MAINE TURNPIKE AUTHORITY

MAINE TURNPIKE

CONTRACT DOCUMENTS

# CONTRACT 2026.23

VARIABLE MESSAGE SIGN REPLACEMENT
VARIOUS LOCATIONS
MILE 6.2 TO MILE 53.4

NOTICE TO CONTRACTORS

PROPOSAL

CONTRACT AGREEMENT

CONTRACT BOND

FINAL LIEN AND CLAIM WAIVER AND AFFIDAVIT

SPECIFICATIONS

# MAINE TURNPIKE AUTHORITY

# SPECIFICATIONS

The Specifications are divided into two parts:
Part I, Supplemental Specifications and Part II, Special Provisions.

The Maine Turnpike Supplemental Specifications are additions and alterations to the 2014 Maine Department of Transportation Standard Specifications. See Subsection 100.1.

TABLE OF CONTENTS


| | PAGE |
|---|---|
| NOTICE TO CONTRACTORS | N-1 |
| PROPOSAL | P-1 |
| CONTRACT AGREEMENT | C-1 |
| CONTRACT BOND | CB-1 |
| FINAL LIEN AND CLAIM WAIVER AND AFFIDAVIT | F-1 |

ARRANGEMENT OF SPECIFICATIONS

| | |
|---|---|
| PART I – SUPPLEMENTAL SPECIFICATIONS | SS-1 |
| PART II - SPECIAL PROVISIONS | SP-1 |

MAINE TURNPIKE AUTHORITY

NOTICE TO CONTRACTORS

Sealed Proposals will be received by the Maine Turnpike Authority for:

CONTRACT 2026.23

VARIABLE MESSAGE SIGN REPLACEMENT
VARIOUS LOCATIONS
MILE 6.2 TO MILE 53.4

at the office of the Maine Turnpike Authority, 2360 Congress Street, Portland, ME, until 11:00 a.m., prevailing time as determined by the Authority on December 15, 2026 at which time and place the Proposals will be publicly opened and read. Bids will be accepted from Contractors **prequalified** by the Maine Department of Transportation for Highway Construction Projects. All other bids may be rejected. This Project includes a wage determination developed by the State of Maine Department of Labor. **We now accept electronic bids for bid packages posted on the Bid Express website. Electronic bids do not have to be accompanied by paper bids. Until further notice, dual bids (one paper, one electronic) will be accepted, with the paper copy taking precedence.**

This work consists of the replacement of Variable Message Signs (VMS), cabinets, and associated electrical and communications equipment at four overhead sign structure locations and five side-mounted sign structure locations. The existing overhead sign structures and walkways at Cider Hill Road (MM 6.20) and Holmes Road (MM 43.00) shall be removed and replaced with new structures and walkways. The existing overhead sign structure at Limerick Road (MM 28.30) shall remain in service, and a new walkway shall be installed. The existing overhead sign structure at Mountain Road (MM 53.40) shall be removed and replaced with the overhead sign structure relocated from Holmes Road. New drilled shaft foundations shall be installed for all replaced and relocated overhead sign structures.

Except at Wells (Sanford Road) Westbound, existing side-mounted sign structures and foundations shall remain in place, and the Contractor shall install the new Variable Message Signs (VMS) on the existing structures. At Wells (Sanford Road) Westbound, the Contractor shall remove the existing side-mounted sign structure from its foundation and reinstall it on a new drilled shaft foundation located outside the clear zone. The Contractor shall install the new VMS on the relocated structure.

All work shall be performed in accordance with the Contract Plans and Specifications. The Contractor shall conduct a site visit prior to submitting a bid to become familiar with existing conditions, the full extent of the work, and temporary access requirements. The Contractor shall provide and maintain traffic control throughout the duration of the work in accordance with the Contract Documents and Specifications.

**The half size Plans** and Contract Documents may be obtained from the Authority upon payment of One Hundred ($100.00) Dollars for each set, which payment will not be returned. Checks shall be made payable to: Maine Turnpike Authority. The Plans and Contract Documents may also be downloaded from a link on our website listed below.**Error! Hyperlink reference not valid.**

For general information regarding Bidding and Contracting procedures, contact Nate Carll, Purchasing Manager, at (207) 482-8115. For information regarding Schedule of Items, plan holders list and bid results, visit our website at the link below. To submit questions, use the electronic Request For Information (RFI) tab at https://www.maineturnpike.com/projects/construction-contracts for Contract 2026.23. Questions shall be submitted by December 9, 2026 at 11:00am. Responses will not be prepared for questions received by telephone. Bidders shall not contact any other Authority staff or Consultants for clarification of Contract provisions, and the Authority will not be responsible for any interpretations so obtained.

All work shall be governed by the Specifications entitled "State of Maine, Department of Transportation, Standard Specifications, Revision of November 2014", "Standard Details, Revision of March 2020" and "Best Management Practices for Erosion and Sediment Control", latest issue. Copies and recent updates to these publications can be downloaded at the following links: https://www.maine.gov/dot/doing-business/bid-opportunities/standards# and https://www.maine.gov/dot/publications/brochures-guides.

Proposals must be accompanied by an original bid bond, certified or cashier's check payable to the Maine Turnpike Authority in an amount not less than Five (5%) Percent of the Total Amount in the Proposal, but not less than $500.00. The Bidder to whom a Contract is awarded will be required to furnish a Surety Corporation Bond, satisfactory to the Authority, on the standard Contract Bond form of the Authority, for a sum not less than the Total Amount of the Proposal.

Proposals must be made upon the Proposal Forms furnished by the Authority separately with the Contract Documents, and must be enclosed in the sealed special addressed envelope provided therefore bearing the name and address of the Bidder, the name of the Contract, and the date and time of Proposal opening on the outside.

A pre-bid conference will be held on December 4, 2026 at 10:00 a.m. at the Maine Turnpike Authority, 2360 Congress Street, Portland, Maine.

The Authority reserves the unqualified right to reject any or all Proposals and to accept that Proposal which in its sole judgment will under all circumstances serve its best interest.

MAINE TURNPIKE AUTHORITY

Nate Carll
Purchasing Manager
Maine Turnpike Authority
Portland, Maine

Maine Turnpike Authority

MAINE TURNPIKE

# PROPOSAL

## CONTRACT 2026.23

## VARIABLE MESSAGE SIGN REPLACEMENT
## VARIOUS LOCATIONS
## MILE 6.2 TO MILE 53.4

MAINE TURNPIKE AUTHORITY

PROPOSAL

CONTRACT 2026.23

VARIABLE MESSAGE SIGN REPLACEMENT
VARIOUS LOCATIONS
MILE 6.2 TO MILE 53.4

TO MAINE TURNPIKE AUTHORITY:

This work consists of the replacement of Variable Message Signs (VMS), cabinets, and associated electrical and communications equipment at four overhead sign structure locations and five side-mounted sign structure locations. The existing overhead sign structures and walkways at Cider Hill Road (MM 6.20) and Holmes Road (MM 43.00) shall be removed and replaced with new structures and walkways. The existing overhead sign structure at Limerick Road (MM 28.30) shall remain in service, and a new walkway shall be installed. The existing overhead sign structure at Mountain Road (MM 53.40) shall be removed and replaced with the overhead sign structure relocated from Holmes Road. New drilled shaft foundations shall be installed for all replaced and relocated overhead sign structures.

Except at Wells (Sanford Road) Westbound, existing side-mounted sign structures and foundations shall remain in place, and the Contractor shall install the new Variable Message Signs (VMS) on the existing structures. At Wells (Sanford Road) Westbound, the Contractor shall remove the existing side-mounted sign structure from its foundation and reinstall it on a new drilled shaft foundation located outside the clear zone. The Contractor shall install the new VMS on the relocated structure.

All work shall be performed in accordance with the Contract Plans and Specifications. The Contractor shall conduct a site visit prior to submitting a bid to become familiar with existing conditions, the full extent of the work, and temporary access requirements. The Contractor shall provide and maintain traffic control throughout the duration of the work in accordance with the Contract Documents and Specifications.

This Work will be done under a Contract known as Contract 2026.23 according to the Plans and Specifications which are on file in the office of the Maine Turnpike Authority, 2360 Congress Street, Portland, Maine.

On the acceptance of this Proposal for said Work, the undersigned will give the required bond with good security conditioned for the faithful performance of said Work, according to said Plans and Specifications, and the doing of all other work required by said Specifications for the consideration herein named and with the further condition that the Maine Turnpike Authority shall be saved harmless from any and all damages that might accrue to any person, persons or property by reason of the carrying out of said Work, or any part thereof, or by reason of negligence of the undersigned, or any person or persons under his employment and engaged in said Work.

# SCHEDULE OF BID PRICES
# CONTRACT NO. 2026.23
# VARIABLE MESSAGE SIGN REPLACEMENT
# VARIOUS LOCATIONS
# (MM 6.20 TO MM 53.40)

| Item No | Item Description | Units | Approx. Quantities | Unit Prices in Numbers | | Bid Amount in Numbers | |
|---|---|---|---|---|---|---|---|
| | | | | Dollars | Cents | Dollars | Cents |
| 202.071 | Removal of Existing Spare Sign Parts | Lump Sum | 1 | | | | |
| 510.131 | Access Way - Cider Hill Road – MM 6.20 | Lump Sum | 1 | | | | |
| 510.132 | Access Way - Limerick Road – MM 28.3 | Lump Sum | 1 | | | | |
| 510.133 | Access Way – Holmes Road - MM 43.0 | Lump Sum | 1 | | | | |
| 526.353 | Median Barrier - Type C (20 LF) | Lump Sum | 1 | | | | |
| 527.341 | Work Zone Crash Cushions - TL-3 | Unit | 2 | | | | |
| 527.343 | Resetting Existing Work Zone Crash Cushion | Unit | 2 | | | | |
| 603.179 | 18 inch Culvert Pipe Option III | Linear Foot | 30 | | | | |
| 603.219 | 36 inch Culvert Pipe Option III | Linear Foot | 32 | | | | |
| 606.356 | Underdrain Delineator Post | Each | 25 | | | | |
| 606.3605 | Guardrail - Remove, Modify and Reset Single Rail | Linear Foot | 600 | | | | |

**CARRIED FORWARD:**

| Item No | Item Description | Units | Approx. Quantities | Unit Prices in Numbers | | Bid Amount in Numbers | |
|---|---|---|---|---|---|---|---|
| | | | | Dollars | Cents | Dollars | Cents |
| | | | **BROUGHT FORWARD:** | | | | |
| 606.3606 | Guardrail - Remove, Modify, and Reset Double Rail | Linear Foot | 300 | | | | |
| 606.3607 | Guardrail - Remove, Modify, and Reset Thrie Beam | Linear Foot | 100 | | | | |
| 606.471 | Single Offset Block - W-Beam | Each | 5 | | | | |
| 606.48 | Single Galvanized Steel Post | Each | 5 | | | | |
| 610.18 | Stone Ditch Protection | Cubic Yard | 28 | | | | |
| 626.121 | Quazite Junction Box (36x24) | Each | 17 | | | | |
| 626.122 | Quazite Junction Box (18x11) | Each | 3 | | | | |
| 626.21 | Metallic Conduit | Linear Foot | 200 | | | | |
| 626.22 | Non-metallic Conduit | Linear Foot | 4,000 | | | | |
| 626.223 | Horizontal Directional Drilled Conduit | Linear Foot | 225 | | | | |
| 626.332 | 30-inch Diameter, greater than 8-feet long, and all 36-inch and 42-inch Diameter foundations | Cubic Yard | 70 | | | | |
| 626.36 | Remove or Modify Concrete Foundation | Each | 7 | | | | |

**CARRIED FORWARD:**

| Item No | Item Description | Units | Approx. Quantities | Unit Prices in Numbers | | Bid Amount in Numbers | |
|---|---|---|---|---|---|---|---|
| | | | | Dollars | Cents | Dollars | Cents |
| | | | **BROUGHT FORWARD:** | | | | |
| 626.38 | Ground Mounted Cabinet Foundation | Each | 9 | | | | |
| 629.05 | Hand Labor, Straight Time | Hour | 10 | | | | |
| 631.10 | Air Compressor (including operator) | Hour | 10 | | | | |
| 631.11 | Air Tool (including operator) | Hour | 10 | | | | |
| 631.12 | All Purpose Excavator (including operator) | Hour | 10 | | | | |
| 631.13 | Bulldozer (including operator) | Hour | 10 | | | | |
| 631.15 | Roller, Earth and Base (including operator) | Hour | 10 | | | | |
| 631.171 | Truck - Small (including operator) | Hour | 10 | | | | |
| 631.172 | Truck - Large (including operator) | Hour | 10 | | | | |
| 631.36 | Foreman | Hour | 10 | | | | |
| 631.51 | Bucket Truck | Hour | 10 | | | | |
| 631.53 | Electrician | Hour | 20 | | | | |

**CARRIED FORWARD:**

| Item No | Item Description | Units | Approx. Quantities | Unit Prices in Numbers | | Bid Amount in Numbers | |
|---|---|---|---|---|---|---|---|
| | | | | Dollars | Cents | Dollars | Cents |
| | | | **BROUGHT FORWARD:** | | | | |
| 631.54 | Electrician's Apprentice | Hour | 20 | | | | |
| 639.19 | Field Office Type B | Each | 1 | | | | |
| 643.92 | Pedestal Pole | Each | 7 | | | | |
| 643.931 | Remove and Replace Wood Pole | Each | 1 | | | | |
| 645.1241 | Replace Overhead Sign Structure and Walkway and Install VMS Cider Hill Road - MM 6.20 | Lump Sum | 1 | | | | |
| 645.1242 | Replace Limerick Road VMS and Install Walkway - MM 28.30 | Lump Sum | 1 | | | | |
| 645.1243 | Replace Overhead Sign Structure and Walkway and Install VMS Holmes Road - MM 43.00 | Lump Sum | 1 | | | | |
| 645.1244 | Removal, Disassembly and Relocation of Overhead Sign Structure and Install VMS and Walkway Mountain Road - MM 53.40 | Lump Sum | 1 | | | | |
| 645.1245 | Replace VMS at Existing Side Mount Butterfly Structures | Each | 5 | | | | |
| 652.361 | Maintenance of Traffic Control Devices | Lump Sum | 1 | | | | |
| 655.801 | Lightning Suppression System – Cider Hill Road MM 6.20 | Lump Sum | 1 | | | | |
| 655.802 | Lightning Suppression System – Limerick Road MM 28.30 | Lump Sum | 1 | | | | |
| | | | **CARRIED FORWARD:** | | | | |

| Item No | Item Description | Units | Approx. Quantities | Unit Prices in Numbers | | Bid Amount in Numbers | |
|---|---|---|---|---|---|---|---|
| | | | | Dollars | Cents | Dollars | Cents |
| | | | **BROUGHT FORWARD:** | | | | |
| 655.803 | Lightning Suppression System – Holmes Road MM 43.0 | Lump Sum | 1 | | | | |
| 655.804 | Lightning Suppression System – Mountain Road MM 53.40 | Lump Sum | 1 | | | | |
| 655.805 | Lightning Suppression System – York – Exit 7 | Lump Sum | 1 | | | | |
| 655.806 | Lightning Suppression System – Wells - Exit 19 Eastbound | Lump Sum | 1 | | | | |
| 655.807 | Lightning Suppression System – Wells - Exit 19 Westbound | Lump Sum | 1 | | | | |
| 655.808 | Lightning Suppression System – Kennebunk – Exit 25 | Lump Sum | 1 | | | | |
| 655.809 | Lightning Suppression System – South Portland – Exit 45 | Lump Sum | 1 | | | | |
| 655.810 | Lighting Suppression System – Falmouth – Exit 53 | Lump Sum | 1 | | | | |
| 655.811 | Lightning Suppression System – Biddeford – Exit 32 | Lump Sum | 1 | | | | |
| 656.751 | Temporary Soil Erosion and Water Pollution Control | Lump Sum | 1 | | | | |
| 659.10 | Mobilization | Lump Sum | 1 | | | | |
| 661.10 | Toll Stipend | Lump Sum | 1 | | | | |

**CARRIED FORWARD:**

| Item No | Item Description | Units | Approx. Quantities | Unit Prices in Numbers | | Bid Amount in Numbers | |
|---|---|---|---|---|---|---|---|
| | | | | Dollars | Cents | Dollars | Cents |
| | | | **BROUGHT FORWARD:** | | | | |
| | | | **TOTAL:** | | | | |

The undersigned hereby declares that he/she has carefully examined the Plans, Specifications and other Contract Documents, and that he/she will contract to carry out and complete the said Work as specified and delineated at the price per unit of measure for each scheduled item of Work stated in the Schedule of Prices as follows:

It is understood that the TOTAL AMOUNT stated by the undersigned in the following Schedule of Prices is based on approximate quantities and will be used solely for the comparison of bids, and that the quantities stated in the Schedule of Prices for the various items are estimates only and may be increased or decreased all as provided in the Specifications.

Acknowledgment is hereby made of the following Addenda received since issuance of the Plans and Specifications: _____

_____

_____

Accompanying this Proposal is an original bid bond, cashiers or certified check on _____ Bank, for _____, payable to the Maine Turnpike Authority. In case this Proposal shall be accepted by the Maine Turnpike Authority and the undersigned should fail to execute a Contract with, and furnish the security required by the Maine Turnpike Authority as set forth in the Specifications, within the time fixed therein, an amount of money equal to Five (5%) Percent of the Total Amount of the Proposal for the Contract awarded to the undersigned, but not less than $500.00, obtained out of the original bid bond, cashier's or certified check, shall become the property of the Maine Turnpike Authority; otherwise the check will be returned to the undersigned.

The performance of said Work under this Contract will be completed during the time specified in Subsection 107.1.

It is agreed that time is of the essence of this Contract and that I (we) will, in the event of my (our) failure to complete the Work within the time limit named above, pay to Maine Turnpike Authority liquidated damages in the amount or amounts stated in the Specifications.

The undersigned is an Individual/Partnership/Corporation under the laws of the State of _____, having principal office at _____, thereunto duly authorized.

_____ *(SEAL)*

_____ *(SEAL)*

*Affix Corporate Seal*
*or Power of Attorney*
*Where Applicable*

_____ *(SEAL)*

By: _____

Its: _____

Information below to be typed or printed where applicable:

INDIVIDUAL:

| | |
|---|---|
| (Name) | (Address) |

PARTNERSHIP - Name and Address of General Partners:

| | |
|---|---|
| (Name) | (Address) |
| (Name) | (Address) |
| (Name) | (Address) |
| (Name) | (Address) |

INCORPORATED COMPANY:

| | |
|---|---|
| (President) | (Address) |
| (Vice-President) | (Address) |
| (Secretary) | (Address) |
| (Treasurer) | (Address) |

MAINE TURNPIKE AUTHORITY

MAINE TURNPIKE

YORK TO AUGUSTA

CONTRACT AGREEMENT

This Agreement made and entered into between the Maine Turnpike Authority, and sometimes termed the "Authority", and _____

_____

herein termed the "Contractor":

WITNESSETH: That the Authority and the Contractor, in consideration of the premises and of the mutual covenants, considerations and agreements herein contained, agree as follows:

FIRST: The parties hereto mutually agree that the documents attached hereto and herein incorporated and made a part hereof collectively evidencing and constituting the entire Contract to the same extent as if herein written in full, are the Notice to Contractors, the Accepted Proposal, the Specifications, the Plans, this Agreement, the Contract Bond and all Addenda to the Contract Documents duly issued and herewith enumerated:

_____

_____

SECOND: The Contractor for and in consideration of certain payments to be made as hereafter specified, hereby covenants and agrees to perform and execute all of the provisions of this Contract and of all documents and parts attached hereto and made a part thereof, and at his own cost and expense to furnish and perform everything necessary and required to construct and complete, ready for its intended purpose, in accordance with the Contract and such instructions as the Engineer may give, acceptable to the Authority, in the times provided, all of the Work covered and included under Contract No. _____ covering _____ as herein described.

THIRD: In consideration of the performance by the Contractor of his covenants and agreements as herein set forth, the Authority hereby covenants and agrees to pay the Contractor according to the Schedule of Prices set forth in the Proposal with additions and deductions as elsewhere herein provided in the times and in the manner stated in the Specifications. This Agreement shall insure to the benefit of, and shall be binding upon the parties hereto, and upon their respective successors and assigns; but neither party hereto shall assign or transfer his interest herein in whole or in part without the consent of the other, except as herein provided.

IN WITNESS WHEREOF the parties to this Agreement have executed the same in quintuplicate.

AUTHORITY -

MAINE TURNPIKE AUTHORITY

By: _____

Title: CHAIRMAN

Date of Signature: _____

ATTEST:

_____
Secretary

CONTRACTOR -

_____
CONTRACTOR

By: _____

Title: _____

Date of Signature: _____

WITNESS:

_____

# CONTRACT BOND

KNOW ALL MEN BY THESE PRESENTS that _____

of _____ in the County of _____ and State of _____

as Principal, and _____ a Corporation duly organized under the

laws of the State of _____ and having a usual place of business in _____

_____

As Surety, are held and firmly bound unto the Maine Turnpike Authority in the sum of _____Dollars ($_____.___), to be paid to said Maine Turnpike Authority, or its successors, for which payment, well and truly to be made, we bind ourselves, our heirs, executors, successors and assigns jointly and severally by these presents.

The condition of this obligation is such that the Principal, designated as Contractor in the foregoing Contract No. _____ shall faithfully perform the Contract on his part and satisfy all claims and demands incurred for the same and shall pay all bills for labor, material, equipment and all other items contracted for, or used by him, in connection with the Work contemplated by said Contract, and shall fully reimburse the Obligee for all outlay and expense which the Obligee may incur in making good any default of said Principal, then this Obligation shall be null and void; otherwise it shall remain in full force and effect.

Signed and sealed this _____ day of _____, A.D., 20___

Witnesses: CONTRACTOR

_____ _____ *(SEAL)*

_____ _____ *(SEAL)*

_____ _____ *(SEAL)*

SURETY

_____ _____ *(SEAL)*

_____ _____ *(SEAL)*

_____ _____ *(SEAL)*

(Surety must attach copy of Power of Attorney showing authority of Office or Agent to execute bonds)

# FINAL LIEN AND CLAIM WAIVER AND AFFIDAVIT

Upon receipt of the sum of _____, which sum represents the total amount paid, including the current payment for work done and materials supplied for Project No. _____, in _____, Maine, under the undersigned's Contract with the Maine Turnpike Authority.

The undersigned, on oath, states that the Final Payment of _____ is the final payment for all work, labor, materials, services and miscellaneous (all of which are hereinafter referred to as "Work Items") supplied to the said Project through _____and that no additional sum is claimed by the undersigned respecting said Project.

The undersigned, on oath, states that all persons and firms who supplied Work Items to the undersigned in connection with said Project have been fully paid by the undersigned for such Work Items or that such payment will be fully effected immediately upon receipt of this payment.

In consideration of the payment herewith made, the undersigned does fully and finally release and hold harmless the Maine Turnpike Authority, and its Surety, if any, from any and all claims, liens or right to claim or lien, arising out of this Project under any applicable bond, law or statute.

It is understood that this Affidavit is submitted to assure the Owner and others that all liens and claims relating to the Work Items furnished by the undersigned are paid.

_____
(Contractor)

By: _____

Title: _____

State of MAINE

County of _____

I, _____, hereby certify on behalf of _____
*(Company Officer)* *(Company Name)*

its _____, being first duly sworn and stated that the foregoing representations are
*(Title)*

are true and correct upon his own knowledge and that the foregoing is his free act and deed in said capacity and the free act and deed of the above-named

_____

.

*(Company Name)*

The above-named, _____, personally appeared before me this ____ day of _____ and swears that this is his free act and deed.

*(SEAL)*

_____
Notary Public

My Commission Expires: _____

# MAINE TURNPIKE AUTHORITY

# SPECIFICATIONS

# PART I – SUPPLEMENTAL SPECIFICATIONS

*(Rev. November 10, 2016)*

https://www.maineturnpike.com/projects/construction-related-documents

# MAINE TURNPIKE AUTHORITY

# SPECIFICATIONS

# PART II – SPECIAL PROVISIONS

PART II - SPECIAL PROVISIONS


| SECTION | TITLE | PAGE |
|---|---|---|
| __ | GENERAL DESCRIPTION OF WORK | SP-1 |
| __ | PLANS | SP-1 |
| 101.2 | DEFINITION | SP-2 |
| 102.6 | BID GUARANTY | SP-2 |
| 102.7 | DELIVERY OF BIDS | SP-3 |
| 102.11 | BID RESPONSIVENESS | SP-3 |
| 103.4 | NOTICE OF AWARD | SP-3 |
| 104.3.8 | WAGE RATES AND LABOR LAWS | SP-4 |
| 104.4.6 | UTILITY COORDINATION | SP-8 |
| 104.4.7 | COOPERATION WITH OTHER CONTRACTORS | SP-11 |
| 105.5.1 | GENERAL REQUIREMENTS | SP-11 |
| 105.8.2 | PERMIT REQUIREMENTS | SP-12 |
| 105.11 | AS-BUILT PLANS | SP-12 |
| 105.11.1 | AS-BUILT PLAN SUBMITTALS | SP-13 |
| 105.11.2 | AS-BUILT PLAN REQUIREMENTS | SP-13 |
| 107.1 | CONTRACT TIME AND CONTRACT COMPLETION DATE | SP-13\ |
| 107.1.1 | SUBSTANTIAL COMPLETION | SP-13 |
| 107.3.2 | NIGHT WORK | SP-14 |
| 107.4.7 | LIMITATIONS OF OPERATIONS | SP-14 |
| 108.2.1 | GENERATION OF PROGRESS PAYMENTS | SP-15 |
| 108.2.3 | MOBILIZATION PAYMENT | SP-15 |
| 108.3 | RETAINAGE | SP-15 |

| SECTION | TITLE | PAGE |
|---|---|---|
| 202. | REMOVING STRUCTURES AND OBSTRUCTIONS<br>(Removal of Existing Spare Sign Parts) | SP-16 |
| 203. | EXCAVATION AND EMBANKMENT | SP-18 |
| 206. | STRUCTURAL EXCAVATION | SP-20 |
| 401 | HOT MIX ASPHALT PAVEMENT | SP-21 |
| 403. | HOT MIX ASPHALT PAVEMENT | SP-47 |
| 403. | HOT MIX ASPHALT PAVEMENT | SP-49 |
| 409. | BITUMINOUS TACK COAT | SP-50 |
| 419. | SAWING AND SEALING JOINTS IN BITUMINOUS PAVEMENT<br>(Sawing Bituminous Pavement) | SP-52 |
| 502 | STRUCUTRAL CONCRETE<br>(Median Concrete Barrier) | SP-53 |
| 510 | STRUCUTRAL CONCRETE<br>(Construction Access Way) | SP-54 |
| 515. | PROTECTIVE COATING FOR CONCRETE SURFACES<br>(Clear Concrete Protective Coating) | SP-58 |
| 526 | CONCRETE BARRIER<br>(Temporary Barrier Makers) | SP-61 |
| 526. | CONCRETE BARRIER<br>(Temporary Concrete Barrier Type I – Supplied by Authority) | SP-63 |
| 526. | CONCRETE BARRIER<br>(Median Barrier – Type C) | SP-66 |
| 527. | ENERGY ABSORBING UNIT<br>(Work Zone Crash Cushion)<br>(Resetting Existing Work Zone Crash Cushions) | SP-70 |
| 606. | GUARDRAIL<br>(Guardrail – Remove, Modify and Reset, Single Rail)<br>(Guardrail – Remove, Modify and Reset, Double Rail)<br>(Guardrail – Remove, Modify and Reset, Thrie Beam)<br>(Guardrail - Remove and Stack)<br>(Guardrail Adjust – Single Rail)<br>(Guardrail – Double Rail) | SP-72 |

| SECTION | TITLE | PAGE |
|---|---|---|
| 606. | GUARDRAIL<br>(Single Offset Block – W-Beam)<br>(Single Offset Block - Thrie-Beam)<br>(Asymmetrical Thrie Beam Transition) | SP-76 |
| 613 | EROSION CONTROL BLANKET | SP-78 |
| 619. | MULCH<br>(Mulch – Plan Quantity)<br>(Temporary Mulch) | SP-79 |
| 626. | FOUNDATIONS, CONDUIT, AND JUNCTION BOXES FOR HIGHWAY SIGNING, LIGHTING AND SIGNALS<br>(Horizontal Directional Drilled Conduit) | SP-80 |
| 626. | FOUNDATIONS, CONDUIT, AND JUNCTION BOXES FOR HIGHWAY SIGNING, LIGHTING AND SIGNALS | SP-83 |
| 626. | FOUNDATIONS, CONDUIT, AND JUNCTION BOXES FOR HIGHWAY SIGNING, LIGHTING AND SIGNALS<br>(Quazite Junction Box) | SP-85 |
| 631. | EQUIPMENT RENTAL | SP-88 |
| 643. | TRAFFIC SIGNALS<br>(Wood Poles) | SP-89 |
| 643. | TRAFFIC SIGNALS<br>(Meter Pedestal) | SP-91 |
| 645. | HIGHWAY SIGNING<br>(Replace Limerick Road VMS and Install Walkway – MM 28.30 | SP-92 |
| 645. | HIGHWAY SIGNING<br>(Removal, Disassembly and Relocation of Overhead Sign Structure and Install VMS and Walkway - Mountain Road – MM 53.40) | SP-98 |
| 645. | HIGHWAY SIGNING<br>(Replace Overhead Sign Structure and Walkway and Install VMS Cider Hill Road – MM 6.20 & Holmes Road – MM 43.00) | SP-104 |
| 645. | HIGHWAY SIGNING<br>(Replace VMS at Existing Side Mount Butterfly Structures) | SP-112 |
| 645. | HIGHWAY SIGNING<br>(Install MTA Provided Variable Message Signs) | SP-117 |

| SECTION | TITLE | PAGE |
|---|---|---|
| 652. | MAINTENANCE OF TRAFFIC | SP-123 |
| 652. | MAINTENANCE OF TRAFFIC<br>(Specific Project Maintenance of Traffic Requirements) | SP-151 |
| 655 | ELECTRICAL<br>(AWG Wire) | SP-156 |
| 655 | ELECTRICAL<br>(Category 6A Cable) | SP-158 |
| 655 | ELECTRICAL<br>(Fiber Optic Cable) | SP-159 |
| 655 | ELECTRICAL<br>(Lightning Suppression System) | SP-162 |
| 656 | TEMPORARY SOIL EROSION AND WATER POLLUTION CONTROL | SP-165 |
| 661. | TOLL STIPEND | SP-166 |
| 719. | SIGNING MATERIAL | SP-167 |
| | APPENDIX A<br>(Daktronics Shop Drawings) | SP-169 |

# MAINE TURNPIKE AUTHORITY

## SPECIFICATIONS

## PART II - SPECIAL PROVISIONS

All work shall be governed by the Maine Department of Transportation Standard Specifications, Revision of November 2014, except for that work which applies to sections of the Maine Department of Transportation Standard Specifications which are amended by the Maine Turnpike Supplemental Specifications and the following modifications, additions and deletions.

### General Description of Work

This work consists of the replacement of Variable Message Signs (VMS), cabinets, and associated electrical and communications equipment at four overhead sign structure locations and five side-mounted sign structure locations. The existing overhead sign structures and walkways at Cider Hill Road (MM 6.20) and Holmes Road (MM 43.00) shall be removed and replaced with new structures and walkways. The existing overhead sign structure at Limerick Road (MM 28.30) shall remain in service, and a new walkway shall be installed. The existing overhead sign structure at Mountain Road (MM 53.40) shall be removed and replaced with the overhead sign structure relocated from Holmes Road. New drilled shaft foundations shall be installed for all replaced and relocated overhead sign structures.

Except at Wells (Sanford Road) Westbound, existing side-mounted sign structures and foundations shall remain in place, and the Contractor shall install the new Variable Message Signs (VMS) on the existing structures. At Wells (Sanford Road) Westbound, the Contractor shall remove the existing side-mounted sign structure from its foundation and reinstall it on a new drilled shaft foundation located outside the clear zone. The Contractor shall install the new VMS on the relocated structure.

All work shall be performed in accordance with the Contract Plans and Specifications. The Contractor shall conduct a site visit prior to submitting a bid to become familiar with existing conditions, the full extent of the work, and temporary access requirements. The Contractor shall provide and maintain traffic control throughout the duration of the work in accordance with the Contract Documents and Specifications.

The Contractor shall conduct a site visit prior to submitting a bid to become familiar with existing conditions, the full extent of the work, and temporary access requirements. The Contractor shall provide and maintain traffic control throughout the duration of the work in accordance with the Contract Documents and Specifications.

### Plans

The drawings included in these Contract Documents, and referred to as the Plans, show the general character of the work to be done under this Contract. They bear the general title “Maine Turnpike – Contract 2026.23 – Variable Message Sign Replacement – Various Locations – MM 6.20 to MM 53.4”. The right is reserved by the Resident to make such minor corrections or

alterations in the Plans as he deems necessary without change in the unit prices on the Schedule of Prices of the Proposal.

101.2 Definition

Holidays

The following is added after Memorial Day in the Supplemental Specifications:

| | |
|---|---|
| Christmas Day 2026 | 12:01 p.m. preceding Thursday to 6:00 a.m. the following Tuesday |
| New Year's Day 2027 | 12:01 p.m. preceding Thursday to 6:00 a.m. the following Monday |
| Patriots Day 2027 (April 19th) | 12:01 p.m. preceding Friday to 6:00 a.m. the following Tuesday. |
| Juneteenth 2027 (June 19th) | 12:01 p.m. preceding Thursday to 6:00 a.m. the following Monday. |
| Independence Day 2027 (Fourth of July) | 12:01 p.m. preceding Friday to 6:00 a.m. the following Tuesday. |
| Indigenous Peoples Day 2027 (October 11th) | 12:01 p.m. preceding Friday to 6:00 a.m. the following Tuesday. |

102.6 Bid Guaranty

In the Supplemental Specifications, replace the last paragraph with the following two paragraphs:

Bid Bonds must be: (A) issued by an insurance company licensed or approved by the State of Maine, Department of Business Regulation, Bureau of Insurance, to do business in the State of Maine; and (B) properly signed by the bidder (as Principal) and a duly authorized representative of the insurance company referenced above.

Bid Bonds for electronic Bids must be delivered or received before the Bid Opening time. Electronic Bid Bonds that accompany electronic Bids are acceptable.

102.7 Delivery of Bids

In the Supplemental Specifications, add the following paragraph to Section 102.7.1 Location and Time:

Electronic Bids must be submitted to the appropriate electronic bid system before the precise time (as determined by the Authority) specified in the Notice to Contractors or any applicable Bid Amendment.

102.11 Bid Responsiveness

In the Supplemental Specifications, replace bullet C of Section 102.11.1 Non-curable Bid Defects with the following:

C. The Bid is not signed by a duly authorized representative of the Bidder.
    1) Properly submitted electronic bids meet this requirement.
    2) Paper bids must include at least one signed copy of the Contract Agreement Offer & Award form.

103.4 Notice of Award

The following sentence is added:

The Maine Turnpike Authority Board is scheduled to consider the Contract Award on December 17, 2026.

104.3.8 Wage Rates and Labor Laws

Section 104.3.8 Wage Rates and Labor Laws has been amended as follows:

The fair minimum hourly rates determined by the State of Maine Department of Labor for this Contract are as follows:

**THIS DOCUMENT MUST BE CLEARLY POSTED AT ALL CONSTRUCTION SITES FUNDED IN PART WITH STATE FUNDS**

**State of Maine**
**Department of Labor**
**Bureau of Labor Standards**
**Augusta, Maine 04333-0045**
**Telephone (207) 623-7906**

**Wage Determination - In accordance with 26 MRS §1301 et. seq., this is a determination by the Bureau of Labor Standards, of the fair minimum wage rate to be paid to laborers and workers employed on the below titled project.**

## 2026 Fair Minimum Wage Rates – Highway & Earth Cumberland County

| Occupational Title | Minimum Wage | Minimum Benefit | Total |
|---|---|---|---|
| Brickmasons and Blockmasons | $43.02 | $7.64 | $50.66 |
| Bulldozer Operator | $30.62 | $5.38 | $36.00 |
| Carpenter | $33.75 | $3.55 | $37.30 |
| Cement Masons and Concrete Finisher | $24.42 | $2.52 | $26.94 |
| Construction and Maintenance Painters | $33.00 | $0.00 | $33.00 |
| Construction Laborer | $26.57 | $3.61 | $30.18 |
| Conveyor Operators and Tenders | $30.17 | $13.77 | $43.94 |
| Crane and Tower Operators | $40.43 | $8.63 | $49.06 |
| Crushing Grinding and Polishing Machine Operators | $29.40 | $5.64 | $35.04 |
| Earth Drillers - Except Oil and Gas | $25.04 | $3.77 | $28.81 |
| Electrical Power - Line Installer and Repairers | $48.12 | $15.63 | $63.75 |
| Electricians | $37.80 | $18.82 | $56.62 |
| Elevator Installers and Repairers | $67.34 | $39.76 | $107.10 |
| Excavator Operator | $33.71 | $6.43 | $40.14 |
| Fence Erectors | $30.90 | $2.18 | $33.08 |
| Flaggers | $22.00 | $1.06 | $23.06 |
| Floor Layers - Except Carpet/Wood/Hard Tiles | $29.00 | $8.65 | $37.65 |
| Glaziers | $39.32 | $19.22 | $58.54 |
| Hazardous Materials Removal Workers | $24.12 | $1.60 | $25.72 |
| Heating and Air Conditioning and Refrigeration Mechanics and Installers | $35.68 | $5.93 | $41.61 |
| Heavy and Tractor - Trailer Truck Drivers | $35.95 | $3.09 | $39.04 |
| Highway Maintenance Workers | $23.30 | $1.14 | $24.44 |
| Industrial Machinery Mechanics | $29.97 | $6.74 | $36.71 |
| Industrial Truck and Tractor Operators | $24.61 | $4.21 | $28.82 |
| Insulation Worker - Mechanical | $27.35 | $6.05 | $33.40 |
| Light Truck or Delivery Services Drivers | $26.79 | $5.14 | $31.93 |
| Loading Machine and Dragline Operators | $30.11 | $5.48 | $35.59 |
| Millwrights | $35.99 | $10.52 | $46.51 |
| Mobile Heavy Equipment Mechanics - Except Engines | $32.76 | $7.19 | $39.95 |
| Operating Engineers and Other Equipment Operators | $39.18 | $3.39 | $42.57 |
| Paving Surfacing and Tamping Equipment Operators | $33.60 | $5.05 | $38.65 |
| Pile-Driver Operators | $37.15 | $3.12 | $40.27 |
| Pipe/Steam/Sprinkler Fitter | $32.33 | $7.56 | $39.89 |
| Pipelayers | $28.75 | $3.64 | $32.39 |
| Plumbers | $34.11 | $7.80 | $41.91 |
| Radio Cellular and Tower Equipment Installers | $34.72 | $5.63 | $40.35 |
| Reinforcing Iron and Rebar Workers | $32.94 | $20.82 | $53.76 |
| Riggers | $31.25 | $7.68 | $38.93 |
| Roofers | $25.50 | $3.49 | $28.99 |
| Sheet Metal Workers | $28.77 | $7.00 | $35.77 |
| Structural Iron and Steel Workers | $30.98 | $7.12 | $38.10 |
| Tapers | $29.16 | $5.64 | $34.80 |
| Telecommunications Equipment Installers and Repairers - Except Line Installers | $37.09 | $10.21 | $47.30 |
| Telecommunications Line Installers and Repairers | $28.49 | $5.29 | $33.78 |
| Tile and Marble Setters | $28.91 | $5.46 | $34.37 |

**Welders are classified as the trade to which welding is incidental (e.g. welding structural steel is Structural Iron and Steel Worker)**

**Apprentices – The minimum wage rates for registered apprentices are the rates recognized in the sponsorship agreement for registered apprentices working in the pertinent classification.**

**For any other specific trade on this project not listed above, contact the Bureau of Labor Standards for further clarification.**

**Title 26 §1310 requires that a clearly legible statement of all fair minimum wage and benefits rates to be paid the several classes of laborers, workers and mechanics employed on the construction on the public work must be kept posted in a prominent and easily accessible place at the site by each contractor and subcontractor subject to sections 1304 to 1313.**

**Appeal – Any person affected by the determination of these rates may appeal to the Commissioner of Labor by filing a written notice with the Commissioner stating the specific grounds of the objection within ten (10) days from the filing of these rates.**

**A true copy**

**Attest:** Scott R. Cotnoir
**Scott R. Cotnoir**
**Wage & Hour Director**
**Bureau of Labor Standards**

**Supersedes 01-01-2025**
**Effective 01-10-2026**

**THIS DOCUMENT MUST BE CLEARLY POSTED AT ALL CONSTRUCTION SITES FUNDED IN PART WITH STATE FUNDS**

**State of Maine**
**Department of Labor**
**Bureau of Labor Standards**
**Augusta, Maine 04333-0045**
**Telephone (207) 623-7906**

**Wage Determination - In accordance with 26 MRS §1301 et. seq., this is a determination by the Bureau of Labor Standards, of the fair minimum wage rate to be paid to laborers and workers employed on the below titled project.**

## 2026 Fair Minimum Wage Rates – Highway & Earth York County

| Occupational Title | Minimum Wage | Minimum Benefit | Total |
|---|---|---|---|
| Brickmasons and Blockmasons | $43.02 | $7.64 | $50.66 |
| Bulldozer Operator | $30.62 | $5.38 | $36.00 |
| Carpenter | $33.75 | $3.55 | $37.30 |
| Cement Masons and Concrete Finisher | $24.42 | $2.52 | $26.94 |
| Construction and Maintenance Painters | $33.00 | $0.00 | $33.00 |
| Construction Laborer | $26.57 | $3.61 | $30.18 |
| Conveyor Operators and Tenders | $30.17 | $13.77 | $43.94 |
| Crane and Tower Operators | $40.43 | $8.63 | $49.06 |
| Crushing Grinding and Polishing Machine Operators | $29.40 | $5.64 | $35.04 |
| Earth Drillers - Except Oil and Gas | $25.04 | $3.77 | $28.81 |
| Electrical Power - Line Installer and Repairers | $48.12 | $15.63 | $63.75 |
| Electricians | $37.80 | $18.82 | $56.62 |
| Elevator Installers and Repairers | $67.34 | $39.76 | $107.10 |
| Excavator Operator | $33.71 | $6.43 | $40.14 |
| Fence Erectors | $30.90 | $2.18 | $33.08 |
| Flaggers | $22.00 | $1.06 | $23.06 |
| Floor Layers - Except Carpet/Wood/Hard Tiles | $29.00 | $8.65 | $37.65 |
| Glaziers | $39.32 | $19.22 | $58.54 |
| Hazardous Materials Removal Workers | $24.12 | $1.60 | $25.72 |
| Heating and Air Conditioning and Refrigeration Mechanics and Installers | $35.68 | $5.93 | $41.61 |
| Heavy and Tractor - Trailer Truck Drivers | $35.95 | $3.09 | $39.04 |
| Highway Maintenance Workers | $22.31 | $2.59 | $24.91 |
| Industrial Machinery Mechanics | $29.97 | $6.74 | $36.71 |
| Industrial Truck and Tractor Operators | $24.61 | $4.21 | $28.82 |
| Insulation Worker - Mechanical | $27.35 | $6.05 | $33.40 |
| Light Truck or Delivery Services Drivers | $26.79 | $5.14 | $31.93 |
| Loading Machine and Dragline Operators | $30.11 | $5.48 | $35.59 |
| Millwrights | $35.99 | $10.52 | $46.51 |
| Mobile Heavy Equipment Mechanics - Except Engines | $32.76 | $7.19 | $39.95 |
| Operating Engineers and Other Equipment Operators | $39.18 | $3.39 | $42.57 |
| Paving Surfacing and Tamping Equipment Operators | $33.60 | $5.05 | $38.65 |
| Pile-Driver Operators | $37.15 | $3.12 | $40.27 |
| Pipe/Steam/Sprinkler Fitter | $32.33 | $7.56 | $39.89 |
| Pipelayers | $28.75 | $3.64 | $32.39 |
| Plumbers | $34.11 | $7.80 | $41.91 |
| Radio Cellular and Tower Equipment Installers | $34.72 | $5.63 | $40.35 |
| Reinforcing Iron and Rebar Workers | $32.94 | $20.82 | $53.76 |
| Riggers | $31.25 | $7.68 | $38.93 |
| Roofers | $25.50 | $3.49 | $28.99 |
| Sheet Metal Workers | $28.77 | $7.00 | $35.77 |
| Structural Iron and Steel Workers | $30.98 | $7.12 | $38.10 |
| Tapers | $29.16 | $5.64 | $34.80 |
| Telecommunications Equipment Installers and Repairers - Except Line Installers | $37.09 | $10.21 | $47.30 |
| Telecommunications Line Installers and Repairers | $28.49 | $5.29 | $33.78 |
| Tile and Marble Setters | $28.91 | $5.46 | $34.37 |

**Welders are classified as the trade to which welding is incidental (e.g. welding structural steel is Structural Iron and Steel Worker)**

**Apprentices – The minimum wage rates for registered apprentices are the rates recognized in the sponsorship agreement for registered apprentices working in the pertinent classification.**

**For any other specific trade on this project not listed above, contact the Bureau of Labor Standards for further clarification.**

**Title 26 §1310 requires that a clearly legible statement of all fair minimum wage and benefits rates to be paid the several classes of laborers, workers and mechanics employed on the construction on the public work must be kept posted in a prominent and easily accessible place at the site by each contractor and subcontractor subject to sections 1304 to 1313.**

**Appeal – Any person affected by the determination of these rates may appeal to the Commissioner of Labor by filing a written notice with the Commissioner stating the specific grounds of the objection within ten (10) days from the filing of these rates.**

**A true copy**

**Attest:** Scott R. Cotnoir
**Scott R. Cotnoir**
**Wage & Hour Director**
**Bureau of Labor Standards**

**Supersedes 01-01-2025**
**Effective 01-10-2026**

**THIS DOCUMENT MUST BE CLEARLY POSTED AT ALL CONSTRUCTION SITES FUNDED IN PART WITH STATE FUNDS**

**State of Maine**
**Department of Labor**
**Bureau of Labor Standards**
**Augusta, Maine 04333-0045**
**Telephone (207) 623-7906**

**Wage Determination - In accordance with 26 MRS §1301 et. seq., this is a determination by the Bureau of Labor Standards, of the fair minimum wage rate to be paid to laborers and workers employed on the below titled project.**

## 2026 Fair Minimum Wage Rates – Heavy & Bridge Cumberland County

| Occupational Title | Minimum Wage | Minimum Benefit | Total |
|---|---|---|---|
| Brickmasons and Blockmasons | $43.02 | $7.64 | $50.66 |
| Bulldozer Operator | $30.62 | $5.38 | $36.00 |
| Carpenter | $30.82 | $10.11 | $40.93 |
| Cement Masons and Concrete Finisher | $24.35 | $15.65 | $40.00 |
| Construction and Maintenance Painters | $38.26 | $22.22 | $60.48 |
| Construction Laborer | $27.60 | $3.73 | $31.33 |
| Conveyor Operators and Tenders | $30.17 | $13.77 | $43.94 |
| Crane and Tower Operators | $47.47 | $4.40 | $51.87 |
| Crushing Grinding and Polishing Machine Operators | $26.15 | $3.24 | $29.39 |
| Earth Drillers - Except Oil and Gas | $25.04 | $3.77 | $28.81 |
| Electrical Power - Line Installer and Repairers | $57.50 | $28.00 | $85.50 |
| Electricians | $42.13 | $14.40 | $56.53 |
| Elevator Installers and Repairers | $67.34 | $39.76 | $107.10 |
| Excavator Operator | $38.75 | $4.88 | $43.63 |
| Fence Erectors | $30.90 | $2.18 | $33.08 |
| Flaggers | $21.39 | $0.86 | $22.25 |
| Floor Layers - Except Carpet/Wood/Hard Tiles | $29.00 | $8.65 | $37.65 |
| Glaziers | $39.32 | $19.22 | $58.54 |
| Hazardous Materials Removal Workers | $24.12 | $1.60 | $25.72 |
| Heating and Air Conditioning and Refrigeration Mechanics and Installers | $35.68 | $5.93 | $41.61 |
| Heavy and Tractor - Trailer Truck Drivers | $30.97 | $3.20 | $34.17 |
| Highway Maintenance Workers | $23.30 | $1.14 | $24.44 |
| Industrial Machinery Mechanics | $29.97 | $6.74 | $36.71 |
| Industrial Truck and Tractor Operators | $24.61 | $4.21 | $28.82 |
| Insulation Worker - Mechanical | $27.35 | $6.05 | $33.40 |
| Light Truck or Delivery Services Drivers | $26.79 | $5.14 | $31.93 |
| Loading Machine and Dragline Operators | $35.50 | $4.59 | $40.09 |
| Millwrights | $35.99 | $10.52 | $46.51 |
| Mobile Heavy Equipment Mechanics - Except Engines | $39.05 | $3.44 | $42.49 |
| Operating Engineers and Other Equipment Operators | $36.50 | $9.16 | $45.66 |
| Paving Surfacing and Tamping Equipment Operators | $30.74 | $10.67 | $41.41 |
| Pile-Driver Operators | $37.26 | $2.98 | $40.24 |
| Pipe/Steam/Sprinkler Fitter | $32.33 | $7.56 | $39.89 |
| Pipelayers | $28.75 | $3.64 | $32.39 |
| Plumbers | $34.11 | $7.80 | $41.91 |
| Radio Cellular and Tower Equipment Installers | $31.98 | $6.42 | $38.40 |
| Reinforcing Iron and Rebar Workers | $32.94 | $25.00 | $57.94 |
| Riggers | $31.25 | $7.68 | $38.93 |
| Roofers | $25.50 | $3.49 | $28.99 |
| Sheet Metal Workers | $28.77 | $7.00 | $35.77 |
| Structural Iron and Steel Workers | $26.78 | $17.08 | $43.85 |
| Tapers | $29.16 | $5.64 | $34.80 |
| Telecommunications Equipment Installers and Repairers - Except Line Installers | $37.09 | $10.21 | $47.30 |
| Telecommunications Line Installers and Repairers | $29.54 | $5.57 | $35.11 |
| Tile and Marble Setters | $28.91 | $5.46 | $34.37 |

**Welders are classified as the trade to which welding is incidental (e.g. welding structural steel is Structural Iron and Steel Worker)**

**Apprentices – The minimum wage rates for registered apprentices are the rates recognized in the sponsorship agreement for registered apprentices working in the pertinent classification.**

**For any other specific trade on this project not listed above, contact the Bureau of Labor Standards for further clarification.**

**Title 26 §1310 requires that a clearly legible statement of all fair minimum wage and benefits rates to be paid the several classes of laborers, workers and mechanics employed on the construction on the public work must be kept posted in a prominent and easily accessible place at the site by each contractor and subcontractor subject to sections 1304 to 1313.**

**Appeal – Any person affected by the determination of these rates may appeal to the Commissioner of Labor by filing a written notice with the Commissioner stating the specific grounds of the objection within ten (10) days from the filing of these rates.**

**A true copy**

**Attest:** Scott R. Cotnoir
**Scott R. Cotnoir**
**Wage & Hour Director**
**Bureau of Labor Standards**

**Supersedes 02-03-2025**
**Effective 01-10-2026**

**THIS DOCUMENT MUST BE CLEARLY POSTED AT ALL CONSTRUCTION SITES FUNDED IN PART WITH STATE FUNDS**

**State of Maine**
**Department of Labor**
**Bureau of Labor Standards**
**Augusta, Maine 04333-0045**
**Telephone (207) 623-7906**

**Wage Determination - In accordance with 26 MRS §1301 et. seq., this is a determination by the Bureau of Labor Standards, of the fair minimum wage rate to be paid to laborers and workers employed on the below titled project.**

## 2026 Fair Minimum Wage Rates – Heavy & Bridge York County

| Occupational Title | Minimum Wage | Minimum Benefit | Total |
|---|---|---|---|
| Brickmasons and Blockmasons | $43.02 | $7.64 | $50.66 |
| Bulldozer Operator | $30.62 | $5.38 | $36.00 |
| Carpenter | $30.82 | $10.11 | $40.93 |
| Cement Masons and Concrete Finisher | $21.53 | $14.51 | $36.04 |
| Construction and Maintenance Painters | $39.53 | $22.24 | $61.77 |
| Construction Laborer | $27.60 | $3.73 | $31.33 |
| Conveyor Operators and Tenders | $30.17 | $13.77 | $43.94 |
| Crane and Tower Operators | $47.47 | $4.40 | $51.87 |
| Crushing Grinding and Polishing Machine Operators | $26.15 | $3.24 | $29.39 |
| Earth Drillers - Except Oil and Gas | $25.04 | $3.77 | $28.81 |
| Electrical Power - Line Installer and Repairers | $57.50 | $28.00 | $85.50 |
| Electricians | $42.13 | $14.40 | $56.53 |
| Elevator Installers and Repairers | $67.34 | $39.76 | $107.10 |
| Excavator Operator | $38.75 | $4.88 | $43.63 |
| Fence Erectors | $30.90 | $2.18 | $33.08 |
| Flaggers | $21.39 | $0.86 | $22.25 |
| Floor Layers - Except Carpet/Wood/Hard Tiles | $29.00 | $8.65 | $37.65 |
| Glaziers | $39.32 | $19.22 | $58.54 |
| Hazardous Materials Removal Workers | $24.12 | $1.60 | $25.72 |
| Heating and Air Conditioning and Refrigeration Mechanics and Installers | $35.68 | $5.93 | $41.61 |
| Heavy and Tractor - Trailer Truck Drivers | $30.97 | $3.20 | $34.17 |
| Highway Maintenance Workers | $23.30 | $1.14 | $24.44 |
| Industrial Machinery Mechanics | $29.97 | $6.74 | $36.71 |
| Industrial Truck and Tractor Operators | $24.61 | $4.21 | $28.82 |
| Insulation Worker - Mechanical | $27.35 | $6.05 | $33.40 |
| Light Truck or Delivery Services Drivers | $26.79 | $5.14 | $31.93 |
| Loading Machine and Dragline Operators | $35.50 | $4.59 | $40.09 |
| Millwrights | $35.99 | $10.52 | $46.51 |
| Mobile Heavy Equipment Mechanics - Except Engines | $39.05 | $3.44 | $42.49 |
| Operating Engineers and Other Equipment Operators | $36.50 | $9.16 | $45.66 |
| Paving Surfacing and Tamping Equipment Operators | $30.74 | $10.67 | $41.41 |
| Pile-Driver Operators | $37.26 | $2.98 | $40.24 |
| Pipe/Steam/Sprinkler Fitter | $32.33 | $7.56 | $39.89 |
| Pipelayers | $28.75 | $3.64 | $32.39 |
| Plumbers | $34.11 | $7.80 | $41.91 |
| Radio Cellular and Tower Equipment Installers | $31.98 | $6.42 | $38.40 |
| Reinforcing Iron and Rebar Workers | $32.94 | $25.00 | $57.94 |
| Riggers | $31.25 | $7.68 | $38.93 |
| Roofers | $25.50 | $3.49 | $28.99 |
| Sheet Metal Workers | $28.77 | $7.00 | $35.77 |
| Structural Iron and Steel Workers | $32.94 | $25.00 | $57.94 |
| Tapers | $29.16 | $5.64 | $34.80 |
| Telecommunications Equipment Installers and Repairers - Except Line Installers | $37.09 | $10.21 | $47.30 |
| Telecommunications Line Installers and Repairers | $29.54 | $5.57 | $35.11 |
| Tile and Marble Setters | $28.91 | $5.46 | $34.37 |

**Welders are classified as the trade to which welding is incidental (e.g. welding structural steel is Structural Iron and Steel Worker)**

**Apprentices – The minimum wage rates for registered apprentices are the rates recognized in the sponsorship agreement for registered apprentices working in the pertinent classification.**

**For any other specific trade on this project not listed above, contact the Bureau of Labor Standards for further clarification.**

**Title 26 §1310 requires that a clearly legible statement of all fair minimum wage and benefits rates to be paid the several classes of laborers, workers and mechanics employed on the construction on the public work must be kept posted in a prominent and easily accessible place at the site by each contractor and subcontractor subject to sections 1304 to 1313.**

**Appeal – Any person affected by the determination of these rates may appeal to the Commissioner of Labor by filing a written notice with the Commissioner stating the specific grounds of the objection within ten (10) days from the filing of these rates.**

**A true copy**

**Attest:** Scott R. Cotnoir
**Scott R. Cotnoir**
**Wage & Hour Director**
**Bureau of Labor Standards**

**Supersedes 02-03-2025**
**Effective 01-10-2026**

104.4.6 Utility Coordination

This Subsection is amended by the addition of the following:

These Special Provisions outline the arrangements which have been established by the Authority for coordination of the work to be accomplished by the utilities. The scope and schedule of utility relocation work is noted herein. The Contractor shall plan and conduct his work accordingly.

General

Utility working days are Monday through Friday, conditions permitting. Times are estimated on the basis of a single crew for each utility. Any times and dates mentioned are estimates only and are dependent upon favorable weather, working conditions, and freedom from emergencies. The Contractor shall have no claim against the Authority if they are exceeded.

The Contractor shall plan and conduct his operations in accordance with the following utility schedule. The Contractor must comply with all OSHA regulations pertaining to work adjacent to utility wires. The Contractor shall plan and conduct his work accordingly.

A. Pre-construction Utility Meeting Contractor shall coordinate a pre-construction utility meeting with affected utilities. Meeting shall include MTA Director of ITS and Resident.

B. Utilities Within Right-of-Way: Except as provided otherwise in the Contract including but not limited to subsection E - Temporary Relocations below, all Utility Facilities of all Utility Companies within the Right-of-Way will be relocated and adjusted as provided in the Contract by and at the expense of the affected Utility Company, provided, however, that the Contractor is responsible for scheduling its Work in accordance with the time allowed for utility relocation as provided in the Contract. Utility relocation Work may not proceed without authorization from the Department.

C. Contractor's Responsibilities

1. Utility Coordination –The Contractor has primary responsibility for coordinating its work with utilities after contract award. The Contractor shall communicate directly with the utilities regarding any utility work necessary to maintain the Contractor's schedule and prevent project construction delays. The Contractor shall notify the Resident of any issues. The Contractor shall plan and conduct its work accordingly.

2. The Contractor must exercise every reasonable precaution to prevent damage to Utility Facilities or interruption to utility services known to or discovered by the Contractor, whether or not shown on the Plans. Such precautions must include notice to Utility Companies before undertaking Work that could damage Utility Facilities. The Contractor must provide each Utility Company with notice at least three Business Days before the date a Utility Company will have to support any pole.

3. The Contractor must take all reasonable precautions to determine the presence of underground Utility Facilities before commencing any excavation Work and must provide all affected Utility Companies with at least 72-hour prior notice of the proposed excavation. The Contractor must comply with 23 MRSA § 3360-A, entitled "Protection of Underground Facilities," Maine's "Dig Safe" statute, and also contact the non-member underground facility operators in the Maine Public Utilities Commission's **"OK-TO-DIG"** directory.

4. **The contractor shall notify the Resident 10 calendar days prior to submitting a utility locate request through Dig Safe so that the Resident can arrange for Maine Turnpike underground utility location. All proposed sign locations and excavation shall be marked at the notification time.**

5. The Contractor must maintain initial markings (spray paint, stakes, etc.) made by the authorized representative of a Utility Company to indicate the location of underground Utility Facilities and otherwise comply with 23 MRSA § 3360-A(4).

6. The Contractor must cooperate with Utility Companies in its relocation or operations so that these operations proceed in a logical sequence, minimize duplication of Work, and avoid unnecessary interruptions to utility service.

7. If utility services are interrupted as a result of the Contractor's Work, the Contractor must promptly notify the appropriate Utility Company and must cooperate fully in the restoration of service. If service is interrupted, repair Work will be continuous until the service is restored. No Work can be undertaken around fire hydrants until the local fire authority has approved provisions for continued services.

8. The Contractor must schedule its Work so as to provide for all Utility Company Work and to complete the Work within the Contract Time. The estimated number of workdays required by each Utility Company to perform its relocation Work contained in the Contract is provided by the Utility Companies and are estimates only. Such Utility Facility relocation times assume normal Working times (Monday through Friday, 8 hours per day), and are dependent upon normal weather, normal Working conditions, and freedom from emergencies. The Authority is not responsible for the accuracy of these estimates. If a Utility Company fails to perform its Work within the time frames set forth in the Contract or in the minutes of the Pre-construction Utility Meeting, and such failure affects the Contractor's Critical Path, the Contractor may request a suspension of Work pursuant to Section 107.5.2 and such Delay will be analyzed in accordance with Section 109.5 - Adjustments for Delay.

9. Any clearing and tree removal that is a part of the Contract and that must be done in areas where Utility Companies are involved must be completed by the Contractor before the Utility Company can relocate its Utility Facilities. Any clearing, cutting of single trees, or limbing required for the temporary or permanent Utility Facility location must be approved by the Authority. The Contractor must provide the Authority with prior notice of at least 4 Days before removing or trimming any trees

or other vegetation.

10. If blasting occurs on the Project, the Contractor must provide each Utility Company having Utility Facilities that could be damaged by the blast with at least 24-hour prior notice that includes the anticipated time of the initial blast.

11. If the Contractor observes a Utility Company Working within the Project Limits in a manner that (A) violates the MUTCD, the Contractor's Traffic Control Plan, or an applicable OSHA requirement or commonly accepted safety practices, and (B) represents a clear and immediate risk of significant bodily injury to any person within the Project Limits, then the Contractor must notify the Resident and the Utility Company immediately.

12. The Contractor agrees to indemnify, defend, and hold harmless the Authority from and against any and all claims or causes of action arising from any act or omission of the Contractor, the Subcontractors or their respective agents, representatives, or employees for failure to comply with this Section. This clause is not meant to limit in any way the Contractor's general indemnification obligations under this Contract.

D. Cost The cost of all Work related to utility coordination is Incidental to the Contract.

The following utilities are located within the Project limits. The Contractor shall ascertain the location of the existing utilities and any other necessary information by direct inquiry at the office of the following utility owners:

**AERIAL AND UNDERGROUND UTILITIES**

ELECTRIC:
Central Maine Power Company
James Cough & Anthony Boucher
57 Old Winthrop Road
Augusta, ME 04333
(207) 578-2062

ELECTRIC:
Kennebunk Light & Power District
4 Factory Pasture Lane
Kennebunk, ME 04043
(207) 985-331

COMMUNICATIONS:
Consolidated Communications
Neil Lassard
5 Davis Farm Road
Portland, ME 04103
(207) 232-8767

COMMUNICATIONS:
Go Net Speed
56 Campus Drive
Jim Knight
New Gloucester, ME 04260
(207) 688-8284

COMMUNICATIONS:
Fidium Fiber
Patrick Morrison
600 Sable Oaks Dr.
South Portland, ME 04106
(207) 745-9363

COMMUNICATIONS:
Charter Communications
118 Johnson Road
Portland, ME 04102
(207) 253-2324

COMMUNICATIONS:
FirstLight
Richard Mankin
14 Resilient Circle
Brunswick, ME 04011
(207) 318-8874

MAINE TURNPIKE AUTHORITY:
(Communication, Lighting, Electric)
Maine Turnpike Authority
2360 Congress Street,
Portland, Maine
Coordinate through Resident

WATER:
Portland Water District (PWD)
ATTN: Joe Parent
P.O. Box 3553
Portland, ME 04104
(207) 523-5261

104.4.7 Cooperation With Other Contractors

This Subsection is amended by the addition of the following:

Adjacent contracts currently scheduled for the 2027 construction season include:

MTA Contract 2027.09 – York/Ogunquit/Wells Roadside Clearing, MM 7-17 NB

MTA Contract 2027.04 – Arundel/Saco: Kennebunk River and Saco River Bridge Repairs, MM 27.2 and 33.0

MTA Contract 2027.05 – Arundel/Scarborough/Portland: Limerick Road, Route 114, Route 114 over I-295 and Westbrook Street Bridge Repairs, MM 28.3, 44.0, 44.1, and 47.1

MTA Contract 2027.08 – Portland: Falmouth Spur Interchange Bridge Replacement Preload, MM 46

105.5.1 General Requirements

Delete the third paragraph and replace with the following:

Toll Free Passage on the Turnpike: The Contractor will be provided with six (6) electronic EZPass toll transponders or toll cards for movement of vehicles, labor and equipment and for delivery of material essential to the Work. The use of the transponders/cards will be limited to the Contractor's project superintendent and supporting traffic control staff. The transponders/cards shall be distributed by the Contractor to the appropriate staff and used while working on the Turnpike.

The following paragraphs are added:

Transponders: Transponders will be provided upon the return of a Terms of Use agreement provided by the Authority and signed by the Contractor.

Cards: The cards may only be used while working on the Project designated on the cards. Such free use shall be limited to the portion of the Turnpike between the site of the Work and the nearest practicable exit. All vehicles with cards must stop at a staffed lane at the toll plazas to present the cards to the toll attendant. All cards shall be returned to the Resident at the completion of the Project. The use of the cards shall be revoked if the cards are misused.

105.8.2 Permit Requirements

The Project is subject to the Stormwater Memorandum of Agreement for Stormwater Management Between the Maine Department of Transportation, Maine Turnpike Authority, and Maine Department of Environmental Protection (Stormwater MOA). Under the Stormwater MOA, all MTA construction, operation, and maintenance activities are subject to Maine Stormwater Law Basic Standards through implementation of MaineDOT's Best Management Practices for Erosion and Sedimentation Control (MaineDOT BMP Manual), which are the Contractor's responsibility to implement. Under the Stormwater MOA, certain projects may also require the construction of permanent post-construction stormwater management BMPs, as specified in the plan set to this project where applicable.

Compliance with the erosion and sedimentation control requirements outlined in this Contract is required by the Contractor.

The Contractor shall comply with the conditions and compliance standards outlined in the MaineDOT Best Management Practices for Erosion & Sedimentation Control and the Stormwater MOA. The Contractor shall indemnify and hold harmless the Maine Turnpike Authority or its agents, representatives and employees against any and all claims, liabilities or fines arising from or based on the violation of the above noted permits.

This Project is also subject to the requirements of the Maine Pollutant Discharge and Elimination System (MPDES) General Permit for the Discharge of Stormwater from MTA's Municipal Separate Storm Sewer Systems (MS4), because it is located within an Urbanized Area (UA) as defined by the 2010 census by the U.S. Bureau of the Census. MS4 compliance requires all Contractors to be properly trained in Erosion and Sedimentation Control (ESC) measures (as per Special Provision Subsections 105.8.1 and 656.07) and implement measures to reduce pollutants in stormwater runoff from construction activities.

105.11 As-Built Plans

The Contractor shall provide the Authority with as-built plans in PDF and MicroStation or AutoCAD. The as-built plans shall note changes to the bid documents, including, but not limited to pavement, concrete, barrier, guardrail, culverts, drainage, foundations, wiring, signs, etc. The as-builts plans shall also provide GPS accurate locations of all underground work. Submittal of Draft, Final Draft, and 100% as-built plans to the Resident shall be conditions of Mobilization Payment, Retainage Reduction, and Final Payment as noted in Special Provision 108.

105.11.1 As-Built Plan Submittals

The Contractor shall make the following submittals of as-built plans to the Resident as part of the conditions of Mobilization Payment, Retainage Reduction, and Final Payment as noted in Special Provision 108:

a. Draft As-built Plans containing any underground work completed within the prior 30 day period once 50% of the Work is complete.
b. Final Draft As-Built Plans containing all underground work
c. 100% As-Built Plans containing all underground work and changes

105.11.2 As Built Plan Requirements

As-built plans and CADD files shall conform to the following requirements:

a. Include legend of line weights and styles
b. Project stationing shall be on its own layer and be color white
c. Changes to pavement, concrete, barrier, guardrail, foundations, signs etc. shall be on their own layer and be color brown
d. Electric power lines, cable, conduit, and lighting cables shall be on their own layer and be color red
e. Gas, oil, steam, petroleum, or gaseous materials shall be on their own layer and be color yellow
f. Communication, alarm or signal lines, cables, or conduit shall be on their own level and be color orange
g. Potable water shall be on its own layer and be color blue
h. Sewers and drain lines shall be on their own layer and be color green
i. Reclaimed water, irrigation, and slurry lines shall be on their own level and be color purple

107.1 Contract Time and Contract Completion Date

This Subsection is amended by the addition of the following:

All work shall be completed on or before December 17, 2027. VMS Replacement construction shall be substantially complete by November 26, 2027.

107.1.1 Substantial Completion

This Subsection is amended by the addition of the following:

Substantially complete shall be defined by the Authority as the following:

- All VMS signs, cameras, and communication systems are completely in place, tested and operation including:
    - Removal and demolition of existing sign structures and foundations;
    - Removal of existing spare parts from Gray Maintenance Yard;

  - New sign foundations installed, new and/or relocated sign structures complete including walkway fabrication and installation;
  - VMS controller foundation and cabinet installed, energized by street side power source, and communications operational. All electrical conductors and communication cables installed between various components;
  - Grout pads replaced (where applicable);
  - Permanent concrete barrier installed;
  - Surface pavement and guardrail installed including attachments and available for traffic;
  - Access roads for overhead signs and associated culverts complete;
  - Lightning protection installed and LPI-IP Master Installation Certificate obtained;
  - Highway Advisory Radios are operational (where applicable);
  - and all other incidentals required to complete the work.
- Mainline and local roads fully opened to traffic including shoulders, guardrail, surface pavement and signage.
- All disturbed slopes loamed, seeded and mulched, temporary erosion control mix and/or blanket installed where necessary.

Supplemental Liquidated damages on a calendar day basis in accordance with Subsection 107.8 shall be assessed for each calendar day that substantial completion is not achieved.

107.3.2 Night Work

This Subsection is amended by the addition of the following:

Nightwork will be allowed within the limitations defined in Section 652. The Contractor shall formally notify the Resident of their intent to perform night work a minimum of 14 calendar days ahead of the planned nightwork.

107.4.7 Limitations of Operations

When delivering or removing materials to or from the median closure, the travel lane adjacent to the median on the side of the operation shall be closed to traffic.

During installation of overhead sign structure median columns, the inside travel lane adjacent to the median shall be closed to traffic in both the northbound and southbound directions.

During installation of overhead sign structure steel truss elements, the inside travel lane adjacent to the median in the roadway opposite the sign location shall be closed to traffic.

Between November 15th and April 1st the Contractor shall provide, at a minimum, 4’-0” inside shoulders and 8’-0” outside shoulders along the Maine Turnpike mainline

There is a small area of known wetlands at Holmes Road NB (MM 43.0) as shown on the plans. The contractor shall not disturb the wetlands for access to the site. The contractor shall limit clearing within the wetland area. No temporary side casting of spoils are allowed into the wetland.

The contractor shall install erosion control barrier along wetland edge prior to commencement of site work.

The Exit 45 (Route 703 Westbound) is located in a designated stormwater meadow buffer. The contractor shall install erosion control barrier along work edge prior to commencement of site work and all disturbed ground shall be loamed, seeded, and mulched as soon as possible for revegetation.

The Contractor shall schedule the work to minimize the time between decommissioning each existing VMS and the new VMS being operational, if this period exceeds four (4) weeks at any location, the Contractor shall provide a portable changeable message sign at each affected location. Each portable sign shall be capable of receiving remote message updates from the MTA Radio Room in accordance with Special Provision 652. Portable signs shall be paid for under Item 652.361, Maintenance of Traffic Control Devices.

108.2.1 Generation of Progress Payments

The Authority will estimate the amount of Work performed at least monthly and make payment based upon such estimates. Estimates may be paid bimonthly (twice-a-month) if the bimonthly (twice-a-month) invoices exceed $100,000. No such estimates or payment will be made if, in the judgment of the Authority, the Work is not proceeding in accordance with the provisions of the Contract. The Contractor agrees to waive all claims related to the timing and amount of such estimates.

108.2.3 Mobilization Payment

The second paragraph is deleted in its entirety and replaced with the following:

Upon approval of all pre-construction submittals required for approval by this Contract, including those listed in Section 104.4.2 – Preconstruction Conference, the Contractor will receive payment of 50% of the Lump Sum price for Mobilization, not to exceed 5% of the Bid less the amount bid for Mobilization. After the Authority determines that the Work is 50% complete and the Contractor has submitted a Draft (50%) as-built submittal of all underground work to date (within the prior 30 day pay period) as defined in Special Provision 105., the Contractor will receive the other 50% of the Lump Sum price for Mobilization, not to exceed 5% of the Bid less the amount bid for Mobilization. Any remaining Mobilization will be at the completion of physical work.

108.3 Retainage

The seventh paragraph is deleted in its entirety and replaced with the following:

When requested by the Contractor, an 80 percent reduction of retainage will be considered by the Authority when the Project is substantially complete and the Contractor has submitted a Final Draft (98%) as-built submittal of all underground work, in accordance with Special Provision 105. When requesting a reduction, the Contractor shall include an explanation of the outstanding Work, an estimate of the cost to complete the Work, and a schedule for completing the Work. Seasonal limitations as well as warranty and establishment periods (for vegetation) shall be addressed.

# SPECIAL PROVISION

## SECTION 202

## REMOVING STRUCTURES AND OBSTRUCTIONS

(Removal of Existing Spare Sign Parts)

### 202.01 Description

The following paragraphs are added:

Various spare sign components are currently stored at the Gray Northbound Toll Building. These materials shall become the property of the Contractor and shall be removed from the site prior to Project completion.

The Contractor shall provide the Resident with an affidavit identifying the final location of all disposed materials and certifying that disposal was performed in accordance with the Maine Department of Environmental Protection Solid Waste Regulations.

The Contractor shall coordinate access to the facility through the Resident in coordination with the MTA Director of ITS. Access will generally be available Monday through Thursday, 7:00 a.m. to 4:00 p.m.

The following Subsections are added:

### 202.021 Removing Existing Spare Sign Parts

There are approximately 2,000 individual spare sign parts and equipment that shall become property of the contractor and are currently stored at the Gray Northbound Toll Building consisting of but not limited to the following:

- LED Modules
- Circuit Boards
- Power Supplies
- Fans
- Heaters

### 202.05 Method of Measurement

The following paragraph is added:

The removal of existing spare sign parts shall be paid by the lump sum.

202.06 Basis of Payment

This Subsection is amended by the addition of the following:

Removing spare sign parts will be paid for at the Contract lump sum price; which price shall be full compensation for the legal removal and disposal of all parts, and shall include all materials, labor, tools and equipment necessary to complete this work.

Payment will be made under:

| Pay Item | | Pay Unit |
|---|---|---|
| 202.071 | Removal of Existing Spare Sign Parts | Lump Sum |

# SPECIAL PROVISION

## SECTION 203

## EXCAVATION AND EMBANKMENT

### 203.01 Description

The following paragraph is added:

This work shall consist of cutting, removing and disposing of the full depth of existing bituminous concrete pavement to facilitate install of the new median barrier at Holmes Road MM 43.0, within the limits of work as shown on the Plans or as approved by the Resident. The pavement shall be sawcut to the full depth of pavement at the limits of the excavation to provide a clean, vertical cut surface. Care shall be taken not to undermine the adjacent shoulder pavement. Any damage shall be repaired to the satisfaction of the resident and payment shall be incidental to the Contract.

### 203.04 General

The following sentence is added to the end of the third paragraph.

There are no approved waste storage areas or waste areas within the Project limits unless shown on the Plans. Unsuitable materials shall be disposed of off-site in accordance with Subsection 203.06.

All excavations shall be accomplished in accordance with the applicable OSHA Standards. The Resident reserves the right to request the Contractor to prepare an excavation plan. This plan shall include, but not necessarily be limited to, the limit and depth of excavation, side slope, shoring, trench box and utility support.

### 203.10 Embankment Construction - General

The thirteenth and fourteenth paragraphs are deleted and replaced with the following:

All portions of the embankment shall be compacted in accordance with the designated embankment compaction requirements specified for the Project.

The existing slopes should be benched as shown on the drawings prior to placing additional fill. Embankment fill should be placed in lifts which extend laterally beyond the limits of the design side slopes such that the specified degree of compaction is achieved within the limits of the completed embankment. The slopes should then be trimmed back to design dimensions.

### 203.16 Winter Construction of Embankments

The word “core” is deleted from the first and second sentences in the first paragraph.

203.18 Method of Measurement

The following paragraphs are added:

There will be no additional payment for the required excavation plan, and costs shall be incidental to 203 Excavation and Embankment will not be paid for directly, but will be considered incidental to the related Median Barrier – Type C.

# SPECIAL PROVISION

## SECTION 206

## STRUCTURAL EXCAVATION

### 206.02 Construction Methods

The following paragraphs are added:

There are no approved waste storage areas or waste areas within the Project limits. Unsuitable materials shall be disposed of off-site in accordance with Subsection 203.06.

# SPECIAL PROVISION

## SECTION 401

## HOT MIX ASPHALT PAVEMENT

Section 401 of the Maine Turnpike Authority 2016 Supplemental Specifications is deleted in its entirety and replaced with the following:

### 401.01 Description

The Contractor shall furnish and place one or more courses of Hot Mix Asphalt Pavement (HMA) on an approved base in accordance with the Contract documents and in reasonably close conformity with the lines, grades, thickness, and typical cross sections as shown on the Plans or established by the Resident. The Authority will accept this work under Quality Assurance provisions, in accordance with these Specifications and the requirements of Section 106, Quality, the provisions of AASHTO M 323, except where otherwise noted in Section 401 of these Specifications, and the MaineDOT Policies and Procedures for HMA Sampling and Testing. A Quality Control Plan (QCP) is required.

### 401.02 Materials

Aggregates for HMA Pavements Coarse Aggregate and fine aggregate for HMA pavements shall be graded such that when combined in the proper proportions, including filler if required, the resultant blend will meet the composition of mixture for the type of pavement specified. Materials shall meet the requirements specified in Section 700 – Materials:

| | |
|---|---|
| Asphalt Cement | 702.01 |
| Aggregates for HMA Pavement | 703.07 |
| RAP for HMA Pavement | 703.08 |
| HMA Mixture Composition | 703.09 |

Mainline Surface HMA Coarse aggregate: Each individual aggregate stockpile shall conform to the following requirements. The material retained on the No. 4 sieve, shall consist of angular fragments obtained from crushed quarry stone and be free of dirt or other objectionable materials. Coarse aggregate shall have a Micro-Deval value of 15.0 percent or less as determined by AASHTO T 327. The crushed stone shall have a maximum of 1.5% material finer than the No. 200 mesh when tested in accordance with AASHTO T-11. Flat and elongated particles shall not exceed a maximum of 8% at a 5:1 ratio in accordance with ASTM D-4791. Coarse aggregate angularity shall be a minimum of 95/90 in accordance with AASHTO T-335.

Mainline Surface HMA Fine aggregate: Each individual aggregate stockpile shall conform to the following requirements. The material passing the No. 4 sieve, shall be crushed manufactured sand free from dirt, clay balls, or other objectionable material. Natural sand may be incorporated into the mix at a rate no greater than 10 percent by weight of total aggregate. The unconfined void content of the fine aggregate, excluding natural sand, shall be a 45 minimum value when tested in

accordance with AASHTO T-304, method A. AASHTO T-176 sand equivalent value shall be 45 minimum. The fine aggregate, excluding RAP, shall have a Micro-Deval of 15.0 percent or less when tested in accordance with ASTM D-7428.

Each individual stockpile for both coarse and fine aggregates shall be completely separated from any other stockpile and be constructed such that the material is visually homogenous and maintains consistent consensus quality test results. A documented testing program and records of all test results shall be maintained for all materials and subject to inspection by the Authority.

Asphalt Low Modulus Joint Sealer: Asphalt Low Modulus Joint Sealer shall be a modified asphalt and rubber compound designed for sealing and improving the strength and performance of the base asphalt cement and shall conform to ASTM D6690 **Type II or IV, as noted in the plans**, and the following specifications:

| | **Type II** | **Type IV** |
|---|---|---|
| **Cone Penetration** | **90 max.** | **90-150** |
| **Flow @ 60°C [140ºF]** | | **3.0mm [1/8 in] max** |
| **Bond, non-immersed** | **Three 12.5 mm [½ in] specimens pass 3 cycles @ 50% extension @ -29°C [-20ºF]** | **Three 12.5 mm [½ in] specimens pass 3 cycles @ 200% extension @ -29°C [-20ºF]** |
| **Resilience, %** | **60 min** | **60 min** |
| **Asphalt Compatibility, ASTM D5329** | **pass*** | **pass*** |

* There shall be no failure in adhesion, formation of any oily exudate at the interface between the sealant and asphaltic concrete or other deleterious effects on the asphaltic concrete or sealant when tested at 60°C [140ºF].

The contractor shall provide the Resident or authorized representative with a copy of the material manufacturer's recommendations pertaining to heating, application, and reheating prior to the beginning of operations or the changing of materials.

401.021 Recycled Asphalt Materials

Recycled Asphalt Pavement (RAP) may be introduced into the mixture at percentages approved by the Authority. If approved by the Authority, the Contractor shall provide documentation stating the source, average test results for average residual asphalt content, and stockpile gradations showing RAP materials have been sized to meet the maximum aggregate size requirements of each mix designation. The Authority will obtain samples for verification and approval prior to its use.

In the event that RAP source or properties change, the Contractor shall notify the Authority of the change and submit new documentation stating the new source or properties. A plant produced test batch meeting all requirements including Hamburg Wheel Tracker results.

RAP shall meet the following requirements:

| **Classification** | **Asphalt Content Standard Deviation** | **% Passing #200 Sieve Standard Deviation** | **% Passing #200 Sieve / Asphalt Content Ratio** | Residual Aggregate Micro Deval Loss Value |
|---|---|---|---|---|
| Class II | ≤ 0.5 | ≤ 1.0 | ≤ 2.8 | ≤ 18.0 |
| Class I | ≤ 0.3 | ≤ 0.5 | ≤ 1.8 | ≤ 18.0 |

401.03 Composition of Mixtures

HMA pavement mixtures for base, intermediate, shim and local road bridge projects shall be a currently approved MDOT design unless otherwise noted. A maximum of 20% RAP may be used. VMA during production shall meet the requirements listed in Table 1.

HMA pavement mixtures for Mainline surface paving projects shall conform to the following requirements:

The Contractor shall compose the Hot Mix Asphalt Pavement with aggregate, Performance Graded Asphalt Binder (PGAB), and mineral filler if required. HMA shall be designed and tested according to AASHTO R35 and the volumetric criteria in Table 1. The Contractor shall size, uniformly grade, and combine the aggregate fractions in proportions that provide a mixture meeting the grading requirements of the Job Mix Formula (JMF). The Contractor may use a maximum of 15 percent Class I reclaimed asphalt pavement (RAP) or a maximum of 10 percent Class II RAP in any mainline surface course.

The Contractor shall submit a job mix formula (JMF) developed for each specified mixture at least 30 days prior to placement.

The JMF shall establish a single percentage of aggregate passing each sieve size within the limits shown in Subsection 703.09. The mixture shall be designed and produced, including all production tolerances, to comply with the allowable control points for the particular type of mixture as outlined in Subsection 703.09. The JMF shall state the original source, gradation, and percentage to be used of each portion of the aggregate and mineral filler if required. It shall also state the proposed PGAB content, the name and location of the refiner, the supplier, the source of PGAB submitted for approval, the type of PGAB modification if applicable, and the location of the terminal if applicable.

In addition, the Contractor shall provide the following information with the proposed JMF:

- Properly completed JMF indicating all mix properties (Gmm, VMA, VFB, etc.).
- Stockpile Gradation Summary.
- Contractor generated test reports for individual aggregate consensus properties. Test results must have been generated within six months of JMF submission

- Design Aggregate Structure Consensus Property Summary.
- Design Aggregate Structure Trial Blend Gradation Plots (0.45 power chart).
- Trial Blend Test Results for at least three different aggregate blends. (Not required if the supplier has mix history with the selected design aggregate blend)
- Selected design aggregate blend.
- Test results for the selected design aggregate blend at a minimum of three binder contents.
- Test results for final selected blend compacted to $N_{max.}$
- PGAB certification from the supplier
- Specific Gravity for the PGAB to be used.
- Recommended mixing and compaction temperatures from the PGAB supplier.
- Data Sheets (SDS) For PGAB.
- Asphalt Content vs. Air Voids trial blend curve.
- Test report for Contractor's Verification sample.
- Summary of RAP test results (if used), including count, average and standard deviation of binder content and gradation. This should be a MaineDOT generated report showing approval.

At the time of JMF submittal, the Contractor shall identify and make available the stockpiles of all proposed aggregates at the plant site. There must be a minimum of 150 ton for coarse aggregate stockpiles, 75 ton for fine aggregate stockpiles before the JMF may be submitted. The Authority shall obtain samples for laboratory testing. The Contractor shall also make available to the Authority the PGAB proposed for use in the mix in sufficient quantity to test the properties of the asphalt and to produce samples for testing of the mixture. Before the start of paving, the Contractor and the Authority's representative shall test a production sample in the Contractor's laboratory for evaluation. If the Authority finds the mixture acceptable, an approved JMF will be forwarded to the Contractor. The Authority will then notify the Contractor that paving may commence. The first day's production shall be monitored, and the approval may be withdrawn if the mixture exhibits undesirable characteristics such as checking, shoving or displacement. The Contractor shall be allowed to submit aim changes within 24 hours of receipt of the first Acceptance test result for an individual JMF. Adjustments will be allowed of up to 2% on the percent passing the 2.36 mm sieve through the 0.075 mm and 3% on the percent passing the 4.75 mm or larger sieves. Adjustments will be allowed on the %PGAB of up to 0.2 percent. Adjustments will be allowed on GMM of up to 0.010.

The contractor may request to carry over an approved mix design from the previous calendar year. The Authority will evaluate the request based on the performance and production history from the previous season. If the request is approved by the Authority no aggregate material, RAP, or aim changes will be granted for a carryover mix design and the initial design must not be older than the previous paving season.

The Contractor shall submit a new JMF for approval each time a change in material source or materials properties is proposed. The same approval process shall be followed. The cold feed percentage of any aggregate except natural sand may be adjusted up to 10 percentage points from the amount listed on the JMF, however no aggregate listed on the JMF shall be eliminated. Natural sand may be adjusted up to 5 percent from the amount listed on the JMF but shall not exceed 10% by weight of total aggregates. The cold feed percentage for RAP may be reduced up to five percentage points from the amount listed on the JMF and shall not exceed the percentage of RAP approved in the JMF or for the specific application.

**TABLE 1**
**VOLUMETRIC DESIGN CRITERIA**

| Design ESAL's (Millions) | Required Density (Percent of $G_{mm}$) | | | Voids in the Mineral Aggregate (VMA)(Minimum Percent) Nominal Maximum Aggregate Size (mm) | | | | Voids Filled with Binder (VFB) (Minimum %) | Fines/Eff. Binder Ratio |
|---|---|---|---|---|---|---|---|---|---|
| | $N_{initial}$ | $N_{design}$ | $N_{max}$ | 19 | 12.5 | 9.5 | 4.75 | | |
| 3 to <30 | ≤89.0 | 96.0 | ≤98.0 | 13.5 | 14.5 | 15.5 | 15.5 | 65-80 | 0.6-1.2 |

As part of the JMF submittal the Contractor shall provide the Authority with Hamburg Wheel Tracker test results in accordance with AASHTO T324. The results shall be generated by a third-party independent testing laboratory as approved by the Authority. The test results for each individual specimen as well as the average shall meet the requirements of Table 1A

**TABLE 1A**
**HAMBURG WHEEL TRACKER REQUIREMENTS**

| Specified PG Binder Grade | Test Temperature (ºC) | Maximum Rut Depth (mm) | Minimum Number of Passes | Minimum Allowable SIP* |
|---|---|---|---|---|
| 64-28 | 45 | 12.5 | 20,000 | 15,000 |
| 64E-28 | 48 | 8.0 | 20,000 | 15,000 |
| 70E-28 | 50 | 6.3 | 20,000 | 15,000 |

401.031 Warm Mix Technology

The Contractor may place Hot Mix Asphalt Pavement produced with an accepted WMA technology if approved by the Authority. Methods or technologies shall generally be at the Contractors' option, but will be limited to proven, Agency and Industry accepted practice. Mixture production, placement and volumetric testing details, including temperatures, shall be

included in the project specific QCP, submitted to the Authority for approval prior to any work. Weather and seasonal limitations as outlined in section 401.06 may be reduced by a maximum 5ºF with the use of WMA only after seeking approval from the MTA Construction Project Manager in advance. The temperature reduction shall only apply when paving of the current work pass had already begun while the ambient temperature was at or above the limits outlined in section 401.06. No reduction in ambient temperature will be permitted for HMA being placed over bridge deck membrane.

401.04 Temperature Requirements

After the JMF is established, the temperatures of the mixture shall conform to the following tolerances:

- In the truck at the mixing plant – allowable range 275° to 325°F.
- At the paver – allowable range 275° to 325°F.
- Or the recommendations, approved by the Authority, from the Asphalt Binder supplier.
- Any HMA placed over bridge deck membrane shall have a minimum temperature of 300° F measured directly behind the screed in the uncompacted mat.

The JMF and the mix subsequently produced shall meet the requirements of Table 1.

No vehicular loads shall be permitted on newly completed pavement until adequate stability has been attained and the material has cooled sufficiently to prevent distortion or loss of fines. The newly paved area may be opened to traffic after the internal temperature of the pavement has cooled to 120° F. The Resident will test the internal temperature of the pavement and shall be the sole judge as to the opening to traffic. The period of time before opening to traffic may be extended at the discretion of the Resident. The lane closure may not be removed until the internal temperature has cooled to 120° F.

401.05 Performance Graded Asphalt Binder

Unless otherwise noted in Special Provision Section 403, Hot Bituminous Pavement, PGAB shall be 64-28. The PGAB shall meet the applicable requirements of AASHTO M320 - Standard Specification for PGAB. The Contractor shall request approval from the Authority for a change in PGAB supplier or source by submitting documentation stating the new supplier or source a minimum of 24-hours prior to the change. If the PGAB supplier or source is changed, the Contractor shall make efforts to minimize the occurrence of PGAB co-mingling.

401.06 Weather and Seasonal Limitations

The Contractor may place Hot Mix Asphalt Pavement for use other than a traveled way wearing course, provided that the air temperature as determined by an approved thermometer (placed in the shade at the paving location) is 45°F or higher and the area to be paved is not frozen. The Contractor may place Hot Mix Asphalt Pavement as traveled way wearing course, provided

the air temperature determined as above is 50°F or higher. For the purposes of this Section, the traveled way includes truck lanes, ramps, shoulders, approach roads and auxiliary lanes. The atmospheric temperature for all courses on bridge decks shall be 50°F or higher.

Hot Mix Asphalt Pavement used for curb, driveways, sidewalks, islands, or other incidentals is not subject to seasonal limitations, except that conditions shall be satisfactory for proper handling and finishing of the mixture. All mixtures used for curb, driveways, sidewalks, islands, or other incidentals shall conform to Subsection 401.04, Temperature Requirements. Unless otherwise specified, the Contractor shall not place Hot Mix Asphalt Pavement on a wet or frozen surface and the air temperature shall be 40°F or higher.

On all sections of overlay with wearing courses one inch thick or less, the wearing course for the travel way and adjacent shoulders shall be placed provided the air temperature is determined as above 50°F or higher.

401.07 Hot Mix Asphalt Plant

401.071 General Requirements

HMA plants shall meet the requirements of the 2020 Maine Department of Transportation Standard Specifications section 401.07 and maintain current approval from the Maine Department of Transportation.

401.08 Hauling Equipment Trucks for Hauling Hot Mix Asphalt

Trucks for hauling Hot Mix Asphalt Pavement shall have tight, clean, and smooth metal dump bodies, which have been thinly coated with a small amount of approved release agent to prevent the mixture from adhering to the bodies. Solvents based agents developed to strip asphalts from aggregates will not be allowed as release agents.

All truck dump bodies shall have a cover of canvas or other water repellent material capable of heat retention, which completely covers the mixture. The cover shall be securely fastened on the truck, unless unloading.

All truck bodies shall have an opening on both sides, which will accommodate a thermometer stem. The opening shall be located near the midpoint of the body, at least 12 inches above the bed.

The undercarriage of haul units actively hauling HMA to the site shall be relatively free of dust / mud agglomerations. Haul units found to be contaminating the paving surface shall be removed from the site and cleaned prior to returning.

The contractor shall supply enough haul units such that paving is continuous and without any stops or paver speed changes during the installation of ramp or mainline wearing courses utilizing an MTV. or any course placed on a bridge deck. The contractor will be charged a fee of

$1,000. for every occurrence if paving is either stopped or the paver must slow down to avoid stopping due to inadequate number of haul units at the sole discretion of the Authority.

401.09 Pavers

Pavers shall be self-contained, self-propelled units with an activated screed (heated if necessary) capable of placing courses of Hot Mix Asphalt Pavement in full lane widths specified in the Contract on the mainline, shoulder or similar construction.

On projects with no price adjustment for smoothness, pavers shall be of sufficient class and size to place Hot Mix Asphalt Pavement over the full width of the mainline travel way with a 10 feet minimum main screed with activated extensions.

The Contractor shall place Hot Mix Asphalt Pavement on the mainline with a paver using an automatic grade and slope controlled screed, unless otherwise authorized by the Authority. The controls shall automatically adjust the screed and increase or decrease the layer thickness to compensate for irregularities in the preceding course. The controls shall maintain the proper transverse slope and be readily adjustable so that transitions and super elevated curves can be properly paved. The controls shall operate from a fixed or moving reference such as a grade wire or ski type device (floating beam) with a minimum length of 30 ft, a non-contact grade control with a minimum span of 24 ft, except that a 40 ft reference shall be used on mainline projects.

The Contractor shall operate the paver in such a manner as to produce a visually uniform surface texture and a thickness within the requirements of Subsection 401.101, Surface Tolerances. The paver shall have a receiving hopper with sufficient capacity for a uniform spreading operation and a distribution system to place the mixture uniformly, without segregation in front of the screed. The screed assembly shall produce a finished surface of the required evenness and texture without tearing, shoving, or gouging the mixture. Pavers with extendible screeds shall have auger extensions and tunnel extenders as per the manufacturer's recommendations, a copy of which shall be available if requested. The forward operating speed of the paver shall be limited based on the course being placed. A shim or leveling course shall have a maximum speed of 50 feet per minute (fpm). Any base, intermediate, or surface course shall have a maximum paver speed of 45 fpm. The limited speed is not to be calculated on an average basis over time but shall be the actual limitation at any moment during the paving operation.

The Contractor shall have the paver at the Project site sufficiently before the start of paving operations to be inspected and approved by the Authority. The Contractor shall repair or replace any paver found worn or defective, either before or during placement, to the satisfaction of the Authority. Pavers that produce an unevenly textured or non-uniform mat will be repaired or replaced before continuing to place HMA on MTA projects. On a daily basis, the Contractor shall perform density testing across the uncompacted mat being placed, at 12 inch intervals. If the values vary by more than 2.0 percent from the mean, the Contractor shall make adjustments until the inconsistencies are remedied.

Failure to replace or repair defective placement equipment may result in a letter of suspension of work and notification of a quality control violation resulting in possible monetary penalties as governed by Section 106, Quality.

401.091 Material Transfer Vehicle (MTV)

When required by Special Provision Section 403, the paver shall be supplied mixture by a material transfer vehicle (Roadtec SB2500 or approved equal) capable of receiving and storing bituminous mixture from haul trucks, remixing, and delivering the mix to the paver hopper in a consistently uniform manner.

The MTV shall operate as an independent unit not attached to the paver. It shall be a commercially manufactured unit specifically designed to transfer the hot mix from haul trucks to the paver without depositing mix on the roadway.

Also required is a separate hopper with a capacity of 18 mg (20 Ton) that shall be inserted into the regular paving hopper.

The MTV shall be designed so that the mix receives additional mixing action.

The MTV and the hopper insert will not be measured separately for payment, but shall be incidental to the various Hot Mix Asphalt items.

401.10 Rollers

Rollers shall be static steel, pneumatic tire, oscillatory, or approved vibrator type. Rollers shall be in good mechanical condition, capable of starting and stopping smoothly, and be free from backlash when reversing direction. Rollers shall be equipped and operated in such a way as to prevent the picking up of hot mixed material by the roller surface. The use of rollers, which result in crushing of the aggregate or in displacement of the HMA will not be permitted. Any Hot Mix Asphalt Pavement that becomes loose, broken, contaminated, shows an excess or deficiency of Performance Graded Asphalt Binder, or is in any other way defective shall be removed and replaced at no additional cost with fresh Hot Mix Asphalt Pavement, which shall be immediately compacted to conform to the adjacent area.

The Contractor shall repair or replace any roller found to be worn or defective, either before or during placement, to the satisfaction of the Authority. Rollers that produce grooved, unevenly textured or non-uniform mat will be repaired or replaced before continuing to place HMA on MTA projects.

The type of rollers to be used and their relative position in the compaction sequence shall generally be the Contractor's option, provided Specification densities are attained and with the following requirements:

a. At least one roller shall be a pneumatic-tired on base, intermediate, and variable thickness shim layers. Pneumatic-tired rollers shall be equipped with skirting to

minimize the pickup of HMA materials from the paved surface. The contractor shall provide a weigh slip for the rubber tire being used.

b. Compaction with a vibratory or steel wheel roller shall precede pneumatic-tired rolling, unless otherwise authorized by the Authority.

c. Vibratory rollers shall not be operated in the vibratory mode when checking or cracking of the mat occurs, or on bridge decks.

d. Any method, which results in cracking or checking of the mat, will be discontinued and corrective action taken.

e. The use of an oscillating steel roller shall be required to compact all mixtures placed on bridge decks.

The maximum operating speed for a steel wheel or pneumatic roller shall not exceed the manufacturer's recommendations, a copy of which shall be available if requested.

401.101 Surface Tolerances

The Authority will check surface tolerance utilizing the following methods:

a. A 16 ft straightedge or string line placed directly on the surface, parallel to the centerline of pavement.

b. A 12 ft straightedge or string line placed directly on the surface, transverse to the centerline of pavement.

The allowable tolerance shall be ¼ inch in the segments as described above. This includes fresh HMA joints as well as new longitudinal HMA adjoining pavements. The tolerance shall also apply to the cross slope in a single paver width with the exception that in no case shall the pavement surface in the single paver width be inverted resulting in a depression as measured transverse to the direction of travel. The Contractor shall correct variations exceeding ¼ inch by removing defective work and replacing it with new material as directed by the Authority. The Contractor shall furnish a 12 foot straightedge for the Authority's use.

401.11 Preparation of Existing Surface

The Contractor shall thoroughly clean the surface upon which Hot Mix Asphalt Pavement is to be placed of all objectionable material. When the surface of the existing base or pavement is irregular, the Contractor shall bring it to uniform grade and cross section. All surfaces shall have a tack coat applied prior to placing any new HMA course. Tack coat shall conform to the requirements of Section 409, Bituminous Tack Coat, Section 702, Bituminous Material, and all applicable sections of the Contract.

The contractor will be permitted to be generally innovative in methods to dry existing wet or damp pavement. Any method which causes damage or burning of the existing pavement, or which causes debris to fly into traffic shall be discontinued.

Section 401.111 Layout

The contractor shall layout the site prior to any pavement course or final striping. Layout shall be achieved by physical measurements obtained every 50' along the length to be paved or striped from a fixed reference point. The contractor shall transfer the measurements to the pavement surface every 50' and apply a paint mark at each location. The marks shall then be connected by a smoothed string line and subsequent paint marks applied along the string at no greater than 10' intervals. The Resident will inspect the layout line before associated activities may begin.

401.12 Hot Mix Asphalt Documentation

The Contractor and the Authority shall agree on the amount of Hot Mix Asphalt Pavement that has been placed each day. HMA Pavement yield shall be calculated and monitored by both the resident and the paving foreman. Yield calculations shall be communicated in real time between both parties throughout the paving operations. All delivery slips shall conform to the requirements of 401.073.

401.13 Preparation of Aggregates

The Contractor shall dry and heat the aggregates for the HMA to the required temperature. The Contractor shall properly adjust flames to avoid physical damage to the aggregate and to avoid depositing soot on the aggregate.

401.14 Mixing

The Contractor shall combine the dried aggregate in the mixer in the amount of each fraction of aggregate required to meet the JMF. The Contractor shall measure the amount of PGAB and introduce it into the mixer in the amount specified by the JMF.

The Contractor shall produce the HMA at the temperature established by the JMF.

The Contractor shall dry the aggregate sufficiently so that the HMA will not flush, foam excessively, or displace excessively under the action of the rollers. The Contractor shall introduce the aggregate into the mixer at a temperature of not more than 25°F above the temperature at which the viscosity of the PGAB being used is 0.150 Pa·s (Pascal-second).

The Contractor shall store and introduce into the mixer the Performance Graded Asphalt Binder at a uniformly maintained temperature at which the viscosity of the PGAB is between 0.150 Pa·s and 0.300 Pa·s. The aggregate shall be coated completely and uniformly with a thorough distribution of the PGAB. The Contractor shall determine the wet mixing time for each plant and for each type of aggregate used.

401.15 Spreading and Finishing

On areas where irregularities or unavoidable obstacles make the use of mechanical spreading and finishing equipment impracticable, the Contractor shall spread, rake, and lute the HMA with hand tools to provide the required compacted thickness. Solvent based agents developed to strip asphalts from aggregates will not be allowed as release agents.

On roads opened to two-way traffic, the Contractor shall place each course over the full width of the traveled way section being paved that day, unless otherwise noted by the Authority in Section 403, Hot Mix Asphalt Pavement.

In addition, hot mix asphalt pavement placed on bridges shall also conform to Section 508.04 and the following requirements.

a. The bottom course shall be placed with an approved rubber mounted paver of such type and operated in such a manner that the membrane waterproofing will not be damaged in any way.

b. The top course shall not be placed until the bottom course has cooled sufficiently to provide stability.

c. The Contractor will not be required to cut sample cores from the compacted pavement on the bridge deck, unless otherwise directed by Special Provisions.

d. After the top course has been placed, the shoulder areas shall be sealed 3 ft wide with two applications of an emulsified bituminous sealer meeting the requirements of Section 612.03 – Sealing and Section 702.12 – Emulsified Bituminous Sealing Compound. The first application shall be pre-mixed with fine, sharp sand, similar to mortar sand, as needed to fill all voids in the mix in the area being sealed. The second application may be applied without sand. The sealer shall be carried to the curb at the gutter line in sufficient quantity to leave a bead or fillet of material at the face of curb. The area to be sealed shall be clean, dry and the surface shall be at ambient temperature.

e. The furnishing and applying of the required quantity of sealer for the bridge shoulder areas shall be incidental to placing the hot mix asphalt pavement. The sealer shall be applied after 30 days of cure time on the new HMA placed.

f. The atmospheric temperature for all courses placed on bridge decks shall be 50°F or higher.

g. A pneumatic tire roller shall be used on the bridge deck membrane just prior to paving.

401.16 Compaction

Immediately after the Hot Mix Asphalt Pavement has been spread, struck-off, and any surface irregularities adjusted, the Contractor shall thoroughly and uniformly compact the HMA by rolling.

The Contractor shall roll the surface when the mixture is in the proper condition and when the rolling does not cause undue displacement, cracking, or shoving. The Contractor shall prevent adhesion of the HMA to the rollers or vibrating compactors without the use of fuel oil or other petroleum based release agents. Solvents designed to strip asphalt binders from aggregates will not be permitted as release agents on equipment, tools, or pavement surfaces.

The Contractor shall immediately correct any displacement occurring as a result of the reversing of the direction of a roller or from other causes to the satisfaction of the Authority. Any operation other than placement of variable depth shim course that results in breakdown of the aggregate shall be discontinued. Any new pavement that shows obvious cracking, checking, or displacement shall be removed and replaced for the full lane width as directed by the Resident at no cost to the Authority.

Along forms, curbs, headers, walls, and other places not accessible to the rollers, the Contractor shall thoroughly compact the HMA with mechanical vibrating compactors. The Contractor shall only use hand tamping in areas inaccessible to all other compaction equipment. On depressed areas, the Contractor may use a trench roller or cleated compression strips under a roller to transmit compression to the depressed area.

Any HMA that becomes unacceptable due to cooling, cracking, checking, segregation or deformation as a result of an interruption in mix delivery shall be removed and replaced, with material that meets Contract Specifications at no cost to the Authority.

401.162 Voids

The HMA will be accepted for percent air voids on a sublot basis. Percent air voids will be determined in accordance with AASHTO T 312. Point of sampling will be from the truck at the plant. A sublot will consist of 500 tons. The number of samples per day will be computed as one for every 500 tons plus one for any additional fractional sublot that is equal to or greater than 100 tons or as directed by the Resident. There shall be a minimum of one sublot per day per JMF. One sample shall be taken and tested for each 500 tons of production or portions thereof. Full payment will be made for each 500 tons of production that meets the specified void range of 2.5 to 5.5 percent.

Payment reduction will be applied to each sublot (500 tons) that falls outside of this range. See Subsection 401.21.

Section 401.163 PGAB Content and Aggregate Gradation

The HMA will be accepted for PGAB content and Aggregate Gradation on a sublot basis. PGAB content will be determined in accordance with AASHTO T 308. Aggregate Gradation will be determined in accordance with AASHTO T 30. Point of sampling will be from the truck at the plant. A sublot will consist of 500 tons. The number of samples per day will be computed as one for every 500 tons plus one for any additional fractional sublot that is equal to or greater than 100 tons or as directed by the Resident. There shall be a minimum of one sublot per day per JMF.

Payment reduction will be applied to each sublot (500 tons) that falls outside the allowable limits. See Subsection 401.21.

401.164 Density

Pavement density will be determined by comparing the density of six-inch diameter full depth cores (for the course being laid) taken from the compacted pavement to the Theoretical Maximum Density of that core. Core locations shall be by random samples in conformance with ASTM-D979 & D3665. The Contractor shall supply a masonry saw with a 12 inch diamond wet cutting saw blade capable of cutting the six inch diameter cores. The resident shall determine if trimming is required and the core will be labeled as such.

For determination of pavement density, core samples six inches in diameter, for the full depth of the course being laid, shall be taken by the Contractor from the mixture incorporated in the work after finishing operations have been completed and the pavement has cooled to 70ºF. Ice or dry ice shall be used to reduce temperature as necessary. All core samples shall be inspected, measured, and sealed in an approved transport container by the Resident. The contractor shall deliver the sealed container to the laboratory for testing by the Authority's representative.

Vertical surface of the core area shall be coated with rubberized joint sealer prior to refilling with bituminous mixture. Cores will not be cut for shim pavement.

The joint sealer, bituminous mixture and the labor for obtaining these samples in the field and restoring the surface shall be furnished without charge by the Contractor. The joint sealant shall conform to the material requirements for Asphalt Low Modulus Joint Sealer and shall be incidental to the pavement items. Care must be exercised to avoid excess joint material on top of the finish mat and at the bottom of the joint.

No additional course shall be constructed on a course until the density of the sample has been established and approved.

The densities of the completed pavement shall be 92.5 to 97.0 percent of the theoretical maximum density obtained.

The pavement will be accepted for density on a sublot basis. A sublot will consist of 500 tons. The number of cores per day will be computed as one for every 500 tons plus one for any

portion that does not equal 500 tons or as directed by the Resident. There shall be a minimum of one sublot per day per JMF.

Each sublot will be evaluated separately and full or partial payment will be made based on the results of tests performed on the cores.

Payment reduction will be applied to each core that has a density outside of the allowable range (92.5 to 97.0). See Subsection 401.21.

401.165 Longitudinal Joint Density

When noted in Special Provision Section 403, the Authority will measure the pavement density of longitudinal joints between adjoining mainline travel lanes in both the unconfined and confined condition as determined by the days paving operation. Only joints constructed between travel lanes will be tested, joints between a travel lane and a shoulder are excluded from sampling.

Pavement joint density will be determined by comparing the density of six-inch diameter full depth cores (for the course being laid) taken from the compacted pavement to the Theoretical Maximum Density of that core. The edge of the core nearest the joint shall be a 1" offset from the visible longitudinal joint as determined by the resident. Longitudinal core locations shall be determined by random sampling in conformance with ASTM-D979 & D3665. The Contractor shall supply a masonry saw with a 12 inch diamond wet cutting saw blade capable of trimming the underside of the six inch diameter cores if necessary. The resident shall determine if trimming is required and the core will be labeled as such.

For determination of pavement joint density, core samples six inches in diameter, for the full depth of the course being laid, shall be taken by the Contractor from the mixture incorporated in the work after finishing operations have been completed and the pavement has cooled to 70ºF. Ice or dry ice shall be used to reduce temperature as necessary.

Vertical surface of the core area shall be coated with rubberized joint sealer prior to refilling with bituminous mixture. Cores will not be cut for shim pavement.

The joint sealer, bituminous mixture and the labor for obtaining these samples in the field and restoring the surface shall be furnished without charge by the Contractor. The joint sealant shall conform to the material requirements for Asphalt Low Modulus Joint Sealer and shall be incidental to the pavement items. Care must be exercised to avoid excess joint material on top of the finished mat and at the bottom of the joint.

No additional course shall be constructed on a course until the density of the sample has been established and approved.

The minimum density of the completed pavement shall be 92.0 percent of the theoretical maximum density obtained. Two consecutive failing tests shall result in production shut down.

Prior to resuming paving operations, the contractor quality control unit shall satisfy the Authority that the paving operation will produce joint densities in compliance with the Specifications.

The pavement will be accepted for joint density on a sublot basis. A sublot will consist of 500 tons. The number of cores per day will be computed as one for every 500 tons plus one for any portion that does not equal 500 tons or as directed by the Resident. There shall be a minimum of one sublot per day per JMF.

Each sublot will be evaluated separately and full or partial payment will be made based on the results of tests performed on the cores.

Payment reduction will be applied to each sublot that has a density lower than 92.0% as outlined below.

| PERCENT COMPACTION | PERCENT PAY |
|---|---|
| 92.0 or greater | 100 |
| 91.9 to 90.0 | 95 |
| 89.9 to 88.5 | 90 |
| 88.4 or less | 75 |

401.166 Balanced Mix Design Testing

When required by Special Provision 403, The contractor shall be required to collect samples, fabricate specimens, and provide to the Authority said specimens for Balanced Mix Design testing to be performed by a third-party laboratory. The sample collection and specimen fabrication shall be considered incidental to the item, and the cost of the third-party laboratory testing shall be borne by the Authority. The contractor shall also fabricate and test split samples of the material with their own equipment/subcontracted laboratory.

Balanced Mix Design testing shall include AASHTO T-324 Hamburg Wheel Tracker and ASTM D8225 Ideal CT Index. Four specimens for each test shall be required.

Sample locations will be determined randomly by the Authority at a frequency of one sample per 6000 Tons of HMA produced with a minimum of 3 samples per project. If the total HMA quantity for the item is less than 18,000 Tons the new lot size will be the total divided by three.

The data collected during this testing will not be subject to monetary disincentives but production may be halted by the Authority for failing results.

401.17 Joints

The Contractor shall construct wearing course transverse and longitudinal joints in such a manner that minimum tolerances shown in Subsection 401.101, Surface Tolerances, are met when measured with a straightedge.

The paver shall always maintain a uniform head of HMA during the joint construction.

The HMA shall be free of segregation and meet temperature requirements outlined in Subsection 401.04. Transverse joints of the wearing course shall be straight and neatly trimmed. The Contractor may form a vertical face exposing the full depth of the course by inserting a header, by breaking the bond with the underlying course, or by cutting back with hand tools.

When required by Special Provision Section 403, Mainline Longitudinal joints shall be constructed as notched-wedge joint and constructed in a manner that will best ensure joint integrity.

The installation of the longitudinal joint shall be straight and true to the direction of travel and be located within 1-1/2" of the layout line. Deviations and or crossing back and forth over the layout line shall not be permitted and any such deviations or meandering shall be corrected by saw cutting the affected area prior to placing the adjacent lane with no additional cost to the Authority. Methods or activities that prove detrimental to the construction of straight, sound longitudinal joints will be discontinued.

Extra care shall be taken to insure satisfactory vertical joints in the pavements. On the notched-wedge joints a double layer of tack shall be applied. The Contractor shall apply a coating of joint sealant immediately before paving all cold joints (temperatures less than 120$^{o}$F) to the vertical face of the wearing surface if they are not a notched-wedge joint unless otherwise directed by the Resident. A heavy application of tack coat shall be applied to the vertical face of all cold joints on lower lifts. The Contractor shall use an approved spray apparatus designed for covering a narrow surface. The Authority may approve application by a brush for small surfaces, or in the event of a malfunction of the spray apparatus, but for a period of not more than one (1) working day. Joint sealer shall conform to the material requirements for Asphalt Low Modulus Joint Sealer.

Where pavement under this Contract joins an existing pavement or when the Authority directs, the Contractor shall cut the existing pavement along a smooth line, producing a neat, even, vertical joint. The Authority will not permit broken or raveled edges. The cost of all work necessary for the preparation of joints is incidental to related Contract pay items.

401.18 Quality Control

The Contractor shall submit for approval and operate in accordance with the approved Quality Control Plan (QCP) to assure a product meeting the contract requirements. The QCP shall meet the requirements of Section 106.4 – Quality Control and this Section. The Contractor shall not begin paving operations until the Authority approves the QCP in writing. Prior to placing any mix, the Authority and the Contractor shall hold a Pre-paving conference to discuss the paving schedule, source of mix, type and amount of equipment to be used, sequence of paving pattern, rate of mix supply, random sampling, project lots and sublots and traffic control.
A copy of the QC random numbers to be used on the project shall be provided to the Resident.
The Authority's random numbers for Acceptance testing shall be generated and on file with the Resident and the Project Manager. All personnel of the Authority and the Contractor who have significant information relevant to the paving items shall attend, including the responsible onsite

paving supervisor for the Contractor. The Resident will prepare minutes of the conference and distribute them to all attendees. Any requests to revise the minutes must be made to the Resident within 7 days of receipt. These minutes will constitute the final record of the pre-paving conference.

The QCP shall address any items that affect the quality of the Hot Mix Asphalt Pavement including, but not limited to, the following:

a. JMF(s)

b. Hot mix asphalt plant details

c. Stockpile Management (to include provisions for a minimum 2 day stockpile). Detailing how the stockpiles will be built, labeled, and kept separated from each other. Also provide a detailed description of the aggregate consensus quality testing program including all pertinent qualities, frequency of testing, in house procedures for determining material acceptability and addressing deficient test results.

d. Make and type of paver(s)

e. Make and type of rollers including weight, weight per inch of steel wheels, and average contact pressure for pneumatic tired rollers

f. Name of QCP Administrator, and certification number

g. Name of Process Control Technician(s) and certification number(s)

h. Name of Quality Control Technician(s) and certification number(s)

i. Mixing and transportation including process for ensuring that truck bodies are clean and free of debris or contamination that could adversely affect the finished pavement

j. Testing plan

k. Laydown operations including longitudinal joint construction, procedures for avoiding paving in inclement weather, type of release agent to be used on trucks tools and rollers, compaction of shoulders, tacking of all joints, methods to ensure that segregation is minimized, procedures to determine the maximum rolling and paving speeds based on best engineering practices, and provide these results, as well as past experience in achieving the best possible smoothness of the pavement. Solvent based agents developed to strip asphalts from aggregates will not be allowed as release agents

l. Examples of Quality Control forms including a daily plant report, daily paving report, control charts, and delivery slip template for any plant to be utilized.

m. Silo management and details (can show storage for use on project of up to 36 hours)

n. Provisions for varying mix temperature due to extraordinary conditions or production limitations. If a warm-mix technology is utilized, a proposed target production range (not to exceed 50 F) will be provided for each mix design.

o. Name and responsibilities of the Responsible onsite Paving Supervisor

p. Method for calibration/verification of Density Gauge

q. A note that all testing will be done in accordance with AASHTO and the Maine DOT Policies and Procedures for HMA Sampling and Testing

r. A detailed description of RAP processing, stockpiling and introduction into the plant as well as a note detailing conditions under which the percent of RAP will vary from that specified on the JMF

s. A detailed procedure outlining when production will be halted due to QC or Acceptance testing results

t. A plan to address the change in PGAB source or supplier and the potential co-mingling of differing PGAB's.

u. Provisions for how the QCP will be communicated to the Contractor's field personnel

v. The contractor shall provide a detailed plan outlining how the number of haul units will be determined and supplied to the project to prevent the paver from stopping on mainline wearing course and bridge deck paving over membrane

The QCP shall include the following technicians together with following minimum requirements:

a. QCP Administrator – A qualified individual shall administer the QCP. The QCP Administrator must be a full-time employee of or a consultant engaged by the Contractor or paving subcontractor. The QCP Administrator shall have full Authority to institute any and all actions necessary for the successful operation of the QCP. The QCP Administrator (or its designee in the QCP Administrator's absence) shall be available to communicate with the Authority at all times. The QCP Administrator shall be certified as a Quality Assurance Technologist certified by the New England Transportation Technician Certification Program (NETTCP).

b. Process Control Technician(s) (PCT) shall utilize test results and other quality control practices to assure the quality of aggregates and other mix components and control proportioning to meet the JMF(s). The PCT shall inspect all equipment used in mixing to assure it is operating properly and that mixing conforms to the mix design(s) and other Contract requirements, and that delivery slips and plant recordation accurately reflects the mix being produced with all required information. The QCP shall detail how these duties and responsibilities are to be accomplished and documented, and whether more than one PCT is required. The Plan shall include

the criteria to be utilized by the PCT to correct or reject unsatisfactory materials. The PCT shall be certified as a Plant Technician by the NETTCP.

c. Quality Control Technician(s) (QCT) shall perform and utilize quality control tests at the job site to assure that delivered materials meet the requirements of the JMF(s). The QCT shall inspect all equipment utilized in transporting, laydown, and compacting to assure it is operating property and that all laydown and compaction conform to the Contract requirements. The QCP shall detail how these duties and responsibilities are to be accomplished and documented, and whether more than one QCT is required. The QCT shall be on site during paving operations performing quality control activities. QCT's shall not act as equipment operators, trainers or laborers. The QCP shall include the criteria utilized by the QCT to correct or reject unsatisfactory materials. The QCT shall be certified as a Paving Inspector by the NETTCP.

The QCP shall detail the coordination of the activities of the Plan Administrator, the PCT and the QCT. The Project Superintendent shall be named in the QCP, and the responsibilities for successful implementation of the QCP shall be outlined.

401.191 Inspection/Testing

Aggregates used in mainline surface mixes shall be tested at the following frequencies during mix production:

| Test | Frequency | Test Method |
|---|---|---|
| **Coarse Aggregates** | | |
| Sieve Analysis | 1 per week | AASHTO T27/T11 |
| Specific Gravity | 1 per 10000 Mix Ton minimum of 1test | ASHTO T85 |
| Micro Deval | 1 per 10000 Mix Ton minimum of 1 test | AASHTO T327 |
| **Fine Aggregates** | | |
| Sieve Analysis | 1 per week | AASHTO T27/T11 |
| Specific Gravity | 1 per 10000 Mix Ton minimum of 1test | ASHTO T84 |
| Micro Deval | 1 per 10000 Mix Ton minimum of 1test | ASTM D-7428 |

All quality control testing at the plant and paving site for bituminous concrete paving shall be provided by the Contractor and will be incidental to the various items of the Contract. Quality control testing to verify the job mix formula at the plant shall be comprised of a sample taken and tested for each 500 tons of production. The plant will be shut down for two consecutive out of Specification test results for VMA, VFB, Fbe, PGAB content, gradation, and/or voids. The consecutive failures need not be on the same property. Prior to resuming paving operations, the plant quality control unit shall satisfy the Authority that the plant production is in compliance with

the Specifications. The plant, at no additional cost to the Authority, shall assign qualified quality control staff personnel and have an on-site laboratory equipped to perform all tests.

The Contractor shall monitor plant production on each approved mix design using running average of three control charts as specified in Section 106 - Quality. Control limits shall be as noted in Table 7 below. The UCL and LCL, shall not exceed the allowable gradation control points for the mixture as outlined in Table 1 of Section 703.09.

| **CONTROL LIMITS** | |
|---|---|
| **Property** | **UCL and LCL** |
| % Passing #4 and larger sieves | Target ± 4.0 |
| % Passing #8 and #16 sieves | Target ± 2.5 |
| % Passing #30, #50, and #100 sieves | Target ± 1.5 |
| % Passing #200 sieve | Target ± 1.0 |
| PGAB Content | Target ± 0.25 |
| VMA $N_{des}$ | LCL = LSL + 0.2 |
| Voids $N_{des}$ | Target ± 1.2 |
| $G_{mm}$ | Target ± 0.015 |

The Contractor shall submit all QC test and inspection reports and updated control charts to the Resident by email. The reports and updated control charts shall be signed by the appropriate technician and be submitted to the Resident by 1:00 P.M. / A.M. on the next working day / night.

The Contractor shall submit a list of on-site laboratory and sampling facilities, including available equipment.

Adequate and convenient sampling facilities shall be provided, allowing the Resident and the Authority's designated quality assurance personnel to obtain representative samples from the full width and depth of the discharge area of each aggregate bin. The sampling tray shall be structurally supported during the sampling operation. Access to the sampling facilities shall be provided. The use of such access shall not be more difficult than climbing a ladder leading to a secure platform with railings.

Final acceptance shall be based on quality assurance tests to assure compliance with the job mix formula as established. Samples and certified quality control reports shall be available to the Resident and the Authority's designated quality assurance personnel as often as requested. Sample locations will be random in compliance with ASTM D3665 or as directed by the Resident.

When plant inspection is maintained, the material will be considered acceptable for use when the specified tests from samples obtained at the production plant indicate conformance to the approved job mix formula.

Quality assurance testing services for bituminous concrete pavement shall be provided by the Authority. The Contractor shall provide adequate space and all lab equipment, materials and chemicals at the bituminous plant necessary to verify job mix formula (asphalt content (AASHTO

T164 or T308) and gradations). Upon completion, the Contractor shall be responsible for the proper disposal of all materials and chemicals. This work will not be measured separately for payment, but shall be incidental to the various items of the Contract.

A. Inspection. The Resident, or his authorized representative, shall have access and use of the laboratory facilities at any time and access to all parts of the plant for:

1. Inspection of the condition and operations of the plant.

2. Confirmation of the adequacy of equipment in use.

3. Verification of the character and proportions of the mixture.

4. Determination of temperatures being maintained in the preparation of the mixtures.

5. Inspection of incidental related procedures.

6. Performing quality assurance testing.

B. Plant Testing Laboratory. The Contractor shall provide a plant testing laboratory for use by the Authority's quality assurance personnel for acceptance testing functions.

The plant laboratory shall be available at the following times for use by the Authority's quality assurance personnel:

1. During periods of pavement production;

2. During periods of sampling and testing; and,

3. Whenever materials subject to the provisions of these Specifications are being supplied or tested.

The Authority's quality assurance personnel will always have priority in use of the laboratory. The laboratory shall have sufficient equipment in order for both (Authority’s and Contractor’s) testing representatives to operate efficiently.

The plant testing laboratory shall have a floor space area of not less than 150 square feet, with a ceiling height of not less than 7-1/2 feet. The laboratory shall be weather tight, sufficiently heated in cold weather and air-conditioned in hot weather, to maintain temperatures for testing purposes of 70°F ± 5°F.

As a minimum the plant testing laboratory shall have:

1. Adequate artificial lighting.

2. Electrical outlets sufficient in number and capacity for operating the required testing equipment and drying samples.

3. Two fire extinguishers, Underwriter's Laboratory approved.
4. Work benches for testing, minimum 2-1/2 feet by 10 feet.
5. Desk with two chairs.
6. Sanitary facilities convenient to testing laboratory.
7. Exhaust fan to outside air, minimum 12 inch blade diameter.
8. Secure High Speed Internet Access
9. File cabinet with lock for Resident.
10. Sink with running water, attached drain board and drain.
11. Metal stand for holding washing sieves.
12. Mechanical shaker and appropriate sieves (listed in 639.06) meeting the requirements of ASTM E11.
13. Superpave gyratory compactor.
14. Oven, thermostatically controlled, inside minimum one cubic foot.
15. Two volumetric specific gravity flasks, 500 CC.
16. Other necessary hand tools required for sampling and testing.
17. Library containing Contract Specification, latest ASTM Volumes 4.03 and 4.04, AASHTO Materials Parts I and II.
18. Equipment for Maximum Theoretical Density meeting the requirements of AASHTO T209 and equipment for Bulk Spec. Gravity meeting the requirements of AASHTO T166.
19. Infra-red temperature measuring device for use at both plant and Project site.
20. Necessary equipment for PGAB Content testing.
21. Diamond blade saw for trimming pavement cores.
22. Two ovens.
23. All equipment (scales, Superpave gyratory compactor, etc.) to have current calibrations and certifications.

Approval of the plant and testing laboratory by the Resident requires all the above facilities and equipment to be in good working order during pavement production, sampling and testing.

Failure to provide any of the above shall be sufficient cause for disapproving the bituminous plant operations.

401.21 Method of Measurement

The Authority will measure Hot Mix Asphalt Pavement by the ton in accordance with Subsection 108.1, Measurement of Quantities for Payment.

A reduction in payment will occur when the voids, asphalt content, gradation, and density are other than the limits specified below for 100 percent payment. The payment reduction for voids and PGAB content and density will be based upon each sublot (500 tons) of production as specified in Subsections 401.162, 401.163, 401.164, and 401.165. The Contractor may request one retest for each failing sublot for core density only. The original core density and the recut core density shall be averaged together to determine payment for the sublot. No retest will be allowed for voids or asphalt content. The Contractor shall pay $250.00 for each additional core tested. Pavement restoration will not be measured separately for payment but shall be incidental to the respective pay item.

Any lot resulting in zero payment shall be removed, disposed of and replaced at no additional cost to the Authority. Replacement pavement will be paid for based on the accepted and payment criteria specified herein.

| **CORE DENSITY VS. CORE THEORETICAL MAXIMUM DENSITY COMPACTION (SURFACE) 92.5-97 PERCENT** | |
|---|---|
| | |
| **PERCENT COMPACTION** | **PERCENT PAYMENT** |
| 92.5 - 97.0 | 100 |
| 91.5 - 92.4, 97.1 - 97.9 | 95 |
| 90.5 - 91.4, 98.0 - 98.5 | 85 |
| 90.0 - 90.4, 98.6 - 99.0 | 75 |
| <90.0, > 99.0 | 0 |
| Note: Percent compaction is the percentage of the field core density as compared to the Theoretical Maximum Density (TMD) of that core. | |

| **AIR VOIDS – 2.5 – 5.5 PERCENT** | |
|---|---|
| | |
| **VOIDS** | **PAYMENT PERCENT** |
| 2.5 to 5.5 | 100 |
| 2.0 - 2.4, 5.6 - 6.1 | 95 |
| 1.5 – 1.9, 6.2 – 6.6 | 85 |
| 1.0 - 1.4, 6.7-7.1 | 75 |
| <1.0, >7.1 | 0 |
| Note: Voids are based on the average of the test specimens fabricated at the plant for each sublot (500 tons). | |

Payment for PGAB content shall be based on the JMF aim with an allowable production tolerance of 0.4% except that test results which fall outside of the following ranges shall not be permitted:

| | |
|---|---|
| 9.5 mm | 5.7 – 7.5 |
| 12.5 mm | 5.2 – 6.4 |

| **9.5 mm PGAB CONTENT** | |
|---|---|
| **% PGAB** | **% PAYMENT** |
| JMF Aim ± 0.4 | 100 |
| JMF Aim + 0.5 , - 0.5 , < 5.7 | 95 |
| JMF Aim + 0.6 , - 0.6 , < 5.6 | 85 |
| JMF Aim + 0.7 , - 0.7 , < 5.5 | 75 |
| JMF Aim + 0.8 , - 0.8 , ≦ 5.4, > 7.5 | 50 |
| Note: PGAB content is based on samples tested at the plant for each 500 Ton sublot | |
| **12.5 mm PGAB CONTENT** | |
| **% PGAB** | **% PAYMENT** |
| JMF Aim ± 0.4 | 100 |
| JMF Aim + 0.5 , - 0.5 , < 5.1 | 95 |
| JMF Aim + 0.6 , - 0.6 , < 5.0 | 85 |
| JMF Aim + 0.7 , - 0.7 , < 4.9 | 75 |
| JMF Aim + 0.8 , - 0.8 , ≦ 4.8, > 6.4 | 50 |
| Note: PGAB content is based on samples tested at the plant for each 500 Ton sublot | |

| **Gradation** | |
|---|---|
| | |
| **Sieve Size** | **% Deduction** |
| % Passing #4 and larger sieves | N/A |
| % Passing #8 sieve | 2 |
| % Passing #16 sieve | N/A |
| % Passing #30 sieve | N/A |
| % Passing #50 sieve | 1 |
| % Passing #100 sieve | N/A |
| % Passing #200 sieve | 3 |
| Note: Gradation is based on samples tested at the plant for each 500 Ton sublot | |

As an example of payment reduction, if a sublot of 500 tons of 12.5mm was tested and found to have 96 percent TMD compaction, 5.8 percent air voids and asphalt content of 5.19 percent, the payment reduction would be as follows:

| | | | |
|---|---|---|---|
| 500 tons x 1.00 | = 500 tons payment | = | 0 tons reduction (compaction) |
| 500 tons x 0.95 | = 475 tons payment | = | 25 tons reduction (voids) |
| 500 tons x 0.95 | = 475 tons payment | = | 25 tons reduction (asphalt content) |

Payment = 500 tons - (0 + 25 + 25) = 450 tons.

401.22 Basis of Payment

The Authority will pay for the work, in place and accepted, in accordance with the applicable sections of this Section, for each type of HMA specified.

The Authority will pay for the work specified in Subsection 401.11, for the HMA used, except that cleaning objectionable material from the pavement and furnishing and applying bituminous material to joints and contact surfaces is incidental.

Payment for this work under the appropriate pay items shall be full compensation for all labor, equipment, materials, and incidentals necessary to meet all related Contract requirements, including design of the JMF, implementation of the QCP, obtaining core samples, transporting cores and samples, filling core holes, applying specified material to joints, and providing testing facilities and equipment.

# SPECIAL PROVISION

## SECTION 403

## HOT MIX ASPHALT PAVEMENT

Section 403 of the Maine Turnpike Authority 2016 Supplemental Specifications modified as follows:

### 403.01 Description

This work shall also consist of the construction, maintenance and removal of all temporary bituminous ramps at locations as shown on the Plans or as directed by the Resident.

### 403.02 General

The Contractor shall compose the Hot Mix Asphalt Pavement with aggregate, Performance Graded Asphalt Binder (PGAB), and mineral filler if required. The Performance Graded Asphalt Binder (PGAB) shall be polymer modified as detailed in this special provision and shall conform to the requirements of AASHTO M 332. The PG70E-28 Binder shall be modified using Styrene-Butadiene-Styrene (SBS) polymer in a homogeneous blend. The stability of the modified binder shall be verified in accordance with ATSM D7173 using the Dynamic Shear Rheometer (DSR). The DSR G*/sin(δ) results from the top and bottom sections of the ATSM D7173 test shall not differ by more than 10%. The results of ASTM D7173 shall be included on the Certified Test Report. The Contractor shall compose the Hot Mix Asphalt Pavement with aggregate, Performance Graded Asphalt Binder (PGAB), and mineral filler if required. The Performance Graded Asphalt Binder (PGAB) shall be polymer modified as detailed in this special provision and shall conform to the requirements of AASHTO M 332. The PG70E-28 Binder shall be modified using Styrene-Butadiene-Styrene (SBS) polymer in a homogeneous blend. The stability of the modified binder shall be verified in accordance with ATSM D7173 using the Dynamic Shear Rheometer (DSR). The DSR G*/sin(δ) results from the top and bottom sections of the ATSM D7173 test shall not differ by more than 10%. The results of ASTM D7173 shall be included on the Certified Test Report

### 403.03 Construction

All areas which have been milled or overlaid shall have a minimum length temporary ramp constructed as determined by the Resident at the milled or overlaid limits prior to opening the roadway to traffic. Temporary ramps shall be constructed using the same material as being placed on that day or as directed by the Resident. All temporary ramps are to be constructed on a sand joint. The Contractor shall be responsible for all repairs and maintenance required for the temporary ramps.

The Contractor shall be responsible for the layout of the longitudinal centerline between the travel lanes.

The sand and loose debris adjacent to the median guardrail shall be removed and disposed of by the Contractor off of Turnpike property.

The forty-five degree pavement safety edge needed between adjacent lanes and or shoulders shall be incidental to the 202 pay items.

403.04 Method of Measurement

The construction and removal of temporary ramps on sand joints, and maintaining the ramps will not be measured separately for payment.

The removal of sand and loose debris will not be measured separately for payment, but shall be incidental.

All cost for Hot Mix Asphalt Pavement will not be paid for directly, but will be considered incidental to the related Median Barrier – Type C

403.05 Basis of Payment

All cost for Hot Mix Asphalt Pavement will not be paid for directly, but will be considered incidental to the related Median Barrier – Type C

SPECIAL PROVISION

SECTION 403

HOT MIX ASPHALT PAVEMENT

| Course | HMA Grading | Item Number | Total Thickness | No. of Layers | Complimentary Notes |
|---|---|---|---|---|---|
| **Mainline Median Construction** | | | | | |
| **Wearing** | **12.5 mm** | **403.2083** | **1.5”** | **1** | **C,I** |
| **Intermediate** | **12.5 mm** | **403.213** | **1.5”** | **1** | **C,I** |
| **Base** | **19.0 mm** | **403.207** | **2.5”** | **1** | **C,I** |

COMPLEMENTARY NOTES

A. The required PGAB for this mixture shall be **70E-28**.
B. RAP may not be used.
C. The Maine DOT will conduct the job mix verification. The aggregate qualities shall meet the design traffic level of 3 to <10 million ESALS for mix placed under this contract. Minimum and Maximum PGAB content limits from 401.21 shall not apply.
D. The MTA will conduct the job mix verification. The aggregate qualities shall meet the design traffic level of 10 to <30 million ESALS for mix placed under this contract. The design verification, Quality Control, and Acceptance tests for this mix will be performed at **75 gyrations**. (N design)
E. A material transfer vehicle (MTV) shall be used for the placement of Hot Mix Asphalt wearing surface on all roadways including acceleration and deceleration lanes and all ramps.
F. Joints shall be constructed as the “notched wedge” type in accordance with Subsection 401.17.
G. Joint density will be measured in accordance with Subsection 401.165.
H. PGAB shall conform to the provisions of 403.02 – Polymer Modified PGAB for HMA
I. The contractor shall furnish a quality control technician equipped with an approved densometer to ensure density requirements are met.
J. Hydrated Lime may be incorporated into the mixture.
K. The antistrip additive Zycotherm SP manufactured by Zydex Industries shall be incorporated into the PGAB at a rate of 0.125%.
L. Carryover mix designs will not be permitted.
M. Special Provision section 401.166 BMD testing is required.
N. Automatic grade control shall be installed on each side of the screed.

# SPECIAL PROVISION

## SECTION 409

## BITUMINOUS TACK COAT

### 409.01 Description

This Subsection is deleted and replaced with the following:

This work consists of furnishing and applying one uniform application of Emulsified Asphalt RS-1 or RS-1h conforming to the specifications of AASHTO M-140. The application rate shall be 0.04 gal/yd$^2$

### 409.05 Equipment

Add "or as determined by the Resident", after the words "gal/yd$^2$]" in the fourth line of the second paragraph of this Subsection.

### 409.06 Preparation of Surface

The following paragraph is added:

All existing pavement and shoulder areas on which bituminous concrete mixtures are to be placed shall receive a tack coat. The surface area where the tack coat is to be applied shall be dry and cleaned of all dirt, sand, and loose material. Cleaning shall be accomplished by use of revolving brooms or mechanical sweepers. Undesirable material not removed by the above means shall be cleaned by hand sweeping or scraping, or a combination of both. Small areas otherwise inaccessible may be swept with hand brooms. The tack coat shall be applied only when the existing surface is dry.

### 409.08 Method of Measurement

The following paragraphs are added:

All cost for Bituminous Tack Coat will not be paid for directly, but will be considered incidental to the related Median Barrier – Type C

Delivery slips shall be furnished by the Contractor and shall provide space for identifying the vehicle and driver, for stating the volume of material carried, the source of the material, the date, and the Resident or his representative's signature.

Cleaning of the surface area where tack coat is to be applied will not be paid for separately.

409.09 Basis of Payment

All cost for Bituminous Tack Coat will not be paid for directly, but will be considered incidental to the related Median Barrier – Type C

# SPECIAL PROVISION

## SECTION 419

## SAWING AND SEALING JOINTS IN BITUMINOUS PAVEMENT

(Sawing Bituminous Pavement)

### 419.01 Description

This work consists of sawing bituminous concrete pavement as shown on the Plans, as specified herein or as approved by the Resident.

### 419.02 General

The bituminous concrete pavement to be sawed shall be accurately marked before cutting. The marking shall be in accordance with the locations as shown on the Plans or as approved by the Resident. Cutting shall be with an approved power driven saw with an abrasive blade.

Unless otherwise noted or directed, the sawcut shall be vertical, a minimum of 3/8 inch wide, and extend to the depth as shown on the Plans.

Residue or debris from the sawing operation shall be removed immediately and legally disposed of by the Contractor.

### 419.03 Method of Measurement

All cost for Sawing Bituminous Pavement will not be paid for directly, but will be considered incidental to the related Median Barrier – Type C. No additional payment will be made for variations in the pavement thickness.

### 419.04 Basis of Payment

All cost for Sawing Bituminous Pavement will not be paid for directly, but will be considered incidental to the related Median Barrier – Type C; which shall be full compensation for all materials, tools, equipment labor, and all incidentals necessary for the completion of the work to the satisfaction of the Resident

SPECIAL PROVISION

SECTION 502

STRUCTURAL CONCRETE

(Median Barrier Concrete)

502.05 Composition and Proportioning

This first paragraph is added to the beginning of the section:

Concrete for precast median barrier components shall be a Self-Consolidating Concrete Mix meeting Supplemental Specification Requirements 502.05, Composition and Proportioning, for Class P Concrete.

In addition, the following requirements shall supersede those listed on Table 1 Master Limits Table in Section 502.05, Composition and Proportioning, of Supplemental Specification 502 Structural Concrete:

- Minimum Compressive Strength of 5,000 psi
- Minimum Cementitious Content 704 lbs with 50% slag and 50% cement
- Water Cement Ratio 0.31 +- 0.02
- Slump shall be waived for Self-Consolidating Concrete (SCC) Mix
- Spread 25”-30”
- Air Entrainment 5.5-7.5%

Notes 3,4, and 5 in Table 1 Master Limits Table Section 502.05 apply

# SPECIAL PROVISION

## SECTION 510

## SPECIAL DETOURS

## (Construction Access Way)

### 510.01 Description

The following paragraph is added.

This work shall consist of the construction and maintenance thorough construction of permanent access ways to remain for maintenance activities in the future to the following sign locations:

- Cider Hill Road – MM 6.20
- Limerick Road – MM 28.3
- Holmes Road – MM 43.0

### 510.02 Materials

The following paragraph is added.

The materials shall meet the requirements of the following Sections of Division 700 – Materials:

Aggregate Subbase Course – Gravel 703.06c
Common Borrow 703.18
Riprap 703.26
Stone Ditch 703.29
Seed – Method #2 Roadside Mixture 717.03
Mulch 717.04
Erosion Control Blankets 717.061
Erosion Control Geotextile 722.03

Recycled Asphalt Pavement (RAP) shall consist of processed asphalt pavement, crushed and screened to a maximum particle size of 1½ inches. Material shall be free of soil, vegetation, wood, metal, and other deleterious materials and shall be uniformly graded. RAP shall be subject to approval by the Resident prior to placement.

### 510.03 Special Detour Design

The following paragraphs are added.

The Special Detour shall be designed and constructed to accommodate a standard utility bucket truck and shall remain in place upon completion of the Project for future maintenance access. Special Detours shall generally be approximately 16 feet wide and shall not impede existing drainage from the mainline or through ditch lines or bridges. Special Detours shall generally follow existing contours, except at ditch crossings, where culverts shall be installed as shown on the Plans. Special Detours shall be located as close as practicable to the limits shown on the Plans.

The Contractor shall design, prepare, and submit for review plans and working drawings for the proposed access ways (Special Detours). Special Detours shall include access ways, gravel work platforms, and other modifications to existing topography necessary to perform the Contract work and provide future maintenance access. All designs shall be prepared and stamped by a Professional Engineer licensed in the State of Maine.

.

All permanent Riprap and Stone Ditch shall be installed in accordance with Section 610 – Stone Fill, Riprap, Stone Blanket, and Stone Ditch Protection.

Unless authorized otherwise, permanent riprap and stone ditch shall be placed on Erosion Control Geotextile in accordance with Section 620 – Geotextiles.

Unless authorized otherwise, Erosion Control Blanket shall be installed in all permanent ditches and on all non-riprap slopes greater than 3:1. Loam and Seed shall be placed prior to the installation of the Erosion Control Blanket. Installation shall be in accordance with Section 613 – Erosion Control Blankets and any applicable Special Provisions.

Erosion control shall be accomplished in accordance with Section 656 – Temporary Erosion and Water Pollution Control. Any required erosion control measures, including silt fence, stone check dams, etc., shall be constructed in accordance with applicable MaineDOT Standard Details.

510.06 Special Detour Construction

Delete the last paragraph and replace with the following.

Upon completion of the Work, the Contractor shall repair damage resulting from construction operations and leave the Special Detours in a stable, graded, and drained condition suitable for continued maintenance use.

Any access ways, or portions of access ways, designed and constructed to meet the following requirements may remain in place after completion of the Work. Access ways that remain in place shall meet the following specifications:

- The existing topsoil shall be removed to a minimum depth of 6 inches in grassed areas, and 12 inches in wooded/cleared areas.

- The access ways shall consist of a minimum of 12 inches of Aggregate Subbase Course – Gravel, Type D. Aggregate subbase shall be compacted to 95% of the maximum density
- The access way surface shall consist of 3" of Recycled Asphalt Pavement, graded and compacted to provide a dense, stable driveway surface.
- Cut material may be used as fill below the Aggregate Subbase Course – Gravel, Type D if the cut material meets the requirement of Common Borrow.
- The width of the access way wearing surface shall be a minimum of 16 feet.
- The cross slope of the wearing surface shall be 6% or flatter, draining away from the mainline roadway.
- The design and construction of the access way shall be such that it allows for sheet flow drainage and there is no resulting ponding of water.
- There shall be no concentrated flows without appropriate permanent erosion control measures. Any concentrated flow steeper than 6% shall be armored with stone ditch protection. Contract 2026.12 SP - 23
- There shall be no concentrated flow across the access road.
- Side slopes within 30 feet of the existing travel way shall be 6:1 or flatter, and 4:1 or flatter beyond 30 feet. A minimum of 4" of loam with seed shall be placed on all slopes.

The Contractor shall furnish and apply Method 2 Seeding to all disturbed areas shown on the plans, or as directed by the Resident, and in accordance with Section 618 – Seeding. The Contractor shall furnish and apply hay, straw, or cellulose fiber to cover slopes and other areas with a mulch as shown on the plans or authorized and in accordance with Section 619 – Mulch and any applicable Special Provisions.

As directed by the Resident, the Contractor shall remove all stumps of fallen trees, and dispose of all other remaining debris created during clearing operations.

510.08 Method of Measurement

The following paragraph is added. Special Detour, Construction Access Ways will be paid by the lump sum.

510.09 Basis of Payment

The following paragraph is added.

The accepted Special Detour, Construction Access Way will be paid for at the Contract lump sum price, which shall be full compensation for the respective items, as called for in the Contract, including design and construction of any access ways. Work shall include, but is not limited to material removal, erosion control, temporary and permanent stabilization including riprap, stone ditch protection, erosion control blanket, erosion control geotextile, loaming, seeding, and mulching, removal and resetting fence if needed, and any restoration of temporary access ways. All gravel, recycled asphalt pavement, borrow material, and excavation, including

temporary storage or disposal of excess material, shall be incidental to this item. Removal of stumps and debris remaining from clearing operations, shall be incidental to this item.

Payment will be made under:

| Pay Item | | Pay Unit |
|---|---|---|
| 510.131 | Access Way - Cider Hill Road – MM 6.20 | Lump Sum |
| 510.132 | Access Way - Limerick Road – MM 28.3 | Lump Sum |
| 510.133 | Access Way – Holmes Road - MM 43.0 | Lump Sum |

SPECIAL PROVISION

SECTION 515

PROTECTIVE COATING FOR CONCRETE SURFACES

(Clear Concrete Protective Coating)

Section 515, Protective Coating for Concrete Surfaces, is deleted in its entirety and replaced with the following:

515.01 Description

The work shall include the surface preparation and application of a clear protective coating on concrete surfaces as depicted on the Plans to protect new cast-in-place concrete, precast concrete, masonry structures, existing concrete receiving repairs, and existing concrete exposed by concrete haunch removals. Coating application shall be in accordance with the Plans, Specifications and the manufacturer's published recommendations.

515.02 Materials

The penetrating sealer shall be:

**Certi-Vex Penseal 244-100%**

| | |
|---|---|
| Type | lc Penetrating Silane |
| Min. Appl.Temp. (F) | 20-90 |
| Silanes (%) | 100% silane, alcohol based |
| VOCs (g/L) | < 250 |

**Sikagard 705 L**

| | |
|---|---|
| Type | lc Penetrating Silane |
| Min. Appl.Temp. (F) | 40-95 |
| Silanes (%) | 100% silane, alcohol based |
| VOCs (g/L) | 100 |

**SIL-ACT ATS-100 LV Silane**

| | |
|---|---|
| Type | lc Penetrating Silane |
| Min. Appl.Temp. (F) | 40-110 |
| Silanes (%) | 100% silane, alcohol based |
| VOCs (g/L) | < 250 |

**SIL-ACT ATS-300**

| | |
|---|---|
| Type | lc Penetrating Silane |
| Min. Appl.Temp. (F) | 20-110 |
| Silanes (%) | 100% silane, solvent based |
| VOCs (g/L) | 242 |

The product shall comply with regulations limiting the Volatile Organic Compound (VOC) content of architectural and industrial maintenance coatings.

The Contractor shall submit the product's data sheets, material safety data sheets and recommended instructions for application.

Materials shall be delivered to the site in original packages or containers bearing the manufacturer's labels and identification.

515.03 Surface Preparation

All caulking, patching, and joint sealant shall be installed prior to application of the sealer. On new surfaces to be treated, all voids shall be dressed by dry rubbing to remove form marks and blemishes to present a neat appearance. Concrete and masonry surfaces shall be cleaned free of dust, surface dirt, oil, efflorescence and contaminants to ensure penetration of the sealer.

The Contractor may use, when required, appropriate cleaning materials recommended by the sealer manufacturer in conjunction with high pressure water for cleaning the concrete or masonry.

515.04 Application

The Contractor shall apply the clear concrete protective coating in strict accordance with the manufacturer's published recommendations.

The work shall not be conducted when there is a chance of the surface temperature falling below minimum allowable temperature in the 24-hours following application; nor should it be applied on hot, windy days.

The treatment shall not be applied during rain to wet surfaces. It shall not be applied when winds are sufficient to carry airborne chemicals. Product shall be cured per the manufacturer's recommendations.

Prior to applying the sealer, the Contractor shall protect all surrounding non-masonry/non-concrete surfaces, landscape and lawn areas, and surfaces not designated for treatment, from contact with the penetrating sealer, and prevent overspray of the penetrating sealer caused by wind drift.

The Contractor shall ensure that all safety equipment, facilities and precautions recommended by the product manufacturer are furnished and/or strictly adhered to.

The sealer material shall be applied in the manner and with the equipment recommended by the product manufacturer. Coverage will vary depending on condition, texture and porosity of the surfaces. Pre-testing is required to determine acceptability of the procedure.

Sealer shall be applied as packaged without dilution or alteration. Sufficient material shall be applied to thoroughly saturate the surface making sure to brush out excess material that does not penetrate.

When the sealer is applied to horizontal surfaces, it shall be applied in a single saturating application with sufficient material and applied so the surface remains wet for one to two minutes before penetration into the concrete. Surface residues, pools and puddles shall be broomed-out thoroughly until they completely penetrate into the surface.

When the sealer is applied to vertical and sloped surfaces, it shall be applied in a "wet-on-wet" application for best results on most porous materials. In the case of extremely dense concrete, it may be necessary to restrict the amount of material applied to one saturating application in order to prevent surface darkening.

515.05 Method of Measurement

Clear Protective Coating for Concrete Surfaces will not be measured separately for payment but shall be incidental to related contract items.

# SPECIAL PROVISION

## SECTION 526

## CONCRETE BARRIER

(Temporary Barrier Markers)

### 526.1 Description

The following paragraphs are added:

This work shall consist of furnishing, installing and maintaining temporary barrier markers on all temporary barrier supplied by the Contractor and the Authority.

### 526.2 Materials

The following paragraphs are added:

Temporary barrier markers shall be "Big Dog" barrier markers manufactured by Custom Products Corporation, or approved equal. Markers shall be bi-directional with a minimum effective reflective area of 96 square inches (48 square inches each side) as approved by the Resident. The reflectors shall meet MUTCD reflectivity requirements and shall be orange in color.

### 526.3 Construction Requirements

The following paragraphs are added:

Temporary barrier markers shall be mounted as follows:

1. One on every fourth barrier in tangents and one on every two barriers in tapers, including all barrier furnished by the Contractor.

2. Delineators shall be physically adhered so as to withstand the force of throw from a snow plow.

3. If more than 25% of delineators in any 50 foot section of barrier fall off for any reason, the Contractor will be responsible for reinstalling all the delineators in that run at that their own cost.

4. Contractor is required to submit the installation method for review and approval to the Resident.

### 526.4 Method of Measurement

The following paragraphs are added:

Temporary barrier markers shall not be measured for payment separately but shall be incidental to Maintenance of Traffic Devices Pay Item.

526.5 Basis of Payment

The following paragraphs are added:

Temporary barrier markers shall not be paid for separately but shall be incidental to Maintenance of Traffic Devices Pay Item.

# SPECIAL PROVISION

## SECTION 526

## CONCRETE BARRIER

(Temporary Concrete Barrier Type I - Supplied by Authority)

### 526.01 Description

The following paragraphs are added:

This work shall consist of loading, transporting, setting, resetting, removing, transporting and stacking Temporary Concrete Barrier Type I – Supplied by Authority. The barrier shall have attachments allowing individual sections to be connected into a continuous barrier.

The work also includes supplying connecting pins and furnishing and mounting retro-reflective delineators, per Subsection 526.02 and 526.03.

Concrete barriers supplied by Authority shall be available at the following location(s):

| Maintenance Area | Linear Feet of Barrier |
|---|---|
| Kennebunk Maintenance Area Mile 25.3 | 1350 LF |
| Crosby Maintenance Area Mile 45.8 Southbound | 1350 LF |

Upon substantial completion of work, the Contractor shall remove and transport the barrier back to its maintenance area of origin. All barrier shall be returned, sorted and stacked according to type in locations directed by the pro ject Resident or maintenance area foreman.

### 526.02 Materials

The following paragraphs are added:

e. Delineators shall be bi-directional with a minimum effective reflective area of eight square inches as approved by the Resident. The reflectors shall be methyl methacrylate and the housing of acrylonitrile butadiene styrene. Color shall be in accordance with the MUTCD.

### 526.021 Acceptance

The Resident shall have the authority to accept or reject all Temporary Concrete Barrier Type I – Supplied by Authority used on the Project that does not meet the requirements of this specification

### 526.03 Construction Requirements

The following paragraphs are added:

The Contractor shall notify the Resident prior to the scheduled pick-up and delivery of concrete barrier. No barrier shall be removed from or stacked at the Turnpike Maintenance Area without approval of the Resident.

The Contractor shall move and place barrier-utilizing methods that will not damage the barrier. Barrier that is damaged by the Contractor by failing to use proper methods shall be replaced by the Contractor at no additional cost to the Maine Turnpike Authority.

Concrete barrier supplied by the Authority consists of several different styles. Not all barriers may be compatible. The Contractor shall utilize caution when setting barrier to use identical barrier types as adjacent barrier. Non-compatible barrier that cannot be attached together shall be overlapped by a minimum of 10 feet with the blunt end on the non-traffic side of the barrier. This work will not be measured separately for payment, but shall be incidental to the concrete barrier.

Concrete barrier placed at roadway low points shall be shimmed on 1" by 2" by 2' long wood planks to allow drainage to pass under the barrier. In addition, the Resident may direct the Contractor to shim the concrete barrier at other locations to provide for proper roadway drainage. All labor, material, and equipment necessary to shim the barrier will not be measured separately for payment, but shall be incidental to the Concrete Barrier.

The removal of concrete barrier from adjacent to the travel lane may be conducted without a lane closure if it is accomplished in accordance with the following requirements:

1. Barrier is removed from the trailing end and the workmen and equipment involved in the operation are always behind the barrier. No workmen or equipment shall enter the travel lane.
2. Barrier shall be dragged away from the travel lane to at least a 30-degree angle by the use of a cable.
3. Barrier shall be lifted no more than six inches while within 10 feet of the travel lane.

Retro-Reflective Delineators shall be mounted as follows:

1. One on top of each barrier.
2. One on the traffic side of every barrier used in a taper.
3. One on the traffic side of every other barrier at regularly spaced intervals and locations.
4. Delineators shall be installed on both sides of the barrier if barrier is used to separate opposing traffic.
5. Delineators shall be physically adhered so as to withstand the force of throw from a snow plow.
6. If more than 25% of delineators in any 50 foot section of barrier fall off for any reason, the Contractor will be responsible for reinstalling all the delineators in that run at that their own cost.
7. Contractor is required to submit the installation method for review and approval to the Resident.

526.04 Method of Measurement

The following paragraphs are added:

Temporary Concrete Barrier Type I – Supplied by Authority shall not be measured separately for payment but shall be incidental to the related Maintenance of Traffic Control Devices Pay Item.

The loading, transporting, setting, resetting, removing, transporting, sorting and stacking of the barrier, the furnishing, installation and maintenance of the barrier delineators, and furnishing and installing connector pins will not be measured separately for payment, but shall be incidental to the cost of the Barrier. Temporary storage of Concrete Barrier between construction phases, if required, will not be measured separately for payment, but shall be incidental to the cost of the Barrier. All equipment required to load, unload, transport and stack Concrete Barrier shall be supplied by the Contractor.

Any Barrier lost or damaged by the Contractor shall be replaced by the Contractor at no additional cost to the Authority.

526.05 Basis of Payment

The fifth paragraph is deleted and not replaced.

The following paragraphs are added:

Temporary Concrete Barrier Type I – Supplied by Authority will not be paid for directly but shall be incidental to the related Maintenance of Traffic Control Devices Pay Item 652.361. Such payment shall be full compensation for loading, transporting, setting, resetting, temporary storage, removing, transporting and stacking at the area designated, furnishing all materials, and all other incidentals necessary to complete the work. Temporary Concrete Barrier Type I – Supplied by Authority and all connecting pins shall remain the property of the Authority, and shall be returned to the Turnpike Maintenance Area as designated in Subsection 526.01.

# SPECIAL PROVISION

## SECTION 526

## CONCRETE BARRIER

(Median Barrier – Type C)

### 526.01 Description

This Section is deleted and replaced with the following:

This work shall consist of furnishing, constructing, erecting, and setting permanent concrete barrier and associated elements on granular base material in accordance with these Specifications and the lines and grades shown on the Plans or established by the Resident. The length of each precast barrier segment shall be in accordance with the parameters shown on the Plans.

The Contractor shall be responsible for installing the barrier to the elevations shown on the plans, and with the required depth of embedment required to achieve the specified elevation. The Contractor is advised that the finished pavement elevation on either side of the barrier will not be equal at all locations, and that the depth of barrier embedment will vary.

The work shall also be completed in accordance with Supplemental Specification 502, Structural Concrete, and Standard Specification 534, Precast Structural Concrete, as referenced herein.

The work shall also include the application of Clear Protective Coating for Concrete Surfaces to all concrete surfaces exposed in the final condition, including the ends of barrier segments, in accordance with Supplemental Specification 515. Clear protective coating shall be applied all required repairs and final finishing of the barrier is complete and accepted.

Median Barrier – Type C – Single face single slope precast concrete barrier 1’-9 3/8” wide at the base, 59½” high, and 54” reveal as shown on the Plans. A structural tube and I-beam connection detail is provided at each end.

### 526.02 Materials

The second paragraph is deleted in its entirety and replaced with the following:

Concrete for precast components shall be in accordance with Special Provision 502 Median Barrier Concrete.

Concrete for cast-in-place components shall be Class AAA (without synthetic reinforcement) in accordance with Supplemental Specifications, Section 502.05, Composition and Proportioning, with a minimum compressive strength of 4,500 psi and an air entrainment of 6.5% ±1%.

Steel components and hardware for barrier connection assemblies shall be in accordance with MaineDOT Standard Specification 504. All barrier connection assemblies shall be hot dip galvanized after fabrication in accordance with ASTM A123 or A153, as applicable.

All reinforcing steel for concrete barrier shall be epoxy coated. Reinforcing steel shall be fabricated and placed in accordance with the Standard Specifications, Section 503.

Reflective delineators for concrete median barrier shall meet the requirements of Special Provision 645, Highway Signing.

Clear Protective Coating for Concrete Surfaces shall be in accordance with Supplemental Specification 515.

526.03 Construction Requirements

The first paragraph, including items "a" through "c", and the second paragraph are deleted and replaced with the following:

All cast in place components shall be constructed in accordance with the provisions of Supplemental Specification 502, Section 502.05, Composition and Proportioning, through Section 502.15, Curing Concrete, inclusive. Concrete barrier shall not be formed using slip forming methods.

All precast components shall be constructed in accordance with the provisions of Standard Specification 534, Section 534.05, Facilities for Inspection, through Section 534.10, Forms, inclusive, as well as Section 534.12, Inserts, through Section 534.20, Installation of Precast Units, inclusive. The provisions of Standard Specification Section 712.061, Structural Precast Concrete Units, exclusive of material requirements, shall apply. Concrete barrier shall not be formed using slip forming methods.

The following paragraphs are added after the fourth paragraph:

d. Sections of barrier shall be uniform in color and in good condition, free from cracked or spalled surfaces.

e. Defects shall be divided into two categories, minor defects and major defects. Minor defects in the barrier may be repaired in the field. Major defects shall be cause for rejection of the section or, at the Authority's sole discretion, the section shall be repaired in a manner directed by the Resident.

   Minor defects are defined as holes, honeycombing or spalls which are 6 inch or less, in diameter, and which do not expose the outermost surface of the steel reinforcement. Surface voids 3/8 inch, or less, in diameter and 3/8 inch, or less, in depth are not considered defects and do not require repair.

   Major defects are defined as any defect which does not meet the definition of a minor defect or minor defects which, in aggregate, comprise more than 1% of the surface area of the barrier section.

The repair of hardened concrete shall be completed prior to the application of clear protective coating and shall be completed as follows:

- Minor Defect Repair: Repairs shall be made with a fast set non-shrink patching material included on MaineDOT's list of prequalified materials. Methods of repair shall be acceptable to the Resident. The color of the repaired portion shall match as nearly as practicable, the color of the surrounding concrete. Repaired portions shall match shape and tolerance requirements.
- Major Defect Repair: Major defect repair shall be submitted for review and approval and shall not commence unless pre-approved by the Engineer.

The following paragraphs are added at the end of this section:

f. All barrier segments, whether precast or cast-in-place, shall be uniform in color and in good condition, free from cracked or spalled surfaces and free from excessive surface air voids.

The layout and placement of the concrete barriers shall be to the alignment and elevations shown on the Plans, approved working drawings, or as directed by the Resident. Before any barrier or transitions may be placed, the subbase shall be compacted to 95 percent density and fine graded to a tolerance of ±1/2 inch of the true grade at any location under the barrier. The following placement tolerances shall be met:

- Elevation tolerance: +/- ¼" from plan elevation
- Longitudinal placement tolerance: +/- ½" from plan location
- Transverse placement tolerance: +/- ½" from plan location

The Contractor shall be responsible for installing the barrier to the elevations shown on the plans, and with the required depth of embedment required to achieve the specified elevation. The Contractor is advised that the finished pavement elevation on either side of the barrier will not be equal at all locations, and that the depth of barrier embedment will also vary.

Clear protective coating shall be applied all required repairs and final finishing of the barrier is complete and accepted.

526.031 Submittals

The Contractor shall collect any necessary field data to supplement the Plans, including ground survey and field measurements, required for the development of shop drawings. The Contractor shall submit shop drawings, for approval by the Resident, showing the fabrication details and quantities of each proposed barrier section in accordance with Section 105.7, Working Drawings, and Section 526.031, Submittals. Additionally, working drawings for precast elements shall be submitted in accordance with Standard Specification 535.03, Drawings. The shop drawings shall include information covering materials and their properties, lifting devices, storage and handling requirements, reinforcing layout, protective coating information, geometric dimensions, quantity of pieces, overall length of pieces, and all other information necessary to fabricate the pieces in accordance with the Plans and Specifications.

526.04 Method of Measurement

The following paragraphs are added:

All Median Barrier, Types C, will be measured for payment by the lump sum satisfactorily completed and in place as shown on the Plans.

The application of Clear Protective Coating for Concrete Surfaces will not be measured for payment separately but shall be incidental to the related barrier pay items.

526.05 Basis of Payment

The following paragraphs are added:

The Contract Lump Sum price for median barrier Types C shall be full compensation for: preparing shop drawings; performing field layout; furnishing all materials, labor, supplies, and equipment; casting; delivery; installation; reflective delineators; application of Clear Protective Coating for Concrete Surfaces; and other all incidentals necessary to complete the work.

All associated earthwork and pavement restoration, including saw cutting, excavation, furnishing and placing bedding and gravel materials, compaction, fine grading, tack coat, and asphalt pavement, shall be incidental to this item and will not be measured or paid for separately

Payment will be made under:

| Pay Item | | Pay Unit |
|---|---|---|
| 526.353 | Median Barrier – Type C | Lump Sum |

# SPECIAL PROVISION

## SECTION 527

## ENERGY ABSORBING UNIT

(Work Zone Crash Cushion)
(Resetting Existing Work Zone Crash Cushions)

### 527.01 Description

The first paragraph is deleted in its entirety and replaced with the following:

The Contractor shall furnish and install, or reset work zone crash cushions where shown on the Plans, as specified herein, in Special Provision 652, or as approved by the Resident. Work zone crash cushions are required at each exposed end of temporary concrete barrier or guardrail.

The exposed end of the concrete barrier within 30 feet of the mainline travel lane shall be protected at all times. Barrier shall not be reset until after the work zone crash cushion(s) has been set to protect the exposed end of the barrier.

### 527.02 Materials

The following paragraph is added:

Work zone crash cushions fabricated prior to December 31, 2019 in serviceable condition shall meet the requirements of NCHRP 350 TL-3 crash test requirements and work zone crash cushions fabricated after December 31, 2019 shall meet the MASH TL-3 crash test requirements for use on the turnpike and local roadways with posted speeds of 45 MPH or greater. Work zone crash cushions fabricated prior to December 31, 2019 shall meet in serviceable condition shall meet the requirements of NCHRP 350 TL-2 crash test requirements and work zone crash cushions fabricated after December 31, 2019 shall meet the MASH TL-2 crash test requirements for use on local roadways with posted speeds of 40 MPH or less. The Contractor shall provide the Resident with documentation of the proposed work zone crash cushion's MASH Crash Test Results prior to installation at the jobsite.

### 527.03 Construction Requirements

The following is added to the end of the first paragraph:

The design speeds for work zone crash cushions shall be 45 mph for local road and 70 mph for turnpike roadways unless otherwise noted on the Plans.

### 527.04 Method of Measurement

Work Zone Crash Cushions used to protect exposed ends of guardrail for steel girder erection will not be measured separately for payment but shall be included under the Maintenance of Traffic item.

Replacement barrels, after collisions, will be paid for as a percentage of the individual barrels damaged to the total barrels in the complete system. The removal of impacted barrels and debris will be considered incidental to the replacement barrels. Barrels on hand, but unused will not be paid for directly.

Resetting Existing Work Zone Crash Cushion will be measured by the Unit, complete in place and accepted.

527.05 Basis of Payment

Resetting Existing Work Zone Crash Cushion will be measured by the Unit, complete in place and accepted.

Payment will be made under:

| Pay Item | | Pay Unit |
|---|---|---|
| 527.341 | Work Zone Crash Cushions – TL-3 | Unit |
| 527.342 | Work Zone Crash Cushions – TL-2 | Unit |
| 527.343 | Resetting Existing Work Zone Crash Cushion | Unit |

SPECIAL PROVISION

SECTION 606

GUARDRAIL

(Guardrail – Remove, Modify and Reset, Single Rail)
(Guardrail – Remove, Modify and Reset, Double Rail)
(Guardrail – Remove, Modify and Reset, Thrie Beam)
(Guardrail - Remove and Stack)
(Guardrail Adjust – Single Rail)
(Guardrail Adjust – Double Rail)

606.01 Description

The following paragraphs are added:

This work shall also consist of adjusting the height of the existing single, thrie, and double rail guardrail in locations where the existing height of rail is not 30 inches or as needed for construction access. The guardrail shall be adjusted to a height of 30 inches. Existing MASH compliant guardrail shall be adjusted to a height of 31 inches. Existing single, double, and thrie rail shall also be adjusted for lean.

The guardrail adjustment shall take place at all necessary as needed for construction access or as shown on the plans. Exact locations for adjustment shall be determined by the Resident. If, during the course of the work, the contractor finds additional rail to be adjusted, then he shall notify the Resident, and the Resident determine if the rail is to be adjusted.

This work shall also include surveying existing median guardrail systems designated for removal and resetting to facilitate construction access. Prior to removal of any guardrail, the Contractor shall perform a survey of the existing guardrail alignment and provide survey documentation to the Resident for review and acceptance.

The survey shall include, at a minimum, the horizontal location of the guardrail alignment, the beginning and ending limits of removal, and the location of terminal sections, transitions, posts, and other components necessary to accurately reestablish the existing installation.
No median guardrail designated for removal and reset shall be removed until the required survey documentation has been submitted to and accepted by the Resident.

Following completion of the work requiring access, the guardrail shall be reset to the same alignment, location, and configuration that existed prior to removal, unless otherwise directed by the Resident.

The Contractor shall be responsible for all labor, materials, survey work, and incidentals necessary to remove, document, store, and reset the guardrail system in its original location. Any discrepancies between the documented preconstruction location and the reset installation shall be corrected at no additional cost to the Authority.

This work shall also consist of removing, stockpiling and stacking of existing single and double guardrail elements, component parts and hardware suitable for replacement as approved by the Resident. At the completion of the Contract, any unused guardrail elements, posts, component parts and hardware suitable for reuse shall remain the property of the Authority. Any guardrail elements, posts, component parts and hardware unsuitable for reuse shall become property of the Contractor.

Stockpiled materials, suitable for reuse, shall be utilized on Remove, Modify and Reset items prior to new materials being paid for.

Guardrail materials may be temporarily stockpiled at the Kennebunk Maintenance Facility at Mile 25.3 or Crosby Maintenance Facility at Mile 45.8 Southbound

This work shall consist of removing, disposing of existing guardrail elements, component parts and hardware, as directed by the Resident. All materials shall become the property of the Contractor and shall be removed from the site at the completion of the Project. The Contractor shall provide the Resident with an affidavit stating the final location of all disposed material and that the material was disposed of in accordance with the Maine Department of Environmental Protection Solid Waste Regulations.

606.02 Materials

The following paragraph is added at the end of the subsection:

New non-wood offset blocks conforming to NCHRP 350 Test Level 3 shall be installed on all guardrail being reset. The existing steel offset brackets and backup plates shall become the property of the contractor.

The following Subsection is added:

606.021 General

All existing guardrail to be raised or lowered shall be completed prior to new guardrail or end treatments being attached.

606.036 Adjusting Existing Guardrail

Any materials or galvanizing damaged by the Contractor's operations shall be replaced or touched-up at no additional cost to the Authority.

Guardrail posts shall be raised to a minimum of five inches above final elevation prior to driving post to final elevation; this applies to both raising and lowering rail.

Any given length of guardrail to be adjusted shall be done in such a way that top of rail elevations do not vary drastically between each section of guardrail. Rail height tolerance shall be 30 inches, plus 0 inches, minus 1/2 inch. The 30 inches shall be measured from the edge of pavement to the top of rail beam when within 2 feet of the edge of pavement.

Rail shall be adjusted for lean where needed. All posts shall be plumb after adjusting for lean.

When the rail tapers from one bound to the other the rail shall be adjusted to the correct height on the farthest ends and shall be adjusted towards the center of the median to create a smooth line.

Earth around each adjusted or reset post shall be raked and compacted with a minimum 8 pound hand tamper or an approved device. Holes created due to adjusting or resetting a post shall be filled with a similar surrounding material and compacted.

606.08 Method of Measurement

The following paragraphs are added:

Adjusting of both single and double rail guardrail shall be measured by the linear foot of Guardrail adjusted and accepted.

Raking and compacting the earth around each reset post with a minimum 8 pound hand tamper or an approved device, and infilling and compacting holes created due to resetting posts with a similar surrounding material wil not be paid separately, but shall be incidental to the Guardrail - Remove, Modify and Reset Pay or Guardrail - Adjust pay items.

Guardrail Remove and Stack will be measured on a linear foot basis of guardrail satisfactorily removed and stockpiled whether single rail or double rail. Single and double twisted end sections will be measured for payment on a linear foot basis as 25 feet of guardrail removed.

Guardrail removed and not reset or stacked shall be incidental to Contract Items and include all removal, disposal, equipment and labor necessary to satisfactorily complete the work.

Steel posts to replace damaged posts shall come from the stockpile of guardrail components to be disposed of, from this Contract and will not be measured separately for payment. If, in the opinion of the Resident, there are no suitable steel posts in the stockpile then steel posts will be measured for payment.

W-beam rail elements to replace damaged rail elements shall come from the stockpile of guardrail from the Remove and Stack or the guardrail to be disposed of from this Contract and will not be measured separately for payment. If, in the opinion of the Resident, there are no suitable W-beam rail elements in the stockpile then the W-beam rail elements will be measured for payment.

606.09 Basis of Payment

The following paragraphs are added:

Adjusting of single, double, and thrie rail guardrail will be paid for at the Contract unit price per linear foot and shall be full compensation for furnishing all labor, equipment and materials necessary to complete the work. Guardrail Adjust will not be measured for payment until all compaction has been completed.

The accepted quantity of guardrail removal will be paid for at the Contract unit price bid, which price shall be full compensation for removing, transporting and stacking all guardrail elements, component parts and hardware, equipment, labor and all incidentals necessary to complete the work. No additional payment will be made for double rail.

Payment will be made under:

| Pay Item | | Pay Unit |
|---|---|---|
| 606.3605 | Guardrail – Remove, Modify, and Reset Single Rail | Linear Foot |
| 606.3606 | Guardrail – Remove, Modify, and Reset Double Rail | Linear Foot |
| 606.3607 | Guardrail – Remove, Modify, and Reset Thrie Beam | Linear Foot |
| 606.369 | Guardrail - Remove and Stack | Linear Foot |
| 606.3621 | Guardrail Adjust, Single Rail | Linear Foot |
| 606.3622 | Guardrail Adjust, Double Rail | Linear Foot |

# SPECIAL PROVISION

## SECTION 606

## GUARDRAIL

(Single Offset Block – W-Beam)
Single Offset Block - Thrie-Beam)
(Asymmetrical Thrie Beam Transition)

### 606.01 Description

The following paragraph is added:

This work shall consist of furnishing and installing single offset blocks at all existing guardrail beam locations that are not part of a new or remove, modify and reset location and as shown on the Contract Documents. New NCHRP 350 compliant offset block shall be installed on existing galvanized steel posts and connected to Guardrail Type 3d and Thrie Beam Rail.

This work shall consist of removing and stacking existing Thrie Beam Transition panels, furnishing and installing the Asymmetrical Thrie beam to W-beam Transition panels, single rail - modified section and double rail modified section, connecting it to the existing or proposed W-Beam guardrail and Thrie Beam modified at locations on the Maine Turnpike, as shown on the Plans or as approved by the Resident. All guardrail components shall have passed the NCHRP 350 Test Level 3. Composite offset blocks shall be used.

### 606.02 Materials

The following sentences are added:

Offset blocks shall have passed NCHRP 350 Test Level 3 and shall not be wood.

The following Subsection is added:

### 606.021 General

The existing median guardrail posts have four off-center bolt holes used to attach the existing steel offset blocks. The new offset blocks have two bolt holes centered on the W-beam section. The existing posts must be retrofitted to receive the new non-wood offset block assembly. Additional bolt holes required in the existing posts shall be drilled or punched but the size shall not exceed the dimension given by the manufacturer. Metal around the holes shall be cleaned and painted with a cold-applied zinc-rich paint. The holes shall not be burned with a torch.

The completed guardrail system shall be in conformance with the NCHRP 350 Test Level 3 requirements.

606.08 Method of Measurement

The following paragraphs are added:

Single Offset Block - W-Beam and Single Offset Block - Thrie Beam shall be measured per each unit installed and accepted.

Asymmetrical Thrie Beam Transition shall be measured by each unit installed and accepted.

606.09 Basis of Payment

The following paragraphs are added:

New Single Offset Block - W-Beam and Single Offset Block - Thrie Beam furnished and installed at specified locations will be paid for at the Contract unit price each complete in place and accepted. Payment shall be full compensation for furnishing all labor, equipment and materials necessary to complete the work including, but not necessarily limited to, removal of existing rail beam, removal and disposal of existing offset block, drilling new holes in existing post, application of galvanized paint, furnishing and installing new non-wood offset block, removal and disposal of back-up plates, and resetting the rail beam.

Asymmetrical Thrie Beam Transition will be paid for at the Contract unit price each complete in place, and shall be full compensation for furnishing all labor, equipment and materials necessary to complete the work consisting of, but not necessarily limited to, furnishing and installing the Asymmetrical Thrie Beam to Existing W-beam Transition, Single Rail - Modified Section and Existing Double Rail – Modified Section, and all detailed accessories; furnishing and installing all required posts, composite offset blocks, cables, nuts, bolts, washers, and all other items necessary to complete the installation and connection to the existing or proposed W-Beam and the Thrie Beam – Modified.

Payment will be made under:

| Pay Item | | Pay Unit |
|---|---|---|
| 606.471 | Single Offset Block – W-Beam | Each |
| 606.472 | Single Offset Block – Thrie Beam | Each |
| 606.701 | Asymmetrical Thrie Beam Transition | Each |

# SPECIAL PROVISION

## SECTION 613

## EROSION CONTROL BLANKET

### 613.01 Description

This work shall also include seeding, mulching and watering the median swale and/or longitudinal flow line to the limits and width as shown on the Plans or as directed by the Resident.

### 613.02 Materials

The following sentences are added:

Seeding shall meet the requirements of Section 618, Seeding, Method Number 2.

Mulch shall meet the requirements of Section 619.

The following Subsection is added:

### 613.041 Maintenance and Acceptance

See Section 618.10 for maintenance and acceptance of seeding.

### 613.042 Mulch

All mulch shall be placed after the area has been seeded and prior to the installation of the Erosion Control Blanket.

### 613.09 Basis of Payment

The following "and mulch" is added after the words "initial seeding" in the second sentence.

Erosion Control Blanket shall not be paid for separately but shall be incidental to Temporary Soil Erosion and Water Pollution Control Lump Sum Item.

# SPECIAL PROVISION

## SECTION 619

## MULCH

(Temporary Mulch)

### 619.01 Description

The first paragraph is modified by the addition of the following:

"as a temporary or permanent erosion control measure" after the word "mulch".

Add the following sentence at the end of the first paragraph:

Refer to Section 656 Temporary Soil and Water Pollution Control, for more information on Temporary Mulch.

### 619.03 General

The first paragraph is deleted and replaced with the following:

Cellulose fiber mulch shall not be used within 200 feet of a wetland or stream. The limits shall be 200 feet up station and down station of the wetland or streams as well as the slopes adjacent to the stream. The application of hay or straw mulch with an approved binder shall be used at these locations to prevent erosion.

The use of cellulose fiber mulch will only be allowed at other areas with the approval of the Resident. The Contractor may be required to demonstrate that the material may be applied in a manner that will prevent erosion and will aid in the establishment of permanent vegetation. The Resident reserves the right to require the use of hay or straw mulch at all locations if he determines that the cellulose mulch is ineffective. Cellulose fiber mulch is not acceptable for winter stabilization.

### 619.06 Method of Measurement

Temporary Mulch shall not be paid for separately but shall be incidental to Temporary Soil Erosion and Water Pollution Control Lump Sum Item.

### 619.07 Basis of Payment

Temporary Mulch shall not be paid for separately but shall be incidental to Temporary Soil Erosion and Water Pollution Control Lump Sum Item.

SPECIAL PROVISION

SECTION 626

FOUNDATIONS, CONDUIT, AND JUNCTION BOXES
FOR HIGHWAY SIGNING, LIGHTING AND SIGNALS

(Horizontal Directional Drilled Conduit)

626.01 Description

Horizontal Directional Drilling (HDD) method shall be used for installation of non-metallic conduit for electrical and communication conduit when specified on the project plans or approved by the Resident. It shall include furnishing of all materials, site preparation, equipment setup, pilot bore, conduit pulling through the drilled bore, installation of pull wire and fittings, site restoration, and incidental work necessary to satisfactorily install conduit at the required locations and depths.

626.02 Materials

Conduit for Horizontal Directional Drilling shall meet requirements of Section 715.03 for non- metallic conduit. Non-metallic conduit to be installed under roadways shall be Schedule 80 or greater. Non-metallic conduit to be installed in other locations shall be Schedule 80 or greater. Conduit sections shall be joined by methods suitable for installation by HDD. Joined conduit sections must have adequate strength and flexibility to withstand the installation stresses and overburden pressures without compromising the structural stability of the conduit wall. Conduit must be able to meet the bend radius required for the proposed installation. Conduit sections shall be joined in a manner resulting in the inner surfaces being flush and even. PVC End Bells shall be utilized on all conduit ends.

626.03 Construction

Prior to commencing HDD work, the Contractor shall submit a drilling work plan to the Resident for approval addressing the following, at minimum:

- Profile of the proposed bore plotted at a scale appropriate for the crossing and acceptable to the Resident;
- HDD site layout including entry and exit points;
- Drilling fluid management plan, including drilling fluid types and specifications, cleaning and recycling equipment to be used, estimated flow rates, procedures for minimizing drilling fluid escape, and the method and location for final disposal of waste drilling fluids. Material safety data sheets shall be provided for all drilling fluid additives that will be used;
- Conduit storage and handling details;
- Summary of assembly and installation procedures to be used;
- Material safety data sheets of any other potentially hazardous substances to be used;
- Response plans for possible problems that may be encountered;
- Documentation and certification of the ability of the proposed conduit to withstand

installation stresses and pressures.

The HDD drill rig and auxiliary pieces of equipment shall be appropriate for the diameter and length of conduit being installed. The power system shall provide sufficient pressure to power the drilling operations with a hydraulic system free from leakage. The directional drilling machine shall be anchored as necessary to stabilize it against excessive dislocation.

In order to minimize friction and prevent collapse of the bore hole, a soil stabilizing agent (drilling fluid) may be introduced into the annular bore space from the front end of the drill head to create a slurry. The drilling fluids shall be selected or designed for the site's specific soil and ground water conditions. The drilling fluid mixing system shall be self-contained and closed with sufficient size to mix and deliver drilling fluid to the drill head. The mixing system shall continually agitate the drilling fluid during drilling operations. The fluids delivery system shall be capable of pumping drilling fluid with sufficient volume and pressure from the mixing tank through the drill rods to the drill head.

Alignment of the bore shall be accomplished by proper orientation of the drill head as it is pushed through the ground by the drill rig. Orientation and tracking of the drill head shall be determined by using an acceptable tracking system from a transmitter located within the drill head. The HDD guidance system shall be capable of locating and tracking the drill head continuously and accurately both horizontally and vertically during the pilot bore. All equipment shall be properly calibrated before commencing the directional drilling operation. The alignment of the conduit shall remain at least 10 feet below the mainline traffic lanes and ramps at all times.

Borehole diameter relative to the conduit diameter shall be minimized to limit potential damage from soil displacement, settlement, and heaving. When necessary, the pilot borehole may be enlarged by back reaming to accommodate conduit larger than the pilot borehole size. Back reaming may be accomplished ahead of or at the same time as pulling the conduit through the pilot borehole. The back-reamer shall be sized to create a large enough borehole to allow cuttings to transfer from the face of excavation to the surface with minimum soil displacement.

Escaping slurry or drilling fluids shall be confined at the ground surface during pull back or drilling. All drilling fluids shall be disposed of or recycled in a manner acceptable to the Maine Department of Environmental Protection. Upon completion of the HDD operation, the work site shall be cleaned of all excess slurry or spoils. Any damage caused by heaving, settlement, separation of pavement, escaping drilling fluid, or other damage from the directional drilling operation shall be repaired by the Contractor to the satisfaction of the Resident.

At the completion of the HDD conduit installation, the Contractor shall provide to the Resident marked up plans noting location, depth, and material type of all conduit installed by the Horizontal Directional Drilling method.

626.04 Method of Measurement

Horizontal Directional Drilled Conduit will be measured by the number of linear feet of conduit in place and accepted by the Resident.

626.05 Basis of Payment

Payment will be made for the total number of linear feet of Horizontal Directional Drilled Conduit and accepted at the contract price per linear foot. Payment shall include the cost of furnishing and installing the conduit; site preparation and restoration of drilling entry and exit

points; removal of excavated material and drilling spoils; removal and disposal of drilling fluids and excess slurry; pull wire, fittings, grounding and bonding; test cleaning of conduit interior; and all other materials, labor, equipment, and incidentals necessary to complete the work.

Payment will be made under:

| Pay Item | | Pay Unit |
|---|---|---|
| 626.223 | Horizontal Directional Drilled Conduit | Linear Foot |

SPECIAL PROVISION

SECTION 626

FOUNDATIONS, CONDUIT, AND JUNCTION BOXES FOR HIGHWAY SIGNING, LIGHTNING, AND SIGNALS

The following Section is replaced in its entirety:

626.34 Concrete Foundations

Overhead Sign Structure foundations and Wells Exit 19 WB foundation for this project are drilled shafts and have been designed by the Engineer based on assumed loading. The Supplier shall determine the bending moment, shear force, torsion and axial load at the top of each sign support structure foundation as part of their design.

Sign Structure design computations that are part of the Contractor's design submittal shall include the actual loads (bending moment, shear force, torsion and axial load) at the top of each foundation. These actual design loads at the top of each foundation that are provided by the Contractor as part of their submittal will be used by the Authority to check the Engineer's proposed size and design of the drilled shafts. The Contractor shall not commence foundation construction prior to receiving approval from the Authority.

If soil conditions differ materially from those described on the Plans, the Contractor shall stop work on that foundation and contact the Resident.

All unsuitable material (including but not limited to peat, organic material, and material that has been disturbed and/or dumped) within the limits of a foundation shall be removed to the limits directed by the Resident. Drilled shaft depths shall be increased as directed by the Authority to account for the unsuitable material. Drilled shaft foundation holes, except in ledge, shall be excavated by auger method to the neat line of the outside dimensions of the footing without disturbing the soil around or below the proposed footing. Drilled shafts shall not be permanently cased, except for the top 3 feet; concrete shall be cast directly against the surrounding soil. In areas where rock or ledge is encountered above the proposed bottom of foundation, the Contractor will have the option of removing rock and placing the foundation at the design depth shown on the plans, or constructing a grouted rock-anchored foundation system. Rock-anchored foundations shall be constructed according to Standard Detail 626(06) Foundations for Traffic Signals, Highway Signing and Lighting, or as approved by the Department for drilled shafts greater than 30 inches in diameter.

Concrete for drilled shafts shall be placed as soon after excavation as practicable to prevent debris from collecting in the excavated area. The Contractor shall provide temporary dewatering of excavations for foundations such that concrete is placed in the dry. Concrete for drilled shafts shall be placed by tremie methods as temporary casing is withdrawn to prevent debris from contaminating the foundation and to ensure concrete is cast against the surrounding soil.

Concrete for drilled shafts shall be Class AAA in accordance with Maine Turnpike Authority Supplemental Specification Section 502 - Structural Concrete. Precast foundations will not be permitted.

Before placing concrete, the required elbows of entrance conduits, reinforcing steel and anchor bolts shall be carefully positioned. The anchor bolt size and the bolt circle diameter shall be determined from data furnished by the supplier of the sign structures or as shown on the plans. All other anchor bolts shall be a minimum of 1 inch diameter and shall project sufficiently to accommodate the thickness of the base plus all nuts and washers. The bolt length shall also be sufficient to allow clearances of approximately ½ inch below the leveling nut and ¼ inch above the top nut. At least two threads on each anchor bolt shall project beyond the outside of the nuts holding the plumbed pole.

The finished ground at each foundation shall be graded as shown on the Plans. If required, approved backfill material shall be added to grade the slopes as specified. There will be no additional compensation for furnishing, placing and compacting material flush around the foundation. In all cases, the surface area around the foundations shall be graded to drain away from the foundation and loamed and seeded in accordance with the requirements of Section 615 and Section 618.

Concrete foundations designated to be modified or removed shall be modified or removed as shown on the plans. Debris resulting from the modification or removal shall be removed from the project. Once removal has been completed, the area shall be brought to grade by addition of granular material and loam, or by loam only, depending on the extent of modification or removal. The area shall then be seeded in accordance with Section 618.

The concrete portion of the foundations exposed to view shall have a troweled finish. A drainage groove shall be formed in the horizontal surface of the foundation. The top of the concrete foundation shall be horizontal.

When the anchor bolt template is removed, the threads of the anchor bolts shall be greased and protected with a metal sleeve, held in position with nuts and washers to be furnished with the bolts. This thread protection shall remain in place until the pole or other equipment is installed.

A copper-clad steel ground rod shall be installed outside the foundation where shown on the plans or required by the National Electrical Code (NEC).

626.04 Method of Measurement

Drilled shaft foundations will be measured by the theoretical cubic yard volume of the foundation based upon diameters and lengths shown in the plans.

626.05 Basis of Payment

The accepted quantity and/or volume of foundations will be paid for by the cubic yard. This payment shall include: excavation, placing concrete, granular backfill to grade, anchor bolts, reinforcing steel, conduit within the foundation and extending 12 inches from the foundation, loam, seeding, mulching, and all incidentals necessary to complete the work.

Payment will be made under:

| | | |
|---|---|---|
| 626.332 | 30-inch Diameter, greater than 8-feet long, and all 36-inch and 42-inch Diameter foundations | Cubic yard |

SPECIAL PROVISION

SECTION 626

FOUNDATIONS, CONDUIT, AND JUNCTION BOXES FOR HIGHWAY SIGNING, LIGHTING, AND SIGNALS

626.02 Materials

First sentence of second paragraph shall be replaced:

All electrical equipment shall conform to NEMA or UL standards and conduit used for conductors shall conform to NEMA, UL or EIA standards and listed certification by a Nationally Recognized Testing Laboratory.

626.031 Conduit

The third paragraph shall be deleted and replaced with:

All junction or pull boxes shall be vehicle rated with a minimum design load of 22,000lbs and installed as shown on the plans. Junction boxes for the VMS electrical and communication conduit associated with the project shall be polymer concrete as manufactured by QUAZITE® a division of Hubbell Power Systems, or an approved equal. The boxes shall be 36" x 24" and 24" deep unless noted otherwise on the plans. The words ELECTRICAL or COMMUNICATION shall be stamped on the cover as noted in the Plans or directed by the Resident. All existing junction boxes in useable condition shall be removed and stacked as directed by the Resident Engineer.

Junction boxes for the electrical associated with highway lighting shall be polymer concrete as manufactured by QUAZITE® a division of Hubbell Power Systems or an approved equal. The boxes shall be 18" x 11" and 18" deep. New boxes shall have the word ELECTRICAL stamped on the cover as noted in the Plans or directed by the Resident. The boxes shall have a 15,000-lb. load rating.

The fourth paragraph shall be deleted and replaced with:

Where conduits enter exposed junction boxes, they shall be sloped to drain towards the conduit entrance holes, unless otherwise directed. All conduit ends in exposed junction boxes or in concrete foundations shall be fitted with bell ends. Weep holes of ¼ inch diameter shall be placed in all pull boxes, junction boxes, and fuse boxes. A 3-inch Schedule 40 PVC drain pipe shall be installed projecting 3" into the gravel bedding and extend until daylight at a minimum of 0.5% slope draining away from the junction box. A critter guard shall be installed at the open end of the drain pipe.

The following shall be added to the end of the fifth paragraph:

Prior to backfilling of the trench, the conduits shall be GPS located per Special Provision 105.11 – As-Built Plans. During the backfilling of the trench, a "buried conduit" warning tape shall be placed above the conduit. This warning tape shall be capable of being located by a cable locator

and shall be labeled and colored as appropriate to the type of utility the conduit is intended for.

626.033 Polyvinylchloride Conduit Installation

The following paragraph shall be added:

Exposed conduit shall be rigidly and securely fastened with acceptable fasteners or supports, as indicated on the plans or approved. Except as otherwise authorized, fasteners or supports shall be of stainless steel and not placed more than 6 feet apart on centers, except as otherwise authorized. Conduits shall generally be supported by an approved spacer at the point of support, so that there is an air space between the conduit and the supporting surface. Ends of conduit runs terminating in any box without a threaded hub shall be provided with a metallic locknut and insulated bushings on the inside of the box.

626.034 Concrete Foundations

The following paragraphs shall be added after the 10th paragraph:

The above grade portion of concrete foundation surfaces shall receive an application of Type 1C penetrating silane concrete sealer from special provision 515. The application rate and method of application shall be in accordance with manufacturer's published recommendations.

On surfaces to be treated, all voids shall be filled with mortar and the entire surface shall be dressed by dry rubbing to remove marks and blemishes to present a neat appearance. The silane application shall not be done until 14 days minimum after casting. Surfaces shall be free from laitance, oil, dirt, grease, dust, curing compound or any other deleterious material. The temperature of the concrete shall be above 40 degrees F and below 90 degrees F at the time of application or per manufacturer's published recommendations.

Any concrete foundation that is damaged during placement or doesn't meet design requirements will be replaced. No repairs to the foundations will be allowed.

All precast foundations in satisfactory condition as determined by the Resident shall be stacked at the MTA Crosby Maintenance Area. All cast in place foundations, and precast foundation in unsatisfactory condition shall become property of the contractor and disposed of by the Contractor off the turnpike right-of-way.

626.04 Method of Measurement

The following sentence is added:

Quazite junction box shall be measured by each unit in place and accepted existing or new and shall include 3-inch pvc drainpipe with critter guard to the nearest drainage point as shown in the plans.

Precast junction box shall be measured by each unit in place and accepted existing or new plans.

626.05 Basis of Payment

The following sentence shall be added to the third paragraph:

Payment of non-metallic conduit shall also include furnishing, installation, routing, termination, splices and connection of the wire per the plans and specifications.

The words, “polymer concrete” shall be added after the words, “precast concrete” in the second sentence of the second paragraph.

Payment will be made under:

| Pay Item | | Pay Unit |
|---|---|---|
| 626.121 | Quazite Junction Box (36X24) | Each |
| 626.122 | Quazite Junction Box (18X11) | Each |

# SPECIAL PROVISION

## SECTION 631

## EQUIPMENT RENTAL

### 631.02 General

The following sentences are added:

Electrician - Licensed by State of Maine.

Electrician's Apprentice - Enrolled in an accredited program.

Bucket Truck - minimum vertical working height of 40 feet and a minimum rated platform capacity of 350 pounds, including personnel, tools, and materials. The truck shall be equipped with outriggers or stabilizers as required by the manufacturer and shall be capable of safely accessing and operating at the proposed work locations.

### 631.08 Basis of Payment

The following paragraphs are added:

Such related costs such as use of hand tools, meal and room expenses, benefits, insurance, retirement, travel time, overtime, overhead and profit will not be measured separately for payment but shall be incidental to the unit price for the bid item.

Note: For extra materials required for miscellaneous work the General Contractor shall be allowed 15 percent overhead and profit on the cost of materials and rental equipment (not covered by miscellaneous unit items). Rates for Subcontractor owned equipment required to perform miscellaneous work, not otherwise provided for in the Contract, shall be negotiated.

The General Contractor will be allowed 10 percent overhead and profit on the subcontractor's cost of materials, and subcontractors rented equipment (not covered by miscellaneous unit items). The General Contractor shall include his markup on the Subcontractor's labor in the pay items.

The labor hour bid items shall include labor and labor burdens, benefits, supervision, transportation, travel time and allowances, overnights, small tools and equipment, subcontractor overhead and profit, and General Contractor overhead and profit. Time will be measured from the start of work to the stoppage of work at the project site; less the time taken for lunch. No deduction of time will be taken for the standard morning "coffee break".

| Pay Item | | Pay Unit |
|---|---|---|
| 631.51 | Bucket Truck | Hour |
| 631.53 | Electrician | Hour |
| 631.54 | Electrician's Apprentice | Hour |

# SPECIAL PROVISION

# SECTION 643

# TRAFFIC SIGNALS

# (Wood Poles)

## 643.01 Description

This work shall consist of removal of the existing utility pole and furnishing and installing new utility pole in coordination with the serving Utility Company.

## 643.02 Materials

Wood Utility Poles. Section 720.10 of the Standard Specifications shall apply.

## 643.11 Construction Requirements

The Contractor shall be responsible for coordinating with the serving Utility Company for final pole placement and requirements. Resident shall be invited to coordination meetings and included on correspondence between the Contractor and Utility Company.

Wood Utility pole install shall comply with the requirements specified herein and local codes, serving Utility Company codes, and the National Electrical Codes. Whichever code is more stringent shall apply.

Wood poles shall be placed in the ground to a depth of 20% of their overall length, with a maximum deviation from the vertical of ¼ inch in 5 feet. Backfill material shall be continually compacted during backfill operations.

Poles shall be back-guyed using a 10-inch expanding anchor with a 3/4 inch by 96-inch anchor rod. Thimble eyes of anchor rods shall extend 12 inches above finish ground. Cable used for back-guying shall be attached to the anchor rod by a short bail automatic type grip and to the guy hook on the pole by a preformed type grip. The pole shall be drilled 14 inches from top and a 5/8 inch oval eyebolt installed with one square flat washer and square nut on the messenger side and one square washer, square nut and guy hook on the opposite side. Any guy wire, messenger wire or span wire installations done on Utility Company poles shall follow Utility Company requirements.

After removal of the existing utility pole, the remaining hole shall be backfilled with material conforming to the the requirements of Granular Borrow (underwater) 703.19. Material shall be compacted in lifts no greater than 8”.

## 643.14 Method of Measurement

Wood Poles will be measured by each pole installed and guyed and accepted.

643.15 Basis of Payment

The accepted quantity of wood strain poles will be paid for at the contract unit price for each pole. Payment shall be full compensation for removal of the existing poles, furnishing, installing the poles, guys and span wire and all other materials, equipment and labor necessary to install wood strain poles.

| Pay Item | | Pay Unit |
|---|---|---|
| 643.931 | Remove and Replace Wood Pole | Each |

# SPECIAL PROVISION

## SECTION 643

## TRAFFIC SIGNALS

## (Meter Pedestal)

### 643.01 Description

This work shall consist of removing the existing meter pedestal and installing a new meter pedestal as detailed in the plans in coordination with the MTA Director of ITS and the serving Utility Company.

### 643.02 Materials

Meter base and post to be P&K CP 314 or Approved Equal

Concrete for drilled shafts shall be Class AAA in accordance with Maine Turnpike Authority Supplemental Specification Section 502 - Structural Concrete.

### 643.14 Method of Measurement

Meter Pedestal will be measured by each installed.

### 643.15 Basis of Payment

The accepted quantity of Meter Pedestal will be paid for at the contract unit price for each. Payment shall be full compensation for coordination with the serving utility, removal of the existing meter pedestal, furnishing/installing new meter pedestal including anchor bolts, concrete foundation, NEMA Disconnect, conduit, meter housing with lever bypass, and all other materials, equipment and labor necessary to complete the installation per the plan details.

| Pay Item | | Pay Unit |
|---|---|---|
| 643.92 | Pedestal Pole | Each |

# SPECIAL PROVISION

## SECTION 645

## HIGHWAY SIGNING

(Replace Limerick Road VMS and Install Walkway – MM 28.30)

### 645.01 Description

The following paragraph is added:

This work shall consist of the removal and disassembly of the existing Variable Message Sign (VMS), mounting brackets, and walkway and replacement with a new VMS (provided by MTA), mounting brackets and walkway at the MM 28.30 overhead sign structure as specified herein and as shown on the Plans. The work shall also consist of installing and tuning a CCTV camera (provided by MTA) and resetting a point-to-point radio antenna, including necessary conduit, riser and communications cable.

The VMS, Controller Cabinet, Camera, Junction boxes, and Point-to-Point radio antenna shall be installed in accordance with Special Provision 650.

This work includes the following:

- Removal and disassembly of the existing overhead VMS, mounting brackets, walkway components, and wiring. The VMS and all existing VMS vertical support brackets, walkway assembly components and wiring shall be disposed of by the Contractor.
- Removal of existing controller cabinet. The existing controller cabinet shall be stripped of contents (existing shelving to remain) and transported to, and stacked at, the MTA ITS Service Department located at Crosby Maintenance Facility Mile Marker 45.8 Southbound, or as directed by the Resident. Contents of the controller cabinet shall be disposed of by the contractor.
- Complete removal and disposal of the existing cabinet concrete foundation.
- All underground conduits running from the existing cabinet to the sign foundation shall have existing wiring removed and the conduits shall be reused.
- Removal of all underground conduits and associated wiring running from the existing cabinet to the meter disconnected located on the riser pole
- Coordinating with utilities.
- MTA shall provide the new VMS sign and controller cabinet for Contractor installation in accordance with Special Provision 650.
- MTA shall provide the new CCTV camera for Contractor installation and tuning in accordance with Special Provision 650.
- Furnishing and installing new junction boxes on sign structure as shown in the plans and described in Special Provision 650.

- Furnishing and installing new camera mount on existing VMS structure as shown in the plans and described in Special Provision 650.
- Removal, installation, and tuning of the existing point to point to radio.
- Installation of the new VMS with new vertical support members, new controller cabinet, and all labor, materials, and equipment required for the VMS to be fully operational. Location of controller cabinet shall be determined in the field by the Resident Engineer in coordination with the Director of MTA ITS
- Furnishing, sizing, and installing all electrical conductors and communication cables in conduit associated with the VMS, camera, and point-to-point radio, including terminations and connectors.
- Fabrication and installation of the walkway as specified and shown in the Plans.
- Removal of the grout pads underneath the existing overhead sign structure column base plates and wrapping space between base plate and top of foundation with AWG #16 stainless steel wire cloth with ¼" maximum opening.
- Repairing areas of erosion around the sign structure foundations.
- Restoration of disturbed ground area to meet or exceed existing conditions including loam, seed, and mulch

645.02 General

The following paragraphs are added:

Removal and replacement of the VMS and walkway shall be completed in accordance with the details as shown on the Plans and provided in these Specifications.

Steel components shall be fabricated and installed in accordance with Standard Specification Section 504 Structural Steel.

**All dimensions related to the sign truss at Mile Market 28.30 shown on the plan are assumed. The Contractor shall field measure all overhead sign structure dimensions shown in the plans prior to submittal of shop drawings**. The Contractor shall submit fabrication drawings considering field measured dimensions for the VMS support system and walkway for review and approval by the Turnpike. The submittal shall include a copy of the Contractor's field measurements.

Existing Sign Removal and New Sign Installation shall be performed at night only, with traffic stoppage periods in accordance with Specification 652- Maintenance of Traffic.

VMS supports and walkway installation shall be completed within the lane closure and traffic stoppage periods noted in Specification 652 – Maintenance of Traffic.

Any damage caused to existing sign structure by the Contractor shall be repaired or replaced by the Contractor at no additional cost to the Authority.

Ground mounted control cabinet foundation shall be constructed as shown in the Plans and in accordance with Standard Specification Section 626 and Special Provision Section 626.

645.021 Materials

The following is added:

| | |
|---|---|
| Structural Steel | 713.01 |
| Heavy-Hex Structural Bolts, Washers, Nuts and DTI's | 713.02 |

All bolts, nuts, connectors and miscellaneous hardware required for installation of the VMS support brackets and walkway assembly shall be new and in accordance with the provisions of Standard Specification 504 – Structural Steel.

All replacement structural steel shall be in accordance with the materials listed in the Plans and shall be hot-dip galvanized after fabrication in accordance with the requirements of Standard Specification 504 – Structural Steel.

Walkway grating shall be 19-W-4 galvanized welded carbon steel bar grating, 175 Serrated (1-1/2" Depth), manufactured by (or approved equal):

P&R Metals
4017 Richard Arrington Blvd North
Birmingham, AL 35212
(877) 880-3319

For conduit and electrical material requirements see Special Provision 650.

645.023 Support Structures

The following paragraph shall replace the second paragraph under section b. Bridge, Cantilever, and Butterfly Type Sign Supports:

Signs shall be placed on the existing support structure to accommodate the minimum height requirement shown on the Plans – see Standard Specification Section 645.06. The Contractor shall use the Contract Drawings in order to determine the approximate horizontal placement of signs. Installation shall be in accordance with Section 645.06 – Installation of Type I Signs.

645.071 Removing and Installing the VMS and Walkway

The Contractor shall furnish a written plan and procedures to the Authority for the removal and disassembly of the existing support components, the erection of the installation of the new VMS, support brackets and walkway assembly and shall be signed and stamped by a Professional Engineer registered in the State of Maine. The installation of VMS, support brackets and walkway shall be in accordance with:

1. AASHTO "Standard Specifications for Structural Supports for Highway Traffic Signs, Luminaries and Traffic Signals";

2. FHWA Guidelines for the Installation, Inspection, Maintenance and Repair of Structural Supports for Highway Signs, Luminaires, and Traffic Signals;

The erection plan shall include the number and location of crane(s), the weight of the pick, crane capacities, bracing locations and all other pertinent information needed to demonstrate the VMS can be safely erected and assembled.

When the material from an existing structure is specified on the plans to be retained by the Authority the Contractor shall carefully dismantle it, and all materials, except those that may be specified to be reused in the new structure, shall be loaded on trucks, transported and neatly stacked by the Contractor at the location specified on the Plans.

All materials not specified to be retained by the Authority shall become property of the Contractor and shall be removed from the site at the completion of the Project. The Contractor shall provide the Resident with an affidavit stating the final location of all disposed material and that the material was disposed of in accordance with the Maine Department of Environmental Protection Solid Waste Regulations.

Contractor shall completely remove existing concrete cabinet foundations.

Existing galvanized sign conduit shall be reinstalled and repaired or replaced in accordance with Section 626, and Special Provision Section 650 if needed. All existing minis, clamps, etc currently supporting the conduit shall be removed and replace per Special Provision 650.

Areas of existing corrosion on existing components to remain shall be repaired as directed by the Resident. Repairs shall be in accordance with ASTM *A 780, Standard Practice for Repair of Damaged and Uncoated Areas of Hot-Dip Galvanized Coatings* (A 780), Annex A1 or A3. All cold galvanizing repair materials shall be brush applied ZRC Cold Galvanizing Compound, manufactured by ZRC Worldwide. Application shall be in accordance with the manufacturer's written specifications.

See Special Provision 650 for VMS and Controller Cabinet installation requirements.

Maine Turnpike Authority will allow the contractor to transport the sign structure as an overlength load on the Turnpike during nighttime hours if requested by the Contractor. The Maine Turnpike Authority will provide state police to escort the load.

The Contractor shall be responsible for and shall repair all damage caused to underground drainage structures, utilities or lighting conduit, which are encountered during construction.

The Contractor shall ensure that all electric power has been severed at its source prior to disassembling the structure.

645.08 Method of Measurement

Replacement of the VMS and Walkway on the existing overhead sign structure at Limerick Road MM 28.30 will be measured by the lump sum for a fully operational system in place in accordance with the Contract Plans and these Specifications.

645.09 Basis of Payment

The accepted quantity of removal, disassembly and relocation of overhead sign structure and installing new VMS and walkway will be paid for at the contract lump sum price, which price shall be full compensation for all materials, equipment, labor and hardware necessary to remove, disassemble and relocate the overhead sign structure and install the new VMS and walkway in accordance with the Specifications and details as shown on the Plans.

The Lump Sum Payment for Replacement of VMS and Walkway at Limerick Road MM 28.30 shall be full compensation for the work shown on the plans, described within the special provisions and including but not limited to the following:

- All materials, equipment, labor and hardware necessary to remove the existing VMS, support brackets and walkway in accordance with the Specifications and details as shown on the Plans. This work includes disposal of the existing VMS, support brackets, and walkway components.
- Furnishing, sizing, and installing all electrical conductors and communication cables associated with the VMS, camera, and point-to-point radio, including terminations and connectors for a complete and operational system.
- Furnishing and installing all conduit, conduit bodies, flexible conduit, junction boxes, fittings, connectors, and associated materials and appurtenances required for a complete and operational installation of the VMS sign, camera, and point-to-point radio components, the conduit is considered incidental extending to 5 feet beyond the outside limits of the structure foundations. conduit mounted on the structure
- Removing and disposing of existing concrete cabinet foundation, galvanized steel sign conduit.
- Furnishing and installing utility power and communication, all utility connections, attachments, hardware, meters, disconnects, associated cabling and all equipment required to install utilities associated with VMS installation.
- Installing VMS Ground Mounted Control Cabinets
- VMS installation, configuration and electrical and communication testing, associated with VMS board and the VMS controller including full compensation for furnishing, installing, erecting, and testing: and all materials, labor, equipment, tools, miscellaneous hardware and incidentals necessary to complete the work.
- Removal of the grout pads underneath the existing overhead sign structure column base plates and wrapping space between base plate and top of foundation with AWG #16 stainless steel wire cloth with ¼” maximum opening.
- Apply cold galvanizing compound to areas of corrosion.

Construction of ground mounted cabinet foundation is not included with Pay Item 645.1242 but paid for separately under Pay Item 626.38

No additional compensation will be made for items replaced as a result of damage occurring during the modification or relocating of existing overhead signs.

Final payment will not be made until the system is fully operational, tested, and accepted by the Maine Turnpike Authority.

Payment will be made under:

| Pay Item | | Pay Unit |
|---|---|---|
| 645.1242 | Replace Limerick Road VMS and Install Walkway – MM 28.30 | Lump Sum |

SPECIAL PROVISION

SECTION 645

HIGHWAY SIGNING

(Removal, Disassembly and Relocation of Overhead Sign Structure and Install VMS and Walkway - Mountain Road – MM 53.40)

645.01 Description

The following paragraph is added:

This work shall consist of the removal and disassembly of the existing Variable Message Sign (VMS), mounting brackets, walkway, truss, and columns at MM 53.40 (Mountain Road) and replacement with the overhead sign structure relocated from MM 43.0 Northbound (Holmes Road) in Scarborough. The Contractor shall install new VMS (provided by MTA), controller cabinet (provided by MTA), mounting brackets, and walkway, The work shall also consist of installing and tuning a CCTV camera (provided by MTA) and resetting a point-to-point radio antenna, including necessary conduit, riser and communications cable.

The Contractor shall remove and dispose of the existing VMS mounting brackets, walkway components, and the existing VMS off from the sign structure at MM 53.40 (Mountain Road). The Contractor shall remove, store and transport the existing sign truss and columns from MM 53.40 Southbound (Mountain Road) to MTA Sign Shop at Mile Marker 58.3 Northbound. The Contractor shall coordinate delivery date and time with the Resident. The Contractor shall be responsible for unloading the materials at the Sign Shop.

The VMS, Controller Cabinet, Camera, Junction boxes, and Point-to-Point radio antenna shall be installed in accordance with Special Provision 650.

This work includes the following:

- Removal and Disassembly of the existing overhead VMS, mounting brackets, walkway components and conduits/wiring on sign truss at MM 53.40 Southbound (Mountain Road). The VMS and all existing VMS vertical support brackets, walkway assembly components and conduit/wiring shall be disposed of by the Contractor.
- Storage and transport of the supporting structure (Truss and columns) from Holmes Road to Mountain Road (MM 53.40).
- Removal of existing controller cabinet. The existing controller cabinet shall be stripped of contents (existing shelving to remain) and transported to, and stacked at, the MTA ITS Service Department located at Crosby Maintenance Facility Mile Marker 45.8 Southbound, or as directed by the Resident. Contents of the controller cabinet shall be disposed of by the contractor.
- Complete removal and disposal of the existing cabinet concrete foundation.

- Removal of all underground conduits and associated wiring running from the existing cabinet to the meter disconnected located on the riser pole
- Removal of all underground conduits and associated wiring running from the existing cabinet to the existing sign foundation.
- Removal of existing VMS concrete foundations to 5 feet below existing grade;
- Coordinating with utilities.
- Installation of the relocated sign structure on new foundations.
- MTA shall provide the new VMS sign and controller cabinet for Contractor installation in accordance with Special Provision 650.
- MTA shall provide the new CCTV camera for Contractor installation and tuning in accordance with Special Provision 650
- Furnishing and installing new junction boxes on sign structure as shown in the plans and described in Special Provision 650.
- Removal, installation, and tuning of the existing point to point to radio.
- Installation of the new VMS with new vertical support members, new controller cabinet, and all labor, materials, and equipment required for the VMS to be fully operational. Location of controller cabinet shall be determined in the field by the Resident Engineer in coordination with the Director of MTA ITS
- Furnishing, sizing, and installing all electrical conductors and communication cables in conduit associated with the VMS, camera, and point-to-point radio, including terminations and connectors.
- Fabrication and installation of the walkway as specified and shown in the Plans.
- Wrapping space between base plate and top of foundation with AWG #16 stainless steel wire cloth with ¼" maximum opening.
- Restoration of disturbed ground area to meet or exceed existing conditions including loam, seed, and mulch

645.02 General

The following paragraphs are added:

Relocating the existing overhead highway VMS shall be completed in accordance with the details as shown on the Plans and provided in the Specifications.

Steel components shall be fabricated and installed in accordance with Standard Specification Section 504 Structural Steel.

**All dimensions related to the sign truss at Mile Market 53.4 shown on the plan are assumed. Prior to foundation placement and sign shop drawings, the Contractor shall field measure all overhead sign structure dimensions shown in the plans prior to submittal of shop drawings**. The Contractor shall submit fabrication drawings considering field measured dimensions

for the VMS support system and walkway for review and approval by the Turnpike. The submittal shall include a copy of the Contractor's field measurements.

Existing Sign Removal, New Sign Installation and Truss Structure Removal/installation shall be performed at night only, with traffic stoppage periods in accordance with Specification 652-Maintenance of Traffic.

VMS supports and walkway installation shall be completed within the lane closure and traffic stoppage periods noted in Specification 652 – Maintenance of Traffic.

The Contractor shall take special care as not to damage existing overhead VMS. Any damage caused to existing sign, controller cabinet, sign structure, or sign material shall be replaced by the Contractor at no additional cost to the Authority.

Ground mounted control cabinet foundation shall be constructed as shown in the Plans and in accordance with Standard Specification Section 626 and Special Provision Section 626.

645.021 Materials

The following is added:

| | |
|---|---|
| Structural Steel | 713.01 |
| Heavy-Hex Structural Bolts, Washers, Nuts and DTI's | 713.02 |

All bolts, nuts, connectors and miscellaneous hardware required for re-erecting the sign structure shall be new and of the same size, class, and type as those removed and as approved re-use of materials shall be in accordance with the provisions of Section 504 - Structural Steel.

All replacement structural steel shall be in accordance with the materials listed in the Plans and shall be hot-dip galvanized after fabrication in accordance with the requirements of Standard Specification 504 – Structural Steel.

Walkway grating shall be 19-W-4 galvanized welded carbon steel bar grating, 175 Serrated (1-1/2" Depth), manufactured by (or approved equal):

P&R Metals
4017 Richard Arrington Blvd North
Birmingham, AL 35212
(877) 880-3319

For conduit and electrical material requirements see Special Provision 650.

645.023 Support Structures

The following paragraph shall replace the second paragraph under section b. Bridge, Cantilever, and Butterfly Type Sign Supports:

Signs shall be placed on the existing support structure to accommodate the minimum height requirement shown on the Plans – see Standard Specification Section 645.06. The Contractor shall

use the Contract Drawings in order to determine the approximate horizontal placement of signs. Installation shall be in accordance with Section 645.06 – Installation of Type I Signs.

645.071 Removing and Reinstalling Existing Sign Structure and Installing New VMS and Walkway

The VMS and Control Cabinet shall be provided by MTA, see Special Provision 650 for more information. The Contractor shall furnish and install all support components and hardware required to attach the VMS panel to the existing sign structure. VMS shall be mounted using Zee bars attached along the top, bottom, and center of the VMS panel. The Zee bars shall be bolted to the steel supports on each side of the web as shown in the plans.

The Contractor shall furnish a written plan and procedures to the Authority for the removal and disassembly of the structure, the erection of the installation and tightening of anchor bolts at the new location and shall be signed and stamped by a Professional Engineer registered in the State of Maine and in accordance with:

1. AASHTO "Standard Specifications for Structural Supports for Highway Traffic Signs, Luminaries and Traffic Signals";
2. FHWA Guidelines for the Installation, Inspection, Maintenance and Repair of Structural Supports for Highway Signs, Luminaires, and Traffic Signals;

The erection plan shall include the number and location of crane(s), the weight of the pick, crane capacities, bracing locations and all other pertinent information needed to demonstrate the sign structure and VMS can be safely erected and assembled.

When the material from an existing structure is specified on the plans to be retained by the Authority the Contractor shall carefully dismantle it, and all materials, except those that may be specified to be reused in the new structure, shall be loaded on trucks, transported and neatly stacked by the Contractor at the location specified on the Plans.

All materials not specified to be retained by the Authority shall become property of the Contractor and shall be removed from the site at the completion of the Project. The Contractor shall provide the Resident with an affidavit stating the final location of all disposed material and that the material was disposed of in accordance with the Maine Department of Environmental Protection Solid Waste Regulations.

Contractor shall completely remove existing concrete cabinet foundations.

Existing galvanized sign conduit shall be reinstalled and repaired or replaced in accordance with Section 626, and Special Provision Section 650 if needed. All existing minis, clamps, etc currently supporting the conduit shall be removed and replace per Special Provision 650.

Any existing corrosion and damage caused by the contractor to the galvanized coating shall be touched up after the erection of the truss, walkway, and sign, as directed by the Resident. Repairs to galvanizing shall be in accordance with ASTM A 780, Standard Practice for Repair of Damaged and Uncoated Areas of Hot-Dip Galvanized Coatings (A 780), Annex A1 or A3. All cold galvanizing repair materials shall be brush applied ZRC Cold Galvanizing Compound, manufactured by ZRC Worldwide. Application shall be in accordance with the manufacturer's written specifications.

See Special Provision 650 for VMS and Controller Cabinet installation requirements

Maine Turnpike Authority will allow the contractor to transport the sign structure as an overlength load on the Turnpike during nighttime hours if requested by the Contractor. The Maine Turnpike Authority will provide state police to escort the load.

The Contractor shall be responsible for and shall repair all damage caused to underground drainage structures, utilities or lighting conduit, which are encountered during construction.

The Contractor shall ensure that all electric power has been severed at its source prior to disassembling the structure.

645.08 Method of Measurement

Removal, disassembly, and relocation of the overhead sign structure and installing new VMS and walkway at Mountain Road MM 53.40 will be measured by the lump sum for a fully operational system in place in accordance with the Contract Plans and these Specifications.

645.09 Basis of Payment

The accepted quantity of removal, disassembly and relocation of overhead sign structure and installing new VMS and walkway will be paid for at the contract lump sum price, which price shall be full compensation for all materials, equipment, labor and hardware necessary to remove, disassemble and relocate the overhead sign structure and install the new VMS and walkway in accordance with the Specifications and details as shown on the Plans.

The Lump Sum Payment for Replacement of VMS and Walkway at Mountain Road MM 53.40 shall be full compensation for the work shown in the plans, described within the special provisions and including but not limited to the following:

- All materials, equipment, labor and hardware necessary to remove the existing VMS, support brackets, walkway in accordance with the Specifications and details as shown on the Plans. This work includes disposal of the existing VMS, support brackets, and walkway components.
- Removing and disassembling the existing Variable Message Sign (VMS), mounting brackets, walkway, truss, and columns at MM 53.40 (Mountain Road) and transporting to the Sign Shop.
- Storage and transport of the relocated supporting structure from Holmes Road (MM 43.0 NB) to Mountain Road (MM 53.40 SB);
- Erection of relocated support structure on new foundations including all new bolts, U-bolts, washers, and nuts.
- Furnishing, sizing, and installing all electrical conductors and communication cables associated with the VMS, camera, and point-to-point radio, including terminations and connectors for a complete and operational system.
- Furnishing and installing all conduit, conduit bodies, flexible conduit, junction boxes fittings, connectors, and associated materials and appurtenances required for a

complete and operational installation of the VMS sign, camera, and point-to-point radio components, the conduit is considered incidental extending to 5 feet beyond the outside limits of the structure foundations. conduit mounted on the structure

- Removing and disposing of existing concrete cabinet foundation and galvanized steel sign conduit
- Furnishing and installing utility power and communication, all utility connections, attachments, hardware, meters, disconnects, associated cabling and all equipment required to install utilities associated with VMS installation.
- Installing VMS Ground Mounted Control Cabinets
- VMS installation, configuration and electrical and communication testing, associated with VMS board and the VMS controller including full compensation for furnishing, installing, erecting, and testing: and all materials, labor, equipment, tools, miscellaneous hardware and incidentals necessary to complete the work.
- Apply cold galvanizing compound to areas of corrosion.

Construction of ground mounted cabinet foundation is not included with Pay Item 645.1244 but paid for separately under Pay Item 626.38

No additional compensation will be made for items replaced as a result of damage occurring during the modification or relocating of existing overhead signs.

Final payment will not be made until the system is fully operational, tested, and accepted by the Maine Turnpike Authority.

Payment will be made under:

| Pay Item | | Pay Unit |
|---|---|---|
| 645.1244 | Removal, Disassembly and Relocation of Overhead Sign Structure and Install VMS and Walkway Mountain Road -MM 53.40 | LS |

SPECIAL PROVISION

SECTION 645

HIGHWAY SIGNING

(Replace Overhead Sign Structure and Walkway and Install VMS – Cider Hill Road – MM 6.20 & Holmes Road – MM 43.00)

645.01 Description

The following paragraph is added:

This work shall consist of the removal and disassembly of the existing Variable Message Signs (VMS), mounting brackets, walkways, trusses and columns. Replacement of the overhead sign structures, installation of a new VMS (provided by MTA), Controller Cabinet (provided by MTA), and walkways as specified herein and as shown on the Plans. The overhead sign structures to be replaced are located at Cider Hill Road MM 6.20 Northbound and Holmes Road MM 53.40 Northbound. The work shall also consist of installing and tuning a CCTV camera (provided by MTA) and resetting a point-to-point radio antenna, including necessary conduit, riser and communications cable.

The Contractor shall remove and dispose of the existing VMS mounting brackets, walkway components, and existing VMS's off from the sign structures. The Contractor shall remove, store, and transport the existing Holmes Road Northbound, MM 43.00 Overhead Sign Structure to Mountain Road Southbound, MM 53.40. The Contractor shall remove, store and transport the existing Cider Hill Road Northbound, MM 6.20 Overhead Sign Structure to the MTA Sign Shop at Mile Marker 58.3 Northbound. The Contractor shall coordinate delivery date and time with the Resident. The Contractor shall be responsible for unloading the materials at the Sign Shop.

The VMS, Controller Cabinet, Camera, Junction boxes, and Point-to-Point radio antenna shall be installed in accordance with Special Provision 650.

This work includes the following:

- Removal and disassembly of the existing overhead VMS, mounting brackets, walkway components, and wiring. The VMS and all existing VMS vertical support brackets, walkway assembly components and wiring shall be disposed of by the Contractor.
- Storage and transport of the supporting structure (Truss and columns) as described above.
- Removal of existing controller cabinet. The existing controller cabinet shall be stripped of contents (existing shelving to remain) and transported to, and stacked at, the MTA ITS Service Department located at Crosby Maintenance Facility Mile Marker 45.8 Southbound, or as directed by the Resident. Contents of the controller cabinet shall be disposed of by the contractor.
- Complete removal and disposal of the existing cabinet concrete foundation.

- Removal of all underground conduits and associated wiring running from the existing cabinet to the meter disconnected located on the riser pole.
- Removal of all underground conduits and associated wiring running from the existing cabinet to the existing sign foundation.
- Removal of existing VMS concrete foundations to 5 feet below existing grade;
- Coordinating with utilities.
- MTA shall provide the new VMS sign and controller cabinet for Contractor installation in accordance with Special Provision 650.
- MTA shall provide the new CCTV camera for Contractor installation and tuning in accordance with Special Provision 650
- Furnishing and installing new junction boxes on sign structure as shown in the plans and described in Special Provision 650.
- Removal, installation, and tuning of the existing point to point to radio.
- Installation of the new VMS with new vertical support members, new controller cabinet, and all labor, materials, and equipment required for the VMS to be fully operational. Location of controller cabinet shall be determined in the field by the Resident Engineer in coordination with the Director of MTA ITS
- Fabrication and installation of new sign structure on new foundations and walkway as specified and shown in the Plans.
- Furnishing, sizing, and installing all electrical conductors and communication cables in conduit associated with the VMS, camera, and point-to-point radio, including terminations and connectors.
- Wrapping space between base plate and top of foundation with AWG #16 stainless steel wire cloth with ¼" maximum opening.
- Restoration of disturbed ground area to meet or exceed existing conditions including loam, seed, and mulch

The Overhead Sign Structures shall meet MaineDOT Standard Specification Sections 645.02 through 645.07 as applicable.

The Overhead Sign Structure Foundations shall meet MaineDOT Standard Specification 626 and Special Provision 626.

645.02 General

The following paragraphs are added:

Removals and replacements of the VMS and walkways shall be completed in accordance with the details as shown on the Plans and provided in these Specifications.

Steel components shall be fabricated and installed in accordance with Standard Specification Section 504 Structural Steel.

**All dimensions related to the sign truss at Mile Marker 6.20 and 43.0 shown on the plan are assumed. Prior to foundation placement and sign shop drawings, the Contractor shall field measure all overhead sign structure dimensions shown in the plans prior to submittal of shop drawings**. The Contractor shall submit fabrication drawings considering field measured dimensions for the VMS support system and walkway for review and approval by the Turnpike. The submittal shall include a copy of the Contractor's field measurements.

Existing Sign Removals, New Sign Installations and Truss Structure Removals/installations shall be performed at night only, with traffic stoppage periods in accordance with Specification 652- Maintenance of Traffic.

VMS supports and walkway installation shall be completed within the lane closure and traffic stoppage periods noted in Specification 652 – Maintenance of Traffic.

The Contractor shall take special care as not to damage existing overhead VMS. Any damage caused to existing signs, controller cabinets, sign structures, or sign materials shall be replaced by the Contractor at no additional cost to the Authority.

Ground mounted control cabinet foundation shall be constructed as shown in the Plans and in accordance with Standard Specification Section 626 and Special Provision Section 626.

645.021 Materials

The following is added:

| | |
|---|---|
| Structural Steel | 713.01 |
| Heavy-Hex Structural Bolts, Washers, Nuts and DTI's | 713.02 |

All bolts, nuts, connectors and miscellaneous hardware required for installation of the VMS support brackets and walkway assembly shall be new and in accordance with the provisions of Standard Specification 504 – Structural Steel.

All replacement structural steel shall be in accordance with the materials listed in the Plans and shall be hot-dip galvanized after fabrication in accordance with the requirements of Standard Specification 504 – Structural Steel.

Walkway grating shall be 19-W-4 galvanized welded carbon steel bar grating, 175 Serrated (1-1/2" Depth), manufactured by (or approved equal):

P&R Metals
4017 Richard Arrington Blvd North
Birmingham, AL 35212

(877) 880-3319

For conduit and electrical material requirements see Special Provision 650.

645.023 Support Structures

The design, materials and fabrication of Sign Support Structures shall meet the requirements of the current edition of AASHTO "LRFD Specifications for Structural Supports for Highway Signs, Luminaires, and Traffic Signals" and interims thereto, as noted below except as otherwise indicated within these specifications or on the Contract Plans.

Beam-mounted roadside sign supports and associated signs and hardware shall be designed using the following criteria:

- Basic wind speeds based on a 300-year mean recurrence interval
- $K_z$ as specified in Table C3.8.4-1 (Height and Exposure Factors)
- $K_d$ as specified in Table 3.8.5-1 (Directionality Factors)
- G as 1.14, minimum (Gust Factor)
- $C_d$ as specified in Table 3.8.7-1 (Wind Drag Coefficients)

Bridge-mounted, bridge-type, cantilever, and butterfly-type sign supports and associated signs and hardware and all sign support structures supporting variable message signs shall be designed using the following criteria:

- Basic wind speeds based on a 1700-year mean recurrence interval
- $K_z$ as specified in Table C3.8.4-1 (Height and Exposure Factors)
- $K_d$ as specified in Table 3.8.5-1 (Directionality Factors)
- G as 1.14, minimum (Gust Factor)
- $C_d$ as specified in Table 3.8.7-1 (Wind Drag Coefficients)
- Deflection requirements as specified in Section 10.4

Cantilever and butterfly-type sign supports and all structures supporting variable message signs shall be classified as Fatigue Category I. Bridge-type sign supports shall be classified as Fatigue Category II. Fatigue Importance Factors shall be as specified in Table 11.6-1 (Fatigue Importance Factors).

For bridge-mounted sign supports (including approaches to bridge structures), the mounting height shall be measured as the distance of the mounted sign(s) center of gravity to one of the following:

For bridges over bodies of water: above the prevailing water level or, in the case of tidal waters, above mean high tide.

For overpass structures: above the lower roadway level.

For approach ramps: above the average adjacent ground level, if said ground level is more than 10 feet below the base of the structure.

All cantilever and butterfly type sign support structures shall be equipped with an approved damping or energy-absorbing device.

For aluminum construction, welding shall conform to the current edition of AWS Structural Welding Code, Aluminum, D1.2 for aluminum construction.

After execution of the contract and before any shop work has commenced, the Contractor shall submit for approval the drawings, and design and fatigue computations if prescribed below, for all Sign Support Structures proposed to be furnished and erected under this contract. The drawings shall be of sufficient detail to indicate material and/or dimensional conformance with these specifications and the Contract Plans and, in the case of bridge, cantilever and butterfly type sign supports, shall be sufficiently detailed to show all significant structural details.

Approval for deviations from the Contract Plans and/or Specifications shall be requested in writing and shall be approved by the Fabrication Engineer before being incorporated in the manufacturer's drawings. Requests for substitution of all specified material shall be submitted in writing, with full documentation (specifications, mill certification, etc.) enabling the Department to evaluate the proposal.

Sign Support Structures and anchor bolts shall meet the requirements specified in Section 720 as well as the current edition of AASHTO "LRFD Specifications for Structural Supports for Highway Signs, Luminaires, and Traffic Signals" and interims thereto.

A Certificate of Compliance shall be provided for all applicable materials noted in Section 645.021 – Materials, in accordance with the requirements of the General Statement of Division 700 - Materials.

Bridge-Type, Cantilever, and Butterfly-Type Sign Supports:

The Contractor shall be responsible for the design of the Sign Support Structures for bridge-type, cantilever and butterfly-type sign supports in accordance with this specification.

Signs shall be placed on the Sign Support Structure such that the bottom edges are aligned (unless written consent from the Fabrication Engineer is obtained), while accommodating the minimum height requirement - see Section 645.06. The Contractor shall use the Contract Plans in order to determine the approximate horizontal placement of signs. Installation shall be in accordance with Section 645.06 - Installation of Type I Signs. The structure and foundation shall be designed to accommodate an additional theoretical sign load on each structure. This additional theoretical sign load for each sign shown in the contract documents shall be computed by: For single signs increasing the sign widths an additional 25% without changing the horizontal midpoint of the sign; for multiple signs the sign widths shall be increased 25% toward the outside sign edges. The height of all signs shall be increased 25% without changing the bottom edge elevation of the signs.

Bridge-type Sign Support Structures shall be designed using either a tri-chord or four- chord truss structure as the overhead member. Each of the two upright members supporting the bridge-type overhead truss member shall consist of a minimum of two vertical legs. A four chord truss configuration shall be required if the Contract Documents specify placing signs on both sides of the overhead structure (two way traffic beneath structure). Cantilever and butterfly-type structures shall be designed using either a tri-chord or four-chord overhead truss member. The upright member of a cantilever or butterfly-type support structure shall have a maximum

horizontal deflection in accordance with Section 10.4.2.1 of the current edition of the AASHTO "LRFD Specifications for Structural Supports for Highway Signs, Luminaires, and Traffic Signals", and interims thereto.

The base plates of uprights for all types of Sign Support Structures shall have heavy hex leveling nut with 2 hardened flat washers. The distance between the bottom of the base plates to the top of the foundations shall not exceed twice the diameter of the anchor bolts. Grout, or other materials, shall not be placed between base plates and the top of foundations.

In addition to the required detail drawings, the Contractor shall submit 3 copies of the design and fatigue computations meeting the all applicable requirements of this specification or the Contract Plans for each Sign Support Structure. Erection lifting points shall be clearly depicted on the shop drawing. The computations shall be sufficiently detailed to allow the Engineer to review the computations. Computer printouts will not be accepted unless they meet the above criteria. All plans and design calculations for sign support structures and foundations shall be sealed by a Professional Engineer licensed in accordance with the State of Maine regulations. Approval will be based on the applicable provisions of Section 105.7 - Working Drawings.

Overhead sign panel mounting devices shall be designed accommodating the requirements of appropriate sign panel tilting included in this specification. The design of this assembly shall include fastening sign panels directly to steel or aluminum members as further described in Section 719.07, as well as other applicable Sections, Plans and Specifications.

645.071 Removing and Replacing Sign Structure and Installing New VMS and Walkway

The VMS and Control Cabinet shall be provided by MTA, see Special Provision 650 for more information. The Contractor shall furnish and install all support components and hardware required to attach the VMS panel to the new sign structure. VMS shall be mounted using Zee bars attached along the top, bottom, and center of the VMS panel. The Zee bars shall be bolted to the steel supports on each side of the web as shown in the plans.

The Contractor shall furnish a written plan and procedures to the Authority for the removal and disassembly of the structure, the erection of the installation and tightening of anchor bolts at the new location and shall be signed and stamped by a Professional Engineer registered in the State of Maine and in accordance with:

1. AASHTO "Standard Specifications for Structural Supports for Highway Traffic Signs, Luminaries and Traffic Signals";
2. FHWA Guidelines for the Installation, Inspection, Maintenance and Repair of Structural Supports for Highway Signs, Luminaires, and Traffic Signals;

The erection plan shall include the number and location of crane(s), the weight of the pick, crane capacities, bracing locations and all other pertinent information needed to demonstrate the sign structure and VMS can be safely erected and assembled.

When the material from an existing structure is specified on the plans to be retained by the Authority the Contractor shall carefully dismantle it, and all materials, except those that may be specified to be reused in the new structure, shall be loaded on trucks, transported and neatly stacked by the Contractor at the location specified on the Plans.

All materials not specified to be retained by the Authority shall become property of the Contractor and shall be removed from the site at the completion of the Project. The Contractor shall provide the Resident with an affidavit stating the final location of all disposed material and that the material was disposed of in accordance with the Maine Department of Environmental Protection Solid Waste Regulations.

Contractor shall remove existing concrete VMS foundations to 5 feet below grade

Maine Turnpike Authority will allow the contractor to transport the sign structure as an overlength load on the Turnpike during nighttime hours if requested by the Contractor. The Maine Turnpike Authority will provide state police to escort the load.

The Contractor shall be responsible for and shall repair all damage caused to underground drainage structures, utilities or lighting conduit, which are encountered during construction.

645.08 Method of Measurement

The following paragraph is added:

Replace Overhead Sign Structure and Walkway and Install VMS will be measured by the lump sum at each location for a fully operational system in place in accordance with the Contract plans and these Specifications.

645.09 Basis of Payment

The Lump Sum Payment for Replacement of VMS and Walkway Cider Hill Road -MM 6.20 and Holmes Road -MM 43.00 shall be full compensation for the work shown in the plans, described in the special provisions and including but not limited to the following:

- All materials, equipment, labor and hardware necessary to remove the existing VMS, support brackets, walkway in accordance with the Specifications and details as shown on the Plans. This work includes disposal of the existing VMS, support brackets, and walkway components.
- Removing and disassembling the existing Variable Message Sign (VMS), mounting brackets, walkway, truss, and columns and transporting to the Sign Shop.
- Erection of new support structure on new foundations.
- Furnishing, sizing, and installing all electrical conductors and communication cables associated with the VMS, camera, point-to-point radio, and HAR radio system including terminations and connectors for a complete and operational system
- Furnishing and installing all conduit, conduit bodies, flexible conduit, fittings, connectors, and associated materials and appurtenances required for a complete and operational installation of the VMS sign, camera, and point-to-point radio components, the conduit is considered incidental extending to 5 feet beyond the outside limits of the structure foundations. conduit mounted on the structure

- Removing and disposing of existing concrete cabinet foundation and galvanized steel sign conduit
- Furnishing and installing utility power and communication, all utility connections, attachments, hardware, meters, disconnects, associated cabling and all equipment required to install utilities associated with VMS installation.
- Installing VMS Ground Mounted Control Cabinet
- VMS installation, configuration and electrical and communication testing, associated with VMS board and the VMS controller including full compensation for furnishing, installing, erecting, and testing: and all materials, labor, equipment, tools, miscellaneous hardware and incidentals necessary to complete the work.

Construction of ground mounted cabinet foundation is not included with Pay Item 645.1241 or 645.1243, but paid for separately under Pay Item 626.38

No additional compensation will be made for items replaced as a result of damage occurring during the modification or relocating of existing overhead signs.

Final payment will not be made until the system is fully operational, tested, and accepted by the Maine Turnpike Authority.

Payment will be made under:

| Pay Item | | Pay Unit |
|---|---|---|
| 645.1241 | Replace Overhead Sign Structure and Walkway and Install VMS Cider Hill Road -MM 6.20 | Lump Sum |
| 645.1243 | Replace Overhead Sign Structure and Walkway and Install VMS Holmes Road -MM 43.00 | Lump Sum |

SPECIAL PROVISION

SECTION 645

HIGHWAY SIGNING

(Replace VMS at Existing Side Mount Butterfly Structures)

645.01 Description

The following paragraph is added:

This work shall consist of the removal and disassembly of the existing Variable Message Signs (VMS) and walkways at the side mount locations specified herein and as shown on the plans. The Contractor shall dispose existing VMS and walkway components. The Contractor shall install new VMS (provided by MTA) and controller cabinet (provided by MTA) on the existing side mount butterfly structures with all new hardware. The work shall also consist of installing and tuning a CCTV camera (provided by MTA), including necessary conduit, riser, and communications cables at the locations signified in the plans.

The side mount sign structure locations that require VMS replacement and walkway removal are as follows:

- Exit 7 Spur Road Westbound with Camera
- Exit 19 Sandford Road Eastbound
- Exit 19 Sandford Road Westbound **(EXISTING STRUCTURE RELOCATED ON NEW FOUNDATION)**
- Exit 25 Fletcher Street Westbound
- Exit 45 Route 703 Westbound with Camera

The VMS, Controller Cabinet, and Camera shall be installed in accordance with Special Provision 650.

This work includes the following:

- Removal and disassembly of the existing side mount VMS, walkway components, and conduits/wiring. The VMS, walkway assembly components, and existing conduit/wiring shall be disposed of by the Contractor.
- Removal of existing controller cabinet. The existing controller cabinet shall be stripped of contents (existing shelving to remain) and transported to, and stacked at, the MTA ITS Service Department located at Crosby Maintenance Facility Mile Marker 45.8 Southbound, or as directed by the Resident. Contents of the controller cabinet shall be disposed of by the contractor.
- Complete removal and disposal of the existing cabinet concrete foundations
- Removal of all underground conduits and associated wiring as shown and described in the plans.
- Removal of existing VMS concrete foundations at Exit 19 Sandford Road Westbound to 5 feet below existing grade;

- Coordinating with utilities.
- Disassembly and relocation of the Wells Exit Sandford Road Westbound Sign Structure on a new drilled shaft foundation.
- MTA shall provide the new VMS sign and cabinet for Contractor installation in accordance with Special Provision 650.
- MTA shall provide the new CCTV camera for Contractor installation in accordance with Special Provision 650 as called for.
- Installation of the VMS on existing structure, new controller cabinet, and all labor, materials, and equipment required for the VMS to be fully operational. This includes all wiring, electrical work from the existing service pole or power source, and other incidentals required to complete the work. Location of controller cabinet shall be determined in the field by the Resident Engineer in coordination with the Director of MTA ITS
- Furnishing, sizing, and installing all electrical conductors and communication cables in conduit associated with the VMS, camera, and point-to-point radio, including terminations and connectors.
- Repair of the grout pads underneath the existing sign structure column base plates as shown in the Plans.
- Wrapping space between base plate and top of foundation with AWG #16 stainless steel wire cloth with ¼" maximum opening at Exit 19 Sandford Road Westbound
- Repairing areas of erosion around the sign structure foundations.
- Restoration of disturbed ground area to meet or exceed existing conditions including loam, seed, and mulch

645.02 General

The following paragraphs are added:

Removal and replacement of the VMS shall be completed in accordance with the details as shown on the Plans and provided in these Specifications. Field drilled holes on the existing VMS support brackets may be required to align with the z-bracket of the new VMS.

**All dimensions related to the butterfly sign structure shown on the plan are assumed. The Contractor shall field measure all sign structure dimensions shown in the plans prior to installation of the new VMS**. The Contractor shall submit field measured drawings considering field measured dimensions for the VMS support system for review and approval by the Turnpike. The submittal shall include a copy of the Contractor's field measurements.

VMS installation shall be completed within the lane closure and traffic stoppage periods noted in Specification 652 – Maintenance of Traffic.

Any damage caused to existing sign structure by the Contractor shall be repaired or replaced by the Contractor at no additional cost to the Authority.

Ground mounted control cabinet foundation shall be constructed as shown in the Plans and in accordance with Standard Specification Section 626 and Special Provision Section 626.

645.021 Materials

The following is added:

| | |
|---|---|
| Structural Steel | 713.01 |
| Heavy-Hex Structural Bolts, Washers, Nuts and DTI's | 713.02 |

All bolts, nuts, connectors and miscellaneous hardware required for installation of the VMS support brackets and walkway assembly shall be new and in accordance with the provisions of Standard Specification 504 – Structural Steel.

All replacement structural steel shall be in accordance with the materials listed in the Plans and shall be hot-dip galvanized after fabrication in accordance with the requirements of Standard Specification 504 – Structural Steel.

For conduit and electrical material requirements see Special Provision 650.

645.023 Support Structures

The following paragraph shall replace the second paragraph under section b. Bridge, Cantilever, and Butterfly Type Sign Supports:

Signs shall be placed on the existing support structure to accommodate the minimum height requirement shown on the Plans – see Standard Specification Section 645.06. The Contractor shall use the Contract Drawings in order to determine the approximate horizontal placement of signs. Installation shall be in accordance with Section 645.06 – Installation of Type I Signs.

645.071 Removing and Replacing VMS and Removing Walkway

The Contractor shall furnish a written plan and procedures to the Authority for the removal of the existing VMS, the erection of the installation of the new VMS and walkway removal. The installation of VMS shall be in accordance with:

1. AASHTO "Standard Specifications for Structural Supports for Highway Traffic Signs, Luminaries and Traffic Signals";
2. FHWA Guidelines for the Installation, Inspection, Maintenance and Repair of Structural Supports for Highway Signs, Luminaires, and Traffic Signals;

The erection plan shall include the number and location of crane(s), the weight of the pick, crane capacities, bracing locations and all other pertinent information needed to demonstrate the VMS can be safely erected and assembled.

When the material from an existing structure is specified on the plans to be retained by the Authority the Contractor shall carefully dismantle it, and all materials, except those that may be specified to be reused in the new structure, shall be loaded on trucks, transported and neatly stacked by the Contractor at the location specified on the Plans.

All materials not specified to be retained by the Authority shall become property of the Contractor and shall be removed from the site at the completion of the Project. The Contractor shall provide the Resident with an affidavit stating the final location of all disposed material and that the material was disposed of in accordance with the Maine Department of Environmental Protection Solid Waste Regulations.

Contractor shall completely remove existing concrete cabinet foundations.

The galvanized sign conduit shall be installed in accordance with Standard Specification Section 626 and Special Provision Section 626.

Areas of existing corrosion on existing components to remain shall be repaired as directed by the Resident. Repairs shall be in accordance with ASTM *A 780, Standard Practice for Repair of Damaged and Uncoated Areas of Hot-Dip Galvanized Coatings* (A 780), Annex A1 or A3. All cold galvanizing repair materials shall be brush applied ZRC Cold Galvanizing Compound, manufactured by ZRC Worldwide. Application shall be in accordance with the manufacturer's written specifications.

See Special Provision 650 for VMS and Controller Cabinet installation requirements.

## 645.08 Method of Measurement

Replacement of the VMS and Removal of the Walkway on the existing side mount sign structures will be measured by each unit for a fully operational system in place in accordance with the Contract Plans and these Specifications.

## 645.09 Basis of Payment

The accepted quantity of removal, disassembly and relocation of overhead sign structure and installing new VMS and walkway will be paid for at the contract lump sum price, which price shall be full compensation for all materials, equipment, labor and hardware necessary to remove, disassemble and relocate the overhead sign structure and install the new VMS and walkway in accordance with the Specifications and details as shown on the Plans.

The Lump Sum Payment for Replacement of the VMS and Removal of the Walkway on the existing side mount structures will be paid for at the contract unit price each. Such price shall be full compensation for the work shown in the plans, described in the special provisions and including but not limited to the following:

- All materials, equipment, labor and hardware necessary to remove the existing VMS, walkway, and controller cabinet in accordance with the Specifications and details as shown on the Plans. This work includes disposal of the existing VMS and walkway components.
- Furnishing, sizing, and installing all electrical conductors and communication cables associated with the VMS, camera, and point-to-point radio, including terminations and connectors for a complete and operational system.
- Removing and disposing of existing concrete cabinet foundation and galvanized steel sign conduit

- Furnishing installing utility power and communication, all utility connections, attachments, hardware, meters, disconnects, associated cabling and all equipment required to install utilities associated with VMS installation.
- Installing VMS Ground Mounted Control Cabinets.
- VMS installation, configuration and electrical and communication testing, associated with VMS board and the VMS controller including full compensation for furnishing, installing, erecting, and testing: and all materials, labor, equipment, tools, miscellaneous hardware and incidentals necessary to complete the work.
- Relocating the Wells Exit 19 Sandford Road Sign Structure onto a new foundation.
- Repairing or Regrouting the existing grout pads underneath the overhead sign structure column supports as shown on the Plans.
- Apply cold galvanizing compound to areas of corrosion.

Construction of ground mounted cabinet foundation is not included with Pay Item 645.1245 but paid for separately under Pay Item 626.38

No additional compensation will be made for items replaced as a result of damage occurring during the modification or relocating of existing overhead signs.

Final payment will not be made until the system is fully operational, tested, and accepted by the Maine Turnpike Authority.

Payment will be made under:

| Pay Item | | Pay Unit |
|---|---|---|
| 645.1245 | Replace VMS at Existing Side Mount Butterfly Structures | Each |

SPECIAL PROVISION

SECTION 650

VARIABLE MESSAGE SIGN

(Install MTA Provided Variable Message Signs)

650.01 Description This work shall consist of installing, connecting, configuring, and testing a new variable message sign (VMS), VMS controller, ground mounted control cabinet, cameras and point-to-point radio antennas. The VMS support structures and foundations as well as underground conduits, wiring for power service and cables for communications, are specified elsewhere in the Contract Documents.

MTA supplied VMS and Control Cabinets shall be installed at the following locations:

- Cider Hill Road (Northbound) MM 6.20 (Overhead Sign)
- Limerick Road (Southbound) MM 28.30 (Overhead Sign)
- Holmes Road (Northbound) MM 43.00 (Overhead Sign)
- Mountain Road (Southbound) MM 53.40 (Overhead Sign)
- Exit 7 Spur Road (Westbound) (Side Mount Sign)
- Exit 19 Sandford Road (Eastbound) (Side Mount Sign)
- Exit 19 Sandford Road (Westbound) (Side Mount Sign)
- Exit 25 Fletcher Street (Westbound) (Side Mount Sign)
- Exit 45 Route 703 (Westbound) (Side Mount Sign)

This work includes the following:

- MTA shall provide the new VMS sign and cabinet for Contractor Installation. The VMS is a DAKTRONICS model VF-2020-96-384-20-RGB at overhead sign structure locations and DAKTRONICS model VF-2420-80x272-20 RGB at side mount structure locations. Cabinet shall be a Vanguard 334 Equipment Cabinet. See Appendix A for sign details.
- VMS and Cabinet will be available to the Contractor for transport from the MTA Kennebunk Maintenance Area Mile 25.3. Before the Contractor takes possession, the Contractor and the MTA Director of ITS shall jointly perform a visual inspection of both items. The Contractor shall prepare a written record of the inspection, including any visible damage, apparent defects, or missing components, and shall photograph any such conditions. Both parties shall sign and date the inspection record before loading. The Contractor shall provide a copy to the Resident and notify the Resident of any condition that may affect installation or operation before proceeding with pickup. The Contractor shall take custody of the equipment when loading begins and shall be responsible for loading, securing, transporting, unloading, storing, protecting, and installing the equipment.

- Installation of the VMS on vertical support members as shown in the Plans, new controller cabinet, and all labor, materials, and equipment required for the VMS to be fully operational. Location of controller cabinet shall be determined in the field by the Resident Engineer. MTA shall provide an AXIS Q6020E/Q6088E CCTV camera assembly for installation by the Contractor. Mounting configurations shall vary by location; refer to the Plans for site-specific details. The Contractor shall orient the riser and aim the cameras within the Q6020E as directed by the MTA Director of ITS. The Contractor shall furnish, install, and terminate shielded CAT 6A cable between the controller cabinet and the camera assembly, see special provision 655 for cable specification. Apply anti-seize compound to all threaded hubs on the camera mount before assembly.
    - The Contractor shall furnish and install the following accessories, as required by site conditions and as shown on the Plans:
        - Camera Parapet Mount: AXIS TQ6501-E.
        - Camera Pendant Kit: AXIS T94A01D.
        - Camera Wall and Pole Mount: AXIS TQ5001-E with stainless steel straps
        - Camera Riser Bracket: Pelco Astro Bracket Triton AB-3050 with hinged clamp. Tighten hardware in accordance with the manufacturer's recommendations. **Do not use an impact gun.**
    - The proposed camera locations are as follows:
        - Cider Hill Road (Northbound) MM 6.20 (Overhead Sign)
        - Limerick Road (Southbound) MM 28.30 (Overhead Sign)
        - Holmes Road (Northbound) MM 43.00 (Overhead Sign)
        - Mountain Road (Southbound) MM 53.40 (Overhead Sign)
        - Exit 7 Spur Road (Westbound) (Side Mount Sign)
        - Exit 45 Route 703 (Westbound) (Side Mount Sign)
- Junction Boxes shall be provided and installed by the contractor on the VMS Structure. The number of Junction boxes will vary by location, reference plans for more information. The Junction Boxes are generally to be used to transition wire runs from the vertical structure column to the conduit installed on the horizontal truss members. Junction box shall be installed to allow for access from a bucket truck with the ability to fully open the hinged door.
    - Junction box shall be a 20"x20"x8" NEMA 4X, Formed 14 gauge 316 Stainless Steel with continuous hinged door with clamps. Junction Box provided shall be Hammond Manufacturing 1418N4S16D8 with PMK Pole Mounting Kit with stainless steel straps or approved equal.
- Contractor shall label all load centers with an engraved plastic nameplate including panel designation, voltage and phase, and what feeds it and where that source is located per NEC.

- Contractor shall label all Junction Boxes mounted to VMS structure with an engraved plastic nameplate including junction box designation "communication or electrical" and what feeds it and where that source is located.
- All conduit mounted on VMS structure shall be galvanized rigid metal of sufficient size (2" min) for number of conductors required per NEC and minimum bend radius. Electrical wiring and communication cables shall be installed in separate conduits.
- All hardware used to connect the conduits, cameras, junction boxes and all other various components to the structure and/or VMS signs including but not limited to pipe hangers, bolts, nuts, and washers shall be stainless steel. Male Threads of conduit and hardware shall receive an application of anti-seize.
- All Flexible conduits shall be Liquid tight metallic conduit. All conduit shall be watertight with flexible PVC coating over galvanized steel flex tubing.
- Where used, fiber optic cable shall have 12 strands, meet the requirements of Special Provision 655 and of Daktronics' specifications as shown in Appendix A. All strands shall be terminated in an approved demarcation panel provided by the contractor. Patch cables shall be used to make the final connections to equipment. Patch cables shall be of Daktronics' specification and of a length sufficient to make the connection but kept neat in appearance. All cables and strands shall be labeled via digital means, handwritten labels will not be permitted.
- Installing utility power, configuring, and system testing the variable message sign (VMS), VMS controller, ground mounted control cabinet, in its new location as shown on the plans. The contractor shall make all final connections to power and communications but shall apply no power to any component until accepted. The contractor shall make a reasonable estimation to the Resident or designee when they will be ready for acceptance testing.
- The VMS and associated controls shall be fully operational within 3 weeks after the VMS installation.

650.02 General

Installation of the VMS and Control Cabinet shall be completed in accordance with the details as shown on the Plans and provided in these Specifications.

VMS installation shall be completed within the lane closure and traffic stoppage periods noted in Specification 652 – Maintenance of Traffic.

All materials required for installing and connecting to utility power and configuring the proposed VMS, including conduit, shall be new.

Any damage caused to VMS and electrical components by the Contractor shall be repaired or replaced by the Contractor at no additional cost to the Authority. Before beginning repair or replacement, the Contractor shall submit a written corrective action plan to the Resident for review by the MTA Director of ITS. The plan shall identify the affected equipment, describe the nature and extent of the damage, and detail the proposed repair procedures or replacement equipment. The

Contractor shall develop the plan in conjunction with the VMS manufacturer and shall obtain the MTA Director of ITS's written acceptance before proceeding with the repair or replacement.

Workmanship shall conform to the requirements of: NEC, NESC, ASTM Standards, and the ANSI, the local Utility Companies, the State of Maine, Manufactures Specifications and any local ordinances that may apply except when otherwise noted on the Plans or in the Special Provisions.

Ground mounted control cabinet foundation shall be constructed as shown in the Plans and in accordance with Standard Specification Section 626 and Special Provision Section 626.

650.03 Materials

The following is added:

| | |
|---|---|
| Steel Conduit | 715.02 |
| Non-metallic Conduit | 715.03 |
| Conductors | 718.12 |

Above ground conduit shall be galvanized rigid metal and underground conduit shall be schedule 80 PVC.

All conduit bodies attaching to rigid metallic conduit shall be of Mogul type as manufactured by Eaton-CrouseHinds, all conduit bodies shall be of like-material to the conduit and hot-dipped galvanized with all components suitable for installation in wet, outdoor environments

Electrical materials shall meet the standards herein, Special Provision 655, local and public utility codes, and the National Electrical Code (NEC).

All grounding and electrical installations shall meet the requirements of NEC, as well as all applicable state, local, and applicable public utility codes. All grounding shall meet the requirements of the manufacturers of the devices installed on the project. If the manufacturers' requirements are more stringent than those of the national, state, and local codes, then the manufacturers' grounding requirements shall apply.

Lightning suppression materials and installation shall meet current NFPA 780 standards and meet requirements in Special Provision 655.

The Contractor shall furnish and install Transient Voltage Surge Suppression (TVSS) device(s) for all power and communications conductors leaving the equipment cabinets, and ITS equipment, including but not limited to power service, and power and communications for all devices that are external to the cabinet.

650.04 Installing the VMS

The VMS shall be provided by MTA and shall be DAKTRONICS model VF-2020-96-384-20-RGB at Overhead Sign Structure locations and DAKTRONICS model VF-2420x80x272-20 RGB at Side Mount Structure locations. VMS shall be mounted using Zee bars attached along the top, bottom, and center of the VMS panel. The Zee bars shall be bolted to the steel supports on each side of the web as shown in the plans.

The VMS Control Cabinet shall be provided by MTA and shall be a Vanguard Model 334 Equipment Cabinet and compatible with the DAKTRONICS sign model.

The Contractor shall furnish a written plan and procedures to the Authority for the erection of the installation of the new VMS on support brackets and the disassembly and relocation of the Wells Sanford Road Sign Structure on a new foundation

The galvanized sign conduit shall be installed in accordance with Standard Specification Section 626 and Special Provision Section 626.

Contractor shall maintain or remove and reset the existing radio communication antenna located on the overhead and side mount sign structures.

650.05 Conduit & Wire Installation

The Contractor shall furnish and install conduit and trenching in accordance with Standard Specification Section 626 and Special Provision 626.

The Contractor shall install mule lines in all conduits, including occupied and spare conduits. Secure both ends of each mule line to prevent accidental withdrawal. Install pull bells at all open ends of all conduits, spares and occupied, and seal around cables and mule lines.

Ground Mounted Cabinet Foundation shall be constructed per section 626 of the Standard Specifications and Standard Detail 626(05). Conduit feeds to ground mounted cabinet foundation shall include two (2) 3" PVC for electrical power to cabinet with two (2) 3" conduits out for controls and power to VMS respectively or as shown on the plans. Embedded conduit stubs shall not be paid for separately but are included in the ground mounted cabinet foundation item.

Cable Installation shall be in accordance with Section 634.04 – Cable Installation. Contractor shall be responsible for contacting Dig-Safe and OK to Dig prior to excavating.

The Authority shall perform the final manufacturer acceptance testing with factory trained personnel. At the contractors request the Authority will provide bona fide evidence of this training.

650.06 AC Power Systems

The Contractor shall provide utility power systems to VMS systems as indicated in the Contract Documents.

a. The Contractor shall make the necessary arrangements with the utility company to ensure having needed utility service available at the time of equipment testing and turn-on. Any utility energization, connection, or disconnection delays will not be a valid reason for a time extension. The Contractor shall be responsible for all utility charges, including connection and monthly service charges, until System Acceptance. System acceptance is considered completed when the testing and commissioning is completed as described in Special Provision 650.07.

b. The Contractor shall adhere to all applicable NEC, IEEE 1100-1992, UL 1459, and UL 1950 standards and practices.

c. The metered service shall include a 100 amp main disconnect with lever bypass.

650.07 Testing

The Contractor shall notify the Resident no less than seven (7) days prior to the beginning of any equipment or systems testing. MTA factory trained personnel will perform sign commissioning. The Contractor shall have personnel present during all testing who are familiar with the installation and capable of troubleshooting issues that arise. Before system testing begins, the Contractor shall coordinate with the Resident and the Director of ITS to ensure safe access is provided by the Contractor to all system components. Contractor shall be responsible for any required maintenance of traffic measures to facilitate commissioning.

All power connections shall be completed along with fiber terminations including OTDR testing results of fiber per Special Provision 655. The Commissioning agent will power up sign and controller as part of start up, contractor shall not power up sign or controller. The MTA will provide a testing plan for the VMS system.

Testing shall provide verification and documentation that all requirements as detailed in this Section and the Plans are met. The Test Plans developed by the MTA are to provide a mechanism that ensures that all contract requirements have been met and tested successfully and verified.

650.08 VMS Ground Mounted Control Cabinet

The VMS Control Cabinet will be provided by MTA and shall be mounted and installed at the location shown in the Plans, and in conformance with all requirements shown in the Plans. This work shall include all wiring, cabling, and connections from the VMS cabinet to the VMS panel.

- A concrete work pad shall be installed in front of the cabinet door. The pad shall be placed on a minimum of four inches of compacted granular material. The pad shall be set with at least one percent grade such that any water on the pad shall flow away from the cabinet. The VMS cabinet shall be secured to the concrete foundation provided by the Contractor as shown in the Contract Documents. Where the work pad is installed on a slope, the depth of the pad shall be increased such that there is at least two inches of the concrete pad below grade.
- All exposed, high voltage electrical terminals shall be insulated with non-conducting material such as rubber boots or silicon/rubber caulking.
- The VMS cabinet shall be electrically bonded to all of its associated metallic VMS support structure grounding systems, as described elsewhere in this document or in the Contract Documents.
- The Contractor shall furnish in a watertight container a control cabinet-wiring diagram. Three sets of identical wiring diagrams shall be furnished for each cabinet.

650.09 Method of Measurement

Installing the Variable Message Signs at each location shall be paid as described in Special Provision's 645.

# SPECIAL PROVISION

## SECTION 652

## MAINTENANCE OF TRAFFIC
(October 5, 2023)

MaineDOT Standard Specification 2014 Edition Section 652 – Maintenance of Traffic and the Maine Turnpike Authority 2016 Supplemental Specification Section 652 – Maintenance of Traffic are deleted in their entirety and replaced with the following:

### 652.1 Description

This work shall consist of furnishing, installing, maintaining and removing traffic control devices necessary to provide reasonable protection for motorists, pedestrians and construction workers in accordance with these Specifications, the applicable provisions of Section 105.4.5 - Special Detours, and the plans.

Traffic control devices include signs, signals, lighting devices, markings, barricades, channelizing, and hand signaling devices, portable light towers, truck mounted impact attenuators, portable rumble strips, portable speed trailers, sequential warning lights, traffic officers, and flaggers.

### 652.2 Materials

All maintenance of traffic control devices shall conform to the requirements of the latest edition of the MUTCD, NCHRP 350 guidelines and all Traffic control devices shall meet Manual for Assessing Safety Hardware (MASH) 16 guidelines if date of manufacture was after December 31, 2019.

All signs shall be fabricated with high intensity fluorescent retroreflective sheeting conforming to ASTM D 4956 - Type VIII, or Type IX (prismatic). All barricades, drums, and vertical panel markers shall be fabricated with high intensity orange and white fluorescent retroreflective sheeting conforming ASTM D 4956 - Type VII, Type VIII, or Type IX (prismatic).

Construction signs shall be fabricated from materials that are flat, free from defects, retroreflectorized, and of sufficient strength to withstand deflections using a wind speed of 80 miles/hr.

#### 652.2.2 Signs

Only signs with symbol messages conforming to the design of the Manual of Uniform Traffic Control Devices (MUTCD) shall be used unless the Resident approves the substitution of word messages.

Any proposed use of temporary plaques to cover text or to change text shall be approved by the resident. All signs or proposed plaques shall have a uniform face and be constructed from similar sheeting.

All signs shall be new, or in like new condition and maintained in like new condition throughout the project duration. Signs shall be cleaned just prior to installation and throughout the project utilizing a method that will not damage the reflective sign sheeting.

652.2.3 Flashing Arrow Board

Flashing Arrow Boards must be of a type that has been submitted to AASHTO's National Transportation Product Evaluation Program (NTPEP) for evaluation and placed on the Maine Department of Transportations' Approved Products List of Portable Changeable Message Signs & Flashing Arrow Boards.

Flashing Arrow Boards units shall meet requirements of the current Manual on Uniform Traffic Control Devices (MUTCD) for Type "C" panels as described in Section 6F.56 - Temporary Traffic Control Devices. Flashing Arrow Boards shall have matrix of a minimum of 15 low-glare, sealed beam, Par 46 elements capable of either flashing or sequential displays as well as the various operating modes as described in the MUTCD, Chapter 6-F. If a Flashing Arrow Board consisting of a bulb matrix is used, each element should be recess-mounted or equipped with an upper hood of not less than 180 degrees. The color presented by the elements shall be yellow.

Flashing Arrow Board elements shall be capable of at least a 50 percent dimming from full brilliance. Full brilliance should be used for daytime operation and the dimmed mode shall be used for nighttime operation. Flashing Arrow Board shall be at least 96 inches x 48 inches and finished in non-reflective black. The Flashing Arrow Board shall be interpretable for a distance not less than 1 mile.

Operating modes shall include, flashing arrow, sequential arrow, sequential chevron, flashing double arrow, and flashing caution. In the three arrow signals, the second light from the arrow point shall not operate.

The minimum element on-time shall be 50 percent for the flashing mode, with equal intervals of 25 percent for each sequential phase. The flashing rate shall be not less than 25 nor more than 40 flashes per minute. All on-board circuitry shall be solid state.

Primary power source shall be 12 volt solar with a battery back-up to provide continuous operation when failure of the primary power source occurs, up to 30 days with fully charged batteries. Batteries must be capable of being charged from an onboard 110 volt AC power source and the unit shall be equipped with a cable for this purpose.

Controller and battery compartments shall be enclosed in lockable, weather-tight boxes.

The Flashing Arrow Board shall be mounted on a pneumatic-tired trailer or other suitable support for hauling to various locations, as directed. The minimum mounting height of an arrow panel should be 7 feet from the roadway to the bottom of the panel.

The face of the trailer shall be delineated on a permanent basis by affixing retro-reflective material, known as conspicuity material, in a continuous line as seen by oncoming drivers.

A portable changeable message sign may be used to simulate an arrow panel display.

652.2.4 Other Devices

Vertical panel markers shall be orange and white striped, 8 inches wide by 24 inches high. On the Interstate System, vertical panel markers shall be orange and white striped, 12 inches wide by 36 inches high.

Cones shall be orange in color, a minimum of 28 inches high, and retro-reflectorized. Retro- reflection shall be provided by a white bands of retro-reflective sheeting conforming to the MUTCD. All cones utilized on the project shall be new or in like new condition and shall have a consistent design/appearance.

Drums shall be of plastic or other yielding material and shall be a minimum of 36 inches high and a minimum of 18 inches in diameter. There shall be at least two retro-reflectorized orange and at least two retro-reflectorized white stripes a minimum of 4 inches wide on each drum. All drums utilized on the project shall be new or in like new condition and shall have a consistent design/appearance.

Flaggers shall use a STOP / SLOW handheld paddle as the primary and preferred hand signaling device. Flags shall only be limited to emergencies. STOP / SLOW paddles shall have high intensity prismatic retro reflective sheeting, have an octagonal shape on a rigid handle and shall be at least 18 inches wide with letters at least 6 inches high and shall be constructed from light semi-rigid material. The STOP (R1-1) face shall have white letters and a white border on a red background. The SLOW (W20-8) face shall have black letters and a black border on an orange background.

STOP / SLOW paddles shall also incorporate either white or red flashing lights on the STOP face and white or yellow flashing lights on the SLOW face of the paddle and always be in use.

Paddles must conform to one of the following patterns:

A. Two white or red lights (colors shall be all white or all red), one centered vertically above and one centered vertically below the STOP legend; and/or two white or yellow lights (colors shall be all white or all yellow), one centered vertically above and one centered vertically below the SLOW legend.

B. Two white or red lights (colors shall be all white or all red), one centered horizontally on each side of the STOP legend; and/or two white or yellow lights (colors shall be all white or all yellow), one centered horizontally on each side of the SLOW legend.

C. One white or red light centered below the STOP legend; and/or one white or yellow light centered below the SLOW legend.

D. A series of eight or more small all white or all red lights no larger than 1/4 inch in diameter along the outer edge of the paddle, arranged in an octagonal pattern at the eight corners of the border of the STOP face; and/or a series of eight or more small all white or all yellow lights no larger than 1/4 inch in diameter along the

outer edge of the paddle, arranged in a diamond pattern along the border of the SLOW face; or

E. A series of white lights forming the shapes of the letters in the legend. Flashing light patterns shall be compliant with Section 6E.03 Hand Signaling Devices in the most current version of the Manual on Uniform Traffic Control Devices.

All flashing light patterns on the STOP / SLOW paddle shall be visible from a minimum distance of 1000 feet.

Type I barricades shall be 2 feet minimum, 8 feet maximum in length with an 8 inch wide rail mounted 3 feet minimum above the ground. Type II barricades shall be 2 feet in length with two 8 inch wide rails, and the top rail shall be mounted 3 feet minimum above the roadway. Type III barricades shall be 8 feet in length with three 8 inch wide rails, and the top rail shall be mounted 5 feet minimum above the roadway. The cross members of all barricades shall be of ½ or ⅝ inch thick plywood or other lightweight rigid material such as plastic, fiberglass or fiber wood as approved by the Resident. The predominant color for supports and other barricade components shall be white, except that unpainted galvanized metal or aluminum components may be used.

652.2.5 Portable Changeable Message Sign

Portable-Changeable Message Signs (PCMS) will be furnished by the Contractor and shall be Ver-Mac PCMS-1210 or an approved equal. The face of the PCMS trailer shall be delineated on a permanent basis by affixing retro-reflective material, known as conspicuity material, in a continuous line as seen by oncoming drivers. PCMS's shall be located and relocated to locations approved by the Resident within the Project limits for the duration of the Project.

Features to the Ver-Mac PCMS shall include:

- An all-LED display.
- Be legible from a distance of 1,000 feet.
- Have three (3) lines available for messages.
- Be NTCIP compliant (NTCIP 1203 & 1204).
- Be capable of being programmed by a remote computer via a data (IP over Cell) cellular modem connection.
- Have GPS location capability by adding on a GPS device capable of providing GPS location remotely to the MTA Communications' Center.
- Be programmable by Vanguard Software by Daktronics.

The Contractor shall complete and/or provide the following:

- Submit a catalog cut shop drawing to the Resident of all proposed equipment for review and approval.

- Establish and pay for a data cellular account so that PCMS may be remotely programmed and operated from the MTA Communications' Center.

- Provide to the Authority technical support from the PCMS manufacturer that may be necessary to integrate the PCMS into the MTA software platform (Vanguard Software by Daktronics).

- Provide the manufacturer's software necessary to change the PCMS messages remotely from the MTA Communications' Center and the Resident's computer if necessary or requested.

- Provide training on the operation of the PCMS to the Resident and the MTA Communications' Center representative.

- Make all PCMS on the Project work site available to the MTA for any/all emergency situations as defined by the MTA. This shall include the preemption of any messages running at the time of need as approved by the MTA and the Resident.

The Contractor shall also:

- Furnish, operate, relocate and maintain the PCMS as approved or requested by the Resident.

- Be responsible for the day-to-day programming and operation of the PCMS for Project purposes.

The PCMS(s) shall be on-site, with data cellular account established, GPS location capable, and all training required complete within one month after mobilization or seven days prior to implementing traffic shifts, detours or stoppages, whichever is sooner. Implementation of traffic shifts, detours, or stoppages of traffic will not be allowed without PCMS boards on-site with the specified MTA Communications' Center Software Platform integration and training.

652.2.5 Truck Mounted Attenuator

The truck mounted attenuator system shall conform to the following requirements:

- Truck and attached attenuator shall conform to the NCHRP Report 350, Test Level 3 criteria or MASH if manufactured after 2019.
- Amber, Green, white or any variation of those colors strobe lights with 360-degree visibility.
- An arrow light bar fixed to the vehicle.
- The attenuator shall be mounted to a vehicle with a minimum weight of 24,000 lbs. unless otherwise specified.

Installation: **The TMA shall be located in the closed lane adjacent to active traffic; for double lane closures, only the outer closed lane requires the TMA**. If a buffer zone is required the TMA shall not be located in the buffer zone. The shadow vehicle

shall have its front wheels turned away from the work area and from traffic, have parking brake set, and be put in park if an automatic transmission; or if a manual transmission it shall have its front wheels turned away from the work area and from traffic, have parking brake set and should be placed in gear and shut off if possible while still maintaining warning lights. If length of time or weather are a concern for the battery since the warning lights must be maintained the engine should be started and run periodically for battery recharging. No other vehicles or equipment shall park in front of the shadow vehicle or within the buffer space behind the shadow vehicle. For placement details, reference the Manual on Uniform Traffic Control Devices (MUTCD).

A Truck Mounted Attenuator **shall** be utilized in all lane closures, and shoulder closures, where workers are not protected by other positive means (i.e., closures that do not include temporary concrete barrier). If work is being completed behind guardrail a TMA shall be required for all work that is being completed within the deflection zone of the guardrail (minimum of four feet behind the guardrail post).

The placement and positioning of the vehicle shall be in accordance with the Manual on Uniform Traffic Control Devices and the manufacturer's recommendation. TMAs used on the Turnpike mainline shall have a minimum weight of 24,000 lbs and shall provide a 200 foot shadow distance from vehicles or the work zone. **For lane and shoulder closures in excess of 3,000 feet containing multiple work zones a TMA shall be used at each work zone.**

If a Truck Mounted Attenuator is not used as described above, then it will be considered a Traffic Control Plan violation and result in a reduction of payment as outlined in Section 652.

652.2.6 Sequential Flashing Warning Lights

When included in contracts as a bid item Sequential Flashing Warning Lights on drums used for merging tapers and shifting tapers during nighttime operation for project use. The purpose of these lights is to assist the motorist in determining which direction to merge or shift and to reduce the number of late merges resulting in devices being struck and having to be reset to maintain positive guidance at the merge point. The successive flashing of the lights shall occur from the upstream end of the taper to the downstream end of the taper in order to identify the desired vehicle path.

The Sequential Flashing Warning Lights shall meet all of the requirements for warning lights within the current edition of the MUTCD. Each light unit shall be capable of operating fully and continuously for a minimum of 500 hours when equipped with a standard battery set. Each light in sequence shall be flashed at a rate of not less than 55 times per minutes and not more than 75 times per minute. The flash rate and flash duration shall be consistent throughout the sequence.

Sequential Flashing Warning Lights shall be "Pi-Lit" Sequential Barricade Warning Lamps or an approved equal.

Sequential Flashing Warning lights are to be used for merging and shifting tapers that are in place during the nighttime hours (12-hours when ambient light is dimmed). These lights shall flash sequentially beginning with the first light and continuing until the final light at the beginning of a tangent section.

The Sequential Flashing Warning Lights shall automatically flash in sequence when placed on the drums that form the merging or shifting tapers.

The number of lights used in the drum taper shall equal one half the number of drums used in the taper.

Drums are the only channelizing device permitted for mounting the Sequential Flashing Warning Lights.

The Sequential Flashing Warning Lights shall be weather independent and visual obstruction shall not interfere with the operation of the lights.

The Sequential Flashing Warning Lights shall automatically sequence when placed in line in an open area with a distance between lights of 25 to 150 feet. A 10-foot stagger in the line of lights shall have no adverse effect on the operation of the lights.

If one light fails, the flashing sequence shall continue. Non-sequential flashing is prohibited.

652.2.7 Automated Trailer Mounted Speed Sign

**The Contract will furnish, operate, and maintain Automated Trailer Mounted Speed Limit Sign(s) for project use. The automated speed sign shall be required when there is a Work Zone Speed Limit in place.** The Contractor shall furnish, operate, and maintain the Automated Trailer Mounted Radar Speed Limit Signs during the project operations

Trailer mounted speed limit signs shall be self-contained units including sign assembly, flashing lights, directional radar to measure speed limits, a regulatory speed limit sign, andpower supply specifically constructed to operate as a trailer-mounted sign. The preferred color of the unit shall be “construction orange”.

Base material for the regulatory speed limit signs shall be weatherproof, rigid substrate specifically manufactured for highway signing and meet the retro-reflective sheeting application requirements of the sheeting manufacturer.

Sign text shall consist of the letters, digits and symbols either applied by stick-on or silk screen, to conform to the dimensions and designs indicated in the Contract, MUTCD and/or FHWA Standard Highway Signs. The materials and methods shall be in accordance with standard commercial processes.

“Work Zone” construction signs shall be mounted on the trailer unit above the regulatory speed limit sign. (see attached graphic details).

Signs and secondary signs shall follow the MUTCD for minimum mounting heights.

The power supply shall be either full battery power with solar panel charging (capable of maintaining a charged battery level) and 135 amperes, 12-volt deep cycle batteries, or diesel powered generator with a fuel capacity sufficient for 10 hours of continuous operation.

Each unit shall be equipped with two mono-directional flashing lights, placed in accordance with the MUTCD, with amber lenses and reflectors, which are visible through a range of 120 degrees when viewed facing the sign. The lights shall be a minimum of 8-inch diameter, either LED, halogen, or incandescent lamps, and shall be visible for a minimum distance of one mile under daylight conditions and shall have a minimum flash rate of 40 flashes per minute. An "On" indicator light shall be mounted on the back of the signs, which is visible for at least 500 feet to provide confirmation that the flashing lights are operating.

The directional radar shall monitor approaching traffic only. The radar shall be capable of measuring speeds from 5 to 70 MPH at a distance of up to 1500 feet and shall have a high speed cut off thresh hold. Speed data shall be recorded and stored on the sign and must be made available to the Authority as requested.

All existing speed limit signs, which conflict with the construction zone trailer mounted speed limit signs shall be covered completely when the work zone speed limit is in place.

Automated Trailer Mounted Speed Limit Signs shall only be used when a work zone speed limit is in place **and shall be required when the work zone speed limit is active**. The Contractor shall manage the utilization and operation of the Automated Trailer Mounted Speed Limit Signs and if at least one is not used when work zone speed limits are in place then it will be considered a Traffic Control Plan violation and result in a reduction of payment as outlined in Section 652.

The Resident will record the actual time and location for the signs on a daily basis when the Automated Trailer Mounted Speed Limit Signs are in use.

The Automated Trailer Mounted Radar Speed Limit Sign may be placed as shown on the plans, or may replace the posted regulatory speed limit signs, or may be placed at a location within the closed lane that has a reduced speed limit.

Automated Trailer Mounted Speed Limit Signs shall be delineated with retro-reflective temporary traffic control devices while in use and shall also be delineated by affixing a retro-reflective material directly on the trailer.

Upon delivery of the Automated Trailer Mounted Speed Limit Sign and before acceptance by the Authority, the Contractor shall have a representative of the manufacturer review the condition and notify the Resident in writing, of all deficiencies noted.

The Contractor shall arrange to have all necessary repairs performed at no cost to the Authority.

To avoid impairing driver vision, the Contractor shall dim the lighted speed limit readings by 50 percent during nighttime use and restore full power lighting during daytime operation.

652.2.8 Temporary Portable Rumble Strips

If a pay item is included in the contract or the Contract desires to utilize Temporary Portable Rumble Strips this work consists of furnishing and placing temporary portable rumble strips RoadQuake 2F TPRS or an approved equal. Furnishing a temporary portable rumble strip system

includes a method to transport and move these to on-site locations where they will be used. The Contractor shall submit for approval, literature and all necessary certifications to the Maine Turnpike prior to procurement of the product.

If used, Temporary Portable Rumble Strips may not be practicable in areas where the roadway has more than two travel lanes, where volume windows do not allow for breaks in traffic to set up and monitor and adjust, or during nighttime lane closures.

Provide rumble strips where the plans show or as directed by the Resident as follows:

Prior to placing rumble strips, clean the roadway of sand and other materials, that may cause slippage.

Place one end of the rumble strips 6 inches from the roadway centerline. Extend the strips perpendicular to the direction of travel. Ensure strips lay flat on the roadway surface.

Only one series of rumble strips, placed before the first work zone, is required per direction of travel for multiple work zones spaced 1 mile or less apart. Work zones spaced greater than 1 mile apart require a separate series of rumble strips. Each lane shall use one group of temporary rumble strips.

Bracketed “Rumble Strip Ahead” and “Bump” signs shall be utilized and will be paid for under the respective construction sign pay items.

Maintain rumble strips as follows:

If rumble strips slide, become out of alignment, or are no longer in the wheel path of approaching vehicles during the work period, thoroughly clean both sides of the rumble strips and reset on a clean roadway.

Repair or replace damaged rumble strips immediately.

652.3.1 Responsibility of the Authority

The Authority will provide Project specific traffic control requirements and traffic control plans for use by the Contractor. The specific traffic control requirements for the Project are identified in Special Provision Section 652, Maintenance of Traffic (Specific Project Maintenance of Traffic Requirements). No revisions to these requirements or Plans will be permitted unless the Contractor can thoroughly demonstrate an overall benefit to the public and a Contract Modification is approved.

The Maine Turnpike Authority may erect lane closures on the mainline within the Project area to collect survey, provide layout, and for any other reasons deemed necessary by the Authority.

652.3.2 Responsibility of the Contractor

The Contractor shall provide continuous and effective traffic control and management for the Project that is appropriate to the construction means, methods, and sequencing allowed by the Contract and selected by the Contractor:

The Contractor shall ensure all jobsite personnel shall wear a safety vest labeled as ANSI 107-2004 standard performance for Class 3 risk exposures at all times. This requirement also applies to truck drivers and equipment operators when out of an enclosed cab.

652.3.3 Submittal of Traffic Control Plan

The Contractor shall provide continuous and effective traffic control and management for the Project that is appropriate to the means, methods and sequencing allowed by the Contract; and consistent with the Traffic Control Plans and Maintenance of Traffic Specifications. The Contractor is responsible for ensuring a safe environment for the Contract workforce, local road users, and turnpike users; and maintaining the safe efficient flow of traffic through the construction zone at all times during the Contract. The protocols and requirements outlined in the Contract shall be strictly enforced. The Contractor shall submit, at or before the Preconstruction Meeting, a Traffic Control Plan (TCP) that provides the following information to the Authority:

**a.** The name, telephone number, and other contact numbers (cellular phone, pager, if any) of the Contractor's Traffic Control Supervisor (TCS). The TCS is the person with overall responsibility for ensuring the contractor follows the TCP, and who has received Work Zone Traffic Control Training commensurate with the level of responsibility shown in the requirements of the Contract, and who is empowered to immediately resolve any work zone traffic control deficiencies or issues. Provide documentation that the Traffic Control Supervisor has completed a Work Zone Traffic Control Training Course (AGC, ATSSA, or other industry- recognized training), and a Supervisory refresher training every 5 years thereafter. Submit training certificates or attendance roster that includes the course name, training entity, and date of training. **State how the traffic control devices will be maintained including a frequency of inspection for both temporary and permanent traffic control devices.**

Traffic Control Training Course curriculum must be based on the standards and guidelines of the MUTCD and must include, at a minimum, the following:

1. Parts of Temporary Traffic Control Zone
2. Appropriate use and spacing of signs
3. Use and spacing of channelizing devices
4. Flagging basics
5. Typical examples and applications

The Traffic Control Supervisor, or designee directly overseeing physical installation, adjustment, and dismantling of work zone traffic control, will ensure all personnel performing those activities are trained to execute the work in a safe and proper manner,

in accordance with their level of decision-making and responsibility. The emergency contact list shall contain a listing of individuals who may be contacted during non-work hours and shall adequately respond to the request.

**b.** Proposed revisions to the construction phasing or sequencing that reasonably minimizes traffic impacts.

**c.** A written narrative and/or plan explaining how traffic and pedestrians will be moved through the Project Limits, including transitions during the change from one phase of construction to the next, as applicable.

**d.** Temporary traffic control treatments at all intersections with roads, rail crossings, businesses, parking lots, pedestrian ways, bike paths, trails, residences, garages, farms, and other access points, as applicable.

**e.** A list of all Contractor or Subcontractor certified flaggers to be used on the Project, together with the number of flaggers which will be used for each type of operation that flagging is needed. If the Contractor is using a flagging Subcontractor, then the name and address of the Subcontractor may be provided instead of a list of flaggers.

**f.** A procedure for notifying the Resident of the need to change the traffic control plan or the need to remove a lane restriction.

**g.** A description of any special detours including provisions for constructing, maintaining, signing, and removing the detour or detours, including all temporary bridges and accessory features and complete restoration of the impacted land.

**h.** The maximum length of requested contiguous lane closure. The Contractor shall not close excessive lengths of traffic lane to avoid moving traffic control devices.

**i.** The proposed temporary roadway surface conditions and treatments. The Contractor shall provide an adequate roadway surface at all times; taking into account traffic speed, volume, and duration.

**j.** The coordination of appropriate temporary items (drainage, concrete barriers, barrier end treatments, impact attenuators, and traffic signals) with the TCP.

**k.** The plan for unexpected nighttime work, the contractor shall provide a list of emergency nighttime lighting equipment and safety personnel available on-site or have the ability to have them on site within an hour of the time of need.

**l.** The plan for meeting any project specific requirements contained in special provision 105 and/or 107, and/or Section 656

**m.** The lighting plan if night work is anticipated.

The Authority will review the TCP for completeness and conformity with Contract provisions, the current edition of the MUTCD, and Authority policy and procedures. The Authority

will review and provide comments to the Contractor within 14 days of receipt of the TCP. No review or comment by the Authority, or any failure to review or comment, shall operate to absolve the contractor of its responsibility to design and implement the plan in accordance with the Contract, or to shift any responsibility to the Authority. If the TCP is determined by the Authority to be operationally ineffective, the Contractor shall submit modifications of the TCP to the Authority for review and shall implement these changes at no additional cost to the Contract. Nothing in this Section shall negate the Contractor's obligations set forth in Section 110 - Indemnification, Bonding, and Insurance. The creation and modification of the TCP will be considered incidental to the related 652 items.

652.3.4 General

Prior to starting any work on any part of the project adjacent to or being used by the traveling public, the Contractor shall install the appropriate traffic control devices in accordance with the plans, specifications and the latest edition of Manual of Uniform Traffic Control Devices, Part VI. The Contractor shall continuously maintain the traffic control devices in their proper position, and they shall be kept clean, legible and in good repair throughout the duration of the work. If notified that the traffic control devices are not in place or not properly maintained, the Contractor may be ordered to immediately suspend work until all deficiencies are corrected.

No equipment or vehicles of the Contractor, their subcontractors, or employees engaged in work on this contract shall be parked or stopped on lanes carrying traffic, or on lanes or shoulders adjacent to lanes carrying traffic, at any time, except as required by ongoing work operations. Contractor equipment or vehicles shall never be used to stop, block, or channelize traffic.

Vehicles parked on the shoulder shall be located so all portions of the vehicle(s) are a minimum of one foot from the traveled way. No operation shall be conducted on or near the traveled lanes or shoulders without first setting up the proper lane closure and traffic control devices. These precautions shall be maintained at all times while this Work is being performed. The Contractor shall keep all paved areas of the highway as clear as possible at all times. No materials shall be stored on any paved area of the highway or within 30 feet of the traveled way (unless protected by concrete barriers and specifically approved by the Resident). Private vehicles owned by Contractor's employees shall be parked close together in a group no closer than 30 feet from the traveled way in pre-approved areas.

Channelization devices shall include Vertical Panel Markers, Barricades, Cones, and Drums shall be in accordance with the MUTCD. These devices shall be installed and maintained at the spacing determined by the MUTCD through the work area.

The Contractor shall maintain existing guardrails and/or barriers until removal is necessary for construction. The Contractor shall use a temporary barrier or appropriate channelizing devices, as approved by the Resident, while the guardrails and/or barriers are absent. Permanent guardrails and barriers shall be installed as soon as possible to minimize risk to the public.

When Contractor operations or shoulder grading leave a continuous 3 inch or less exposed vertical face at the edge of the traveled way, including the shoulder, or when traffic is shifted into the shoulder adjacent to the edge of pavement where an existing 3 inch or less exposed vertical

face creates a safety hazard, channelization devices should be placed 2 feet outside the edge of the pavement at intervals not exceeding 600 feet and, depending on type and location of the exposed vertical face, a 48 inch by 48 inch W8-9 Low Shoulder, or W8-11 Uneven Lane, and/or a W8-17P Shoulder Drop-Off sign should be placed at a maximum spacing of ½ mile. When Contractor operations or shoulder grading leave greater than a 3-inch exposed continuous vertical face at the edge of the traveled way, including the shoulder, or when an existing condition of an exposed vertical face of 3 inches or more is adjacent to active traffic shifted into shoulder, the Contractor shall place shoulder material at a slope not exceeding 3 horizontal to 1 vertical to meet the pavement grade, before the lane is opened to traffic.

Special Detours and temporary structures, if used, shall meet applicable AASHTO standards, including curve radii and grade.

Maine Turnpike Traffic Control Requirements

This Section outlines the minimum requirements that shall be maintained for working on, over, or adjacent to the Maine Turnpike roadway.

General

Two travel lanes in each direction (each direction being 24 feet wide including/excluding shoulder) in the two lane portion of the turnpike, and three travel lanes in each direction (each direction being 36 feet wide including/excluding shoulder) in the three lane portion of the turnpike (Mile 0.0 to mile 44.3) shall be maintained at all times except while performing work in a designated lane, directly over or adjacent to traffic, and during the placement and removal of traffic control devices.

Unless otherwise specified in the contract documents the minimum main line width for a single travel lane shall be 14 ft and minimum ramp widths of 16 ft which must be maintained at all times, from ½ hour before sunrise and ½ hour after sunset as indicated on the Sunrise/Sunset Table at: http://www.sunrisesunset.com/usa/Maine.asp . If the Project town is not listed, the closest town on the list will be used as agreed at the Preconstruction Meeting.

**Shoulder closures, lane closures, and lane shifts meeting the MUTCD guidelines, other than those shown in the plans, must be submitted for approval from the MTA prior to use in the construction operations.**

No lane closures will be allowed during non-working hours, weekends and/or holiday periods unless included in the Contract as long-term traffic control requirement as outlined in Section 652 – Specific Project Maintenance of Traffic Requirements **unless written permission is obtained from the Authority.**

Any special signs, barricades or other devices deemed necessary by the Resident shall be furnished and maintained by the Contractor. Extra care shall be taken so that the traffic flow will not be disturbed. The use of construction signs and warning devices not shown on the Plans or in the MUTCD is prohibited unless approved by the Resident

The Contractor's personnel and equipment shall avoid crossing traffic whenever possible. No Contractor's vehicle may slow down or stop in a traffic lane unless said lane has previously been made safe with signs and barricades as required by the Resident.

No vehicle will move onto the traveled way at such a time or in such a manner so as to cause undue concern or danger to traffic approaching from either direction. The Contractor or his employees are not empowered to stop traffic.

The Contractor shall take necessary care at all times, in all operations and use of his equipment, to protect and facilitate traffic. During periods of idleness, the equipment shall not be left in a way to obstruct the traffic artery or to interfere with traffic.

The Contractor shall furnish approved signs reading "Construction Vehicle - Keep Back" to be used on trucks hauling to the Project. The signs shall be a minimum of 30-inch by 60-inch, Black and Orange, and meet construction sign retro reflectivity requirements

All vehicles used on the Project shall be equipped with amber flashing lights, by means of a single or multiple, flashing LED or strobe lights mounted so as to be visible 360 degrees. **In addition, vehicles operating under direction of the Maine Turnpike Authority may be equipped with auxiliary lights that are green, white or amber or any combination of green, white or amber.** Auxiliary lighting shall have sufficient intensity to be visible at 500 feet in normal daylight and a flash rate between 1Hz and 4Hz. The vehicle flashing system shall be in continuous operation while the vehicle is on any part of the project and positioned or mounted in such a way to not be obstructed by vehicle mounted or other equipment. Dump trucks, **concrete trucks** and utility trucks **at a minimum** shall have a strobe light mounted on each side of the vehicle. **The use of motorcycles is not permitted within a construction site or as a means to arrive at or leave a work zone**.

Where space is available pavement striping for all tapers shall create a minimum buffer of 250 feet to the point where the temporary concrete barrier taper ends and becomes parallel to the travelway. Temporary concrete barrier shall be tapered at a minimum 8:1 unless space is available and then it should be tapered at 15:1 or 100 feet whichever is longest.

**Milling and paving of interchange ramps shall be done between 9:00 p.m. and 5:00 AM, unless otherwise shown on the Maintenance of Traffic Phasing Plans or as directed by the MTA. Only a single ramp at an interchange may be closed at once. Ramp closures will not be permitted the day before or after holidays, on holidays, or on Saturdays or Sundays. The Contractor shall request approval from the Resident/Authority two weeks prior for all ramp closures. Portable changeable message signs shall be used to provide advance notice and warning of the ramp closure. PCMS's shall be operational a minimum of 1 week prior to ramp closure to notify Patrons. The contractor shall coordinate PCMS locations with the Resident and the MTA.**

**Access to, and egress from, the construction area shall be with the direction of travel without crossing traffic. Construction vehicles are prohibited from merging with mainline traffic during the AM and PM peak traffic hours unless approved in writing from the MTA. The contractor shall develop work zone access/egress with acceleration and deacceleration areas and should utilize interchange ramp areas whenever feasible.**

Temporary Mainline Lane Closures

A lane closure may be required whenever personnel will be actively working within four feet of a travel lane.

**Loading/unloading trucks shall not be closer than six feet from an open travel lane.** Temporary lane closures will only be allowed at the times outlined in Special Provision, Section 652, Specific Project Maintenance of Traffic Requirements. These hours may be adjusted based on the traffic volume each day by the Resident.

A lane closure is required when a danger to the traveling public may exist. The following is a partial list of activities requiring lane closures. Lane closures may be required for other activities as well:

- Milling and Paving Operations
- Bridge work
- Drainage Installation and/or Adjustment
- Clear Zone Improvements
- Pavement Markings Layout and Placement

Work directly over traffic within six feet of a travel lane as measured from the painted pavement marking line or traffic control device will require a lane closure. This work includes but is not limited to the following:

1. **Unbolting structural steel**
2. **Removing structural steel**
3. **Erecting structural steel**
4. **Erecting or moving sign panels on bridges or sign structures**
5. **Bolting structural steel**
6. **Loading and unloading trucks**
7. **Light pole removal or installation**
8. **Snow fence installation**

Lane closures shall be removed if work requiring the lane closure is not ongoing unless included in the Contract as a long-term traffic control requirement or approved by the Resident.

During adverse weather condition when the speed limit on the Maine Turnpike has been reduced to 45 MPH, or during fog or when there is less than ½ mile of visibility, **shoulder/lane closures cannot be set up and any currently in place shall be removed. Only work on the turnpike mainline that is behind temporary concrete barrier will be allowed when speed is reduced to 45 MPH or fog/visibility conditions exist.**

Daytime lane closures shall be a maximum of three (3) miles. Only one daytime lane closure will be permitted per direction. Nighttime lane closures may extend through the entire length of the Project.

Temporary single lane closures are allowed upon approval of the Resident. **Lane and/or ramp** closure setup may not begin until the beginning time specified. Closures that are setup early or that remain in place outside of the approved time period shall be subject to a lane rental fee of **$1,000** per five minutes for every five minutes outside of the approved time. The installation of the construction signs will be considered setting up the lane closure. Removal of the last construction sign will be considered removal of the closure. Construction signs shall be installed immediately prior to the start of the closure and shall be promptly removed when no longer required. The installation and removal of a closure, including signs, channelizing devices, and arrow boards shall be a continuous operation. The Authority reserves the right to order the removal of an approved closure.

The Authority desires to minimize the number of daytime lane closures and the number of times that a complete stoppage of traffic is required. The Contractor is encouraged to schedule work so that the interference with the flow of traffic will be minimized. Lane closures will not be allowed until traffic associated with complete stoppages of traffic has cleared. Complete stoppages of traffic or lane closures may not be allowed on a particular day if another complete stoppage of traffic has been previously approved for another project.

The Resident is required to receive approval from the Maine Turnpike Authority for all lane closures. **The Resident is required to submit a request for lane closures by noon on Thursday for any lane closures needed for the following week.** The Contractor shall plan the work accordingly.

Temporary Mainline Shoulder Closures

Shoulder closures are anticipated at locations where Contractor access to the mainline is required.

Shoulder closures with plastic drums shall be removed at the end of the workday. Temporary shoulder closures with plastic drums will not be allowed during periods of inclement weather as determined by the Authority.

The location (limits) of shoulder closures with concrete barrier are shown on the Plans. The barrier must be placed prior to the start of the work requiring concrete barrier and shall remain in place until the work activity is complete.

Equipment Moves

The complete stoppage of traffic for an equipment move (including delivery of materials to the median) will be considered for approval if the action cannot reasonably be completed with the erection of a lane closure. Contractor shall be responsible for the installation of Signs CS-3, “Expect Stopped Traffic” and Signs W3-4 “Be Prepared to Stop”, in accordance with the Single Lane Closure Detail immediately prior to the equipment move. **Signs will be required on any adjacent ramps within proximity to the stoppage**. These signs shall be covered when not applicable.

State Police will be used to stop traffic. Cost for State Police will be the responsibility of the Authority. The times requested for trooper assisted equipment moves by on-duty troopers

cannot be guaranteed. The MTA will not be held responsible for any delays or costs associated with the delay, postponement or cancellation of an on-duty trooper assisted equipment move.

The maximum time for which traffic may be stopped and held for an equipment move across mainline or ramp at any single time shall be five (5) minutes. The duration shall be measured as the time betweenthe time the last car passes the Resident until the time the Resident determines that all travel lanes are clear. The traffic shall only be stopped for the minimum period of time required to complete the approved activity. The Contractor shall reimburse the Authority at a rate of $500 per minute for each minute in excess of the five-minute allowance.

Unapproved movement of equipment or materials across the travel lanes shall be considered a violation of the Maintenance of Traffic Requirements and is subject to a minimum fine of $500 per occurrence with an additional $500 per minute thereafter.

Request for Complete Stoppage of Traffic

A request for a complete stoppage of traffic must be submitted to the Resident for approval. The Resident is required to receive approval from the Maine Turnpike Authority for all stoppages. The request shall be submitted to the Authority by the Resident at least five (5) working days prior to the day of the requested stoppage of traffic and two (2) days for a stoppage less than five minutes. All requests must be received by 12:00 p.m. noon to be considered as received on that day. Requests received after 12:00 p.m. shall be considered as received the following day. The Contractor shall plan the work accordingly.

During the erection or removal of overhead structures or signs traffic shall be stopped and may be held for periods of up to 25 minutes during these operations. Before the roadway is reopened, all materials shall be secured so they will not endanger traffic passing underneath. The Contractor will reimburse the Authority at the rate of $2,500.00 per five-minute period for each roadway not reopened (northbound and southbound), in excess of the 25-minute limit. Total penalty shall be deducted from the next pay estimate.

Blasting of Ledge, The maximum time for which traffic may be stopped at any single time shall be six (6) minutes. This duration shall be measured as the time between the time that the last car passes the Resident, until the time the Resident determines that all travel lanes are cleared of blast debris. The Contractor shall reduce the size of the blast, change the design and method of the blast, use more mats, or otherwise alter the blasting so that the traffic is not stopped for more than six minutes. If, due to the throw of rock onto the highway or other blasting related activities, traffic is stopped for more than six minutes, the Contractor shall pay a penalty of $1,000.00 per minute for every minute traffic is stopped in excess of the six-minute limit. The penalty shall be measured separately on the northbound and southbound roadway (or eastbound and westbound roadway). Total penalties will be deducted from the next pay estimate. Whenever the volume of traffic is excessive such that a six-minute interruption would cause objectionable congestion, in the opinion of the Authority, the hours during which blasting may occur may be further restricted. A detailed blasting plan shall be submitted as required in Supplemental Specific or Special Provision Sections 105 or 107.

652.3.5 Installation of Traffic Control Devices

All traffic control devices shall be in conformance with NCHRP 350 requirements and MASH 16 requirements if manufactured after December 31, 2019 and installed as per manufactures recommendations.

Portable signs shall be erected on temporary sign supports approved crashworthy devices so that the bottom of the sign is either 1) 12 inches or 2) greater than 5 feet above the traveled way. The bottom of all regulatory signs and ramp exit signs shall be a minimum of 5 feet above the traveled way. The contractor is responsible for maintaining the temporary sign structures so that the sign face remains in a vertical position. Temporary signs supports shall not be used for signs that will remain in place at a single location for more than one month.

No signs on easels shall be placed on 4 foot shoulders with guardrail, signs required at these location shall be placed on taller easels on the median side of the guardrail.

Post-mounted signs shall be erected so the bottom of the sign is no less than 5 feet above the traveled way, and 7 feet above the traveled way in business, commercial, and residential areas. Post-mounted signs must be erected so that the sign face is in a true vertical position. All signs shall be placed so that they are not obstructed in any manner and immediately modified to ensure proper visibility if obstructed.

The bottom of mainline and ramp traffic control signs intending to remain longer than 3 days, except as provided in 2009 MUTCD Section 6F.03 paragraph 12, shall be mounted 5 feet or greater above the edge of pavement on posts or portable sign supports.

The Resident will verify the exact locations of the construction signs in the field.

Construction signs behind guardrail shall be mounted high enough to be visible to traffic.

Vertical panel markers shall be mounted with the top at least 4 feet above the traveled way.

**Drums placed along the Turnpike mainline shall have a minimum of one drum weight. Drums that will remain in the same location for more than three days shall have double drum weights. (i.e. a minimum of 40 lbs of drum tire rings).** Drums shall not be weighted on the top. Drain holes shall be provided to prevent water from accumulating in the drums During winter periods, drums shall be placed on the grass shoulder or removed from the roadway so winter maintenance operations will not be impacted. This requires the placement of drums behind the median guardrail. Drums shall not be placed on snowbanks.

The Contractor shall operate and maintain the flashing arrow board unit and for dependable service during the life of the contract. The units shall remain in continuous night and day service at locations designated until the Resident designates a new location or discontinuance of service.

The Contractor shall maintain the devices in proper position and clean them as necessary. Maintenance shall include the covering and uncovering of all signs when no longer applicable (even if for a very short duration). The sign shall be considered adequately covered when no part of the sign face is visible either around or through the covering.

The Contractor shall replace damaged traffic control devices with devices of acceptable quality, as directed by the Resident.

The Contractor is required to cover all existing signs, including regulatory and warning signs, within the Work zone which may conflict with the proposed construction signs. The Contractor is also required to cover all permanent construction signs when they conflict with a daily traffic control setup. The method of covering existing signs must be approved by the Resident. The use of adhesives on the sign face is prohibited.

Work Zone Speed Limits

Work Zone Speed (Fines Doubled) is a regulatory speed limit that indicates themaximum legal speed through a work zone which is lower than the normal posted speed. The speed limit shall be displayed by black on white speed limit signs in conjunction with a black on orange "Work Zone" plate. Speed limit signs shall be installed at each mile within the work zone. Any existing regulatory speed limit signs within the reduced speed zone shall be covered once the reduced speed signs have been erected.

Two orange fluorescent flags shall be attached to all speed limit signs that are uncovered for a period of time exceeding one week. This work shall be incidental. Signs that are covered and uncovered on a regular basis are not required to have the supplemental flags.

The reduced speed limit signs shall be used when workers are adjacent to traffic, when travel lane(s) are closed, when indicated on Maintenance of Traffic Control Plans provided or other times as approved by the Resident:

The signs shall be covered or removed when not applicable. The covering and uncovering of signs shall be included for payment under Maintenance of Traffic. Signs relating to reduced speed shall be installed in accordance with the details. The Contractor shall note that all signs including those behind concrete barrier or guardrail are required to be clearly visible to all drivers at all times.

Lane Closure Installation and Removal Procedure

The Contractor will follow the following procedures when closing any travel lanes on the turnpike roadways:

1. The sign package shall be erected starting with the first sign and proceeding to the start of the taper. The sign crew shall erect signs with the vehicle within the outside shoulder.

2. Position the arrow board with the proper arrow at the beginning of the taper; and,

3. When arrow board is in place, continue with the drums/cones to secure the work area.

To dismantle the lane closure, start with last drums/cone placed and work in reverse order until all the drums are removed. The arrow board which was installed first shall be the final traffic control device removed, excluding the sign package. The remaining sign package shall be picked-

up starting with the first sign placed and continuing in the direction of traffic and with the vehicle in the outside shoulder.

Trucking Plan

The Contractor shall submit a trucking plan to the Resident within 10 working days of the award of the Contract. The trucking plan shall consist of at least the following:

- Date of anticipated start of work per each location.
- Haul routes from plant/pit to work area and return.
- Haul routes from work area to disposal area and return.
- Entering / exiting the work area.
- Vehicle safety equipment and Vehicle inspection.
- Personal safety equipment.
- Communications equipment and plan.

The trucking plan will not be paid for separately but shall be incidental to the Contract.

652.3.6 Traffic Control

The existing travel way width shall be maintained to the maximum extent practical.

Vertical panel markers, drums, cones, or striping shall be used to clearly delineate the roadway through the construction area. Two-way traffic operation shall be provided at all times that the Contractor is not working on the project. One- way traffic shall be controlled through work areas by flaggers, utilizing radios, field telephones, or other means of direct communication.

The traffic control devices shall be moved or removed as the work progresses to assure compatibility between the uses of the traffic control devices and the traffic flow.

Pavement markings shall be altered as required to conform to the existing traffic flow pattern. Repainting of pavement marking lines, if required to maintain the effectiveness of the line, shall be considered **incidental to the** maintenance of traffic control devices, no separate payment will be made. Inappropriate pavement markings shall be removed whenever traffic is rerouted, and temporary construction pavement markings shall be placed. Removal of non-applicable markings and **initial** placement of temporary construction pavement markings will be paid for under the appropriate Contract items. Traffic changes shall not be made unless there is sufficient time, equipment, materials, and personnel available to complete the change properly before the end of the workday. This provision will not be required when traffic is rerouted for brief periods and the route can be clearly defined by channelizing devices, or flaggers, or both.

All vehicles used during the installation and removal of traffic control devices, including lane closures, shall be equipped with a vehicle-mounted lighted arrow board **or high intensity**

**LED full width light bar** acceptable to the Resident. The arrow board **or full width light bar** shall be capable of displaying a left arrow, right arrow, double arrow, and light bar **patterns**.

652.4 Flaggers

The Contractor shall furnish flaggers as required by contract documents or as otherwise specified by the Resident. **Flaggers shall not stop traffic on Turnpike mainline or interchange ramps. Only State Police are allowed to stop traffic on mainline or interchange ramps.**

All flaggers must have successfully completed a flagger test approved by the Maine Department of Transportation and administered by a Maine Department of Transportation approved Flagger-Certifier. All flaggers must carry an official certification card with them at all times while flagging.

For daytime conditions, flaggers shall wear a top (vest, shirt or jacket) that is orange, yellow, yellow-green, or fluorescent versions of these colors meeting ANSI 107-2004, Class 3, along with a hat with 360 ˚ retro-reflectivity.

For nighttime conditions, flaggers shall wear all Class 3 apparel, meeting ANSI 107-2004, including a Class 3 top (vest, shirt or jacket) and a Class E bottom (pants or coveralls), shall be worn along with a hardhat with 360 ˚ retro-reflectivity and shall be visible at a minimum distance of 1000 ft. Flagger stations must be illuminated in nighttime conditions to assure visibility and will be specifically addressed in detail in the Contractor's TCP.

Flagger stations shall be located far enough in advance of the workspace so that approaching road users will have sufficient distance to stop at the intended stopping point. While flagging, the flagger should stand either on the shoulder adjacent to the traffic being controlled, or in the closed lane. At a spot obstruction with adequate sight distance, the flagger may stand on the shoulder opposite the closed sections to operate effectively. Under no circumstances shall the flagger stand in the lane being used by moving traffic or have their back to oncoming traffic. The flagger should be clearly visible to approaching traffic at all times and should have a clear escape route.

When conditions do not allow for proper approach sight distance of a flagger or storage space for waiting vehicles, additional flaggers shall be used at the rear of the backlogged traffic or at a point where approaching vehicles have adequate stopping sight distance to the rear of the backlogged traffic. All flagger stations shall be signed, even when in close proximity. The signs shall be removed or covered when flagger operations are not in place, even if it is for a very short duration.

Flaggers shall be provided as a minimum, a 10-minute break, every 2 hours and a 30 minute or longer lunch period away from the workstation. Flaggers may only receive 1 unpaid break per day; all other breaks must be paid. Sufficient certified flaggers shall be available onsite to provide for continuous flagging operations during break periods. If the flaggers are receiving the appropriate breaks, breaker flagger(s) shall be paid starting 2 hours after the work begins and ending 2 hours before the work ends. A maximum of 1 breaker per 6 flaggers will be paid. (1 breaker flagger for 2 to 6 flaggers, 2 breaker flaggers for 7 to 12 flaggers, etc.). If a flagger station

is manned for 10 hours or more, then ½ hour for lunch will be deducted from billable breaker flagger hours.

652.41 Traffic Officers

Local road traffic officers, if required, shall be uniformed police officers. State Police officers and vehicles shall be used to warn and stop traffic on the Maine Turnpike. All State Police shall be scheduled through the Maine Turnpike Authority. The Authority will make payment for the State Police officers and vehicles directly to the State Police.

The Contractor will not be entitled to additional compensation if scheduled Work is not completed due to the unavailability of State Police.

652.5.1 Rumble Strip Crossing

When lane shifts or lane closures require traffic to cross a permanent longitudinal rumble strip for 7 calendar days or less, the Contractor shall install warning signs that read "RUMBLE STRIP CROSSING" with a supplemental Motorcycle Plaque, (W8-15P).

When lane shifts or lane closures require traffic to cross a permanent longitudinal rumble strip for more than 7 calendar days, the Contractor shall pave in the rumble strips in the area that traffic will cross, unless otherwise directed by the Resident. Rumble strips shall be replaced prior to the end of the project, when it is no longer necessary to cross them.

652.6.1 Daylight Work Times

Unless otherwise described in the Contract, the Contractor is allowed to commence work and end work daily according to the Sunrise/Sunset Table at: http://www.sunrisesunset.com/usa/Maine.asp . If the Project town is not listed, the closest town on the list will be used as agreed at the Preconstruction Meeting. Any work conducted before sunrise or after sunset will be considered Night Work.

652.6.2 Night work

When Night Work occurs (either scheduled or unscheduled), the Contractor shall provide and maintain lighting on all equipment, at all workstations, and all flagger stations.

The lighting facilities shall be capable of providing light of sufficient intensity to permit good workmanship, safety, and proper inspection at all times. The lighting shall be cut off and arranged on stanchions at a height that will provide perimeter lighting for each piece of equipment and will not interfere with traffic, including commercial vehicles, approaching the work site from either direction.

The Contractor shall have available portable floodlights for special areas.

The Contractor shall utilize padding, shielding or other insulation of mechanical and electrical equipment, if necessary, to minimize noise, and shall provide sufficient fuel, spare lamps, generators, etc. to maintain lighting of the work site.

The Contractor shall submit a lighting plan prior to any night work for review showing the type and location of lights to be used for night work. The Resident may require modifications be made to the lighting set up in actual field conditions.

Prior to beginning any Night Work, the Contractor shall furnish a light meter for the Residents use that is capable of measuring the range of light levels from 5 to 20 foot-candles.

Horizontal illumination, for activities on the ground, shall be measured with the photometer parallel to the road surface. For purposes of roadway lighting, the photometer is placed on the pavement. Vertical illumination, for overhead activities, shall be measured with the photometer perpendicular to the road surface. Measurements shall be taken at the height and location of the overhead activity.

Night Work lighting requirements:

Mobile Operations: For mobile-type operations, each piece of equipment (paver, roller, milling machine, etc.) will carry indirect (i.e. balloon type) lights capable of producing at least 10 foot- candles of lighting around the work area of the equipment.

Fixed Operations: For fixed-type operations (flaggers, curb, bridge, pipes, etc.), direct (i.e. tower) lighting will be utilized capable of illuminating the work area with at least 10 foot- candles of light.

Hybrid Operations: For hybrid-type operations (guardrail, sweeping, In-slope excavation, etc.), either direct or indirect lighting may be utilized. The chosen lights must be capable of producing at least 10 foot-candles of light around the work area of the equipment

Inspection Operations: Areas required to be inspected by the Authority will require a minimum of 5 foot-candles of lighting. This may be accomplished through direct or indirect means.

The Contractor shall apply 2- inch wide retro-reflective tape, with alternating red and white segments, to outline the front back and sides of construction vehicles and equipment, to define their shape and size to the extent practicable. Pickup trucks and personal vehicles are exempt from this requirement.

The Resident or any other representative of the Authority reserves the right to suspend the work at any time and request a meeting to discuss violations and remedies. The Authority shall not be held responsible for any delay in the work due to any suspension under this item.

Failure to follow the approved Lighting Plan will result in a Traffic Control violation.

Payment for lighting, vehicle mounted signs and other costs accrued because of night work will not be made directly but will be considered incidental to the related contract items.

652.6.3 Traffic Coordinator and Personnel

The Contractor shall submit to the Resident for approval a list of traffic control personnel assigned to the Project including qualifications, certifications and experience.

The Traffic Coordinator duties shall include, but are not necessarily limited to:

a. Developing, in conjunction with the Resident and Project superintendent, a traffic control program for the days' work activities which will facilitate traffic in a safeand efficient manner.

b. Ensure that all traffic control implements (signs, arrow boards, barrels, etc.) are on-site so the traffic program can be implemented effectively.

c. Ensure a safe and effective setup or take-down of all signing implements to least impact the traveling motorist; and,

d. Working knowledge of construction signing/traffic control requirements in conformance with the latest issued Manual on Uniform Traffic Control Devices.

e. The Contractor shall supplement the traffic control plan with a daily plan, which includes schedules for utilizing traffic coordinators and flaggers. This plan shall be submitted daily and agreed upon cooperatively with the Resident.

652.7 Method of Measurement

Signs, signs supplied by the Authority, and panel markers will not be measured separately for payment but shall be incidental to the associated Maintenance of Traffic Control Devices item. Flashing arrow boards, portable-changeable message signs, and flashing and steady burn lights, will not be measured separately for payment but shall be incidental to the associated Maintenance of Traffic Control Devices item.. Barricades and cones will not be measured separately for payment but shall be incidental to the associated Maintenance of Traffic Control Devices item. Drums will not be measured separately for payment but shall be incidental to the associated Maintenance of Traffic Control Devices item, as indicated on the plans and specifications. No additional payment will be made for devices that require replacement due to poor condition or inadequate retroreflectivity.

Flaggers or traffic officers used during the Contract, for the convenience of the Contractor, will not be measured separately for payment, but shall be incidental to the various pay items. **This includes use of Flaggers for the delivery of materials and equipment to the project or other Flagger use that is for the Contractor's convenience, as determined by the Resident Engineer. If flaggers are required to maintain traffic and there is not a pay item in the contractor for flaggers, then flaggers shall be incidental to the other Section 652 contract items and no separate payment shall be made.**

The accepted quantity of traffic officer and flagger time will not be measured separately for payment but shall be incidental to the associated Maintenance of Traffic Control Devices item.

The Authority will make payment for the State Police officers and vehicles directly to the State Police when utilized for mainline traffic control activities. State Police escorts, if required to move oversize material or equipment loads to the jobsite, will not be paid separately, but shall be incidental to the various pay items.

Maintenance of traffic control devices, including Automated trailer mounted speed limit signs required for the project will not be measured separately for payment but shall be incidental to the associated Maintenance of Traffic Control Devices item, for all authorized and installed traffic control devices. Traffic control devices will only be measured for payment the first time used. Subsequent uses shall be incidental to the associated Maintenance of Traffic Control Devices item.

The vehicle mounted arrow board, mounted on trucks used for installation and removal of lane closures, will not be measured separately for payment, but shall be incidental to the associated Maintenance of Traffic Control Devices item.

The traffic coordinator(s) will not be measured separately for payment but shall be incidental to the associated Maintenance of Traffic Control Devices item.

Portable light towers, lighting on equipment and lighting plan will not be measured separately for payment but shall be incidental to the associated Maintenance of Traffic Control Devices item.

Truck mounted attenuator will not be measured separately for payment but shall be incidental to the associated Maintenance of Traffic Control Devices item.

Sequential Flashing Warning Lights will not be measured separately for payment but shall be incidental to the associated Maintenance of Traffic Control Devices item. Payment shall include all materials and labor to install, maintain and remove all Sequential Flashing Warning Lights.

Automated Trailer Mounted Speed Limit Sign shall be incidental to the Maintenance of Traffic Control device item. Payment shall include the Trailer, Radar Speed Limit Sign, flashing beacon amber lights, regulatory speed limit sign, fuel, necessary maintenance, and all checking of Radar Speed Limit Signs by manufacturer and all project moves including the transporting and delivery of the unit.

The accepted quantity of temporary portable rumble strips will not be measured separately for payment but shall be incidental to the associated Maintenance of Traffic Control Devices item. A unit shall consist of 1 group of 3 full-lane width of rumble strips. As shown in the plans, a maximum of 3 units may be used at each lane closure. A unit shall be measured for each group of rumble strips, each time they are used for a lane closure.

652.8 Basis of Payment

The accepted quantity of signs, signs supplied by the Authority, and panel markers will not be paid for separately but as part of lump sum payment under Item 652.361 Maintenance of Traffic Control Devices. Such payment will be full compensation for furnishing (or retrieving from the Authority) and installing all signs, sign supports, and all incidentals necessary to complete the installation of the signs.

The accepted quantity of flashing arrow boards, barricades, battery operated flashing and steady burn lights, and cones will not be paid for separately but as part of lump sum payment

under Item 652.361 Maintenance of Traffic Control Devices. Such payment shall be full compensation for all incidentals necessary to install and maintain the respective devices.

The Sequential Flashing Warning Lights will not be paid for separately but as part of lump sum payment under Item 652.361 Maintenance of Traffic Control Devices. This price shall include all costs associated with furnishing, installing, operating, maintaining, relocating, and removing the Sequential Flashing Warning Lights.

The Truck Mounted Attenuator(s) will not be paid for separately but as part of lump sum payment under Item 652.361 Maintenance of Traffic Control Devices. This price shall include all costs associated with the use of the vehicle. Payment shall include operator, fuel, truck, maintenance, flashing lights, arrow board and all other incidentals necessary to operate the vehicle.

Failure by the contractor to reinstall cones, barrels, signs, covered/uncovered signs, and similar traffic control devices within an hour of them being displaced, moved, knocked over, un-covered and etc. will result in a $150 fine per traffic control device if the issues is not resolved within 1 hour of notification by the resident. An additional $150 will be assessed for each additional hour that the device has not been corrected. If the traffic control device is critical to the maintenance of traffic creating an actual or potential safety issue with traffic and is not corrected immediately then it will result in a violation letter as described below.

Failure by the contractor to follow the Contracts 652 Supplemental Specifications, Special Provisions and Standard Specification and/or the Manual on Uniform Traffic Control Devices (MUTCD) and/or the Contractors own Traffic Control Plan, or failure to correct a violation, will result in a violation letter and result in a reduction in payment as shown in the schedule below. The Resident or any other representative of the Authority reserves the right to suspend the work at any time and request a meeting to discuss violations and remedies. The Authority shall not be held responsible for any delay in the work due to any suspension under this item. Any reduction in payment under this Special Provision will be in addition to forfeiting payment of maintenance of traffic control devices for that day.

| Amount of Penalty Damages per Violation | | |
|---|---|---|
| 1st | 2nd | 3rd & Subsequent |
| $500 | $1,000 | $2,500 |

652.8.1 Maintenance of Traffic Control Devices

Maintenance of Traffic Control Devices will be paid at the contract unit price per calendar day or lump sum price, as indicated in the plans and specifications. Such payment will be full compensation for all days that the Contractor maintains traffic as specified herein, and for moving devices as many times as necessary; for replacing devices damaged, lost, or stolen; and for cleaning, maintaining, and removing all devices used for traffic control, including replacing temporary pavement marking lines.

The contract price for Maintenance of Traffic Control Devices shall be full compensation for all days for such maintenance, encompassing all areas of the contract, regardless of whether or not the work areas or projects are geographically separated.

When payment for this item is lump sum, payment will be made in equal biweekly installments based on the anticipated duration of the Project. Project duration is calculated using the start date noted in the original schedule submitted by the Contractor and the Substantial Completion Date in the Contract.

652.8.2 Other Items

The accepted quantities of flagger hours will not be paid for separately but as part of lump sum payment under Item 652.361 Maintenance of Traffic Control Devices. The contract unit price shall be full compensation for hiring, transporting, equipping, supervising, and the payment of flaggers and all overhead and incidentals necessary to complete the work.

There will be no payment made under any 652 pay items after the expiration of the adjusted total contract time.

The accepted quantities of traffic officer hours will not be paid for separately but as part of lump sum payment under Item 652.361 Maintenance of Traffic Control Devices. This price shall be full compensation for supplying uniformed officers with police cruisers, and all incidentals necessary to complete the work, including transportation, equipment, and supervision.

Payment for temporary pavement marking lines and pavement marking removal will be made under the respective pay item in Section 627 - Pavement Markings.

Payment for temporary traffic signals will be made under Section 643 - Traffic Signals.

The accepted quantity of Portable Changeable Message Signs are not paid for separately but as part of lump sum payment under Item 652.361 Maintenance of Traffic Control Devices. This price shall be full compensation for furnishing, relocating, maintaining and removing the PCMS. The price also includes all costs associated with setting-up and paying for a data cellular account, technical support, training and any costs associated with the GPS location device.

Progress payment of each PCMS will be made in equal biweekly installments based on the anticipated duration of the Project. Project duration is calculated using the start date noted in the original schedule submitted by the Contractor and the Substantial Completion Date in the Contract

For a PCMS that fails to operate when required, the Contractor will be given 24-hours to repair or replace the PCMS. For periods longer than 24-hours, payment will be reduced based on the pro-rated time that the PCMS is out of service.

Drums will not be paid for separately but as part of lump sum payment under Item 652.361 Maintenance of Traffic Control Devices. Such payment shall be full compensation for all drums as shown on the Plans or required to complete the work.

The accepted quantity of temporary portable rumble strips will not be paid for separately but as part of lump sum payment under Item 652.361 Maintenance of Traffic Control Devices, which shall include the transport device. Payment is full compensation for providing, relocating, maintaining or replacing, and removing temporary portable rumble strips. If the pay item is not included in the contract quantities, then the Authority does not anticipate the use of this item

on the contract. If contractor wishes to utilize temporary portable rumble strips and the item is not in the contract, then the contractor may propose use of them to the Authority for consideration.

Payment will be made under:

| | | |
|---|---|---|
| 652.361 | Maintenance of Traffic Control Devices | Lump Sum |

# SPECIAL PROVISION

## SECTION 652

## MAINTENANCE OF TRAFFIC

(Specific Project Maintenance of Traffic Requirements)

This Specification describes the specific project maintenance of traffic requirements for this Project.

The following minimum traffic requirements shall be maintained. These requirements may be adjusted based on the traffic volume when authorized by the Authority.

### Local Road Traffic Control Requirements

Flagger-controlled temporary lane closures may only be used between 9:00 a.m. and 4:00 p.m.

### Maine Turnpike Traffic Control Requirements

This Section outlines the minimum requirements that shall be maintained for work on, over, or adjacent to the Maine Turnpike roadway.

a) Traffic Counts will be conducted by the MTA Resident to adjust the start and end times of allowable closures to provide the Contractor with maximum duration work windows.

b) Weekend work requires approval from the Authority.

c) Work zones that span multiple zone shall have the most restrictive times govern.

d) Temporary Shoulder Closures are allowed at all times.

e) Equipment Moves are allowed during low traffic periods as approved by the Authority.

f) Operations for the travel lane closures are allowed as outlined in the following tables. Turnpike Lane Closures shall be removed if construction is not ongoing. Unattended lane closures are not allowed.

## Cider Hill Road VMS OHSS (MM 6.20 NB)

| Mainline MM 3 - 7 Northbound (3 Lane Section) | | |
|---|---|---|
| | **Double Lane Closures (1 Lane Open)** | **Single Lane Closures (2 Lanes Open)** |
| **January 1, 2027 to May 8, 2027** | | |
| *Sunday PM through Monday AM* | 8 PM to 7 AM | Anytime |
| *Monday PM through Friday AM* | 8 PM to 7 AM | Anytime (Fri 1 PM) |
| **May 9, 2027 to June 26, 2027** | | |
| *Sunday PM through Monday AM* | 9 PM to 6 AM | 6 PM to 11 AM |
| *Monday PM through Friday AM* | 9 PM to 6 AM | 6 PM to 11 AM (Fri 10 AM) |
| **June 27, 2027 to September 4, 2027** | | |
| *Sunday PM through Monday AM* | 9 PM to 6 AM | 6 PM to 10 AM |
| *Monday PM through Friday AM* | 10 PM to 6 AM | 6 PM to 10 AM (Fri 9 AM) |
| **September 5, 2027 to December 31, 2027** | | |
| *Sunday PM through Monday AM* | 8 PM to 7 AM | 6 PM to 2 PM |
| *Monday PM through Friday AM* | 9 PM to 7 AM | 5 PM to 2 PM (Fri 11 AM) |

| Mainline MM 3 - 7 Southbound (3 Lane Section) | | |
|---|---|---|
| | **Double Lane Closures (1 Lane Open)** | **Single Lane Closures (2 Lanes Open)** |
| **January 1, 2027 to May 8, 2027** | | |
| *Sunday PM through Monday AM* | 7 PM to 6 AM | Anytime |
| *Monday PM through Friday AM* | 7 PM to 6 AM (Fri 7 AM) | Anytime |
| **May 9, 2027 to June 26, 2027** | | |
| *Sunday PM through Monday AM* | 9 PM to 6 AM | 7 PM to Anytime |
| *Monday PM through Friday AM* | 7 PM to 6 AM (Fri 7 AM) | Anytime |
| **June 27, 2027 to September 4, 2027** | | |
| *Sunday PM through Monday AM* | 10 PM to 5 AM | 8 PM to 9 AM |
| *Monday PM through Friday AM* | 9 PM to 5 AM (Fri 6 AM) | 6 PM to 9 AM |
| **September 5, 2027 to December 31, 2027** | | |
| *Sunday PM through Monday AM* | 8 PM to 6 AM | Anytime |
| *Monday PM through Friday AM* | 7 PM to 6 AM (Fri 7 AM) | Anytime |

## Limerick Road VMS OHSS (MM 28.3 SB)

| Mainline MM 25 - 32 Northbound (3 Lane Section) | | |
|---|---|---|
| | **Double Lane Closures (1 Lane Open)** | **Single Lane Closures (2 Lanes Open)** |
| **January 1, 2027 to April 24, 2027** | | |
| *Sunday PM through Monday AM* | 7 PM to 6 AM | Anytime |
| *Monday PM through Friday AM* | 7 PM to 6 AM (Fri 7 AM) | Anytime |
| **April 25, 2027 to June 19, 2027** | | |
| *Sunday PM through Monday AM* | 8 PM to 6 AM | Anytime |
| *Monday PM through Friday AM* | 8 PM to 6 AM | Anytime (Fri 1 PM) |
| **June 20, 2027 to September 4, 2027** | | |
| *Sunday PM through Monday AM* | 8 PM to 6 AM | 6 PM to 11 AM |
| *Monday PM through Friday AM* | 9 PM to 6 AM | 6 PM to 11 AM (Fri 10 AM) |
| **September 5, 2027 to December 31, 2027** | | |
| *Sunday PM through Monday AM* | 8 PM to 6 AM | Anytime |
| *Monday PM through Friday AM* | 8 PM to 6 AM | Anytime (Fri 1 PM) |

| Mainline MM 25 - 32 Southbound (3 Lane Section) | | |
|---|---|---|
| | **Double Lane Closures (1 Lane Open)** | **Single Lane Closures (2 Lanes Open)** |
| **January 1, 2027 to April 24, 2027** | | |
| *Sunday PM through Monday AM* | 6 PM to 7 AM | Anytime |
| *Monday PM through Friday AM* | 7 PM to 6 AM (Fri 8 AM) | Anytime |
| **April 25, 2027 to June 19, 2027** | | |
| *Sunday PM through Monday AM* | 8 PM to 6 AM | Anytime |
| *Monday PM through Friday AM* | 7 PM to 6 AM (Fri 7 AM) | Anytime |
| **June 20, 2027 to September 4, 2027** | | |
| *Sunday PM through Monday AM* | 9 PM to 6 AM | 7 PM to 10 AM |
| *Monday PM through Friday AM* | 8 PM to 6 AM (Fri 7 AM) | 8 PM to 10 AM |
| **September 5, 2027 to December 31, 2027** | | |
| *Sunday PM through Monday AM* | 8 PM to 6 AM | Anytime |
| *Monday PM through Friday AM* | 7 PM to 6 AM (Fri 7 AM) | Anytime |

## Holmes Road VMS OHSS (MM 43.0 NB)

| Mainline MM 42 - 44 Northbound (3 Lane Section) | | |
|---|---|---|
| | **Double Lane Closures (1 Lane Open)** | **Single Lane Closures (2 Lanes Open)** |
| **January 1, 2027 to April 3, 2027** | | |
| *Sunday PM through Monday AM* | 7 PM to 6 AM | 6 PM to 7 AM |
| *Monday PM through Friday AM* | 7 PM to 6 AM | 5 PM to 7 AM |
| *Monday through Friday* | ---- | 9 AM to 2 PM |
| **April 4, 2027 to May 22, 2027** | | |
| *Sunday PM through Friday AM* | 9 PM to 6 AM | 6 PM to 7 AM |
| *Monday through Friday* | ---- | 9 AM to 2 PM |
| **May 23, 2027 to October 9, 2027** | | |
| *Sunday PM through Monday AM* | 9 PM to 6 AM | 6 PM to 7 AM |
| *Monday PM through Friday AM* | 10 PM to 6 AM | 6 PM to 7 AM |
| **October 10, 2027 to December 31, 2027** | | |
| *Sunday PM through Monday AM* | 8 PM to 6 AM | 6 PM to 7 AM |
| *Monday PM through Friday AM* | 8 PM to 6 AM | 6 PM to 7 AM |
| *Monday through Friday* | ---- | 9 AM to 2 PM |

| Mainline MM 42 - 44 Southbound (3 Lane Section) | | |
|---|---|---|
| | **Double Lane Closures (1 Lane Open)** | **Single Lane Closures (2 Lanes Open)** |
| **January 1, 2027 to April 3, 2027** | | |
| *Sunday PM through Friday AM* | 8 PM to 6 AM | 6 PM to 2 PM (Fri 12 PM) |
| **April 4, 2027 to May 22, 2027** | | |
| *Sunday PM through Friday AM* | 9 PM to 6 AM | 6 PM to 7 AM (Fri 8 AM) |
| **May 23, 2027 to October 9, 2027** | | |
| *Sunday PM through Monday AM* | 10 PM to 6 AM | 8 PM to 7 AM |
| *Monday PM through Friday AM* | 10 PM to 6 AM | 7 PM to 7 AM (Fri 8 AM) |
| **October 10, 2027 to December 31, 2027** | | |
| *Sunday PM through Monday AM* | 8 PM to 6 AM | 6 PM to 1 PM |
| *Monday PM through Friday AM* | 9 PM to 6 AM | 6 PM to 1 PM (Fri 10 AM) |

## Mountain Road VMS OHSS (MM 53.4 SB)

| Mainline MM 53-63 Northbound (2 Lane Section) | |
|---|---|
| | **Single Lane Closure (1 Lane Open)** |
| **Before May 16, 2027** | |
| *Sunday PM through Friday PM* | 6 PM to 2 PM (Fri 12 PM) |
| **May 16, 2027 to August 14, 2027** | |
| *Sunday PM through Monday AM* | 6 PM to 11 AM |
| *Monday PM through Friday AM* | 7 PM to 11 AM (Fri 9 AM) |
| **August 15, 2027 to December 31, 2027** | |
| *Sunday PM through Monday PM* | 6 PM to 1 PM |
| *Monday PM through Friday AM* | 7 PM to 1 PM (Fri 10 AM) |

| Mainline MM 53-63 Southbound (2 Lane Section) | |
|---|---|
| | **Single Lane Closure (1 Lane Open)** |
| **Before May 16, 2027** | |
| *Sunday PM through Monday AM* | 6 PM to 6 AM |
| *Monday AM through Friday AM* | 10 AM to 6 AM |
| **May 16, 2027 to August 14, 2027** | |
| *Sunday PM through Friday AM* | 6 PM to 6 AM |
| **August 15, 2027 to December 31, 2027** | |
| *Sunday PM through Monday AM* | 6 PM to 6 AM |
| *Monday PM through Friday AM* | 5 PM to 6 AM |

# SPECIAL PROVISION

## SECTION 655

## ELECTRICAL

(AWG Wire)

Description

This task shall include the providing and installation of the AWG wire, as described herein for power wiring, for grounding wires (where applicable) and other locations called for in the Plans and Specifications. All wire installed in conduit must be burial grade, suitable for wet locations.

Except as otherwise required, provide wire and connectors of manufacturer's standard materials, as required by published product information; designed and constructed as recommended by the manufacturer, and as required for the installation.

Wire:

Provide factory-fabricated wire of the size, rating, material and type as required for each service. Where not indicated, provide proper selection as determined by Installer to comply with installation requirements and with NEC standards. Select from only the following types, materials, conductor configurations, insulations, and coverings for 120/240 Volt circuits:

UL Type: THWN. (Sizes #16 AWG wire up to #12 AWG wire)

UL Type: XHHW-2. (Sizes #10 AWG wire up to #2 AWG wire)

UL Type: XHHW-2. (Size 500 MCM)

Material: Copper.

Concentric-lay-stranded (standard flexibility) (AWG wire 16 and larger).

INSTALLATION

Install electrical wire and connectors as required, in accordance with the manufacturer's written instructions, the applicable requirements of NEC and the National Electrical Contractors Association's "Standard of Installation", and in accordance with recognized industry practices to ensure that products serve the intended functions.

All wire and cable shall be in first class condition when they are installed. Lo-leak lubricants manufactured for the purpose of a pulling lubricant may be used when necessary.

All wires shall be continuous from outlet and there shall be no unnecessary slack in the conductors.

Bell Ends shall be installed on open ends of conduits PRIOR to pulling of electrical wires.

FIELD QUALITY CONTROL

Prior to energizing, check wire for continuity of circuitry and for short circuits with ohmmeter type testing equipment. Correct malfunction when detected.

Subsequent to wire hook-ups, energize circuitry and demonstrate functioning in accordance with requirements.

Basis of Payment

Sizing, furnishing, installing, and testing electrical wiring from the electrical service, through the meter pedestal/controller cabinet, to the VMS sign and existing highway advisory radio, including all associated incidentals required for a complete and operational system, shall be incidental to the applicable Section 645 pay items. No separate measurement or payment will be made.

# SPECIAL PROVISION

## SECTION 655

## ELECTRICAL

(Category 6A Cable)

### Description

This task shall include the providing and installation of the Category 6A cable shown on the Plan drawings and described herein.

Cable: Category 6A, twisted pair cable. Conductor material shall be bare copper, inner jacket material shall be PVC, cable shall be insulated, shielded and non-gel filled. Must be direct burial type suited for harsh conditions category 6A cable, as approved.

### Basis of Payment

Furnishing, installing, and testing CAT 6A cable for cameras, point-to-point radio antennas, highway advisory radio, and spares, as shown on the plans or otherwise required for a complete and operational system, including all associated incidentals, shall be incidental to the applicable Section 645 pay items. No separate measurement or payment will be made.

SPECIAL PROVISION

SECTION 655

ELECTRICAL

(Fiber Optic Cable)

Description

This task shall include the providing and installation of 62.5/125 micron multimode fiber optic cable as shown on the Plan drawings and described herein. The following Specifications for the selection and installation of fiber-optic cable and associated hardware are intended to ensure a reliable and consistent fiber optic media infrastructure for the MTA. All fiber optic cable termination and the fiber optic patch panels will be provided by the Contractor. Fiber optic patch panels shall be Corning Pretium or approved equal. All fiber termination and testing shall be completed by a technician certified to perform this work.

Cable: 12-Fiber multi-mode Fiber, 100 mbs, 62.5/125 Microns, Outdoor Riser Rater, ST (Male) Connection, as approved

Specifications: Fiber installed must meet or exceed the following Specifications:

- **Multimode fiber installed cable shall be 62.5/125micron core/cladding, armored, rodent deterrent, enhanced grade, multimode, and graded index glass fiber. All materials in the cable shall be dielectric.**

- Installed fiber must meet or exceed the following performance Specifications:

| Wavelength (nm) | Max. Attn.(dB/Km) | Min. Bandwidth (Mhz*Km) |
|---|---|---|
| 850 | 3.5 | 200 |
| 1,300 | 1.5 | 500 |

- Plenum rated cable shall be used for all interior installations. Plenum rated cable shall be:

  - Tight buffered 900 um
  - Mechanical strippable Teflon (for plenum applications)
  - EIA/TIA -598 color coding for fiber optic cable
  - Aramid yarn strength member
  - Capable of supporting a short-term tensile load of 310 lb. without stretching.
  - Capable of bend radii as small as 20 x outside cable diameter (under installation load) and 10 x outside cable diameter (long term load)
  - Capable of a minimum crush resistance of 160 lb./in.

- Optical Cable Corporation D-Series – Rodent Deterrent Riser Rated Distribution Cable shall be used for exterior installations. Cable from other manufacturers will be considered. All cable installed must be approved by the Authority prior to installation.

All cable is to be fully supported throughout its entire run.

At no time shall more than 310 pounds of tension be placed on any fiber cable while it is being pulled through tray or conduit. It is preferred that all fiber cable be pulled with hand power only. If power winches or mechanical advantage devices are used to pull cable, a tensionometer must be used to ensure that maximum tension is not exceeded. Alternatively, a "mechanical fuse" rated at 300 pounds may be included in the linkage. Torsion shall be avoided by the use of a swivel at the cable end. While under tension, a minimum bend radius of 20 times the outside cable diameter will be maintained through the use of pulleys and sheaves where required. After pulling, no bend may have a radius, at rest, of less than 10 times the outside cable diameter.

Each cable is to be permanently labeled at each end with a unique cable number. In addition, labels shall be affixed to the cable at every transition of a vault, hand hole, riser closet, or major pull box.

Each fiber optic strand shall be labeled with a unique identifier at the ST coupler.

Fiber ends are to be terminated in ST-type connectors. No splices will be permitted. The cable shall be continuous run from building to building and LC to server room fiber switch location.

At each end of the cable, sufficient slack (15 - 30') shall be left to facilitate reasonable future relocation of the fiber switch or LC. Slack shall be mounted on walls or upper ladder racks.

Testing: Contractor shall test all long reels with an OTDR for length and transmission anomalies while on the reel prior to installation. It is suggested that each individual fiber in a cable regardless of length be tested with an OTDR for length and transmission anomalies while on the reel before installation.

All multimode fiber strands shall be tested end-to-end for bi-directional attenuation, 850 nm/1300 nm for multimode. Tests should be conducted in compliance with EIA/TIA-526-14 or OFSTP 14, Method B, according to the manufacturer’s instructions for the test set being utilized.

Tests must ensure that the measured link loss for each strand does not exceed the “worst case” allowable loss defined as the sum of the connector loss (based on the number of mated connector pairs at the EIA/TIA-568 B maximum allowable loss of 0.75 dB per mated pair) and the optical loss (based on the performance standard above, 2.1.1 and 2.2.1).

After termination, each fiber shall be tested with an ODTR for length, transmission anomalies, and end-to-end attenuation. Results are to be recorded and supplied to MTA in the form of hard-copy printouts or photographs of screen traces.

After termination each terminated fiber is to be tested for end-to-end loss with a power meter/light source. As above, results are to be recorded and supplied to MTA.

The Contractor shall review all end faces of field terminated connectors with a fiber inspection scope following the final polish. Connector end faces with hackles, scratches, cracks, chips and or surface pitting shall be rejected and repolished or replaced if repolishing will not remove the end face surface defects. The recommended minimum viewing magnifications for connector ends are 100X for multimode fiber.

Basis of Payment

Furnishing, installing, and testing fiber optic cable and patch cables, as shown on the plans or otherwise required for a complete and operational system, including all associated incidentals, shall be incidental to the applicable Section 645 pay items. No separate measurement or payment will be made.

# SPECIAL PROVISION

## SECTION 655

## ELECTRICAL

(Lightning Suppression System)

### 655.81 Description

This task shall include removal of the existing lightning suppression system and furnishing and installing the lightning protection system at each Variable Message Sign location as described in the Plan drawings and described herein. Drawings and general provisions of this Contract, including General Provisions and Special Conditions, apply to work of this Section.

This work shall also include removing the existing lightning suppression system and furnishing and installing a new lightning protection system at each of two existing side-mounted Variable Message Sign (VMS) locations: the Exit 52 on-ramp in Falmouth and the Exit 32 on-ramp in Biddeford. The existing VMS units, support structures, controller cabinets, and associated wiring and equipment shall remain in place, except for components of the existing lightning suppression systems.

The task also includes obtaining a UL Master Label Certificate for the completed lightning protection as a UL Class I ordinary structure.

### 655.82 Submittals

1. Product Data: For air terminals and mounting accessories, grounding conductors, grounding electrodes, and ground connection equipment.

2. Shop Drawings: Delegated Design: Design and Detail lightning protection system, including air-terminal locations, conductor routing and connections, and bonding and grounding provisions. Include indications for use of raceway, data on how concealment requirements will be met, and calculations required by NFPA 780 for bonding of grounded and isolated metal bodies.

3. Qualifications: Qualification data for firms and persons specified in "Quality Assurance" Article to demonstrate their capabilities and experience. Include data on listing or certification by an NRTL or LPI.

4. Inspection: Field inspection reports indicating compliance with UL Master Label Certification.

### 655.83 Quality Assurance

1. Installer Qualifications: Engage an experienced installer who is an NRTL or who is certified by LPI as a Master Installer/Designer. Installer shall be UL listed as a lighting protection installer.

2. Listing and Labeling: All system components utilized in the installation shall comply with the Standard for Lightning Protection Components, UL 96A.

655.84 Coordination

Coordinate installation of lightning protection with installation of other components including variable message sign, cameras and point-to-point radios, electrical wiring, supporting structures and materials, metal bodies requiring bonding to lightning protection components, and finishes.

655.85 Products

Subject to compliance with requirements, provide products by one of the following manufacturers or approved equal:

1. Automatic Lightning Protection.
2. ERICO International Corporation.
3. Harger Lightning Protection, Inc.
4. Heary Bros. Lightning Protection Co. Inc.
5. Independent Protection Co.
6. Robbins Lightning Inc.
7. Thompson Lightning Protection, Inc.

Air Terminals shall be NFPA Class I, solid aluminum, 3/8” diameter, by 24” tall or 10” tall, as indicated on the Contract Drawings. Main conductors as down conductors shall be bare copper in sizes as indicated on the Contract Drawings. Grounding electrodes shall be copper-clad steel, 3/4” diameter by 10’-0” long.

655.86 Execution

All work shall conform to the requirements contained in the latest edition of UL 96A, Installation Requirements for Lightning Protection Systems, and in the latest edition of NFPA 780 Standard for the Installation of Lightning Protection Systems.

Install conductors with direct paths from air terminals to ground connections. Conductors shall be supported for their entire length without travel through free air. No bend of a conductor shall form an included angle of less than 90 degrees or have a radius of bend less than 8 inches.

Conductors shall not be directly attached to aluminum or galvanized steel. Do not combine materials that can form an electrolytic couple that will accelerate corrosion in the presence of moisture unless moisture is permanently excluded from junction of such materials.

Main conductors shall be fastened at intervals not exceeding 3 feet.

Down conductors shall be installed within Schedule 80 PVC conduit for physical protection.

Cable Connections: Use UL listed connectors or approved exothermic-welded connections for all conductor splices and grounding connections.

UL Inspection: Provide inspections as required to obtain a UL Master Label Certification for the system.

LPI Certification: Provide an inspection by an inspector certified by LPI to obtain an LPI certification.

655.87 Method of Measurement

Lightning Suppression Systems will be measured by each lightning suppression system shown on the plans.

655.88 Basis of Payment

The accepted quantity of Lightning Suppression System will be paid for at the Contract unit price per each which shall include excavation, air terminals, grounding rods, heavy duty ground test wells with cover, copper wire, associated hardware for a complete operational system, and system certification.

Payment will be made under:

| Item | Description | Unit |
|---|---|---|
| 655.801 | Lightning Suppression System – Cider Hill Road MM 6.20 | LS |
| 655.802 | Lightning Suppression System – Limerick Road MM 28.30 | LS |
| 655.803 | Lightning Suppression System – Holmes Road MM 43.0 | LS |
| 655.804 | Lightning Suppression System – Mountain Road MM 53.40 | LS |
| 655.805 | Lightning Suppression System – York – Exit 7 | LS |
| 655.806 | Lightning Suppression System – Wells - Exit 19 Eastbound | LS |
| 655.807 | Lightning Suppression System – Wells - Exit 19 Westbound | LS |
| 655.808 | Lightning Suppression System – Kennebunk – Exit 25 | LS |
| 655.809 | Lightning Suppression System – South Portland – Exit 45 | LS |
| 655.810 | Lighting Suppression System – Falmouth – Exit 53 | LS |
| 655.811 | Lightning Suppression System – Biddeford – Exit 32 | LS |

SPECIAL PROVISION

SECTION 656

TEMPORARY SOIL EROSION AND WATER POLLUTION CONTROL

656.10 Basis of Payment: This section shall be amended with the addition of the following:

Payment will be made under:

| Item | Description | Unit |
|---|---|---|
| 656.751 | Temporary Soil Erosion and Water Pollution Control | LS |

# SPECIAL PROVISION

## SECTION 661

## TOLL STIPEND

661.01 Description:

When this item is listed as a Pay Item in the bid, it shall consist of the tolls accrued by the Contractor during the execution of the Contract.

All vehicles, other than those of the project superintendent and supporting traffic control staff that have been issued cards or transponders as described in Special Provision 105.5.1, shall be required to pay all applicable tolls. This includes Contractor employees, subcontractors, equipment delivery, and material delivery.

661.02 Basis of Payment:

Payment for this item will be made in equal installments based on the anticipated duration of the Project. Project duration is calculated using the start date noted in the original schedule submitted by the Contractor and the Substantial Completion Date in the Contract.

The total sum of payments under this item shall not exceed the original Contract amount bid regardless of the fact that the Contractor may shut down their work on the Project or move equipment away from the Project and then back again. All actual tolls incurred by the Contractor shall be incidental to the item and shall include Contractor employees, subcontractors, equipment delivery, material delivery and all other construction-related traffic except as defined above.

Payment will be made under:

| Pay Item | Pay Unit |
|---|---|
| 661.10 Toll Stipend | Lump Sum |

# SPECIAL PROVISION

# SECTION 719

# SIGNING MATERIAL

## Section 719.01 Reflective Sheeting

This Subsection is deleted in its entirety and replaced with the following:

Retroreflective sheeting for signs shall meet at a minimum the requirements for ASTM 4956 – Type XI (Prismatic) manufactured by 3M Company, for all signs.

Reflective sheeting, used in sign construction, shall have been manufactured within the six months immediately prior to the fabrication of each sign. Upon delivery at the job site of each shipment of signs, a letter of certification shall be provided that the reflective sheeting conforms to the requirements.

For Type 1 Guide Signs, all reflective sheeting shall be color matched on each sign unit.

All warning signs shall be fluorescent yellow except for Ramp Advisory Speed signs which shall be yellow.

All Construction Series signs that use orange backgrounds shall be fluorescent orange.

All Pedestrian Signs shall be fluorescent yellow-green.

EZ-PASS Purple shall conform to the FHWA Purple color box.

## 719.02 Demountable High Intensity Reflectorized Letters, Numerals, Symbols, and Borders

This Subsection, including the title, is deleted in its entirety and replaced with the following:

## 719.02 Letters, Numerals, Symbols, and Borders

All signs shall be manufactured utilizing Direct Applied letters, numerals, symbols and borders or be Digitally Printed meeting all sign sheeting manufacturer's (3M) requirements to ensure that the manufacturer's warranty will be in full effect.

All Type 1 overhead signs, Type 1 interchange signs and any other Type 1 signs over 100 square feet shall utilize Direct Applied letters, numerals, symbols and borders.

### Direct Applied

Direct reflectorized applied letters, numerals, symbols and borders shall consist of cut out sheeting that shall meet at a minimum the requirements for ASTM 4956 – Type XI (Prismatic) sheeting. The sheeting material used for the direct applied legend shall be the same type as used for the background.

Digitally Printed

Digital printing methods may be used to produce the sign copy and borders on retroreflective sheeting. Retroreflective sheeting complying with ASTM D 4956 Type XI and designated by the manufacturer as suitable for digital printing traffic signs along with associated ink and premium overlay film. Digitally Printed signs shall meet all sign sheeting manufacturer's (3M) requirements to ensure that the manufacturer's warranty will be in full effect

Transparent and opaque durable inks used in digital printed sign copy and borders shall be as recommended by the sheeting manufacturer (3M). Digital printed traffic colors shall be properly applied and shall have a warranty life of the base retroreflective sign sheeting. Digitally printed signs shall present a flat surface, free from foreign material, and all copy and borders shall be clear and sharp. Digital printed signs shall conform to 70% of the retroreflective minimum values established for its type and color (applicable to traffic colors only), as required by ASTM D 4956. Digital printed signs shall meet the daytime color and luminance, and nighttime color requirements of ASTM D 4956. Printed traffic colors shall meet the accelerated weathering and colorfastness requirements of ASTM D 4956. Digitally printed black shall remain sufficiently opaque for its intended use for the warranty period of the base sheeting. No variations in color or overlapping of colors will be permitted.

Digitally printed traffic signs shall have an integrated engineered match component clear UV- premium protective overlay recommended by the sheeting manufacturer applied to the entire face of the sign.

All digitally printed traffic signs shall utilize an integrated engineered match component system for materials and printing process and equipment. The integrated engineered match component system shall consist of retroreflective sheeting, durable ink(s), and clear protective overlay film, as specified by the sheeting manufacturer, applied to aluminum substrate.

The sign fabricator shall use an integrated engineered match component system digital printer approved by the sheeting manufacturer. Each approved digital printer shall only use the compatible retroreflective sign sheeting manufacturer's engineered match component system products. The sign fabricator shall maintain their digital printer's color calibration according to the sheeting manufacturer's requirements to help ensure digitally printed signs meet the manufacturer's specifications. The fabricator shall be trained by the sheeting manufacturer to produce digitally printed traffic signs that qualify for the sheeting manufacturer's warranty.

General

Type 1 Guide Signs shall have two-inch-tall, series C text that indicates the sign size, and the sign install date (MM/YY) located two inches above the bottom border of the sign.

**APPENDIX A**

Daktronics Shop Drawings

# Maine Turnpike Authority
# Mainline Replacements

## Dynamic Message Signs
## Daktronics Contract # C35276

Technical Submittal

***DD5842313*** ***Rev 0*** ***30 March 2026***

DAKTRONICS

For Overhead Signs

**117 Prince Drive PO Box 5120 Brookings SD 57006**
**tel 605-697-4958 800-833-3157 fax 605-697-4444**
**www.daktronics.com transportationhelp@daktronics.com**

DAKTRONICS

**DD5842313**
**C35276**
**Rev 0 – 30 March 2026**

DAKTRONICS, INC.

**Copyright © 2026**
All rights reserved. While every precaution has been taken in the preparation of this manual, the publisher assumes no responsibility for errors or omissions. No part of this book covered by the copyrights hereon may be reproduced or copied in any form or by any means—graphic, electronic, or mechanical, including photocopying, taping, or information storage and retrieval systems—without written permission of the publisher.

*Vanguard® is a registered trademark of Daktronics, Inc. All others are trademarks of their respective companies.*

# Table of Contents


**Section 1: Introduction ..... 4**

1.1 Daktronics Project Team ..... 4
1.2 Proposed Vanguard Sign ..... 4
1.3 Proposed Traffic Cabinet ..... 4

**Section 2: Vanguard DMS Central Controller Software Cut Sheet ..... 5**

**Appendix A: Catalog Cuts ..... 7**

A.1 VF-2X20- RGB Sign ..... 7
A.2 Traffic Cabinet ..... 7

**Appendix B: Drawings ..... 9**

**Appendix C: NTCIP Testing ..... 11**

**Appendix D: Test Procedures ..... 13**

# Section 1: Introduction

This is a dynamic message sign (DMS) technical submittal prepared for the Vanguard® DMS model which is the sign Daktronics proposes to supply. DMS, sign controller, and control software specifications comprise separate chapters of this submittal. Please refer to the **Table of Contents** for the location of specifications, drawings, and other supporting documentation.

## 1.1 Daktronics Project Team


| | |
|---|---|
| Project Manager: | Mike Weber |
| Phone Number: | 605-691-1008 |
| Email Address: | mike.weber@daktronics.com |
| | |
| Sales Lead: | Michael Welsh |
| Phone Number: | 516-909-6692 |
| Email Address: | michael.welsh@daktronics.com |
| | |
| Applications Engineer: | Glen Wiebe |
| Phone Number: | 225-364-7173 |
| Email Address: | glen.wiebe@daktronics.com |


## 1.2 Proposed Vanguard Sign

1. VF-2020-96x384-20-RGB……. **VF-2020-96x384-Spec Sheet**

    - The DMS will have a right door only.
    - The DMS will have an Auxiliary Control Panel, ACP.
    - The DMS will have 2 Zee Brackets per AASHTO requirements.
    - The DMS will have an equipment cabinet that will house the sign controller, VFC.
    - The Traffic Cabinet will be supplied by Daktronics.
    - Fiber Optic Cable and ends will be provided by Others.

## 1.3 Proposed Traffic Cabinet

1. 334 Ground Mount..... **DD1683856**

    - The traffic cabinet will have LED lights.

# **DAKTRONICS** PRODUCT SPECIFICATION

## SERIES SPECIFICATION

### VF-2020-96x384-20-RGB

| | |
|---|---|
| **Face Panel** | Aluminum mask over polycarbonate face panel |
| **Pixel Pitch** | 20mm |
| **Operating Temp. Range** | -30° F to 165° F (-34° C to 74° C) |
| **Humidity Range** | 0 to 99%, non-condensing |
| **Ventilation** | Positive pressure, forced-air, filtered system |
| **Color Capability** | Full-color RGB (32,000+ colors) |
| **Brightness - Typical Nits** | 12,400 |
| **Viewing Angle** | 30° |
| **Power** | 120-240 VAC single phase (3-wire plus ground) |
| **Controller Location** | External Controller |
| **Control Protocol** | NTCIP, UTMC, and other protocols by request. |
| **Cummunications options** | Cellular, fiber, direct Ethernet and radio Ethernet |
| **Structural Design Standard** | NEMA 3R |
| **Cabinet Enclosure Standard** | AASHTO |
| **NEMA Compliance** | NEMA TS-4, Section 2 Environmental Standards |

Note 1: Consistent with Daktronics policy of continuing product improvement, specifications shown on this document are subject to change without notice.
Note 2: See contract specific drawings for customized product weights
Note 3: Other protocols available. Please consult your Daktronics representative.
Note 4: Display cabinet depth measurement includes "Z" mounting brackets on the rear of the cabinet.
Note 5: Face panel and border will be black. Rear of display is mill finish aluminum.
Note 6: Amps per per leg calculation is based on the maximum load of a typical DMPS, including a fully loaded 15A convenience outlet.
Note 7: Typical power includes a partially-illuminated LED sign (38% of the RGB pixels at full intensity), the sign controller, and ventilation system.

## DISPLAY SPECIFICATION

| | |
|---|---|
| **Overall Cabinet Size (HxWxD)** | 7'11" x 28'1" x 4'0" |
| **Matrix Size (HxW)** | 96 Pixels x 384 Pixels |
| **Display Weight** | 3800 lbs |
| **Total Maximum Power Consumed (Amps per Leg)** | 31 |
| **Typical Power Consumed (Watts)** | 1676 |

201 Daktronics Drive PO Box 5128 Brookings, SD 57006-5128
800-325-8766 605-692-0200 fax 605-697-4700
www.daktronics.com email sales@daktronics.com
Copyright © 2021 Daktronics

DAKTRONICS

# VANGUARD® 334 EQUIPMENT CABINET

| | |
|---|---|
| Cabinet Construction | Aluminum 5052-H32 with continuously welded external seams |
| Access | Three-point latch with stainless steel handle, two sides |
| Weight | 275 lbs. (125 kg) empty |
| Cabinet Dimensions | 5'6" H x 2'0" W x 2'6" D (1.68 m x 0.61 m x 0.76 m) |
| Cabinet Lock[2] | Corbin #2 |
| Door Opening Dimensions | 4'6" H x 1'10" W (1.37 m x 0.56 m) |
| Access Doors | Sealed with 0.5" x 2" closed-cell neoprene gasket |
| Ventilation | Positive-pressure, forced-air ventilation |
| Controller | VFC |
| Environmental Rating | NEMA 3R |
| Lighting | Fluorescent lamp in top of cabinet |
| Power Requirements | 120/240 VAC, single-phase power (3-wire plus ground) |
| Equipment Rack | EIA 19" rack, 32 Rackmount Units (RU) |
| Standard Equipment | Support shelf<br>Slide-out drawer<br>RU 12-position outlet strip<br>12-position panel board<br>Door Handle includes a hasp for external padlocking |



NOTES

1. Consistent with Daktronics continuous improvement program, all product features are subject to change without notice.
2. Although this equipment cabinet comes standard with a Corbin #2 lock, other locks can be provided in accordance with customer specifications.
3. Although this equipment cabinet comes in a standard mill finish, it can be painted in accordance with customer specifications.

117 Prince Drive PO Box 5120 Brookings, SD 57006
tel 800-833-3157 605-692-0200 x57060 fax 605-697-4700
www.daktronics.com/its email transportation@daktronics.com
Copyright © 2021 Daktronics DD1683856 Rev07 021221

DAKTRONICS

# Appendix A: Catalog Cuts

## A.1 VF-2X20- RGB Sign

1. Light Emitting Diode (LED), 30-degree Cree 3-in-1 package RGB
2. Ventilation Fan—Mechatronics UF15PC12
3. DMS Ventilation Filter Media – Fiber Bond – Merv 6
4. Load Center – Square D QO120M100P
5. Circuit Breakers – Square D QO115HM, QO120HM, and QO230 **(VF-2020 and TC)**
6. Surge Protector— nVent
7. Power Supply – 500W
8. Auxiliary Control Panel

## A.2 Traffic Cabinet

9. VFC Controller, VFC
10. Fiber Optic Cable and LC Connecter (Recommendations only. Provided by others)
11. Load Center - Square D QO112M100P
12. Ventilation Fan—Mechatronics UF12A12BTHR
13. Filter – AMF Series
14. Traffic Cabinet Lights

**Notes:** Components may change from supplier to supplier based upon product and component life cycle and availability. Form, fit, and functionality will be maintained as products and components are updated.

# Cut Sheet 1

# CV94D-FCC: PLCC6 3 in 1 SMD LED



## PRODUCT DESCRIPTION

This SMD LED features an IPx8 water resistant rating in a PLCC6 package. These high performance tricolor SMT LEDs are designed to work in a wide range of applications.

The encapsulation resin contains UV inhibitors to minimize the effects of long-term exposure to direct sunlight, resulting in stable light output over the life of the LED. This PLCC6 package has an increased package height to ease in the manufacturing process.

## FEATURES

- Size (mm): 9.4 x 4.2 x 4.0
- Dominant Wavelength
  Red (619 - 624nm)
  Green (520 - 540nm)
  Blue (460 - 480nm)
- Luminous Intensity (mcd)
  Red (3550 - 9000)
  Green (7100 - 18000)
  Blue (1400 - 3550)
- Water-Resistant (IPx8)*
- Moisture Sensitivity Level: 5a
- Lead-Free
- RoHS Compliant

## APPLICATIONS

- Transportation and road way signs
- Channel Letter
- Amusement

*:This part is tested under the condition of assembling it on a PCB with isolating the electrical path by silicone. The leads area of the LED is not IPx8 rated and it's required to insulate for moisture by customer in outdoor application.

Cree LED / 4400 Silicon Drive / Durham, NC 27703 USA / +1.919.313.5330 / www.cree-led.com

© 2021 Cree LED. The information in this document is subject to change without notice. Cree® and the Cree logo are registered trademarks, and the Cree LED logo is a trademark, of Cree, Inc.

## ABSOLUTE MAXIMUM RATINGS ($T_A$ = 25°C)

| Items | Symbol | Absolute Maximum Rating | | | Unit |
|---|---|---|---|---|---|
| | | R | G | B | |
| Forward Current Note 1 | $I_F$ | 50 | 35 | 35 | mA |
| Peak Forward Current Note 2 | $I_{FP}$ | 100 | 100 | 100 | mA |
| Reverse Voltage | $V_R$ | 5 | 5 | 5 | V |
| Power Dissipation | $P_D$ | 140 | 126 | 126 | mW |
| Operation Temperature | $T_{opr}$ | -40 ~ +85 | | | °C |
| Storage Temperature | $T_{stg}$ | -40 ~ +100 | | | °C |
| Junction Temperature | $T_J$ | 110 | 110 | 110 | °C |
| Junction/ambient | $R_{THJA}$ | 350 | 380 | 300 | °C/W |
| Junction/solder point | $R_{THJS}$ | 160 | 200 | 140 | °C/W |
| Electrostatic Discharge Classification(MIL-STD-883E) | ESD | 1000V | | | |

Note:

1. Single-color light
2. Pulse width ≤0.1 msec, duty ≤1/10.

## TYPICAL ELECTRICAL & OPTICAL CHARACTERISTICS ($T_A$ = 25°C)

| Characteristics | Condition | Symbol | Values | | | Unit |
|---|---|---|---|---|---|---|
| | | | R | G | B | |
| Dominant Wavelength | $I_F$ = 20mA | $\lambda_{DOM}$ | 619~624 | 520~540 | 460~480 | nm |
| Spectral bandwidth at 50% $I_{REL}$ max | $I_F$ = 20mA | $\Delta\lambda$ | 24 | 38 | 28 | nm |
| Forward Voltage | $I_F$ = 20mA | $V_{F(avg)}$ | 2.1 | 2.8 | 2.9 | V |
| | | $V_{F(max)}$ | 2.8 | 3.6 | 3.6 | V |
| Luminous Intensity | $I_F$ = 20mA | $I_{V(min)}$ | 3550 | 7100 | 1400 | mcd |
| | | $I_{V(avg)}$ | 6000 | 12000 | 2300 | mcd |
| Reverse Current (max) | $V_R$ = 5 V | $I_R$ | 10 | 10 | 10 | μA |

* Continuous reverse voltage can cause LED damage.

© 2021 Cree LED. The information in this document is subject to change without notice. Cree® and the Cree logo are registered trademarks, and the Cree LED logo is a trademark, of Cree, Inc.

## INTENSITY BIN LIMIT

| Red (20 mA) | | | Green (20 mA) | | | Blue (20 mA) | | |
|---|---|---|---|---|---|---|---|---|
| Bin Code | Min.(mcd) | Max.(mcd) | Bin Code | Min.(mcd) | Max.(mcd) | Bin Code | Min.(mcd) | Max.(mcd) |
| Yb | 3550 | 4500 | B0 | 7100 | 9000 | Wb | 1400 | 1800 |
| Z0 | 4500 | 5600 | C0 | 9000 | 11200 | Xa | 1800 | 2240 |
| A0 | 5600 | 7100 | D0 | 11200 | 14000 | Xb | 2240 | 2800 |
| B0 | 7100 | 9000 | E0 | 14000 | 18000 | Ya | 2800 | 3550 |

* Tolerance of measurement of luminous intensity is ±10%.

## COLOR BIN LIMIT

| Red (20 mA) | | | Green (20 mA) | | | Blue (20 mA) | | |
|---|---|---|---|---|---|---|---|---|
| Bin Code | Min.(nm) | Max.(nm) | Bin Code | Min.(nm) | Max.(nm) | Bin Code | Min.(nm) | Max.(nm) |
| RB | 619 | 624 | G7 | 520 | 525 | B3 | 460 | 465 |
| | | | G23 | 522.5 | 527.5 | B23 | 462.5 | 467.5 |
| | | | G8 | 525 | 530 | B4 | 465 | 470 |
| | | | G45 | 527.5 | 532.5 | B45 | 467.5 | 472.5 |
| | | | G9 | 530 | 535 | B5 | 470 | 475 |
| | | | G67 | 532.5 | 537.5 | B67 | 472.5 | 477.5 |
| | | | Ga | 535 | 540 | B6 | 475 | 480 |

* Tolerance of measurement of dominant wavelength is ±1 nm.

© 2021 Cree LED. The information in this document is subject to change without notice. Cree® and the Cree logo are registered trademarks, and the Cree LED logo is a trademark, of Cree, Inc.

## ORDER CODE TABLE

| Kit Number | Color | Luminous Intensity (mcd) | | Dominant Wavelength (nm) | | | | Package |
|---|---|---|---|---|---|---|---|---|
| | | Min. | Max. | Color Bin | Min.(nm) | Color Bin | Max. (nm) | |
| CV94D-FCC-CYbB0B0E0WbYaBB7a363 | Red | 3550 | 9000 | RB | 619 | RB | 624 | Reel |
| | Green | 7100 | 18000 | G7 | 520 | Ga | 540 | Reel |
| | Blue | 1400 | 3550 | B3 | 460 | B6 | 480 | Reel |
| CV94D-FCC-CYb2B02Wb2BB7D3D3 | Red | Any 2 Intensity bin from Yb(3550) - B0(9000) | | RB | 619 | RB | 624 | Reel |
| | Green | Any 2 Intensity bin from B0(7100) - E0(18000) | | Any 1 hue bin from G7(520)-Ga(540) | | | | Reel |
| | Blue | Any 2 Intensity bin from Wb(1400) - Ya(3550) | | Any 1 hue bin from B3(460)-B6(480) | | | | Reel |

Notes:

- The above kit numbers represent order codes that include multiple intensity-bin and color-bin codes. Only one intensity-bin code and one color-bin code will be shipped on each bulk. Single intensity-bin code and single color-bin codes will not be orderable.
- Please refer to the HB LED Lamp Reliability Test Standards document for reliability test conditions.
- Please refer to the HB LED Lamp Soldering & Handling document for information about how to use this LED product safely.

© 2021 Cree LED. The information in this document is subject to change without notice. Cree® and the Cree logo are registered trademarks, and the Cree LED logo is a trademark, of Cree, Inc.

## GRAPHS

The data below are collected from statistical figures that do not necessarily correspond to the actual parameters of each single LED. Hence, these data will be changed without further notice.

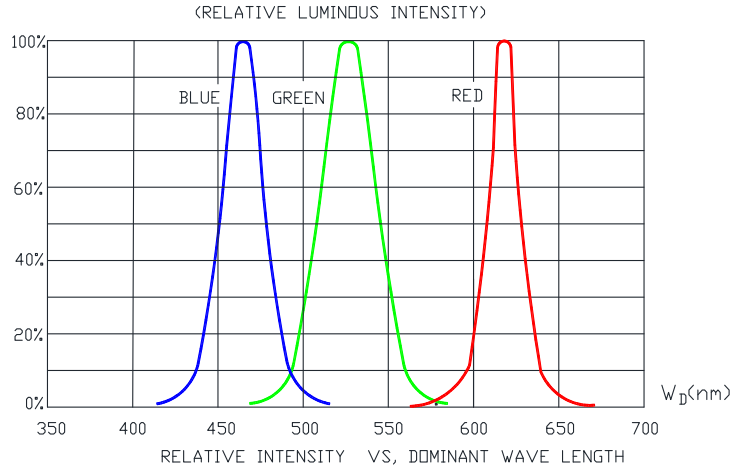


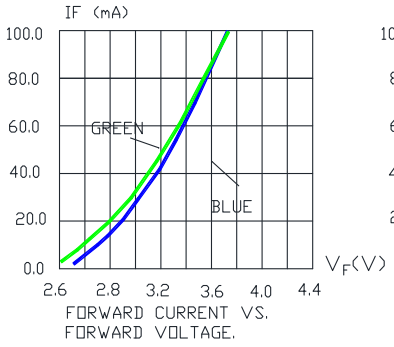


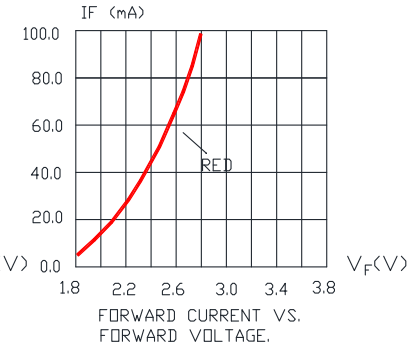


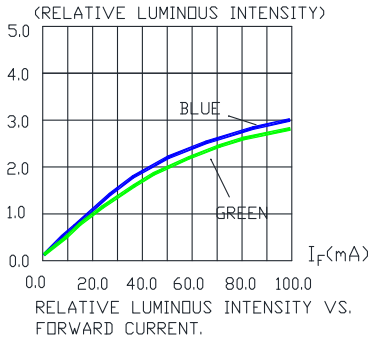


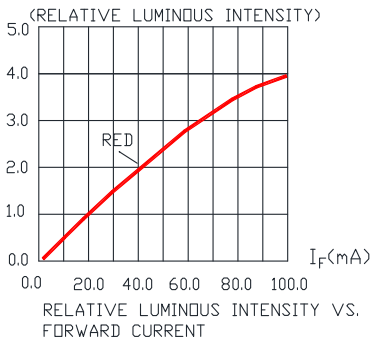


© 2021 Cree LED. The information in this document is subject to change without notice. Cree® and the Cree logo are registered trademarks, and the Cree LED logo is a trademark, of Cree, Inc.

## GRAPHS

The data below are collected from statistical figures that do not necessarily correspond to the actual parameters of each single LED. Hence, these data will be changed without further notice.

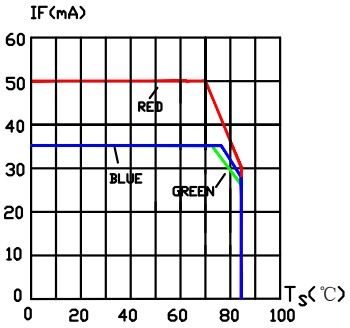


MAXIMUM FORWARD DC CURRENT
VS, SOLDER POINT TEMPERATURE.

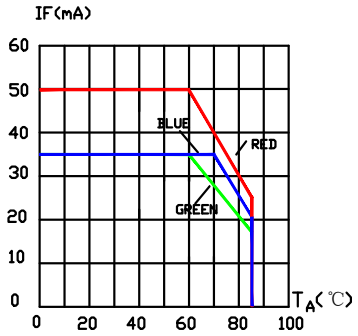


MAXIMUM FORWARD DC CURRENT
VS, AMBIENT TEMPERATURE.

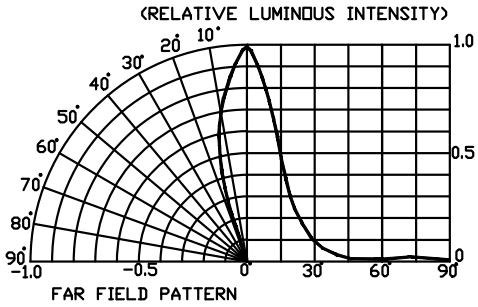


FAR FIELD PATTERN

© 2021 Cree LED. The information in this document is subject to change without notice. Cree® and the Cree logo are registered trademarks, and the Cree LED logo is a trademark, of Cree, Inc.

## MECHANICAL DIMENSIONS

All dimensions are in mm.

Tolerance of measurement of the dimension is ±0.1.

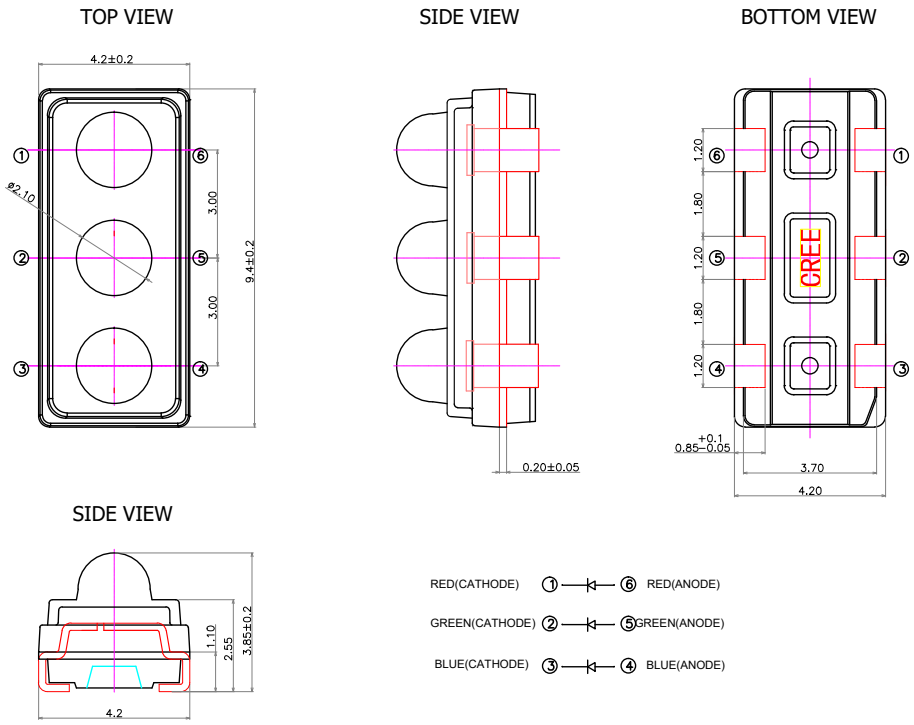


## NOTES

**RoHS Compliance**

The levels of RoHS restricted materials in this product are below the maximum concentration values (also referred to as the threshold limits) permitted for such substances, or are used in an exempted application, in accordance with EU Directive 2011/65/EC (RoHS2), as implemented January 2, 2013. RoHS Declarations for this product can be obtained from your Cree LED representative or from the Product Ecology section of the Cree LED website.

**Vision Advisory**

WARNING: Do not look at an exposed lamp in operation. Eye injury can result.

© 2021 Cree LED. The information in this document is subject to change without notice. Cree® and the Cree logo are registered trademarks, and the Cree LED logo is a trademark, of Cree, Inc.

## KIT NUMBER SYSTEM

Cree LED lamps are tested and sorted into performance bins. A bin is specified by ranges of color, forward voltage, and brightness.

Cree LEDs are sold by order codes in combinations of bins called kits. Order codes are configured in the following manner:

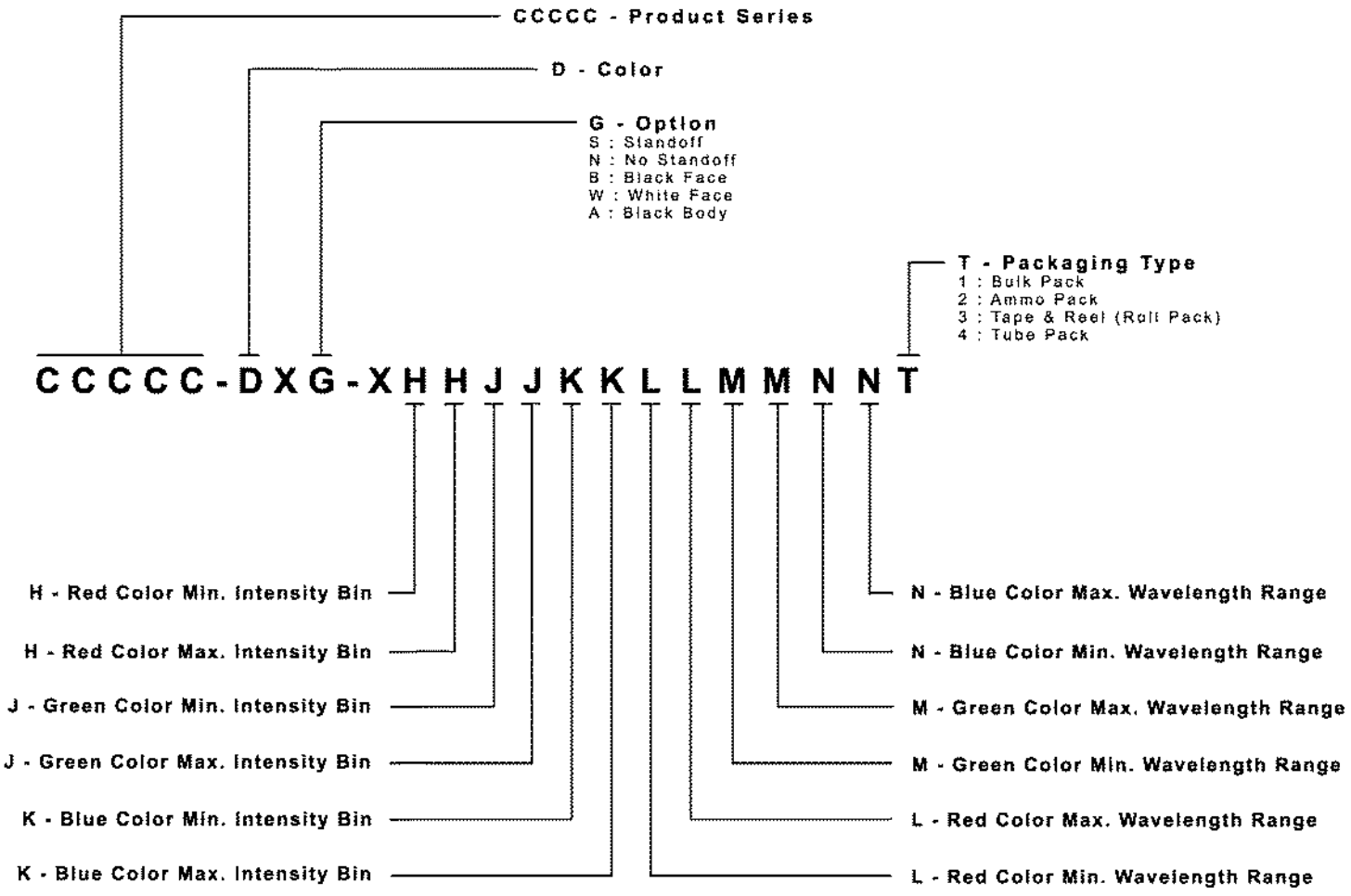


© 2021 Cree LED. The information in this document is subject to change without notice. Cree® and the Cree logo are registered trademarks, and the Cree LED logo is a trademark, of Cree, Inc.

## REFLOW SOLDERING

- The CV94D-FCC is rated as a MSL 5a product.
- The recommended floor life out of bag is 24hrs.
- The temperature profile is as below

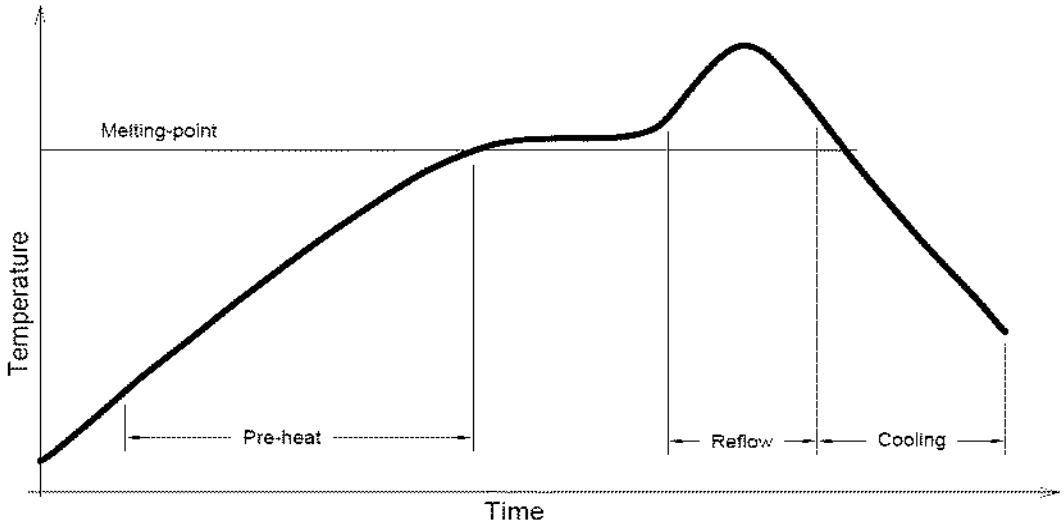


Use only with CV94D-FCC

| Solder |
|---|
| Average ramp-up rate = 4°C/s max |
| Preheat temperature = 150°C ~200°C |
| Preheat time = 120s max |
| Ramp-down rate = 6°C/s max |
| Peak temperature = 250°C max |
| Time within 5°C of actual Peak Temperature = 10s max |
| Duration above 217°C is 60s max |

## NOTES

- The packaging sizes of these SMD products are very small and the resin is still soft after solidification. Users are required to handle with care. Never touch the resin surface of SMD products.
- To avoid damaging the product's surface and interior device, it is recommended to choose a special nozzle to pick up the SMD products during the process of SMT production. If handling is necessary, take special care when picking up these products. The following method is necessary:

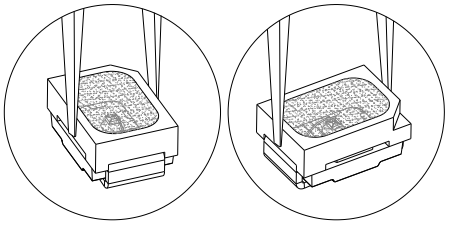

© 2021 Cree LED. The information in this document is subject to change without notice. Cree® and the Cree logo are registered trademarks, and the Cree LED logo is a trademark, of Cree, Inc.

## PACKAGING

- The boxes are not water resistant and they must be kept away from water and moisture.
- The LEDs are packed in cardboard boxes after packaging in normal or anti-electrostatic bags.
- Cardboard boxes will be used to protect the LEDs from mechanical shocks during transportation.
- The reel pack is applied in SMD LED.
- Max 1200 pcs per reel.

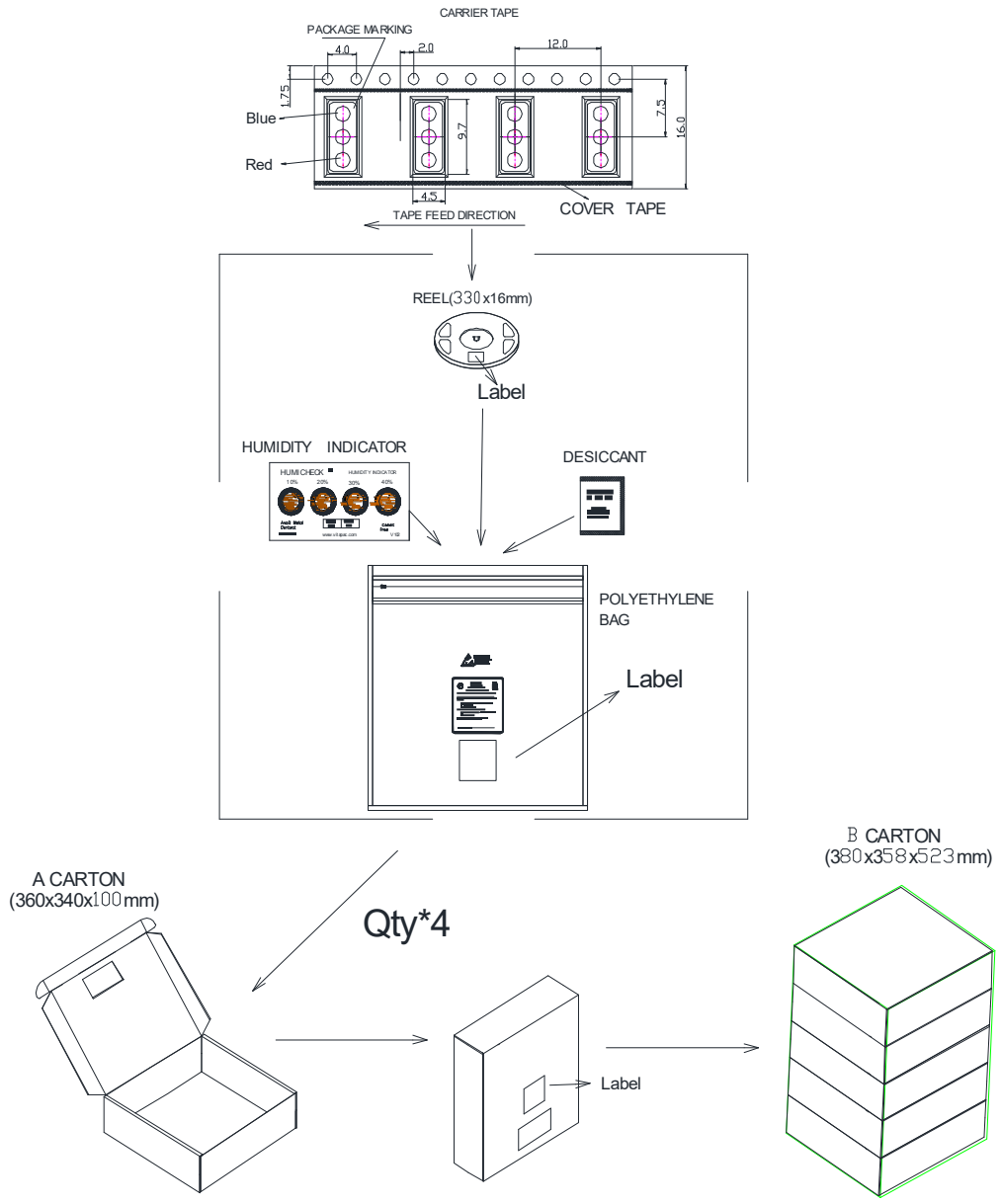


© 2021 Cree LED. The information in this document is subject to change without notice. Cree® and the Cree logo are registered trademarks, and the Cree LED logo is a trademark, of Cree, Inc.

# Mouser Electronics

Authorized Distributor

Click to View Pricing, Inventory, Delivery & Lifecycle Information:

Cree LED:

CV94D-FCC-CYB2B02WB2BB7D3D3 CV94D-FCC-CYBB0B0E0WBYABB7A363

# Cut Sheet 2

# UF15PC series

MECHATRONICS



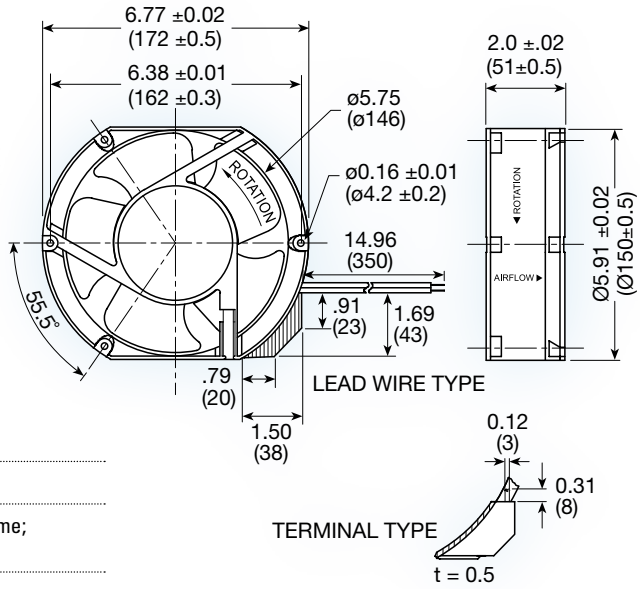


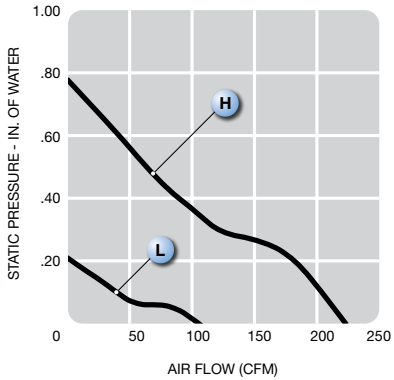


**(172 x 150 x 51 mm)**
6.77 x 5.91 x 2.0 inches

| | |
|---|---|
| Operating voltage: | 115 or 230 VAC |
| Construction: | aluminum die cast frame; UL94V-0 PBT impeller |
| Bearing option: | ball bearing |
| Motor: | permanent split capacitor |
| Air Flow: | exhaust over struts |
| Connection: | terminal or 22 AWG lead wire |
| Protection: | thermal |
| Option: | dual voltage 115/130VAC; IP55; IP55 + salt fog, tachometer output |

| Model No. | Rated Voltage | Freq. | Input Power | Rated Cur. | Locked Cur. | Speed | Air Volume | | Max. Static Pressure ($H_2O$) | | Sound Noise | Weight |
|---|---|---|---|---|---|---|---|---|---|---|---|---|
| | V | HZ | W | A | A | RPM | M³/Min. | CFM | MM | INCH | dbA | kg |
| **UF15PC12-__H** | 115 | 60 | 31 | 0.25 | 0.43 | 3,400 | 6.4 | 226 | 20.0 | 0.79 | 58 | 0.80 |
| **UF15PC23-__H** | 230 | 60 | 29 | 0.12 | 0.19 | 3,400 | 6.4 | 226 | 20.0 | 0.79 | 58 | 0.80 |
| **UF15PC12-__L** | 115 | 60 | 31 | 0.15 | 0.20 | 1,700 | 3.0 | 106 | 5.5 | 0.22 | 37 | 0.80 |
| **UF15PC23-__L** | 230 | 60 | 29 | 0.07 | 0.09 | 1,700 | 3.0 | 106 | 5.5 | 0.22 | 37 | 0.80 |

# Cut Sheet 3

# Rigid Pad Filter Media
## MERV 6 • Spor-Ax® Antimicrobial



### Rigid Pad Filter Media

- Spor-Ax® Antimicrobial
- MERV 6
- Available in 25” x 48” and 36” x 48” sheets - packed flat in cartons
- Easily cut with scissors, paper cutter or band saw for instant custom sizes.
- Durable, rigid construction

### Cut-To-Size, Ready To Use

## Rigid Pad

Fiber Bond’s Rigid Pad combines strength, ease-of-use and economy in one synthetic media. It’s the perfect solution when an *instant* filter is needed.

**Custom Sizes Made Easy**
A sheet of Rigid Pad can easily be cut to provide a custom filter. No reason to rely on flimsy throw aways or costly 1” pleats.

**Spor-Ax Antimicrobial Keeps Filter Media Free From Mold, Mildew, Algae & Fungi**
Fiber Bond’s Spor-Ax antimicrobial is part of the manufacturing process, not a costly, post-application. The elimination of microbial growth helps extend service life.

FIBER BOND
110 Menke Road, Michigan City, IN 46360 ● Phone (219) 879-4541 ● Fax (219) 874-7502
Email: customer.service@fiberbond.net ● www.fiberbond.net

FIBER BOND

The **Best** Filters Begin With The **Best** Media



# Rigid Pad Filter Technical Data



## Rigid Pad Filter Media

**Filter Media:** Polyester/Viscose
**Initial Resistance**: 0.14" w.g. at 295 fpm
**Flammability:** UL 900 Classified
**Performance:** MERV 6 in accordance with independent test method ASHRAE 52.2-2007
**Recommended Final Resistance:** 0.60" w.g.
**Maximum Operating Temperature:** 200° F

## Rigid Pad Filter Media Specifications

Media shall be comprised of polyester and viscose fibers. The media shall exhibit exceptional rigidity through the entire structure.

The media shall be green in color.

The media shall contain Spor-Ax® antimicrobial which effectively controls microbial growth on the filter media.

The media shall be MERV 6 as tested by ASHRAE Standard 52.2- 2007.

Independent test results in accordance with ASHRAE 52.2-2007

Fiber Bond has a policy of continuous product research and improvement and reserves the right to alter design and specifications without notice.
September 2017

**Rigid Pad Filter Media Resistance vs Air Flow**

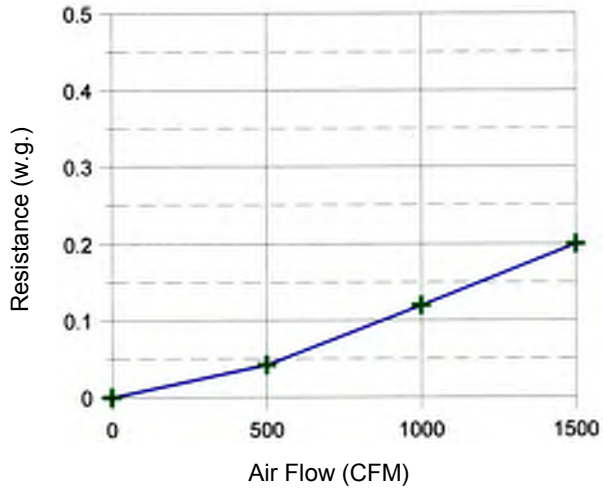


**Rigid Pad Filter Media Removal Efficiency vs Particle Size**

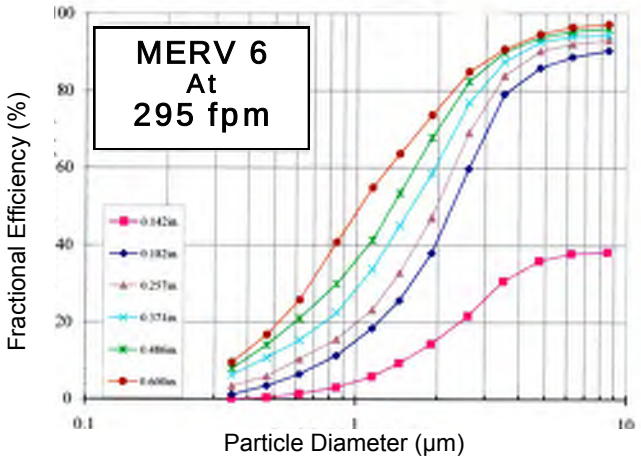


110 Menke Road, Michigan City, IN 46360 ● Phone (219) 879-4541 ● Fax (219) 874-7502
Email: customer.service@fiberbond.net ● www.fiberbond.net

# Cut Sheet 4

# Product data sheet
## Characteristics

# QO120M100P
Load center, QO, 1 phase, 20 spaces, 20 circuits, 100A convertible main breaker, PoN, NEMA, UL



## Main

| | |
|---|---|
| Marketing Trade Name | QO |
| Product | Load Center |

## Complementary

| | |
|---|---|
| Tightening torque | Cover 20 lb.in |
| Load Center Type | Main breaker |
| Line Rated Current | 100 A |
| Number of spaces | 20 |
| Short Circuit Current Rating | 22 kA |
| Maximum Number of Single Pole Circuits | 20 |
| Maximum Number of Tandem Breakers | 4 |
| Number of Phases | 1 phase |
| Box number | 6 |
| Maximum Height | 17.92 in (455.17 mm) |
| Maximum Width | 14.25 in (361.95 mm) |
| Maximum Depth | 3.75 in (95.25 mm) |

## Environment

| | |
|---|---|
| Enclosure Rating | NEMA 1 |
| Ambient air temperature for operation | 23 °F (-5 °C)<br>104 °F (40 °C) |
| Product certifications | UL Listed |

## Ordering and shipping details

| | |
|---|---|
| Category | 10001 - QO PON 1PH LC,12-60 CKT, MB N1 |
| Discount Schedule | DE3A |
| GTIN | 00785901609476 |
| Nbr. of units in pkg. | 1 |
| Package weight(Lbs) | 1 lb(US) (0.45 kg) |
| Returnability | Yes |

The information provided in this documentation contains general descriptions and/or technical characteristics of the performance of the products contained herein.
This documentation is not intended as a substitute for and is not to be used for determining suitability or reliability of these products for specific user applications.
It is the duty of any such user or integrator to perform the appropriate and complete risk analysis, evaluation and testing of the products with respect to the relevant specific application or use thereof.
Neither Schneider Electric Industries SAS nor any of its affiliates or subsidiaries shall be responsible or liable for misuse of the information contained herein.

## Approximate Dimensions

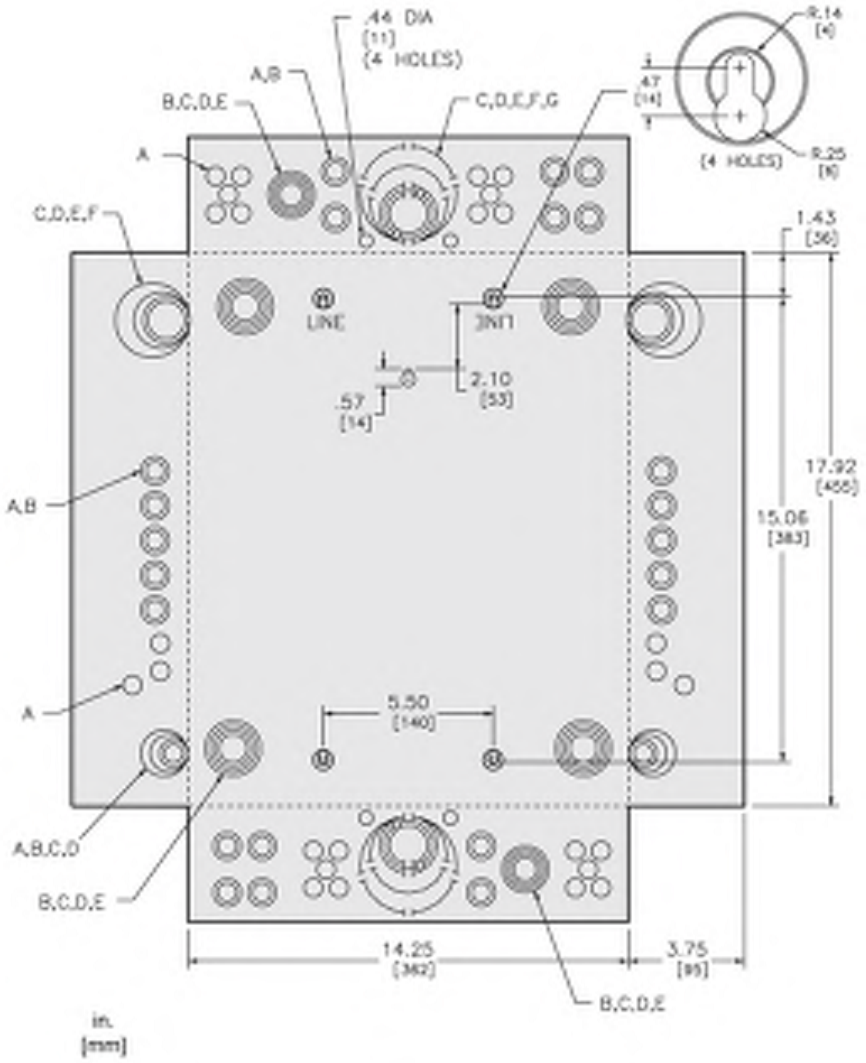


| KNOCKOUTS | | | | | | | |
|---|---|---|---|---|---|---|---|
| SYMBOL | A | B | C | D | E | F | G |
| IN | .50 | .75 | 1.00 | 1.25 | 1.50 | 2.00 | 2.50 |
| MM | 13 | 19 | 25 | 32 | 38 | 51 | 64 |

## Connections and Wiring Diagrams

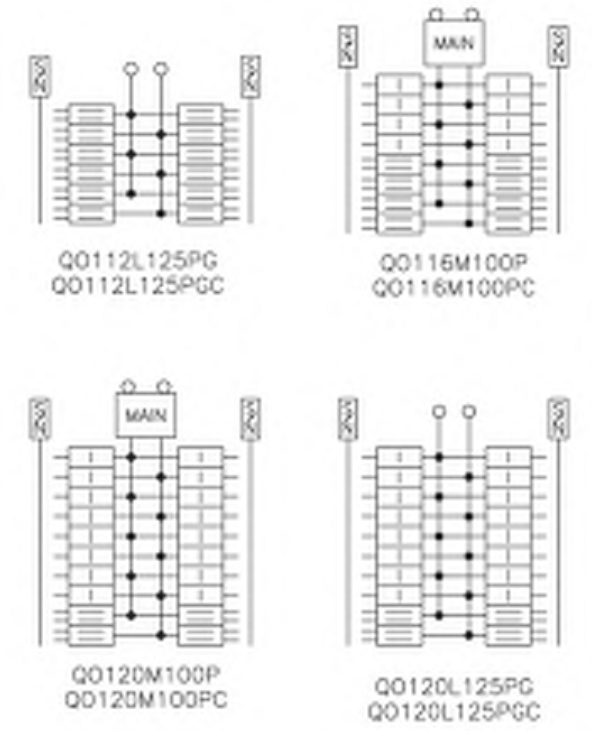

# Cut Sheet 5

# QO® and QOB
## Miniature Circuit Breakers

Class 730




**CONTENTS**

**Description** . . . . . **Page**
General Description and Ratings . . . . . 3
Special Application Circuit Breakers . . . . . 7
Accessories . . . . . 15
Trip Curves . . . . . 18
Dimensions . . . . . 35
Glossary . . . . . 38

SQUARE D
GROUPE SCHNEIDER

## GENERAL DESCRIPTION

Underwriters Laboratories Inc. (UL), the National Electrical Manufacturers Association (NEMA) and the National Electrical Code (NEC) define a circuit breaker as "A device designed to open and close a circuit by non-automatic means, and to open the circuit automatically at a predetermined overcurrent without injury to itself when properly applied within its rating."

### QO® and QOB Circuit Breakers

QO® (plug-on) and QOB (bolt-on) one-, two- and three-pole thermal-magnetic circuit breakers provide overcurrent protection and switching on ac and dc systems. Plug-on QO circuit breakers are for use in QO load centers, NQOD panelboards or SPEED-D® switchboard distribution panels. Bolt-on QOB circuit breakers are for use in NQOD panelboards.

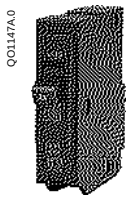

One-pole QO
Circuit Breaker

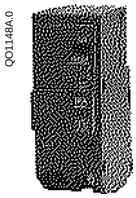

Two-pole QO
Circuit Breaker

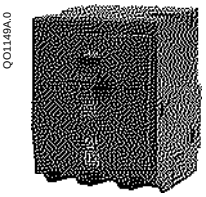

Three-pole QO
Circuit Breaker

### Operating Mechanism

QO and QOB circuit breakers have an overcenter, trip-free toggle mechanism with quick-make, quick-break action and positive handle indication. The tripping mechanisms in two- and three-pole circuit breakers operate such that an overcurrent on any pole of the circuit breaker will cause all poles of the circuit breaker to open simultaneously. Each pole has an individual thermal-magnetic trip element calibrated for 40°C ambient temperature**.**

### Trip Indication

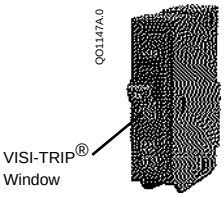


QO and QOB circuit breakers have VISI-TRIP® trip indication which provides a visual identification that the circuit breaker has tripped and interrupted the circuit. When the circuit breaker has tripped, the handle assumes a center position and the red VISI-TRIP indicator appears in a window in the circuit breaker case. The VISI-TRIP is only visible when the circuit breaker has tripped. Trip indication immediately distinguishes the circuit from any other circuit which is merely in the on or off position. The circuit breaker can be reset by pushing the handle to OFF and then to ON.

### Construction Standards

QO and QOB circuit breakers are built in accordance with UL Standard 489, CSA 22, NOM/ANCE and NEMA Standard AB1. They also meet Federal Specification W-C-375B/GEN. The 10–70 ampere circuit breakers are UL Listed as Type QO or Type QOB under UL File E84967 and are CSA Certified under File LR92886. The 80–100 ampere circuit breakers are UL Listed as Type QO or Type QOB under UL File E84967 and CSA Certified under File LR92886.


© 1998 Square D All Rights Reserved

## RATINGS

When designing an electrical distribution system, overcurrent protective devices are generally selected based on performance requirements. Factors influencing this selection include system voltage, continuous current, interrupting rating and frequency.

### Voltage Rating

The circuit breaker must have a voltage rating greater than, or equal to, the system voltage. When a circuit breaker clears an overcurrent, it is done in two steps. First, the current sensing system identifies the overcurrent and releases the tripping mechanism. This results in a parting of the contacts. The circuit breaker must then extinguish the voltage arc across the contacts. If the circuit breaker has the correct voltage rating, it can efficiently extinguish this voltage arc. QO and QOB circuit breakers are rated in the following UL Standard 489 voltages:

- 120 Vac
- 208/120 Vac
- 120/240 Vac
- 240 Vac
- 48 Vdc (10-70 A circuit breakers only)

### Interrupting Rating

The interrupting rating of a circuit breaker is the highest current at rated voltage that the circuit breaker is intended to interrupt under standard test conditions. Circuit breakers must be chosen so that the interrupting rating is equal to or greater than the maximum available short-circuit current at the point where the circuit breaker is applied in the system. See the table on the following page.


© 1998 Square D All Rights Reserved

## Interrupting Rating

QO115HM
QO120HM
QO230

| Circuit Breaker Type | Number of Poles | Ampere Rating | UL Listed Interrupting Rating—RMS Sym. Amperes | | | |
|---|---|---|---|---|---|---|
| | | | AC Volts | | | DC Volts* |
| | | | 120 Vac | 120/240 Vac | 240 Vac | 48 Vdc |
| QO<br>QOB | 1 | 10–70 | 10 kA | 10 kA | NA | 5 kA |
| | | 80–100 | 10 kA | 10 kA | NA | NA |
| | 2 | 10–70 | 10 kA | 10 kA | NA | 5 kA |
| | | 80–100 | 10 kA | 10 kA | NA | NA |
| | 3 | 15–60 | 10 kA | 10 kA | 10 kA | 5 kA |
| | | 70–100 | 10 kA | 10 kA | 10 kA | NA |
| QO-H▼<br>QOB-H▼ | 2 | 15–100 | 10 kA | 10 kA | 10 kA | NA |
| QO-VH<br>QOB-VH | 1 | 15–30 | 22 kA | 22 kA | NA | NA |
| | 2 | 15–100 | 22 kA | 22 kA | NA | NA |
| | 3 | 15–100 | 22 kA | 22 kA | 22 kA | NA |
| QOH | 2 | 40–125 | 42 kA | 42 kA | NA | NA |
| QH<br>QHB | 1 | 15–30 | 65 kA | 65 kA | NA | NA |
| | 2 | 15–30 | 65 kA | 65 kA | NA | NA |
| | 3 | 15–30 | 65 kA | 65 kA | 65 kA | NA |
| QO-GFI<br>QOB-GFI | 1 | 15–30 | 10 kA | NA | NA | NA |
| | 2 | 15–60 | 10 kA | 10 kA | NA | NA |
| QO-AFI | 1 | 15–20 | 10 kA | NA | NA | NA |
| QO-EPD<br>QOB-EPD | 1 | 15–30 | 10 kA | NA | NA | NA |
| | 2 | 15–30 | 10 kA | 10 kA | NA | NA |
| QO-VHGFI<br>QOB-GFI | 1 | 15–30 | 22 kA | NA | NA | NA |
| QO-PL | 1 | 15–30 | 10 kA | 10 kA | NA | NA |
| | 2 | 15–30 | 10 kA | 10 kA | NA | NA |
| | 3 | 15–30 | 10kA | 10 kA | 10 kA | NA |

*DC ratings do not apply to circuit breakers rated 10 amperes.
NA = Not applicable.
10,000 A and 5,000 A are 1Ø–3Ø.
▼ UL Listed 5,000 AIR on three-phase grounded B-phase.

## DC Voltage Rating

QO and QOB circuit breakers are available with a UL Listed 48 Vdc rating. See the table above. Refer to Square D Application Guide SD361R1 and Square D Product Data Bulletin D-453 for additional information on dc-rated circuit breakers.

## Frequency Rating

The standard rated frequency for circuit breakers is 60 Hz. Circuit breakers are also rated for dc applications as in the table above. Many Square D circuit breakers can also be applied on 50 Hz systems without derating. GFCI, AFCI and EPD devices are rated for 60 Hz operation only. Frequencies can affect the thermal, magnetic and short-circuit characteristics of circuit breakers. Refer to Square D Application Guide SD361R1 before applying circuit breakers on systems at frequencies other than 50/60 Hz.

## IEC Rating

IEC rated QO circuit breakers are available. For further information contact a Square D Field Sales Office.


© 1998 Square D All Rights Reserved

## TERMINOLOGY

### HACR

HACR is a term used to designate circuit breakers which have been certified to be used on heating, air conditioning and refrigeration loads. QO Type circuit breakers meet the requirements of Paragragh 7.7 in the 9th edition of the UL Standard and are suitable for group motor applications requiring HACR listing.

This means these circuit breakers can be used to meet the requirements of Article 430 of the NEC. This article indicates that each circuit breaker must be of the inverse time type and be approved for group installation.

QO and QOB circuit breakers, except GFI, AFI and EPD, are Listed with UL as HACR Type and are labeled accordingly.

Other 120/240 and 240 Vac circuit breakers which can be supplied with the HACR label are:

- QO-HM and QOB-HM
- QO-VH and QOB-VH
- QO-H and QOB-H
- QOH
- QH and QHB
- QO-PL and QOB-PL

### Terminations

The 10–30 ampere circuit breakers have pressure plate terminals suitable for two-wire copper terminations. QO-GFI 15–30 ampere and QO-AFI circuit breakers have pressure plate terminals suitable for single-wire terminations. These circuit breakers are suitable for use with 60°C or 75° C conductors.

The QO-PL and 35–150 ampere circuit breakers have box-type lugs suitable for single-wire terminations. These circuit breakers are suitable for use with 75°C conductors. See table below.

| Circuit Breaker Types | Ampere Rating | Wire Size (AWG/kcmil) | |
|---|---|---|---|
| | | Aluminum | Copper |
| QO | 10, 25, 30<br>15, 20<br>35–70<br>80–125 | #12–#8 (4–6 $mm^2$)<br>#12–#8 (4–6 $mm^2$)<br>#8–#2 (10–25 $mm^2$)<br>#12–#2/0 (4–50 $mm^2$) | #14–#8 (2.5–5 $mm^2$)<br>(2) #14–#10 (2.5–4 $mm^2$)<br>#8–#2 (10–25 $mm^2$)<br>#12–#2/0 (4–50 $mm^2$) |
| QO-VH | 110–125 | #12–#2/0 (4–50 $mm^2$) | #12–#2/0 (4–50 $mm^2$) |
| QOB-VH | 110–150 | #4–300 (25–150 $mm^2$) | #4–300 (25–150 $mm^2$) |
| QOT, QO-AFI | 15–20 | #12–#8 (4–6 $mm^2$) | #14–#8 (2.5–5 $mm^2$) |
| QO-GFI | 15–30<br>40, 50, 60 | #12–#8 (4–6 $mm^2$)<br>- - - - - | #14–#8 (2.5–5 $mm^2$)<br>#8–#4 (10–$mm^2$) |
| QO-PL | 15–30 | #12–#2 (4–25 $mm^2$) | #14–#2 (2.5–25 $mm^2$) |
| QOH, QOVH, QO-H | 40–100<br>80–125 | #12–#2/0 (4–50 $mm^2$) | #12–#2/0 (4–50 $mm^2$) |


© 1998 Square D All Rights Reserved

## SPECIAL APPLICATION CIRCUIT BREAKERS

There are several special application circuit breakers in the QO family. This section describes them and provides application information for their use. The following list includes the circuit breakers discussed in this section.

- QO-HM and QOB-HM High-magnetic Circuit Breakers
- QO-HID and QOB-HID Circuit Breakers
- QO and QOB Miniature Switches
- QOK and QOBK Key-operated Circuit Breakers
- QO-GFI and QOB-GFI QWIK-GARD® Circuit Breakers
- QO-EPD and QOB-EPD Equipment Protection Devices
- QO-SWN and QOB-SWN Switch Neutral Circuit Breakers
- QOT Tandem Circuit Breakers
- QO-PL and QOB-PL POWERLINK® Circuit Breakers
- QO-AFI Arc-D-tect™ Circuit Breakers

### QO-HM and QOB-HM High Magnetic Circuit Breakers

QO-HM and QOB-HM high-magnetic circuit breakers are recommended for area lighting (athletic fields, parking lots, outdoor signs, etc.) when using lamps of inherent high inrush current, individual dimmer applications or other applications where high inrush current exceeds standard tripping conditions. These circuit breakers are available in one-pole 15 and 20 amperes only. QO-HM and QOB-HM circuit breakers are physically interchangeable with standard QO and QOB circuit breakers and accommodate the complete range of QO accessories.

### QO-HM and QOB-HM Circuit Breaker Magnetic Hold Levels

| One-pole QO-HM and QOB-HM Circuit Breakers | Maximum Full Cycle Magnetic Hold Level |
|---|---|
| 15 amperes | 315 to 525 amperes |
| 20 amperes | 322 to 537 amperes |

QO-HM and QOB-HM circuit breakers are manufactured with the magnetic trip point calibrated at a much higher level than standard QO and QOB circuit breakers. The table above lists the magnetic trip levels to which high-magnetic circuit breakers are calibrated.


© 1998 Square D All Rights Reserved

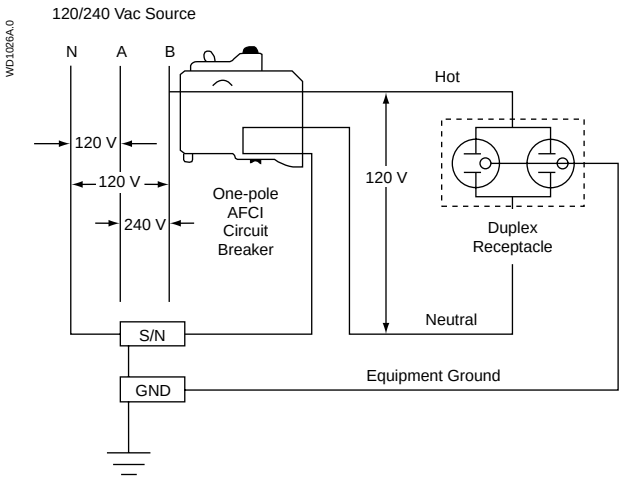


**AFCI Arc-D-tect Circuit Breaker Installation**

## ACCESSORIES

Most QO and QOB circuit breakers can be supplied with electrical accessories factory-installed on one-, two- or three-pole circuit breakers. Field-installed handle accessories are available as shown in the table on page 17. See the Special Application Circuit Breakers section for information on accessory availability. Electrical accessories are not available on AFCI circuit breakers.

Only one electrical accessory can be installed per circuit breaker. Electrical accessories are factory-installed only. No field modification is possible. All electrical accessories occupy one additional pole space. The proper suffix number must be added to the circuit breaker catalog number to order an accessory. See the table below for available suffix numbers.

Field-installed accessories are also available for QO and QOB circuit breakers. All field-installed accessories must be ordered separately. See the table on page 17 for field-installed accessory part numbers.

### Factory-installed Electrical Accessories

| Accessory | Description | | Volts | Coil Burden VA | Catalog Suffix |
|---|---|---|---|---|---|
| Shunt Trip | Used for tripping the circuit breaker electrically using a remote control source, dc and/or 50/60 Hz Vac as indicated.<br><br>Includes coil clearing switch. | | 12 ac/dc<br>24 ac/dc | 60<br>168 | 1042 |
| | | | 120 Vac<br>208 Vac<br>240 Vac | 72<br>228<br>288 | 1021 |
| | | | 277 Vac | 416 | 1082 |
| Auxiliary Switch “A” Contact | Ciircuit breaker open. | One contact only, opens when circuit breaker is off or tripped. 5 A max. at 120 Vac, 50/60 Hz. | | | 1200 |
| Auxiliary Switch “B” Contact | Ciircuit breaker open. | One contact only, closed when circuit breaker is off or tripped. 5 A max. at 120 Vac, 50/60 Hz. | | | 1201 |
| Alarm Switch | Circuit breaker tripped.<br><br>Circuit breaker open or closed. | One contact only, closed when circuit breaker is tripped. 5 A max. at 120 Vac, 50/50 Hz.<br><br>One contact only, open when circuit breaker is on or off. 5 A max. at 120 Vac, 50/50 Hz. | | | 2100 |


© 1998 Square D All Rights Reserved

### Shunt Trip

The shunt trip accessory is used to trip the circuit breaker from a remote location by using a trip coil energized from a separate circuit. When energized by a push button or other pilot device, the shunt trip causes the circuit breaker to trip. The handle moves to the tripped position and the VISI-TRIP indicator appears. The trip coil has a coil clearing contact to break the coil circuit when the circuit breaker trips.

Shunt trips are available for QO and QOB circuit breakers only (not for miniature switches, QO-GFCI products or QO-EPD products) with standard control voltage ratings up to 277 Vac or 24 Vdc. A 120 Vac shunt trip operates at 55% or more of rated voltage and all other shunt trips operate at 75% or more of rated voltage. See the following wiring diagram.

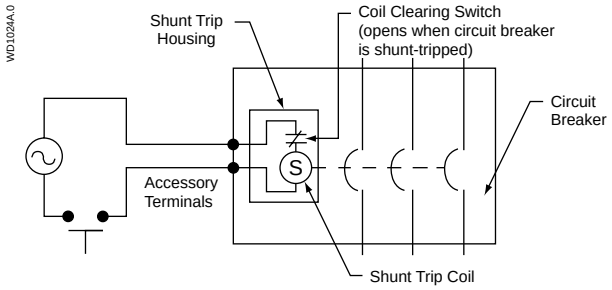


**Shunt Trip Wiring Diagram**

### Auxiliary Switch

The auxiliary switch accessory monitors the circuit breaker contact status and provides a remote signal indicating whether the circuit breaker contacts are open or closed. When the circuit breaker is off or tripped, the auxiliary switch with an "A" contact is open and the auxiliary switch with a "B" contact is closed. When the circuit breaker is on, the auxiliary switch with an "A" contact is closed and the auxiliary switch with a "B" contact is open.

Auxiliary switches are available for QO and QOB circuit breakers and miniature switches. See the following wiring diagrams.

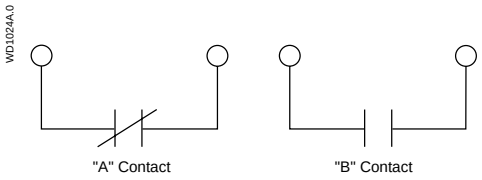


**Circuit Breaker ON**

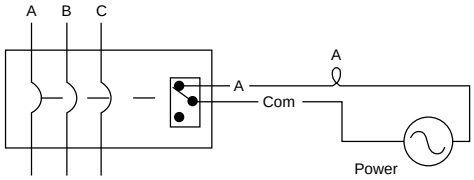


**Circuit Breaker ON—Light A "On"**

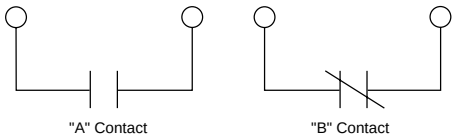


**Circuit Breaker OFF or Tripped**

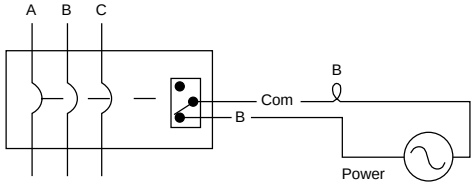


**Circuit Breaker OFF or Tripped—Light B "On"**


© 1998 Square D All Rights Reserved

### Alarm Switch

The alarm switch accessory monitors the circuit breaker trip status and is used to provide a remote warning signal indicating that the circuit breaker has tripped. This signal can be used in conjunction with a horn, pilot light or some other indicator.

The contact on the standard alarm switch is open when the circuit breaker is in the off or on position and is closed when the circuit breaker is in the tripped position.

Alarm switches are actuated when the circuit breaker has tripped as a result of an overload, short circuit or shunt trip operation.

Alarm switches are available for QO and QOB circuit breakers and miniature switches. See the wiring diagram below.

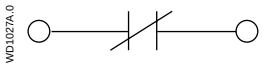


**Normally-open Alarm Switch Circuit Breaker Tripped**

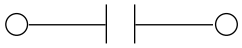

**Circuit Breaker OFF or ON**

### Field-installed Accessories

| Accessory | Description | Catalog Number |
|---|---|---|
| Handle Tie | Ties 2 one-pole circuit breakers together.<br>Ties 2 one-pole side-by-side QOT circuit breakers together.<br>Ties 3 one-pole circuit breakers together, includes lock-off for California Title 24. | QO1HT<br>QOTHT<br>QO3HT |
| Handle Lock-off (Clamp) | Attaches to one-pole circuit breaker handles.<br>Attaches to one-, two- or three-pole circuit breaker handles. | QO1LO<br>HLO1 |
| Handle Padlock Attachment | One-pole circuit breakers (all). Attaches to circuit breaker escutcheon–fixed.<br>One-pole QOT circuit breakers. Attaches to circuit breaker escutcheon–fixed.<br>Two-pole and three-pole circuit breakers (except GFI, EPD, AFI). Attaches to circuit breaker escutcheon–fixed.<br>One-pole circuit breakers (except GFI, EPD, AFI). Attaches to circuit breaker handle–removable.<br>Two-pole and three-pole circuit breakers (except GFI, EPD, AFI). Attaches to circuit breaker handle–removable.<br>Two-pole QO-GFI, QO-EPD, QO-AFI only. | QO1PA<br>QOTHPA<br>QO1PL<br>QOHPL<br>QO1HPL<br>GFI2PA |
| Mechanical Interlock | Interlocks 2 two-pole or 1 two-pole and 1 one-pole QO circuit breakers. | QO2DTI |
| Mechanical Interlock with Retaining Kit | For interlocking two adjacent back-fed circuit breakers in dual power supply applications. Interlocks 2 two-pole or 1 two-pole and 1 one-pole QO circuit breakers. | QO2DTIM |
| Rainproof Cover | Vertical cover for two-pole circuit breakers.<br>Horizontal cover for two-pole circuit breakers. | BCV<br>BCH |

### Handle Tie

The handle tie accessory converts any adjacent one-pole QO circuit breakers to one independent trip multi-pole circuit breaker.

### Handle Lock-off (Clamp)

The handle lock-off accessories fasten the handle in the on or off position. These handle lock-offs cannot be padlocked.

### Handle Padlock Attachment

The handle padlock attachment allows padlocking the circuit breaker handles in on or off position.

Handle padlock attachments are available in two styles: removable and fixed. The removable style is intended to be a temporary device. Once work on the circuit has been completed, the attachment can


© 1998 Square D All Rights Reserved

be removed for the circuit breaker to resume normal operation. The fixed style is intended to be a permanent device. Once the work on the circuit has been completed, the padlock can be removed for the circuit breaker to resume normal operation, but the attachment stays in place.

**Mechanical Interlock Attachment**

The mechanical interlock attachment locks the handles of two adjacent circuit breakers to prevent both circuit breakers from being on at the same time. Both circuit breakers may be switched to the off position with the mechanical interlock in place.

**Mechanical Interlock Attachment with Retaining Kit**

The mechanical interlock attachment locks the handles of two adjacent back-fed circuit breakers in dual power supply applications.




QO1HT
Handle Tie

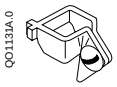


HLO-1 Handle
Lock-off (Clamp)




QO1LO Handle
Lock-off (Clamp)

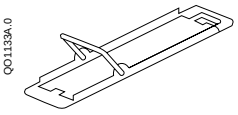


QO1PA Handle
Padlock Attachment

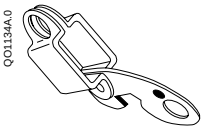


QO1HPL Handle
Padlock Attachment

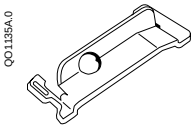


QP1PL Handle Padlock
Attachment

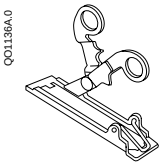


QOTHPA Handle
Padlock Attachment

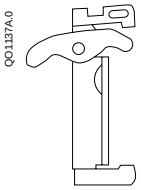


QO2DTI Mechanical Interlock
Attachment

## TRIP CURVES

The tripping characteristics of molded case circuit breakers can be represented by a characteristic tripping curve that plots tripping time versus current level. The curve shows the amount of time required for a circuit breaker to trip at a given overcurrent level. Manufacturing tolerances result in a curve that is a band bound by minimum and maximum values of total clearing time. Total clearing time is the sum of the sensing time, unlatching time, mechanical operating time and arcing time of the circuit breaker. For currents in excess of 135% of the circuit breaker rating at rated ambient temperature (40°C), the circuit breaker will automatically open the circuit within limits specified by the band.

**Thermal Tripping Characteristics**

The upper left portion of each trip curve displays the thermal response of the circuit breaker. On low-fault current levels, up to the magnetic tripping level, thermal tripping occurs when a bimetal in the circuit breaker responds to heat associated with the overcurrent. The bimetal deflects, unlatching the mechanism and mechanically causing the circuit breaker to trip and open the circuit. The larger the overload, the faster the circuit breaker will operate to clear the circuit.

**Magnetic Tripping Characteristics**

The lower right portion of each trip curve displays the magnetic tripping response of the circuit breaker. This takes place when overcurrents of sufficient magnitude operate an internal magnetic armature which unlatches the mechanism. Magnetic tripping occurs with no intentional time delay.


© 1998 Square D All Rights Reserved

# Trip Curves

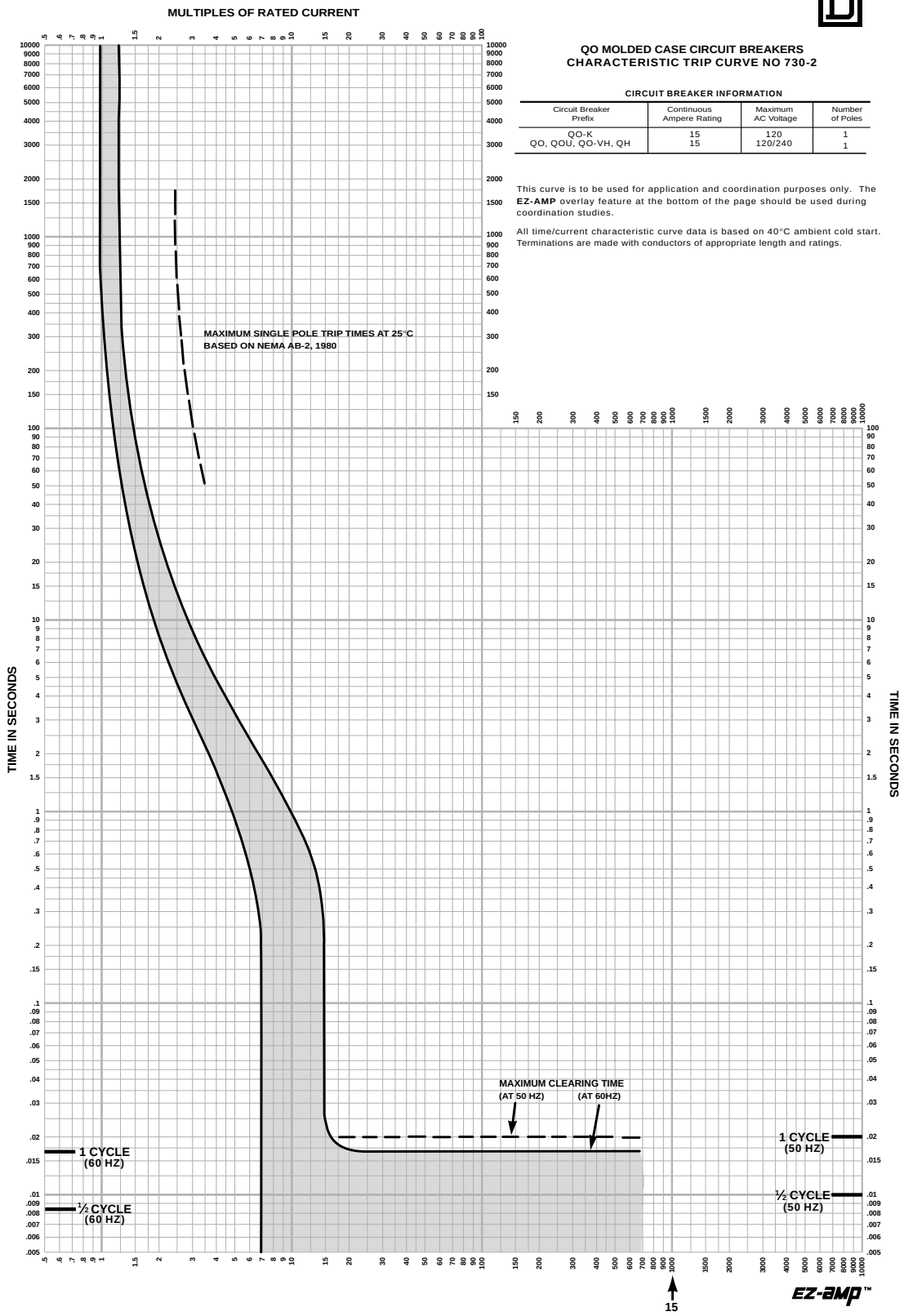


**QO MOLDED CASE CIRCUIT BREAKERS**
**CHARACTERISTIC TRIP CURVE NO 730-2**

**CIRCUIT BREAKER INFORMATION**

| Circuit Breaker Prefix | Continuous Ampere Rating | Maximum AC Voltage | Number of Poles |
|---|---|---|---|
| QO-K | 15 | 120 | 1 |
| QO, QOU, QO-VH, QH | 15 | 120/240 | 1 |

This curve is to be used for application and coordination purposes only. The **EZ-AMP** overlay feature at the bottom of the page should be used during coordination studies.

All time/current characteristic curve data is based on 40°C ambient cold start. Terminations are made with conductors of appropriate length and ratings.


© 1998 Square D All Rights Reserved

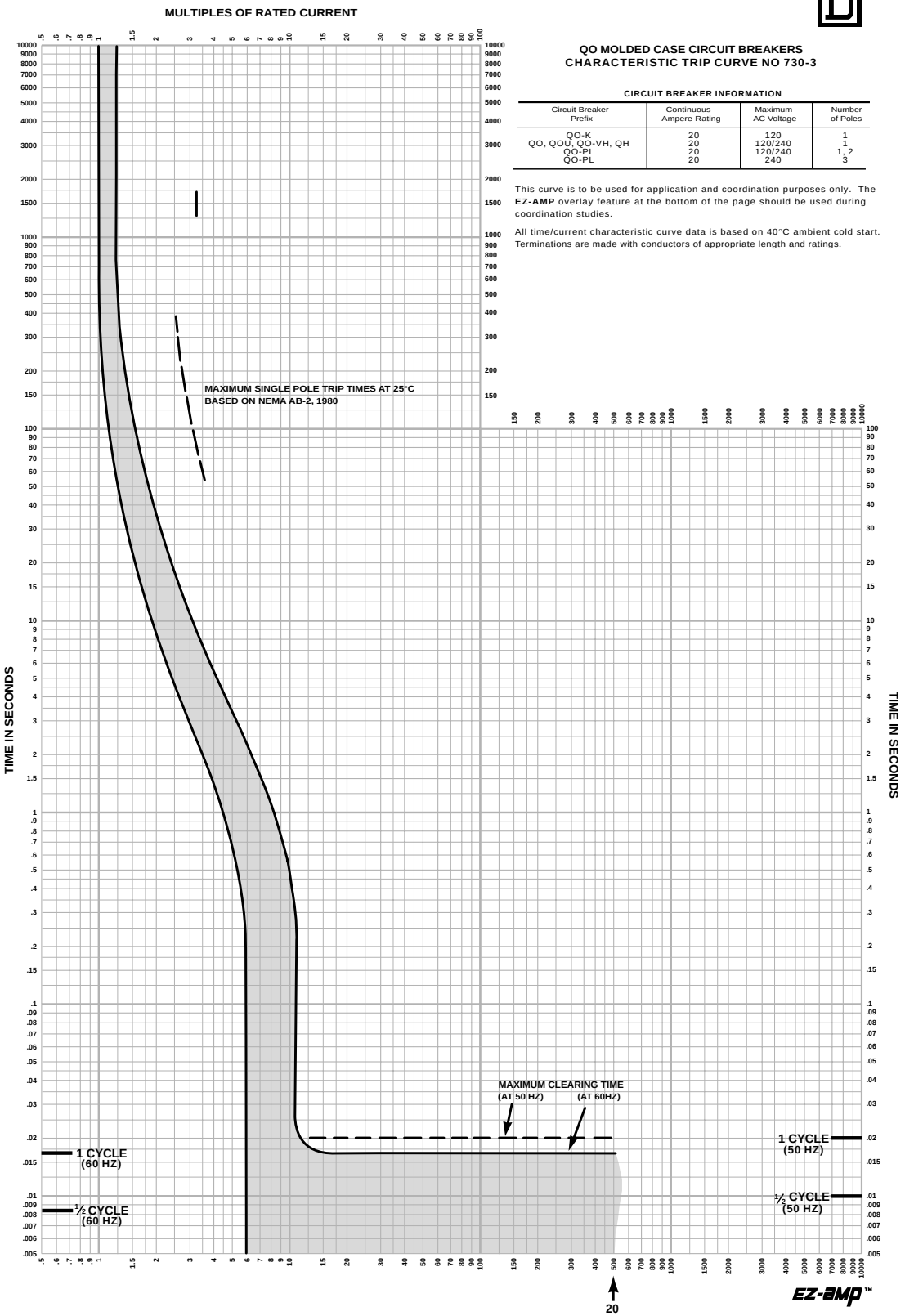


**QO MOLDED CASE CIRCUIT BREAKERS**
**CHARACTERISTIC TRIP CURVE NO 730-3**

**CIRCUIT BREAKER INFORMATION**

| Circuit Breaker Prefix | Continuous Ampere Rating | Maximum AC Voltage | Number of Poles |
|---|---|---|---|
| QO-K | 20 | 120 | 1 |
| QO, QOU, QO-VH, QH | 20 | 120/240 | 1 |
| QO-PL | 20 | 120/240 | 1, 2 |
| QO-PL | 20 | 240 | 3 |

This curve is to be used for application and coordination purposes only. The **EZ-AMP** overlay feature at the bottom of the page should be used during coordination studies.

All time/current characteristic curve data is based on 40°C ambient cold start. Terminations are made with conductors of appropriate length and ratings.

SQUARE D®

© 1995 Square D

**MULTIPLES OF RATED CURRENT**
Drawing No. B48095-730-03

June, 1995

Order No.0730TC8703R5/95
(Replaces 0730TC8703)



© 1998 Square D All Rights Reserved

# Trip Curves

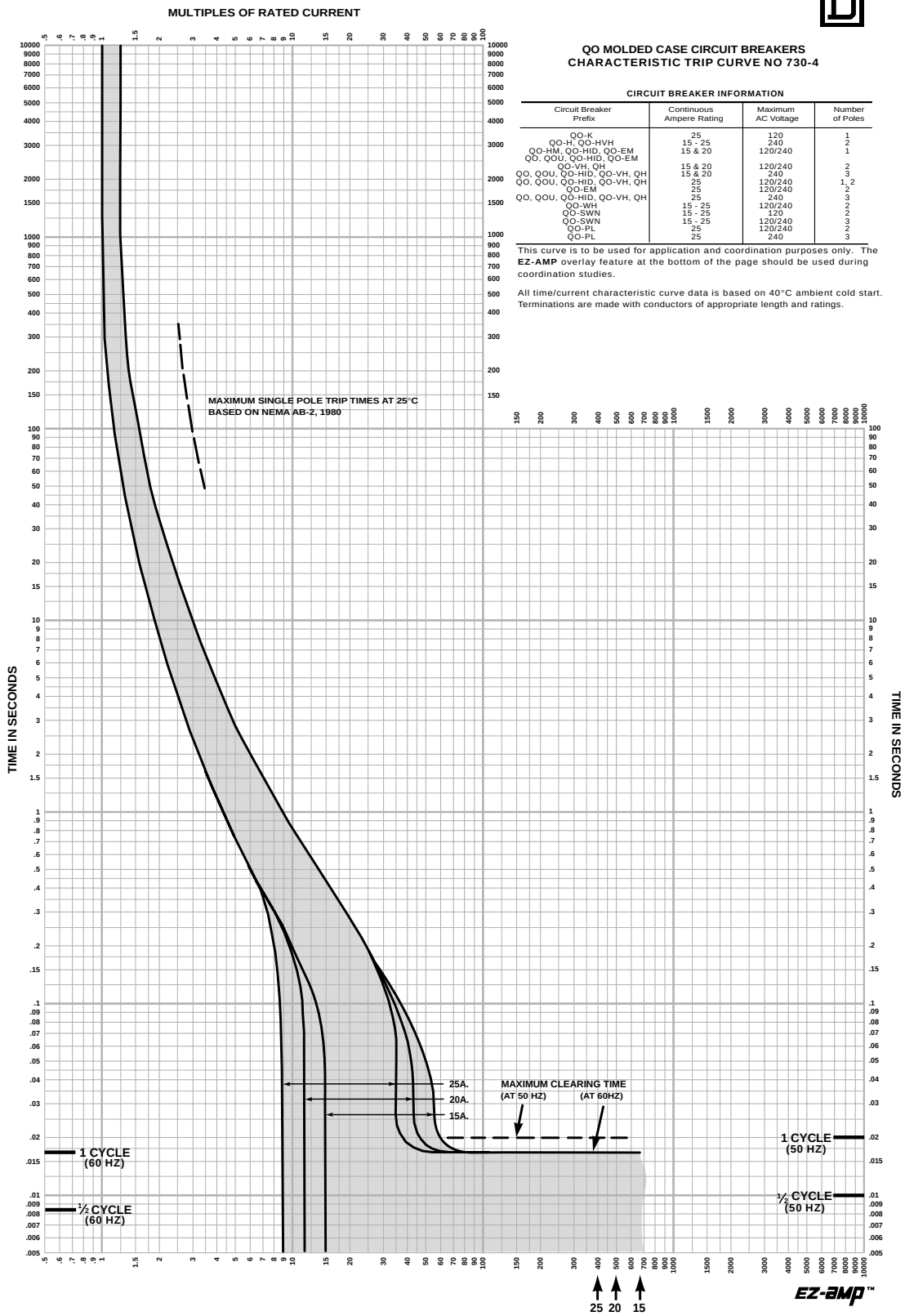


**QO MOLDED CASE CIRCUIT BREAKERS**
**CHARACTERISTIC TRIP CURVE NO 730-4**

**CIRCUIT BREAKER INFORMATION**

| Circuit Breaker Prefix | Continuous Ampere Rating | Maximum AC Voltage | Number of Poles |
|---|---|---|---|
| QO-K | 25 | 120 | 1 |
| QO-H, QO-HVH | 15 - 25 | 240 | 2 |
| QO-HM, QO-HID, QO-EM | 15 & 20 | 120/240 | 1 |
| QO, QOU, QO-HID, QO-EM | | | |
| QO-VH, QH | 15 & 20 | 120/240 | 2 |
| QO, QOU, QO-HID, QO-VH, QH | 15 & 20 | 240 | 3 |
| QO, QOU, QO-HID, QO-VH, QH | 25 | 120/240 | 1, 2 |
| QO-EM | 25 | 120/240 | 2 |
| QO, QOU, QO-HID, QO-VH, QH | 25 | 240 | 3 |
| QO-WH | 15 - 25 | 120/240 | 2 |
| QO-SWN | 15 - 25 | 120 | 2 |
| QO-SWN | 15 - 25 | 120/240 | 3 |
| QO-PL | 25 | 120/240 | 2 |
| QO-PL | 25 | 240 | 3 |

This curve is to be used for application and coordination purposes only. The **EZ-AMP** overlay feature at the bottom of the page should be used during coordination studies.

All time/current characteristic curve data is based on 40°C ambient cold start. Terminations are made with conductors of appropriate length and ratings.

SQUARE D®
© 1995 Square D

**MULTIPLES OF RATED CURRENT**
Drawing No. B48095-730-03

June, 1995

Order No.0730TC8704R5/95
(Replaces 0730TC8704)


© 1998 Square D All Rights Reserved

# Trip Curves

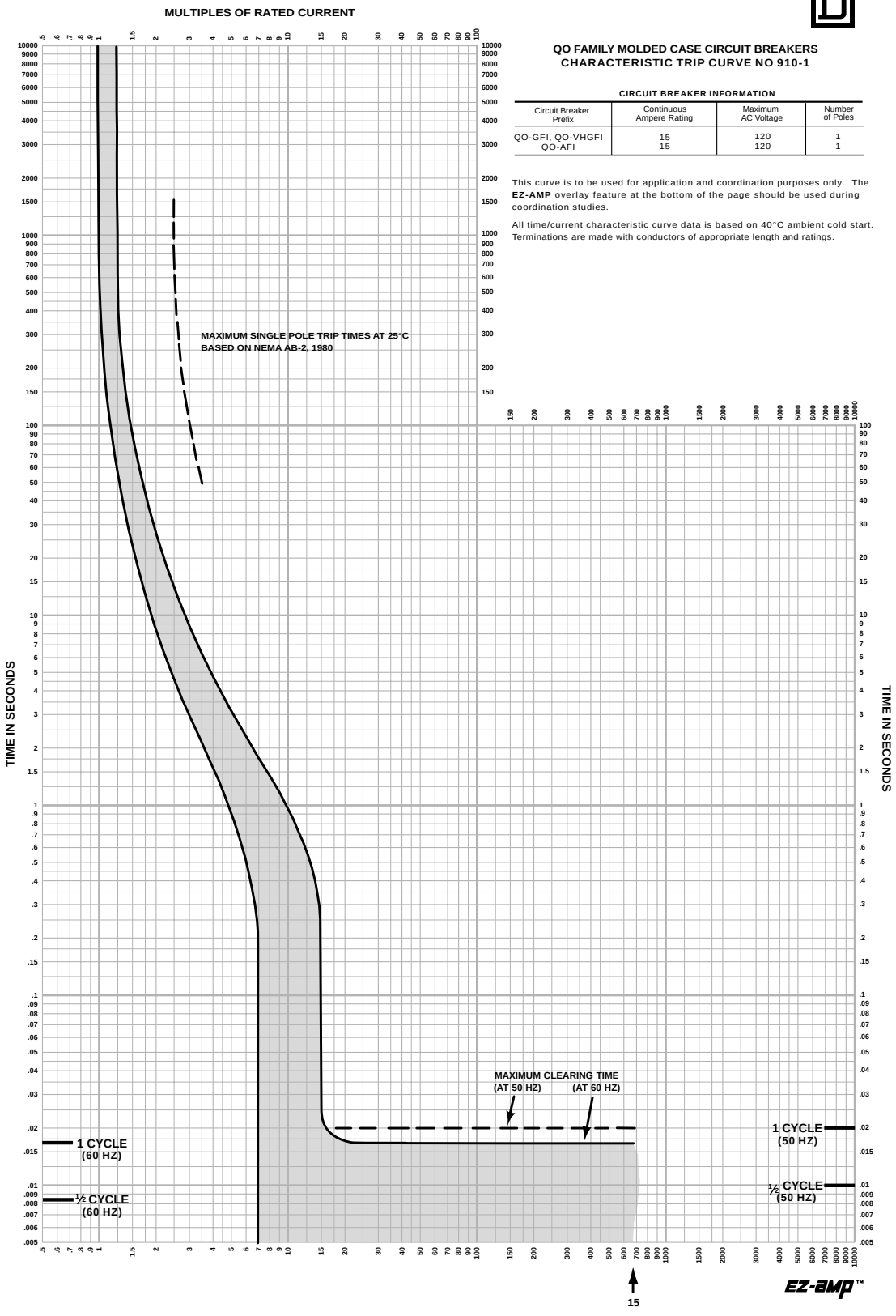


**QO FAMILY MOLDED CASE CIRCUIT BREAKERS**
**CHARACTERISTIC TRIP CURVE NO 910-1**

**CIRCUIT BREAKER INFORMATION**

| Circuit Breaker Prefix | Continuous Ampere Rating | Maximum AC Voltage | Number of Poles |
|---|---|---|---|
| QO-GFI, QO-VHGFI | 15 | 120 | 1 |
| QO-AFI | 15 | 120 | 1 |

This curve is to be used for application and coordination purposes only. The **EZ-AMP** overlay feature at the bottom of the page should be used during coordination studies.

All time/current characteristic curve data is based on 40°C ambient cold start. Terminations are made with conductors of appropriate length and ratings.

SQUARE D®

© 1985 Square D Company

Curve No. 0910TC8501
Drawing No. B48095-910-01



© 1998 Square D All Rights Reserved

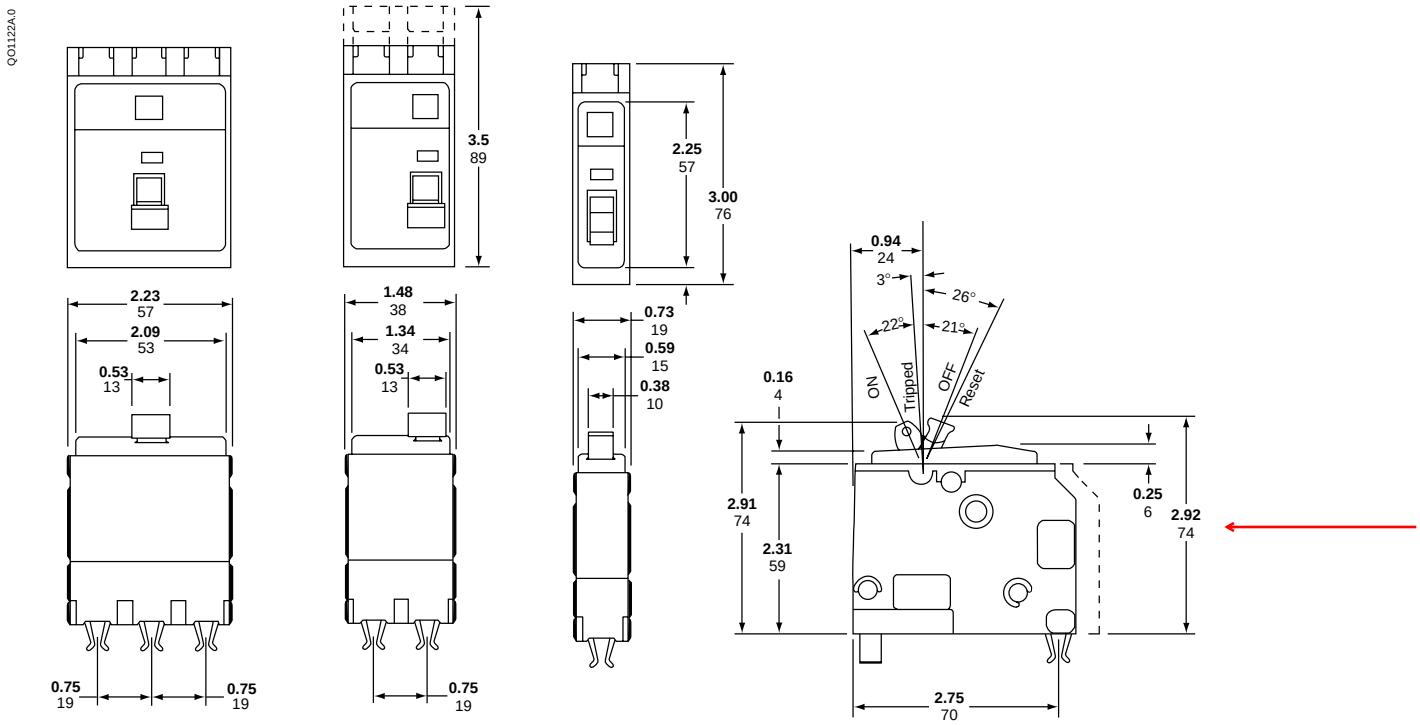


**Type QO Plug-on Circuit Breaker**

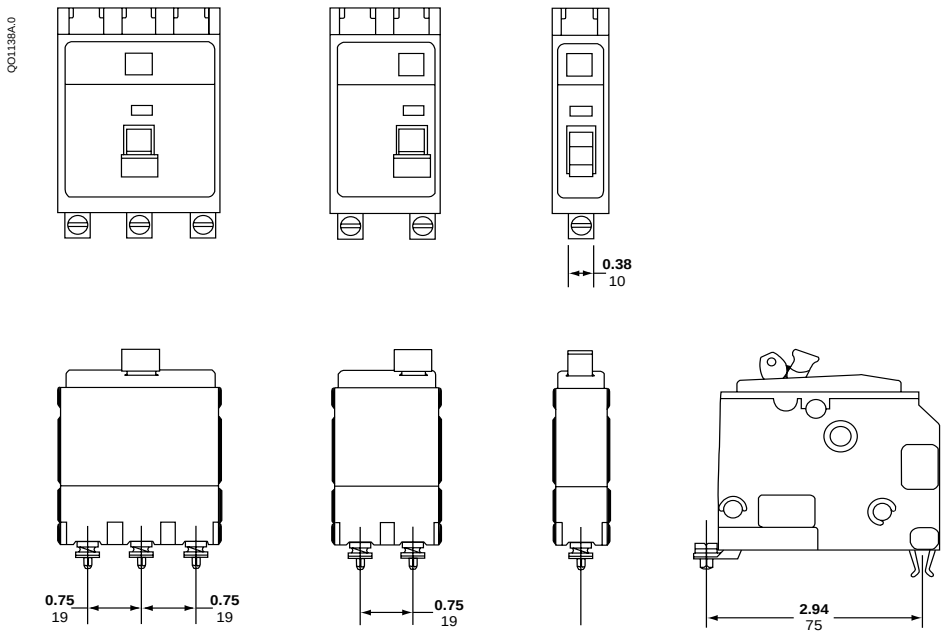


**Type QOB Bolt-on Circuit Breaker**

Dual Dimensions: **in.** mm


© 1998 Square D All Rights Reserved

## Dimensions

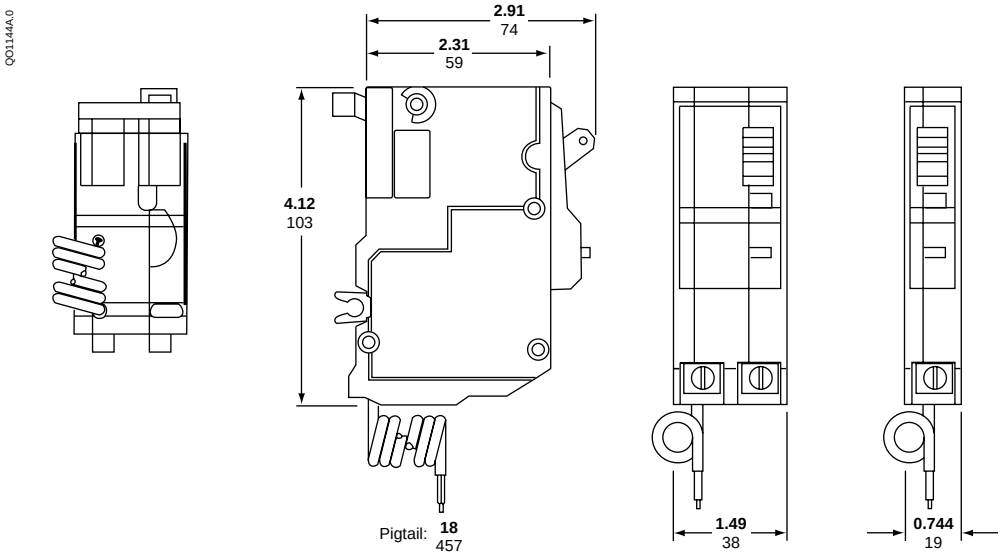


**Type QO-GFI Circuit Breaker**

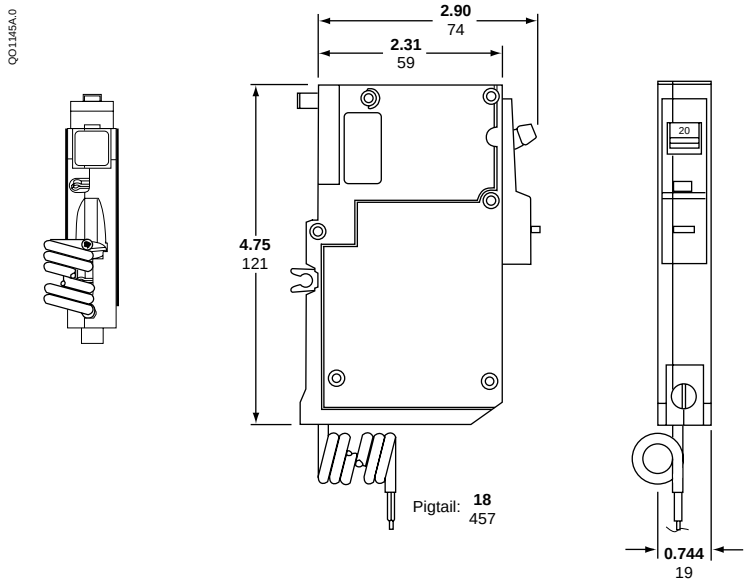


**Type QO-AFI Circuit Breaker**

Dual Dimensions: **in.** mm


© 1998 Square D All Rights Reserved

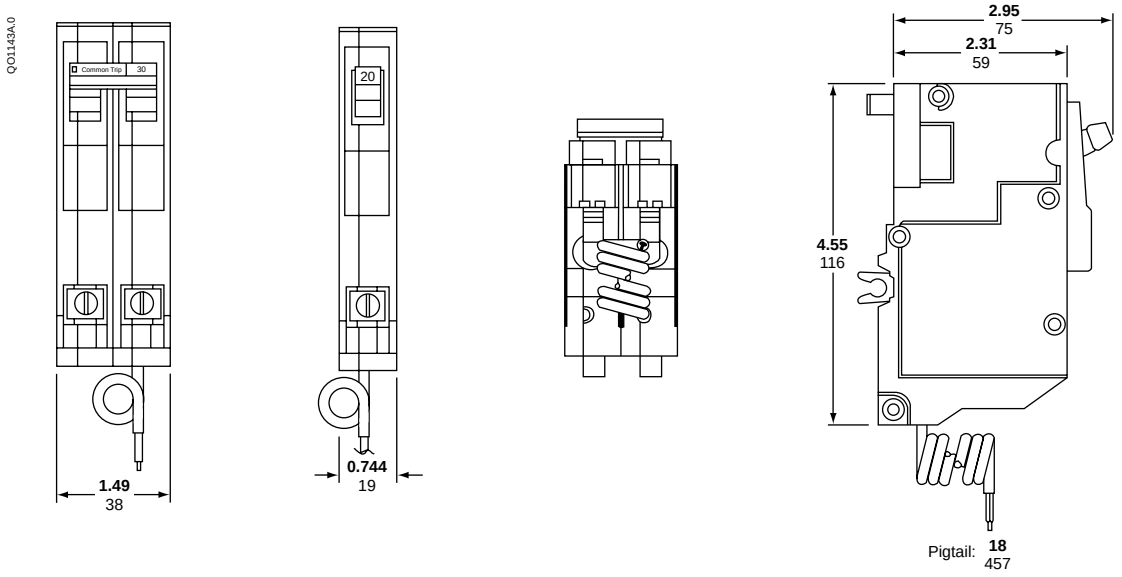


**Type QO-PL Remote Control Circuit Breaker**

Dual Dimensions: **in.** mm


© 1998 Square D All Rights Reserved

## GLOSSARY OF TERMS AND ACRONYMS

**accessory (device)** = an electrical or mechanical device that performs a secondary or minor function apart from overcurrent protection.

**AFCI (arc-fault current interrupter)** = a circuit interrupter that detects a wide range of arc-fault conditions.

**AIR (ampere interrupting rating)** = the highest current at rated voltage that an overcurrent protective device is intended to interrupt under specified test conditions (NEC).

**alarm switch (bell alarm)** = see overcurrent trip switch.

**ambient temperature rating** = temperature at which the continuous current rating (handle rating) of a circuit breaker is based; the temperature of the air immediately surrounding the circuit breaker which can affect the thermal (overload) tripping characteristics of thermal-magnetic circuit breakers.

**ampere rating** = see continuous current rating.

**auxiliary switch** = a switch mechanically operated by the main device for signaling, interlocking, or other purposes.

**bell alarm** = see overcurrent trip switch.

**branch circuit** = the circuit conductor between the final overcurrent device protecting the circuit and the outlet(s).

**circuit breaker** = a device designed to open and close a circuit by non-automatic means and to open the circuit automatically on an overcurrent without damage to itself when properly applied within its rating.

**coil clearing switch** = a mechanically-operated switch in series with the coil of a shunt trip device which breaks the coil current when the circuit breaker opens.

**continuous current rating (handle rating)** = the designated rms alternating current in amperes which a device or assembly will carry continuously in free air without tripping or exceeding temperature limits.

**continuous load** = a load where the maximum current on the circuit is expected to continue for more than 3 hours.

**CSA** = Canadian Standards Association.

**current path (of a circuit breaker**) = the current-carrying conductors within a circuit breaker between, and including, line and load terminations.

**current rating** = see continuous current rating.

**frequency** = the number of cycles per second for an alternating current system.

**frequency rating** = the range of frequencies within which a product can be applied.

**ground fault** = an unintentional current path, through ground, back to the source.

**handle rating** = continuous current rating.

**instantaneous pickup** = the current level at which the circuit breaker will trip with no intentional time delay.

**integral ground-fault protection** = equipment ground-fault protection on grounded neutral systems provided by components internal to the circuit breaker.

**interrupting rating** = the highest current at rated voltage available at the incoming terminals of the circuit breaker. When the circuit breaker can be used at more than one voltage, the interrupting rating will be shown on the circuit breaker for each voltage level. The interrupting rating of a circuit breaker must be equal to or greater than the available short-circuit current at the point at which the circuit breaker is applied to the system.

**inverse time** = a qualifying term indicating there is purposely introduced a delay in the tripping action of the circuit breaker, which delay decreases as the magnitude of the current increases.


© 1998 Square D All Rights Reserved

**molded case circuit breaker** = a circuit breaker which is assembled as an integral unit in a supportive and enclosed housing of insulating material.

**molded case switch** = a device designed to open and close a circuit by non-automatic means that is not intended to provide overcurrent protection.

**NEMA** = National Electrical Manufacturer's Association.

**NOM/ANCE** = Mexican certification authority.

**OTS** = overcurrent trip switch (alarm switch, bell alarm).

**overcurrent** = any current in excess of the rated continuous current of equipment or the ampacity of a conductor.

**overcurrent trip element** = a device which detects an overcurrent and transmits the energy necessary to open the circuit automatically.

**overcurrent trip switch** = a mechanically-operated switch which indicates when a circuit breaker has tripped due to overcurrent conditions.

**rms** = root-mean-square.

**shunt trip** = an accessory which trips the circuit breaker from a remote location using an external voltage source.

**thermal-magnetic circuit breaker** = a general purpose term for circuit breakers that use bimetals and electromagnetic assemblies to provide both thermal and magnetic overcurrent protection.

**UL** = Underwriters Laboratories Inc.


© 1998 Square D All Rights Reserved

# Cut Sheet 6

# Service Entrance Suppressor(B), 160 kA

CONNECT AND PROTECT




The nVent ERICO SES160B Series of Surge Protective Devices (SPD) provide economical protection against damaging transients and surge currents. cUL® 1449 Listed SPD for Type 1 or Type 2 locations. Allows for installation on the line or load of the service panels, circuit breakers not required. With a 160 kA per phase surge rating, the SES160B is well suited for category C locations. Applications include service entrance, distribution, branch panels, MMC, lighting panels, HVAC, and more. With a NEMA® 4X enclosure rating this product series is also well suited for outdoor applications.

## FEATURES

- 160 kA 8/20 µs maximum surge rating per phase
- Excellent clamping, low UL voltage protection ratings
- Relay alarming for power/phase loss and surge protection device health
- Compact design can be directly mounted to panel or installed in a small space
- Optional Flush Mounting Plate

| Part Number | SES160B120/240SP | SES160B120V | SES160B208Y | SES160B240D | SES160B240V | SES160B480D | SES160B480Y |
|---|---|---|---|---|---|---|---|
| Nominal System Voltage (Un) | 120/240 V | 120 V | 120/208 V | 240 V | 240 V | 480 V | 277/480 V |
| Distribution System | 1Ph 3W+G | 1Ph 2W+G | 3Ph Y 4W+G | 3PhΔ 3W+G | 1Ph 2W+G | 3PhΔ 3W+G | 3Ph Y 4W+G |
| Max Continuous Operating Voltage (Uc) | 180/360 V | 180 V | 150/300 V | 275 V | 350 V | 550 V | 350/700 V |
| Frequency | 0 – 600 Hz | | | | | | |
| Short Circuit Current Rating (SCCR) | 200 kA | | | | | | |
| Nominal Discharge Current (In), Per Mode | 20 kA 8/20 µs | | | | | | |
| Max Discharge Current (Imax), Per Phase | 160 kA 8/20 µs | | | | | | |
| Voltage Protection Rating (VPR), L-L | 1,200 V | – | 1,000 V | 1,500 V | – | 3,000 V | 2,000 V |
| Voltage Protection Rating (VPR), L-N | 700 V | 700 V | 600 V | – | 1,200 V | – | 1,200 V |
| Voltage Protection Rating (VPR), L-PE | 700 V | 700 V | 700 V | 900 V | 1,000 V | 1,500 V | 1,000 V |

| Part Number | SES160B120/240SP | SES160B120V | SES160B208Y | SES160B240D | SES160B240V | SES160B480D | SES160B480Y |
|---|---|---|---|---|---|---|---|
| Voltage Protection Rating (VPR), N-PE | 600 V | 600 V | 500 V | – | 1,000 V | – | 1,000 V |
| Protection Modes | All modes protected | | | | | | |
| Status Indication | 1 green LED per line; Audible alarm | | | | | | |
| Remote Contact Switching Capacity | 2.0 A @ 240 V | | | | | | |
| Remote Contacts | Yes | | | | | | |
| Lead Length | 18" | | | | | | |
| Lead Size | #12 | | | | | | |
| Temperature | –40 to 185°F | | | | | | |
| Enclosure Material | Polycarbonate | | | | | | |
| Enclosure Rating | NEMA®-4X; UL® 50E Type 4 | | | | | | |
| Mounting | 3/4" straight nipple | | | | | | |
| Unit Weight | 1.16 lb | | | | | | |
| Certification Details | CSA C22.2 No. 269.1; UL® 1449 Edition 5 Type 1/2, 20 kA Mode | | | | | | |
| Complies With | ANSI®/IEEE® C62.41.2-2002 Cat A, Cat B, Cat C ANSI®/IEEE® C62.41.1-2002 Cat A, Cat B, Cat C ANSI®/IEEE® C62.45-2002 Cat A, Cat B, Cat C | | | | | | |
| Depth | 2.93" | | | | | | |
| Height | 4.2" | | | | | | |
| Width | 3 1/4" | | | | | | |

Maximum Clamp Voltage: Equivalent to Max Continuous Operating Voltage Line to Line = 360V
Peak Current: Equivalent to Nominal Discharge Current Per Mode = 20kA
Response Time: <5 nanoseconds
Occurrences: 20 times at Nominal Discharge Current
Minimum Series Inductance: 200 microhenries
Temperature Range: -40 – 185 F



©2021 nVent. All nVent marks and logos are owned or licensed by nVent Services GmbH or its affiliates. All other trademarks are the property of their respective owners.
nVent reserves the right to change specifications without notice.

# Cut Sheet 7

# **24V POWER SUPPLY** DATA SHEET



## KEY FEATURES

- Universal input voltage range (85–305 VAC)
- Active Power Factor Correction (PFC)
- Low earth leakage current
- Input inrush current limiting (<30 Amp)
- Single 24 VDC output voltage with dual outputs
- 500 W total rated output power
- High efficiency (94% from 50% to 100%)
- Over temperature, OV, OC and SC protections
- Wide temperature operating range (-40 – 70° C)
- Sealed enclosure, IP65 and IP67 Ingress Protection grade
- Safety certification to UL/IEC/EN 62368-1
- Specifically designed with Daktronics for LED message signs and manufactured by approved supplier (Daktronics part number A-4985215)

| DIMENSIONS | WEIGHT |
|---|---|
| 11.724" H x 4" W x 2" D<br>(297.8 mm x 101.5 mm x 50.8 mm) | 3.9 lb<br>(1.77 kg) |

## INPUT SPECIFICATIONS

| SPECIFICATION | TEST CONDITIONS/NOTES | MIN. | NOMINAL | MAX. | UNITS |
|---|---|---|---|---|---|
| **AC Input Voltage** | PS starts and operates at 85 VAC at all load conditions | 85 | 100–277 | 305 | $V_{RMS}$ |
| **Input Frequency** | | 47 | 50/60 | 63 | Hz |
| **Input Current** | 115 VAC: 5 A<br>230 VAC: 2.5 A<br>277 VAC: 2.1 A | - | - | 5.0 | A |
| **Inrush Current** | Cold start, 25° C ambient, full load<br>115 VAC<br>230 VAC | -<br>- | -<br>- | 20<br>30 | A |
| **Fusing** | 10 A, 500 VAC, Time-delay fuse on both Line and Neutral | - | - | 10 | A |
| **Efficiency** | At 115 VAC, 100% rated load<br>At 230/277 VAC, 100% rated load | 85<br>90 | -<br>- | 92<br>94 | % |
| **Power Factor** | From 50–100% of rated load, 277, 230, 115 VAC, 50/60 Hz input voltages | 0.90 | - | - | - |
| **iTHD** | From 50–100% rated load, 115, 230, 277 VAC 50/60 Hz | - | - | 20 | % |
| **Harmonic Current** | Complies with EN 61000-3-2 at 230 VAC, 50/60 Hz, Class A<br>Complies with EN 61000-3-2 Class C, D at 230 VAC, 50/60 Hz, >150 W load | | | | |
| **Fluctuations and Flicker** | Complies with EN 61000-3-3 at nominal voltages and full load | | | | |
| **Earth Leakage Current** | Normal conditions, 277 VAC, 60 Hz (worst case) | - | - | 490 | µA |

## OUTPUT SPECIFICATIONS

| SPECIFICATION | TEST CONDITIONS/NOTES | MIN. | NOMINAL | MAX. | UNITS |
|---|---|---|---|---|---|
| **Output Voltage** | ±5% set point accuracy at 20% load | - | 24 | - | V |
| **Total Power Rating** | Convection cooling (Maximum of 300 W per whip) | - | - | 500 | W |
| **Rated Current per whip** | | 0 | - | 12.5 | A |
| **Line Regulation** | VAC: 85–305 $V_{RMS}$ | - | - | ±0.1 | %Vo |
| **Ripple and Noise** | Rated load, Peak-to-peak, 20 MHz BW | - | - | 1 | %Vo |

## PROTECTION FEATURES

| SPECIFICATION | TEST CONDITIONS/NOTES | MIN. | NOMINAL | MAX. | UNITS |
|---|---|---|---|---|---|
| (All Protections will cause both outputs to shut down) | | | | | |
| **Over Current** | Hiccup mode, auto-recovering | 108 | - | 132 | %I Rated |
| **Short Circuit** | Hiccup mode, auto-recovering in 4 s typical | - | - | - | |
| **Over Voltage** | Power shut down, latch off | 120 | - | 145 | % |
| **Over Temperature (primary stage)** | Shut down, latch off. | - | 135 | - | °C |
| **Over Temperature (secondary stage)** | Hiccup mode, auto-recovering. | - | 70 | - | °C |
| **Isolation: Primary-to-Secondary** | Reinforced | - | 5000 | - | VDC |
| **Isolation: Input-to-Earth** | Basic | - | 2500 | - | VDC |

## ENVIRONMENTAL SPECIFICATIONS

| SPECIFICATION | TEST CONDITIONS/NOTES | MIN. | NOMINAL | MAX. | UNITS |
|---|---|---|---|---|---|
| **Operating Temperature Range** | Power supply does start up at -40° C<br>No de-rating up to 50° C, at ≥ 120 VAC | -40 | - | 70 | °C |
| **Storage Temperature** | | -40 | - | 85 | °C |
| **Humidity** | RH, condensing, operating<br>RH, non-operating | 0<br>0 | -<br>- | 100<br>100 | %<br>% |
| **Operating Altitude** | | - | - | 5000 | m |
| **Shock** | **EN 60068-2-27**<br>Operating: Half sine, 30 g, 18 ms, 3 axes, 6 shocks total (3 positive and 3 negative) | | | | |
| **Vibration** | **EN 60068-2-64**<br>Operating: Sine,10–500 Hz, 1 g, 3 axes, 1 oct/min., 60 min. | | | | |
| **MTBF** | Full Load, 40° C ambient<br>100% Duty cycle, Telcordia SR-332 | - | 500K | - | Hours |
| **Useful Life** | 120 VAC, 50% load (240 W),<br>60° C ambient temperature | - | 10 | - | Years |

## ELECTROMAGNETIC COMPATIBILITY (EMC) – EMISSIONS

| TYPE | CONDITIONS/NOTES | STANDARD | EQUIPMENT/ PERFORMANCE CLASS |
|---|---|---|---|
| **Conducted** | 115, 230, 277 $V_{RMS}$ At maximum load | EN 55032 (ITE)<br>FCC Part 15 | B |
| **Radiated** | | EN 55032 (ITE)<br>FCC Part 15 | B |
| **Line Voltage Fluctuation and Flicker** | At 20%, 50% and 100% maximum load<br>Nominal input voltages | EN 61000-3-3 | |
| **Harmonic Current Emission** | 230 VAC input voltage, 50/60 Hz<br>230 VAC 50/60 Hz, >150 W load | EN 61000-3-2<br>EN 61000-3-2 | A,<br>C, D |



201 Daktronics Drive, PO Box 5128, Brookings, SD 57006
Phone: 1-800-325-8766 or 605-692-0200 Fax: 605-697-4746


DAKTRONICS

## ELECTROMAGNETIC COMPATIBILITY (EMC) – IMMUNITY

| TYPE | CONDITIONS/NOTES | STANDARD |
|---|---|---|
| **ESD** | 15 kV air discharge, 8 kV contact, at any point of the system | EN 61000-4-2 |
| **Radiated Field** | 10 V/m, 80–1000 MHz, 1 KHz, 80% AM | EN 61000-4-3 |
| **Electric Fast Transient** | ±2 kV on AC power port | EN 61000-4-4 |
| **Surge** | ±1 kV line to line; ± 2 kV line to earth on AC power port | EN 61000-4-5 |
| **Conducted RF Immunity** | 10 $V_{RMS}$ | EN 61000-4-6 |
| **Dips and Interruptions** | **100–127 VAC:**<br>0% Vin for 10 ms<br>40% Vin for 200 ms<br>70% Vin for 500 ms<br>0% for 5 s | <br>EN61000-4-11<br>EN61000-4-11<br>EN61000-4-11<br>EN61000-4-11 |

## SAFETY AGENCIES APPROVALS

| TYPE | SAFETY STANDARDS AND FILE NUMBERS | CATEGORY |
|---|---|---|
| **UL/CSA** | UL/CSA 62368-1 3rd Edition | Audio/video, information, and communication technology equipment |
| **CB Certification** | IEC/EN 62368-1 | Audio/video, information, and communication technology equipment |
| **CE** | Directive 2014/35/EU: Electrical Safety: Low Voltage electrical equipment (LVD);<br>Directive 2014/30/EU: Electromagnetic Compatibility (EMC);<br>Directive EU 2015/863 (RoHS 3) | |



Consistent with Daktronics policy of continuing product improvement,
specifications shown on this document are subject to change without notice.
DD5064984 032823 Rev 00 Page 4 of 4 Copyright © 2023 Daktronics, Inc.

DAKTRONICS

# Cut Sheet 8

# VANGUARD® DMS AUXILIARY CONTROL PANEL FOR VFC

## OVERVIEW

The Vanguard DMS Auxiliary Control Panel compliments the VFC DMS controller by providing a secondary control interface panel at the DMS site. The small Panel can be located in the DMS, in a pole-mounted enclosure or in a ground-mounted traffic cabinet. When the VFC controller is located on the ground, a maintenance technician can use the Auxiliary Control Panel to perform diagnostics while working in the sign, or vice versa. That flexibility improves safety and reduces maintenance time by reducing trips between the ground and the sign.

The Auxiliary Control Panel provides identical functionality as the front panel of the VFC Controller. It connects to a VCB within the sign from distances of up to 1,640 feet to enable an operator to control, configure, or monitor the DMS and its subsystems.

The LCD and keypad on the Auxiliary Control Panel provide an interactive and easy-to-use menu system. The menu screens can be used to view the current status of the DMS systems, activate messages, blank the DMS, perform diagnostic tests and more. The high-contrast full-color LCD panel is backlit and can be easily used in both full sunlight and dark conditions.

Indicators are provided for power, heartbeat, communication status and local/remote mode. A laptop computer can be easily connected to the panel's NTCIP-compatible RS232 port for advanced diagnostics or control.

See DD2508962 for more details about the VFC controller.




## HIGHLIGHTS

### GENERAL

- Duplicates front panel interface of VFC Sign Controller
- NTCIP-compliant communication port
- Interactive front panel menu system
- Wide operating temperature range

### FLEXIBLE

- Provides a second on-site DMS control panel
- Can be installed inside DMS, on a pole-mounted enclosure, or in a ground-mounted traffic cabinet
- Compatible with Vanguard DMS

### MAINTENANCE FRIENDLY

- Graphical LCD full-color screen and keypad
- Backlit high-contrast LCD visible in all conditions
- Keypad and switches operable while wearing gloves
- Real-time sign monitor
- Monitor and diagnose all electronic subsystems
- Power, communication, heartbeat and local/remote mode indicators
- Switches for power and controller reset
- RS232 communication port for advanced diagnostics and control

DAKTRONICS®

# VANGUARD® DMS AUXILIARY CONTROL PANEL

FOR VFC

## FEATURES

### GENERAL

- Duplicates front panel interface of VFC Sign Controller
- Supports all Daktronics Vanguard VF and VX-series DMS
- Controls amber and full-color displays

### FRONT CONTROL PANEL AND INDICATORS

- Full-matrix LCD (280x472) with graphic capabilities
- 16 button membrane keypad
- Easy to use interactive menu system on LCD/keypad
- Start and stop messages from front panel menu
- Power, heartbeat and communication LED indicators

### DIAGNOSTICS AND MAINTENANCE

- Monitor and diagnose all systems from front panel menu
- Real-time diagnostics for pixels, power systems, fans and other systems
- Monitors temperature, light, door and in-sign sensors
- Real-time what-you-see-is-what-you-get (WYSIWYG) message monitor

### LAPTOP CONTROL PORT

- NTCIP-compliant
- Supports NTCIP communication for advanced diagnostics or control with a laptop
- Integrated RS232 serial port (DB-9 connector)

## PHYSICAL CHARACTERISTICS

### DIMENSIONS AND WEIGHT

- Height: 6.7" (171 mm)
- Width: 9.4" (238 mm)
- Depth: 3.5" (90 mm)
- Weight: 3.5 lbs (1.6 kg)

### ENVIRONMENT AND POWER

- NEMA TS 4 - compliant and tested
- Operating Temperature Range: -34° F to +165° F (-37° C to +74° C)
- Power Source: 120 VAC @ 60 Hz
- Max. Power Consumption: 10 W



Central Controller located at Traffic Management Center



VFC accessible inside the DMS or from the ground



Auxiliary Control Panel accessible from the ground or inside the DMS



Portable Maintenance Computer provides optional NTCIP communication

117 Prince Drive PO Box 5120 Brookings, SD 57006
tel 800-833-3157 605-692-0200 x57060 fax 605-697-4700
www.daktronics.com/its email transportation@daktronics.com
Copyright © 2015 Daktronics DD3122447 Rev05 082015

DAKTRONICS

# Cut Sheet 9

# VANGUARD® VFC CONTROLLER

## OVERVIEW

Daktronics offers the most powerful and easy-to-use dynamic message sign (DMS) controllers in the ITS industry. One of our strengths has always been developing feature-rich, high-performance sign controllers at a reasonable price. Daktronics controllers set the standard for quality, features and maintainability.
The VFC is a state-of-the-art DMS controller that simplifies system installation, operation and maintenance. It includes integrated peripherals, like communication devices, a front panel with keypad and full-color LCD. Built-in Ethernet ports allow for straightforward network access. The interactive front panel eliminates the use of a laptop in most cases.

The menu provides access to the current status of the DMS systems and can create, activate or delete messages, blank the DMS and perform diagnostic tests. The high-contrast full-color backlit LCD panel can be used day or night and provides an accurate visual representation of DMS messages. Configuration can be backed up and restored from a USB thumb drive.

The controller includes an LED power indicator and menus for status information, local/remote mode selection and reset options. Serial ports allow for NTCIP control through a laptop.

The VFC controls Vanguard DMS models, regardless of model, size or color capability. This interchangeability reduces spare parts and simplifies maintenance.

The VFC is capable of independently controlling up to 8 DMS in a single location. Multiple sign control adds flexibility when cabinet space is at a premium. Display signal fiber is connected with a redundant signal path for high reliability and performance.

The compact dimensions of the VFC provide multiple space-saving mounting options. One 2RU space can contain a controller with a communication shelf, a controller with fiber termination block or side-by-side controller installation.




## HIGHLIGHTS

### GENERAL

- NTCIP-compliant and tested
- NEMA TS 4-compliant and tested
- Interactive front panel menu system
- Mounts side-by-side in standard 19-inch rack (2RU)

### RELIABLE

- NEMA TS 4 operating temperature range (-34°C to 74°C)
- Surge protection for communication signals and power
- Redundant fiber-optic signal path provides reliability and eliminates electromagnetic interference

### MAINTENANCE FRIENDLY

- Backlit high-contrast full-color LCD
- Backup/restore configuration from USB thumb drive
- Real-time sign monitor
- Monitor and diagnose component subsystems
- Power, communication, heartbeat and local/remote mode indicators
- Compact and lightweight

### INTEGRATED COMMUNICATIONS

- 2 Ethernet ports
- 3 integrated serial ports

DAKTRONICS

# VANGUARD® VFC CONTROLLER

## FEATURES

### GENERAL

- Controls amber and full-color DMS
- Compatible with Daktronics auxiliary control panel
- Multiple sign control for up to 8 DMS

### DIAGNOSTICS AND MAINTENANCE

- Monitor and diagnose all systems from menu
- Real-time diagnostics for pixels, power systems, fans and other systems
- Monitor temperature, light, door and other in-sign sensors
- Integrated watch-dog circuit
- Real-time message monitor in WYSIWYG format
- Backup/restore configuration from USB thumb drive

### FRONT CONTROL PANEL AND INDICATORS

- LCD Panel
  - Full-matrix (480x272) with graphic capability
  - High-contrast full-color LCD with backlight
- 16 button membrane keypad
- Interactive menu system on LCD/keypad
- Local/remote control selector built into LCD interface
- Illuminated power switch - LED indicator



### MESSAGING

- Create, preview, activate or delete messages from menu
- Capable of any combination of text and graphics
- Stores up to 500 changeable messages
- Stores up to 31 changeable fonts
- Supports scheduling defined in NTCIP
- Full support for these NTCIP Tags:
  - Page Justification (top, middle, bottom)
  - Line Justification (left, middle, right, full)
  - New lines and new pages (6 page max)
  - Page On and Off Times
  - Font Tag
  - Graphics Tag
  - Color foreground and background
  - Color rectangles
  - Page background
  - Text rectanglesAll data fields (date, time, etc)
  - Spacing character
  - Flashing text
  - Scrolling text
  - Hexadecimal character

### COMMUNICATION INTERFACE

- NTCIP-compliant communication ports
- Supports dial-up modem, cellular modem, direct serial, fiber optic, radio and other communication networks
- Integrated 10/100Base-T Ethernet port (RJ-45)
- Integrated 10/100Base-T Ethernet auxiliary port (RJ-45)
- 3 integrated RS232 serial ports (DB-9)
- All ports protected from electromagnetic transients

### CONTROLLER-TO-SIGN INTERFACE

- Multi-mode fiber optic cable
- 50/125 µm fiber with LC connectors
- 850 nm wavelength
- Maximum distance: 1640' (500 m)

## PHYSICAL CHARACTERISTICS

### DIMENSIONS (HxWxD) AND WEIGHT

- 3.4375" x 8.75" x 14.0625" (88 mm x 222 mm x 357 mm)
- Weight: 11.0 lbs. (5 kg)

### ENVIRONMENT AND POWER

- NEMA TS 4-compliant and tested
- Operating Temperature Range:
  -30° F to +165° F (-34° C to +74° C)
- Power Source: 120 or 240 VAC @ 50 or 60 Hz
  o Auto-ranging power supply
- Max. Power Consumption: 30 W
- Power lines protected from electromagnetic transients

### NTCIP STANDARDS

- NTCIP 1101: Simple Trans. Mgmt. Framework (STMF)
- NTCIP 1102: Octet Encoding Rules
- NTCIP 1103: Transportation Mgmt. Protocols
- NTCIP 1201: Global Object Definitions
- NTCIP 1203: DMS Object Definitions
- NTCIP 2001: Class B Profile
- NTCIP 2101: PMPP/RS232 Subnetwork Profile
- NTCIP 2104: Ethernet Subnetwork Profile
- NTCIP 2201: Null Transportation Profile
- NTCIP 2202: TCP/IP & UDP/IP Transport Profile
- NTCIP 2301: Simple Trans. Mgmt. Framework (STMF)
- NTCIP 8004: Structures of Mgmt. Information (SMI)

117 Prince Drive PO Box 5120 Brookings, SD 57006
tel 800-833-3157 605-692-0200 fax 605-697-4700
www.daktronics.com/its email transportation@daktronics.com
Copyright © 2022 Daktronics DD2508962 Rev08 021122

DAKTRONICS

# Cut Sheet 10

# DAKTRONICS
# FIBER-OPTIC COMMUNICATIONS CABLE SPECIFICATIONS

Fiber and Ends provided by Others

**Fiber:**

- 62.5/125 um graded index, for standard systems
- 50/125 um graded index, laser optimized, for high definition or V-Max™ 4 protocol
- PVC outer jacket
- 3db/KM attenuation
- 850/1310 nm wave length
- 900 um diameter secondary buffer
- Tight buffer
- Minimum bend radius 4.95" (12.5 cm)
- Operating temperature: -40 degrees to +85 degrees Celsius
- Preferred Manufacturers: Optical Cable Corporation - DX Series, Belden, Corning.
- UL listed
- Meets NEC sections 770-51 (b) and (c) and 770-53 (b) and (c) Suitable for use in:
  - Indoor/Outdoor
  - Underground duct
  - Building riser
  - Plenum available upon request

| Standard Color Code: | |
|---|---|
| 1 | Blue |
| 2 | Orange |
| 3 | Green |
| 4 | Brown |
| 5 | Slate |
| 6 | White |
| 7 | Red |
| 8 | Black |
| 9 | Yellow |
| 10 | Violet |
| 11 | Rose |
| 12 | Aqua |

| Cable Diameters: | 62.5/125 um | 50.5/125 um |
|---|---|---|
| 2 fiber O.D., .28" (7 mm) | W-1242 | — |
| 4 fiber O.D., .31" (5 mm) | W-1376 | W-1494 |
| 6 fiber O.D., .22" (5.5 mm) | W-1456 | W-1489 |
| 12 fiber O.D., .26" (6.5 mm) | W-1481 | W-1490 |
| 24 fiber O.D., .33" (8.5 mm) | — | — |

| Connector Style | Fiber Type | Connector Type | Manufacturer Part Number | Daktronics Part Number |
|---|---|---|---|---|
| ST | 62.5/125 um | Non-polish | Amp/492168-1 | P-1235 |
| ST | 62.5/125 um | 3M Hotmelt | 3M/6100 | P-1264 |
| ST | 62.5/125 um | Unicam | Corning/95-000-51 | P-1293 |
| LC | 62.5/125 um | Unicam | Corning/95-000-98 | P-1285 |
| ST | 50/125 um | Unicam | Corning/95-050-51 | P-1287 |
| LC | 50/125 um | Unicam | Corning/95-050-99-X | P-1286 |

331 32nd Avenue, PO Box 5128, Brookings, SD 57006
Phone: 605-697-4300 or 800-DAKTRONICS Fax: 605-697-4700
www.daktronics.com E-mail: sales@daktronics.com
V-Max™ is a registered trademark of Daktronics, Inc.
Copyright © 2005 SL-02701 Rev01 022305

DAKTRONICS®

# Cut Sheet 11

# Product data sheet
## Characteristics

# QO112M100P
## QO LoadCenter, PoN, main breaker, 100 A, 1 PH, 12 SP, NEMA1

Product availability : Stock - Normally stocked in distribution facility

Price** : 330.00 USD



## Main

| | |
|---|---|
| Product | Load Center |
| Marketing Trade Name | QO |

## Complementary

| | |
|---|---|
| Load Center Type | Main breaker |
| Line Rated Current | 100 A |
| Number of spaces | 12 |
| Short Circuit Current Rating | 22 kA |
| Maximum Number of Single Pole Circuits | 12 |
| Maximum Number of Tandem Breakers | 12 |
| Number of Phases | 1 phase |
| Box number | 5 |
| Height | 378.97 mm (14.92 in) |
| Width | 361.95 mm (14.25 in) |
| Depth | 95.25 mm (3.75 in) |

## Environment

| | |
|---|---|
| Enclosure Rating | NEMA 1 |
| Ambient air temperature for operation | 23 °F (-5 °C)<br>104 °F (40 °C) |

## Ordering and shipping details

| | |
|---|---|
| Category | 10001 - QO PON 1PH LC,12-60 CKT, MB N1 |
| Discount Schedule | DE3A |

Disclaimer: This documentation is not intended as a substitute for and is not to be used for determining suitability or reliability of these products for specific user applications

| | |
|---|---|
| GTIN | 00785901595878 |
| Package weight(Lbs) | 0.45 kg (1 lb(US)) |
| Returnability | Yes |

# Cut Sheet 12

# UF12A series

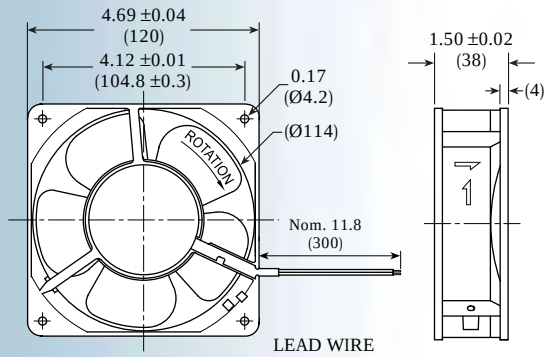


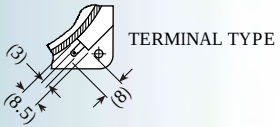


TERMINAL TYPE

Size: (120 x 120 x 38 mm)
4.69 x 4.69 x 1.5 inches

Operating voltage (VAC): 115 or 230

| | |
|---|---|
| Construction: | aluminum die cast frame; UL94V-0 PBT impeller |
| Bearing option: | motor quality ball bearings or sintered bronze sleeve |
| Motor: | shaded pole |
| Air flow: | exhaust over struts |
| Connection: | terminal or 22 AWG lead wire |
| Protection: | impedance |

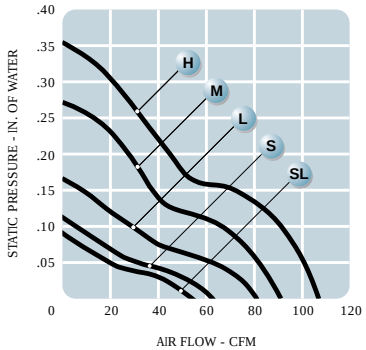


| Model No. | Rated Voltage V | Freq. HZ | Input Power W | Rated Cur. A | Locked Cur. A | Speed RPM | Air Volume $M^3$/Min | Air Volume CFM | Max Static Pressure ($H_2O$) MM | Max Static Pressure INCH | Sound Noise dB | Wt OZ |
|---|---|---|---|---|---|---|---|---|---|---|---|---|
| UF12A12-__H | 115 | 60 | 12 | 0.16 | 0.23 | 3,100 | 3.0 | 106 | 8.7 | 0.35 | 46 | 18.7 |
| UF12A23-__H | 230 | 60 | 15 | 0.08 | 0.12 | 3,100 | 3.0 | 106 | 8.7 | 0.35 | 46 | 18.7 |
| UF12A12-__M | 115 | 60 | 12 | 0.17 | 0.19 | 2,750 | 2.6 | 92 | 7.0 | 0.28 | 42 | 18.7 |
| UF12A23-__M | 230 | 60 | 15 | 0.08 | 0.09 | 2,750 | 2.6 | 92 | 7.0 | 0.28 | 42 | 18.7 |
| UF12A12-__L | 115 | 60 | 12 | 0.15 | 0.16 | 2,300 | 2.3 | 81 | 4.0 | 0.16 | 38 | 18.7 |
| UF12A23-__L | 230 | 60 | 15 | 0.07 | 0.08 | 2,300 | 2.3 | 81 | 4.0 | 0.16 | 38 | 18.7 |
| UF12A12-__S | 115 | 60 | 8 | 0.08 | 0.09 | 2,100 | 1.8 | 64 | 2.8 | 0.11 | 37 | 18.7 |
| UF12A23-__S | 230 | 60 | 8 | 0.04 | 0.05 | 2,100 | 1.8 | 64 | 2.8 | 0.11 | 37 | 18.7 |
| UF12A12-__SL | 115 | 60 | 6 | 0.06 | 0.07 | 1,800 | 1.6 | 57 | 2.3 | 0.09 | 36 | 18.7 |
| UF12A23-__SL | 230 | 60 | 6 | 0.03 | 0.04 | 1,800 | 1.6 | 57 | 2.3 | 0.09 | 36 | 18.7 |



www.mechatronics.com
E-mail: Sales@Mechatronics.com Fax: 425-222-5155 Tel: 425-222-5900 800-453-4569

# Cut Sheet 13

# TYPE AMF SERIES

FOAM & ALUMINUM FILTERS

EN-1632 or EN-1633 will be used in the TC (if applicable)

**FILTERS AIRBORNE PARTICULATE**

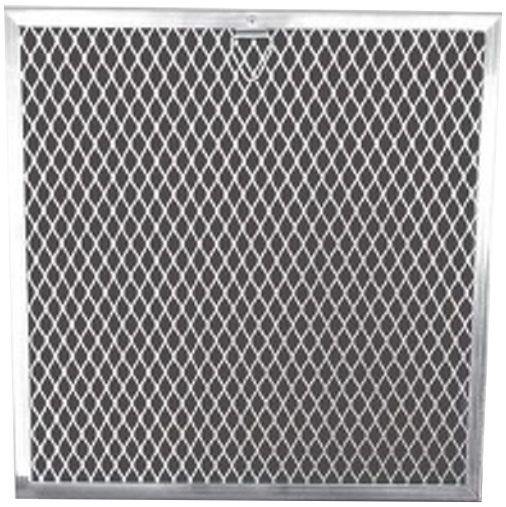

**AVAILABLE IN ONE ALLOY**

## TYPE AMF SERIES

Aluminum

**Application:** The **TYPE AMF SERIES FOAM & ALUMINUM FILTER** line is created for the design engineer to solve most applications where a permanent and washable filter is required. Unique to this line is the ability to create a foam media pack to meet the airflow restrictions and filter efficiency requirements for most applications. The filters is commonly used in Food & Beverage machines, Medical Equipment, Electronic Enclosures, Portable Power Supplies and Telecommunication Cabinets.

**Construction:** The Type AMF Series filter uses an aluminum frame to enclose a media pack. The frame is made with mitered corners and is secured with pop-rivet(s). The media pack is comprised of single or multiple layers of polyurethane reticulated filter foam surrounded by two expanded aluminum support grids. Refer to the back page of the Tech Sheet for detailed information on Filter Foam.

What makes the product line unique is our ability to draw from seven standard frame configurations and six foam porosities to create a filter assembly that meets the exact requirements of your application. Add to this our capability to offer standard mounting hardware or create and manufacture custom mounting hardware, thereby allowing American Metal Filter Company to manufacture the filter entirely in-house. Finally, we provide a service to Anodize or Chem-Film the aluminum components to MIL-SPECS when the filters are installed in corrosive environments.

### PRODUCT HIGHLIGHTS

- Multiple Foam Configurations Available
- Use 10 ppi up to 100 ppi Filter Foam
- Washable and Reusable
- Mounting Hardware Available
- Anodizing and Chem-Film to Mil-Specs Available

### FAST FACTS

**LEAD TIME:**
7-10 Days

**MINIMUM ORDER:**
No Minimum Order

**SIZING OPTIONS:**
Custom Sizes Available
*Please see reverse side for details.*

**CLASSIFICATION:**
UL 900 Class 2

Due to continuing research and development, we reserve the right to make modifications to any product.

# TYPE AMF SERIES ~ Filter Selection Chart

**ALUMINUM ALLOY 3003 H-14**

| | FRAME | | SUPORT GRID | |
|---|---|---|---|---|
| MODEL | DIMENSIONS | THICKNESS | DIAMOND | STRAND FEED |
| AMF250 | .44" X .250" X .44" | .025" | .50" x 1.00" | .040" |
| AMF312 | .44" X .312" X .44" | .025" | .50" x 1.00" | .040" |
| AMF375 | .44" X .375" X .44" | .025" | .50" x 1.00" | .040" |
| AMF437 | .44" X .437" X .44" | .025" | .50" x 1.00" | .040" |
| AMF500 | .44" X .500" X .44" | .025" | .50" x 1.00" | .040" |
| AMF750 | .69" X .750" X .69" | .030" | .50" x 1.00" | .040" |
| AMF875 | .69" X .875" X .69" | .030" | .50" x 1.00" | .040" |

**POLYURETHANE RETICULATED FILTER FOAM with FR**

| | .25" THICK | | .50" THICK | |
|---|---|---|---|---|
| POROSITY | INITIAL RESISTANCE | ARRESTANCE | INITIAL RESISTANCE | ARRESTANCE |
| 10 ppi | .01" w.g. | 38% | .03" w.g. | 63% |
| 25 ppi | .03" w.g. | 61% | .08" w.g. | 82% |
| 45 ppi | .05" w.g. | 77% | .16" w.g. | 91% |
| 60 ppi | .12" w.g. | 82% | .25" w.g. | 91% |

## TYPE AMF SERIES NOTES

### SIZING INFORMATION

* What does Nominal mean? Standard size filters are of a nominal dimension. This means the height, width and thickness dimensions are undercut by a certain amount. See below for the exact amount of undercut for each dimension.

1. Purchase filters using the exact height, width and thickness dimensions to eliminate any confusion when ordering.
2. Tolerance height and width: +/- 1/8"
3. Tolerance thickness: +/- 1/32"
4. Tolerance foam porosity +/- 5 ppi.
5. Tolerance for .XX = +/- .060" unless otherwise noted.
6. Tolerance for .XXX = +/- .030" unless otherwise noted.

### CLASSIFICATION AND TEST NOTES

1. The Type AMF Series filter is listed as UL 900 Class 2.
2. Recommended final resistance is .50" w.g.
3. Resistance is measured in inches water gauge (w.g.).
4. Arrestance percentage is measured by average synthetic dust weight.
5. Performance tests conform to ASHRAE Standard 52.1-1992 @ 300 fpm face velocity.

### FILTER CLEANING

1. To clean a dirty filter, rinse it with a moderate-to-heavy stream of warm water. High-powered steam cleaning or chemical dips are unnecessary and not recommended.

### INSTALLATION CONSIDERATIONS

1. The Type AMF Series filters may be installed in HVAC systems vertically or horizontally.

### ADDITIONAL INFORMATION

1. All metal and components are sourced within the domestic United States.
2. All filters are assembled in Chula Vista, CA.



### FILTER FOAM

Filter Foam is available in pores per inch (ppi) from 5 to 100. These are reticulated flexible polyester urethane foams. Unlike ordinary urethane foams, they have a three-dimensional structure of skeletal strands, which give them special filtering qualities.

Filter foams have low pressure drop due to the open-pore skeletal structure, but the biggest benefit is the high dust-holding capacity. The skeletal structure allows 97% of a cell to be available for dust-holding, while the remaining 3% is the cells structure.

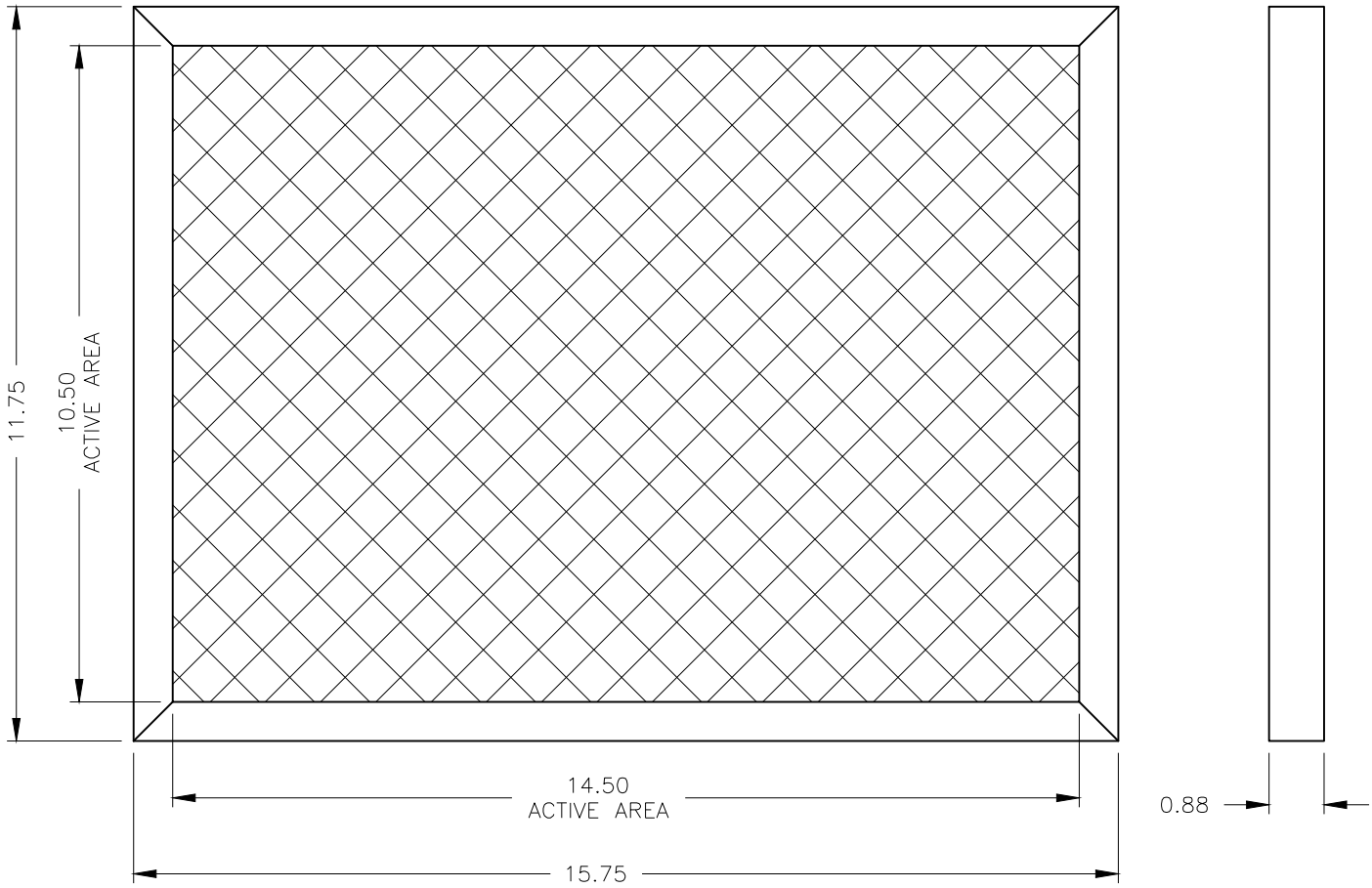


FRONT VIEW

SIDE VIEW

SPECIFICATIONS:

DAKTRONICS PART NUMBER EN-1632

11.75" x 15.75" x 0.88"

TWO STAGE OPEN CELL MEDIA

1/4" THICK BLACK 10 PPI FOAM ON UPSTREAM SIDE
1/4" THICK BLACK 25 PPI FOAM ON DOWNSTREAM SIDE

ALUMINUM FRAME
ALUMINUM UNIGRID SUPPORT ON BOTH SIDES

CLEANABLE, RATED UL 900 CLASS 2.

1.06 SQ FT ACTIVE AREA

STATIC PRESSURE DROP
0.055 IN H2O @300 FPM

| REV | DATE: | | BY: | |
|---|---|---|---|---|
| 03 | 18OCT13 | REMOVED VENDOR FROM NOTES PER MRF-4260 | JPH | |
| 02 | 11JAN00 | CHANGED FROM 20 AND 45 PPI FOAM TO 10 AND 25 PPI BLACK FOAM ADDED ACTIVE AREA | BJV | |
| 01 | 25AUG95 | CHANGED PART NO FROM A-1401 TO EN-1632 | WRT | |

DAKTRONICS, INC.
BROOKINGS, SD 57006
DO NOT SCALE DRAWING

THE CONCEPTS EXPRESSED AND DETAILS SHOWN ON THIS DRAWING ARE CONFIDENTIAL AND PROPRIETARY. DO NOT REPRODUCE BY ANY MEANS WITHOUT THE EXPRESSED WRITTEN CONSENT OF DAKTRONICS, INC.
COPYRIGHT 2013 DAKTRONICS, INC.

PROJ: VANGUARD
TITLE: AIR FILTER- 11.75" X 15.75" X 0.88"
DESIGN: | DRAWN: C FICKBOHM | DATE: 8DEC94
SCALE: 1=3

| SHEET | REV | JOB NO: | FUNC-TYPE-SIZE | |
|---|---|---|---|---|
| 1 OF 1 | 03 | P1000 | V-07-A | 66902 |

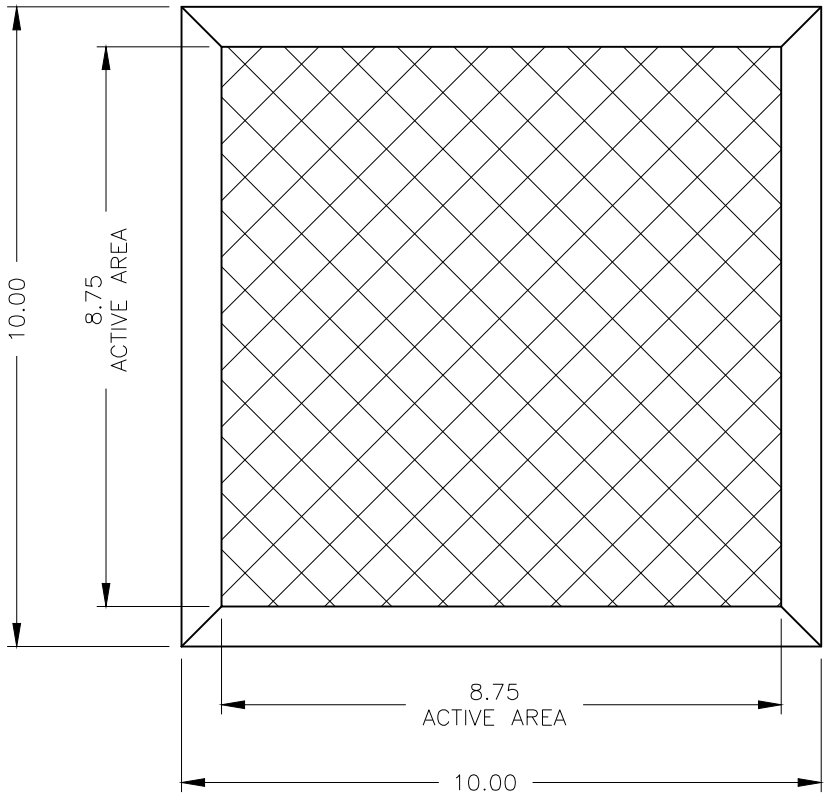


FRONT VIEW

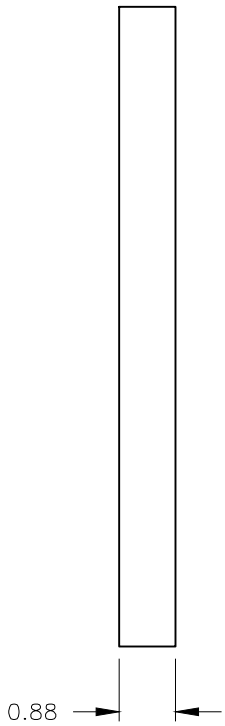


SIDE VIEW

SPECIFICATIONS:

DAKTRONICS PART NUMBER EN-1633

10.00" x 10.00" x 0.88"

TWO STAGE OPEN CELL MEDIA

1/4" THICK BLACK 10 PPI FOAM ON UPSTREAM SIDE
1/4" THICK BLACK 25 PPI FOAM ON DOWNSTREAM SIDE

ALUMINUM FRAME
ALUMINUM UNIGRID SUPPORT ON BOTH SIDES

CLEANABLE, RATED UL 900 CLASS 2.

0.53 SQ FT ACTIVE AREA

STATIC PRESSURE DROP
0.055 IN H2O @300 FPM

| REV | DATE: | | BY: | |
|---|---|---|---|---|
| 03 | 18OCT13 | REMOVED VENDOR FROM NOTES PER MRF-4260 | JPH | |
| 02 | 11JAN00 | CHANGED FROM 20 AND 45 PPI FOAM TO 10 AND 25 PPI BLACK FOAM. ADDED ACTIVE AREA. | BJV | |
| 01 | 25AUG95 | CHANGED PART NO FROM A-1450 TO EN-1633 | WRT | |

DAKTRONICS, INC.
BROOKINGS, SD 57006
DO NOT SCALE DRAWING

THE CONCEPTS EXPRESSED AND DETAILS SHOWN ON THIS DRAWING ARE CONFIDENTIAL AND PROPRIETARY. DO NOT REPRODUCE BY ANY MEANS WITHOUT THE EXPRESSED WRITTEN CONSENT OF DAKTRONICS, INC.
COPYRIGHT 2013 DAKTRONICS, INC.

| | | | |
|---|---|---|---|
| PROJ: VANGUARD | | | |
| TITLE: AIR FILTER: 10.00" X 10.00" X 0.88" | | | |
| DESIGN: | DRAWN: WTUCKER | DATE: 23AUG95 | |
| SCALE: 1=3 | | | |

| SHEET | REV | JOB NO: | FUNC-TYPE-SIZE | |
|---|---|---|---|---|
| | 02 | P1000 | V-07-A | 74357 |

# Cut Sheet 14

WLB32ZC285QM

# WLB32 Industrial LED Light Bar (AC)

## Datasheet

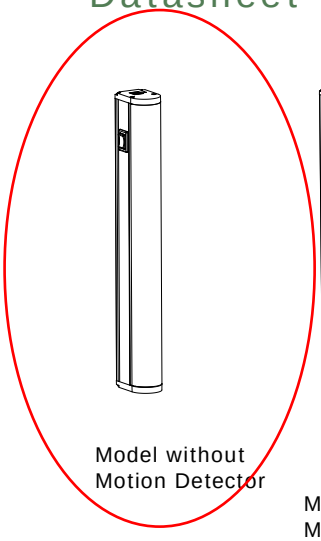

Model without Motion Detector

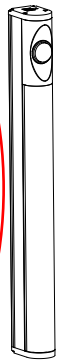

Model with Motion Detector

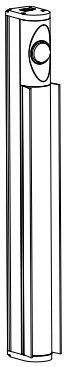

Model with Eye Shield and Motion Detector

Banner's WLB32 is an ultra-bright LED fixture that features an even light output for a no glare 'glow'. Suitable for a variety of environments and applications, including work stations, machine lighting, control cabinets, and manufacturing lines, the WLB32 uses advanced LED lighting technology to provide a high-quality and maintenance free industrial lighting solution for years.

- Highly energy efficient for overall cost savings
- High/Low/Off switch
- Models with eye shield block side glare
- Daisy chain power to multiple lights
- Motion detection models available
- Metal housing, shatterproof window
- Easy installation with snap clips, or a choice of magnetic or angle brackets

WLB32 Industrial LED Light Bars are available as cascadable models that can be "daisy-chained" together for a continuous length of lighting, with a minimum of wiring. Each light bar can be turned to high, low, or off independently of the other lights, upstream or downstream, in the chain. A double-ended accessory cordset must be used between each pair of cascading lights.

| 90 to 264 V ac Models | | | |
|---|---|---|---|
| Models | Lighted Length (mm) | Connector | Lumens |
| WLB32ZC285PBQMB | 285 | Custom Quick Disconnect | 650 |
| WLB32ZC570PBQMB | 570 | | 1300 |
| WLB32ZC850PBQMB | 850 | | 1950 |
| WLB32ZC1130PBQMB | 1130 | | 2600 |

The listed models include a U.S. power cable.

- To order model with no power cable, omit the suffix "B" from the model number. For example, WLB32ZC285PBQM. For a list of other countries' wall plug cables, refer to the Accessories list.
- To order the light without the integral switch, omit the "PB" from the model number. For example, WLB32ZC285QMB.
- To order the light with the integral motion detector, replace the 'PB' from the model number with 'M'. For example, WLB32ZC285MQMB.
- To order the light with the eye shield, add an 'E' after the length. For example, WLB32ZC285EPBQMB.

## Installing the WLB32 AC Series Lights

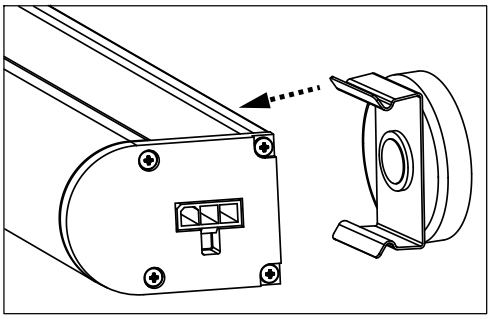

*Figure 1. Attaching the Snap Brackets (Step 1)*

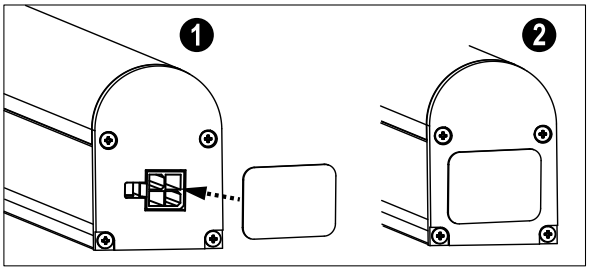


*Figure 2. Installing the Cascade Cover (Step 8)*

1. Attach the snap brackets to the light.
2. Select a suitable horizontal or vertical dry mounting location.
3. Place the light in the mounting location and mark the positions of the snap bracket mounting holes.
4. Drill the holes and use appropriate screws to secure the snap bracket to the mounting location.
5. Snap the light onto the brackets.
6. When daisy chaining multiple lights, follow steps 1 through 5 to mount additional lights. See the application note in the *Specifications* for the maximum allowed lights daisy chained together and maximum allowed cable run when choosing mounting locations.
7. Connect the daisy chained units together using cascade cordsets (see *Accessories*).
8. Install the supplied cascade cover over the output connector on the last light in the chain.
9. Plug the power cord from the first light into the wall outlet.

CAUTION: To reduce the risk of fire, electric shock, or injury to personnel:

- Use only insulated staples or plastic ties to secure cords;
- Route and secure cords so that they will not be pinched or damaged when the cabinet is pushed to the wall;
- Position the portable cabinet light with respect to the cabinet so the lamp replacement markings are able to be read during relamping;
- Do not recess into ceilings or soffits; and
- Do not conceal the cords. The National Electrical Code (NEC) does not permit cords to be concealed where damage to insulation may go unnoticed. To prevent fire danger, do not run cord behind walls, ceilings, soffits, or cabinets where it may be inaccessible for examination. Cords should be visually examined periodically and immediately replaced when any damage is noted.

## Specifications

Operating Voltage

90 to 264 V ac (50 or 60 Hz)
Power factor > 0.95 on high setting at 120 V ac

Supply Current

| Light Length (mm) | Max Current Draw (A) at 90 V ac | Typical Current Draw (A) | |
|---|---|---|---|
| | | 120 V ac | 230 V ac |
| 285 | 0.125 | 0.075 | 0.045 |
| 570 | 0.250 | 0.150 | 0.080 |
| 850 | 0.375 | 0.225 | 0.115 |
| 1130 | 0.500 | 0.300 | 0.150 |

Supply Protection Circuitry
Protected against transient voltages

Light Characteristics
Color: Daylight white
Color temperature (CCT): 5000K (±300K)
Lumen output: 650 (±5%) per foot, typical at 25 °C (77 °F)
CRI: 85 typical
Eye shield reduces lumens by approximately 25%

LED Lifetime
Lumen Maintenance - $L_{70}$
When operating within specifications, output will decrease less than 30% after 50,000 hours.

Push Button
II = 100% light intensity
I = 50% light intensity
O = Standby

Models with Motion Detection
Light turns off after approximately 60 seconds without detecting motion.
Range: 12 m; ±45° field of view
Standby current: 170 µA

Construction
Anodized aluminum housing; polycarbonate window and end caps; stainless steel mounting brackets

Spacing Criterion
Vertical: 1.22
Horizontal: 1.32

Mounting
Snap clips; optional magnetic mount or swivel bracket accessories available

Connections
Integral custom QD (connecting cordset required)

Environmental Rating
IEC IP50

Vibration and Mechanical Shock
Vibration 10-55 Hz 1.0 mm p-p amplitude per IEC60068-2-6
Shock 15G 11 ms duration, half sine wave per IEC60068-2-27

Operating Temperature
–25 °C to +45 °C (–13 °F to 113 °F)
Models with Motion Detection: –20 °C to +45 °C (–4 °F to +113 °F)

Storage Temperature
–40 °C to +70 °C (–40 °F to +158 °F)

Test Data
LM-79, LM-80, TM-21

Certifications

UL Listed only for 120 V ac, 60 Hz

UL Recognized for easy installation in control cabinets

Application Note
When connecting cascadable lights in series, do not exceed the maximum unit limit of 10, regardless of light size, and do not exceed a maximum wiring distance of 100 m (328 ft)

## Spacing Criteria (SC)

The spacing criteria is the fixture-spacing-to-mounting-height ratio and aids in laying out a pattern of fixtures. Multiply the spacing criteria by the mounting height to get the maximum fixture spacing that still provides even illumination (no shadowing between fixtures).

Luminaire Spacing = SC × Height to Illuminated Plane

The mounting height is the distance from the fixture to the surface you are lighting.

## Light Characteristics

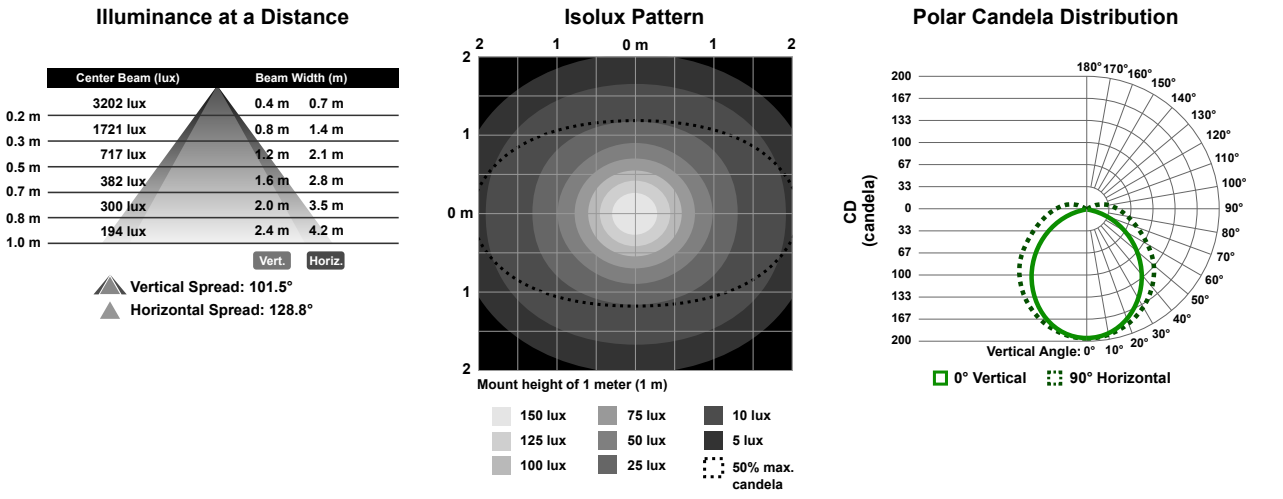


*Figure 3. 285 mm Models*

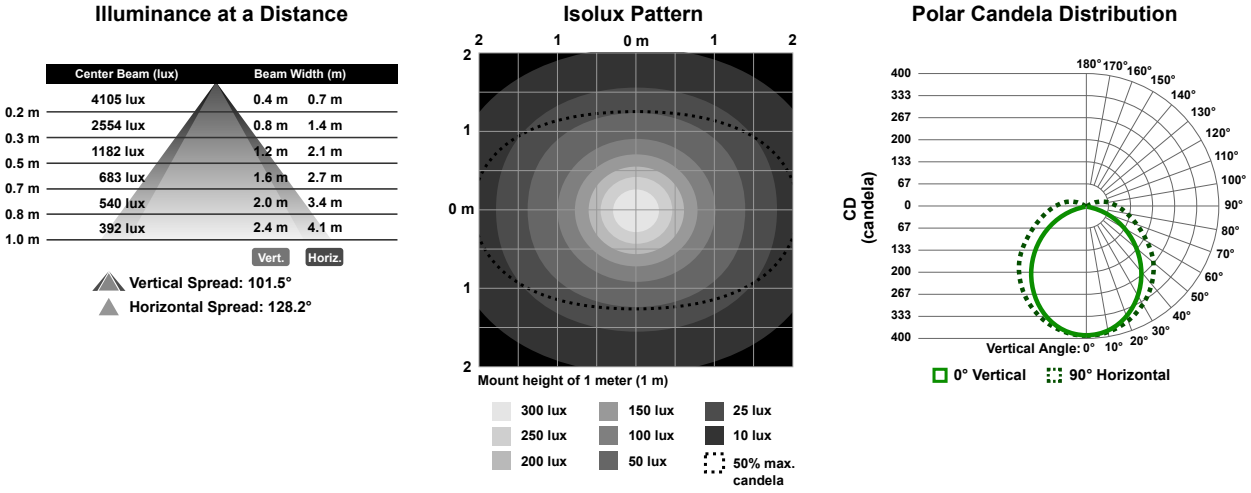


*Figure 4. 570 mm Models*

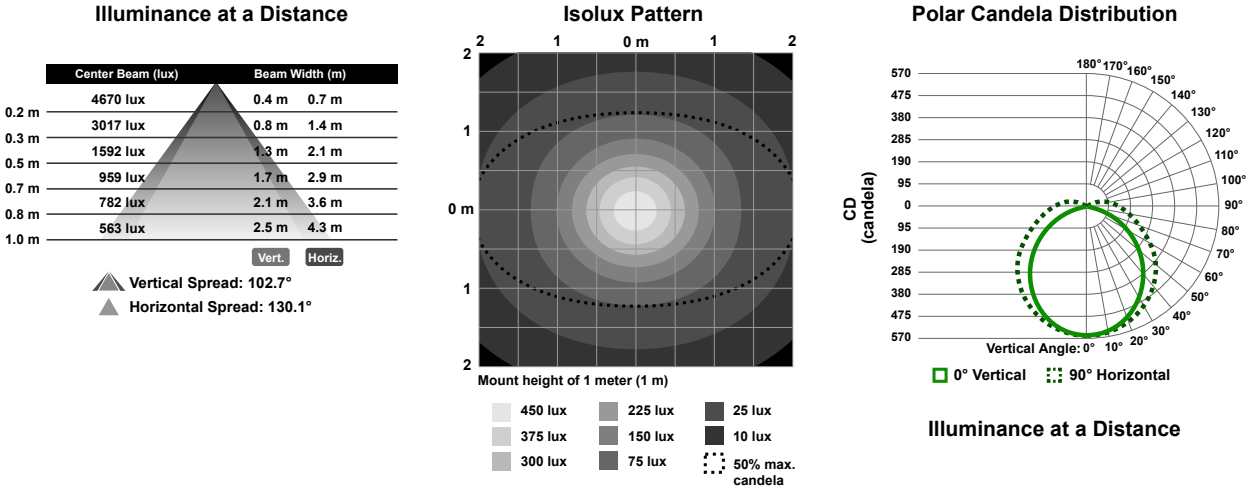


*Figure 5. 850 mm Models*

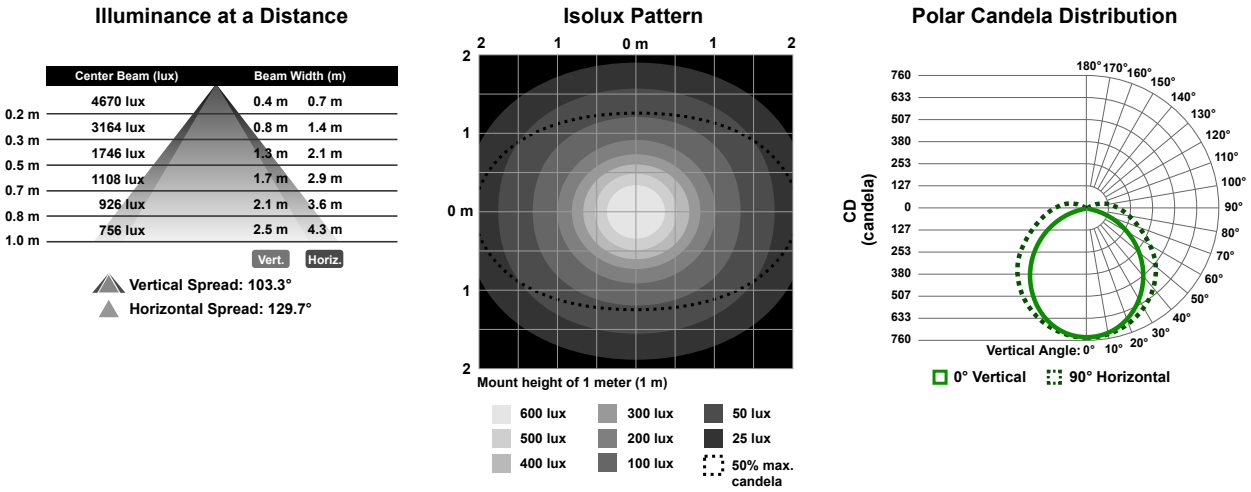


*Figure 6. 1130 mm Models*

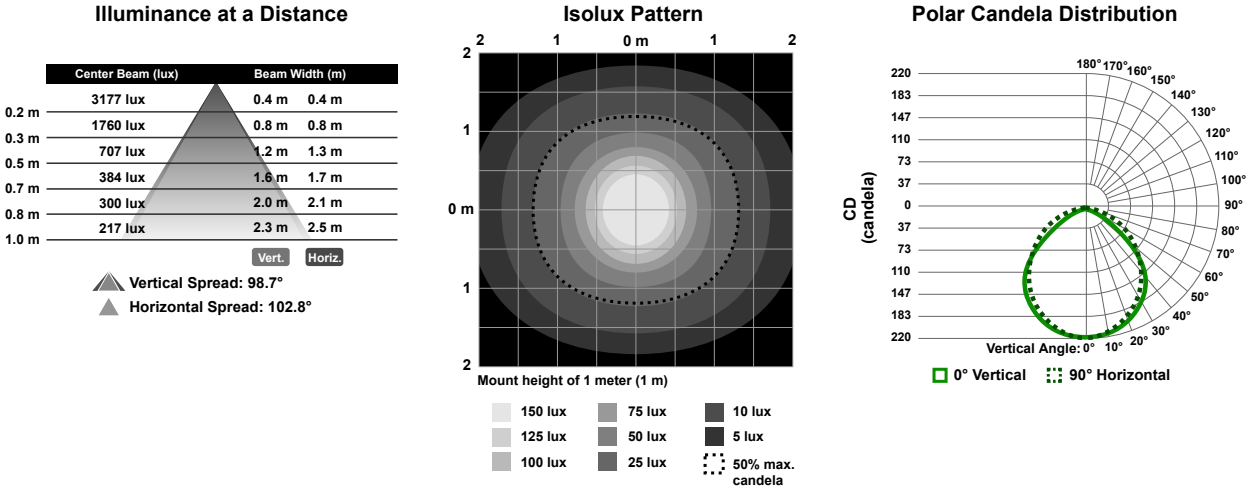


*Figure 7. 285 mm Models with Eye Shields*

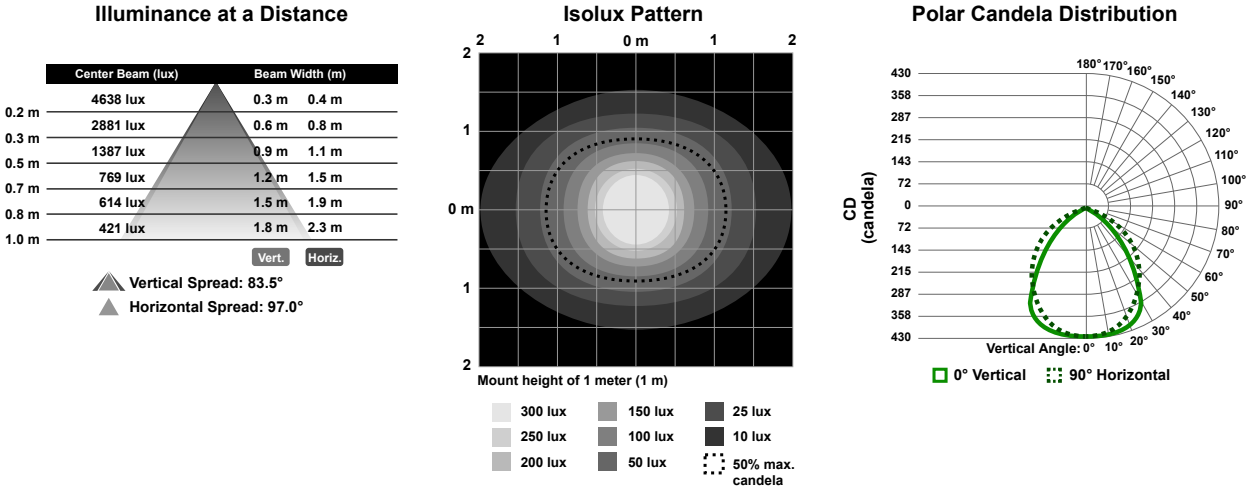


*Figure 8. 570 mm Models with Eye Shields*

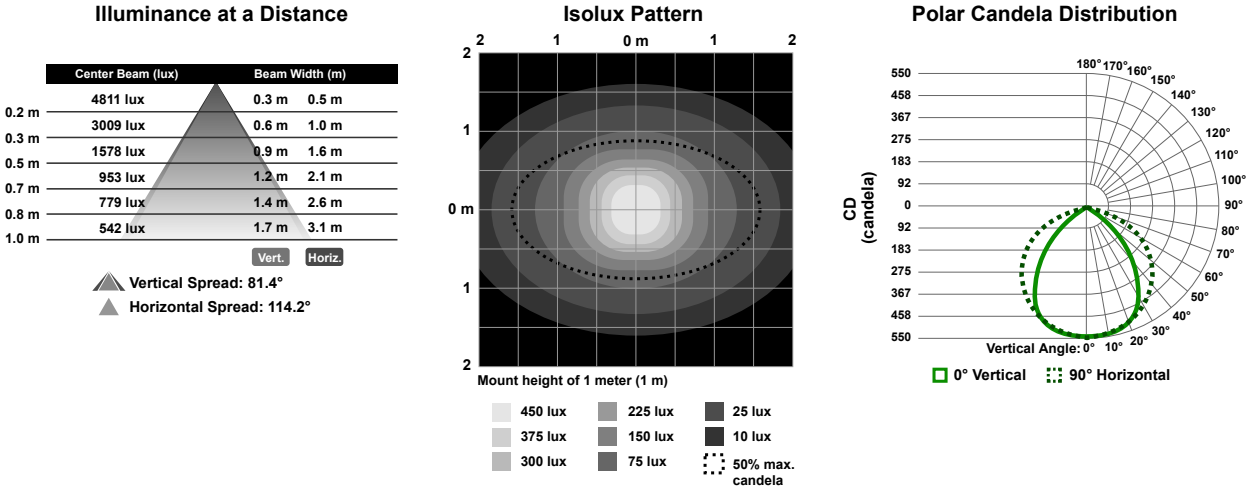


*Figure 9. 850 mm Models with Eye Shields*

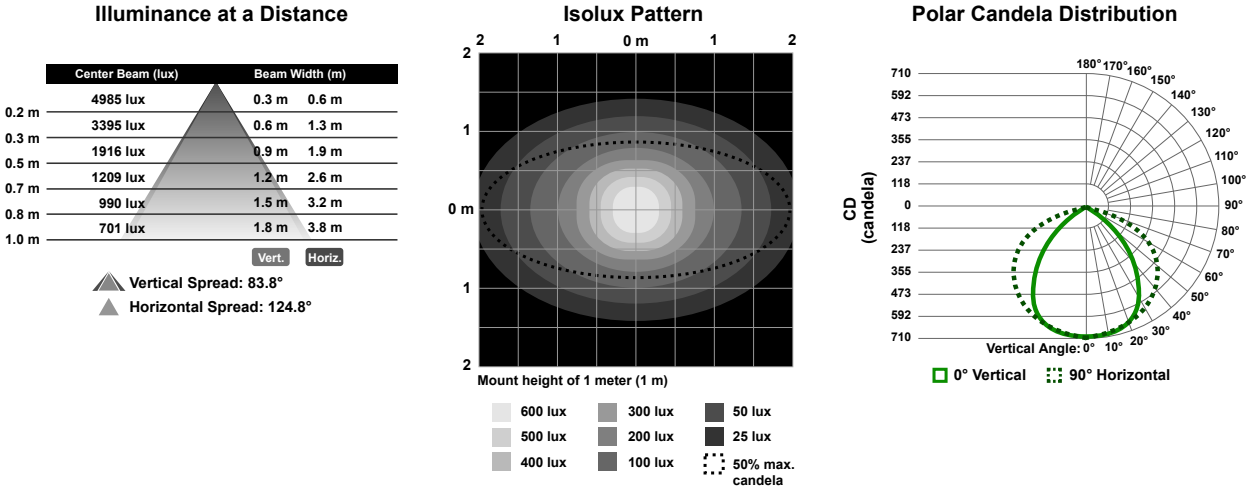


*Figure 10. 1130 mm Models with Eye Shields*

## Dimensions

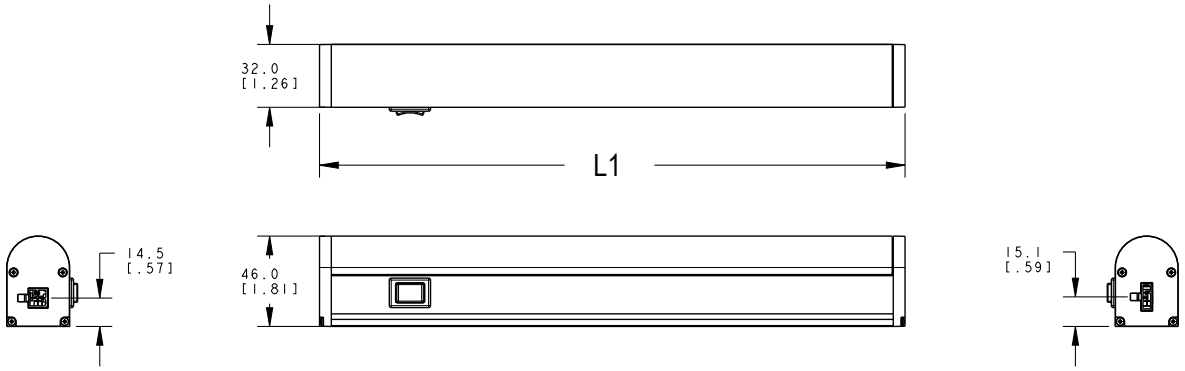


### Motion Detector and/or Eye Shield Models

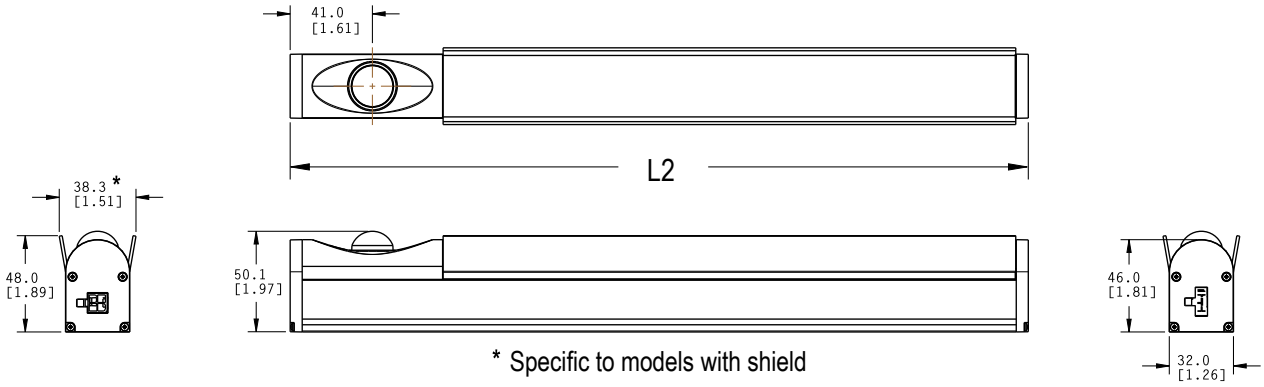


| Model | Models without Motion Detector | Models with Motion Detector and/or Eye Shield |
|---|---|---|
| | L1 | L2 |
| WLB32ZC285..QM | 298 mm (11.7 in) | 368 mm (14.5 in) |
| WLB32ZC570..QM | 580 mm (22.8 in) | 650 mm (25.6 in) |
| WLB32ZC850..QM | 862 mm (33.9 in) | 932 mm (36.7 in) |

| Model | Models without Motion Detector | Models with Motion Detector and/or Eye Shield |
|---|---|---|
| | L1 | L2 |
| WLB32ZC1130..QM | 1144 mm (45.0 in) | 1214 mm (47.8 in) |

## Accessories

| Wall Plug Cordsets | | | | |
|---|---|---|---|---|
| Model | Plug Type | Countries | Length | Dimensions |
| LQMAC-306 | Flying Leads | | 1.8 m (6 ft) | 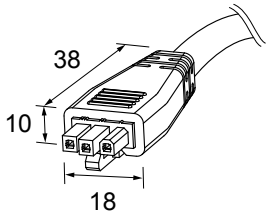 |
| LQMAC-306B | NEMA 5-15 grounded (IEC Type B) | United States, Canada, Japan, Puerto Rico, Taiwan | | |
| LQMAC-306D | BS 546 (IEC Type D) | India | | |
| LQMAC-306EF | CEE 7/7 (IEC Type E or F) | Germany, France, South Korea, The Netherlands, Poland, Spain, Turkey | | |
| LQMAC-306G | BS 1363 (IEC Type G) | United Kingdom, Ireland, Singapore, Vietnam | | |
| LQMAC-306I | AS/NZS 3112 (IEC Type I) | China, Australia, New Zealand | | |
| LQMAC-306N | NBR 14136 (IEC Type N) | Brazil | | |
| LQMAC-310B | NEMA 5-15 grounded (IEC Type B) | United States, Canada, Japan, Puerto Rico, Taiwan | 3 m (10 ft) | |

| Continuous Run/Cascade Cordsets | | | |
|---|---|---|---|
| Model | Length | Style | Dimensions |
| LQMAEC-3005SS | 0.15 m (0.5 ft) | Male straight/Male straight | 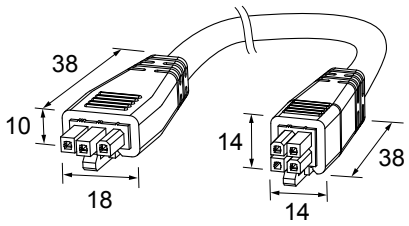 |
| LQMAEC-301SS | 0.31 m (1 ft) | | |
| LQMAEC-303SS | 0.91 m (3 ft) | | |
| LQMAEC-306SS | 1.83 m (6 ft) | | |
| LQMAEC-312SS | 3.66 m (12 ft) | | |
| LQMAEC-320SS | 6.1 m (20 ft) | | |
| LQMAEC-330SS | 9.14 m (30 ft) | | |

### Enclosure Accessories

LMBEDS Switch

- Bracket with plunger switch to power lights when the enclosure is opened
- Refer to datasheet *160672* for more information

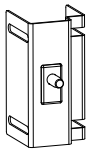

## Mounting Brackets

### LMBWLB32

- Replaces the bracket that ships with the WLB32 light
- Stainless steel
- Includes 4 snap clips, 4 screws, and 2 insulator caps

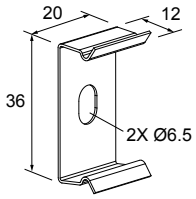


### LMBWLB32-180S

- Swivel bracket kit allows 180° of movement

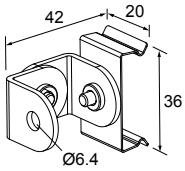


### LMBWLB32MAG

- Magnetic mounting bracket for easy attachment to steel and iron surfaces

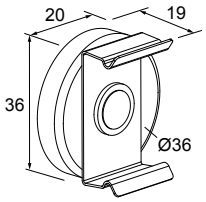


### LMBWLB32U

- Die cast bracket for rugged applications
- Secured to light with included thumb screw
- Clearance hole for 6 mm (1/4 in) button head screw

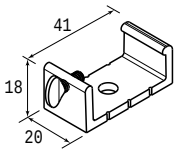


### LMBWLB32UT

- Die cast bracket for rugged applications
- Secured to light with included thumb screw
- Integral 1/4-20 stud for mounting

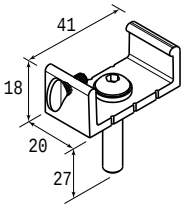


## Banner Engineering Corp. Limited Warranty

Banner Engineering Corp. warrants its products to be free from defects in material and workmanship for one year following the date of shipment. Banner Engineering Corp. will repair or replace, free of charge, any product of its manufacture which, at the time it is returned to the factory, is found to have been defective during the warranty period. This warranty does not cover damage or liability for misuse, abuse, or the improper application or installation of the Banner product.

THIS LIMITED WARRANTY IS EXCLUSIVE AND IN LIEU OF ALL OTHER WARRANTIES WHETHER EXPRESS OR IMPLIED (INCLUDING, WITHOUT LIMITATION, ANY WARRANTY OF MERCHANTABILITY OR FITNESS FOR A PARTICULAR PURPOSE), AND WHETHER ARISING UNDER COURSE OF PERFORMANCE, COURSE OF DEALING OR TRADE USAGE.

This Warranty is exclusive and limited to repair or, at the discretion of Banner Engineering Corp., replacement. IN NO EVENT SHALL BANNER ENGINEERING CORP. BE LIABLE TO BUYER OR ANY OTHER PERSON OR ENTITY FOR ANY EXTRA COSTS, EXPENSES, LOSSES, LOSS OF PROFITS, OR ANY INCIDENTAL, CONSEQUENTIAL OR SPECIAL DAMAGES RESULTING FROM ANY PRODUCT DEFECT OR FROM THE USE OR INABILITY TO USE THE PRODUCT, WHETHER ARISING IN CONTRACT OR WARRANTY, STATUTE, TORT, STRICT LIABILITY, NEGLIGENCE, OR OTHERWISE.

Banner Engineering Corp. reserves the right to change, modify or improve the design of the product without assuming any obligations or liabilities relating to any product previously manufactured by Banner Engineering Corp.

## Copyright Notice

Any misuse, abuse, or improper application or installation of this product or use of the product for personal protection applications when the product is identified as not intended for such purposes will void the product warranty. Any modifications to this product without prior express approval by Banner Engineering Corp will void the product warranties. All specifications published in this document are subject to change; Banner reserves the right to modify product specifications or update documentation at any time. For the most recent version of any documentation, refer to: *www.bannerengineering.com*. © Banner Engineering Corp. All rights reserved.

# Appendix B: Drawings

**Figure 1** is an illustration of a Daktronics drawing label. The drawing number is located in the lower-right corner of the drawing. Drawings are identified by listing the last set of digits and the letter preceding them. In the following example, the drawing is referred to as **Drawing A-114667**.

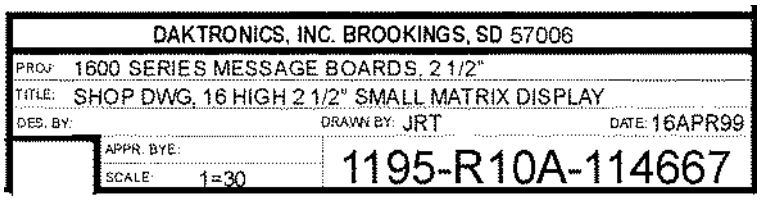


***Figure 1:*** *Daktronics Drawing*

**Shop Drawings**

1. Shop Drawing, VF-2020-96x384-20-RGB ..... **Drawing B-3580630**
2. Module Assembly, 24x16 ..... **Drawing B-1179005**
3. Shop Drawing, ACP ..... **Drawing B-1113023**

**Traffic Cabinets**

4. Shop Drawing, TC, 334, ALU, GND, VFC ..... **Drawing B-3433901**
5. Shop Drawing, VFC ..... **Drawing B-3055824**
6. Site Riser, 1 VF-2X20, VFC In TC ..... **Drawing B-3686201**

## VERTICAL SUPPORT SPACING TABLE

MOUNTING CALCULATIONS: SEE NOTE 11
IF THE VERTICAL SUPPORTS EXCEED THE STATED MAXIMUM SPACINGS THEN CONTACT DAKTRONICS ENGINEERING.

| | |
|---|---|
| MAX VERTICAL SPACING "A" | 6'-6" |
| MAX END SPACING "B" | 11" |
| MINIMUM # OF VERTICAL SUPPORTS REQUIRED | 6 |

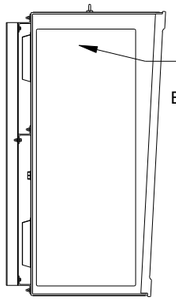


**LEFT SIDE**

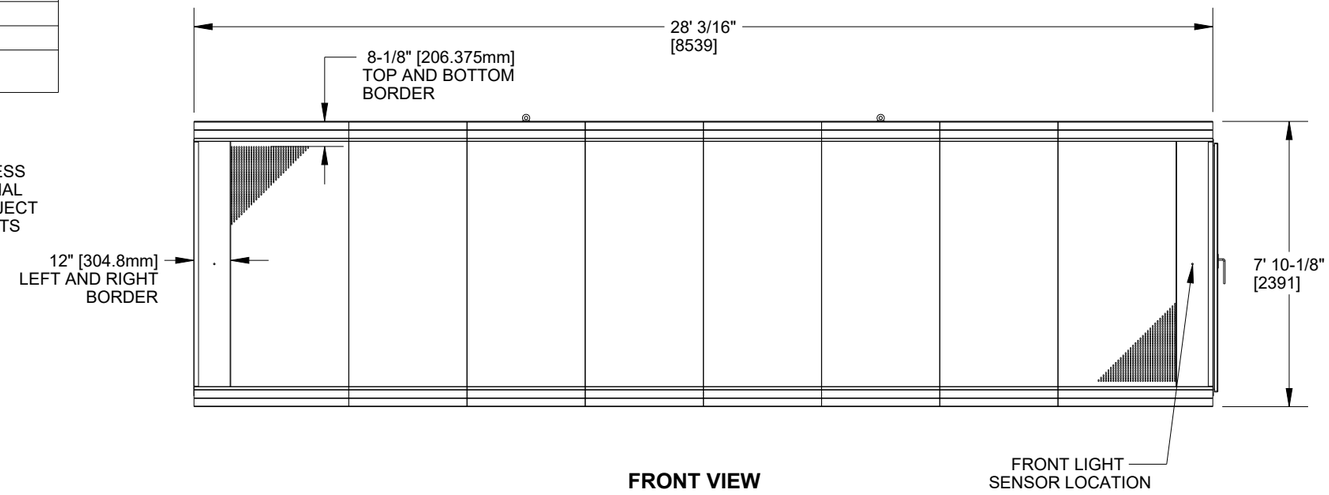


**FRONT VIEW**

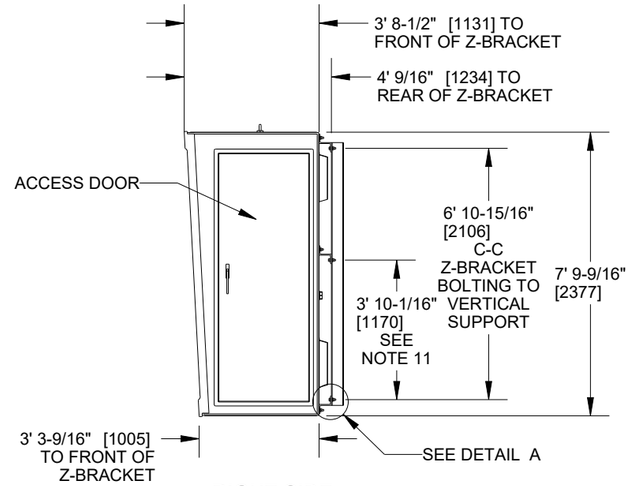


**RIGHT SIDE**

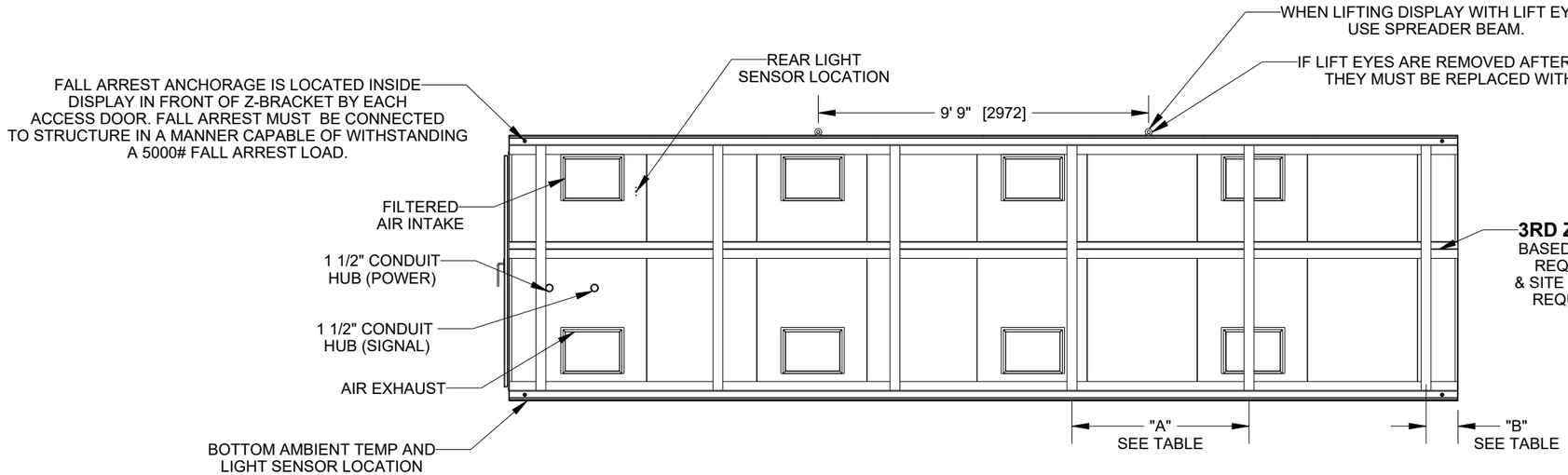


**REAR VIEW**

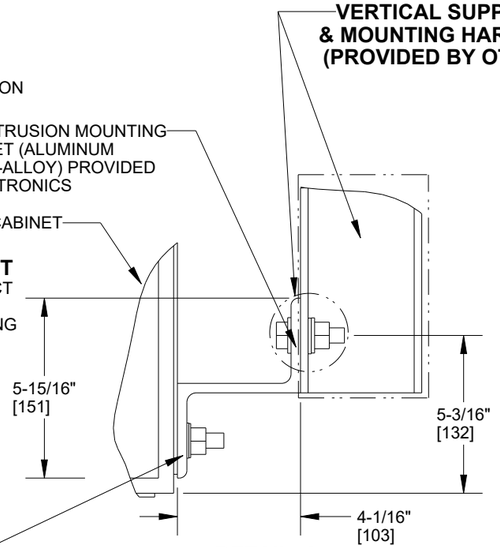


**DETAIL A**
**SCALE 1/5**

Z-BRACKETS ARE BOLTED TO THE REAR OF THE DISPLAY BY DAKTRONICS. EACH Z-BRACKET IS ATTACHED TO THE CABINET USING ∅5/8" A325 MECHANICALLY GALVANIZED STRUCTURAL GRADE HARDWARE. FINAL REVIEW OF MOUNTING DETAILS ARE THE RESPONSIBILITY OF THE CUSTOMER AND THE CUSTOMER'S ENGINEERS. THE VERTICAL SUPPORTS MUST BE ATTACHED AS SHOWN WITHIN THE MAXIMUM SPACING REQUIREMENTS. STAINLESS STEEL HARDWARE AVAILABLE PER CONTRACT REQUIREMENTS.

## NOTES

| | |
|---|---|
| 1) | MATRIX SIZE 96 X 384 , 6" NOMINAL CHARACTER. |
| 2) | DISPLAY WILL BE A SINGLE FACE CONFIGURATION. |
| 3) | SEE ILLUSTRATIONS FOR POWER AND SIGNAL CONDUIT ENTRANCES. |
| 4) | ALL DIMENSIONS ARE IN FEET & INCHES [mm]. |
| 5) | FULL PROTECTIVE MASKED FACE PANEL. |
| 6) | MAINTENANCE OF DISPLAY IS INTERNAL VIA WALK IN CABINET. |
| 7) | ALL ALUMINUM CONSTRUCTION. |
| 8) | POSITIVE PRESSURE VENTILATION SYSTEM. |
| 9) | WEIGHT OF THE DISPLAY IS APPROXIMATELY 3800 LBS (1724 KG). |
| 10) | VERTICAL SUPPORTS DESIGNED AND SUPPLIED BY OTHERS. |
| 11) | ALL DESIGN AND MOUNTING CALCULATIONS CONFORM TO "AASHTO LRFD SPECIFICATIONS FOR STRUCTURAL SUPPORTS FOR HIGHWAY SIGNS, LUMINAIRES, AND TRAFFIC SIGNALS, 1ST EDITION" |
| 12) | DISPLAYS ARE NOT DESIGNED FOR GALLOPING LOAD REQUIREMENTS IN AASHTO SECTION 11.7. DISPLAYS MAY ONLY BE INSTALLED ON STRUCTURES THAT ARE NOT SUSCEPTIBLE TO GALLOPING OR PROPER MITIGATION DEVICES SHALL BE INSTALLED TO PREVENT GALLOPING ON SUSCEPTIBLE STRUCTURES SUCH AS MONOTUBE, CANTILEVERED STRUCTURES. |

| REV: | DATE: | DESCRIPTION: | BY: | |
|---|---|---|---|---|
| 03 | 05-MAY-2022 | UPDATED NOTES SECTION TO INCLUDE ITEM 12 - EXCLUSION OF GALLOPING FROM DESIGN AND STRUCTURE INFORMATION | MMS | |
| 02 | 13-JAN-2022 | ADDED BORDER DIMENSIONS | MMS | |
| 01 | 05-FEB-2018 | UPDATED AASHTO SPEC | LMS | |

THE CONCEPTS EXPRESSED AND DETAILS SHOWN ON THIS DRAWING ARE CONFIDENTIAL AND PROPRIETARY. DO NOT REPRODUCE BY ANY MEANS WITHOUT THE EXPRESS WRITTEN CONSENT OF DAKTRONICS, INC. OR ITS WHOLLY OWNED SUBSIDIARIES. COPYRIGHT 2022 DAKTRONICS, INC. (USA)

THIRD ANGLE PROJECTION

DAKTRONICS

| | | | | |
|---|---|---|---|---|
| PROJECT: | VANGUARD | | | |
| TITLE: | SHOP DRAWING, VF-20**-96X384-20-*, 5/8" HW | | | |
| DATE: 05-MAY-22 | DIM UNITS: INCHES [MILLIMETERS] | | SHEET | REV |
| SCALE: 1/50 | DO NOT SCALE DRAWING | | | 03 |
| DESIGN: DREITZ | JOB NO. | FUNC - TYPE - SIZE | 3580630 | |
| DRAWN: CKOLBEC | P2032 | F - 10 - B | | |

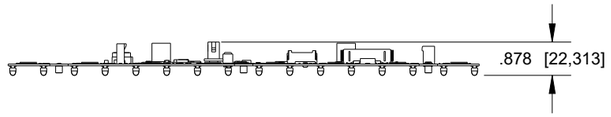


**TOP VIEW**

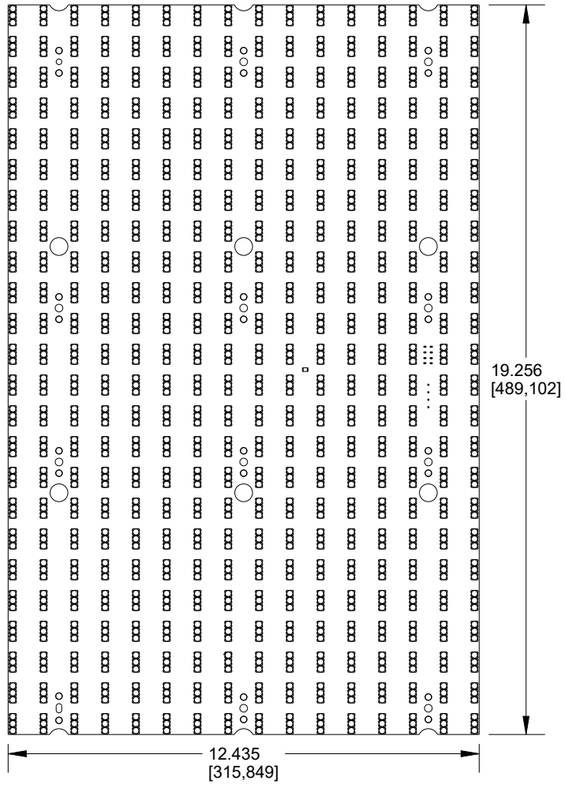


**FRONT VIEW**

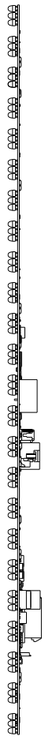

**RIGHT VIEW**

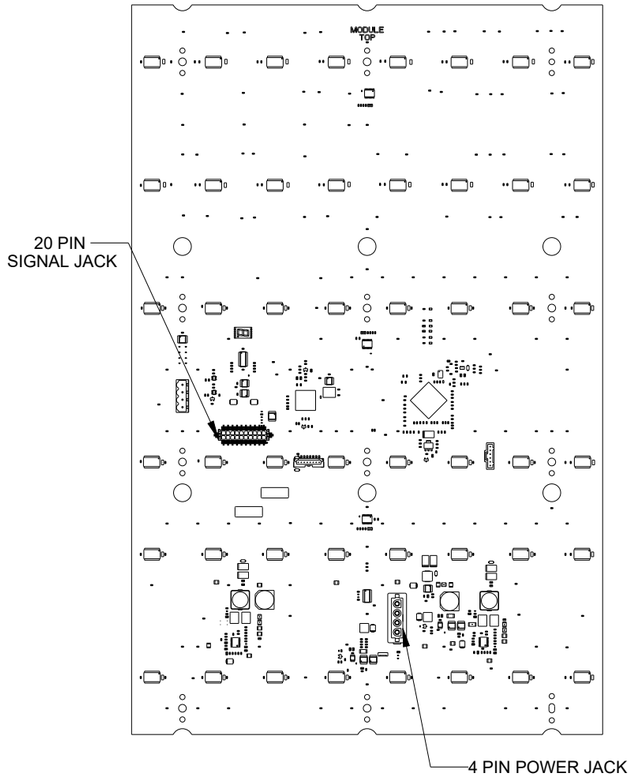


**REAR VIEW**

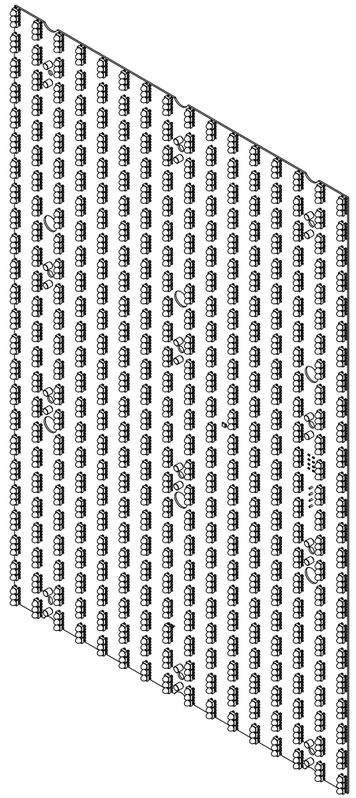

**FRONT ISOMETRIC VIEW**

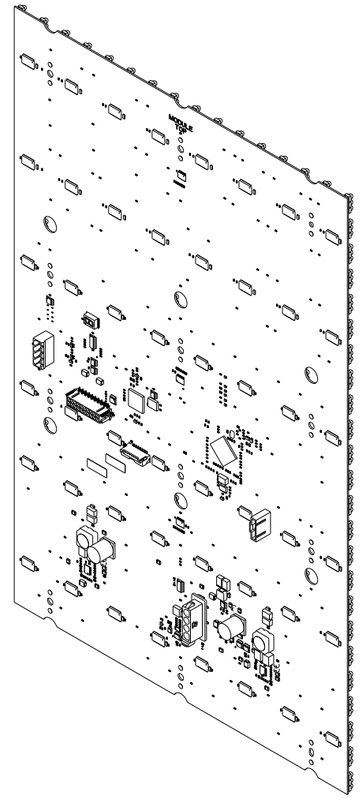

**REAR ISOMETRIC VIEW**

| REV | DATE: | | BY: | |
|---|---|---|---|---|
| 01 | 22 JAN 19 | ADDED DIMENSIONS AND NOTES FOR JACKS | NAC 2019 | |

THE CONCEPTS EXPRESSED AND DETAILS SHOWN ON THIS DRAWING ARE CONFIDENTIAL AND PROPRIETARY. DO NOT REPRODUCE BY ANY MEANS WITHOUT THE EXPRESS WRITTEN CONSENT OF DAKTRONICS, INC. OR ITS WHOLLY OWNED SUBSIDIARIES.
COPYRIGHT 2019 DAKTRONICS, INC. (USA)

DAKTRONICS

THIRD ANGLE PROJECTION

| | | | | |
|---|---|---|---|---|
| PROJECT: | VANGUARD | | | |
| TITLE: | SHOP DRAWING, MODULE, 24X16-20-* | | | |
| DATE: 28-JAN-19 | DIM UNITS: INCHES [MILLIMETERS] | | SHEET | REV |
| SCALE: 1/4 | DO NOT SCALE DRAWING | | 1 OF 1 | 01 |
| DESIGN: JBRANDS | JOB NO. | FUNC - TYPE - SIZE | 1179005 | |
| DRAWN: JHOLM | P1332 | F - 10 - B | | |

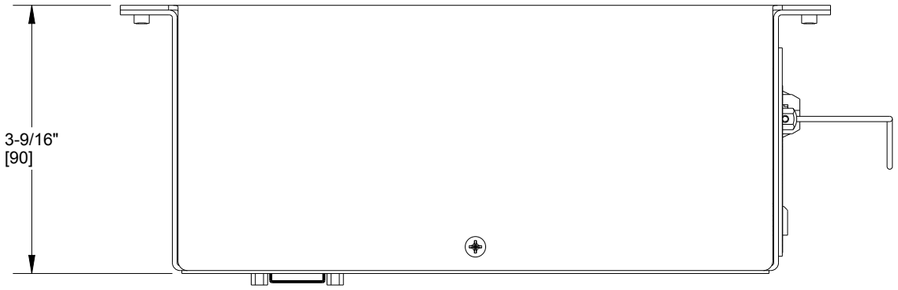


*TOP VIEW*

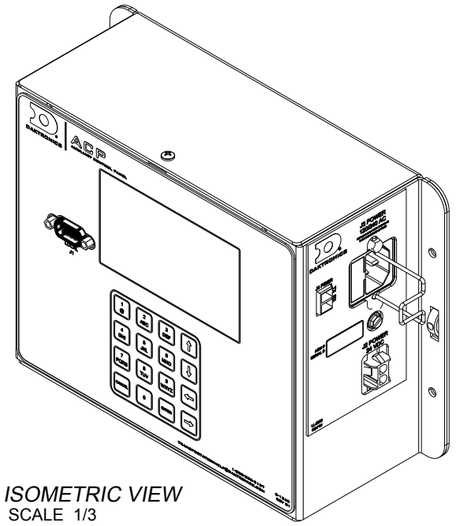

*FRONT ISOMETRIC VIEW*
SCALE 1/3

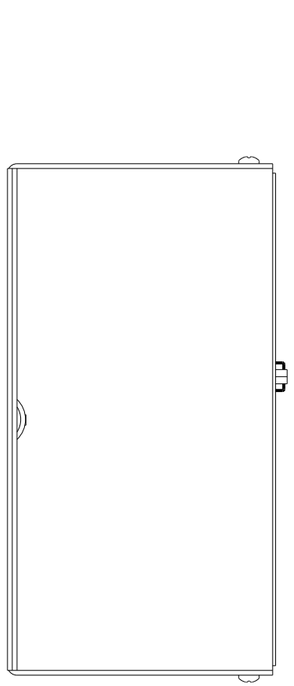

*LEFT SIDE VIEW*

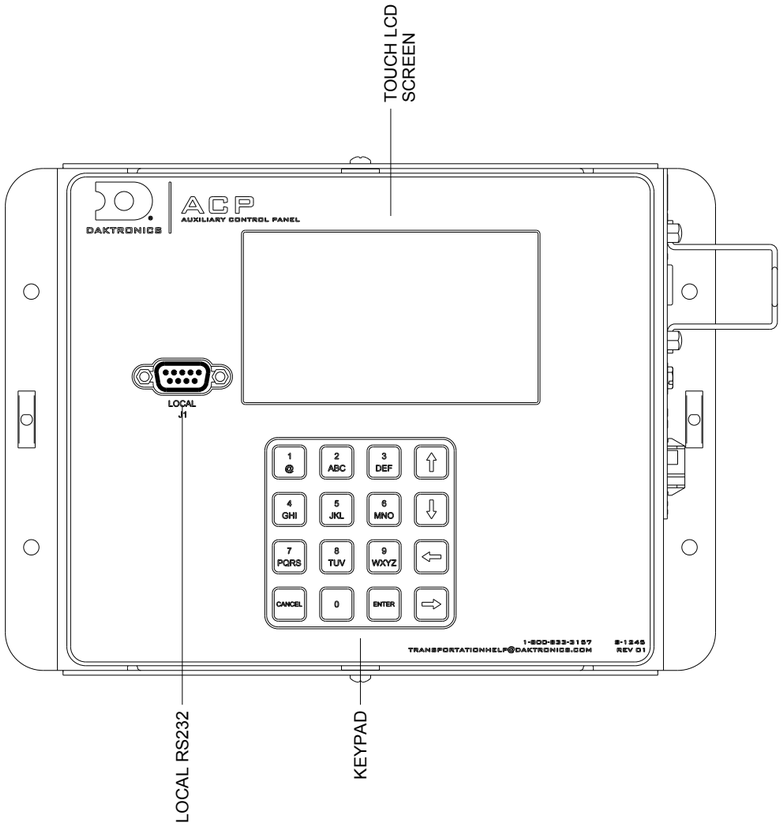


*FRONT VIEW*

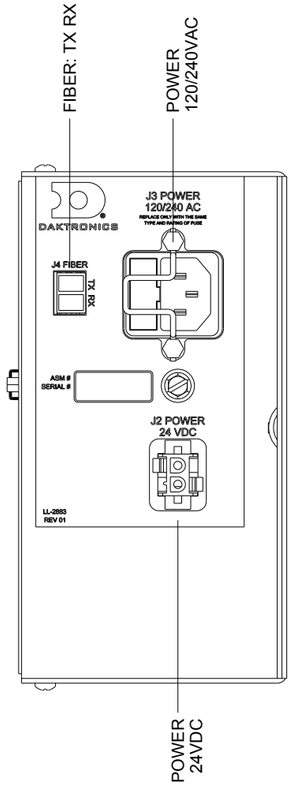


*RIGHT SIDE VIEW*

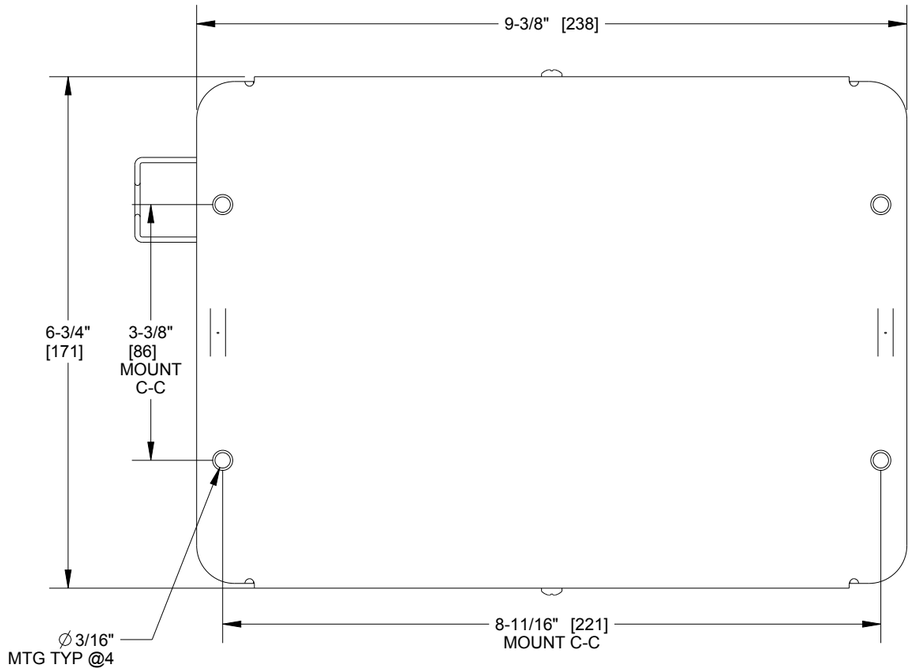


*REAR VIEW*

NOTES:
1. ALL DIMENSIONS SHOWN ARE IN INCHES [MILLIMETERS]
2. WEIGHT: 3.5 LBS [1.6 KG]
3. POWER: 120/240VAC OR 24VDC

| REV | DATE: | | BY: |
|---|---|---|---|
| 01 | 19 JAN 15 | UPDATED DRAWING LABELS | JPH |

DAKTRONICS, INC.
BROOKINGS, SD 57006
DO NOT SCALE DRAWING

THE CONCEPTS EXPRESSED AND DETAILS SHOWN ON THIS DRAWING ARE CONFIDENTIAL AND PROPRIETARY. DO NOT REPRODUCE BY ANY MEANS WITHOUT THE EXPRESS WRITTEN CONSENT OF DAKTRONICS, INC.
COPYRIGHT 2015 DAKTRONICS, INC.

PROJ: VANGUARD
TITLE: SHOP DRAWING, ACP: AUXILIARY CONTROL PANEL
DESIGN: DKLOSE | DRAWN: JHALIBU | DATE: 19-JAN-15
SCALE: 1/2

| SHEET: | REV | JOB NO: | FUNC-TYPE-SIZE | |
|---|---|---|---|---|
| 1 OF 1 | 01 | P 1248 | F – 10 – B | 1113023 |

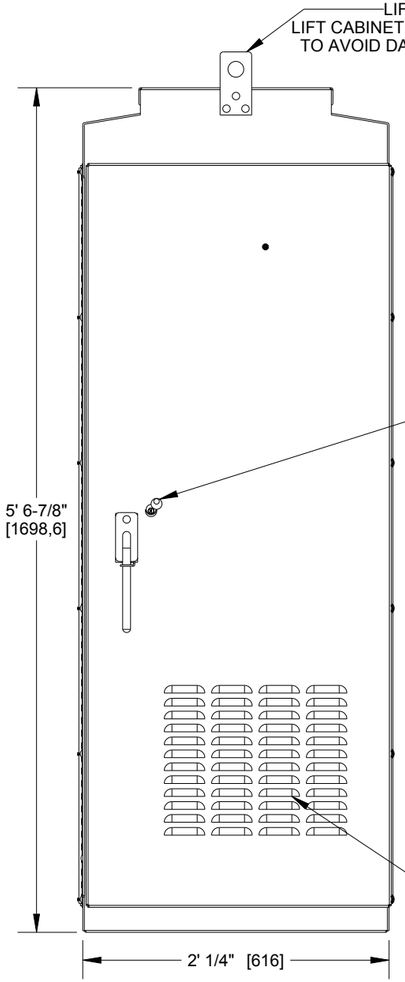


**FRONT VIEW**

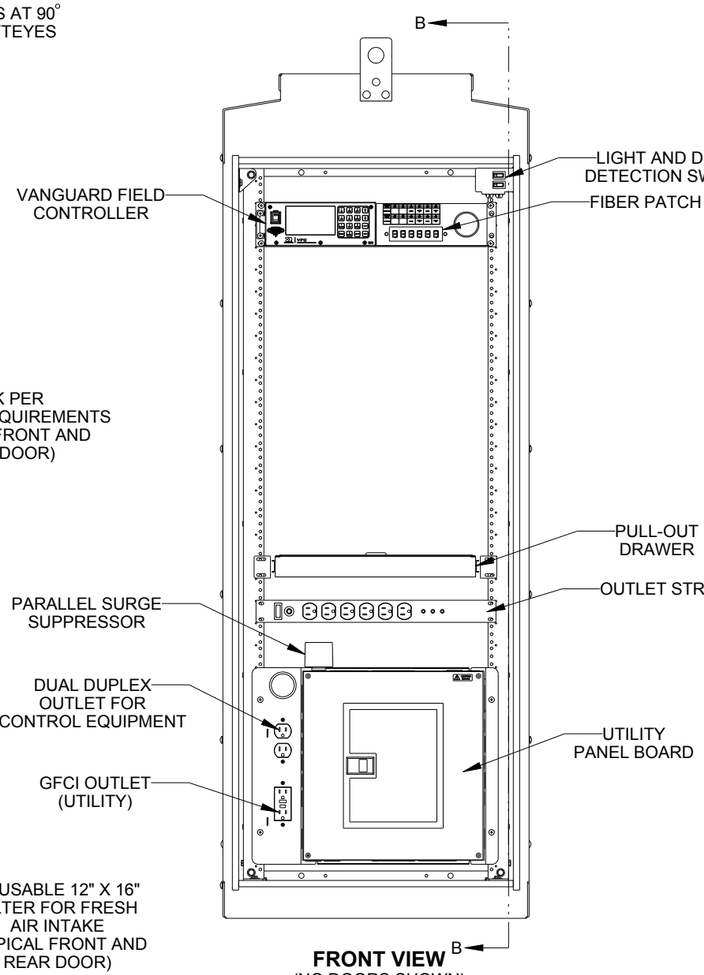


**FRONT VIEW**
(NO DOORS SHOWN)

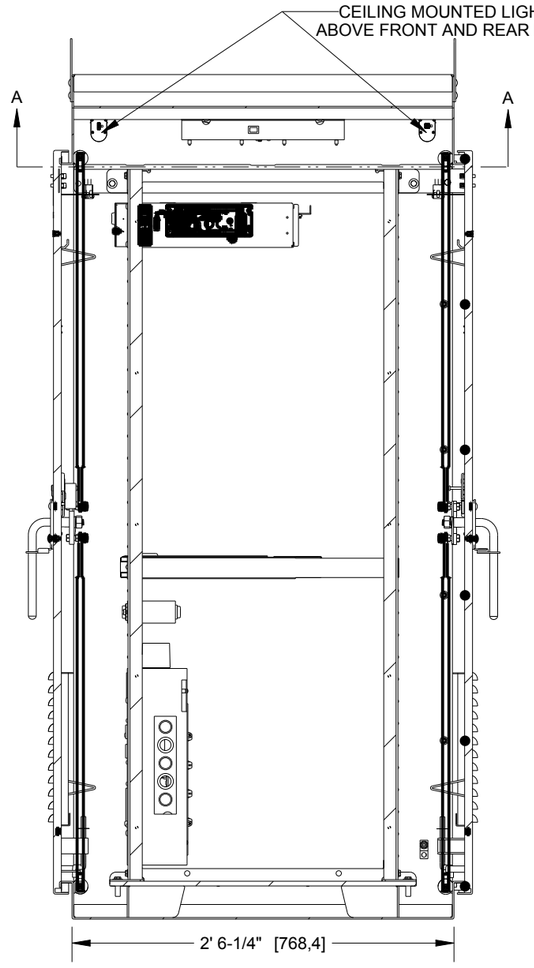


**SECTION B-B**

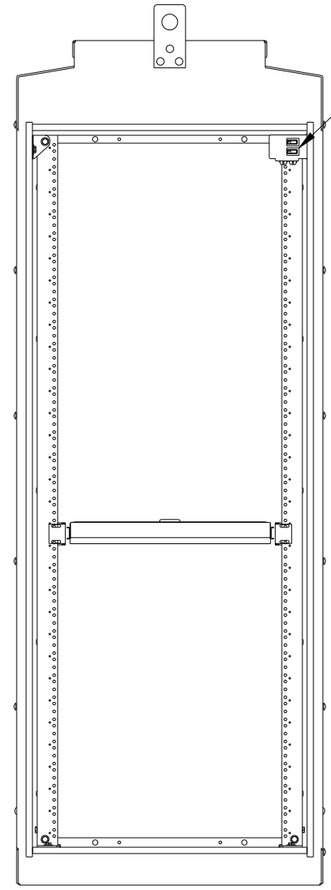


**REAR VIEW**
(NO DOORS SHOWN)

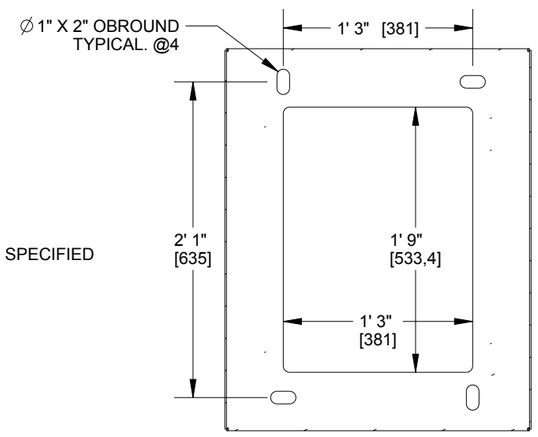


**BOTTOM VIEW**

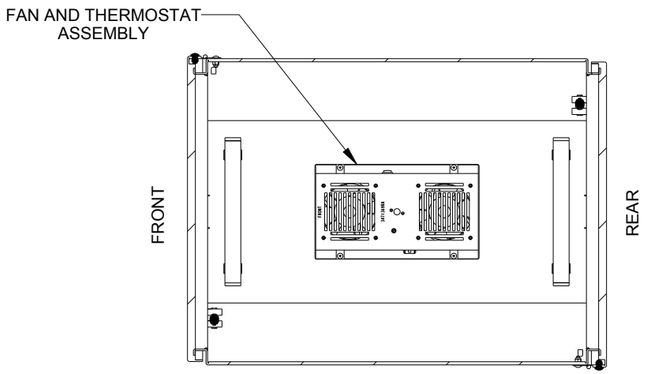


**SECTION VIEW**
SECTION A-A

## TRAFFIC CABINET NOTES:

1. CABINET SPECIFICATIONS:
   - -CABINET TYPE: 334 GROUND MOUNT
   - -ALL DIMENTIONS IN FEET & INCHES [MM], UNLESS OTHERWISE SPECIFIED
   - -0.125" MILL FINISH ALUMINUM 5052-H32 CONSTRUCTION WITH CONTINUOUSLY WELDED EXTERNAL SEAMS
   - -THREE POINT LATCH WITH SST HANDLE
   - -DOUBLE FLANGED DOOR SEAL WITH 1/2" X 2" CLOSED CELL NEOPRENE GASKET
   - -FULL LENGTH EIA GAGE FOR 19" EQUIPMENT
   - -NEMA 3R ENCLOSURE
   - -ALL STAINLESS STEEL HARDWARE WITH FULL LENGTH STAINLESS STEEL HINGE.
   - -DOOR OPENING: 56.750" X 21.750"
2. ALL MODIFICATIONS TO CABINET MUST MAINTAIN NEMA 3R RATING. IF UNSURE, CONTACT DAKTRONICS ENGINEERING FOR APPROVAL.
3. FINAL COMPONENT PLACEMENT MAY CHANGE SLIGHTLY DURING FINAL DESIGN.

| REV | DATE: | | BY: |
|---|---|---|---|

THE CONCEPTS EXPRESSED AND DETAILS SHOWN ON THIS DRAWING ARE CONFIDENTIAL AND PROPRIETARY. DO NOT REPRODUCE BY ANY MEANS WITHOUT THE EXPRESS WRITTEN CONSENT OF DAKTRONICS, INC. OR ITS WHOLLY OWNED SUBSIDIARIES. COPYRIGHT 2016 DAKTRONICS, INC. (USA)

DAKTRONICS

THIRD ANGLE PROJECTION

| | | | | |
|---|---|---|---|---|
| PROJECT: | VANGUARD | | | |
| TITLE: | SHOP DRAWING, TC, 334, ALU, GND, VFC | | | |
| DATE: 13-DEC-16 | DIM UNITS: INCHES [MILLIMETERS] | | SHEET | REV |
| SCALE: 1/12 | DO NOT SCALE DRAWING | | 1 OF 1 | 00 |
| DESIGN: CKOLBEC | JOB NO. | FUNC - TYPE - SIZE | 3433901 | |
| DRAWN: CKOLBEC | P1249 | F - 10 - B | | |

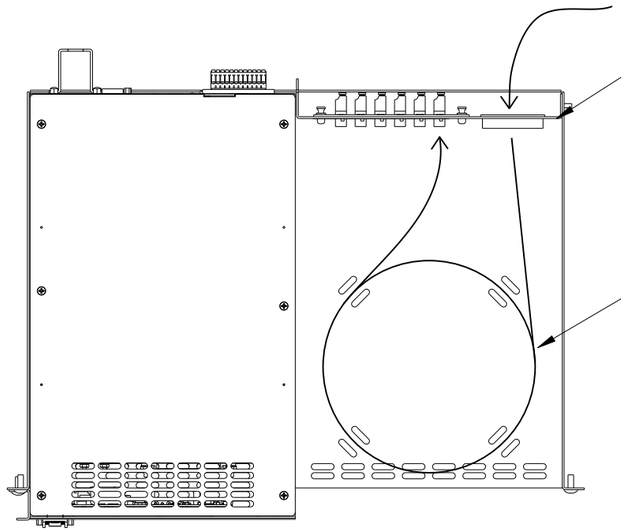


**TOP VIEW**
**1 - VFC IN 19" EIA SHELF**

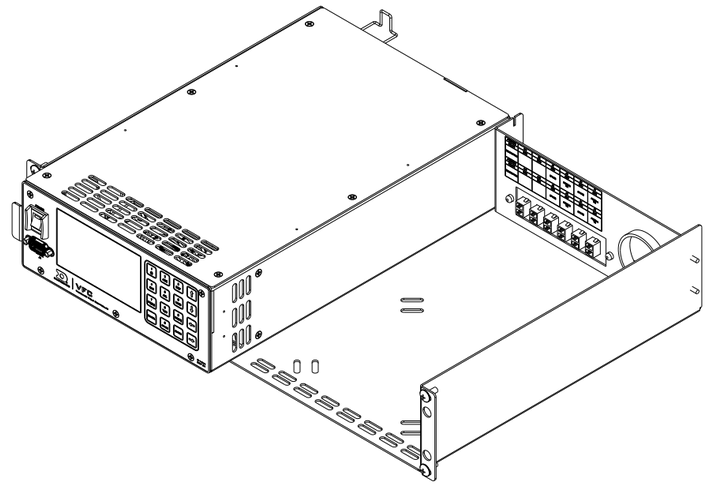

**FRONT ISOMETRIC VIEW**
**1 VFC'S PER SHELF**

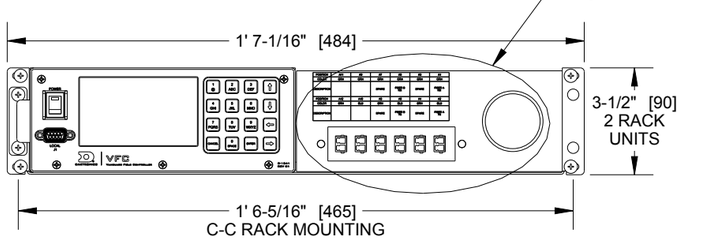


**FRONT VIEW**
**1 - VFC IN 19" EIA SHELF**




**RIGHT SIDE VIEW**

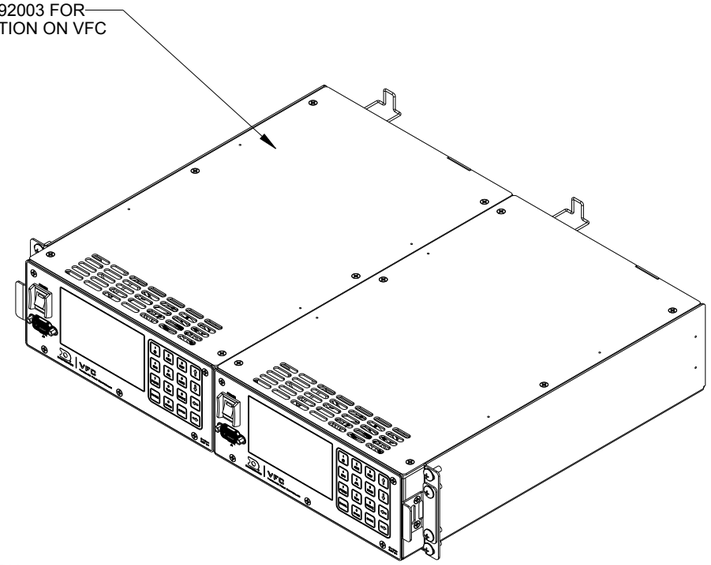


**FRONT ISOMETRIC VIEW**
**TWO VFC'S PER SHELF**

| POSITION | A11 | A9 | A7 | A5 | A3 | A1 |
|---|---|---|---|---|---|---|
| COLOR | GRN | ORN | GRN | ORN | GRN | ORN |
| DESCRIPTION | | | SPARE | FIBER B RX | SPARE | FIBER A RX |
| POSITION | A12 | A10 | A8 | A6 | A4 | A2 |
| COLOR | BRN | BLU | BRN | BLU | BRN | BLU |
| DESCRIPTION | | | SPARE | FIBER B TX | SPARE | FIBER A TX |

12 POSITION FIBER PATCH
PANEL - LC CONNECTORS

FIBER CABLE TO ROUTE THROUGH
BUSHING IN REAR PANEL

DETAIL A
SCALE 3/4

| REV | DATE: | | BY: |
|---|---|---|---|
| | | | |

DAKTRONICS, INC.
BROOKINGS, SD 57006
DO NOT SCALE DRAWING

THE CONCEPTS EXPRESSED AND DETAILS SHOWN ON THIS DRAWING ARE CONFIDENTIAL AND PROPRIETARY. DO NOT REPRODUCE BY ANY MEANS WITHOUT THE EXPRESS WRITTEN CONSENT OF DAKTRONICS, INC.
COPYRIGHT 2015 DAKTRONICS, INC.

PROJ: VANGUARD
TITLE: SHOP DRAWING, VFC, RACK MOUNT, FIBER PATCH PANEL
DESIGN: DKLOSE | DRAWN: DKLOSE | DATE: 11-MAY-15
SCALE: 1=5

| SHEET: | REV | JOB NO: | FUNC-TYPE-SIZE | |
|---|---|---|---|---|
| 1 OF 1 | 00 | P 1248 | F - 10 - B | 3055824 |

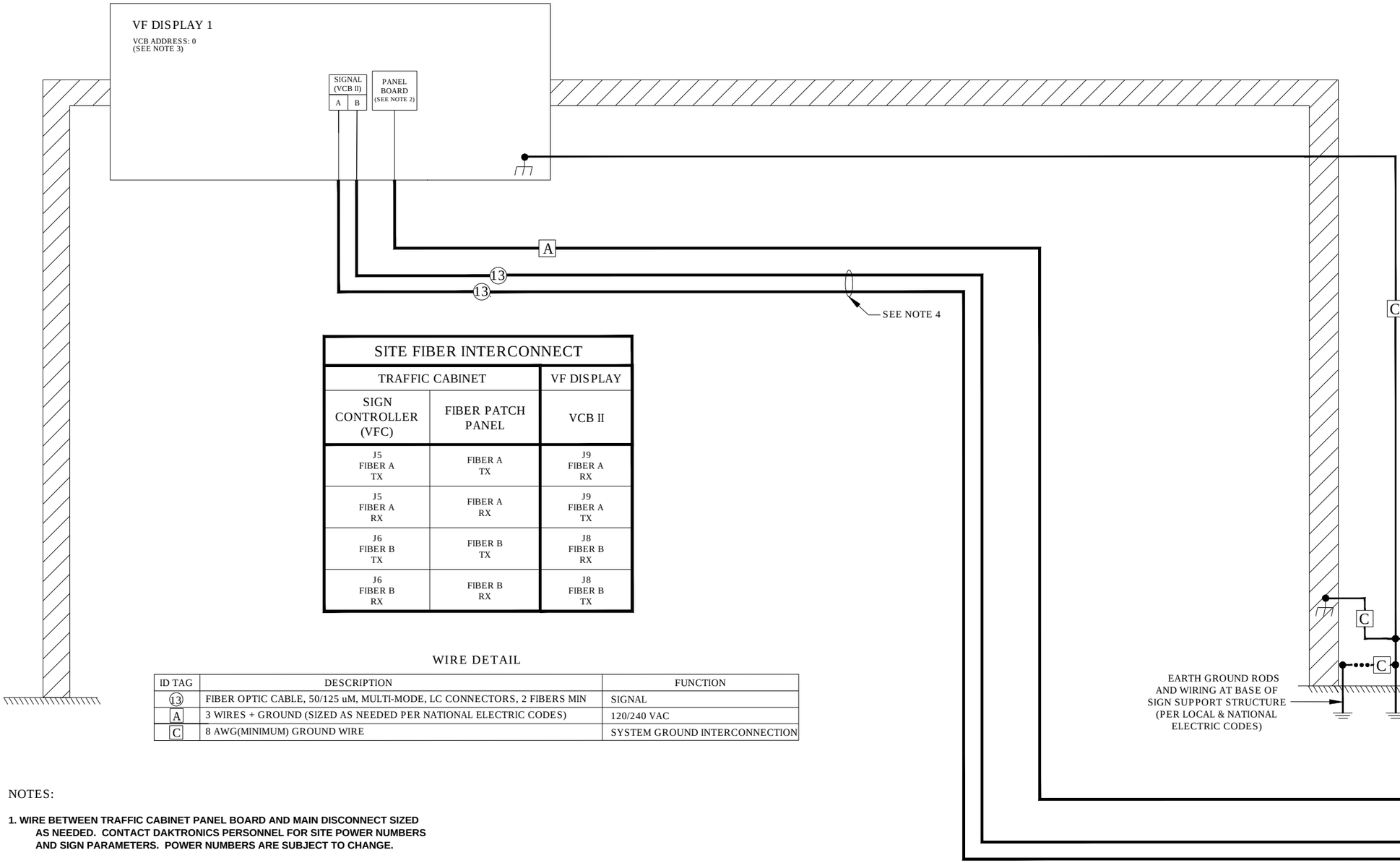





GENERAL NOTES:

IT IS THE RESPONSIBILITY OF THE ELECTRICAL INSTALLATION CONTRACTOR TO ENSURE THAT ALL ELECTRICAL WORK PERFORMED ON SITE MEETS OR EXCEEDS ALL LOCAL AND NATIONAL ELECTRICAL CODES.

## SITE FIBER INTERCONNECT

| TRAFFIC CABINET | | VF DISPLAY |
|---|---|---|
| SIGN CONTROLLER (VFC) | FIBER PATCH PANEL | VCB II |
| J5 FIBER A TX | FIBER A TX | J9 FIBER A RX |
| J5 FIBER A RX | FIBER A RX | J9 FIBER A TX |
| J6 FIBER B TX | FIBER B TX | J8 FIBER B RX |
| J6 FIBER B RX | FIBER B RX | J8 FIBER B TX |

## WIRE DETAIL

| ID TAG | DESCRIPTION | FUNCTION |
|---|---|---|
| 13 | FIBER OPTIC CABLE, 50/125 uM, MULTI-MODE, LC CONNECTORS, 2 FIBERS MIN | SIGNAL |
| A | 3 WIRES + GROUND (SIZED AS NEEDED PER NATIONAL ELECTRIC CODES) | 120/240 VAC |
| C | 8 AWG(MINIMUM) GROUND WIRE | SYSTEM GROUND INTERCONNECTION |

NOTES:

1. **WIRE BETWEEN TRAFFIC CABINET PANEL BOARD AND MAIN DISCONNECT SIZED AS NEEDED. CONTACT DAKTRONICS PERSONNEL FOR SITE POWER NUMBERS AND SIGN PARAMETERS. POWER NUMBERS ARE SUBJECT TO CHANGE.**

2. **DAKTRONICS SUPPLIED PANEL BOARDS IN THE TRAFFIC CABINET AND THE VF-2X20 (DMS) ACCEPTS 6 AWG TO 1 AWG WIRE.**

3. **SEE DISPLAY MANUAL FOR INSTRUCTIONS ON VCB ADDRESSING**

4. **FIBERS MAY BE CONTAINED IN A SINGLE CABLE. DAKTRONICS RECOMMENDS HAVING 1-2 TERMINATED SPARE FIBERS.**

| REV | DATE: | | BY: | |
|---|---|---|---|---|
| 02 | 18 APR 18 | UPDATED FIBER DESCRIPTION IN WIRE DETAIL AND FIBER ROUTING FROM TC TO DMS. ADDED SITEFIBER INTERCONNECT CHART. | WLT | |
| 01 | 27 NOV 17 | UPDATED TITLE. ADDED NOTE 4. | WLT | |

THE CONCEPTS EXPRESSED AND DETAILS SHOWN ON THIS DRAWING ARE CONFIDENTIAL AND PROPRIETARY. DO NOT REPRODUCE BY ANY MEANS WITHOUT THE EXPRESS WRITTEN CONSENT OF DAKTRONICS, INC. OR ITS WHOLLY OWNED SUBSIDIARIES. COPYRIGHT 2018 DAKTRONICS, INC. (USA)

THIRD ANGLE PROJECTION

| | | | | |
|---|---|---|---|---|
| PROJECT: | | | | |
| TITLE: | SITE RISER, 1 VF-2X20, VFC IN TC | | | |
| DATE: 17 JUL 17 | DIM UNITS: INCHES [MILLIMETERS] | | SHEET | REV |
| SCALE: NONE | DO NOT SCALE DRAWING | | | 02 |
| DESIGN: ASHANKS | JOB NO. | FUNC - TYPE - SIZE | 3686201 | |
| DRAWN: ASHANKS | P1993 | F - 10 - B | | |

# Appendix D: Test Procedures

The following submitted test procedures are an example of actual test methods performed in the field during the commissioning process. Daktronics understands each project may have specific needs and requirements therefore; test procedures may be amended following the final approval of the submittal documentation. Due to Daktronics' commitment to overall continuous improvement, processes and procedures may change without written notice or explanation.

1. **DD4105401**: Sample VF-2XXX Field Test Procedure

# Field Test Procedure

## Checklist

**For All Vanguard (NTCIP) Displays with VFC/DMP controllers**

**DD4105401** **Rev: 4 — 13 Mar 2023**

DAKTRONICS

**Contract number:** _____

**Customer name:** _____

**Display Type(s):** _____

**Site Name:** _____

**117 Prince Drive PO Box 5120 Brookings SD 57006**

**tel: 800-833-3157**

DAKTRONICS

**DD4105401**
**Rev: 4 —13 March 2023**

# DAKTRONICS,INC.

**Copyright ❤ 2018**

All rights reserved. While every precaution has been taken in the preparation of this manual, the publisher assumes no responsibility for errors or omissions. No part of this book covered by the copyrights hereon may be reproduced or copie d in any form or by any means—graphic, electronic, or mechanical, including photocopying, taping, or information storage and retrieval systems—without written permission of the publisher.

*Vanguard® is a trademark of Daktronics, Inc. National Electrical Code® and all other trademarks are property of their respective companies*

## Introduction

This checklist documents the field tests for a LED dynamic message sign site for this project. The purpose of this document is to record that all testing has been completed.

**For instructions on how to complete each test reference Field Test Procedure Instructions document**
**DD4105386-FTP Test instruction for all Vanguard Displays**

1- Ensure that you completely fill out the site information page on this checklist.
2- Use the instruction document to correctly complete each test and document results of each test in the corresponding test.
3- This test should be performed for every sign site at the completion of installation of the particular site.
4- The test messages to be used should be the test messages listed or messages such as "Testing; Message 1" or "Testing in Progress", that will not misdirect traffic.

**Test equipment required:**

- Boom truck, or whatever is required to get up into the sign
- Digital multi-meter
- Laptop computer, with vanguard software
- Ethernet Cable
- Common hand tools
- Flash Drive/Memory Stick

# Site Information

Daktronics representative completing the testing: _____

Display assembly #(s): _____

Display serial #(s): _____

Traffic cabinet assembly #: _____

Traffic cabinet serial #: _____

Controller serial #: _____

Controller hardware address #: _____

Controller IP address Primary: _____ Auxiliary: _____

**Important: Make sure that the firmware listed below is the most current version, if not make sure to download the latest version of the firmware from http://dakfiles.daktronics.com/downloads/Transportation/Firmware/.**

Displays dimension(s): _____

| **Firmware:** | **Version number:** |
|---|---|
| 1) VFC | _____ |
| 2) Video Processor | _____ |
| 3) Display Firmware Package | _____ |

**Other Optional firmware (not all displays will have module and Display interface firmware)**

| | |
|---|---|
| 4) Display Module micro | _____ |
| 5) Display Module EPLD | _____ |
| 6) Display interface micro | _____ |
| 7) Display interface EPLD | _____ |

**Display/Cabinet Inspections**

____1. Complete visual inspection of control cabinet and/or display(s) for damage on transport or installation, and verify all equipment mounted properly.
____2. Check that control cabinet and/or display(s) earth grounding is connected properly per the system site riser.
____3. Perform display and/or control cabinet power incoming power verification test
TP1:_____(AC Line to Neutral or DC Termination point in display)
TP2:_____(AC Neutral to Ground or DC last module in display)
____4. Complete cabinet and/or display outlet, ventilation, and, access points checks.
____5. Complete fan thermostat update.
____6. Complete controller setup and firmware updates.
____7. Perform Test Pattern testing.
____8. Complete display signal and/or pixel testing.
____9. Verify all Peripherals are reporting and working correctly:
Date:_____Time:_____Sky Conditions:_____Dimming level_____
i) Document all light sensor include name and value (ex. Light Line 1= 853).
_____
_____
_____
ii) Document all temp and humidity readings (ex. controller temp = 80F).
_____
_____
_____

____10. Run test message following NTCIP test message procedure.
____11. Record all firmware version numbers and site information.
____12. Complete Quality feedback form
____13. Reinstall all enclosure covers and close all doors

It is acknowledged that the following field test procedure has been completed for this site and the display is operational.

**Daktronics Technician**

_____ _____ _____
Printed Name Signature Date

**Customer**

_____ _____ _____
Printed Name Signature Date

DAKTRONICS PERSONNEL MUST RETURN THIS COMPLETED DOCUMENT AND QUALITY FEED BACK FORM TO THE DAKTRONICS PROJECT MANAGER.

## Transportation Quality Feedback form

*For Internal Daktronics use only. This is not part of the field Test Procedure. This form needs field out and sent back to Daktronics with the Field Test Procedures*

Submitted By_______ Contract#_____

Display Type (i.e. VF2400_27x105-66-A) _____

Location of Display_____

Display Serial #_____ nearest City and State _____

Commissioning Date_____ Project Manager_____

Did you experience any issues or unplanned work during the commission of this display? **Yes/No** (if no skip to additional comments/Punch list items)

| Failed Part Description | Part Number | Part Serial # |
|---|---|---|
| | | |
| | | |
| | | |
| | | |
| | | |

**Describe the issues and or unplanned work**

_____

_____

_____

_____

_____

_____

_____

**Additional Comments/Punch list Items**

_____

_____

_____

_____

_____

_____

_____

FTP completed **Yes/No**

Site Complete **Yes/No** (if no documents punch list items above)

# Maine Turnpike Authority

# Interchange VMS Replacement

## Dynamic Message Signs
## Daktronics Contract # C35670

Technical Submittal

***DD5936967*** ***Rev 0*** ***27 July 2026***

DAKTRONICS

For Sidemount Signs

**117 Prince Drive PO Box 5120 Brookings SD 57006**
**tel 605-697-4958 800-833-3157 fax 605-697-4444**
**www.daktronics.com transportationhelp@daktronics.com**

DAKTRONICS

**DD5936967**
**C35670**
**Rev 0 – 27 July 2026**

DAKTRONICS, INC.

**Copyright © 2026**
All rights reserved. While every precaution has been taken in the preparation of this manual, the publisher assumes no responsibility for errors or omissions. No part of this book covered by the copyrights hereon may be reproduced or copied in any form or by any means—graphic, electronic, or mechanical, including photocopying, taping, or information storage and retrieval systems—without written permission of the publisher.

*Vanguard® is a registered trademark of Daktronics, Inc. All others are trademarks of their respective companies.*

# Table of Contents

**Section 1: Introduction ..... 4**

1.1 Daktronics Project Team ..... 4
1.2 Proposed Vanguard Sign ..... 4
1.3 Proposed Traffic Cabinet ..... 4

**Appendix A: Catalog Cuts ..... 7**

A.1 VF-2X20- RGB Sign ..... 7
A.2 Traffic Cabinet ..... 7

**Appendix B: Drawings ..... 9**

**Appendix C: NTCIP Testing ..... 11**

**Appendix D: Test Procedures ..... 13**

# Section 1: Introduction

This is a dynamic message sign (DMS) technical submittal prepared for the Vanguard® DMS model which is the sign Daktronics proposes to supply. DMS, sign controller, and control software specifications comprise separate chapters of this submittal. Please refer to the **Table of Contents** for the location of specifications, drawings, and other supporting documentation.

## 1.1 Daktronics Project Team


| | |
|---|---|
| Project Manager: | Mike Weber |
| Phone Number: | 605-691-1008 |
| Email Address: | mike.weber@daktronics.com |
| | |
| Sales Lead: | Michael Welsh |
| Phone Number: | 516-909-6692 |
| Email Address: | michael.welsh@daktronics.com |
| | |
| Applications Engineer: | Glen Wiebe |
| Phone Number: | 225-364-7173 |
| Email Address: | glen.wiebe@daktronics.com |


## 1.2 Proposed Vanguard Sign

1. VF-2420-80x272-20-RGB……. **VF-2420-80x272-Spec Sheet**

    - The DMS will have an Auxiliary Control Panel, ACP.
    - The DMS will have 2 Zee Brackets per AASHTO requirements.
    - The DMS will have an equipment cabinet that will house the sign controller, VFC.
    - The Traffic Cabinet will be supplied by Daktronics.
    - Fiber Optic Cable and ends will be provided by Others.

## 1.3 Proposed Traffic Cabinet

1. 334 Ground Mount..... **DD1683856**

    - The traffic cabinet will have LED lights.

# DAKTRONICS PRODUCT SPECIFICATION

## SERIES SPECIFICATION

### VF-2420-80x272-20-RGB

| | |
|---|---|
| **Face Panel** | Aluminum mask over polycarbonate face panel |
| **Pixel Pitch** | 20mm |
| **Operating Temp. Range** | -30° F to 165° F (-34° C to 74° C) |
| **Humidity Range** | 0 to 99%, non-condensing |
| **Ventilation** | Positive pressure, forced-air, filtered system |
| **Color Capability** | Full-color RGB (32,000+ colors) |
| **Brightness - Typical Nits** | 12,400 |
| **Viewing Angle** | 30° |
| **Power** | 120-240 VAC single phase (3-wire plus ground) |
| **Controller Location** | External Controller |
| **Control Protocol** | NTCIP, UTMC, and other protocols by request. |
| **Cummunications options** | Cellular, fiber, direct Ethernet and radio Ethernet |
| **Structural Design Standard** | NEMA 3R |
| **Cabinet Enclosure Standard** | AASHTO |
| **NEMA Compliance** | NEMA TS-4, Section 2 Environmental Standards |

Note 1: Consistent with Daktronics policy of continuing product improvement, specifications shown on this document are subject to change without notice.
Note 2: See contract specific drawings for customized product weights
Note 3: Other protocols available. Please consult your Daktronics representative.
Note 4: Display cabinet depth measurement includes "Z" mounting brackets on the rear of the cabinet.
Note 5: Face panel and border will be black. Rear of display is mill finish aluminum.
Note 6: Amps per leg calculation is based on the maximum load of a typical DMS, not including other options.
Note 7: Typical power includes a partially-illuminated LED sign (38% of the RGB pixels at full intensity), the sign controller, and ventilation system.

## DISPLAY SPECIFICATION

| | |
|---|---|
| **Overall Cabinet Size (HxWxD)** | 6'9" x 18'11"x 1'4" |
| **Matrix Size (HxW)** | 80 Pixels x 272 Pixels |
| **Display Weight** | 1410 lbs |
| **Total Maximum Power Consumed (Amps per Leg)** | 18 |
| **Typical Power Consumed (Watts)** | 1153 |

201 Daktronics Drive PO Box 5128 Brookings, SD 57006-5128
800-325-8766 605-692-0200 fax 605-697-4700
www.daktronics.com email sales@daktronics.com
Copyright © 2021 Daktronics

# VANGUARD® 334 EQUIPMENT CABINET

| | |
|---|---|
| Cabinet Construction | Aluminum 5052-H32 with continuously welded external seams |
| Access | Three-point latch with stainless steel handle, two sides |
| Weight | 275 lbs. (125 kg) empty |
| Cabinet Dimensions | 5'6" H x 2'0" W x 2'6" D (1.68 m x 0.61 m x 0.76 m) |
| Cabinet Lock[2] | Corbin #2 |
| Door Opening Dimensions | 4'6" H x 1'10" W (1.37 m x 0.56 m) |
| Access Doors | Sealed with 0.5" x 2" closed-cell neoprene gasket |
| Ventilation | Positive-pressure, forced-air ventilation |
| Controller | VFC |
| Environmental Rating | NEMA 3R |
| Lighting | Fluorescent lamp in top of cabinet |
| Power Requirements | 120/240 VAC, single-phase power (3-wire plus ground) |
| Equipment Rack | EIA 19" rack, 32 Rackmount Units (RU) |
| Standard Equipment | Support shelf<br>Slide-out drawer<br>RU 12-position outlet strip<br>12-position panel board<br>Door Handle includes a hasp for external padlocking |



NOTES

1. Consistent with Daktronics continuous improvement program, all product features are subject to change without notice.
2. Although this equipment cabinet comes standard with a Corbin #2 lock, other locks can be provided in accordance with customer specifications.
3. Although this equipment cabinet comes in a standard mill finish, it can be painted in accordance with customer specifications.

117 Prince Drive PO Box 5120 Brookings, SD 57006
tel 800-833-3157 605-692-0200 x57060 fax 605-697-4700
www.daktronics.com/its email transportation@daktronics.com
Copyright © 2021 Daktronics DD1683856 Rev07 021221

DAKTRONICS

# Appendix A: Catalog Cuts

## A.1 VF-2X20- RGB Sign

1. Light Emitting Diode (LED), 30-degree Cree 3-in-1 package RGB
2. Ventilation Fan—Mechatronics UF15PC12
3. DMS Ventilation Filter Media – Fiber Bond – Merv 6
4. Load Center – Square D QO120M100P
5. Circuit Breakers – Square D QO115HM, QO120HM, and QO230 **(VF-2420 and TC)**
6. Surge Protector— nVent
7. Power Supply – 500W
8. Auxiliary Control Panel

## A.2 Traffic Cabinet

9. VFC Controller, VFC
10. Fiber Optic Cable and LC Connecter (Recommendations only. Provided by others)
11. Load Center - Square D QO112M100P
12. Ventilation Fan—Mechatronics UF12A12BTHR
13. Filter – AMF Series
14. Traffic Cabinet Lights

**Notes:** Components may change from supplier to supplier based upon product and component life cycle and availability. Form, fit, and functionality will be maintained as products and components are updated.

# Cut Sheet 1

# CV94D-FCC: PLCC6 3 in 1 SMD LED



## PRODUCT DESCRIPTION

This SMD LED features an IPx8 water resistant rating in a PLCC6 package. These high performance tricolor SMT LEDs are designed to work in a wide range of applications.

The encapsulation resin contains UV inhibitors to minimize the effects of long-term exposure to direct sunlight, resulting in stable light output over the life of the LED. This PLCC6 package has an increased package height to ease in the manufacturing process.

## FEATURES

- Size (mm): 9.4 x 4.2 x 4.0
- Dominant Wavelength
  Red (619 - 624nm)
  Green (520 - 540nm)
  Blue (460 - 480nm)
- Luminous Intensity (mcd)
  Red (3550 - 9000)
  Green (7100 - 18000)
  Blue (1400 - 3550)
- Water-Resistant (IPx8)*
- Moisture Sensitivity Level: 5a
- Lead-Free
- RoHS Compliant

## APPLICATIONS

- Transportation and road way signs
- Channel Letter
- Amusement

*:This part is tested under the condition of assembling it on a PCB with isolating the electrical path by silicone. The leads area of the LED is not IPx8 rated and it's required to insulate for moisture by customer in outdoor application.

Cree LED / 4400 Silicon Drive / Durham, NC 27703 USA / +1.919.313.5330 / www.cree-led.com

© 2021 Cree LED. The information in this document is subject to change without notice. Cree® and the Cree logo are registered trademarks, and the Cree LED logo is a trademark, of Cree, Inc.

## ABSOLUTE MAXIMUM RATINGS ($T_A$ = 25°C)

| Items | Symbol | Absolute Maximum Rating | | | Unit |
|---|---|---|---|---|---|
| | | R | G | B | |
| Forward Current Note 1 | $I_F$ | 50 | 35 | 35 | mA |
| Peak Forward Current Note 2 | $I_{FP}$ | 100 | 100 | 100 | mA |
| Reverse Voltage | $V_R$ | 5 | 5 | 5 | V |
| Power Dissipation | $P_D$ | 140 | 126 | 126 | mW |
| Operation Temperature | $T_{opr}$ | -40 ~ +85 | | | °C |
| Storage Temperature | $T_{stg}$ | -40 ~ +100 | | | °C |
| Junction Temperature | $T_J$ | 110 | 110 | 110 | °C |
| Junction/ambient | $R_{THJA}$ | 350 | 380 | 300 | °C/W |
| Junction/solder point | $R_{THJS}$ | 160 | 200 | 140 | °C/W |
| Electrostatic Discharge Classification(MIL-STD-883E) | ESD | 1000V | | | |

Note:

1. Single-color light
2. Pulse width ≤0.1 msec, duty ≤1/10.

## TYPICAL ELECTRICAL & OPTICAL CHARACTERISTICS ($T_A$ = 25°C)

| Characteristics | Condition | Symbol | Values | | | Unit |
|---|---|---|---|---|---|---|
| | | | R | G | B | |
| Dominant Wavelength | $I_F$ = 20mA | $\lambda_{DOM}$ | 619~624 | 520~540 | 460~480 | nm |
| Spectral bandwidth at 50% $I_{REL}$ max | $I_F$ = 20mA | $\Delta\lambda$ | 24 | 38 | 28 | nm |
| Forward Voltage | $I_F$ = 20mA | $V_{F(avg)}$ | 2.1 | 2.8 | 2.9 | V |
| | | $V_{F(max)}$ | 2.8 | 3.6 | 3.6 | V |
| Luminous Intensity | $I_F$ = 20mA | $I_{V(min)}$ | 3550 | 7100 | 1400 | mcd |
| | | $I_{V(avg)}$ | 6000 | 12000 | 2300 | mcd |
| Reverse Current (max) | $V_R$ = 5 V | $I_R$ | 10 | 10 | 10 | μA |

* Continuous reverse voltage can cause LED damage.

© 2021 Cree LED. The information in this document is subject to change without notice. Cree® and the Cree logo are registered trademarks, and the Cree LED logo is a trademark, of Cree, Inc.

## INTENSITY BIN LIMIT

| Red (20 mA) | | | Green (20 mA) | | | Blue (20 mA) | | |
|---|---|---|---|---|---|---|---|---|
| Bin Code | Min.(mcd) | Max.(mcd) | Bin Code | Min.(mcd) | Max.(mcd) | Bin Code | Min.(mcd) | Max.(mcd) |
| Yb | 3550 | 4500 | B0 | 7100 | 9000 | Wb | 1400 | 1800 |
| Z0 | 4500 | 5600 | C0 | 9000 | 11200 | Xa | 1800 | 2240 |
| A0 | 5600 | 7100 | D0 | 11200 | 14000 | Xb | 2240 | 2800 |
| B0 | 7100 | 9000 | E0 | 14000 | 18000 | Ya | 2800 | 3550 |

* Tolerance of measurement of luminous intensity is ±10%.

## COLOR BIN LIMIT

| Red (20 mA) | | | Green (20 mA) | | | Blue (20 mA) | | |
|---|---|---|---|---|---|---|---|---|
| Bin Code | Min.(nm) | Max.(nm) | Bin Code | Min.(nm) | Max.(nm) | Bin Code | Min.(nm) | Max.(nm) |
| RB | 619 | 624 | G7 | 520 | 525 | B3 | 460 | 465 |
| | | | G23 | 522.5 | 527.5 | B23 | 462.5 | 467.5 |
| | | | G8 | 525 | 530 | B4 | 465 | 470 |
| | | | G45 | 527.5 | 532.5 | B45 | 467.5 | 472.5 |
| | | | G9 | 530 | 535 | B5 | 470 | 475 |
| | | | G67 | 532.5 | 537.5 | B67 | 472.5 | 477.5 |
| | | | Ga | 535 | 540 | B6 | 475 | 480 |

* Tolerance of measurement of dominant wavelength is ±1 nm.

© 2021 Cree LED. The information in this document is subject to change without notice. Cree® and the Cree logo are registered trademarks, and the Cree LED logo is a trademark, of Cree, Inc.

## ORDER CODE TABLE

| Kit Number | Color | Luminous Intensity (mcd) | | Dominant Wavelength (nm) | | | | Package |
|---|---|---|---|---|---|---|---|---|
| | | Min. | Max. | Color Bin | Min.(nm) | Color Bin | Max. (nm) | |
| CV94D-FCC-CYbB0B0E0WbYaBB7a363 | Red | 3550 | 9000 | RB | 619 | RB | 624 | Reel |
| | Green | 7100 | 18000 | G7 | 520 | Ga | 540 | Reel |
| | Blue | 1400 | 3550 | B3 | 460 | B6 | 480 | Reel |
| CV94D-FCC-CYb2B02Wb2BB7D3D3 | Red | Any 2 Intensity bin from Yb(3550) - B0(9000) | | RB | 619 | RB | 624 | Reel |
| | Green | Any 2 Intensity bin from B0(7100) - E0(18000) | | Any 1 hue bin from G7(520)-Ga(540) | | | | Reel |
| | Blue | Any 2 Intensity bin from Wb(1400) - Ya(3550) | | Any 1 hue bin from B3(460)-B6(480) | | | | Reel |

Notes:

- The above kit numbers represent order codes that include multiple intensity-bin and color-bin codes. Only one intensity-bin code and one color-bin code will be shipped on each bulk. Single intensity-bin code and single color-bin codes will not be orderable.
- Please refer to the HB LED Lamp Reliability Test Standards document for reliability test conditions.
- Please refer to the HB LED Lamp Soldering & Handling document for information about how to use this LED product safely.

© 2021 Cree LED. The information in this document is subject to change without notice. Cree® and the Cree logo are registered trademarks, and the Cree LED logo is a trademark, of Cree, Inc.

## GRAPHS

The data below are collected from statistical figures that do not necessarily correspond to the actual parameters of each single LED. Hence, these data will be changed without further notice.

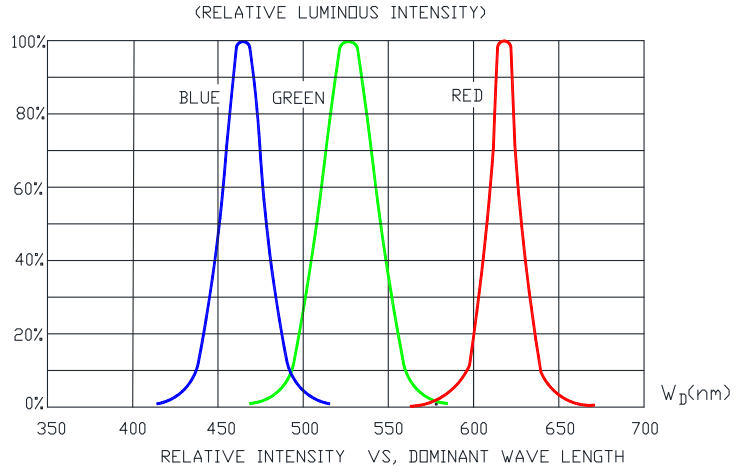


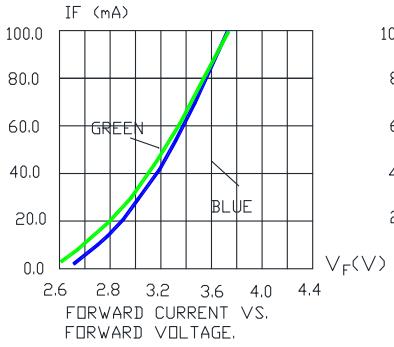


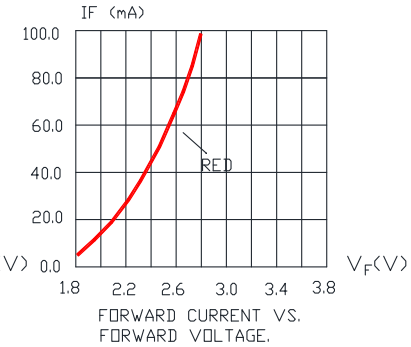


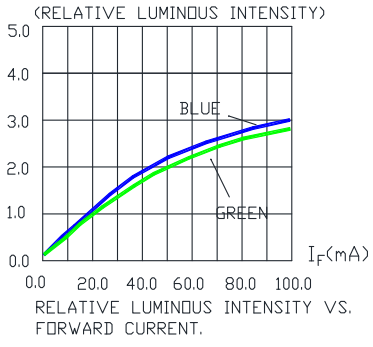


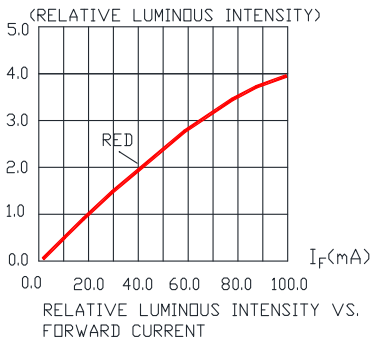


© 2021 Cree LED. The information in this document is subject to change without notice. Cree® and the Cree logo are registered trademarks, and the Cree LED logo is a trademark, of Cree, Inc.

## GRAPHS

The data below are collected from statistical figures that do not necessarily correspond to the actual parameters of each single LED. Hence, these data will be changed without further notice.

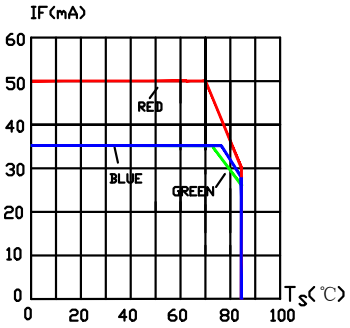


MAXIMUM FORWARD DC CURRENT
VS, SOLDER POINT TEMPERATURE.

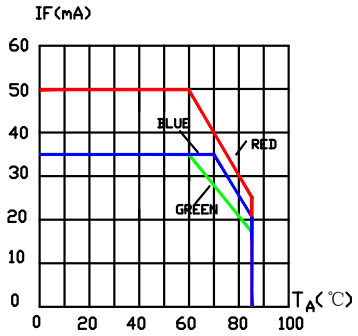


MAXIMUM FORWARD DC CURRENT
VS, AMBIENT TEMPERATURE.

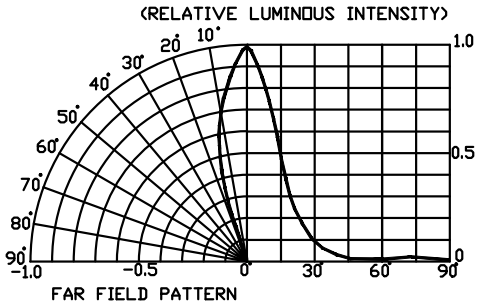


FAR FIELD PATTERN

© 2021 Cree LED. The information in this document is subject to change without notice. Cree® and the Cree logo are registered trademarks, and the Cree LED logo is a trademark, of Cree, Inc.

## MECHANICAL DIMENSIONS

All dimensions are in mm.

Tolerance of measurement of the dimension is ±0.1.

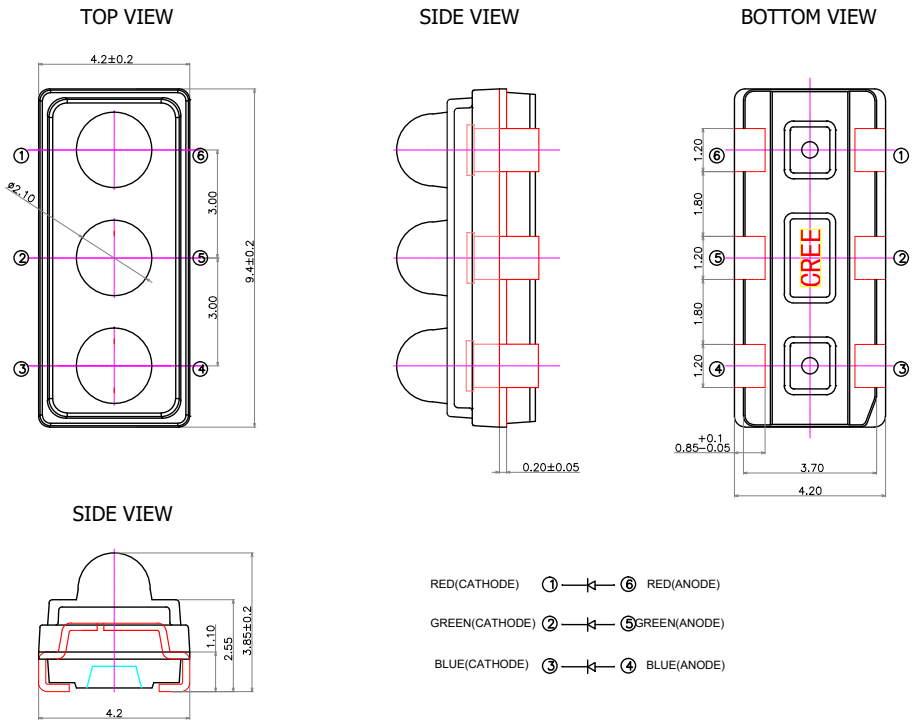


## NOTES

**RoHS Compliance**

The levels of RoHS restricted materials in this product are below the maximum concentration values (also referred to as the threshold limits) permitted for such substances, or are used in an exempted application, in accordance with EU Directive 2011/65/EC (RoHS2), as implemented January 2, 2013. RoHS Declarations for this product can be obtained from your Cree LED representative or from the Product Ecology section of the Cree LED website.

**Vision Advisory**

WARNING: Do not look at an exposed lamp in operation. Eye injury can result.

© 2021 Cree LED. The information in this document is subject to change without notice. Cree® and the Cree logo are registered trademarks, and the Cree LED logo is a trademark, of Cree, Inc.

## KIT NUMBER SYSTEM

Cree LED lamps are tested and sorted into performance bins. A bin is specified by ranges of color, forward voltage, and brightness.

Cree LEDs are sold by order codes in combinations of bins called kits. Order codes are configured in the following manner:

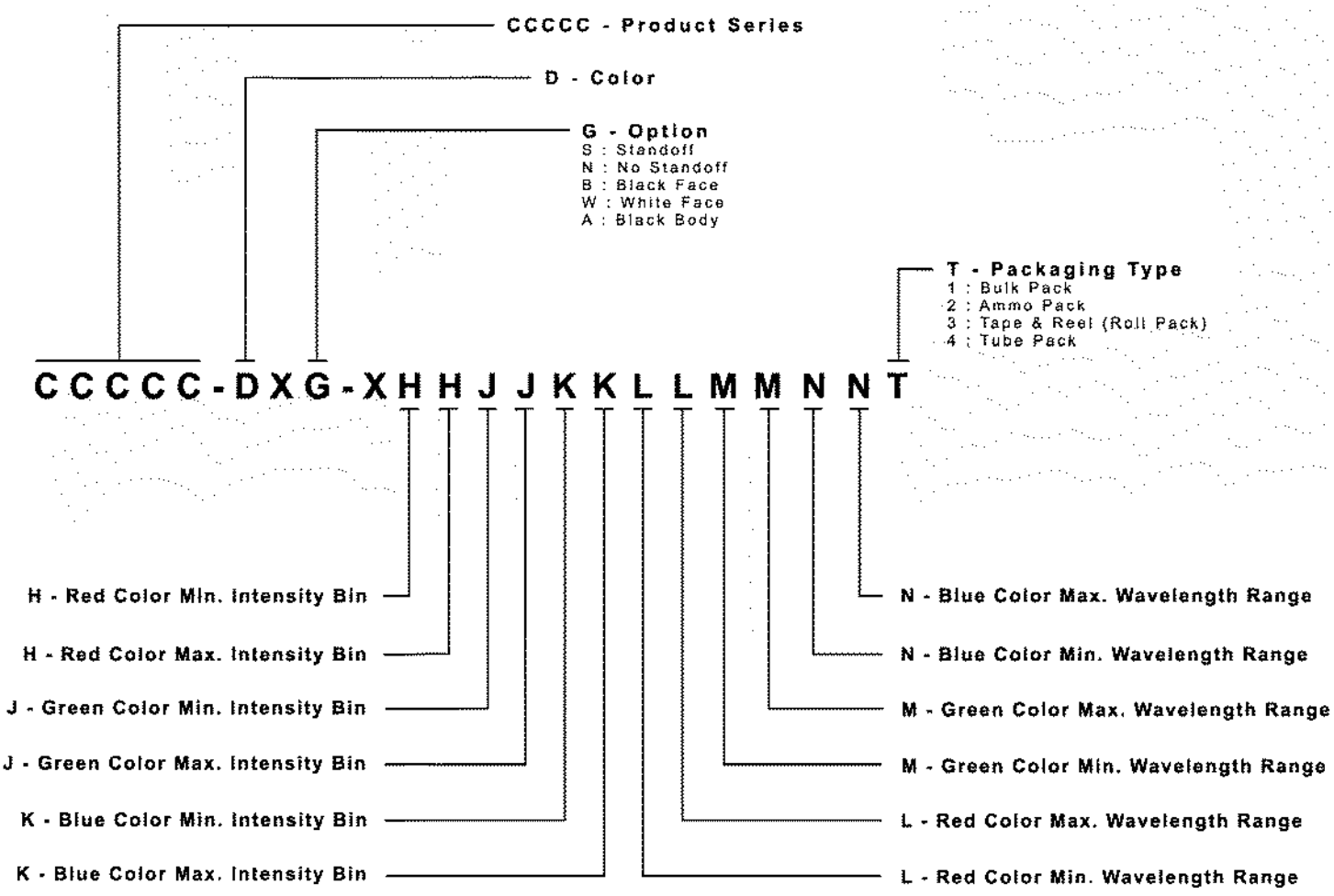


© 2021 Cree LED. The information in this document is subject to change without notice. Cree® and the Cree logo are registered trademarks, and the Cree LED logo is a trademark, of Cree, Inc.

## REFLOW SOLDERING

- The CV94D-FCC is rated as a MSL 5a product.
- The recommended floor life out of bag is 24hrs.
- The temperature profile is as below

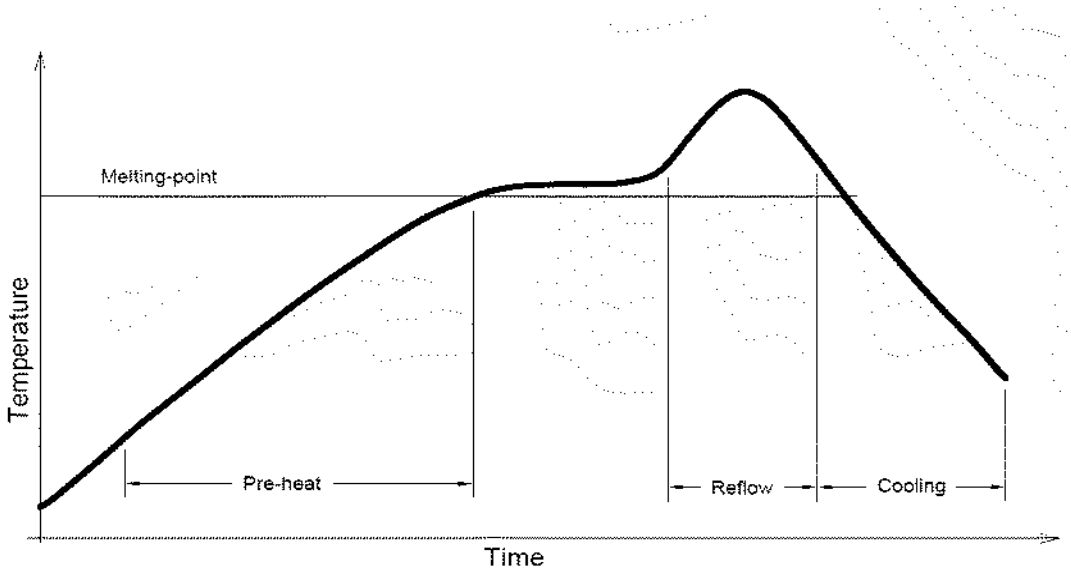


Use only with CV94D-FCC

| Solder |
|---|
| Average ramp-up rate = 4°C/s max |
| Preheat temperature = 150°C ~200°C |
| Preheat time = 120s max |
| Ramp-down rate = 6°C/s max |
| Peak temperature = 250°C max |
| Time within 5°C of actual Peak Temperature = 10s max |
| Duration above 217°C is 60s max |

## NOTES

- The packaging sizes of these SMD products are very small and the resin is still soft after solidification. Users are required to handle with care. Never touch the resin surface of SMD products.
- To avoid damaging the product's surface and interior device, it is recommended to choose a special nozzle to pick up the SMD products during the process of SMT production. If handling is necessary, take special care when picking up these products. The following method is necessary:

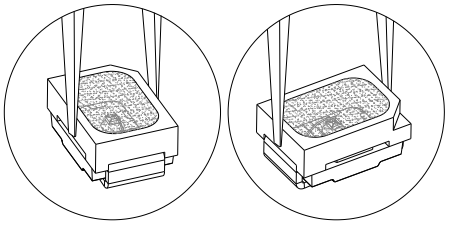

© 2021 Cree LED. The information in this document is subject to change without notice. Cree® and the Cree logo are registered trademarks, and the Cree LED logo is a trademark, of Cree, Inc.

## PACKAGING

- The boxes are not water resistant and they must be kept away from water and moisture.
- The LEDs are packed in cardboard boxes after packaging in normal or anti-electrostatic bags.
- Cardboard boxes will be used to protect the LEDs from mechanical shocks during transportation.
- The reel pack is applied in SMD LED.
- Max 1200 pcs per reel.

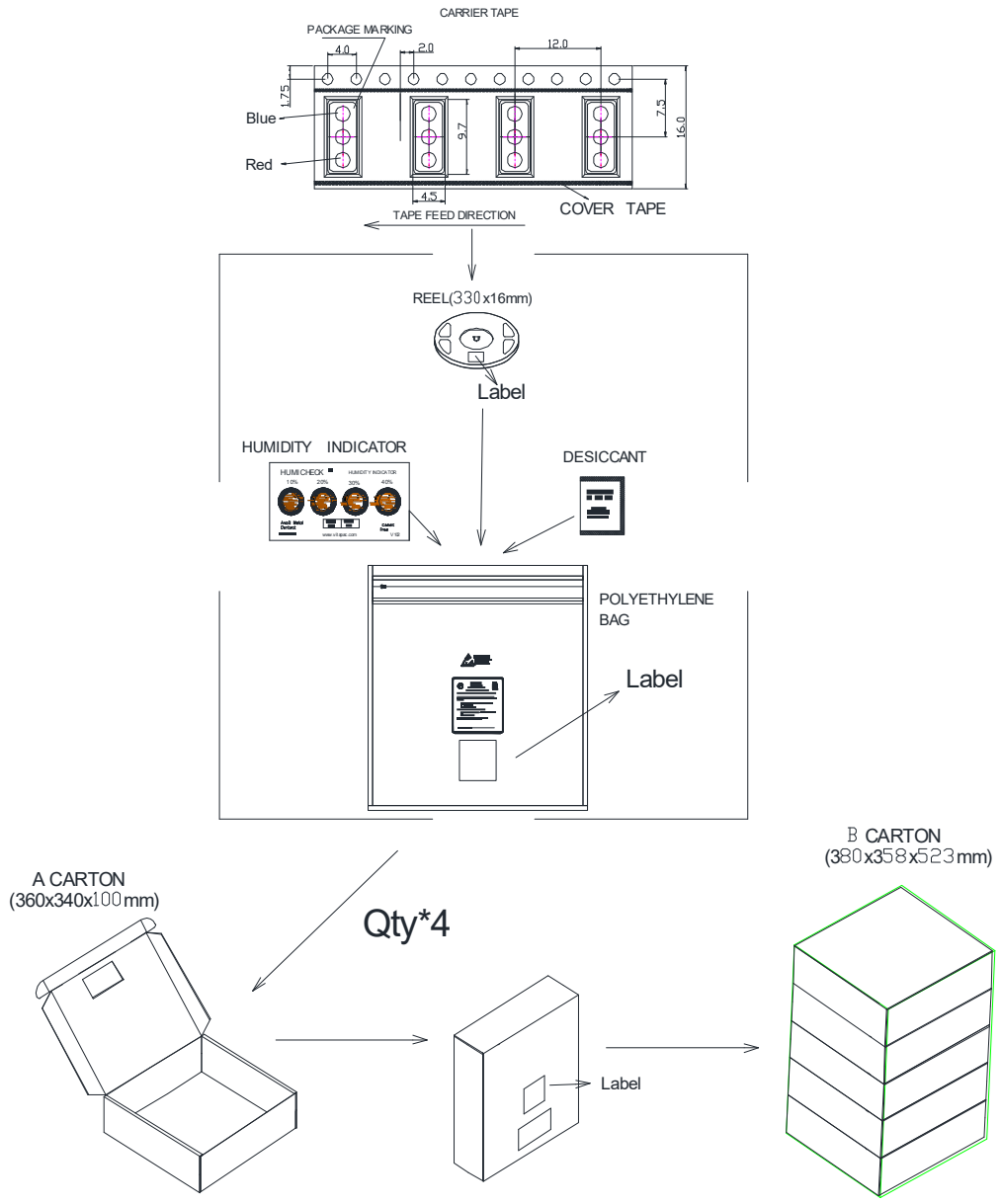


© 2021 Cree LED. The information in this document is subject to change without notice. Cree® and the Cree logo are registered trademarks, and the Cree LED logo is a trademark, of Cree, Inc.

# Mouser Electronics

Authorized Distributor

Click to View Pricing, Inventory, Delivery & Lifecycle Information:

Cree LED:

CV94D-FCC-CYB2B02WB2BB7D3D3 CV94D-FCC-CYBB0B0E0WBYABB7A363

# Cut Sheet 2

# UF15PC series



**(172 x 150 x 51 mm)**
6.77 x 5.91 x 2.0 inches

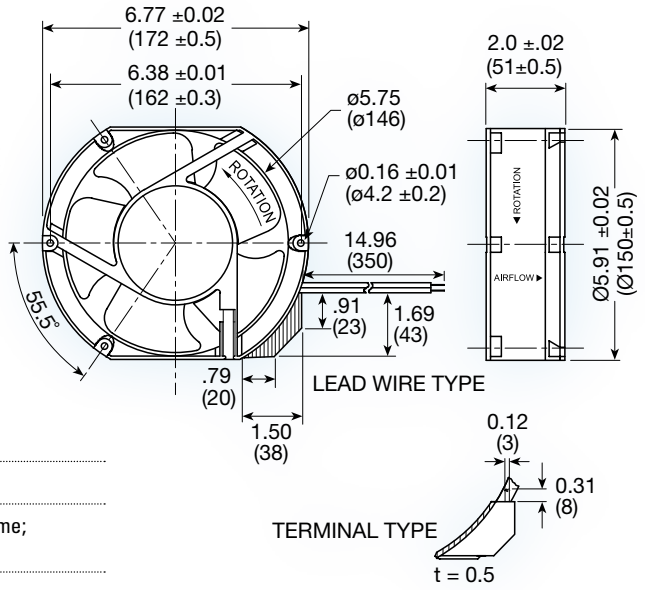


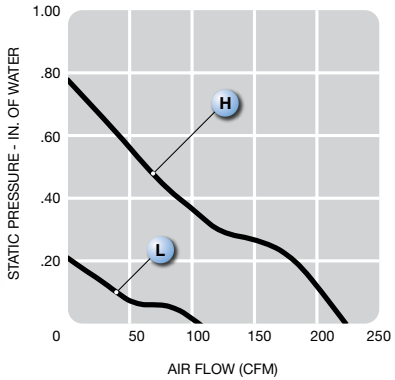


| | |
|---|---|
| Operating voltage: | 115 or 230 VAC |
| Construction: | aluminum die cast frame; UL94V-0 PBT impeller |
| Bearing option: | ball bearing |
| Motor: | permanent split capacitor |
| Air Flow: | exhaust over struts |
| Connection: | terminal or 22 AWG lead wire |
| Protection: | thermal |
| Option: | dual voltage 115/130VAC; IP55; IP55 + salt fog, tachometer output |

| Model No. | Rated Voltage | Freq. | Input Power | Rated Cur. | Locked Cur. | Speed | Air Volume | | Max. Static Pressure ($H_2O$) | | Sound Noise | Weight |
|---|---|---|---|---|---|---|---|---|---|---|---|---|
| | V | HZ | W | A | A | RPM | M³/Min. | CFM | MM | INCH | dbA | kg |
| **UF15PC12-__H** | 115 | 60 | 31 | 0.25 | 0.43 | 3,400 | 6.4 | 226 | 20.0 | 0.79 | 58 | 0.80 |
| **UF15PC23-__H** | 230 | 60 | 29 | 0.12 | 0.19 | 3,400 | 6.4 | 226 | 20.0 | 0.79 | 58 | 0.80 |
| **UF15PC12-__L** | 115 | 60 | 31 | 0.15 | 0.20 | 1,700 | 3.0 | 106 | 5.5 | 0.22 | 37 | 0.80 |
| **UF15PC23-__L** | 230 | 60 | 29 | 0.07 | 0.09 | 1,700 | 3.0 | 106 | 5.5 | 0.22 | 37 | 0.80 |

# Cut Sheet 3

# Rigid Pad Filter Media
## MERV 6 • Spor-Ax® Antimicrobial

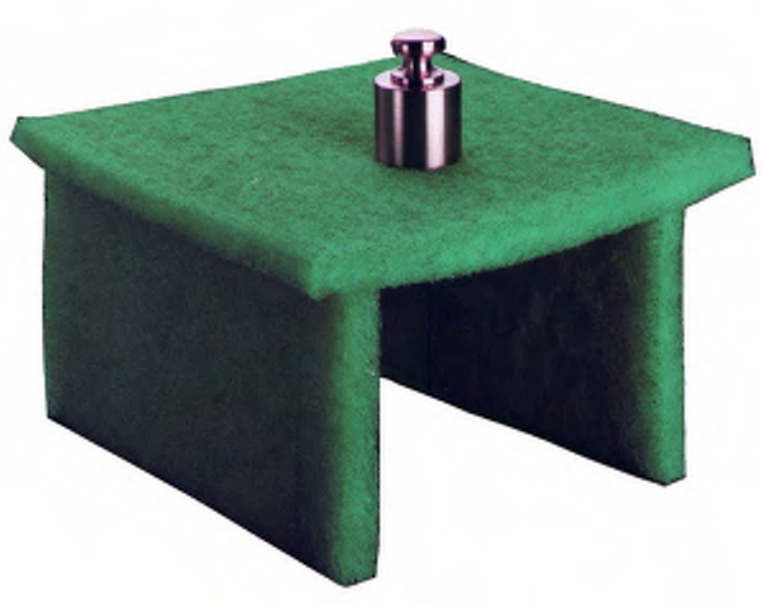

## Rigid Pad Filter Media

- Spor-Ax® Antimicrobial
- MERV 6
- Available in 25” x 48” and 36” x 48” sheets - packed flat in cartons
- Easily cut with scissors, paper cutter or band saw for instant custom sizes.
- Durable, rigid construction

### Cut-To-Size, Ready To Use

## Rigid Pad

Fiber Bond’s Rigid Pad combines strength, ease-of-use and economy in one synthetic media. It’s the perfect solution when an *instant* filter is needed.

**Custom Sizes Made Easy**
A sheet of Rigid Pad can easily be cut to provide a custom filter. No reason to rely on flimsy throw aways or costly 1” pleats.

**Spor-Ax Antimicrobial Keeps Filter Media Free From Mold, Mildew, Algae & Fungi**
Fiber Bond’s Spor-Ax antimicrobial is part of the manufacturing process, not a costly, post-application. The elimination of microbial growth helps extend service life.

FIBER BOND
110 Menke Road, Michigan City, IN 46360 ● Phone (219) 879-4541 ● Fax (219) 874-7502
Email: customer.service@fiberbond.net ● www.fiberbond.net

FIBER BOND

The **Best** Filters Begin With The **Best** Media



# Rigid Pad Filter Technical Data

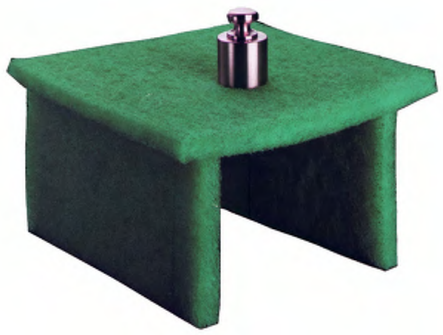

## Rigid Pad Filter Media

**Filter Media:** Polyester/Viscose
**Initial Resistance**: 0.14" w.g. at 295 fpm
**Flammability:** UL 900 Classified
**Performance:** MERV 6 in accordance with independent test method ASHRAE 52.2-2007
**Recommended Final Resistance:** 0.60" w.g.
**Maximum Operating Temperature:** 200° F

## Rigid Pad Filter Media Specifications

Media shall be comprised of polyester and viscose fibers. The media shall exhibit exceptional rigidity through the entire structure.

The media shall be green in color.

The media shall contain Spor-Ax® antimicrobial which effectively controls microbial growth on the filter media.

The media shall be MERV 6 as tested by ASHRAE Standard 52.2- 2007.

Independent test results in accordance with ASHRAE 52.2-2007

Fiber Bond has a policy of continuous product research and improvement and reserves the right to alter design and specifications without notice.
September 2017

**Rigid Pad Filter Media Resistance vs Air Flow**

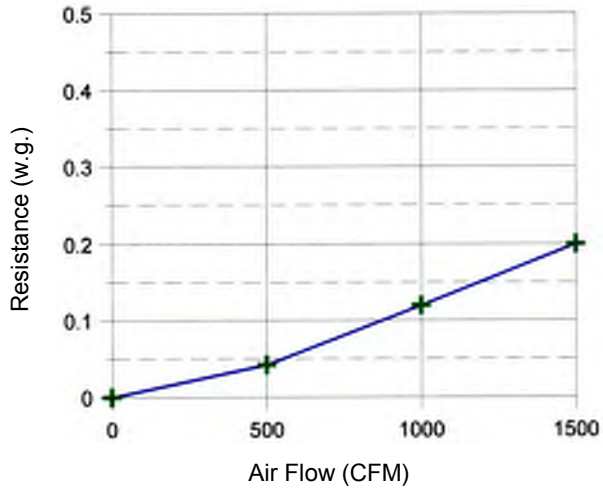


**Rigid Pad Filter Media Removal Efficiency vs Particle Size**

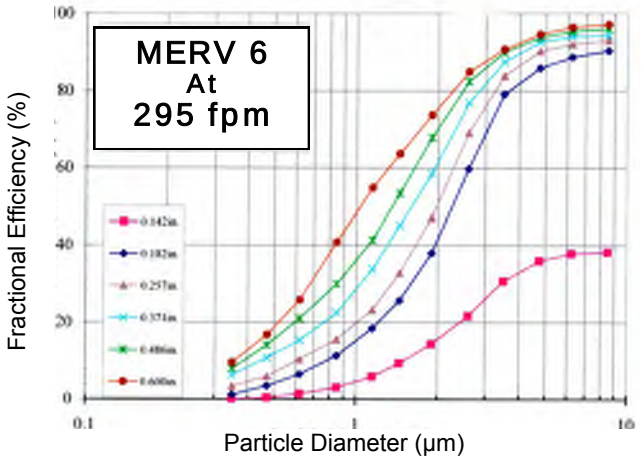


110 Menke Road, Michigan City, IN 46360 ● Phone (219) 879-4541 ● Fax (219) 874-7502
Email: customer.service@fiberbond.net ● www.fiberbond.net

# Cut Sheet 4

# Product data sheet
## Characteristics

# QO120M100P
Load center, QO, 1 phase, 20 spaces, 20 circuits, 100A convertible main breaker, PoN, NEMA, UL



## Main

| | |
|---|---|
| Marketing Trade Name | QO |
| Product | Load Center |

## Complementary

| | |
|---|---|
| Tightening torque | Cover 20 lb.in |
| Load Center Type | Main breaker |
| Line Rated Current | 100 A |
| Number of spaces | 20 |
| Short Circuit Current Rating | 22 kA |
| Maximum Number of Single Pole Circuits | 20 |
| Maximum Number of Tandem Breakers | 4 |
| Number of Phases | 1 phase |
| Box number | 6 |
| Maximum Height | 17.92 in (455.17 mm) |
| Maximum Width | 14.25 in (361.95 mm) |
| Maximum Depth | 3.75 in (95.25 mm) |

## Environment

| | |
|---|---|
| Enclosure Rating | NEMA 1 |
| Ambient air temperature for operation | 23 °F (-5 °C)<br>104 °F (40 °C) |
| Product certifications | UL Listed |

## Ordering and shipping details

| | |
|---|---|
| Category | 10001 - QO PON 1PH LC,12-60 CKT, MB N1 |
| Discount Schedule | DE3A |
| GTIN | 00785901609476 |
| Nbr. of units in pkg. | 1 |
| Package weight(Lbs) | 1 lb(US) (0.45 kg) |
| Returnability | Yes |

The information provided in this documentation contains general descriptions and/or technical characteristics of the performance of the products contained herein.
This documentation is not intended as a substitute for and is not to be used for determining suitability or reliability of these products for specific user applications.
It is the duty of any such user or integrator to perform the appropriate and complete risk analysis, evaluation and testing of the products with respect to the relevant specific application or use thereof.
Neither Schneider Electric Industries SAS nor any of its affiliates or subsidiaries shall be responsible or liable for misuse of the information contained herein.

## Approximate Dimensions

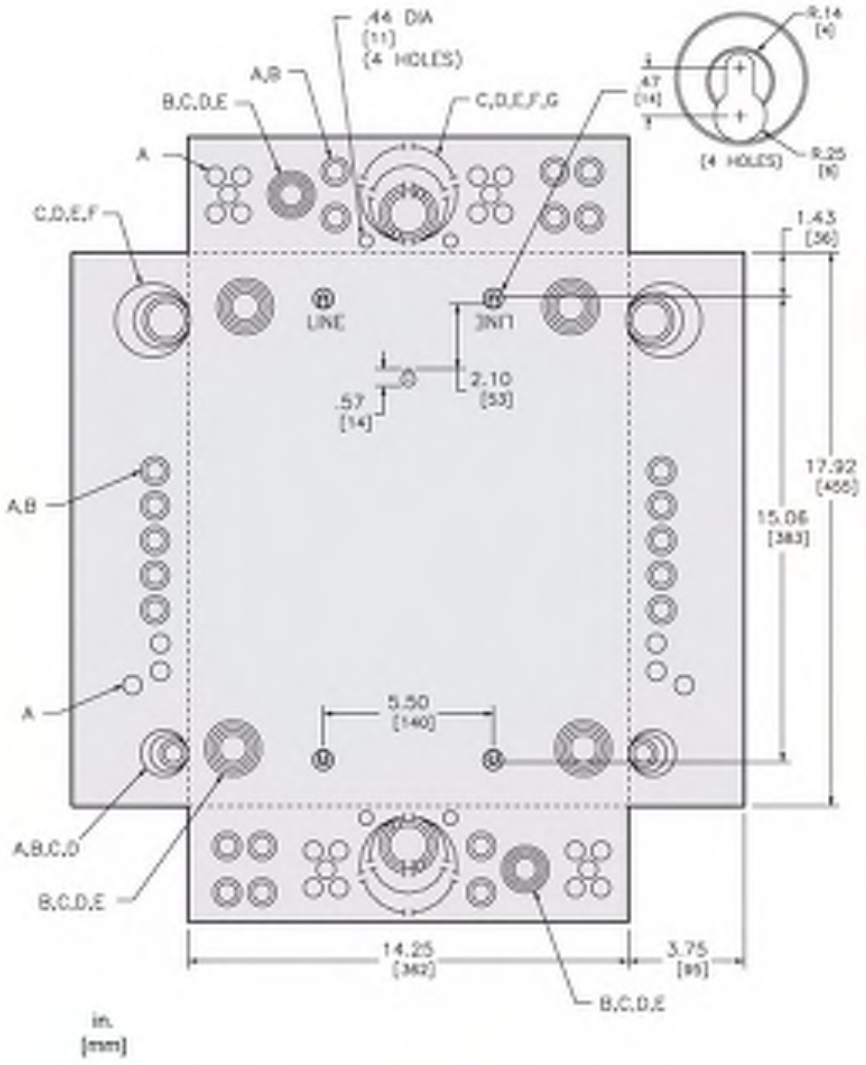


| KNOCKOUTS | | | | | | | |
|---|---|---|---|---|---|---|---|
| SYMBOL | A | B | C | D | E | F | G |
| IN | .50 | .75 | 1.00 | 1.25 | 1.50 | 2.00 | 2.50 |
| MM | 13 | 19 | 25 | 32 | 38 | 51 | 64 |

## Connections and Wiring Diagrams

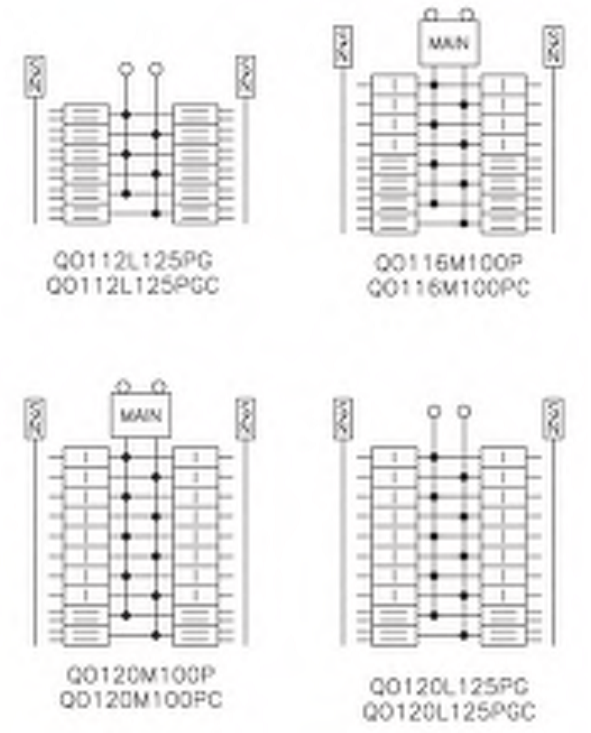

# Cut Sheet 5

# QO® and QOB
## Miniature Circuit Breakers

Class 730




**CONTENTS**

**Description** . . . . . **Page**
General Description and Ratings . . . . . 3
Special Application Circuit Breakers . . . . . 7
Accessories . . . . . 15
Trip Curves . . . . . 18
Dimensions . . . . . 35
Glossary . . . . . 38

SQUARE D
GROUPE SCHNEIDER

## GENERAL DESCRIPTION

Underwriters Laboratories Inc. (UL), the National Electrical Manufacturers Association (NEMA) and the National Electrical Code (NEC) define a circuit breaker as "A device designed to open and close a circuit by non-automatic means, and to open the circuit automatically at a predetermined overcurrent without injury to itself when properly applied within its rating."

### QO® and QOB Circuit Breakers

QO® (plug-on) and QOB (bolt-on) one-, two- and three-pole thermal-magnetic circuit breakers provide overcurrent protection and switching on ac and dc systems. Plug-on QO circuit breakers are for use in QO load centers, NQOD panelboards or SPEED-D® switchboard distribution panels. Bolt-on QOB circuit breakers are for use in NQOD panelboards.

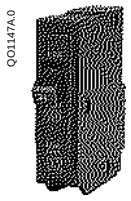

One-pole QO
Circuit Breaker

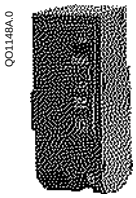

Two-pole QO
Circuit Breaker

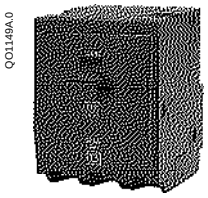

Three-pole QO
Circuit Breaker

### Operating Mechanism

QO and QOB circuit breakers have an overcenter, trip-free toggle mechanism with quick-make, quick-break action and positive handle indication. The tripping mechanisms in two- and three-pole circuit breakers operate such that an overcurrent on any pole of the circuit breaker will cause all poles of the circuit breaker to open simultaneously. Each pole has an individual thermal-magnetic trip element calibrated for 40°C ambient temperature**.**

### Trip Indication

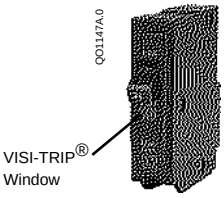


QO and QOB circuit breakers have VISI-TRIP® trip indication which provides a visual identification that the circuit breaker has tripped and interrupted the circuit. When the circuit breaker has tripped, the handle assumes a center position and the red VISI-TRIP indicator appears in a window in the circuit breaker case. The VISI-TRIP is only visible when the circuit breaker has tripped. Trip indication immediately distinguishes the circuit from any other circuit which is merely in the on or off position. The circuit breaker can be reset by pushing the handle to OFF and then to ON.

### Construction Standards

QO and QOB circuit breakers are built in accordance with UL Standard 489, CSA 22, NOM/ANCE and NEMA Standard AB1. They also meet Federal Specification W-C-375B/GEN. The 10–70 ampere circuit breakers are UL Listed as Type QO or Type QOB under UL File E84967 and are CSA Certified under File LR92886. The 80–100 ampere circuit breakers are UL Listed as Type QO or Type QOB under UL File E84967 and CSA Certified under File LR92886.


© 1998 Square D All Rights Reserved

## RATINGS

When designing an electrical distribution system, overcurrent protective devices are generally selected based on performance requirements. Factors influencing this selection include system voltage, continuous current, interrupting rating and frequency.

### Voltage Rating

The circuit breaker must have a voltage rating greater than, or equal to, the system voltage. When a circuit breaker clears an overcurrent, it is done in two steps. First, the current sensing system identifies the overcurrent and releases the tripping mechanism. This results in a parting of the contacts. The circuit breaker must then extinguish the voltage arc across the contacts. If the circuit breaker has the correct voltage rating, it can efficiently extinguish this voltage arc. QO and QOB circuit breakers are rated in the following UL Standard 489 voltages:

- 120 Vac
- 208/120 Vac
- 120/240 Vac
- 240 Vac
- 48 Vdc (10-70 A circuit breakers only)

### Interrupting Rating

The interrupting rating of a circuit breaker is the highest current at rated voltage that the circuit breaker is intended to interrupt under standard test conditions. Circuit breakers must be chosen so that the interrupting rating is equal to or greater than the maximum available short-circuit current at the point where the circuit breaker is applied in the system. See the table on the following page.


© 1998 Square D All Rights Reserved

## Interrupting Rating

QO115HM
QO120HM
QO230

| Circuit Breaker Type | Number of Poles | Ampere Rating | UL Listed Interrupting Rating—RMS Sym. Amperes | | | |
|---|---|---|---|---|---|---|
| | | | AC Volts | | | DC Volts* |
| | | | 120 Vac | 120/240 Vac | 240 Vac | 48 Vdc |
| QO<br>QOB | 1 | 10–70 | 10 kA | 10 kA | NA | 5 kA |
| | | 80–100 | 10 kA | 10 kA | NA | NA |
| | 2 | 10–70 | 10 kA | 10 kA | NA | 5 kA |
| | | 80–100 | 10 kA | 10 kA | NA | NA |
| | 3 | 15–60 | 10 kA | 10 kA | 10 kA | 5 kA |
| | | 70–100 | 10 kA | 10 kA | 10 kA | NA |
| QO-H▼<br>QOB-H▼ | 2 | 15–100 | 10 kA | 10 kA | 10 kA | NA |
| QO-VH<br>QOB-VH | 1 | 15–30 | 22 kA | 22 kA | NA | NA |
| | 2 | 15–100 | 22 kA | 22 kA | NA | NA |
| | 3 | 15–100 | 22 kA | 22 kA | 22 kA | NA |
| QOH | 2 | 40–125 | 42 kA | 42 kA | NA | NA |
| QH<br>QHB | 1 | 15–30 | 65 kA | 65 kA | NA | NA |
| | 2 | 15–30 | 65 kA | 65 kA | NA | NA |
| | 3 | 15–30 | 65 kA | 65 kA | 65 kA | NA |
| QO-GFI<br>QOB-GFI | 1 | 15–30 | 10 kA | NA | NA | NA |
| | 2 | 15–60 | 10 kA | 10 kA | NA | NA |
| QO-AFI | 1 | 15–20 | 10 kA | NA | NA | NA |
| QO-EPD<br>QOB-EPD | 1 | 15–30 | 10 kA | NA | NA | NA |
| | 2 | 15–30 | 10 kA | 10 kA | NA | NA |
| QO-VHGFI<br>QOB-GFI | 1 | 15–30 | 22 kA | NA | NA | NA |
| QO-PL | 1 | 15–30 | 10 kA | 10 kA | NA | NA |
| | 2 | 15–30 | 10 kA | 10 kA | NA | NA |
| | 3 | 15–30 | 10kA | 10 kA | 10 kA | NA |

*DC ratings do not apply to circuit breakers rated 10 amperes.
NA = Not applicable.
10,000 A and 5,000 A are 1Ø–3Ø.
▼ UL Listed 5,000 AIR on three-phase grounded B-phase.

## DC Voltage Rating

QO and QOB circuit breakers are available with a UL Listed 48 Vdc rating. See the table above. Refer to Square D Application Guide SD361R1 and Square D Product Data Bulletin D-453 for additional information on dc-rated circuit breakers.

## Frequency Rating

The standard rated frequency for circuit breakers is 60 Hz. Circuit breakers are also rated for dc applications as in the table above. Many Square D circuit breakers can also be applied on 50 Hz systems without derating. GFCI, AFCI and EPD devices are rated for 60 Hz operation only. Frequencies can affect the thermal, magnetic and short-circuit characteristics of circuit breakers. Refer to Square D Application Guide SD361R1 before applying circuit breakers on systems at frequencies other than 50/60 Hz.

## IEC Rating

IEC rated QO circuit breakers are available. For further information contact a Square D Field Sales Office.


© 1998 Square D All Rights Reserved

## TERMINOLOGY

### HACR

HACR is a term used to designate circuit breakers which have been certified to be used on heating, air conditioning and refrigeration loads. QO Type circuit breakers meet the requirements of Paragragh 7.7 in the 9th edition of the UL Standard and are suitable for group motor applications requiring HACR listing.

This means these circuit breakers can be used to meet the requirements of Article 430 of the NEC. This article indicates that each circuit breaker must be of the inverse time type and be approved for group installation.

QO and QOB circuit breakers, except GFI, AFI and EPD, are Listed with UL as HACR Type and are labeled accordingly.

Other 120/240 and 240 Vac circuit breakers which can be supplied with the HACR label are:

- QO-HM and QOB-HM
- QO-VH and QOB-VH
- QO-H and QOB-H
- QOH
- QH and QHB
- QO-PL and QOB-PL

### Terminations

The 10–30 ampere circuit breakers have pressure plate terminals suitable for two-wire copper terminations. QO-GFI 15–30 ampere and QO-AFI circuit breakers have pressure plate terminals suitable for single-wire terminations. These circuit breakers are suitable for use with 60°C or 75° C conductors.

The QO-PL and 35–150 ampere circuit breakers have box-type lugs suitable for single-wire terminations. These circuit breakers are suitable for use with 75°C conductors. See table below.

| Circuit Breaker Types | Ampere Rating | Wire Size (AWG/kcmil) | |
|---|---|---|---|
| | | Aluminum | Copper |
| QO | 10, 25, 30<br>15, 20<br>35–70<br>80–125 | #12–#8 (4–6 $mm^2$)<br>#12–#8 (4–6 $mm^2$)<br>#8–#2 (10–25 $mm^2$)<br>#12–#2/0 (4–50 $mm^2$) | #14–#8 (2.5–5 $mm^2$)<br>(2) #14–#10 (2.5–4 $mm^2$)<br>#8–#2 (10–25 $mm^2$)<br>#12–#2/0 (4–50 $mm^2$) |
| QO-VH | 110–125 | #12–#2/0 (4–50 $mm^2$) | #12–#2/0 (4–50 $mm^2$) |
| QOB-VH | 110–150 | #4–300 (25–150 $mm^2$) | #4–300 (25–150 $mm^2$) |
| QOT, QO-AFI | 15–20 | #12–#8 (4–6 $mm^2$) | #14–#8 (2.5–5 $mm^2$) |
| QO-GFI | 15–30<br>40, 50, 60 | #12–#8 (4–6 $mm^2$)<br>- - - - - | #14–#8 (2.5–5 $mm^2$)<br>#8–#4 (10–$mm^2$) |
| QO-PL | 15–30 | #12–#2 (4–25 $mm^2$) | #14–#2 (2.5–25 $mm^2$) |
| QOH, QOVH, QO-H | 40–100<br>80–125 | #12–#2/0 (4–50 $mm^2$) | #12–#2/0 (4–50 $mm^2$) |


© 1998 Square D All Rights Reserved

## SPECIAL APPLICATION CIRCUIT BREAKERS

There are several special application circuit breakers in the QO family. This section describes them and provides application information for their use. The following list includes the circuit breakers discussed in this section.

- QO-HM and QOB-HM High-magnetic Circuit Breakers
- QO-HID and QOB-HID Circuit Breakers
- QO and QOB Miniature Switches
- QOK and QOBK Key-operated Circuit Breakers
- QO-GFI and QOB-GFI QWIK-GARD® Circuit Breakers
- QO-EPD and QOB-EPD Equipment Protection Devices
- QO-SWN and QOB-SWN Switch Neutral Circuit Breakers
- QOT Tandem Circuit Breakers
- QO-PL and QOB-PL POWERLINK® Circuit Breakers
- QO-AFI Arc-D-tect™ Circuit Breakers

### QO-HM and QOB-HM High Magnetic Circuit Breakers

QO-HM and QOB-HM high-magnetic circuit breakers are recommended for area lighting (athletic fields, parking lots, outdoor signs, etc.) when using lamps of inherent high inrush current, individual dimmer applications or other applications where high inrush current exceeds standard tripping conditions. These circuit breakers are available in one-pole 15 and 20 amperes only. QO-HM and QOB-HM circuit breakers are physically interchangeable with standard QO and QOB circuit breakers and accommodate the complete range of QO accessories.

### QO-HM and QOB-HM Circuit Breaker Magnetic Hold Levels

| One-pole QO-HM and QOB-HM Circuit Breakers | Maximum Full Cycle Magnetic Hold Level |
|---|---|
| 15 amperes | 315 to 525 amperes |
| 20 amperes | 322 to 537 amperes |

QO-HM and QOB-HM circuit breakers are manufactured with the magnetic trip point calibrated at a much higher level than standard QO and QOB circuit breakers. The table above lists the magnetic trip levels to which high-magnetic circuit breakers are calibrated.


© 1998 Square D All Rights Reserved

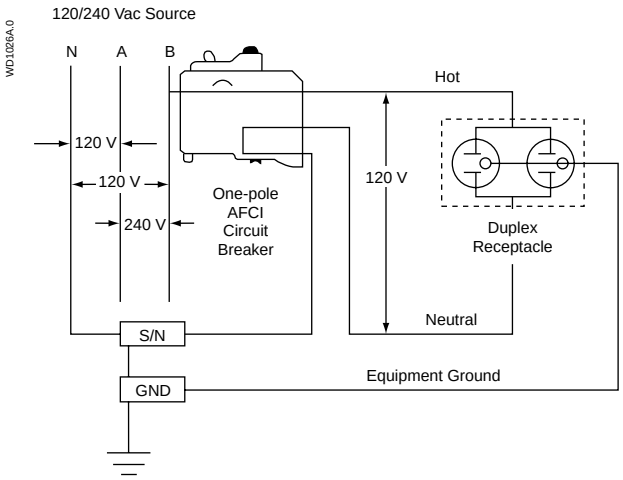


**AFCI Arc-D-tect Circuit Breaker Installation**

## ACCESSORIES

Most QO and QOB circuit breakers can be supplied with electrical accessories factory-installed on one-, two- or three-pole circuit breakers. Field-installed handle accessories are available as shown in the table on page 17. See the Special Application Circuit Breakers section for information on accessory availability. Electrical accessories are not available on AFCI circuit breakers.

Only one electrical accessory can be installed per circuit breaker. Electrical accessories are factory-installed only. No field modification is possible. All electrical accessories occupy one additional pole space. The proper suffix number must be added to the circuit breaker catalog number to order an accessory. See the table below for available suffix numbers.

Field-installed accessories are also available for QO and QOB circuit breakers. All field-installed accessories must be ordered separately. See the table on page 17 for field-installed accessory part numbers.

### Factory-installed Electrical Accessories

| Accessory | Description | | Volts | Coil Burden VA | Catalog Suffix |
|---|---|---|---|---|---|
| Shunt Trip | Used for tripping the circuit breaker electrically using a remote control source, dc and/or 50/60 Hz Vac as indicated.<br><br>Includes coil clearing switch. | | 12 ac/dc<br>24 ac/dc | 60<br>168 | 1042 |
| | | | 120 Vac<br>208 Vac<br>240 Vac | 72<br>228<br>288 | 1021 |
| | | | 277 Vac | 416 | 1082 |
| Auxiliary Switch “A” Contact | Ciircuit breaker open. | One contact only, opens when circuit breaker is off or tripped. 5 A max. at 120 Vac, 50/60 Hz. | | | 1200 |
| Auxiliary Switch “B” Contact | Ciircuit breaker open. | One contact only, closed when circuit breaker is off or tripped. 5 A max. at 120 Vac, 50/60 Hz. | | | 1201 |
| Alarm Switch | Circuit breaker tripped.<br><br>Circuit breaker open or closed. | One contact only, closed when circuit breaker is tripped. 5 A max. at 120 Vac, 50/50 Hz.<br><br>One contact only, open when circuit breaker is on or off. 5 A max. at 120 Vac, 50/50 Hz. | | | 2100 |


© 1998 Square D All Rights Reserved

### Shunt Trip

The shunt trip accessory is used to trip the circuit breaker from a remote location by using a trip coil energized from a separate circuit. When energized by a push button or other pilot device, the shunt trip causes the circuit breaker to trip. The handle moves to the tripped position and the VISI-TRIP indicator appears. The trip coil has a coil clearing contact to break the coil circuit when the circuit breaker trips.

Shunt trips are available for QO and QOB circuit breakers only (not for miniature switches, QO-GFCI products or QO-EPD products) with standard control voltage ratings up to 277 Vac or 24 Vdc. A 120 Vac shunt trip operates at 55% or more of rated voltage and all other shunt trips operate at 75% or more of rated voltage. See the following wiring diagram.

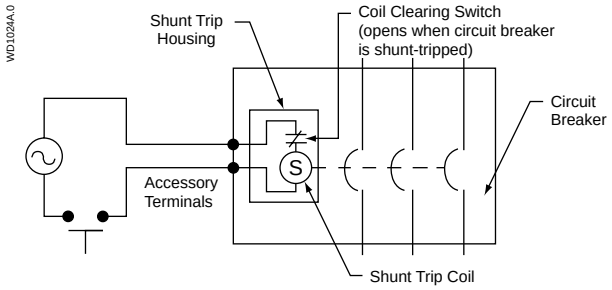


**Shunt Trip Wiring Diagram**

### Auxiliary Switch

The auxiliary switch accessory monitors the circuit breaker contact status and provides a remote signal indicating whether the circuit breaker contacts are open or closed. When the circuit breaker is off or tripped, the auxiliary switch with an "A" contact is open and the auxiliary switch with a "B" contact is closed. When the circuit breaker is on, the auxiliary switch with an "A" contact is closed and the auxiliary switch with a "B" contact is open.

Auxiliary switches are available for QO and QOB circuit breakers and miniature switches. See the following wiring diagrams.

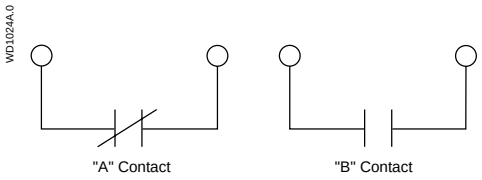


**Circuit Breaker ON**

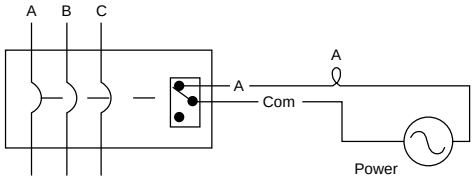


**Circuit Breaker ON—Light A "On"**

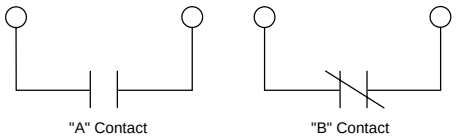


**Circuit Breaker OFF or Tripped**

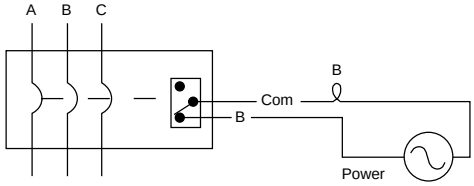


**Circuit Breaker OFF or Tripped—Light B "On"**


© 1998 Square D All Rights Reserved

### Alarm Switch

The alarm switch accessory monitors the circuit breaker trip status and is used to provide a remote warning signal indicating that the circuit breaker has tripped. This signal can be used in conjunction with a horn, pilot light or some other indicator.

The contact on the standard alarm switch is open when the circuit breaker is in the off or on position and is closed when the circuit breaker is in the tripped position.

Alarm switches are actuated when the circuit breaker has tripped as a result of an overload, short circuit or shunt trip operation.

Alarm switches are available for QO and QOB circuit breakers and miniature switches. See the wiring diagram below.

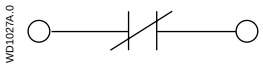


**Normally-open Alarm Switch Circuit Breaker Tripped**

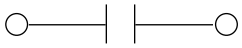

**Circuit Breaker OFF or ON**

### Field-installed Accessories

| Accessory | Description | Catalog Number |
|---|---|---|
| Handle Tie | Ties 2 one-pole circuit breakers together.<br>Ties 2 one-pole side-by-side QOT circuit breakers together.<br>Ties 3 one-pole circuit breakers together, includes lock-off for California Title 24. | QO1HT<br>QOTHT<br>QO3HT |
| Handle Lock-off (Clamp) | Attaches to one-pole circuit breaker handles.<br>Attaches to one-, two- or three-pole circuit breaker handles. | QO1LO<br>HLO1 |
| Handle Padlock Attachment | One-pole circuit breakers (all). Attaches to circuit breaker escutcheon–fixed.<br>One-pole QOT circuit breakers. Attaches to circuit breaker escutcheon–fixed.<br>Two-pole and three-pole circuit breakers (except GFI, EPD, AFI). Attaches to circuit breaker escutcheon–fixed.<br>One-pole circuit breakers (except GFI, EPD, AFI). Attaches to circuit breaker handle–removable.<br>Two-pole and three-pole circuit breakers (except GFI, EPD, AFI). Attaches to circuit breaker handle–removable.<br>Two-pole QO-GFI, QO-EPD, QO-AFI only. | QO1PA<br>QOTHPA<br>QO1PL<br>QOHPL<br>QO1HPL<br>GFI2PA |
| Mechanical Interlock | Interlocks 2 two-pole or 1 two-pole and 1 one-pole QO circuit breakers. | QO2DTI |
| Mechanical Interlock with Retaining Kit | For interlocking two adjacent back-fed circuit breakers in dual power supply applications. Interlocks 2 two-pole or 1 two-pole and 1 one-pole QO circuit breakers. | QO2DTIM |
| Rainproof Cover | Vertical cover for two-pole circuit breakers.<br>Horizontal cover for two-pole circuit breakers. | BCV<br>BCH |

### Handle Tie

The handle tie accessory converts any adjacent one-pole QO circuit breakers to one independent trip multi-pole circuit breaker.

### Handle Lock-off (Clamp)

The handle lock-off accessories fasten the handle in the on or off position. These handle lock-offs cannot be padlocked.

### Handle Padlock Attachment

The handle padlock attachment allows padlocking the circuit breaker handles in on or off position.

Handle padlock attachments are available in two styles: removable and fixed. The removable style is intended to be a temporary device. Once work on the circuit has been completed, the attachment can


© 1998 Square D All Rights Reserved

be removed for the circuit breaker to resume normal operation. The fixed style is intended to be a permanent device. Once the work on the circuit has been completed, the padlock can be removed for the circuit breaker to resume normal operation, but the attachment stays in place.

**Mechanical Interlock Attachment**

The mechanical interlock attachment locks the handles of two adjacent circuit breakers to prevent both circuit breakers from being on at the same time. Both circuit breakers may be switched to the off position with the mechanical interlock in place.

**Mechanical Interlock Attachment with Retaining Kit**

The mechanical interlock attachment locks the handles of two adjacent back-fed circuit breakers in dual power supply applications.




QO1HT
Handle Tie

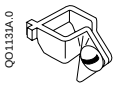


HLO-1 Handle
Lock-off (Clamp)




QO1LO Handle
Lock-off (Clamp)

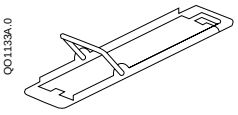


QO1PA Handle
Padlock Attachment

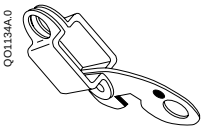


QO1HPL Handle
Padlock Attachment

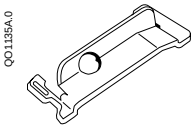


QP1PL Handle Padlock
Attachment

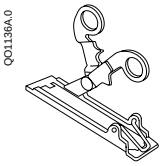


QOTHPA Handle
Padlock Attachment

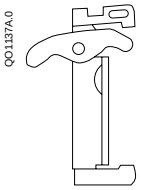


QO2DTI Mechanical Interlock
Attachment

## TRIP CURVES

The tripping characteristics of molded case circuit breakers can be represented by a characteristic tripping curve that plots tripping time versus current level. The curve shows the amount of time required for a circuit breaker to trip at a given overcurrent level. Manufacturing tolerances result in a curve that is a band bound by minimum and maximum values of total clearing time. Total clearing time is the sum of the sensing time, unlatching time, mechanical operating time and arcing time of the circuit breaker. For currents in excess of 135% of the circuit breaker rating at rated ambient temperature (40°C), the circuit breaker will automatically open the circuit within limits specified by the band.

**Thermal Tripping Characteristics**

The upper left portion of each trip curve displays the thermal response of the circuit breaker. On low-fault current levels, up to the magnetic tripping level, thermal tripping occurs when a bimetal in the circuit breaker responds to heat associated with the overcurrent. The bimetal deflects, unlatching the mechanism and mechanically causing the circuit breaker to trip and open the circuit. The larger the overload, the faster the circuit breaker will operate to clear the circuit.

**Magnetic Tripping Characteristics**

The lower right portion of each trip curve displays the magnetic tripping response of the circuit breaker. This takes place when overcurrents of sufficient magnitude operate an internal magnetic armature which unlatches the mechanism. Magnetic tripping occurs with no intentional time delay.


© 1998 Square D All Rights Reserved

# Trip Curves

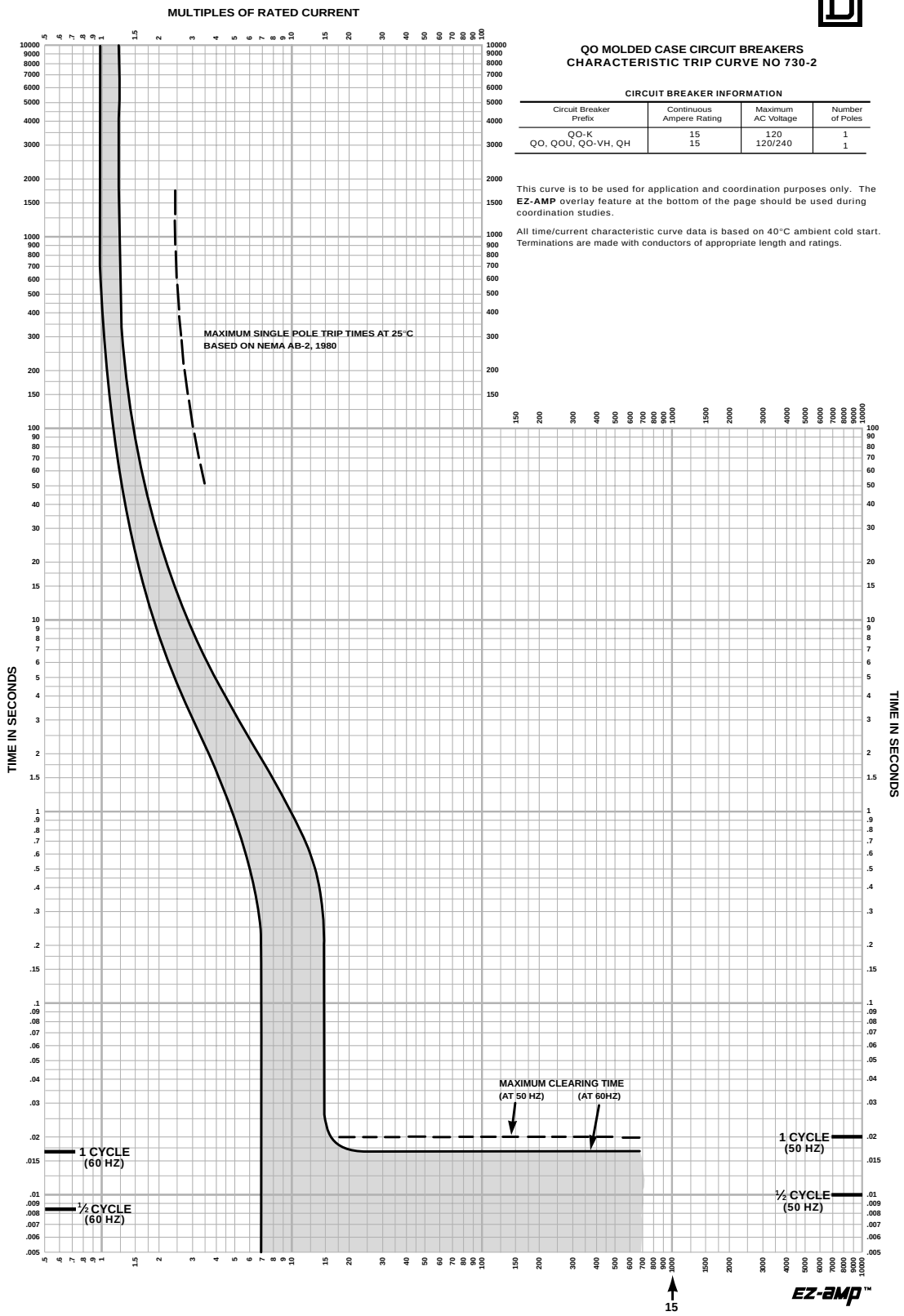


**QO MOLDED CASE CIRCUIT BREAKERS**
**CHARACTERISTIC TRIP CURVE NO 730-2**

**CIRCUIT BREAKER INFORMATION**

| Circuit Breaker Prefix | Continuous Ampere Rating | Maximum AC Voltage | Number of Poles |
|---|---|---|---|
| QO-K | 15 | 120 | 1 |
| QO, QOU, QO-VH, QH | 15 | 120/240 | 1 |

This curve is to be used for application and coordination purposes only. The **EZ-AMP** overlay feature at the bottom of the page should be used during coordination studies.

All time/current characteristic curve data is based on 40°C ambient cold start. Terminations are made with conductors of appropriate length and ratings.


© 1998 Square D All Rights Reserved

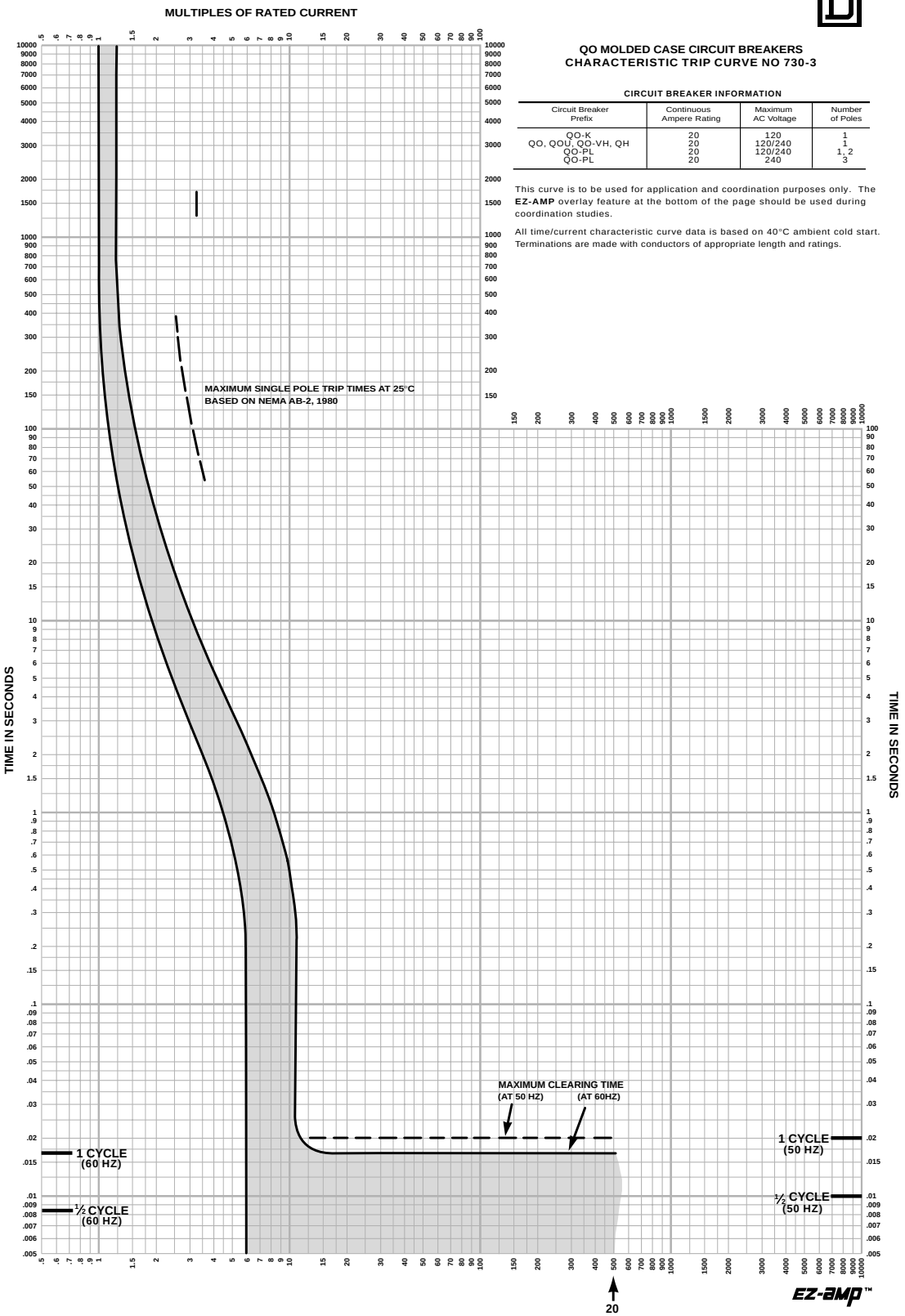


**QO MOLDED CASE CIRCUIT BREAKERS**
**CHARACTERISTIC TRIP CURVE NO 730-3**

**CIRCUIT BREAKER INFORMATION**

| Circuit Breaker Prefix | Continuous Ampere Rating | Maximum AC Voltage | Number of Poles |
|---|---|---|---|
| QO-K | 20 | 120 | 1 |
| QO, QOU, QO-VH, QH | 20 | 120/240 | 1 |
| QO-PL | 20 | 120/240 | 1, 2 |
| QO-PL | 20 | 240 | 3 |

This curve is to be used for application and coordination purposes only. The **EZ-AMP** overlay feature at the bottom of the page should be used during coordination studies.

All time/current characteristic curve data is based on 40°C ambient cold start. Terminations are made with conductors of appropriate length and ratings.

SQUARE D®

© 1995 Square D

**MULTIPLES OF RATED CURRENT**
Drawing No. B48095-730-03

June, 1995

Order No.0730TC8703R5/95
(Replaces 0730TC8703)



© 1998 Square D All Rights Reserved

# Trip Curves

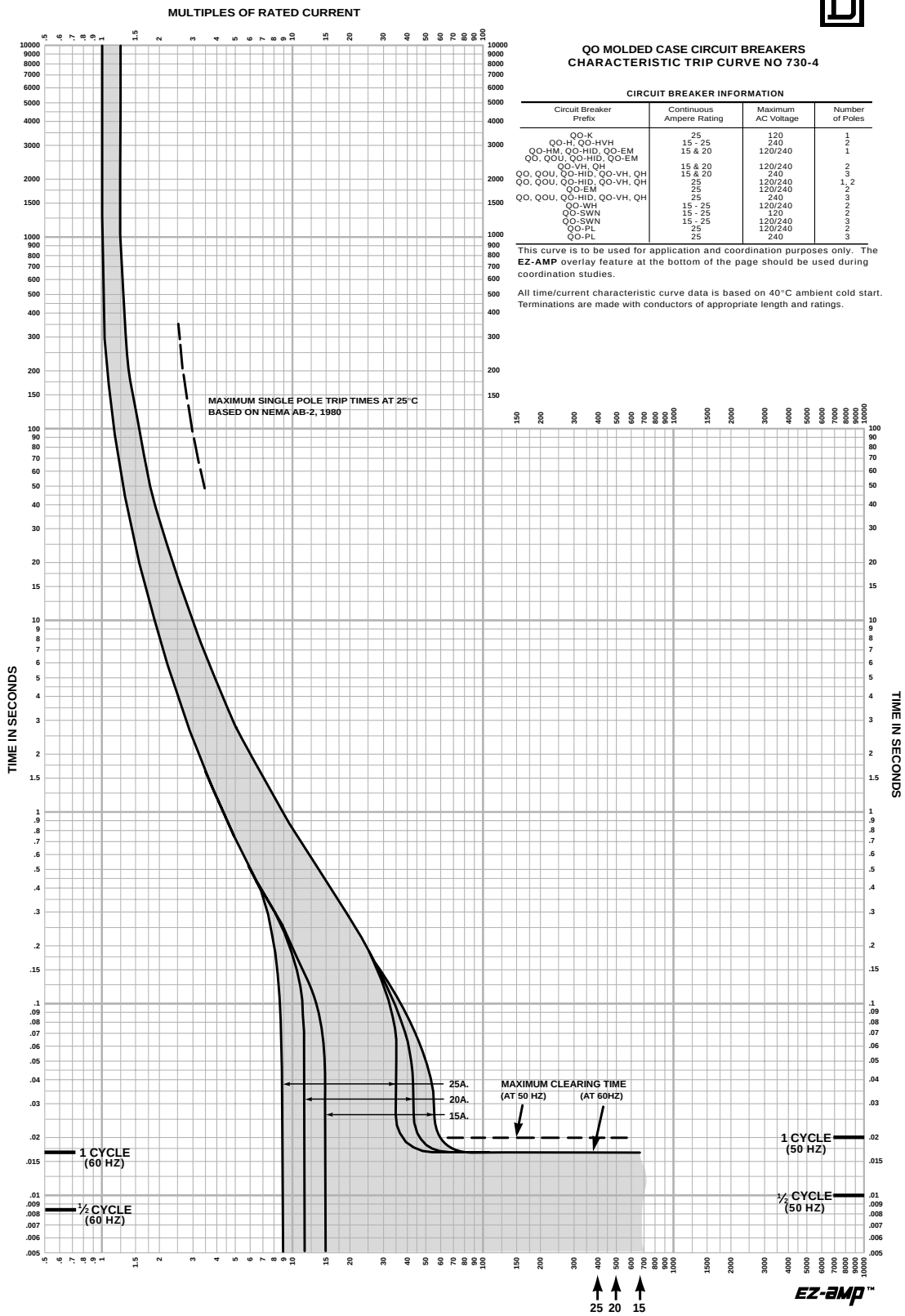


**QO MOLDED CASE CIRCUIT BREAKERS**
**CHARACTERISTIC TRIP CURVE NO 730-4**

**CIRCUIT BREAKER INFORMATION**

| Circuit Breaker Prefix | Continuous Ampere Rating | Maximum AC Voltage | Number of Poles |
|---|---|---|---|
| QO-K | 25 | 120 | 1 |
| QO-H, QO-HVH | 15 - 25 | 240 | 2 |
| QO-HM, QO-HID, QO-EM | 15 & 20 | 120/240 | 1 |
| QO, QOU, QO-HID, QO-EM | | | |
| QO-VH, QH | 15 & 20 | 120/240 | 2 |
| QO, QOU, QO-HID, QO-VH, QH | 15 & 20 | 240 | 3 |
| QO, QOU, QO-HID, QO-VH, QH | 25 | 120/240 | 1, 2 |
| QO-EM | 25 | 120/240 | 2 |
| QO, QOU, QO-HID, QO-VH, QH | 25 | 240 | 3 |
| QO-WH | 15 - 25 | 120/240 | 2 |
| QO-SWN | 15 - 25 | 120 | 2 |
| QO-SWN | 15 - 25 | 120/240 | 3 |
| QO-PL | 25 | 120/240 | 2 |
| QO-PL | 25 | 240 | 3 |

This curve is to be used for application and coordination purposes only. The **EZ-AMP** overlay feature at the bottom of the page should be used during coordination studies.

All time/current characteristic curve data is based on 40°C ambient cold start. Terminations are made with conductors of appropriate length and ratings.

SQUARE D®
© 1995 Square D

**MULTIPLES OF RATED CURRENT**
Drawing No. B48095-730-03

June, 1995

Order No.0730TC8704R5/95
(Replaces 0730TC8704)


© 1998 Square D All Rights Reserved

# Trip Curves

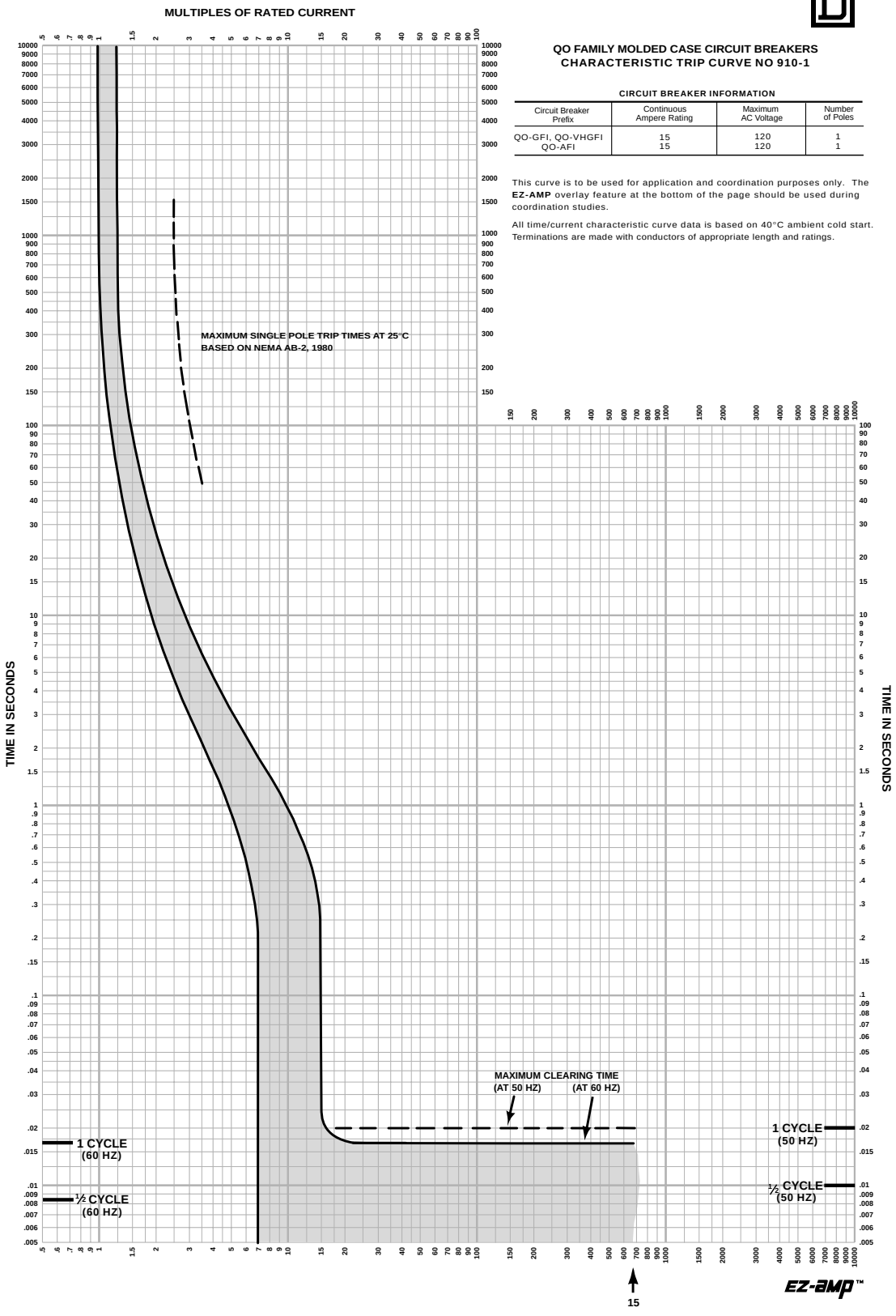


**QO FAMILY MOLDED CASE CIRCUIT BREAKERS**
**CHARACTERISTIC TRIP CURVE NO 910-1**

**CIRCUIT BREAKER INFORMATION**

| Circuit Breaker Prefix | Continuous Ampere Rating | Maximum AC Voltage | Number of Poles |
|---|---|---|---|
| QO-GFI, QO-VHGFI | 15 | 120 | 1 |
| QO-AFI | 15 | 120 | 1 |

This curve is to be used for application and coordination purposes only. The **EZ-AMP** overlay feature at the bottom of the page should be used during coordination studies.

All time/current characteristic curve data is based on 40°C ambient cold start. Terminations are made with conductors of appropriate length and ratings.

SQUARE D®

© 1985 Square D Company

Curve No. 0910TC8501
Drawing No. B48095-910-01



© 1998 Square D All Rights Reserved

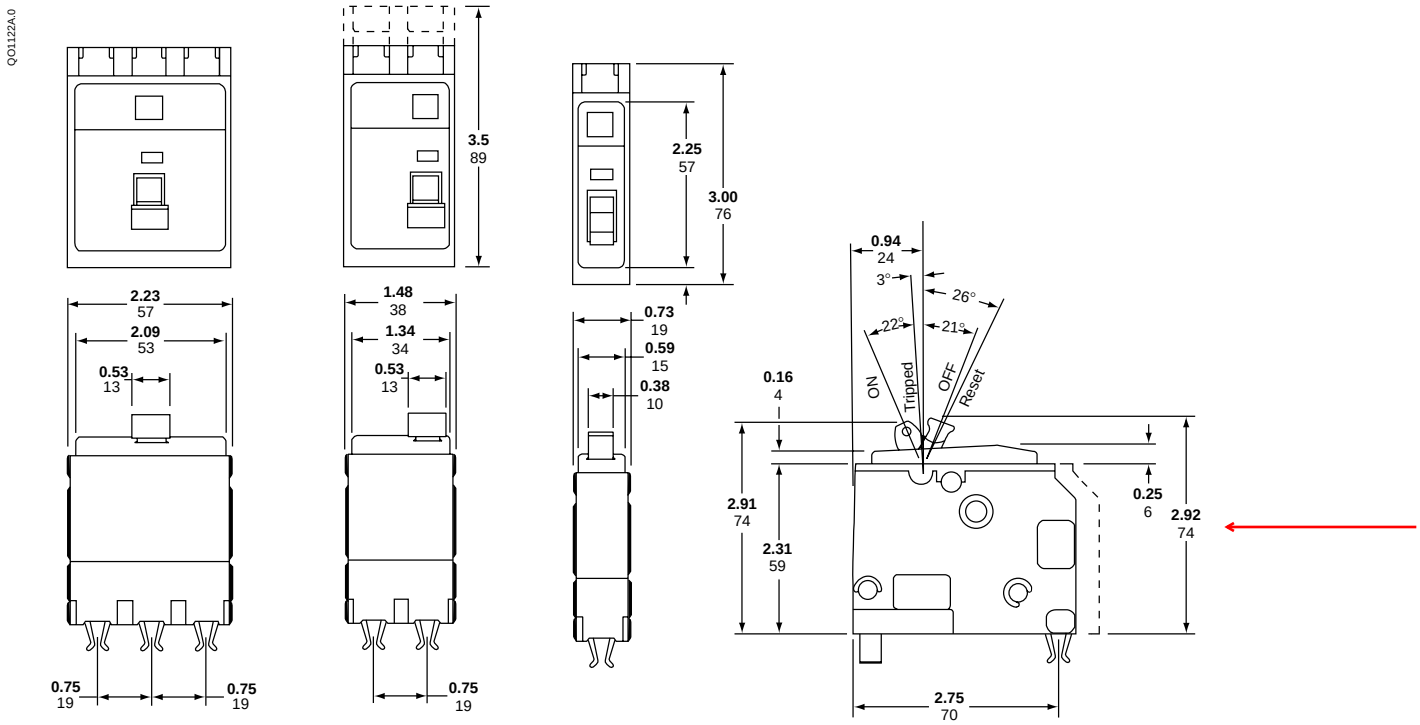


**Type QO Plug-on Circuit Breaker**

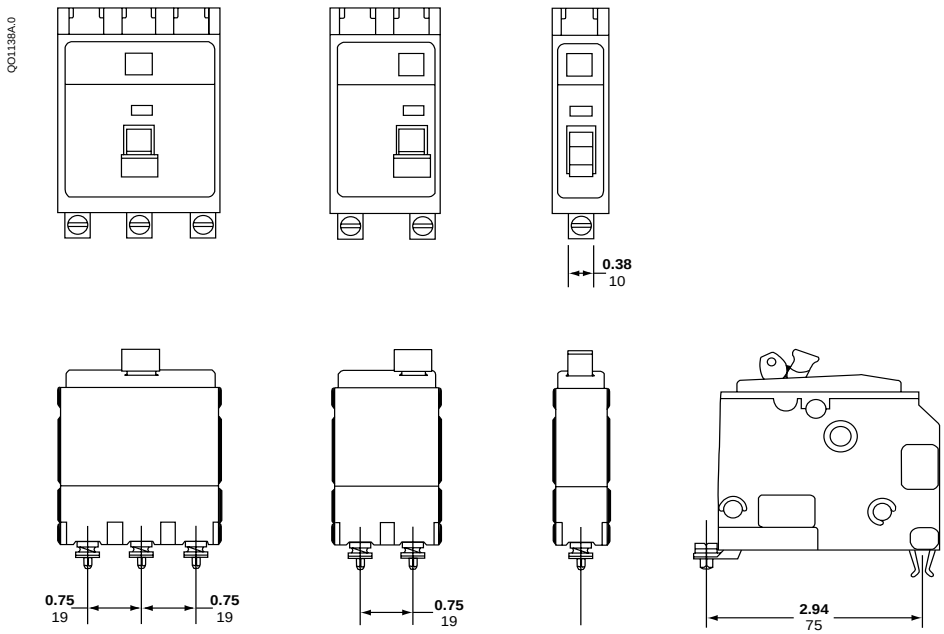


**Type QOB Bolt-on Circuit Breaker**

Dual Dimensions: **in.** mm


© 1998 Square D All Rights Reserved

## Dimensions

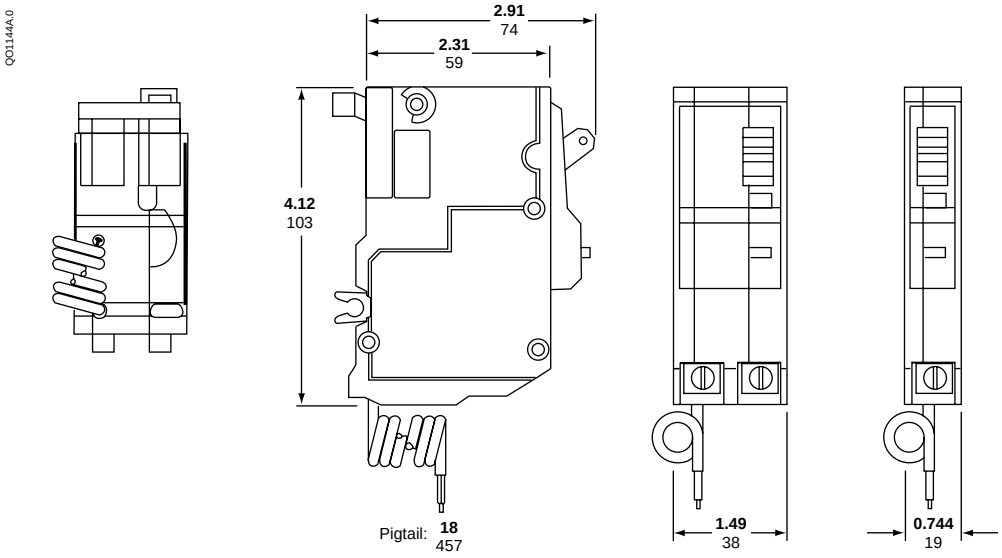


**Type QO-GFI Circuit Breaker**

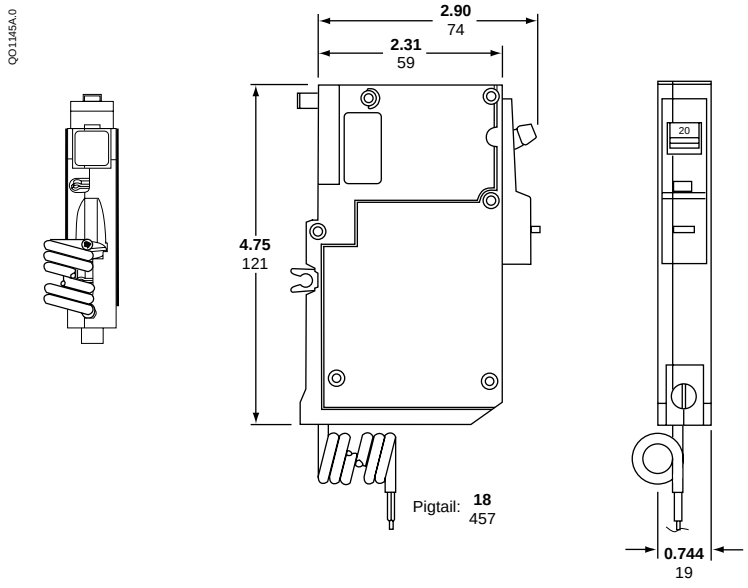


**Type QO-AFI Circuit Breaker**

Dual Dimensions: **in.** mm


© 1998 Square D All Rights Reserved

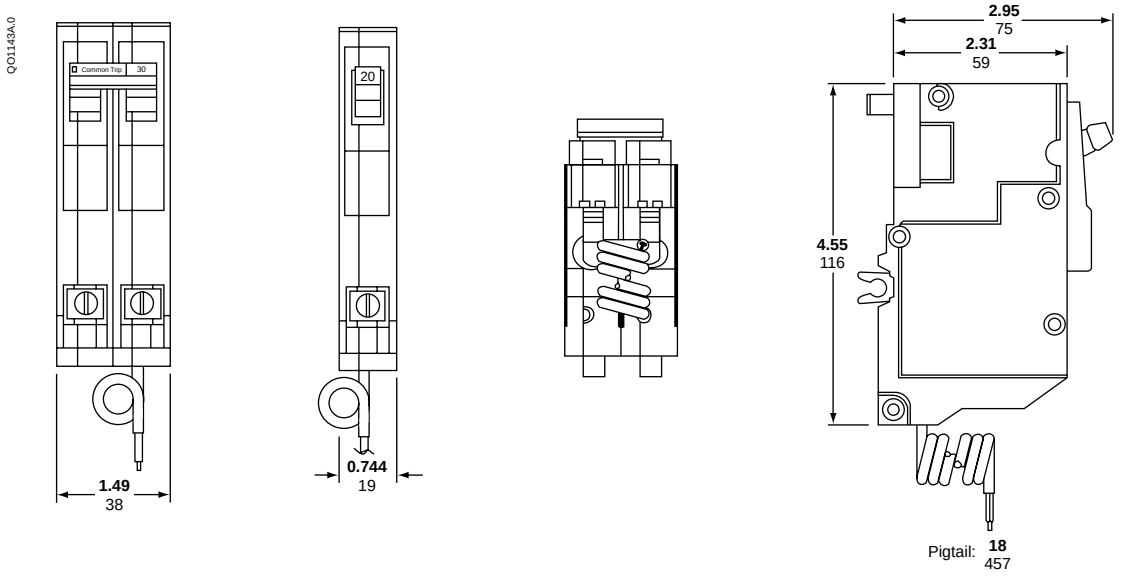


**Type QO-PL Remote Control Circuit Breaker**

Dual Dimensions: **in.** mm


© 1998 Square D All Rights Reserved

## GLOSSARY OF TERMS AND ACRONYMS

**accessory (device)** = an electrical or mechanical device that performs a secondary or minor function apart from overcurrent protection.

**AFCI (arc-fault current interrupter)** = a circuit interrupter that detects a wide range of arc-fault conditions.

**AIR (ampere interrupting rating)** = the highest current at rated voltage that an overcurrent protective device is intended to interrupt under specified test conditions (NEC).

**alarm switch (bell alarm)** = see overcurrent trip switch.

**ambient temperature rating** = temperature at which the continuous current rating (handle rating) of a circuit breaker is based; the temperature of the air immediately surrounding the circuit breaker which can affect the thermal (overload) tripping characteristics of thermal-magnetic circuit breakers.

**ampere rating** = see continuous current rating.

**auxiliary switch** = a switch mechanically operated by the main device for signaling, interlocking, or other purposes.

**bell alarm** = see overcurrent trip switch.

**branch circuit** = the circuit conductor between the final overcurrent device protecting the circuit and the outlet(s).

**circuit breaker** = a device designed to open and close a circuit by non-automatic means and to open the circuit automatically on an overcurrent without damage to itself when properly applied within its rating.

**coil clearing switch** = a mechanically-operated switch in series with the coil of a shunt trip device which breaks the coil current when the circuit breaker opens.

**continuous current rating (handle rating)** = the designated rms alternating current in amperes which a device or assembly will carry continuously in free air without tripping or exceeding temperature limits.

**continuous load** = a load where the maximum current on the circuit is expected to continue for more than 3 hours.

**CSA** = Canadian Standards Association.

**current path (of a circuit breaker**) = the current-carrying conductors within a circuit breaker between, and including, line and load terminations.

**current rating** = see continuous current rating.

**frequency** = the number of cycles per second for an alternating current system.

**frequency rating** = the range of frequencies within which a product can be applied.

**ground fault** = an unintentional current path, through ground, back to the source.

**handle rating** = continuous current rating.

**instantaneous pickup** = the current level at which the circuit breaker will trip with no intentional time delay.

**integral ground-fault protection** = equipment ground-fault protection on grounded neutral systems provided by components internal to the circuit breaker.

**interrupting rating** = the highest current at rated voltage available at the incoming terminals of the circuit breaker. When the circuit breaker can be used at more than one voltage, the interrupting rating will be shown on the circuit breaker for each voltage level. The interrupting rating of a circuit breaker must be equal to or greater than the available short-circuit current at the point at which the circuit breaker is applied to the system.

**inverse time** = a qualifying term indicating there is purposely introduced a delay in the tripping action of the circuit breaker, which delay decreases as the magnitude of the current increases.


© 1998 Square D All Rights Reserved

**molded case circuit breaker** = a circuit breaker which is assembled as an integral unit in a supportive and enclosed housing of insulating material.

**molded case switch** = a device designed to open and close a circuit by non-automatic means that is not intended to provide overcurrent protection.

**NEMA** = National Electrical Manufacturer's Association.

**NOM/ANCE** = Mexican certification authority.

**OTS** = overcurrent trip switch (alarm switch, bell alarm).

**overcurrent** = any current in excess of the rated continuous current of equipment or the ampacity of a conductor.

**overcurrent trip element** = a device which detects an overcurrent and transmits the energy necessary to open the circuit automatically.

**overcurrent trip switch** = a mechanically-operated switch which indicates when a circuit breaker has tripped due to overcurrent conditions.

**rms** = root-mean-square.

**shunt trip** = an accessory which trips the circuit breaker from a remote location using an external voltage source.

**thermal-magnetic circuit breaker** = a general purpose term for circuit breakers that use bimetals and electromagnetic assemblies to provide both thermal and magnetic overcurrent protection.

**UL** = Underwriters Laboratories Inc.


© 1998 Square D All Rights Reserved

# Cut Sheet 6

# Service Entrance Suppressor(B), 160 kA

CONNECT AND PROTECT




The nVent ERICO SES160B Series of Surge Protective Devices (SPD) provide economical protection against damaging transients and surge currents. cUL® 1449 Listed SPD for Type 1 or Type 2 locations. Allows for installation on the line or load of the service panels, circuit breakers not required. With a 160 kA per phase surge rating, the SES160B is well suited for category C locations. Applications include service entrance, distribution, branch panels, MMC, lighting panels, HVAC, and more. With a NEMA® 4X enclosure rating this product series is also well suited for outdoor applications.

## FEATURES

- 160 kA 8/20 µs maximum surge rating per phase
- Excellent clamping, low UL voltage protection ratings
- Relay alarming for power/phase loss and surge protection device health
- Compact design can be directly mounted to panel or installed in a small space
- Optional Flush Mounting Plate

| Part Number | SES160B120/240SP | SES160B120V | SES160B208Y | SES160B240D | SES160B240V | SES160B480D | SES160B480Y |
|---|---|---|---|---|---|---|---|
| Nominal System Voltage (Un) | 120/240 V | 120 V | 120/208 V | 240 V | 240 V | 480 V | 277/480 V |
| Distribution System | 1Ph 3W+G | 1Ph 2W+G | 3Ph Y 4W+G | 3PhΔ 3W+G | 1Ph 2W+G | 3PhΔ 3W+G | 3Ph Y 4W+G |
| Max Continuous Operating Voltage (Uc) | 180/360 V | 180 V | 150/300 V | 275 V | 350 V | 550 V | 350/700 V |
| Frequency | 0 – 600 Hz | | | | | | |
| Short Circuit Current Rating (SCCR) | 200 kA | | | | | | |
| Nominal Discharge Current (In), Per Mode | 20 kA 8/20 µs | | | | | | |
| Max Discharge Current (Imax), Per Phase | 160 kA 8/20 µs | | | | | | |
| Voltage Protection Rating (VPR), L-L | 1,200 V | – | 1,000 V | 1,500 V | – | 3,000 V | 2,000 V |
| Voltage Protection Rating (VPR), L-N | 700 V | 700 V | 600 V | – | 1,200 V | – | 1,200 V |
| Voltage Protection Rating (VPR), L-PE | 700 V | 700 V | 700 V | 900 V | 1,000 V | 1,500 V | 1,000 V |

| Part Number | SES160B120/240SP | SES160B120V | SES160B208Y | SES160B240D | SES160B240V | SES160B480D | SES160B480Y |
|---|---|---|---|---|---|---|---|
| Voltage Protection Rating (VPR), N-PE | 600 V | 600 V | 500 V | – | 1,000 V | – | 1,000 V |
| Protection Modes | All modes protected | | | | | | |
| Status Indication | 1 green LED per line; Audible alarm | | | | | | |
| Remote Contact Switching Capacity | 2.0 A @ 240 V | | | | | | |
| Remote Contacts | Yes | | | | | | |
| Lead Length | 18" | | | | | | |
| Lead Size | #12 | | | | | | |
| Temperature | –40 to 185°F | | | | | | |
| Enclosure Material | Polycarbonate | | | | | | |
| Enclosure Rating | NEMA®-4X; UL® 50E Type 4 | | | | | | |
| Mounting | 3/4" straight nipple | | | | | | |
| Unit Weight | 1.16 lb | | | | | | |
| Certification Details | CSA C22.2 No. 269.1; UL® 1449 Edition 5 Type 1/2, 20 kA Mode | | | | | | |
| Complies With | ANSI®/IEEE® C62.41.2-2002 Cat A, Cat B, Cat C ANSI®/IEEE® C62.41.1-2002 Cat A, Cat B, Cat C ANSI®/IEEE® C62.45-2002 Cat A, Cat B, Cat C | | | | | | |
| Depth | 2.93" | | | | | | |
| Height | 4.2" | | | | | | |
| Width | 3 1/4" | | | | | | |

Maximum Clamp Voltage: Equivalent to Max Continuous Operating Voltage Line to Line = 360V
Peak Current: Equivalent to Nominal Discharge Current Per Mode = 20kA
Response Time: <5 nanoseconds
Occurrences: 20 times at Nominal Discharge Current
Minimum Series Inductance: 200 microhenries
Temperature Range: -40 – 185 F



©2021 nVent. All nVent marks and logos are owned or licensed by nVent Services GmbH or its affiliates. All other trademarks are the property of their respective owners.
nVent reserves the right to change specifications without notice.

# Cut Sheet 7

# **24V POWER SUPPLY** DATA SHEET



## KEY FEATURES

- Universal input voltage range (85–305 VAC)
- Active Power Factor Correction (PFC)
- Low earth leakage current
- Input inrush current limiting (<30 Amp)
- Single 24 VDC output voltage with dual outputs
- 500 W total rated output power
- High efficiency (94% from 50% to 100%)
- Over temperature, OV, OC and SC protections
- Wide temperature operating range (-40 – 70° C)
- Sealed enclosure, IP65 and IP67 Ingress Protection grade
- Safety certification to UL/IEC/EN 62368-1
- Specifically designed with Daktronics for LED message signs and manufactured by approved supplier (Daktronics part number A-4985215)

| DIMENSIONS | WEIGHT |
|---|---|
| 11.724" H x 4" W x 2" D<br>(297.8 mm x 101.5 mm x 50.8 mm) | 3.9 lb<br>(1.77 kg) |

## INPUT SPECIFICATIONS

| SPECIFICATION | TEST CONDITIONS/NOTES | MIN. | NOMINAL | MAX. | UNITS |
|---|---|---|---|---|---|
| **AC Input Voltage** | PS starts and operates at 85 VAC at all load conditions | 85 | 100–277 | 305 | $V_{RMS}$ |
| **Input Frequency** | | 47 | 50/60 | 63 | Hz |
| **Input Current** | 115 VAC: 5 A<br>230 VAC: 2.5 A<br>277 VAC: 2.1 A | - | - | 5.0 | A |
| **Inrush Current** | Cold start, 25° C ambient, full load<br>115 VAC<br>230 VAC | -<br>- | -<br>- | 20<br>30 | A |
| **Fusing** | 10 A, 500 VAC, Time-delay fuse on both Line and Neutral | - | - | 10 | A |
| **Efficiency** | At 115 VAC, 100% rated load<br>At 230/277 VAC, 100% rated load | 85<br>90 | -<br>- | 92<br>94 | % |
| **Power Factor** | From 50–100% of rated load, 277, 230, 115 VAC, 50/60 Hz input voltages | 0.90 | - | - | - |
| **iTHD** | From 50–100% rated load, 115, 230, 277 VAC 50/60 Hz | - | - | 20 | % |
| **Harmonic Current** | Complies with EN 61000-3-2 at 230 VAC, 50/60 Hz, Class A<br>Complies with EN 61000-3-2 Class C, D at 230 VAC, 50/60 Hz, >150 W load | | | | |
| **Fluctuations and Flicker** | Complies with EN 61000-3-3 at nominal voltages and full load | | | | |
| **Earth Leakage Current** | Normal conditions, 277 VAC, 60 Hz (worst case) | - | - | 490 | µA |

## OUTPUT SPECIFICATIONS

| SPECIFICATION | TEST CONDITIONS/NOTES | MIN. | NOMINAL | MAX. | UNITS |
|---|---|---|---|---|---|
| **Output Voltage** | ±5% set point accuracy at 20% load | - | 24 | - | V |
| **Total Power Rating** | Convection cooling (Maximum of 300 W per whip) | - | - | 500 | W |
| **Rated Current per whip** | | 0 | - | 12.5 | A |
| **Line Regulation** | VAC: 85–305 $V_{RMS}$ | - | - | ±0.1 | %Vo |
| **Ripple and Noise** | Rated load, Peak-to-peak, 20 MHz BW | - | - | 1 | %Vo |

## PROTECTION FEATURES

| SPECIFICATION | TEST CONDITIONS/NOTES | MIN. | NOMINAL | MAX. | UNITS |
|---|---|---|---|---|---|
| (All Protections will cause both outputs to shut down) | | | | | |
| **Over Current** | Hiccup mode, auto-recovering | 108 | - | 132 | %I Rated |
| **Short Circuit** | Hiccup mode, auto-recovering in 4 s typical | - | - | - | |
| **Over Voltage** | Power shut down, latch off | 120 | - | 145 | % |
| **Over Temperature (primary stage)** | Shut down, latch off. | - | 135 | - | °C |
| **Over Temperature (secondary stage)** | Hiccup mode, auto-recovering. | - | 70 | - | °C |
| **Isolation: Primary-to-Secondary** | Reinforced | - | 5000 | - | VDC |
| **Isolation: Input-to-Earth** | Basic | - | 2500 | - | VDC |

## ENVIRONMENTAL SPECIFICATIONS

| SPECIFICATION | TEST CONDITIONS/NOTES | MIN. | NOMINAL | MAX. | UNITS |
|---|---|---|---|---|---|
| **Operating Temperature Range** | Power supply does start up at -40° C<br>No de-rating up to 50° C, at ≥ 120 VAC | -40 | - | 70 | °C |
| **Storage Temperature** | | -40 | - | 85 | °C |
| **Humidity** | RH, condensing, operating<br>RH, non-operating | 0<br>0 | -<br>- | 100<br>100 | %<br>% |
| **Operating Altitude** | | - | - | 5000 | m |
| **Shock** | **EN 60068-2-27**<br>Operating: Half sine, 30 g, 18 ms, 3 axes, 6 shocks total (3 positive and 3 negative) | | | | |
| **Vibration** | **EN 60068-2-64**<br>Operating: Sine,10–500 Hz, 1 g, 3 axes, 1 oct/min., 60 min. | | | | |
| **MTBF** | Full Load, 40° C ambient<br>100% Duty cycle, Telcordia SR-332 | - | 500K | - | Hours |
| **Useful Life** | 120 VAC, 50% load (240 W),<br>60° C ambient temperature | - | 10 | - | Years |

## ELECTROMAGNETIC COMPATIBILITY (EMC) – EMISSIONS

| TYPE | CONDITIONS/NOTES | STANDARD | EQUIPMENT/ PERFORMANCE CLASS |
|---|---|---|---|
| **Conducted** | 115, 230, 277 $V_{RMS}$ At maximum load | EN 55032 (ITE)<br>FCC Part 15 | B |
| **Radiated** | | EN 55032 (ITE)<br>FCC Part 15 | B |
| **Line Voltage Fluctuation and Flicker** | At 20%, 50% and 100% maximum load<br>Nominal input voltages | EN 61000-3-3 | |
| **Harmonic Current Emission** | 230 VAC input voltage, 50/60 Hz<br>230 VAC 50/60 Hz, >150 W load | EN 61000-3-2<br>EN 61000-3-2 | A,<br>C, D |



201 Daktronics Drive, PO Box 5128, Brookings, SD 57006
Phone: 1-800-325-8766 or 605-692-0200 Fax: 605-697-4746


DAKTRONICS

## ELECTROMAGNETIC COMPATIBILITY (EMC) – IMMUNITY

| TYPE | CONDITIONS/NOTES | STANDARD |
|---|---|---|
| **ESD** | 15 kV air discharge, 8 kV contact, at any point of the system | EN 61000-4-2 |
| **Radiated Field** | 10 V/m, 80–1000 MHz, 1 KHz, 80% AM | EN 61000-4-3 |
| **Electric Fast Transient** | ±2 kV on AC power port | EN 61000-4-4 |
| **Surge** | ±1 kV line to line; ± 2 kV line to earth on AC power port | EN 61000-4-5 |
| **Conducted RF Immunity** | 10 $V_{RMS}$ | EN 61000-4-6 |
| **Dips and Interruptions** | **100–127 VAC:**<br>0% Vin for 10 ms<br>40% Vin for 200 ms<br>70% Vin for 500 ms<br>0% for 5 s | <br>EN61000-4-11<br>EN61000-4-11<br>EN61000-4-11<br>EN61000-4-11 |

## SAFETY AGENCIES APPROVALS

| TYPE | SAFETY STANDARDS AND FILE NUMBERS | CATEGORY |
|---|---|---|
| **UL/CSA** | UL/CSA 62368-1 3rd Edition | Audio/video, information, and communication technology equipment |
| **CB Certification** | IEC/EN 62368-1 | Audio/video, information, and communication technology equipment |
| **CE** | Directive 2014/35/EU: Electrical Safety: Low Voltage electrical equipment (LVD);<br>Directive 2014/30/EU: Electromagnetic Compatibility (EMC);<br>Directive EU 2015/863 (RoHS 3) | |



Consistent with Daktronics policy of continuing product improvement,
specifications shown on this document are subject to change without notice.
DD5064984 032823 Rev 00 Page 4 of 4 Copyright © 2023 Daktronics, Inc.

DAKTRONICS

# Cut Sheet 8

# VANGUARD® DMS AUXILIARY CONTROL PANEL FOR VFC

## OVERVIEW

The Vanguard DMS Auxiliary Control Panel compliments the VFC DMS controller by providing a secondary control interface panel at the DMS site. The small Panel can be located in the DMS, in a pole-mounted enclosure or in a ground-mounted traffic cabinet. When the VFC controller is located on the ground, a maintenance technician can use the Auxiliary Control Panel to perform diagnostics while working in the sign, or vice versa. That flexibility improves safety and reduces maintenance time by reducing trips between the ground and the sign.

The Auxiliary Control Panel provides identical functionality as the front panel of the VFC Controller. It connects to a VCB within the sign from distances of up to 1,640 feet to enable an operator to control, configure, or monitor the DMS and its subsystems.

The LCD and keypad on the Auxiliary Control Panel provide an interactive and easy-to-use menu system. The menu screens can be used to view the current status of the DMS systems, activate messages, blank the DMS, perform diagnostic tests and more. The high-contrast full-color LCD panel is backlit and can be easily used in both full sunlight and dark conditions.

Indicators are provided for power, heartbeat, communication status and local/remote mode. A laptop computer can be easily connected to the panel's NTCIP-compatible RS232 port for advanced diagnostics or control.

See DD2508962 for more details about the VFC controller.




## HIGHLIGHTS

### GENERAL

- Duplicates front panel interface of VFC Sign Controller
- NTCIP-compliant communication port
- Interactive front panel menu system
- Wide operating temperature range

### FLEXIBLE

- Provides a second on-site DMS control panel
- Can be installed inside DMS, on a pole-mounted enclosure, or in a ground-mounted traffic cabinet
- Compatible with Vanguard DMS

### MAINTENANCE FRIENDLY

- Graphical LCD full-color screen and keypad
- Backlit high-contrast LCD visible in all conditions
- Keypad and switches operable while wearing gloves
- Real-time sign monitor
- Monitor and diagnose all electronic subsystems
- Power, communication, heartbeat and local/remote mode indicators
- Switches for power and controller reset
- RS232 communication port for advanced diagnostics and control

DAKTRONICS

# VANGUARD® DMS AUXILIARY CONTROL PANEL

FOR VFC

## FEATURES

### GENERAL

- Duplicates front panel interface of VFC Sign Controller
- Supports all Daktronics Vanguard VF and VX-series DMS
- Controls amber and full-color displays

### FRONT CONTROL PANEL AND INDICATORS

- Full-matrix LCD (280x472) with graphic capabilities
- 16 button membrane keypad
- Easy to use interactive menu system on LCD/keypad
- Start and stop messages from front panel menu
- Power, heartbeat and communication LED indicators

### DIAGNOSTICS AND MAINTENANCE

- Monitor and diagnose all systems from front panel menu
- Real-time diagnostics for pixels, power systems, fans and other systems
- Monitors temperature, light, door and in-sign sensors
- Real-time what-you-see-is-what-you-get (WYSIWYG) message monitor

### LAPTOP CONTROL PORT

- NTCIP-compliant
- Supports NTCIP communication for advanced diagnostics or control with a laptop
- Integrated RS232 serial port (DB-9 connector)

## PHYSICAL CHARACTERISTICS

### DIMENSIONS AND WEIGHT

- Height: 6.7" (171 mm)
- Width: 9.4" (238 mm)
- Depth: 3.5" (90 mm)
- Weight: 3.5 lbs (1.6 kg)

### ENVIRONMENT AND POWER

- NEMA TS 4 - compliant and tested
- Operating Temperature Range: -34° F to +165° F (-37° C to +74° C)
- Power Source: 120 VAC @ 60 Hz
- Max. Power Consumption: 10 W



Central Controller located at Traffic Management Center



VFC accessible inside the DMS or from the ground



Auxiliary Control Panel accessible from the ground or inside the DMS



Portable Maintenance Computer provides optional NTCIP communication

117 Prince Drive PO Box 5120 Brookings, SD 57006
tel 800-833-3157 605-692-0200 x57060 fax 605-697-4700
www.daktronics.com/its email transportation@daktronics.com
Copyright © 2015 Daktronics DD3122447 Rev05 082015

DAKTRONICS

# Cut Sheet 9

# VANGUARD® VFC CONTROLLER

## OVERVIEW

Daktronics offers the most powerful and easy-to-use dynamic message sign (DMS) controllers in the ITS industry. One of our strengths has always been developing feature-rich, high-performance sign controllers at a reasonable price. Daktronics controllers set the standard for quality, features and maintainability.
The VFC is a state-of-the-art DMS controller that simplifies system installation, operation and maintenance. It includes integrated peripherals, like communication devices, a front panel with keypad and full-color LCD. Built-in Ethernet ports allow for straightforward network access. The interactive front panel eliminates the use of a laptop in most cases.

The menu provides access to the current status of the DMS systems and can create, activate or delete messages, blank the DMS and perform diagnostic tests. The high-contrast full-color backlit LCD panel can be used day or night and provides an accurate visual representation of DMS messages. Configuration can be backed up and restored from a USB thumb drive.

The controller includes an LED power indicator and menus for status information, local/remote mode selection and reset options. Serial ports allow for NTCIP control through a laptop.

The VFC controls Vanguard DMS models, regardless of model, size or color capability. This interchangeability reduces spare parts and simplifies maintenance.

The VFC is capable of independently controlling up to 8 DMS in a single location. Multiple sign control adds flexibility when cabinet space is at a premium. Display signal fiber is connected with a redundant signal path for high reliability and performance.

The compact dimensions of the VFC provide multiple space-saving mounting options. One 2RU space can contain a controller with a communication shelf, a controller with fiber termination block or side-by-side controller installation.




## HIGHLIGHTS

### GENERAL

- NTCIP-compliant and tested
- NEMA TS 4-compliant and tested
- Interactive front panel menu system
- Mounts side-by-side in standard 19-inch rack (2RU)

### RELIABLE

- NEMA TS 4 operating temperature range (-34°C to 74°C)
- Surge protection for communication signals and power
- Redundant fiber-optic signal path provides reliability and eliminates electromagnetic interference

### MAINTENANCE FRIENDLY

- Backlit high-contrast full-color LCD
- Backup/restore configuration from USB thumb drive
- Real-time sign monitor
- Monitor and diagnose component subsystems
- Power, communication, heartbeat and local/remote mode indicators
- Compact and lightweight

### INTEGRATED COMMUNICATIONS

- 2 Ethernet ports
- 3 integrated serial ports

DAKTRONICS

# VANGUARD® VFC CONTROLLER

## FEATURES

### GENERAL

- Controls amber and full-color DMS
- Compatible with Daktronics auxiliary control panel
- Multiple sign control for up to 8 DMS

### DIAGNOSTICS AND MAINTENANCE

- Monitor and diagnose all systems from menu
- Real-time diagnostics for pixels, power systems, fans and other systems
- Monitor temperature, light, door and other in-sign sensors
- Integrated watch-dog circuit
- Real-time message monitor in WYSIWYG format
- Backup/restore configuration from USB thumb drive

### FRONT CONTROL PANEL AND INDICATORS

- LCD Panel
  - Full-matrix (480x272) with graphic capability
  - High-contrast full-color LCD with backlight
- 16 button membrane keypad
- Interactive menu system on LCD/keypad
- Local/remote control selector built into LCD interface
- Illuminated power switch - LED indicator



### MESSAGING

- Create, preview, activate or delete messages from menu
- Capable of any combination of text and graphics
- Stores up to 500 changeable messages
- Stores up to 31 changeable fonts
- Supports scheduling defined in NTCIP
- Full support for these NTCIP Tags:
  - Page Justification (top, middle, bottom)
  - Line Justification (left, middle, right, full)
  - New lines and new pages (6 page max)
  - Page On and Off Times
  - Font Tag
  - Graphics Tag
  - Color foreground and background
  - Color rectangles
  - Page background
  - Text rectanglesAll data fields (date, time, etc)
  - Spacing character
  - Flashing text
  - Scrolling text
  - Hexadecimal character

### COMMUNICATION INTERFACE

- NTCIP-compliant communication ports
- Supports dial-up modem, cellular modem, direct serial, fiber optic, radio and other communication networks
- Integrated 10/100Base-T Ethernet port (RJ-45)
- Integrated 10/100Base-T Ethernet auxiliary port (RJ-45)
- 3 integrated RS232 serial ports (DB-9)
- All ports protected from electromagnetic transients

### CONTROLLER-TO-SIGN INTERFACE

- Multi-mode fiber optic cable
- 50/125 µm fiber with LC connectors
- 850 nm wavelength
- Maximum distance: 1640' (500 m)

## PHYSICAL CHARACTERISTICS

### DIMENSIONS (HxWxD) AND WEIGHT

- 3.4375" x 8.75" x 14.0625" (88 mm x 222 mm x 357 mm)
- Weight: 11.0 lbs. (5 kg)

### ENVIRONMENT AND POWER

- NEMA TS 4-compliant and tested
- Operating Temperature Range:
  -30° F to +165° F (-34° C to +74° C)
- Power Source: 120 or 240 VAC @ 50 or 60 Hz
  o Auto-ranging power supply
- Max. Power Consumption: 30 W
- Power lines protected from electromagnetic transients

### NTCIP STANDARDS

- NTCIP 1101: Simple Trans. Mgmt. Framework (STMF)
- NTCIP 1102: Octet Encoding Rules
- NTCIP 1103: Transportation Mgmt. Protocols
- NTCIP 1201: Global Object Definitions
- NTCIP 1203: DMS Object Definitions
- NTCIP 2001: Class B Profile
- NTCIP 2101: PMPP/RS232 Subnetwork Profile
- NTCIP 2104: Ethernet Subnetwork Profile
- NTCIP 2201: Null Transportation Profile
- NTCIP 2202: TCP/IP & UDP/IP Transport Profile
- NTCIP 2301: Simple Trans. Mgmt. Framework (STMF)
- NTCIP 8004: Structures of Mgmt. Information (SMI)

117 Prince Drive PO Box 5120 Brookings, SD 57006
tel 800-833-3157 605-692-0200 fax 605-697-4700
www.daktronics.com/its email transportation@daktronics.com
Copyright © 2022 Daktronics DD2508962 Rev08 021122

DAKTRONICS

# Cut Sheet 10

# DAKTRONICS
# FIBER-OPTIC COMMUNICATIONS CABLE SPECIFICATIONS

Fiber and Ends provided by Others

**Fiber:**

- 62.5/125 um graded index, for standard systems
- 50/125 um graded index, laser optimized, for high definition or V-Max™ 4 protocol
- PVC outer jacket
- 3db/KM attenuation
- 850/1310 nm wave length
- 900 um diameter secondary buffer
- Tight buffer
- Minimum bend radius 4.95" (12.5 cm)
- Operating temperature: -40 degrees to +85 degrees Celsius
- Preferred Manufacturers: Optical Cable Corporation - DX Series, Belden, Corning.
- UL listed
- Meets NEC sections 770-51 (b) and (c) and 770-53 (b) and (c) Suitable for use in:
  - Indoor/Outdoor
  - Underground duct
  - Building riser
  - Plenum available upon request

| Standard Color Code: | |
|---|---|
| 1 | Blue |
| 2 | Orange |
| 3 | Green |
| 4 | Brown |
| 5 | Slate |
| 6 | White |
| 7 | Red |
| 8 | Black |
| 9 | Yellow |
| 10 | Violet |
| 11 | Rose |
| 12 | Aqua |

| Cable Diameters: | 62.5/125 um | 50.5/125 um |
|---|---|---|
| 2 fiber O.D., .28" (7 mm) | W-1242 | — |
| 4 fiber O.D., .31" (5 mm) | W-1376 | W-1494 |
| 6 fiber O.D., .22" (5.5 mm) | W-1456 | W-1489 |
| 12 fiber O.D., .26" (6.5 mm) | W-1481 | W-1490 |
| 24 fiber O.D., .33" (8.5 mm) | — | — |

| Connector Style | Fiber Type | Connector Type | Manufacturer Part Number | Daktronics Part Number |
|---|---|---|---|---|
| ST | 62.5/125 um | Non-polish | Amp/492168-1 | P-1235 |
| ST | 62.5/125 um | 3M Hotmelt | 3M/6100 | P-1264 |
| ST | 62.5/125 um | Unicam | Corning/95-000-51 | P-1293 |
| LC | 62.5/125 um | Unicam | Corning/95-000-98 | P-1285 |
| ST | 50/125 um | Unicam | Corning/95-050-51 | P-1287 |
| LC | 50/125 um | Unicam | Corning/95-050-99-X | P-1286 |

331 32nd Avenue, PO Box 5128, Brookings, SD 57006
Phone: 605-697-4300 or 800-DAKTRONICS Fax: 605-697-4700
www.daktronics.com E-mail: sales@daktronics.com
V-Max™ is a registered trademark of Daktronics, Inc.
Copyright © 2005 SL-02701 Rev01 022305

DAKTRONICS®

# Cut Sheet 11

# Product data sheet
## Characteristics

# QO112M100P
## QO LoadCenter, PoN, main breaker, 100 A, 1 PH, 12 SP, NEMA1

Product availability : Stock - Normally stocked in distribution facility

Price** : 330.00 USD



## Main

| | |
|---|---|
| Product | Load Center |
| Marketing Trade Name | QO |

## Complementary

| | |
|---|---|
| Load Center Type | Main breaker |
| Line Rated Current | 100 A |
| Number of spaces | 12 |
| Short Circuit Current Rating | 22 kA |
| Maximum Number of Single Pole Circuits | 12 |
| Maximum Number of Tandem Breakers | 12 |
| Number of Phases | 1 phase |
| Box number | 5 |
| Height | 378.97 mm (14.92 in) |
| Width | 361.95 mm (14.25 in) |
| Depth | 95.25 mm (3.75 in) |

## Environment

| | |
|---|---|
| Enclosure Rating | NEMA 1 |
| Ambient air temperature for operation | 23 °F (-5 °C)<br>104 °F (40 °C) |

## Ordering and shipping details

| | |
|---|---|
| Category | 10001 - QO PON 1PH LC,12-60 CKT, MB N1 |
| Discount Schedule | DE3A |

Disclaimer: This documentation is not intended as a substitute for and is not to be used for determining suitability or reliability of these products for specific user applications

| | |
|---|---|
| GTIN | 00785901595878 |
| Package weight(Lbs) | 0.45 kg (1 lb(US)) |
| Returnability | Yes |

# Cut Sheet 12

MECHATRONICS®

# UF12A series

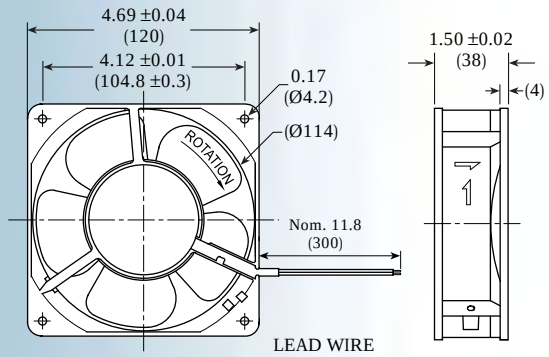


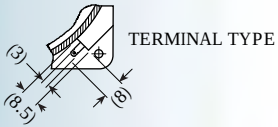


Size: (120 x 120 x 38 mm)
4.69 x 4.69 x 1.5 inches

Operating voltage (VAC): 115 or 230

| | |
|---|---|
| Construction: | aluminum die cast frame; UL94V-0 PBT impeller |
| Bearing option: | motor quality ball bearings or sintered bronze sleeve |
| Motor: | shaded pole |
| Air flow: | exhaust over struts |
| Connection: | terminal or 22 AWG lead wire |
| Protection: | impedance |

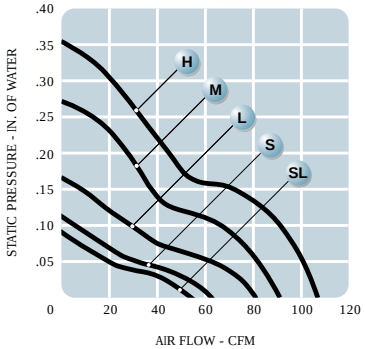


| Model No. | Rated Voltage V | Freq. HZ | Input Power W | Rated Cur. A | Locked Cur. A | Speed RPM | Air Volume $M^3$/Min | Air Volume CFM | Max Static Pressure ($H_2O$) MM | Max Static Pressure ($H_2O$) INCH | Sound Noise dB | Wt OZ |
|---|---|---|---|---|---|---|---|---|---|---|---|---|
| UF12A12-__H | 115 | 60 | 12 | 0.16 | 0.23 | 3,100 | 3.0 | 106 | 8.7 | 0.35 | 46 | 18.7 |
| UF12A23-__H | 230 | 60 | 15 | 0.08 | 0.12 | 3,100 | 3.0 | 106 | 8.7 | 0.35 | 46 | 18.7 |
| UF12A12-__M | 115 | 60 | 12 | 0.17 | 0.19 | 2,750 | 2.6 | 92 | 7.0 | 0.28 | 42 | 18.7 |
| UF12A23-__M | 230 | 60 | 15 | 0.08 | 0.09 | 2,750 | 2.6 | 92 | 7.0 | 0.28 | 42 | 18.7 |
| UF12A12-__L | 115 | 60 | 12 | 0.15 | 0.16 | 2,300 | 2.3 | 81 | 4.0 | 0.16 | 38 | 18.7 |
| UF12A23-__L | 230 | 60 | 15 | 0.07 | 0.08 | 2,300 | 2.3 | 81 | 4.0 | 0.16 | 38 | 18.7 |
| UF12A12-__S | 115 | 60 | 8 | 0.08 | 0.09 | 2,100 | 1.8 | 64 | 2.8 | 0.11 | 37 | 18.7 |
| UF12A23-__S | 230 | 60 | 8 | 0.04 | 0.05 | 2,100 | 1.8 | 64 | 2.8 | 0.11 | 37 | 18.7 |
| UF12A12-__SL | 115 | 60 | 6 | 0.06 | 0.07 | 1,800 | 1.6 | 57 | 2.3 | 0.09 | 36 | 18.7 |
| UF12A23-__SL | 230 | 60 | 6 | 0.03 | 0.04 | 1,800 | 1.6 | 57 | 2.3 | 0.09 | 36 | 18.7 |

# Cut Sheet 13

# TYPE AMF SERIES

FOAM & ALUMINUM FILTERS

EN-1632 or EN-1633 will be used in the TC (if applicable)

**FILTERS AIRBORNE PARTICULATE**

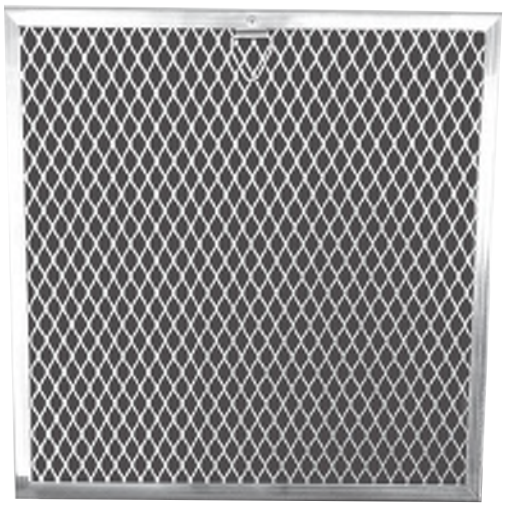

**AVAILABLE IN ONE ALLOY**

## TYPE AMF SERIES

Aluminum

**Application:** The **TYPE AMF SERIES FOAM & ALUMINUM FILTER** line is created for the design engineer to solve most applications where a permanent and washable filter is required. Unique to this line is the ability to create a foam media pack to meet the airflow restrictions and filter efficiency requirements for most applications. The filters is commonly used in Food & Beverage machines, Medical Equipment, Electronic Enclosures, Portable Power Supplies and Telecommunication Cabinets.

**Construction:** The Type AMF Series filter uses an aluminum frame to enclose a media pack. The frame is made with mitered corners and is secured with pop-rivet(s). The media pack is comprised of single or multiple layers of polyurethane reticulated filter foam surrounded by two expanded aluminum support grids. Refer to the back page of the Tech Sheet for detailed information on Filter Foam.

What makes the product line unique is our ability to draw from seven standard frame configurations and six foam porosities to create a filter assembly that meets the exact requirements of your application. Add to this our capability to offer standard mounting hardware or create and manufacture custom mounting hardware, thereby allowing American Metal Filter Company to manufacture the filter entirely in-house. Finally, we provide a service to Anodize or Chem-Film the aluminum components to MIL-SPECS when the filters are installed in corrosive environments.

Due to continuing research and development, we reserve the right to make modifications to any product.

### PRODUCT HIGHLIGHTS

- Multiple Foam Configurations Available
- Use 10 ppi up to 100 ppi Filter Foam
- Washable and Reusable
- Mounting Hardware Available
- Anodizing and Chem-Film to Mil-Specs Available

### FAST FACTS

**LEAD TIME:**
7-10 Days

**MINIMUM ORDER:**
No Minimum Order

**SIZING OPTIONS:**
Custom Sizes Available
*Please see reverse side for details.*

**CLASSIFICATION:**
UL 900 Class 2

# TYPE AMF SERIES ~ Filter Selection Chart

**ALUMINUM ALLOY 3003 H-14**

| | FRAME | | SUPORT GRID | |
|---|---|---|---|---|
| MODEL | DIMENSIONS | THICKNESS | DIAMOND | STRAND FEED |
| AMF250 | .44" X .250" X .44" | .025" | .50" x 1.00" | .040" |
| AMF312 | .44" X .312" X .44" | .025" | .50" x 1.00" | .040" |
| AMF375 | .44" X .375" X .44" | .025" | .50" x 1.00" | .040" |
| AMF437 | .44" X .437" X .44" | .025" | .50" x 1.00" | .040" |
| AMF500 | .44" X .500" X .44" | .025" | .50" x 1.00" | .040" |
| AMF750 | .69" X .750" X .69" | .030" | .50" x 1.00" | .040" |
| AMF875 | .69" X .875" X .69" | .030" | .50" x 1.00" | .040" |

**POLYURETHANE RETICULATED FILTER FOAM with FR**

| | .25" THICK | | .50" THICK | |
|---|---|---|---|---|
| POROSITY | INITIAL RESISTANCE | ARRESTANCE | INITIAL RESISTANCE | ARRESTANCE |
| 10 ppi | .01" w.g. | 38% | .03" w.g. | 63% |
| 25 ppi | .03" w.g. | 61% | .08" w.g. | 82% |
| 45 ppi | .05" w.g. | 77% | .16" w.g. | 91% |
| 60 ppi | .12" w.g. | 82% | .25" w.g. | 91% |

## TYPE AMF SERIES NOTES

### SIZING INFORMATION

* What does Nominal mean? Standard size filters are of a nominal dimension. This means the height, width and thickness dimensions are undercut by a certain amount. See below for the exact amount of undercut for each dimension.

1. Purchase filters using the exact height, width and thickness dimensions to eliminate any confusion when ordering.
2. Tolerance height and width: +/- 1/8"
3. Tolerance thickness: +/- 1/32"
4. Tolerance foam porosity +/- 5 ppi.
5. Tolerance for .XX = +/- .060" unless otherwise noted.
6. Tolerance for .XXX = +/- .030" unless otherwise noted.

### CLASSIFICATION AND TEST NOTES

1. The Type AMF Series filter is listed as UL 900 Class 2.
2. Recommended final resistance is .50" w.g.
3. Resistance is measured in inches water gauge (w.g.).
4. Arrestance percentage is measured by average synthetic dust weight.
5. Performance tests conform to ASHRAE Standard 52.1-1992 @ 300 fpm face velocity.

### FILTER CLEANING

1. To clean a dirty filter, rinse it with a moderate-to-heavy stream of warm water. High-powered steam cleaning or chemical dips are unnecessary and not recommended.

### INSTALLATION CONSIDERATIONS

1. The Type AMF Series filters may be installed in HVAC systems vertically or horizontally.

### ADDITIONAL INFORMATION

1. All metal and components are sourced within the domestic United States.
2. All filters are assembled in Chula Vista, CA.



### FILTER FOAM

Filter Foam is available in pores per inch (ppi) from 5 to 100. These are reticulated flexible polyester urethane foams. Unlike ordinary urethane foams, they have a three-dimensional structure of skeletal strands, which give them special filtering qualities.

Filter foams have low pressure drop due to the open-pore skeletal structure, but the biggest benefit is the high dust-holding capacity. The skeletal structure allows 97% of a cell to be available for dust-holding, while the remaining 3% is the cells structure.

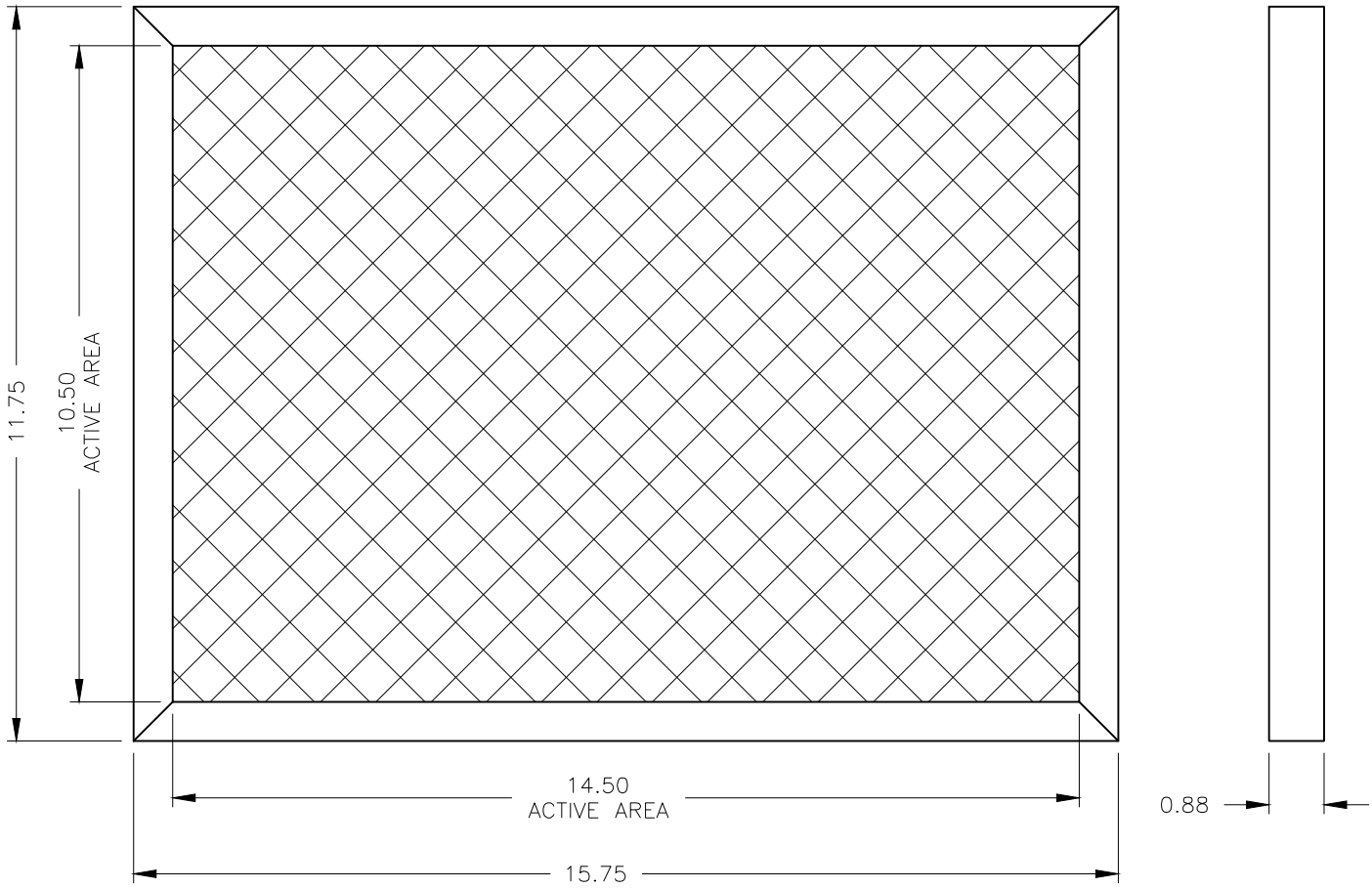


FRONT VIEW

SIDE VIEW

SPECIFICATIONS:

DAKTRONICS PART NUMBER EN-1632

11.75" x 15.75" x 0.88"

TWO STAGE OPEN CELL MEDIA

1/4" THICK BLACK 10 PPI FOAM ON UPSTREAM SIDE
1/4" THICK BLACK 25 PPI FOAM ON DOWNSTREAM SIDE

ALUMINUM FRAME
ALUMINUM UNIGRID SUPPORT ON BOTH SIDES

CLEANABLE, RATED UL 900 CLASS 2.

1.06 SQ FT ACTIVE AREA

STATIC PRESSURE DROP
0.055 IN H2O @300 FPM

| REV | DATE: | | BY: | |
|---|---|---|---|---|
| 03 | 18OCT13 | REMOVED VENDOR FROM NOTES PER MRF-4260 | JPH | |
| 02 | 11JAN00 | CHANGED FROM 20 AND 45 PPI FOAM TO 10 AND 25 PPI BLACK FOAM ADDED ACTIVE AREA | BJV | |
| 01 | 25AUG95 | CHANGED PART NO FROM A-1401 TO EN-1632 | WRT | |

DAKTRONICS, INC.
BROOKINGS, SD 57006
DO NOT SCALE DRAWING

THE CONCEPTS EXPRESSED AND DETAILS SHOWN ON THIS DRAWING ARE CONFIDENTIAL AND PROPRIETARY. DO NOT REPRODUCE BY ANY MEANS WITHOUT THE EXPRESSED WRITTEN CONSENT OF DAKTRONICS, INC.
COPYRIGHT 2013 DAKTRONICS, INC.

PROJ: VANGUARD
TITLE: AIR FILTER- 11.75" X 15.75" X 0.88"
DESIGN: | DRAWN: C FICKBOHM | DATE: 8DEC94
SCALE: 1=3

| SHEET | REV | JOB NO: | FUNC-TYPE-SIZE | |
|---|---|---|---|---|
| 1 OF 1 | 03 | P1000 | V-07-A | 66902 |

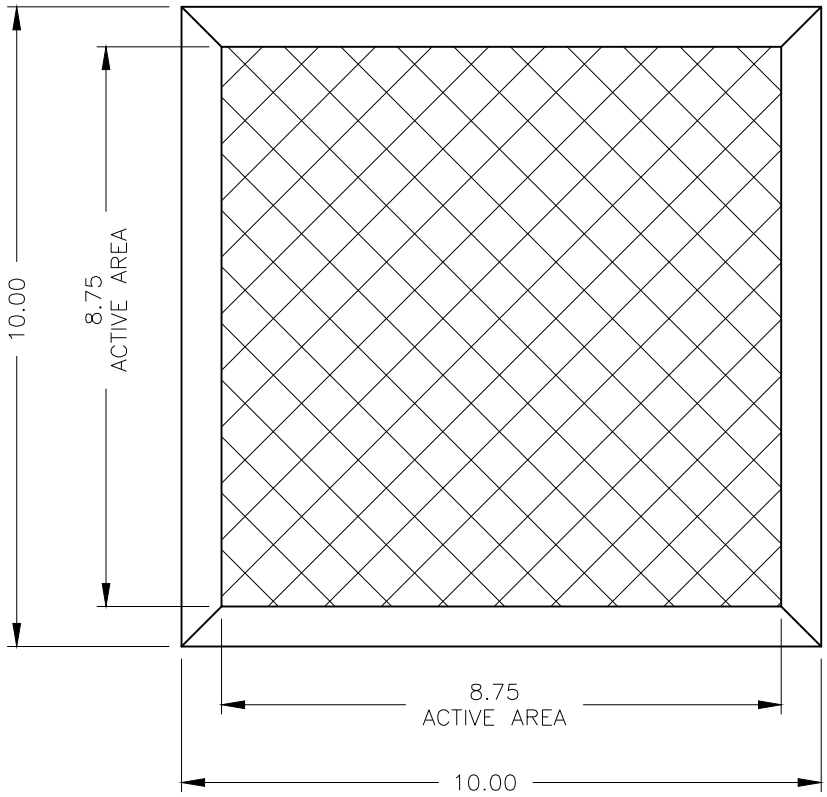


FRONT VIEW

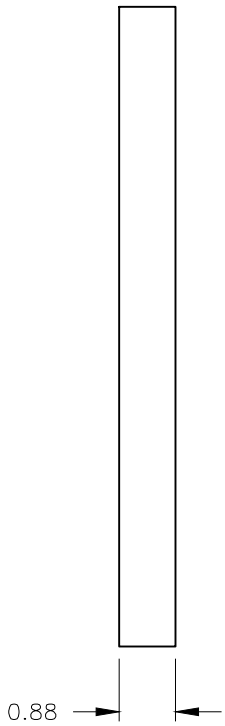


SIDE VIEW

SPECIFICATIONS:

DAKTRONICS PART NUMBER EN-1633

10.00" x 10.00" x 0.88"

TWO STAGE OPEN CELL MEDIA

1/4" THICK BLACK 10 PPI FOAM ON UPSTREAM SIDE
1/4" THICK BLACK 25 PPI FOAM ON DOWNSTREAM SIDE

ALUMINUM FRAME
ALUMINUM UNIGRID SUPPORT ON BOTH SIDES

CLEANABLE, RATED UL 900 CLASS 2.

0.53 SQ FT ACTIVE AREA

STATIC PRESSURE DROP
0.055 IN H2O @300 FPM

| REV | DATE: | | BY: | |
|---|---|---|---|---|
| 03 | 18OCT13 | REMOVED VENDOR FROM NOTES PER MRF-4260 | JPH | |
| 02 | 11JAN00 | CHANGED FROM 20 AND 45 PPI FOAM TO 10 AND 25 PPI BLACK FOAM. ADDED ACTIVE AREA. | BJV | |
| 01 | 25AUG95 | CHANGED PART NO FROM A-1450 TO EN-1633 | WRT | |

DAKTRONICS, INC.
BROOKINGS, SD 57006
DO NOT SCALE DRAWING

THE CONCEPTS EXPRESSED AND DETAILS SHOWN ON THIS DRAWING ARE CONFIDENTIAL AND PROPRIETARY. DO NOT REPRODUCE BY ANY MEANS WITHOUT THE EXPRESSED WRITTEN CONSENT OF DAKTRONICS, INC.
COPYRIGHT 2013 DAKTRONICS, INC.

| | | | |
|---|---|---|---|
| PROJ: VANGUARD | | | |
| TITLE: AIR FILTER: 10.00" X 10.00" X 0.88" | | | |
| DESIGN: | DRAWN: WTUCKER | DATE: 23AUG95 | |
| SCALE: 1=3 | | | |

| SHEET | REV | JOB NO: | FUNC-TYPE-SIZE | |
|---|---|---|---|---|
| | 02 | P1000 | V-07-A | 74357 |

# Cut Sheet 14

WLB32ZC285QM

# WLB32 Industrial LED Light Bar (AC)

## Datasheet

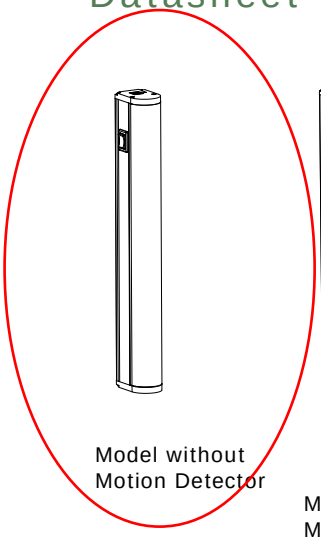

Model without Motion Detector

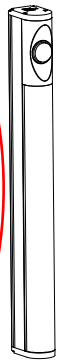

Model with Motion Detector

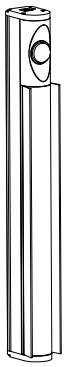

Model with Eye Shield and Motion Detector

Banner's WLB32 is an ultra-bright LED fixture that features an even light output for a no glare 'glow'. Suitable for a variety of environments and applications, including work stations, machine lighting, control cabinets, and manufacturing lines, the WLB32 uses advanced LED lighting technology to provide a high-quality and maintenance free industrial lighting solution for years.

- Highly energy efficient for overall cost savings
- High/Low/Off switch
- Models with eye shield block side glare
- Daisy chain power to multiple lights
- Motion detection models available
- Metal housing, shatterproof window
- Easy installation with snap clips, or a choice of magnetic or angle brackets

WLB32 Industrial LED Light Bars are available as cascadable models that can be "daisy-chained" together for a continuous length of lighting, with a minimum of wiring. Each light bar can be turned to high, low, or off independently of the other lights, upstream or downstream, in the chain. A double-ended accessory cordset must be used between each pair of cascading lights.

| 90 to 264 V ac Models | | | |
|---|---|---|---|
| Models | Lighted Length (mm) | Connector | Lumens |
| WLB32ZC285PBQMB | 285 | Custom Quick Disconnect | 650 |
| WLB32ZC570PBQMB | 570 | | 1300 |
| WLB32ZC850PBQMB | 850 | | 1950 |
| WLB32ZC1130PBQMB | 1130 | | 2600 |

The listed models include a U.S. power cable.

- To order model with no power cable, omit the suffix "B" from the model number. For example, WLB32ZC285PBQM. For a list of other countries' wall plug cables, refer to the Accessories list.
- To order the light without the integral switch, omit the "PB" from the model number. For example, WLB32ZC285QMB.
- To order the light with the integral motion detector, replace the 'PB' from the model number with 'M'. For example, WLB32ZC285MQMB.
- To order the light with the eye shield, add an 'E' after the length. For example, WLB32ZC285EPBQMB.

## Installing the WLB32 AC Series Lights

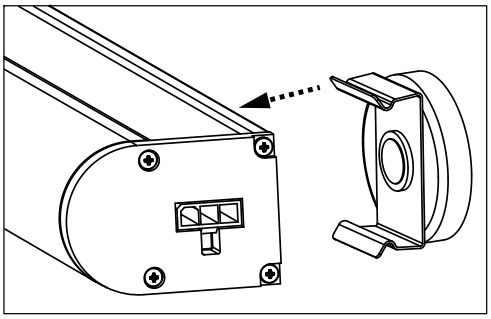

*Figure 1. Attaching the Snap Brackets (Step 1)*

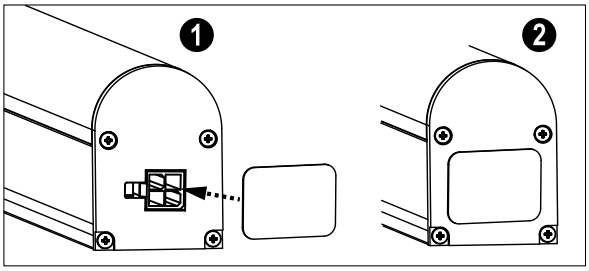


*Figure 2. Installing the Cascade Cover (Step 8)*

1. Attach the snap brackets to the light.
2. Select a suitable horizontal or vertical dry mounting location.
3. Place the light in the mounting location and mark the positions of the snap bracket mounting holes.
4. Drill the holes and use appropriate screws to secure the snap bracket to the mounting location.
5. Snap the light onto the brackets.
6. When daisy chaining multiple lights, follow steps 1 through 5 to mount additional lights. See the application note in the *Specifications* for the maximum allowed lights daisy chained together and maximum allowed cable run when choosing mounting locations.
7. Connect the daisy chained units together using cascade cordsets (see *Accessories*).
8. Install the supplied cascade cover over the output connector on the last light in the chain.
9. Plug the power cord from the first light into the wall outlet.

CAUTION: To reduce the risk of fire, electric shock, or injury to personnel:

- Use only insulated staples or plastic ties to secure cords;
- Route and secure cords so that they will not be pinched or damaged when the cabinet is pushed to the wall;
- Position the portable cabinet light with respect to the cabinet so the lamp replacement markings are able to be read during relamping;
- Do not recess into ceilings or soffits; and
- Do not conceal the cords. The National Electrical Code (NEC) does not permit cords to be concealed where damage to insulation may go unnoticed. To prevent fire danger, do not run cord behind walls, ceilings, soffits, or cabinets where it may be inaccessible for examination. Cords should be visually examined periodically and immediately replaced when any damage is noted.

## Specifications

Operating Voltage

90 to 264 V ac (50 or 60 Hz)
Power factor > 0.95 on high setting at 120 V ac

Supply Current

| Light Length (mm) | Max Current Draw (A) at 90 V ac | Typical Current Draw (A) | |
|---|---|---|---|
| | | 120 V ac | 230 V ac |
| 285 | 0.125 | 0.075 | 0.045 |
| 570 | 0.250 | 0.150 | 0.080 |
| 850 | 0.375 | 0.225 | 0.115 |
| 1130 | 0.500 | 0.300 | 0.150 |

Supply Protection Circuitry
Protected against transient voltages

Light Characteristics
Color: Daylight white
Color temperature (CCT): 5000K (±300K)
Lumen output: 650 (±5%) per foot, typical at 25 °C (77 °F)
CRI: 85 typical
Eye shield reduces lumens by approximately 25%

LED Lifetime
Lumen Maintenance - $L_{70}$
When operating within specifications, output will decrease less than 30% after 50,000 hours.

Push Button
II = 100% light intensity
I = 50% light intensity
O = Standby

Models with Motion Detection
Light turns off after approximately 60 seconds without detecting motion.
Range: 12 m; ±45° field of view
Standby current: 170 µA

Construction
Anodized aluminum housing; polycarbonate window and end caps; stainless steel mounting brackets

Spacing Criterion
Vertical: 1.22
Horizontal: 1.32

Mounting
Snap clips; optional magnetic mount or swivel bracket accessories available

Connections
Integral custom QD (connecting cordset required)

Environmental Rating
IEC IP50

Vibration and Mechanical Shock
Vibration 10-55 Hz 1.0 mm p-p amplitude per IEC60068-2-6
Shock 15G 11 ms duration, half sine wave per IEC60068-2-27

Operating Temperature
–25 °C to +45 °C (–13 °F to 113 °F)
Models with Motion Detection: –20 °C to +45 °C (–4 °F to +113 °F)

Storage Temperature
–40 °C to +70 °C (–40 °F to +158 °F)

Test Data
LM-79, LM-80, TM-21

Certifications

UL Listed only for 120 V ac, 60 Hz

UL Recognized for easy installation in control cabinets

Application Note
When connecting cascadable lights in series, do not exceed the maximum unit limit of 10, regardless of light size, and do not exceed a maximum wiring distance of 100 m (328 ft)

## Spacing Criteria (SC)

The spacing criteria is the fixture-spacing-to-mounting-height ratio and aids in laying out a pattern of fixtures. Multiply the spacing criteria by the mounting height to get the maximum fixture spacing that still provides even illumination (no shadowing between fixtures).

Luminaire Spacing = SC × Height to Illuminated Plane

The mounting height is the distance from the fixture to the surface you are lighting.

## Light Characteristics

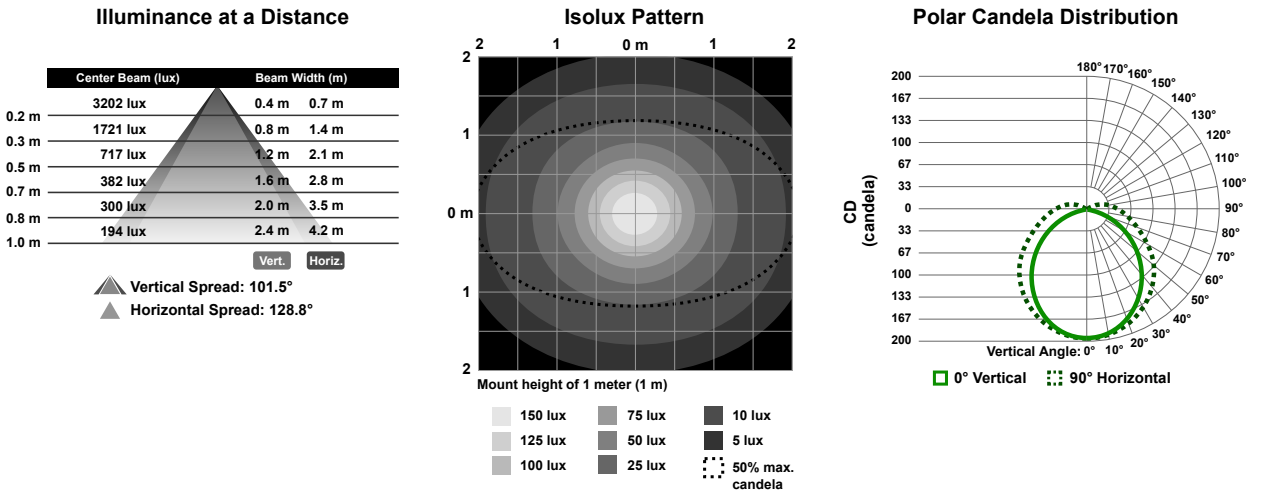


*Figure 3. 285 mm Models*

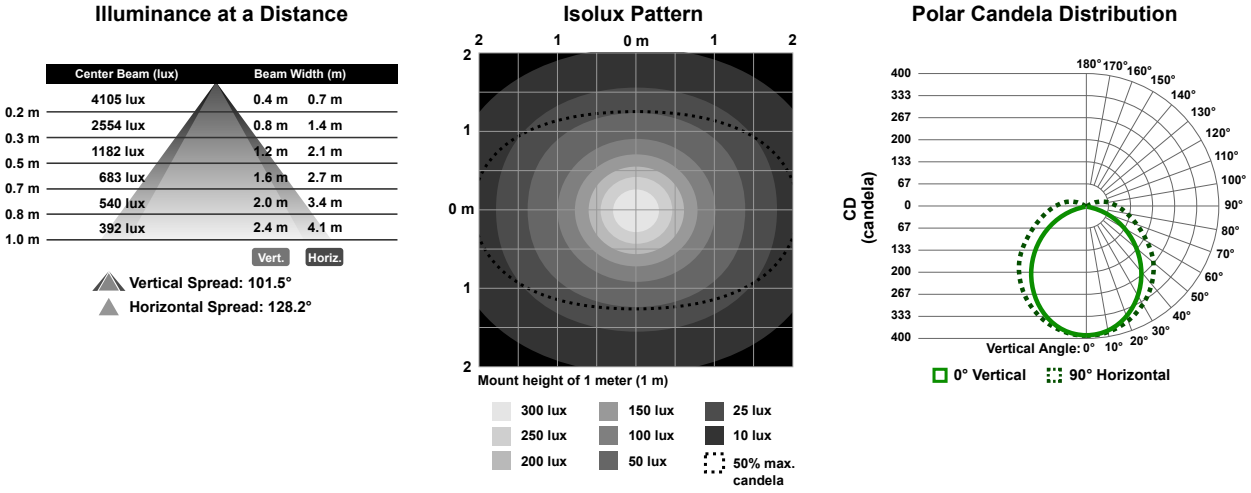


*Figure 4. 570 mm Models*

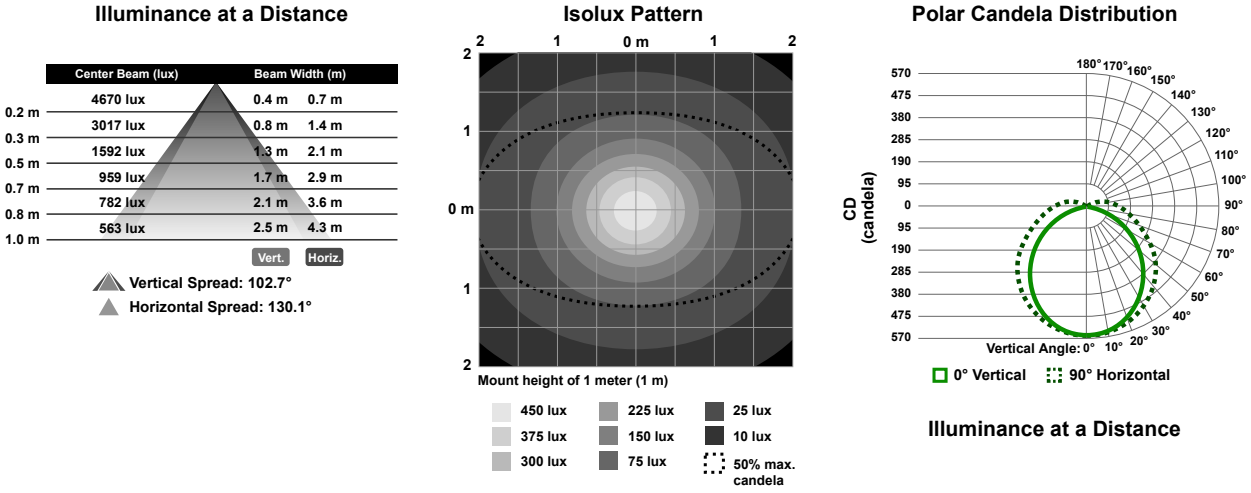


*Figure 5. 850 mm Models*

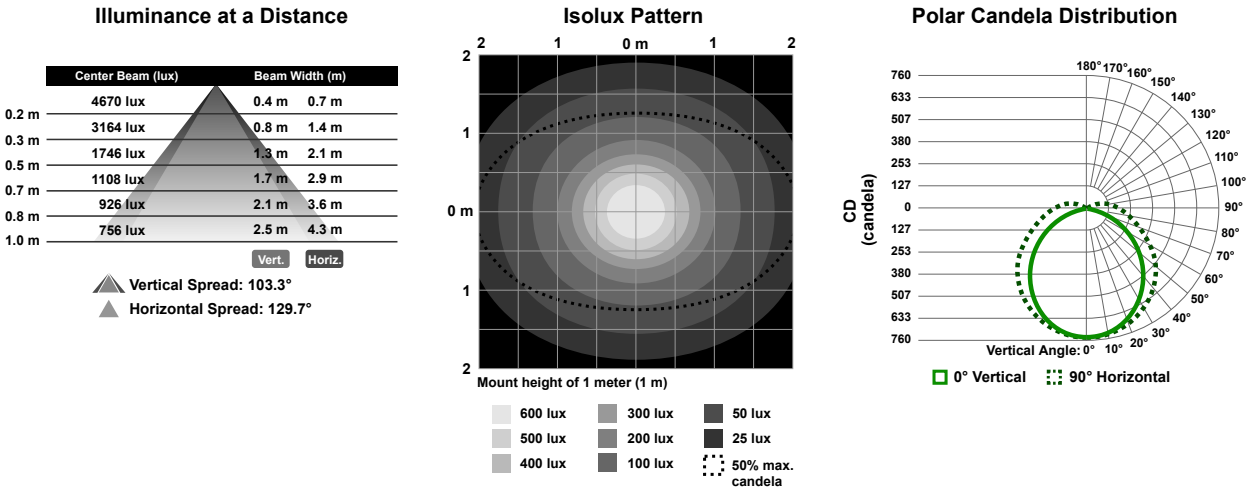


*Figure 6. 1130 mm Models*

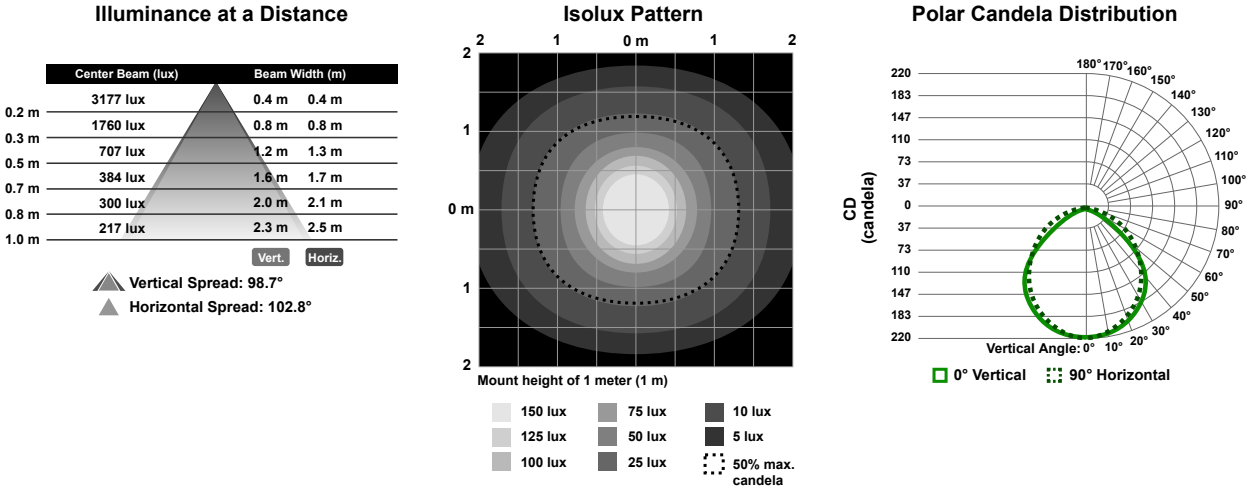


*Figure 7. 285 mm Models with Eye Shields*

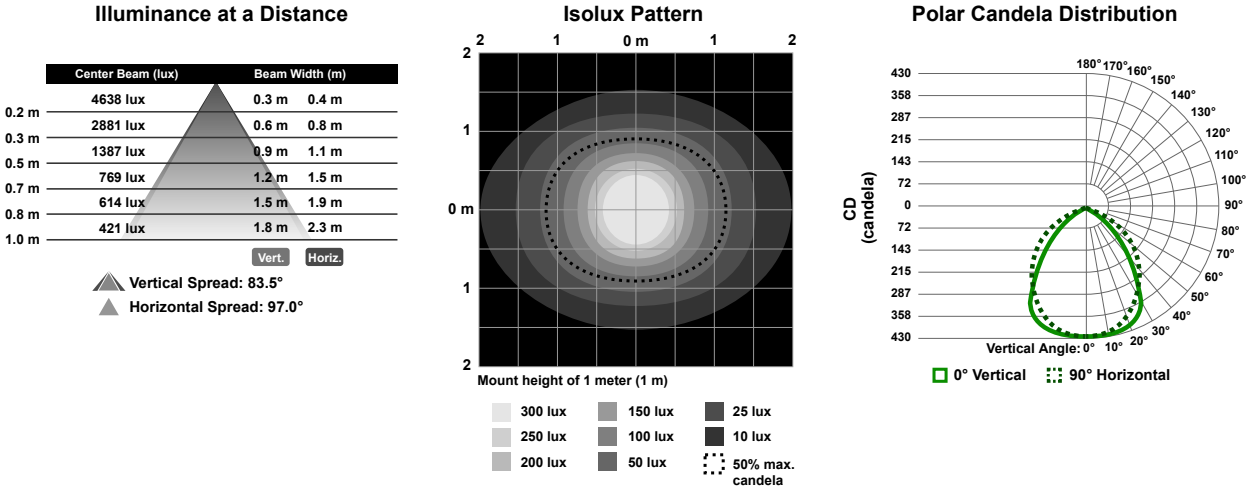


*Figure 8. 570 mm Models with Eye Shields*

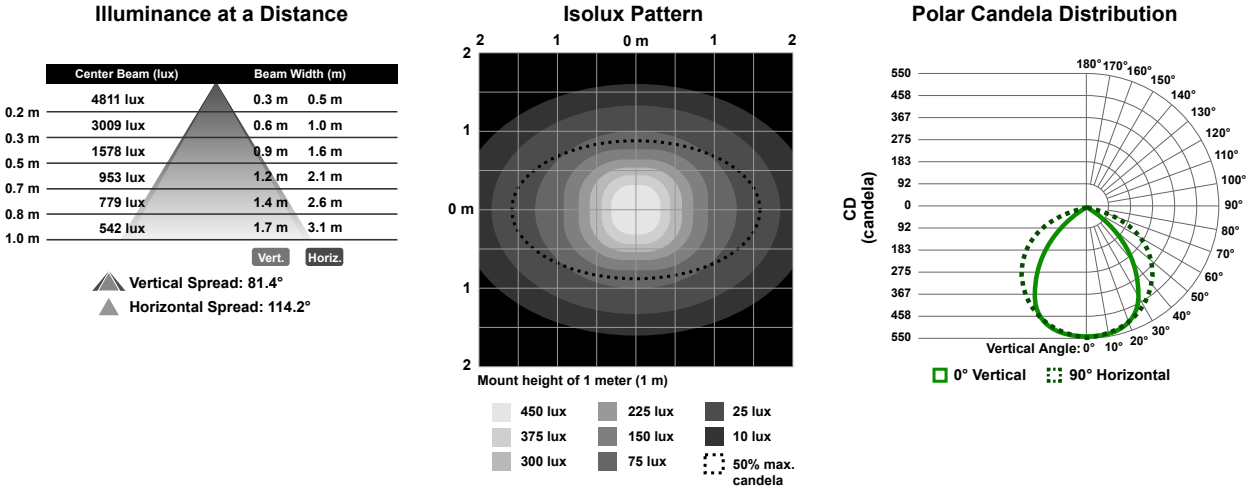


*Figure 9. 850 mm Models with Eye Shields*

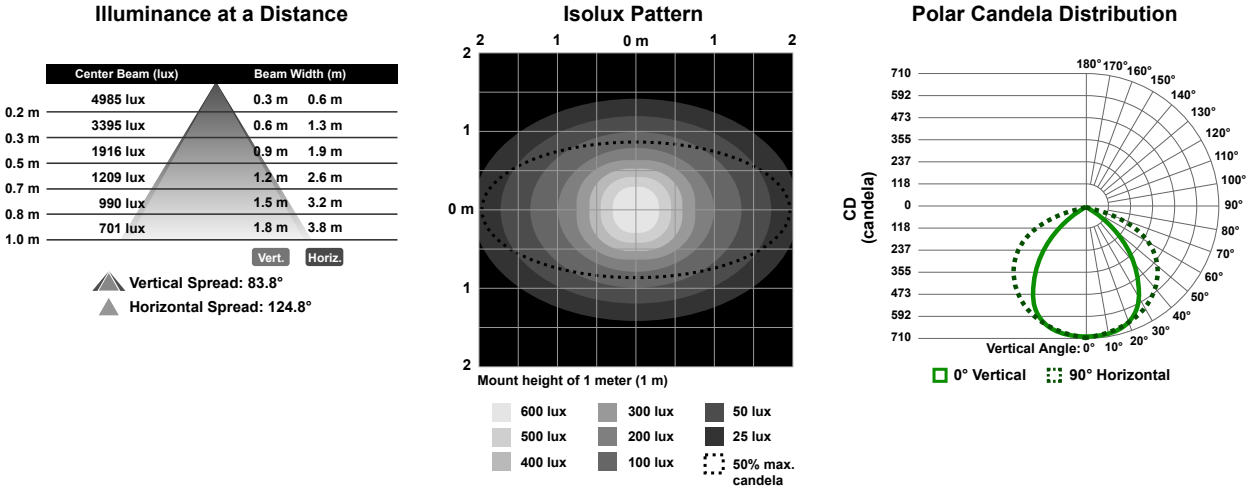


*Figure 10. 1130 mm Models with Eye Shields*

## Dimensions

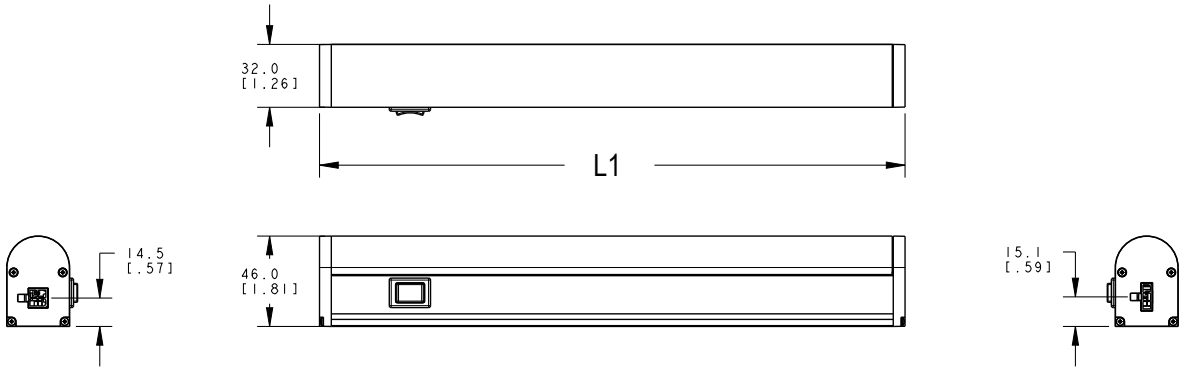


### Motion Detector and/or Eye Shield Models

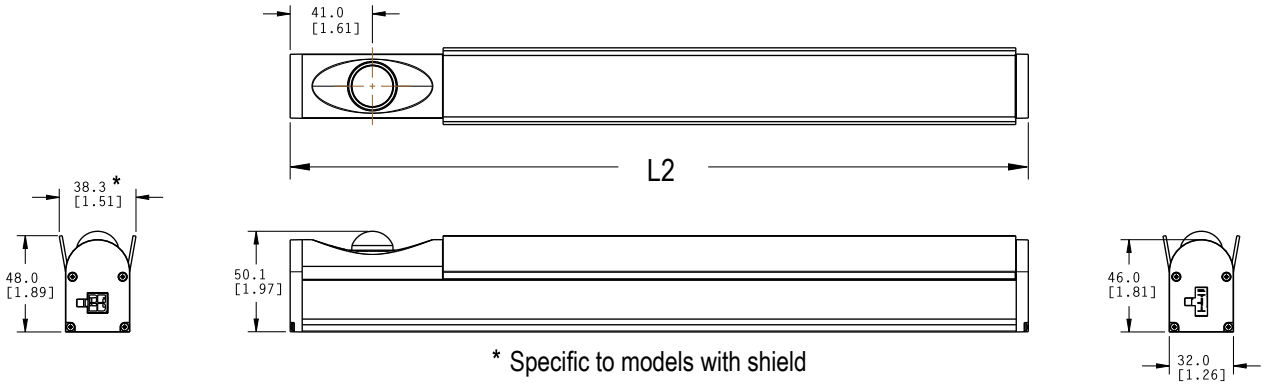


| Model | Models without Motion Detector | Models with Motion Detector and/or Eye Shield |
|---|---|---|
| | L1 | L2 |
| WLB32ZC285..QM | 298 mm (11.7 in) | 368 mm (14.5 in) |
| WLB32ZC570..QM | 580 mm (22.8 in) | 650 mm (25.6 in) |
| WLB32ZC850..QM | 862 mm (33.9 in) | 932 mm (36.7 in) |

| Model | Models without Motion Detector | Models with Motion Detector and/or Eye Shield |
|---|---|---|
| | L1 | L2 |
| WLB32ZC1130..QM | 1144 mm (45.0 in) | 1214 mm (47.8 in) |

## Accessories

| Wall Plug Cordsets | | | | |
|---|---|---|---|---|
| Model | Plug Type | Countries | Length | Dimensions |
| LQMAC-306 | Flying Leads | | 1.8 m (6 ft) | 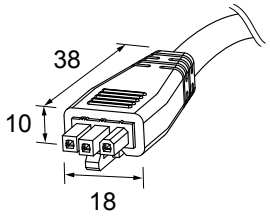 |
| LQMAC-306B | NEMA 5-15 grounded (IEC Type B) | United States, Canada, Japan, Puerto Rico, Taiwan | | |
| LQMAC-306D | BS 546 (IEC Type D) | India | | |
| LQMAC-306EF | CEE 7/7 (IEC Type E or F) | Germany, France, South Korea, The Netherlands, Poland, Spain, Turkey | | |
| LQMAC-306G | BS 1363 (IEC Type G) | United Kingdom, Ireland, Singapore, Vietnam | | |
| LQMAC-306I | AS/NZS 3112 (IEC Type I) | China, Australia, New Zealand | | |
| LQMAC-306N | NBR 14136 (IEC Type N) | Brazil | | |
| LQMAC-310B | NEMA 5-15 grounded (IEC Type B) | United States, Canada, Japan, Puerto Rico, Taiwan | 3 m (10 ft) | |

| Continuous Run/Cascade Cordsets | | | |
|---|---|---|---|
| Model | Length | Style | Dimensions |
| LQMAEC-3005SS | 0.15 m (0.5 ft) | Male straight/Male straight | 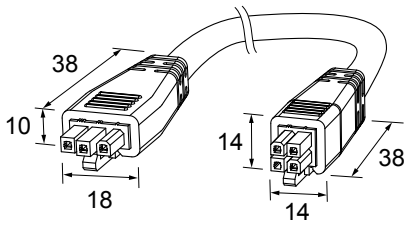 |
| LQMAEC-301SS | 0.31 m (1 ft) | | |
| LQMAEC-303SS | 0.91 m (3 ft) | | |
| LQMAEC-306SS | 1.83 m (6 ft) | | |
| LQMAEC-312SS | 3.66 m (12 ft) | | |
| LQMAEC-320SS | 6.1 m (20 ft) | | |
| LQMAEC-330SS | 9.14 m (30 ft) | | |

### Enclosure Accessories

LMBEDS Switch

- Bracket with plunger switch to power lights when the enclosure is opened
- Refer to datasheet *160672* for more information

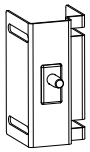

## Mounting Brackets

### LMBWLB32

- Replaces the bracket that ships with the WLB32 light
- Stainless steel
- Includes 4 snap clips, 4 screws, and 2 insulator caps

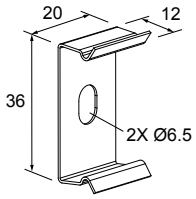


### LMBWLB32-180S

- Swivel bracket kit allows 180° of movement

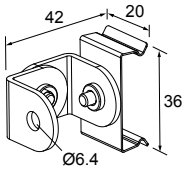


### LMBWLB32MAG

- Magnetic mounting bracket for easy attachment to steel and iron surfaces

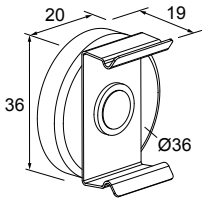


### LMBWLB32U

- Die cast bracket for rugged applications
- Secured to light with included thumb screw
- Clearance hole for 6 mm (1/4 in) button head screw

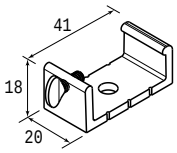


### LMBWLB32UT

- Die cast bracket for rugged applications
- Secured to light with included thumb screw
- Integral 1/4-20 stud for mounting

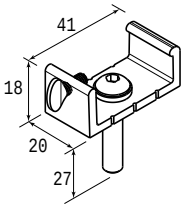


## Banner Engineering Corp. Limited Warranty

Banner Engineering Corp. warrants its products to be free from defects in material and workmanship for one year following the date of shipment. Banner Engineering Corp. will repair or replace, free of charge, any product of its manufacture which, at the time it is returned to the factory, is found to have been defective during the warranty period. This warranty does not cover damage or liability for misuse, abuse, or the improper application or installation of the Banner product.

THIS LIMITED WARRANTY IS EXCLUSIVE AND IN LIEU OF ALL OTHER WARRANTIES WHETHER EXPRESS OR IMPLIED (INCLUDING, WITHOUT LIMITATION, ANY WARRANTY OF MERCHANTABILITY OR FITNESS FOR A PARTICULAR PURPOSE), AND WHETHER ARISING UNDER COURSE OF PERFORMANCE, COURSE OF DEALING OR TRADE USAGE.

This Warranty is exclusive and limited to repair or, at the discretion of Banner Engineering Corp., replacement. IN NO EVENT SHALL BANNER ENGINEERING CORP. BE LIABLE TO BUYER OR ANY OTHER PERSON OR ENTITY FOR ANY EXTRA COSTS, EXPENSES, LOSSES, LOSS OF PROFITS, OR ANY INCIDENTAL, CONSEQUENTIAL OR SPECIAL DAMAGES RESULTING FROM ANY PRODUCT DEFECT OR FROM THE USE OR INABILITY TO USE THE PRODUCT, WHETHER ARISING IN CONTRACT OR WARRANTY, STATUTE, TORT, STRICT LIABILITY, NEGLIGENCE, OR OTHERWISE.

Banner Engineering Corp. reserves the right to change, modify or improve the design of the product without assuming any obligations or liabilities relating to any product previously manufactured by Banner Engineering Corp.

## Copyright Notice

Any misuse, abuse, or improper application or installation of this product or use of the product for personal protection applications when the product is identified as not intended for such purposes will void the product warranty. Any modifications to this product without prior express approval by Banner Engineering Corp will void the product warranties. All specifications published in this document are subject to change; Banner reserves the right to modify product specifications or update documentation at any time. For the most recent version of any documentation, refer to: *www.bannerengineering.com*. © Banner Engineering Corp. All rights reserved.

# Appendix B: Drawings

**Figure 1** is an illustration of a Daktronics drawing label. The drawing number is located in the lower-right corner of the drawing. Drawings are identified by listing the last set of digits and the letter preceding them. In the following example, the drawing is referred to as **Drawing A-114667**.

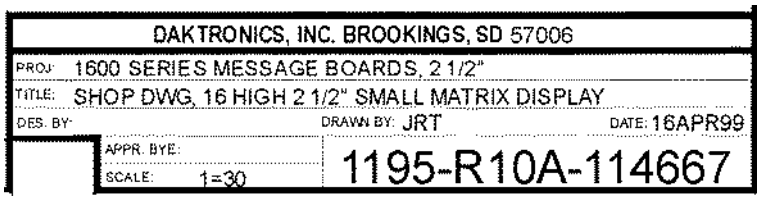


***Figure 1:*** *Daktronics Drawing*

### Shop Drawings

1. Shop Drawing, VF-2420-80x272-20-RGB ..... **Drawing B-3584054**
2. Module Assembly, 16x16 ..... **Drawing B-1110279**
3. Shop Drawing, ACP ..... **Drawing B-1113023**

### Traffic Cabinets

4. Shop Drawing, TC, 334, ALU, GND, VFC ..... **Drawing B-3433901**
5. Shop Drawing, VFC ..... **Drawing B-3055824**
6. Site Riser, 1 VF-2X20, VFC In TC ..... **Drawing B-3686201**

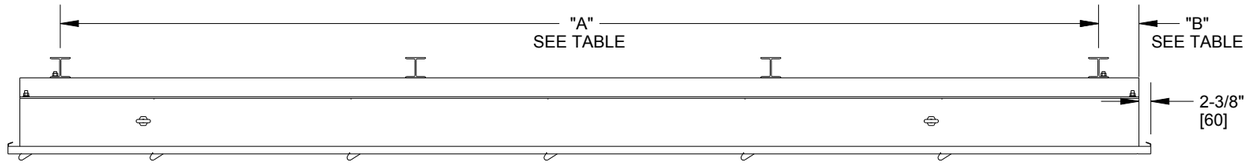


**TOP VIEW**

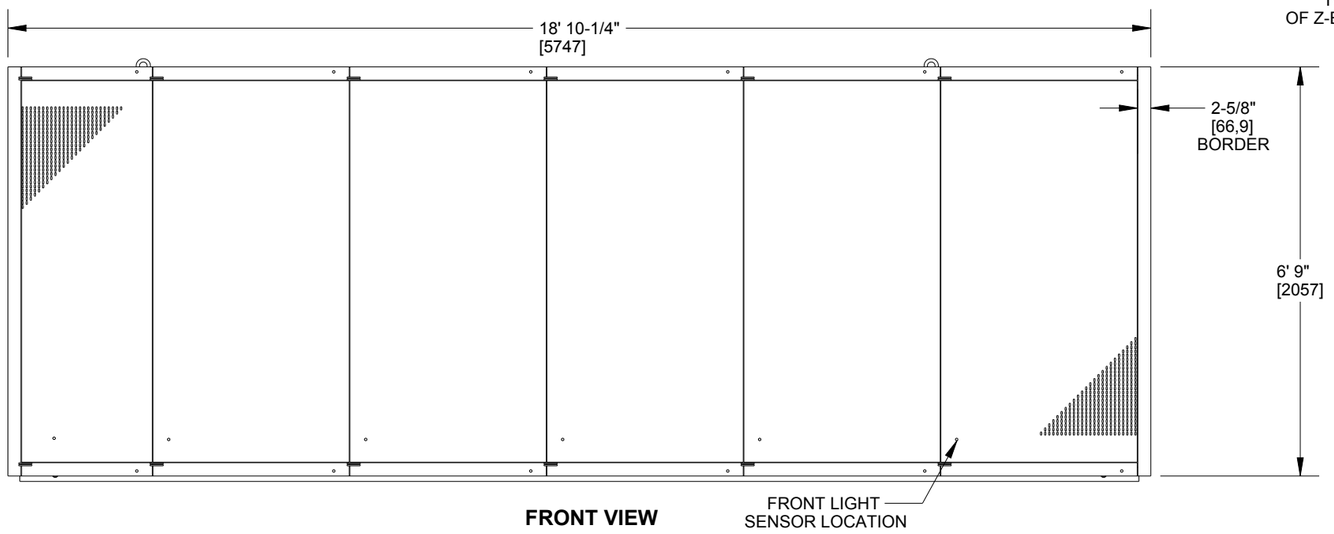


**FRONT VIEW**

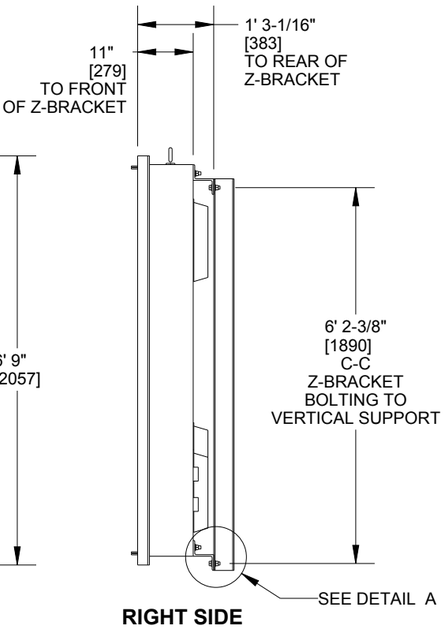


**RIGHT SIDE VIEW**

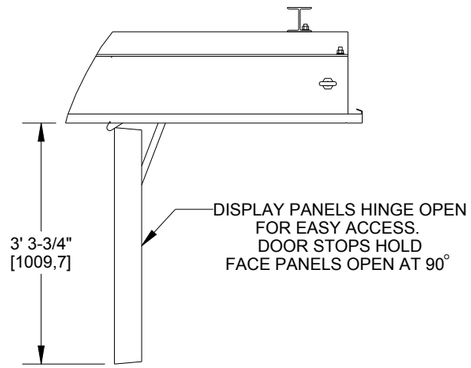


**TOP PARTIAL VIEW**
FACEPANEL OPEN
SCALE 1/25

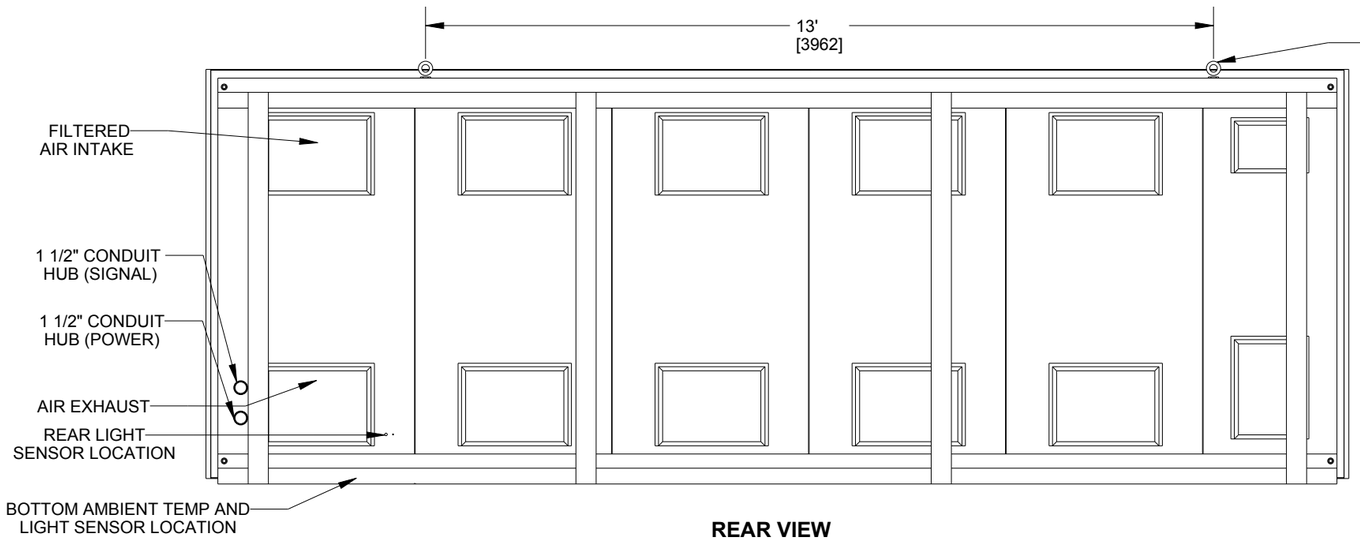


**REAR VIEW**

WHEN LIFTING DISPLAY WITH LIFT EYES USE SPREADER BEAM.

IF LIFT EYES ARE REMOVED AFTER INSTALLATION THEY SHOULD BE REPLACED WITH SS BOLTS TO PREVENT DEBRIS BUILDUP IN THE THREADS OF THE PERMANENT HARDWARE. THIS DOES NOT EFFECT WATER TIGHTNESS.

**VERTICAL SUPPORTS & MOUNTING HARDWARE (PROVIDED BY OTHERS)**

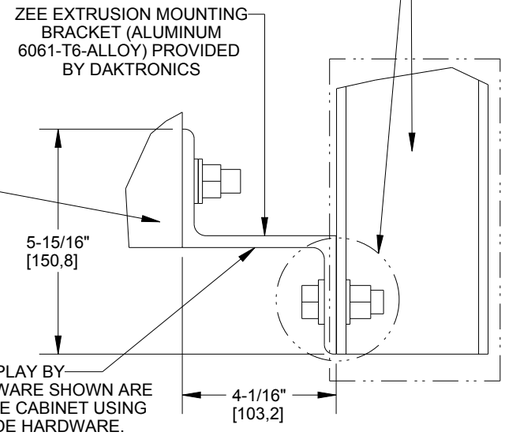


Z-BRACKETS ARE BOLTED TO THE REAR OF THE DISPLAY BY DAKTRONICS. THE VERTICAL SUPPORTS AND MOUNTING HARDWARE SHOWN ARE PROVIDED BY OTHERS. EACH Z-BRACKET IS ATTACHED TO THE CABINET USING ∅5/8" A325 MECHANICALLY GALVANIZED STRUCTURAL GRADE HARDWARE. FINAL REVIEW OF MOUNTING DETAIL IS THE RESPONSIBILITY OF THE CUSTOMER AND THE CUSTOMER'S ENGINEERS. THE VERTICAL SUPPORTS MUST BE ATTACHED AS SHOWN WITHIN THE MAXIMUM SPACING REQUIREMENTS. STAINLESS STEEL HARDWARE AVAILABLE PER CONTRACT REQUIREMENTS.

**DETAIL A**
**SCALE 1/4**

## VERTICAL SUPPORT SPACING TABLE

MOUNTING CALCULATIONS: SEE NOTE 10
IF THE VERTICAL SUPPORTS EXCEED THE STATED MAXIMUM SPACINGS THEN CONTACT DAKTRONICS ENGINEERING.

| | |
|---|---|
| MAX VERTICAL SPACING "A" | 6'-6" |
| MAX END SPACING "B" | 12" |
| MINIMUM # OF VERTICAL SUPPORTS REQUIRED | 4 |

**NOTES:**

1.) MATRIX SIZE 80 X 272
2.) SEE ILLUSTRATIONS FOR POWER AND SIGNAL CONDUIT ENTRANCES.
3.) ALL DIMENSIONS ARE IN FEET AND INCHES [mm].
4.) FULL PROTECTIVE MASKED FACE PANEL.
5.) MAINTENANCE OF DISPLAY IS INTERNAL VIA FRONT ACCESS FACE PANEL.
6.) ALL ALUMINUM CONSTRUCTION
7.) POSITIVE PRESSURE VENTILATION SYSTEM
8.) WEIGHT OF THE DISPLAY IS APPROXIMATELY 1410 LBS (640 KG).
9.) VERTICAL SUPPORTS DESIGNED AND SUPPLIED BY OTHERS.
10.) MOUNTING CALCULATIONS DONE TO "AASHTO LRFD SPECIFICATIONS FOR STRUCTURAL SUPPORTS FOR HIGHWAY SIGNS, LUMINAIRES, AND TRAFFIC SIGNALS, 1ST EDITION"

| REV | DATE: | | BY: | |
|---|---|---|---|---|
| 01 | 8 JAN 18 | UPDATED DRAWING NOTES | LMS | |

THE CONCEPTS EXPRESSED AND DETAILS SHOWN ON THIS DRAWING ARE CONFIDENTIAL AND PROPRIETARY. DO NOT REPRODUCE BY ANY MEANS WITHOUT THE EXPRESS WRITTEN CONSENT OF DAKTRONICS, INC. OR ITS WHOLLY OWNED SUBSIDIARIES.
COPYRIGHT 2017 DAKTRONICS, INC. (USA)

THIRD ANGLE PROJECTION

| | | | | |
|---|---|---|---|---|
| PROJECT: | VANGUARD | | | |
| TITLE: | SHOP DRAWING, VF-24**-80x272-20-*, 5/8" HW | | | |
| DATE: | 05-JAN-18 | DIM UNITS: INCHES [MILLIMETERS] | SHEET | REV |
| SCALE: | 1/30 | DO NOT SCALE DRAWING | 1 OF 1 | 01 |
| DESIGN: | DREITZ | JOB NO. / FUNC - TYPE - SIZE | | |
| DRAWN: | CKOLBEC | P2033 / F - 10 - B | 3584054 | |



TOP VIEW

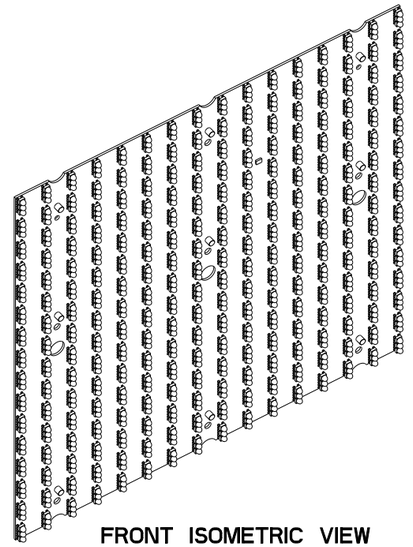

FRONT ISOMETRIC VIEW

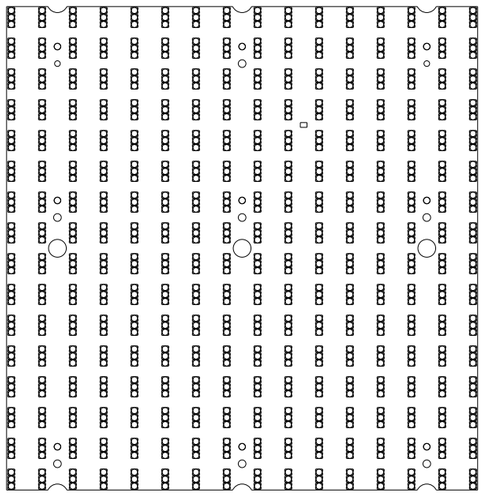

FRONT VIEW

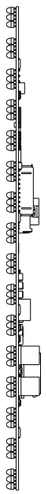

SIDE VIEW

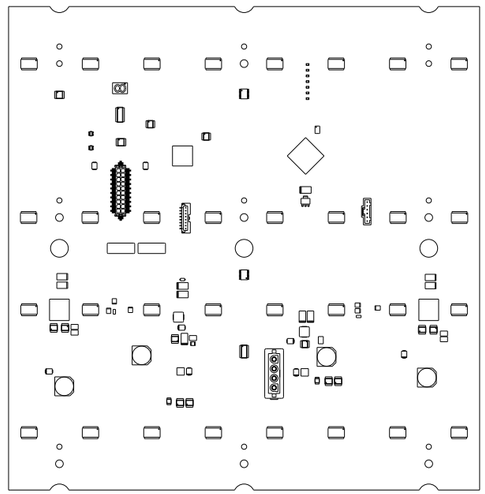

REAR VIEW

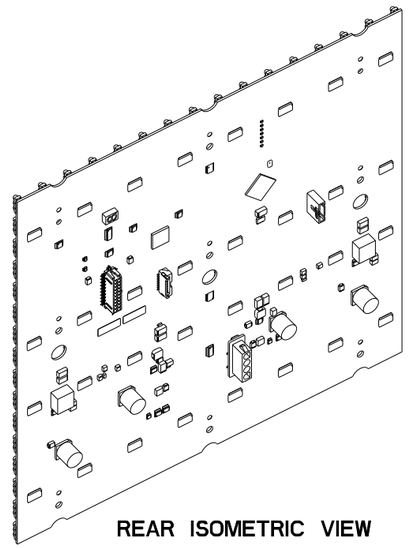

REAR ISOMETRIC VIEW

| REV | DATE: | | BY: |
|---|---|---|---|
| | | | |

DAKTRONICS, INC.
BROOKINGS, SD 57006

DO NOT SCALE DRAWING

THE CONCEPTS EXPRESSED AND DETAILS SHOWN ON THIS DRAWING ARE CONFIDENTIAL AND PROPRIETARY. DO NOT REPRODUCE BY ANY MEANS WITHOUT THE EXPRESSED WRITTEN CONSENT OF DAKTRONICS, INC. COPYRIGHT 2011 DAKTRONICS, INC.

PROJ: VANGUARD

TITLE: MODULE, VF-2***-16X16-20-RGB

| DESIGN: JSYRSTA | DRAWN: JSYRSTA | DATE: 16-AUG-12 |
|---|---|---|
| SCALE: 1=4 | | |

| SHEET: | REV | JOB NO: | FUNC-TYPE-SIZE | |
|---|---|---|---|---|
| 1 OF 1 | 00 | P1332 | F-10-B | 1110279 |

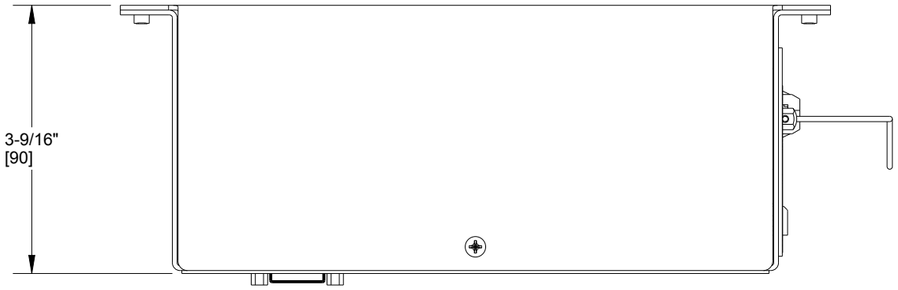


*TOP VIEW*

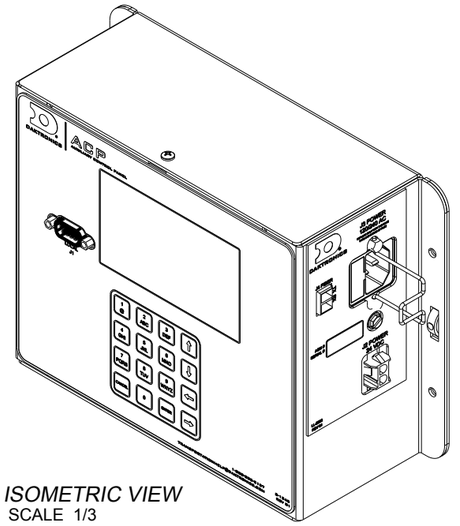

*FRONT ISOMETRIC VIEW*
SCALE 1/3

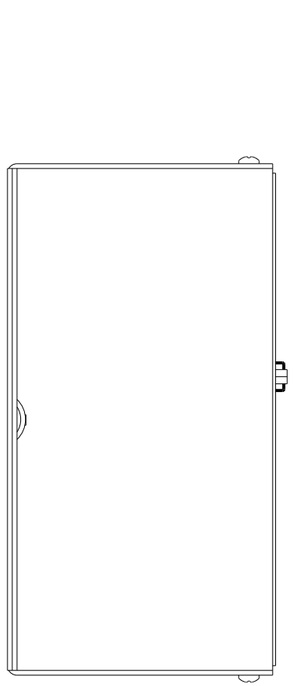

*LEFT SIDE VIEW*

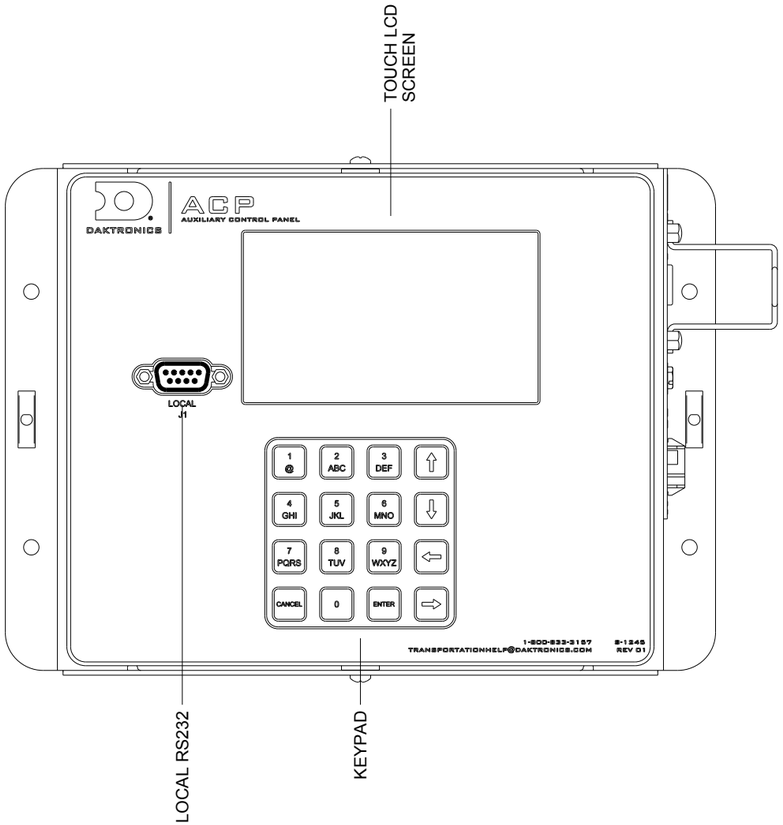


*FRONT VIEW*

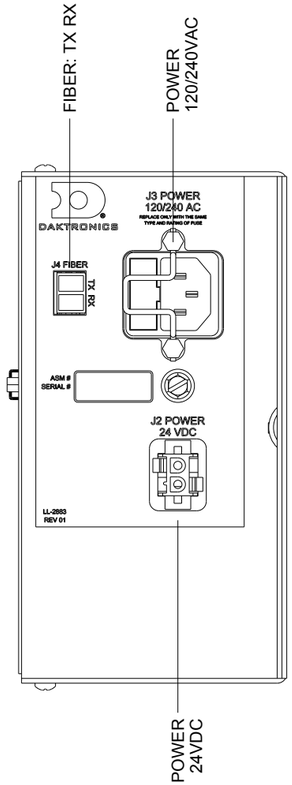


*RIGHT SIDE VIEW*

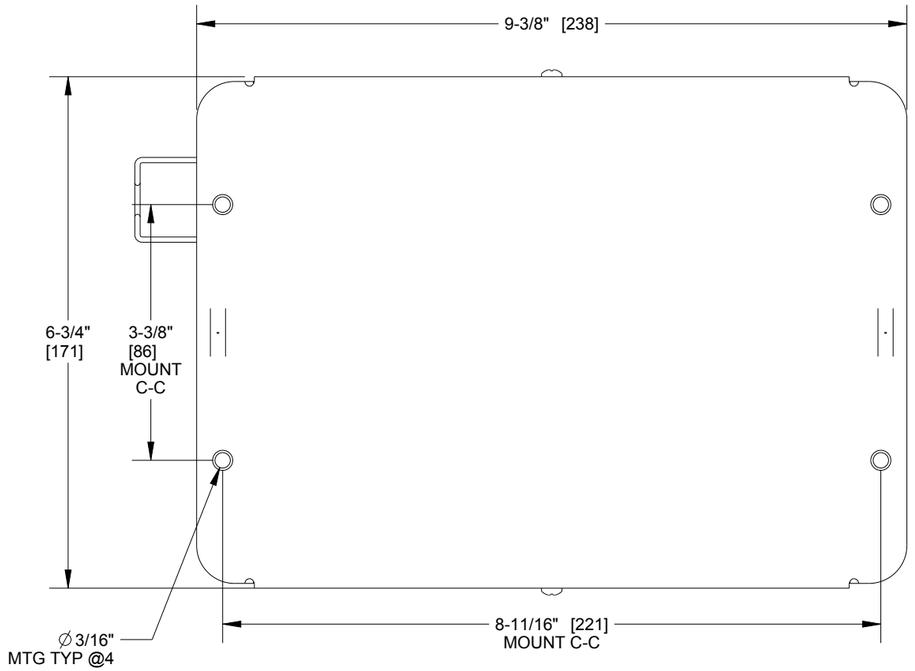


*REAR VIEW*

NOTES:
1. ALL DIMENSIONS SHOWN ARE IN INCHES [MILLIMETERS]
2. WEIGHT: 3.5 LBS [1.6 KG]
3. POWER: 120/240VAC OR 24VDC

| REV | DATE: | | BY: |
|---|---|---|---|
| 01 | 19 JAN 15 | UPDATED DRAWING LABELS | JPH |

DAKTRONICS, INC.
BROOKINGS, SD 57006
DO NOT SCALE DRAWING

THE CONCEPTS EXPRESSED AND DETAILS SHOWN ON THIS DRAWING ARE CONFIDENTIAL AND PROPRIETARY. DO NOT REPRODUCE BY ANY MEANS WITHOUT THE EXPRESS WRITTEN CONSENT OF DAKTRONICS, INC.
COPYRIGHT 2015 DAKTRONICS, INC.

PROJ: VANGUARD
TITLE: SHOP DRAWING, ACP: AUXILIARY CONTROL PANEL
DESIGN: DKLOSE | DRAWN: JHALIBU | DATE: 19-JAN-15
SCALE: 1/2

| SHEET: | REV | JOB NO: | FUNC-TYPE-SIZE | |
|---|---|---|---|---|
| 1 OF 1 | 01 | P 1248 | F – 10 – B | 1113023 |

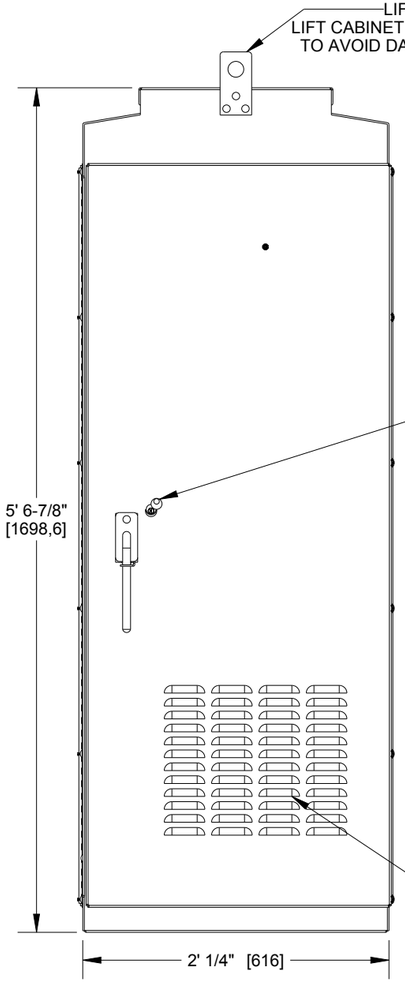


**FRONT VIEW**

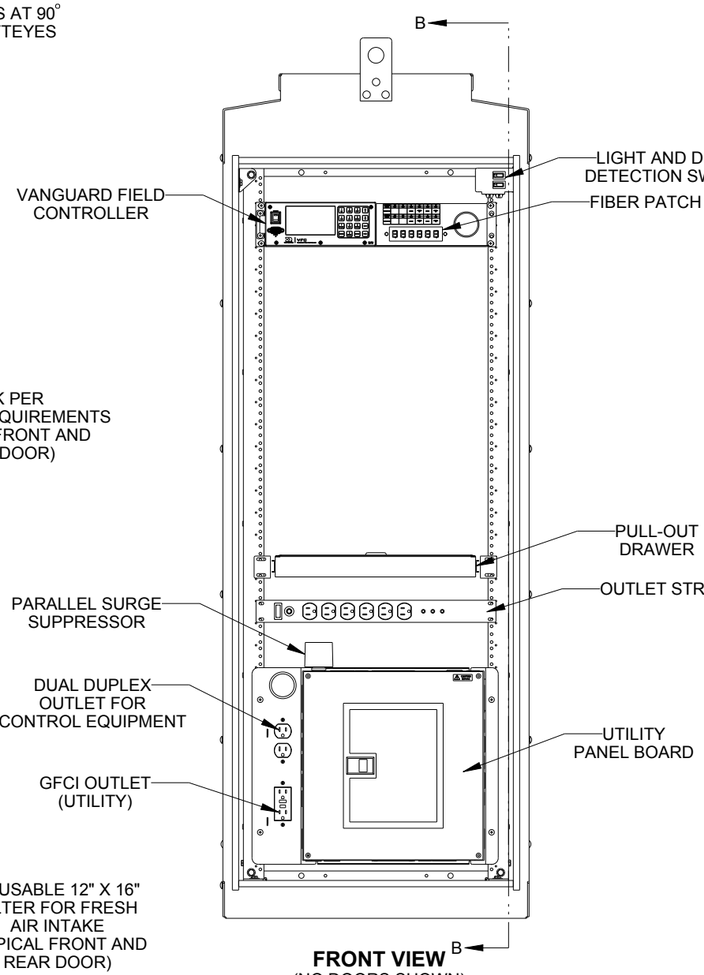


**FRONT VIEW**
(NO DOORS SHOWN)

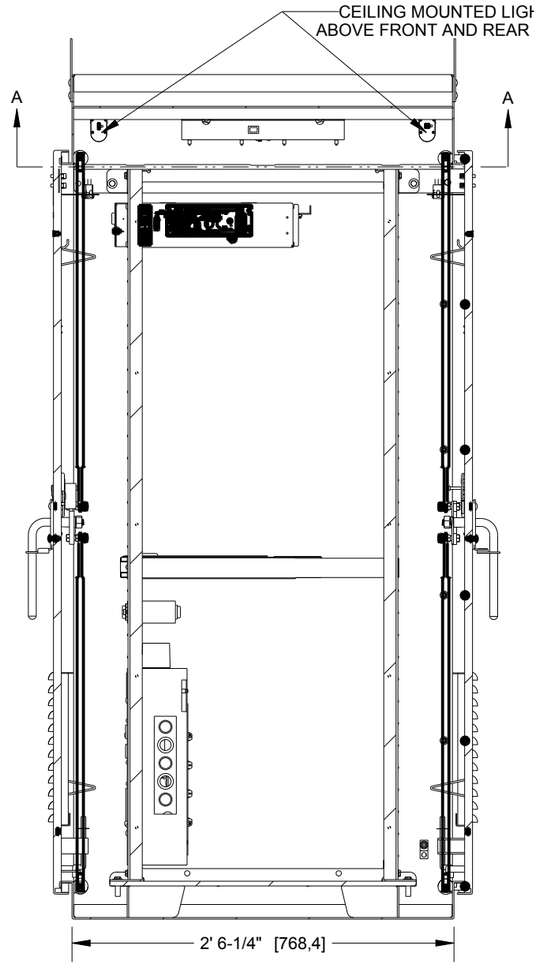


**SECTION B-B**

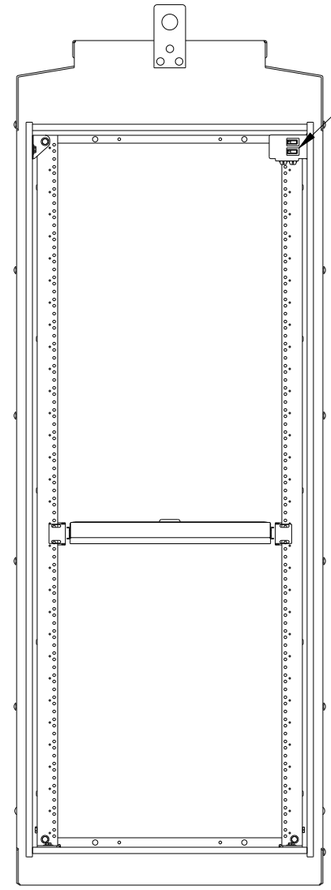


**REAR VIEW**
(NO DOORS SHOWN)

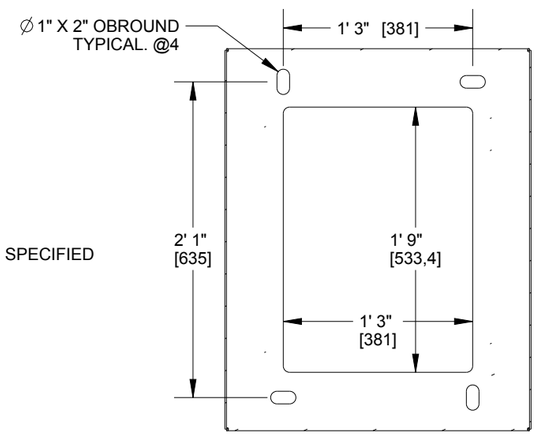


**BOTTOM VIEW**

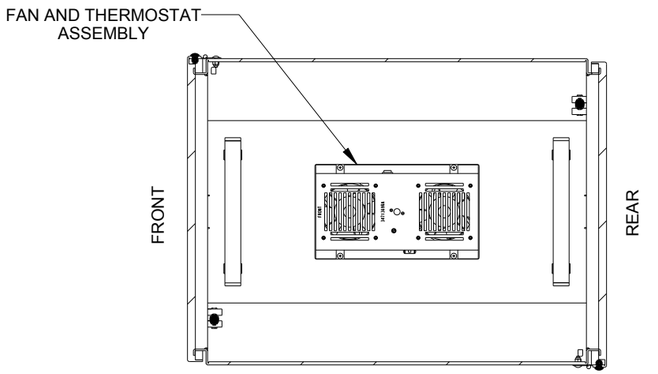


**SECTION VIEW**
SECTION A-A

## TRAFFIC CABINET NOTES:

1. CABINET SPECIFICATIONS:
   - -CABINET TYPE: 334 GROUND MOUNT
   - -ALL DIMENTIONS IN FEET & INCHES [MM], UNLESS OTHERWISE SPECIFIED
   - -0.125" MILL FINISH ALUMINUM 5052-H32 CONSTRUCTION WITH CONTINUOUSLY WELDED EXTERNAL SEAMS
   - -THREE POINT LATCH WITH SST HANDLE
   - -DOUBLE FLANGED DOOR SEAL WITH 1/2" X 2" CLOSED CELL NEOPRENE GASKET
   - -FULL LENGTH EIA GAGE FOR 19" EQUIPMENT
   - -NEMA 3R ENCLOSURE
   - -ALL STAINLESS STEEL HARDWARE WITH FULL LENGTH STAINLESS STEEL HINGE.
   - -DOOR OPENING: 56.750" X 21.750"
2. ALL MODIFICATIONS TO CABINET MUST MAINTAIN NEMA 3R RATING. IF UNSURE, CONTACT DAKTRONICS ENGINEERING FOR APPROVAL.
3. FINAL COMPONENT PLACEMENT MAY CHANGE SLIGHTLY DURING FINAL DESIGN.

| REV | DATE: | | BY: |
|---|---|---|---|

THE CONCEPTS EXPRESSED AND DETAILS SHOWN ON THIS DRAWING ARE CONFIDENTIAL AND PROPRIETARY. DO NOT REPRODUCE BY ANY MEANS WITHOUT THE EXPRESS WRITTEN CONSENT OF DAKTRONICS, INC. OR ITS WHOLLY OWNED SUBSIDIARIES. COPYRIGHT 2016 DAKTRONICS, INC. (USA)

DAKTRONICS

THIRD ANGLE PROJECTION

| | | | | |
|---|---|---|---|---|
| PROJECT: | VANGUARD | | | |
| TITLE: | SHOP DRAWING, TC, 334, ALU, GND, VFC | | | |
| DATE: 13-DEC-16 | DIM UNITS: INCHES [MILLIMETERS] | | SHEET | REV |
| SCALE: 1/12 | DO NOT SCALE DRAWING | | 1 OF 1 | 00 |
| DESIGN: CKOLBEC | JOB NO. | FUNC - TYPE - SIZE | 3433901 | |
| DRAWN: CKOLBEC | P1249 | F - 10 - B | | |

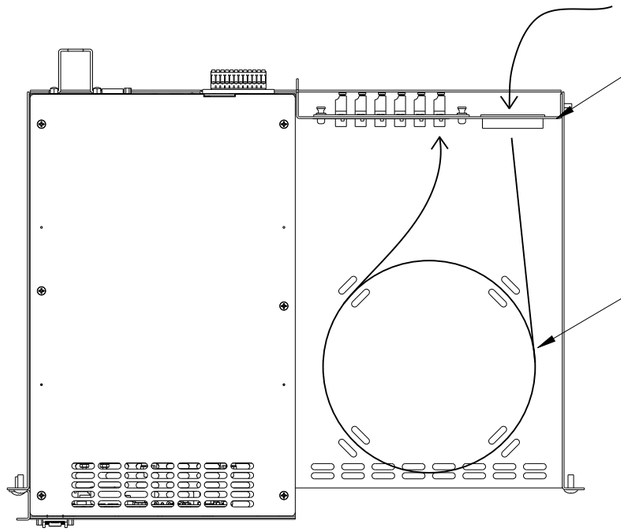


**TOP VIEW**
**1 - VFC IN 19" EIA SHELF**

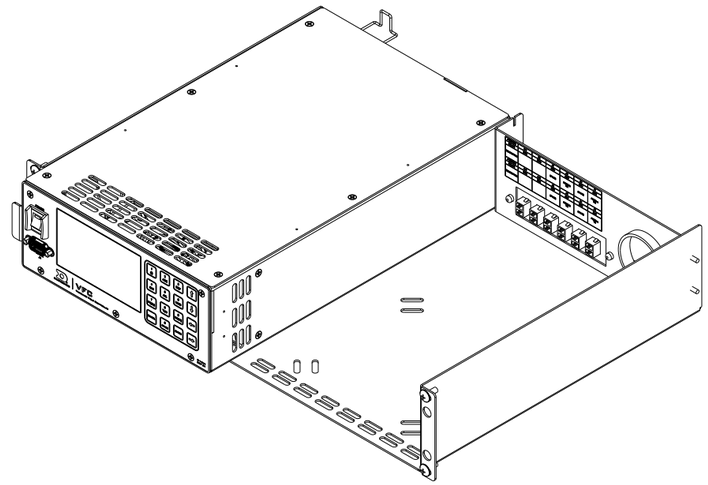

**FRONT ISOMETRIC VIEW**
**1 VFC'S PER SHELF**

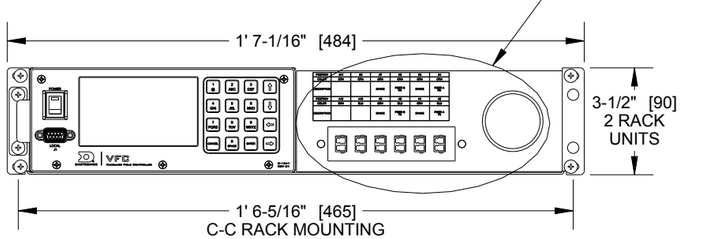


**FRONT VIEW**
**1 - VFC IN 19" EIA SHELF**




**RIGHT SIDE VIEW**

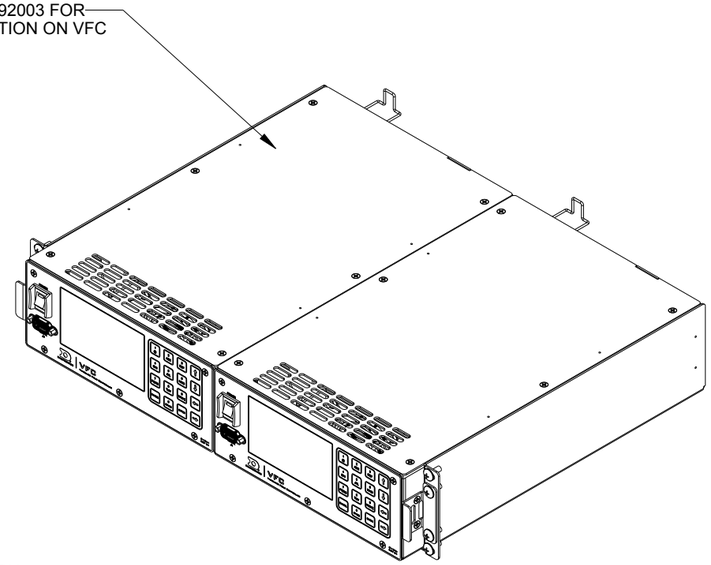


**FRONT ISOMETRIC VIEW**
**TWO VFC'S PER SHELF**

| POSITION | A11 | A9 | A7 | A5 | A3 | A1 |
|---|---|---|---|---|---|---|
| COLOR | GRN | ORN | GRN | ORN | GRN | ORN |
| DESCRIPTION | | | SPARE | FIBER B RX | SPARE | FIBER A RX |
| POSITION | A12 | A10 | A8 | A6 | A4 | A2 |
| COLOR | BRN | BLU | BRN | BLU | BRN | BLU |
| DESCRIPTION | | | SPARE | FIBER B TX | SPARE | FIBER A TX |

12 POSITION FIBER PATCH
PANEL - LC CONNECTORS

FIBER CABLE TO ROUTE THROUGH
BUSHING IN REAR PANEL

DETAIL A
SCALE 3/4

| REV | DATE: | | BY: |
|---|---|---|---|
| | | | |

DAKTRONICS, INC.
BROOKINGS, SD 57006
DO NOT SCALE DRAWING

THE CONCEPTS EXPRESSED AND DETAILS SHOWN ON THIS DRAWING ARE CONFIDENTIAL AND PROPRIETARY. DO NOT REPRODUCE BY ANY MEANS WITHOUT THE EXPRESS WRITTEN CONSENT OF DAKTRONICS, INC.
COPYRIGHT 2015 DAKTRONICS, INC.

PROJ: VANGUARD
TITLE: SHOP DRAWING, VFC, RACK MOUNT, FIBER PATCH PANEL
DESIGN: DKLOSE | DRAWN: DKLOSE | DATE: 11-MAY-15
SCALE: 1=5

| SHEET: | REV | JOB NO: | FUNC-TYPE-SIZE | |
|---|---|---|---|---|
| 1 OF 1 | 00 | P 1248 | F - 10 - B | 3055824 |

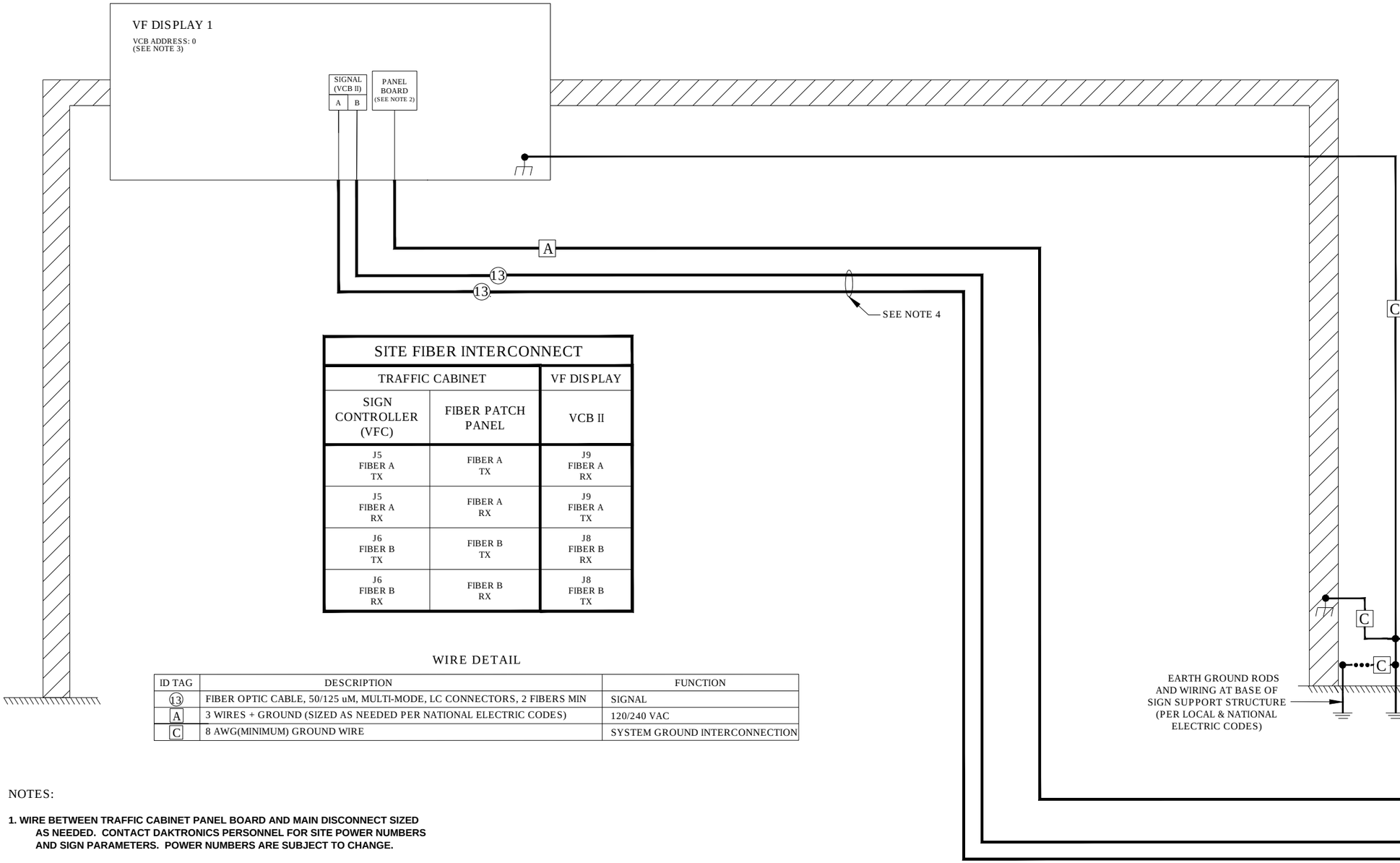





GENERAL NOTES:

IT IS THE RESPONSIBILITY OF THE ELECTRICAL INSTALLATION CONTRACTOR TO ENSURE THAT ALL ELECTRICAL WORK PERFORMED ON SITE MEETS OR EXCEEDS ALL LOCAL AND NATIONAL ELECTRICAL CODES.

## SITE FIBER INTERCONNECT

| TRAFFIC CABINET | | VF DISPLAY |
|---|---|---|
| SIGN CONTROLLER (VFC) | FIBER PATCH PANEL | VCB II |
| J5 FIBER A TX | FIBER A TX | J9 FIBER A RX |
| J5 FIBER A RX | FIBER A RX | J9 FIBER A TX |
| J6 FIBER B TX | FIBER B TX | J8 FIBER B RX |
| J6 FIBER B RX | FIBER B RX | J8 FIBER B TX |

## WIRE DETAIL

| ID TAG | DESCRIPTION | FUNCTION |
|---|---|---|
| 13 | FIBER OPTIC CABLE, 50/125 uM, MULTI-MODE, LC CONNECTORS, 2 FIBERS MIN | SIGNAL |
| A | 3 WIRES + GROUND (SIZED AS NEEDED PER NATIONAL ELECTRIC CODES) | 120/240 VAC |
| C | 8 AWG(MINIMUM) GROUND WIRE | SYSTEM GROUND INTERCONNECTION |

NOTES:

1. **WIRE BETWEEN TRAFFIC CABINET PANEL BOARD AND MAIN DISCONNECT SIZED AS NEEDED. CONTACT DAKTRONICS PERSONNEL FOR SITE POWER NUMBERS AND SIGN PARAMETERS. POWER NUMBERS ARE SUBJECT TO CHANGE.**

2. **DAKTRONICS SUPPLIED PANEL BOARDS IN THE TRAFFIC CABINET AND THE VF-2X20 (DMS) ACCEPTS 6 AWG TO 1 AWG WIRE.**

3. **SEE DISPLAY MANUAL FOR INSTRUCTIONS ON VCB ADDRESSING**

4. **FIBERS MAY BE CONTAINED IN A SINGLE CABLE. DAKTRONICS RECOMMENDS HAVING 1-2 TERMINATED SPARE FIBERS.**

| REV | DATE: | | BY: | |
|---|---|---|---|---|
| 02 | 18 APR 18 | UPDATED FIBER DESCRIPTION IN WIRE DETAIL AND FIBER ROUTING FROM TC TO DMS. ADDED SITEFIBER INTERCONNECT CHART. | WLT | |
| 01 | 27 NOV 17 | UPDATED TITLE. ADDED NOTE 4. | WLT | |

THE CONCEPTS EXPRESSED AND DETAILS SHOWN ON THIS DRAWING ARE CONFIDENTIAL AND PROPRIETARY. DO NOT REPRODUCE BY ANY MEANS WITHOUT THE EXPRESS WRITTEN CONSENT OF DAKTRONICS, INC. OR ITS WHOLLY OWNED SUBSIDIARIES. COPYRIGHT 2018 DAKTRONICS, INC. (USA)

THIRD ANGLE PROJECTION

| | | | | |
|---|---|---|---|---|
| PROJECT: | | | | |
| TITLE: | SITE RISER, 1 VF-2X20, VFC IN TC | | | |
| DATE: 17 JUL 17 | DIM UNITS: INCHES [MILLIMETERS] | | SHEET | REV |
| SCALE: NONE | DO NOT SCALE DRAWING | | | 02 |
| DESIGN: ASHANKS | JOB NO. | FUNC - TYPE - SIZE | 3686201 | |
| DRAWN: ASHANKS | P1993 | F - 10 - B | | |

# Appendix D: Test Procedures

The following submitted test procedures are an example of actual test methods performed in the field during the commissioning process. Daktronics understands each project may have specific needs and requirements therefore; test procedures may be amended following the final approval of the submittal documentation. Due to Daktronics' commitment to overall continuous improvement, processes and procedures may change without written notice or explanation.

1. **DD4105401**: Sample VF-2XXX Field Test Procedure

# Field Test Procedure

## Checklist

**For All Vanguard (NTCIP) Displays with VFC/DMP controllers**

**DD4105401** **Rev: 5— 16 April 2025**

DAKTRONICS

**Contract number:** _____

**Customer name:** _____

**Display Model(s):** _____

**Site Name:** _____

**117 Prince Drive PO Box 5120 Brookings SD 57006**

**tel: 800-833-3157**

DAKTRONICS

**DD4105401**
**Rev: 5 —16 April 2025**

# DAKTRONICS,INC.


## Copyright 2018

All rights reserved. While every precaution has been taken in the preparation of this manual, the publisher assumes no responsibility for errors or omissions. No part of this book covered by the copyrights hereon may be reproduced or copied in any form or by any means—graphic, electronic, or mechanical, including photocopying, taping, or information storage and retrieval systems—without written permission of the publisher.

*Vanguard® is a trademark of Daktronics, Inc. National Electrical Code® and all other trademarks are property of their respective companies*

## Introduction:

This checklist documents the field tests for a LED dynamic message sign site for this project. The purpose of this document is to record that all testing has been completed.

**For instructions on howto complete each test reference Field Test Procedure Instructions document:**
**DD4105386-FTP Test instruction for all Vanguard Displays**

1- Ensure that you completely fill out the site information page on this checklist.
2- Use the instruction document to correctly complete eachtest and document results of each test in the correspondingtest.
3- This test should be performed for every sign site at the completion of installation of the particular site.
4- The test messages to be used should be the test messageslisted or messages suchas "Testing; Message1" or "Testing in Progress", that will not misdirect traffic.

**Test equipment required:**

- Boom truck, or whatever is required to get up into the sign
- Digital multi-meter
- Laptop computer, with vanguard software
- Ethernet Cable
- Common hand tools
- Flash Drive/Memory Stick

# Site Information:

Representative completing the testing: __ _____

Display assembly #(s):_____

Display serial #(s):__ _____

Controller serial #:_ _____

Controller assembly and Rev#:_____

If Daktronics furnished:

Traffic cabinet assembly #: __ _____

Traffic cabinet serial #:_ _____

## Display/Cabinet Inspections

☐ 1. Complete visual inspection of control cabinet and/or display(s) for damage on transport or installation, and verify all equipment mounted properly.

☐ 2. Check that control cabinet and/or display(s) earth grounding is connected properly per the system site riser.

☐ 3. Perform display and/or control cabinet power incoming power verification test
TP1:_____(AC Line to Neutral or DC Termination point in display)
TP2:_____(AC Neutral to Ground or DC last module in display)

☐ 4. Complete cabinet and/or display outlet, ventilation, and, access points checks.

☐ 5. Complete controller setup.
i). Access KB articles to complete controller setup: How to configure a VFC Controller https://www.daktronics.com/en-us/support/kb/000001766
ii). Access Contract documents to verify controller configuration. Site configs and Backups dakfiles.daktronics.com - /downloads/Transportation/Contract Documents/SiteConfigs and Backups/

☐ 6. Complete controller Firmware updates.
i). Access KB articles to complete controller Firmware updates: How to update firmware on a VFC controller https://www.daktronics.com/en-us/support/kb/000001252

DMP Firmware Version: _____
VIP Firmware Version: _____
Display Interface Firmware Version: _____

**Important: Make sure that the firmware listed below is the most current version, if not make sure to download the latest version of the firmware from http://dakfiles.daktronics.com/downloads/Transportation/Firmware/.**

☐ 7. Perform Test Pattern testing.
☐ 8. Complete display signal and/or pixel testing.
☐ 9. Verify all Peripherals are reporting and working correctly:
Date:_____Time:_____Sky Conditions:_____Dimming level_____

i) Document all light sensor include name and value (ex. Light Line 1= 853).

_____
_____
_____
_____

ii) Document all temp and humidity readings (ex. controller temp = 80F).

_____
_____
_____
_____

☐ 10.Run test message following NTCIP test message procedure.
☐ 11. Record site information.
☐ 12. Complete Quality feedback form
☐ 13. Reinstall all enclosure covers and close all doors

It is acknowledged that the following field test procedure has been completed for this site and the display is operational.

**Technician commissioning**

| _____ | _____ | _____ |
|---|---|---|
| Printed Name | Signature | Date |

**Customer**

| _____ | _____ | _____ |
|---|---|---|
| Printed Name | Signature | Date |

DAKTRONICS PERSONNEL MUST RETURN THIS COMPLETED DOCUMENT AND QUALITY FEED BACK FORM TO THE DAKTRONICS PROJECT MANAGER.

## Transportation Quality Feedback form

*For Internal Daktronics use only. This is not part of the field Test Procedure. This form needs field out and sent back to Daktronics with the Field Test Procedures*

Submitted By_______ Contract#_____

Display Type (i.e. VF2400_27x105-66-A) _____

Location of Display_____

Display Serial #_____ nearest City and State _____

Commissioning Date_____ Project Manager_____

Did you experience any issues or unplanned work during the commission of this display? **Yes/No** (if no skip to additional comments/Punch list items)

| Failed Part Description | Part Number | Part Serial # |
|---|---|---|
| | | |
| | | |
| | | |
| | | |
| | | |

**Describe the issues and or unplanned work**

_____

_____

_____

_____

_____

_____

_____

**Additional Comments/Punchlist Items**

_____

_____

_____

_____

_____

_____

_____

FTP completed **Yes/No** ☐

Site Complete **Yes/No** (if no documents punchlist items above) ☐