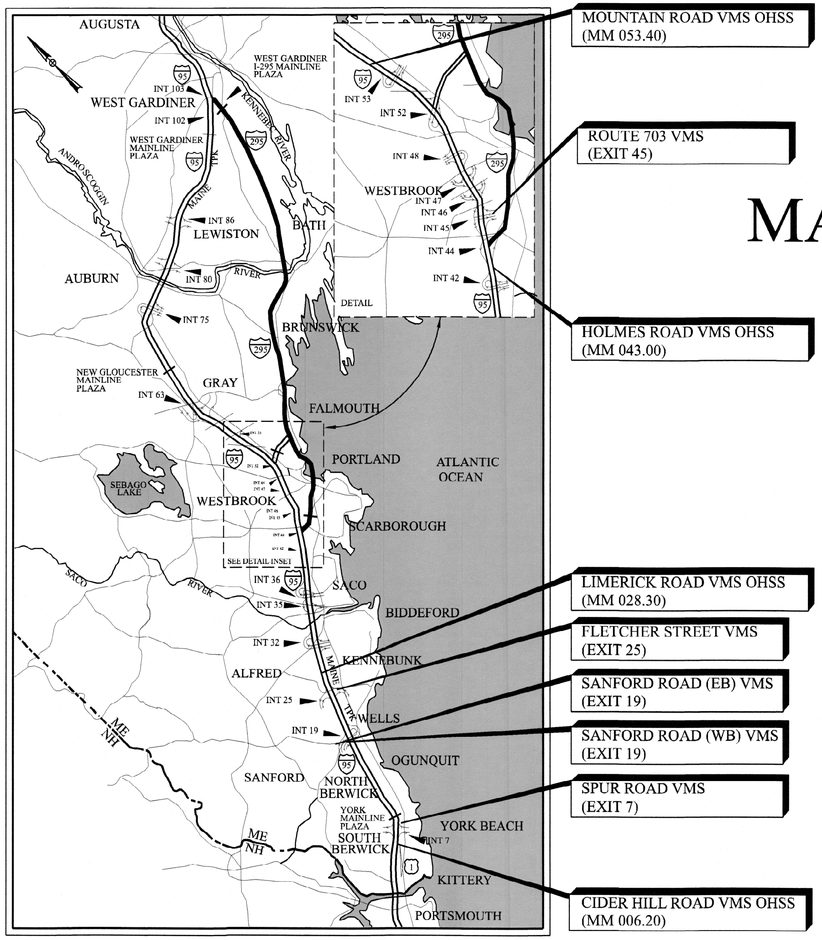

LOCATION MAP

MAINE TURNPIKE

THE GOLD STAR MEMORIAL HIGHWAY

MAINE TURNPIKE AUTHORITY

MICHAEL J. CIANCHETTE, CHAIR
JANE L. LINCOLN, VICE CHAIR
BILL BENSON, MEMBER
EMILY N. BECKER, MEMBER
NINA A. FISHER, MEMBER
THOMAS J. ZUKE, MEMBER
DALE F. DOUGHTY, MAINEDOT EX-OFFICIO

ANDRE J. BRIERE, COLONEL, USAF (RET.), EXECUTIVE DIRECTOR

CONTRACT 2026.23

VARIABLE MESSAGE SIGN REPLACEMENT – VARIOUS LOCATIONS (MM 6.20 TO MM 53.40)

INDEX OF SHEETS

Sheet No.	Description
1	Title Sheet
2	General Notes
3	Estimated Quantities
4-5	Maintenance of Traffic Details
6-14	Site Plans
15-18	Highway Details
19-29	Sign Structure Plans
30-31	Median Barrier
32-36	Wiring Diagram
37-38	Lighting Protection

Stephen R. Tartre
STEPHEN R. TARTRE, P.E.
DIRECTOR OF ENGINEERING

11/19/26
DATE

HNTB

STATE OF MAINE
TIMOTHY R. COTE
No. 10671
LICENSED PROFESSIONAL ENGINEER

TIMOTHY R. COTE, P.E.
VICE PRESIDENT | PROJECT DIRECTOR

11/20/2026
DATE

Contract 2026.23

GENERAL NOTES:

1. ALL WORK SHALL BE IN CONFORMANCE WITH PROJECT SPECIFIC SPECIAL PROVISIONS, MAINE TURNPIKE 2016 SUPPLEMENTAL SPECIFICATIONS, MAINE DEPARTMENT OF TRANSPORTATION (MAINEDOT) STANDARD SPECIFICATIONS 2014 AND STANDARD DETAILS 2020 WITH UPDATES AND MAINEDOT BEST MANAGEMENT PRACTICES FOR EROSION AND SEDIMENT CONTROL, LATEST REVISION, UNLESS OTHERWISE INCLUDED IN THESE PLANS.

2. CONTRACTOR IS REQUIRED TO MAINTAIN ACCESS TO ALL RAMPS DURING CONSTRUCTION UNLESS OTHERWISE SHOWN ON THE PLANS. CONTRACTOR SHALL SUBMIT PROPOSED STAGING AREA(S) TO THE RESIDENT FOR APPROVAL PRIOR TO STARTING WORK.

3. DUST CONTROL IS INCIDENTAL TO CONTRACT.

4. WASTE MATERIALS SHALL BE DISPOSED OF OFF THE PROJECT SITE, IN ACCORDANCE WITH CHAPTER 404, DEPARTMENT OF ENVIRONMENTAL PROTECTION SOLID WASTE MANAGEMENT RULES.

5. EXCAVATIONS ACCOMPLISHED AS PART OF THIS PROJECT SHALL BE CONSTRUCTED IN ACCORDANCE WITH OSHA SUBPART P OF 29 CFR PART 1926.650-652 (CONSTRUCTION STANDARDS FOR EXCAVATION).

6. ALL EXCAVATION AND RESTORATION IS INCIDENTAL TO THE 645 PAY ITEMS.

7. CONTRACTOR SHALL VERIFY ALL SITE INFORMATION PRIOR TO COMMENCING ANY WORK. ALL EXISTING SIGN STRUCTURE DIMENSIONS SHALL BE VERIFIED IN THE FIELD BY THE CONTRACTOR. FABRICATION SHALL NOT OCCUR UNTIL ALL DIMENSIONS ARE FIELD VERIFIED, SHOWN ON THE APPROPRIATE SHOP DRAWING SUBMITTAL, AND SUBMITTED TO THE RESIDENT.

8. ALL DISTURBED AREAS SHALL BE LOAMED AND SEEDED. ACTUAL PLACEMENT OF THE LOAM USED SHALL BE AS DESIGNATED BY THE RESIDENT. LOAM, SEEDING, AND EROSION CONTROL BLANKET SHALL BE INCIDENTAL TO RELATED 645 PAY ITEMS.

9. UNLESS OTHERWISE NOTED, SEEDING METHOD NO. 1 SHALL BE UTILIZED ON ALL LAWNS AND DEVELOPED AREAS; SEEDING METHOD NO. 2 SHALL BE UTILIZED ON ALL NON-GUARDRAIL FORE SLOPES FROM THE EDGE OF SHOULDER TO THE DITCH LINE OR TOE OF FILL; SEEDING METHOD NO.3 SHALL BE UTILIZED ON ALL BACKSLOPES AND GUARDRAIL FILL SLOPES.

10. MULCH SHALL BE APPLIED IN ALL AREAS SEEDED, MULCH SHALL BE INCIDENTAL TO 645 PAY ITEMS.

11. ANY DAMAGE TO THE EXISTING ROADS, SLOPES OR PIPES CAUSED BY THE CONTRACTOR'S EQUIPMENT, PERSONNEL OR OPERATION SHALL BE REPAIRED TO THE SATISFACTION OF THE RESIDENT AT THE CONTRACTOR'S EXPENSE.

12. TEMPORARY EROSION CONTROL MEASURES SHALL BE MAINTAINED IN ACCORDANCE WITH MAINE TURNPIKE AND MAINEDEP STANDARDS.

13. SEE SPECIAL DETAILS FOR VARIABLE MESSAGE SIGN VERTICAL TILT, HORIZONTAL SKEW AND HEIGHT REQUIREMENTS.

14. ALL UTILITY SPLICES WILL BE MADE IN THE CABINETS OR JUNCTION BOXES.

15. JUNCTION BOXES SHALL BE INSTALLED PER THE PLANS AND SPECIFICATIONS AND AS DIRECTED BY THE RESIDENT.

16. ALL WORK MUST BE COMPLETED WITHIN THE MAINE TURNPIKE AUTHORITY RIGHT OF WAY UNLESS OTHERWISE NOTED.

17. THE CONTRACTOR IS REQUIRED TO HAVE AN APPROVED CRASH WORTHY END TREATMENT ON ALL GUARDRAIL ENDS IN ALL WORK AREAS AT THE END OF EACH DAY. THE CONTRACTOR SHALL ENSURE THAT ENOUGH TIME EXISTS IN THE WORK DAY TO COMPLETE ALL MODIFICATION AND/OR INSTALLATIONS TO END TERMINALS. THE CONTRACTOR SHALL ENSURE THAT ALL PARTS AND MANPOWER ARE ON-SITE PRIOR TO UNDERTAKING ANY GUARDRAIL MODIFICATIONS.

SIGN STRUCTURE GENERAL NOTES:

SPECIFICATIONS

DESIGN
AASHTO LRFD BRIDGE DESIGN SPECIFICATIONS, 10th EDITION

AASHTO LRFD SPECIFICATIONS FOR STRUCTURAL SUPPORTS FOR HIGHWAY SIGNS, LUMINAIRES, AND TRAFFIC SIGNALS, 1st EDITION (2015) WITH INTERIM REVISIONS THROUGH 2025

AISC MANUAL OF STEEL CONSTRUCTION, LRFD METHOD, 16th EDITION (2023)

ASCE 7-22 MINIMUM DESIGN LOADS AND ASSOCIATED CRITERIA FOR BUILDINGS AND OTHER STRUCTURES (2022)

CONSTRUCTION
STATE OF MAINE, DEPARTMENT OF TRANSPORTATION STANDARD SPECIFICATIONS, HIGHWAYS AND BRIDGES, MARCH 2014 EDITION

STATE OF MAINE, DEPARTMENT OF TRANSPORTATION STANDARD DETAILS FOR HIGHWAYS AND BRIDGES, MARCH 2020 EDITION WITH UPDATES

MTA SUPPLEMENTAL SPECIFICATIONS, 2016 EDITION

DESIGN LOADING

WIND
BASIC WIND SPEED (V) = 110 MPH

ICE
NOMINAL ICE THICKNESS (t) = 1.0 INCH

MATERIALS

CONCRETE
ALL STRUCTURAL CONCRETE - CLASS AAA

REINFORCING STEEL
AASHTO M31, GRADE 60, EPOXY COATED

ANCHOR BOLTS
RODS - ASTM F1554, GRADE 105
WASHERS - ASTM F436
NUTS - ASTM A563, GR DH OR A194, GR 2H

STRUCTURAL STEEL
STRUCTURAL STEEL TUBING (ROUND HSS) SHALL CONFORM TO ASTM A500, GRADE B

STRUCTURAL STEEL W-SHAPES SHALL CONFORM TO ASTM A992

STEEL PIPES SHALL CONFORM TO ASTM A53, GRADE B

ALL OTHER STRUCTURAL STEEL SHALL CONFORM TO ASTM A709, GRADE 50

INTERIOR AND EXTERIOR OF ALL SUPPORT STRUCTURE COMPONENTS SHALL BE HOT-DIP GALVANIZED IN CONFORMANCE WITH AASHTO M111

U-BOLTS FOR STEEL SUPPORT STRUCTURES SHALL CONFORM TO ASTM A449

ALL BOLTS SHALL CONFORM TO ASTM F3125 GRADE A325

ALL HARDWARE SHALL BE HOT-DIP GALVANIZED IN CONFORMANCE WITH AASHTO M232 PER MAINEDOT STANDARD SPEC 719.072

BASIC DESIGN STRESSES

CONCRETE
CLASS AAA - f'_c = 4,500 PSI

REINFORCING STEEL
f_y = 60,000 PSI

ANCHOR RODS
ASTM F1554, GRADE 105 - f_y = 105,000 PSI

STRUCTURAL STEEL
ASTM A500, GRADE B - f_y = 42,000 PSI

ASTM A992 - f_y = 50,000 PSI

ASTM A53, GRADE B - f_y = 35,000 PSI

ASTM A709, GRADE 50 - f_y = 50,000 PSI

ASTM F3125 GRADE A325 - f_v = 120,000 PSI

UTILITY NOTES:

1. THE CONTRACTOR IS REQUIRED TO CALL DIG SAFE AT 1-888-344-7233 AT LEAST 72 HOURS PRIOR TO THE START OF WORK. ALL PROPOSED SIGN AND EXCAVATION LOCATIONS SHALL BE MARKED AT THE NOTIFICATION TIME. THE RESIDENT ENGINEER SHALL BE PROVIDED AN ELECTRONIC COPY OF ALL DIG SAFE TICKETS WITHIN 24 HOURS OF THEIR RELEASE FOR PROJECT NOTIFICATIONS AND 3RD PARTY UTILITY LOCATOR COORDINATION.

2. THE CONTRACTOR SHALL NOTIFY ALL NON-MEMBERS THROUGH WWW.OKTODIG.COM OR AS OTHERWISE REQUIRED BY THE MAINE PUBLIC UTILITIES COMMISSION. ALL PROPOSED SIGN AND EXCAVATION LOCATIONS SHALL BE MARKED AT THE NOTIFICATION TIME. THE RESIDENT ENGINEER SHALL BE PROVIDED AN ELECTRONIC COPY OF ALL NON-MEMBER NOTIFICATIONS WITHIN 24 HOURS OF THEIR RELEASE.

3. THE CONTRACTOR SHALL NOTIFY THE RESIDENT ENGINEER 10 CALENDAR DAYS PRIOR TO SUBMITTING ANY UTILITY LOCATE REQUESTS AS NOTED ABOVE SO THAT THE RESIDENT CAN ARRANGE FOR MAINE TURNPIKE UNDERGROUND UTILITY LOCATION. ALL PROPOSED SIGN AND EXCAVATION LOCATIONS SHALL BE MARKED AT THE NOTIFICATION TIME. NO EXCAVATION SHALL BE PERMITTED UNTIL THE AUTHORITY HAS LOCATED AND MARKED ITS UNDERGROUND UTILITIES.

4. FOLLOWING THE COMPLETION OF THE INITIAL UTILITY LOCATE THE CONTRACTOR WILL GPS LOCATE ALL UTILITIES WITHIN THE PROJECT LIMITS AND PROVIDE A COPY OF THE DIG SAFE RECORDS TO THE AUTHORITY. THE CONTRACTOR, ACTING AS THE AUTHORITY'S THIRD-PARTY LOCATOR, SHALL BE RESPONSIBLE FOR REMARKING ALL MAINE TURNPIKE FACILITIES WHEN A DIG SAFE UTILITY IS CALLED FOR THE PROJECT. THIS WORK SHALL BE CONSIDERED INCIDENTAL TO THE CONTRACT.

5. THE CONTRACTOR SHALL COORDINATE WITH MTA, THROUGH THE RESIDENT, FOR ELECTRICAL SERVICE AND COMMUNICATIONS FOR VMS.

6. ABOVE GROUND CONDUIT SHALL BE GALVANIZED RIGID METAL AND UNDERGROUND CONDUIT SHALL BE SCHEDULE 80 PVC.

SIGN STRUCTURE CONSTRUCTION NOTES:

1. ALL REINFORCING STEEL SHALL HAVE 2" COVER UNLESS NOTED OTHERWISE.

2. ALL ANCHOR RODS SHALL BE SWEDGED OR THREADED ON THE EMBEDDED PORTION OF THE ROD.

3. CHAMFER ALL EXPOSED EDGES OF CONCRETE 3/4" UNLESS NOTED OTHERWISE.

4. ALL EXPOSED CONCRETE SURFACES SHALL RECEIVE A CLEAR PROTECTIVE COATING IN ACCORDANCE WITH SPECIAL PROVISION 515. PAYMENT SHALL BE CONSIDERED INCIDENTAL TO THE CONTRACT.

5. CONTRACTOR DESIGNED SIGN STRUCTURE SHALL CONFORM TO THE REQUIREMENTS OF SPECIAL PROVISION 645.

6. CONTRACTOR SHALL SUBMIT SIGN STRUCTURE, SIGN BRACKET AND WALKWAY FABRICATION DETAILS TO MTA FOR REVIEW AND ACCEPTANCE PRIOR TO FABRICATION.

7. WALKWAY GRATING SHALL HAVE A SERRATED SURFACE.

EXISTING VMS SIGN AND CONTROLLER CABINET REMOVAL NOTES:

1. REMOVE ALL EXISTING VMS CONTROLLER CABINETS AND DELIVER THEM TO THE CROSBY MAINTENANCE YARD AT MILE MARKER 45.8. CABINET CONTENTS SHALL BECOME THE PROPERTY OF THE CONTRACTOR AND SHALL BE REMOVED BEFORE DELIVERY. EXISTING SHELVING IN CABINET SHALL REMAIN. COORDINATE THE DELIVERY DATE AND TIME WITH THE RESIDENT. THE CONTRACTOR SHALL BE RESPONSIBLE FOR UNLOADING THE CABINETS AT THE CROSBY MAINTENANCE YARD AT MILE MARKER 45.8.

2. ALL EXISTING DAKTRONICS MODEL 7X105-18LOC-3 OVERHEAD VMS SIGNS SHALL BECOME THE PROPERTY OF THE CONTRACTOR UPON REMOVAL.

3. ALL EXISTING SIDE-MOUNTED DAKTRONICS VMS SIGNS SHALL BECOME THE PROPERTY OF THE CONTRACTOR UPON REMOVAL, SUBJECT TO MTA'S SALVAGE RIGHTS DESCRIBED HEREIN. MAKE ONE REMOVED SIGN AVAILABLE TO MTA PERSONNEL FOR SALVAGE OF DESIRED COMPONENTS. PLACE THE SIGN IN A SAFE, ACCESSIBLE LOCATION AND SECURELY BRACE IT TO PREVENT TIPPING. PROVIDE THE RESIDENT AND MTA DIRECTOR OF ITS AT LEAST ONE WEEK'S NOTICE BEFORE SIGN REMOVAL AND ALLOW MTA PERSONNEL AT LEAST ONE WEEK OF ACCESS FOLLOWING REMOVAL. REMOVE THE SIGN FROM THE SITE AFTER RECEIVING AUTHORIZATION FROM THE RESIDENT.

4. THERE ARE VARIOUS SPARE SIGN COMPONENTS CURRENTLY LOCATED AT THE GRAY NORTHBOUND TOLL THAT SHALL BECOME PROPERTY OF THE CONTRACTOR AS PART OF THIS PROJECT. REFERENCE SPECIAL PROVISION 202 AND REMOVAL WILL BE PAID FOR UNDER ITEM 202.071.

Username: EHANDLEY Date: 11/19/2026

Scale:

No.	Revision	By	Date

Designed by: HNTB

CONSULTANT PROJECT MANAGER: Daniel Bouchard, P.E.

	By	Date		By	Date
Designed	GLS	11/2026	Checked	BRG	11/2026
Drawn	ERB	11/2026	In Charge of	TRC	11/2026

HNTB CORPORATION
82 Running Hill Road, Suite 201
South Portland, ME 04106

TEL (207) 774-5155
FAX (207) 228-0909

MAINE TURNPIKE

THE GOLD STAR MEMORIAL HIGHWAY

MTA PROJECT MANAGER: Eric Barnes, P.E.

VARIABLE MESSAGE SIGN REPLACEMENT – VARIOUS LOCATIONS

GENERAL NOTES

SHEET NUMBER: GN-01

CONTRACT: 2026.23

Filename: General Notes.dgn

ESTIMATED QUANTITIES			
ITEM NO.	DESCRIPTION	QUANTITY	UNIT
202.071	REMOVAL OF EXISTING SPARE SIGN PARTS	1	LS
510.131	ACCESS WAY - CIDER HILL ROAD - MM 6.20	1	LS
510.132	ACCESS WAY - LIMERICK ROAD - MM 28.3	1	LS
510.133	ACCESS WAY - HOLMES ROAD - MM 43.0	1	LS
526.353	MEDIAN BARRIER - TYPE C (20 LF)	1	LS
527.341	WORK ZONE CRASH CUSHIONS - TL-3	2	UNIT
527.343	RESETTING EXISTING WORK ZONE CRASH CUSHION	2	UNIT
603.179	18 INCH CULVERT PIPE OPTION III	30	LF
603.219	36 INCH CULVERT PIPE OPTION III	32	LF
606.356	UNDERDRAIN DELINEATOR POST	25	EA
606.3605	GUARDRAIL - REMOVE, MODIFY AND RESET SINGLE RAIL	600	LF
606.3606	GUARDRAIL - REMOVE, MODIFY AND RESET DOUBLE RAIL	300	LF
606.3607	GUARDRAIL - REMOVE, MODIFY AND RESET THRIE BEAM	100	LF
606.471	SINGLE OFFSET BLOCK - W-BEAM	5	EA
606.48	SINGLE GALVANIZED STEEL POST	5	EA
610.18	STONE DITCH PROTECTION	28	CY
626.121	QUAZITE JUNCTION BOX (36X24)	17	EA
626.122	QUAZITE JUNCTION BOX (18X11)	3	EA
626.21	METALLIC CONDUIT	200	LF
626.22	NON-METALLIC CONDUIT	4000	LF
626.223	HORIZONTAL DIRECTIONAL DRILLED CONDUIT	225	LF
626.332	30-INCH DIAMETER, GREATER THAN 8-FEET LONG, AND ALL 36-INCH AND 42-INCH DIAMETER FOUNDATIONS	70	CY
626.36	REMOVE OR MODIFY CONCRETE FOUNDATION	7	EA
626.38	GROUND MOUNTED CABINET FOUNDATION	9	EA
629.05	HAND LABOR, STRAIGHT TIME	10	HR
631.10	AIR COMPRESSOR (INCLUDING OPERATOR)	10	HR
631.11	AIR TOOL (INCLUDING OPERATOR)	10	HR
631.12	ALL PURPOSE EXCAVATOR (INCLUDING OPERATOR)	10	HR
631.13	BULLDOZER (INCLUDING OPERATOR)	10	HR
631.15	ROLLER, EARTH AND BASE (INCLUDING OPERATOR)	10	HR
631.171	TRUCK - SMALL (INCLUDING OPERATOR)	10	HR
631.172	TRUCK - LARGE (INCLUDING OPERATOR)	10	HR
631.36	FOREMAN	10	HR
631.51	BUCKET TRUCK	10	HR
631.53	ELECTRICIAN	20	HR
631.54	ELECTRICIAN'S APPRENTICE	20	HR
639.19	FIELD OFFICE TYPE B	1	EA
643.92	PEDESTAL POLE	7	EA
643.931	REMOVE AND REPLACE WOOD POLE	1	EA
645.1241	REPLACE OVERHEAD SIGN STRUCTURE AND WALKWAY AND INSTALL VMS CIDER HILL ROAD - MM 6.20	1	LS
645.1242	REPLACE LIMERICK ROAD VMS AND INSTALL WALKWAY - MM 28.30	1	LS
645.1243	REPLACE OVERHEAD SIGN STRUCTURE AND WALKWAY AND INSTALL VMS HOLMES ROAD - MM 43.00	1	LS
645.1244	REMOVAL, DISASSEMBLY AND RELOCATION OF OVERHEAD SIGN STRUCTURE AND INSTALL VMS AND WALKWAY MOUNTAIN ROAD - MM 53.40	1	LS
645.1245	REPLACE VMS AT EXISTING SIDE MOUNT BUTTERFLY STRUCTURES	5	EA
652.361	MAINTENANCE OF TRAFFIC CONTROL DEVICES	1	LS
655.801	LIGHTNING SUPPRESSION SYSTEM - CIDER HILL ROAD MM 6.20	1	LS
655.802	LIGHTNING SUPPRESSION SYSTEM - LIMERICK ROAD MM 28.30	1	LS
655.803	LIGHTNING SUPPRESSION SYSTEM - HOLMES ROAD MM 43.0	1	LS
655.804	LIGHTNING SUPPRESSION SYSTEM - MOUNTAIN ROAD MM 53.40	1	LS
655.805	LIGHTNING SUPPRESSION SYSTEM - YORK - EXIT 7	1	LS
655.806	LIGHTNING SUPPRESSION SYSTEM - WELLS - EXIT 19 EASTBOUND	1	LS
655.807	LIGHTNING SUPPRESSION SYSTEM - WELLS - EXIT 19 WESTBOUND	1	LS
655.808	LIGHTNING SUPPRESSION SYSTEM - KENNEBUNK - EXIT 25	1	LS
655.809	LIGHTNING SUPPRESSION SYSTEM - SOUTH PORTLAND - EXIT 45	1	LS
655.810	LIGHTNING SUPPRESSION SYSTEM - FALMOUTH - EXIT 53	1	LS
655.811	LIGHTNING SUPPRESSION SYSTEM - BIDDEFORD - EXIT 32	1	LS
656.751	TEMPORARY SOIL EROSION AND WATER POLLUTION CONTROL	1	LS
659.10	MOBILIZATION	1	LS
661.10	TOLL STIPEND	1	LS

Date: 11/19/2026

Username: EHANDLEY

Scale:

No.	Revision	By	Date

Designed by: HNTB

CONSULTANT PROJECT MANAGER: Daniel Bouchard, P.E.

	By	Date		By	Date
Designed	GLS	11/2026	Checked	BRG	11/2026
Drawn	ERB	11/2026	In Charge of	TRC	11/2026

HNTB CORPORATION
82 Running Hill Road, Suite 201
South Portland, ME 04106

TEL (207) 774-5155
FAX (207) 228-0909

MAINE TURNPIKE

THE GOLD STAR MEMORIAL HIGHWAY

MTA PROJECT MANAGER: Eric Barnes, P.E.

VARIABLE MESSAGE SIGN REPLACEMENT – VARIOUS LOCATIONS

ESTIMATED QUANTITIES

SHEET NUMBER: EQ-01

CONTRACT: 2026.23

Filename: Quantities.dgn

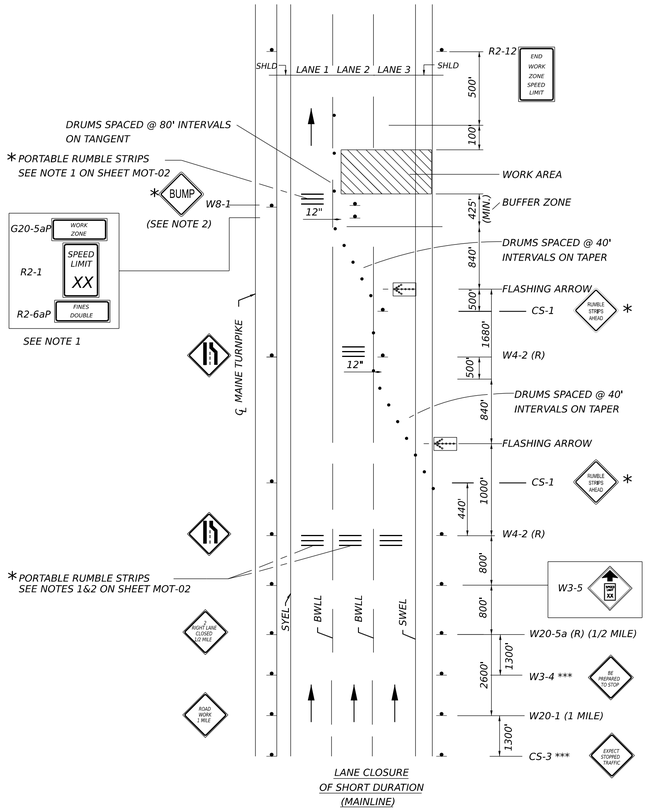

LANE CLOSURE
OF SHORT DURATION
(MAINLINE)

DOUBLE LANE CLOSURE - SIGNS ON EASELS

* OPTIONAL
*** TO BE USED DURING STOPPAGES OF TRAFFIC

NOTE:

1. FOR EASEL SET UP ONLY, THIS SIGN IS NOT BRACKETED. ONE SIGN ASSEMBLY IS PLACED AT THE END OF THE TAPER .
2. THIS LAYOUT IS INTENDED FOR USE AT THE CIDER HILL ROAD AND HOLMES ROAD LOCATIONS AS NECESSARY TO ACCOMMODATE TRAFFIC FROM THE CORRESPONDING RAMPS AT THESE LOCATIONS UTILIZING THE CENTER TRAVEL LANE.

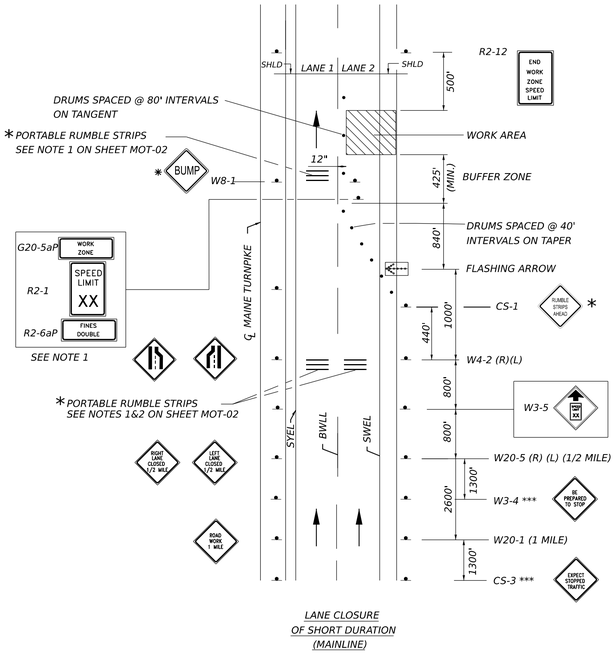

LANE CLOSURE
OF SHORT DURATION
(MAINLINE)

SINGLE LANE CLOSURE - SIGNS ON EASELS

* OPTIONAL
*** TO BE USED DURING STOPPAGES OF TRAFFIC

NOTE:

1. FOR EASEL SET UP ONLY, THIS SIGN IS NOT BRACKETED. ONE SIGN ASSEMBLY IS PLACED AT THE END OF THE TAPER .

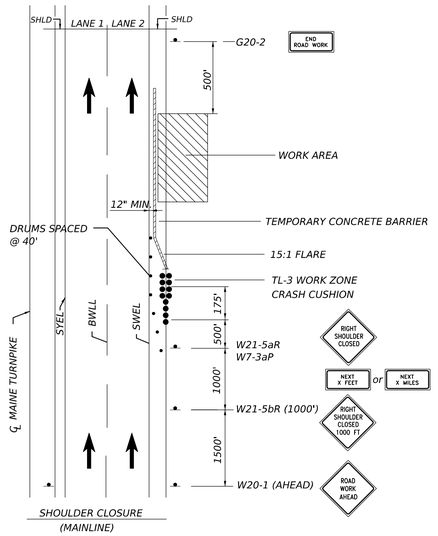

SHOULDER CLOSURE

NOTES:

1. THE W20-1 AND G20-2 SIGNS ARE NOT REQUIRED IF THE SHOULDER CLOSURE IS WITHIN A PREVIOUSLY ESTABLISHED WORK ZONE.
2. MULTIPLE SHOULDER CLOSURES WITHIN THE SAME WORK ZONE MUST BE SUBMITTED FOR REVIEW AND APPROVAL BY MTA.

SHOULDER WORK

(OF SHORT DURATION (MAINLINE))

NOTES:

1. THE W20-1 AND G20-2 SIGNS ARE NOT REQUIRED IF THE SHOULDER CLOSURE IS WITHIN A PREVIOUSLY ESTABLISHED WORK ZONE.

Date: 11/19/2026
Username: EHANDLEY

Scale: NOT TO SCALE

No.	Revision	By	Date

Designed by: HNTB

CONSULTANT PROJECT MANAGER: Daniel Bouchard, P.E.

	By	Date		By	Date
Designed	ETH	11/2026	Checked	EDD	11/2026
Drawn	ETH	11/2026	In Charge of	TRC	11/2026

HNTB CORPORATION
82 Running Hill Road, Suite 201
South Portland, ME 04106

TEL (207) 774-5155
FAX (207) 228-0909

MAINE TURNPIKE

THE GOLD STAR MEMORIAL HIGHWAY

MTA PROJECT MANAGER: Eric Barnes, P.E.

VARIABLE MESSAGE SIGN REPLACEMENT – VARIOUS LOCATIONS

MAINTENANCE OF TRAFFIC DETAILS I

SHEET NUMBER: MOT-01

CONTRACT: 2026.23

Filename: Staging.dgn

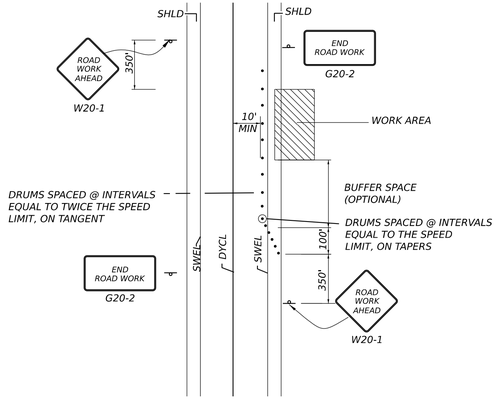

TEMP. LOCAL ROAD SHOULDER CLOSURE

NOTES:
1. FOR SHORT DURATION WORK (<1 HOUR), THE TAPER AND CHANNELIZATION DEVICES MAY BE OMITTED IF SHADOW VEHICLE IS PRESENT WITH ACTIVATED HIGH-INTENSITY ROTATING, FLASHING, OSCILLATING OR STROBE LIGHTS.

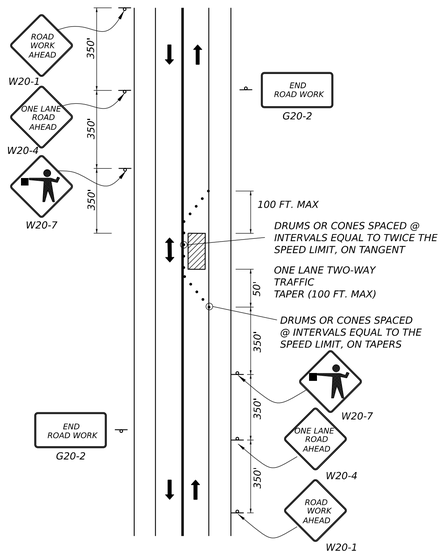

LOCAL ROAD SINGLE LANE CLOSURE

NOTES:
1. ROAD WORK AHEAD & END ROAD WORK SIGNS MAY BE OMITTED FOR SHORT DURATION OPERATIONS (LESS THAN 1 HOUR).

2. FLAGGERS SHALL BE LOCATED SO THEY ARE CLEARLY VISIBLE TO APPROACHING DRIVERS.

3. SIGN SPACING ASSUMES LOCAL ROAD SPEED IS 40 MPH OR LESS.

GENERAL MAINTENANCE OF TRAFFIC NOTES:

1. ALL PAVEMENT STRIPING & SIGNING SHALL BE IN ACCORDANCE WITH THE *MANUAL UNIFORM TRAFFIC CONTROL DEVICES*, U.S.D.O.T., F.H.W.A., LATEST EDITION.

2. THESE PLANS SHOW THE GENERAL CONDITION FOR TURNPIKE MAINLINE TRAFFIC CONTROL. DURING CONSTRUCTION, SLIGHT MODIFICATIONS IN CONSTRUCTION PROCEDURE MAY OCCUR AND MAY REQUIRE SOME MINOR ADJUSTMENTS TO BE MADE IN THE FIELD, ALL PROCEDURES MUST BE APPROVED BY THE RESIDENT.

3. THE CONTRACTOR SHALL REMOVE ALL PAVEMENT MARKINGS THAT CONFLICT WITH PROPOSED PAVEMENT MARKINGS IN ACCORDANCE WITH THE SPECIFICATIONS, MUTCD, AND AS DIRECTED BY THE RESIDENT.

4. EXPOSED BARRIER ENDS SHALL BE PROTECTED BY A WORK ZONE CRASH CUSHION. PAYMENT WILL BE UNDER ITEM 527.341 - WORK ZONE CRASH CUSHION - TL-3.

5. GEOMETRIC INFORMATION FOR TRAFFIC PHASES SHOWN ON THE PLANS WILL BE SUPPLIED TO THE CONTRACTOR AFTER AWARD.

6. SPEED LIMIT, STOP AND YIELD SIGNS SHALL BE A MINIMUM OF 5' ABOVE THE PAVEMENT.

ABBREVIATIONS FOR ALL M.O.T. PLANS

BWLL = BROKEN WHITE LANE LINE
SWLL = SOLID WHITE LANE LINE
SYLL = SOLID YELLOW LINE
TBWLL - TEMPORARY BROKEN WHITE LANE LINE
TSWLL = TEMPORARY SOLID WHITE LANE LINE
TSYLL = TEMPORARY SOLID YELLOW LANE LINE

TEMPORARY RUMBLE STRIP NOTES

1. IF RUMBLE STRIPS ARE USED THEY SHALL BE PLACED IN ONE OF THE FOLLOWING CONFIGURATIONS:
 * ADJACENT TO THE WORK ZONE (1 UNIT)
 * UPSTREAM FROM THE TAPER FOR THE WORKZONE (2 UNITS)
 * BOTH ADJACENT TO THE WORKZONE AND PRIOR TO THE TAPER (3 UNITS)

W8-1 SIGNS SHALL BE PLACED ADJACENT TO THE FIRST RUMBLE STRIP AT ANY LOCATION. ONLY ONE SET OF W8-24a SIGNS ARE REQUIRED FOR ANY OF THE ABOVE CONFIGURATIONS.

2. RUMBLE STRIPS MAY BE PLACED UPSTREAM OF THE TAPER BETWEEN THE W3-5 SIGNS AND THE W4-2 SIGNS. IF RUMBLE STRIPS ARE INSTALLED PRIOR TO TAPER, W8-1 SIGNS SHALL BE PLACED ADJACENT TO THE FIRST STRIP AND THE W8-24a SIGNS SHALL BE MOVED TO 400' AFTER THE W20-5 SIGNS.

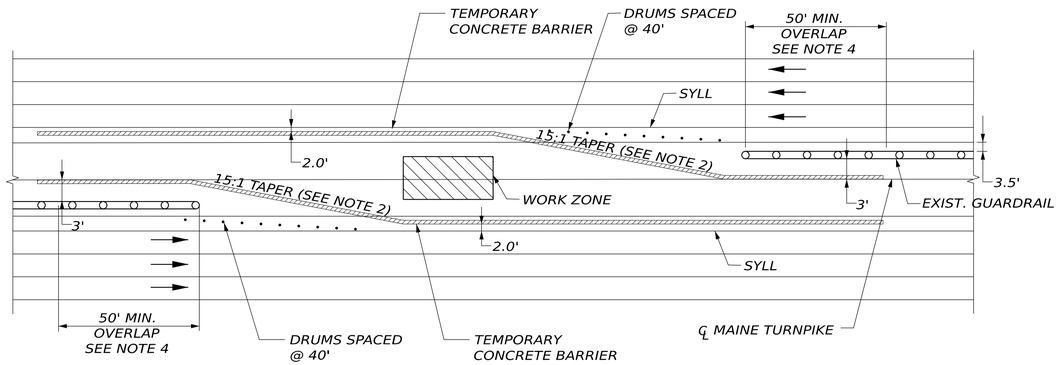

MEDIAN SHOULDER CLOSURE

NOTES

1. BARRIER ENDS SHALL BE PROTECTED BY A WORK ZONE CRASH CUSHION (TL-3) IF NOT LAPPED BEHIND GUARDRAIL. THIS SHALL BE REQUIRED FOR THE SOUTHBOUND SHOULDER CLOSURE OF HOLMES ROAD.

2. 15:1 MINIMUM TAPERED BARRIER LENGTH DEPENDENT ON LOCATION OF BARRIER RELATIVE TO MAINE TURNPIKE SHOULDERS OR LANES.

3. IF A WORK ZONE CRASH CUSHION - TL3 IS USED FOR A MEDIAN SHOULDER CLOSURE, THE CRASH CUSHION SYSTEM MUST BE FOUNDED ON A LEVEL SURFACE IN ACCORDANCE WITH THE MANUFACTURER'S RECOMMENDATIONS. ANY WORK NECESSARY TO PROVIDE A LEVEL SURFACE WILL BE INCIDENTAL TO THE CRASH CUSHION ITEM.

4. IF THE 50' MIN. LENGTH OF OVERLAP CANNOT BE MET, THEN THE EXISTING GUARDRAIL END MUST BE ANCHORED IN ACCORDANCE WITH DRAWING SEW02a IN THE AASHTO-AGC-ARBTA JOINT COMMITTEE TASK FORCE 13 REPORT, DRAFTED MAY 1995.

5. PAYMENT SHALL BE INCIDENTAL TO 652.361 MAINTENANCE OF TRAFFIC CONTROL DEVICES.

Username: EHANDLEY
Date: 11/19/2026

Scale: NOT TO SCALE

No.	Revision	By	Date

Designed by: HNTB

CONSULTANT PROJECT MANAGER: Daniel Bouchard, P.E.

	By	Date		By	Date
Designed	ETH	11/2026	Checked	EDD	11/2026
Drawn	ETH	11/2026	In Charge of	TRC	11/2026

HNTB CORPORATION
82 Running Hill Road, Suite 201
South Portland, ME 04106

TEL (207) 774-5155
FAX (207) 228-0909

MAINE TURNPIKE

THE GOLD STAR MEMORIAL HIGHWAY

MTA PROJECT MANAGER: Eric Barnes, P.E.

VARIABLE MESSAGE SIGN REPLACEMENT – VARIOUS LOCATIONS

MAINTENANCE OF TRAFFIC DETAILS II

SHEET NUMBER: MOT-02

CONTRACT: 2026.23

Filename: Staging.dgn

PROVIDE ONE (1) 3-INCH CONDUIT STUB INTO EACH VMS STRUCTURE COLUMN THROUGH THE FOUNDATION. EXTEND EACH CONDUIT A MINIMUM OF 5 FEET BEYOND THE OUTSIDE FACE OF THE FOUNDATION FOR FUTURE CONNECTION. TERMINATE CONDUITS WITHIN STRUCTURE COLUMNS A MIN 3" ABOVE FOUNDATION. CAP END OF CONDUIT UNDERGROUND.

EXISTING NORTHBOUND MEDIAN DOUBLE-RAIL GUARDRAIL HAS AN EXISTING POST SPACING OF APPROXIMATELY 6'-3". INSTALL ADDITIONAL POSTS AND OFFSET BLOCKS TO REDUCE POST SPACING TO 3'-1½" BEGINNING AT THE RELOCATED STRUCTURE AND EXTENDING APPROXIMATELY 25 FEET SOUTH, OR AS DIRECTED BY THE RESIDENT.

MAINE TURNPIKE (I-95) NB

CONSTRUCT NEW VMS STRUCTURE AND FOUNDATIONS APPROXIMATELY 10 FEET SOUTH OF THE EXISTING VMS STRUCTURE. REFER TO THE STRUCTURAL PLANS FOR FOUNDATION, ANCHOR BOLT, AND STRUCTURE DETAILS. VMS SHALL BE CENTERED OVER EXISTING TRAVEL LANES.

PROPOSED VMS

INSTALL NEW CAMERA AND TWO (2) POINT-TO-POINT RADIO ANTENNAS AT THE LOCATION SHOWN. CAMERA AND RADIO ANTENNAS SUPPLIED BY MTA. REFER TO THE STRUCTURAL PLANS FOR MAST DETAILS. COORDINATE CAMERA AND POINT-TO-POINT RADIO CONFIGURATION, ALIGNMENT, AND COMMISSIONING WITH THE MTA DIRECTOR OF ITS.

REMOVE AND RESET GUARDRAIL AS REQUIRED TO ACCESS AND INSTALL FOUNDATIONS (TYP.)

REMOVE THE EXISTING VARIABLE MESSAGE SIGN (VMS), SIGN STRUCTURE, FOUNDATIONS, AND ALL ASSOCIATED HARDWARE COMPLETELY. SEE STRUCTURAL PLANS FOR DEMOLITION DETAILS.

EXISTING VMS CABINET LOCATION: REMOVE EXISTING GROUND MOUNTED CABINET AND FOUNDATION COMPLETELY.

EXISTING HAR POLE, CABINET, AND POINT-TO-POINT RADIO SHALL REMAIN IN SERVICE THROUGHOUT CONSTRUCTION. PROTECT ALL EQUIPMENT FROM DAMAGE AND MAINTAIN CONTINUOUS OPERATION UNLESS OTHERWISE APPROVED BY THE ENGINEER. REMOVE THE EXISTING POINT-TO-POINT RADIO ONLY AFTER THE NEW POINT-TO-POINT RADIO SYSTEM HAS BEEN INSTALLED, TESTED, COMMISSIONED, AND ACCEPTED BY THE MTA DIRECTOR OF ITS AS FULLY OPERATIONAL.

BM (1) = 100.00' (PK NAIL IN WOOD UTILITY POLE)

MAINTAIN EXISTING SHALLOW DRAINAGE IN ACCESS ROAD OFF FROM CONCRETE SWALE UNDER BRIDGE

PROVIDE ONE (1) 3-INCH CONDUIT STUB INTO EACH VMS STRUCTURE COLUMN FROM THE VMS CABINET THROUGH THE FOUNDATION. INSTALL ONE (1) CONDUIT DEDICATED TO ELECTRICAL POWER AND ONE (1) CONDUIT DEDICATED TO COMMUNICATIONS. TERMINATE CONDUITS WITHIN THE STRUCTURE COLUMNS A MIN 3" ABOVE THE FOUNDATION. SEAL ALL CONDUIT PENETRATIONS AFTER CABLE INSTALLATION.

1- 2" CONDUIT

16'-0"

PROVIDE POWER AND COMMUNICATION CONDUIT FROM THE NEW VMS CABINET TO THE EXISTING HAR CABINET. LOCATE EXISTING UNDERGROUND CONDUIT PRIOR TO CONNECTION AT THE HAR CABINET. PROVIDE NEW CONDUCTORS AND CAT 6A CABLE FOR A COMPLETE INSTALLATION.

36"x24"x24" ELECTRIC QUAZITE JUNCTION BOX

2- 3" CONDUITS

NEW GROUND MOUNTED CABINET LOCATION ON BACK SLOPE

2- 3" CONDUITS

UG POW

UG COMM

UG COMM

UG POW

SEE ACCESS ROAD TYPICAL DETAIL

CIDER HILL ROAD

2- 3" CONDUITS

REMOVE THE EXISTING METER PEDESTAL COMPLETELY. COORDINATE WORK WITH THE SERVING ELECTRICAL UTILITY.

CLL

UG COMM

UG POW

FURNISH AND INSTALL A NEW METER PEDESTAL COMPLETE WITH METER SOCKET WITH LEVER BYPASS AND 100-AMP DISCONNECT. COORDINATE METER INSTALLATION WITH THE SERVING ELECTRICAL UTILITY.

36"x24"x24" COMMUNICATION QUAZITE JUNCTION BOX

2- 3" CONDUITS

EXISTING SERVICE POLE TO REMAIN. REMOVE AND REPLACE THE EXISTING SERVICE CONDUIT AND CONDUCTORS COMPLETELY.

NOTES:

1. REMOVE THE EXISTING UNDERGROUND CONDUITS AND ASSOCIATED WIRING BETWEEN THE EXISTING CABINET/METER PEDESTAL/SERVICE POLE AND BETWEEN THE EXISTING CABINET/SIGN FOUNDATION (INCIDENTAL TO CONTRACT).

2. INSTALL TEMPORARY SOIL, EROSION, AND WATER POLLUTION CONTROLS PER MAINEDEP BEST MANAGEMENT PRACTICES, SUPPLEMENTAL SPECIFICATION 656, AND AS DIRECTED BY THE RESIDENT.

3. SERVICES FOR VMS SIGN:
   - COMMUNICATIONS = MTA RADIO NETWORK
   - POWER = CENTRAL MAINE POWER

4. ALL FEATURES SHOWN ON THIS SHEET ARE LOCATED WITHIN THE MAINE TURNPIKE AUTHORITY RIGHT-OF-WAY.

5. VERTICAL CONTROL: ALL ELEVATIONS SHOWN ON THE OVERHEAD SIGN STRUCTURE ELEVATION AND FOUNDATION DETAILS ARE REFERENCED TO A LOCAL VERTICAL DATUM. BENCHMARK BM (1) HAS AN ASSUMED ELEVATION OF 100.00 FEET AND IS MARKED BY A P.K. NAIL WITH PINK RIBBON SET IN THE WOOD UTILITY POLE ASSOCIATED WITH THE HIGHWAY ADVISORY RADIO (HAR) ANTENNA.

Date: 11/19/2026
Username: EHANDLEY

Scale: 10 0 10 20
1" = 10'

No.	Revision	By	Date

Designed by: HNTB

CONSULTANT PROJECT MANAGER: Daniel Bouchard, P.E.

	By	Date		By	Date
Designed	ETH	11/2026	Checked	DGB	11/2026
Drawn	ETH	11/2026	In Charge of	TRC	11/2026

HNTB CORPORATION
82 Running Hill Road, Suite 201
South Portland, ME 04106

TEL (207) 774-5155
FAX (207) 228-0909

MAINE TURNPIKE

THE GOLD STAR MEMORIAL HIGHWAY

MTA PROJECT MANAGER: Eric Barnes, P.E.

VARIABLE MESSAGE SIGN REPLACEMENT – VARIOUS LOCATIONS
OVERHEAD SIGN STRUCTURE MM 6.20 CIDER HILL ROAD (NORTHBOUND)

SHEET NUMBER: SP-01

CONTRACT: 2026.23

Filename: Plan_(Cider Hill Road MM 6.2).dgn

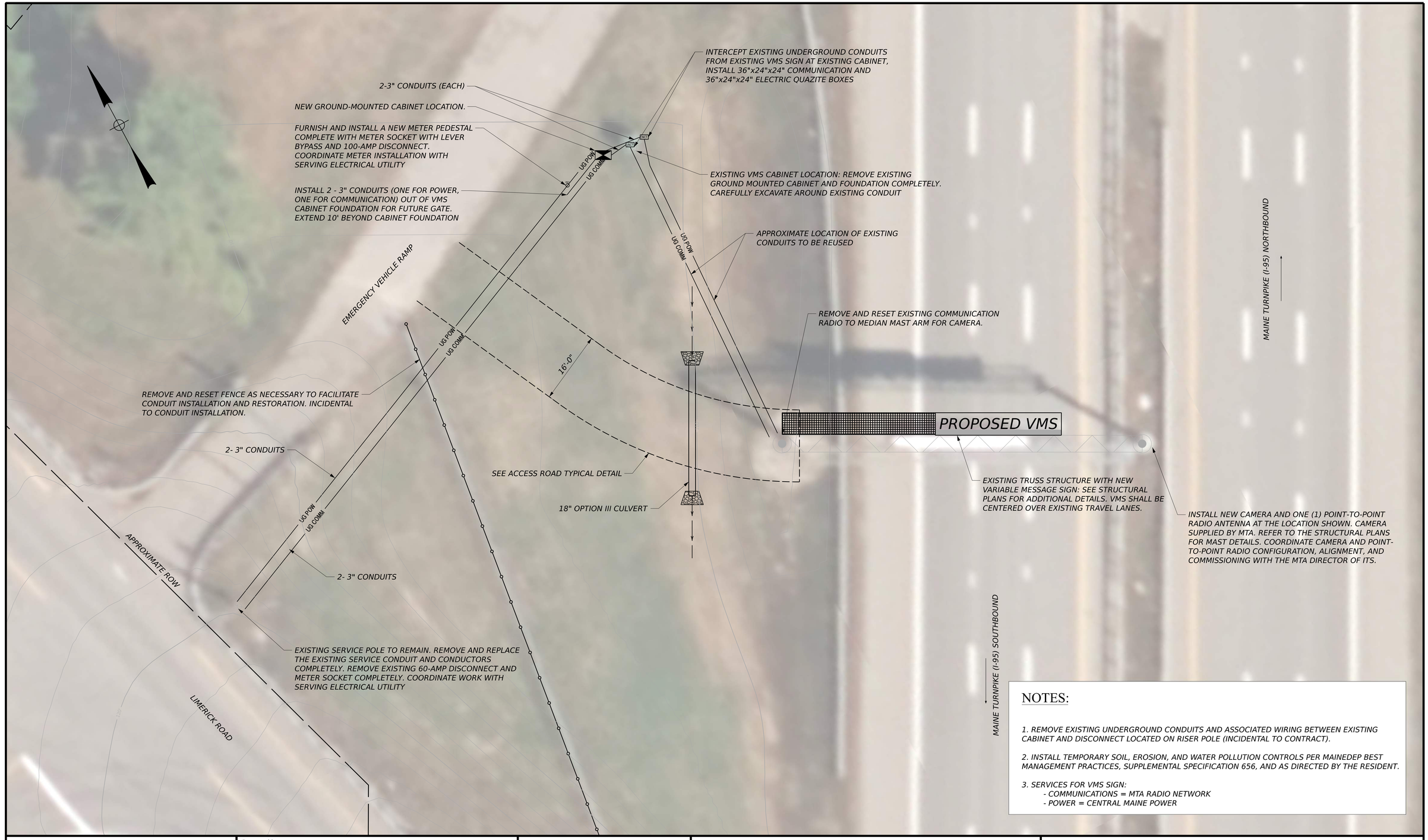

NOTES:

1. REMOVE EXISTING UNDERGROUND CONDUITS AND ASSOCIATED WIRING BETWEEN EXISTING CABINET AND DISCONNECT LOCATED ON RISER POLE (INCIDENTAL TO CONTRACT).

2. INSTALL TEMPORARY SOIL, EROSION, AND WATER POLLUTION CONTROLS PER MAINEDEP BEST MANAGEMENT PRACTICES, SUPPLEMENTAL SPECIFICATION 656, AND AS DIRECTED BY THE RESIDENT.

3. SERVICES FOR VMS SIGN:
   - COMMUNICATIONS = MTA RADIO NETWORK
   - POWER = CENTRAL MAINE POWER

Username: EHANDLEY Date: 11/19/2026

Scale: 10 0 10 20 — 1" = 10'

No.	Revision	By	Date

Designed by: HNTB

CONSULTANT PROJECT MANAGER: Daniel Bouchard, P.E.

	By	Date		By	Date
Designed	ETH	11/2026	Checked	DGB	11/2026
Drawn	ETH	11/2026	In Charge of	TRC	11/2026

HNTB CORPORATION
82 Running Hill Road, Suite 201
South Portland, ME 04106

TEL (207) 774-5155
FAX (207) 228-0909

MAINE TURNPIKE

THE GOLD STAR MEMORIAL HIGHWAY

MTA PROJECT MANAGER: Eric Barnes, P.E.

VARIABLE MESSAGE SIGN REPLACEMENT – VARIOUS LOCATIONS
OVERHEAD SIGN STRUCTURE MM 28.30 LIMERICK ROAD (SOUTHBOUND)

SHEET NUMBER: SP-02

CONTRACT: 2026.23

Filename: Plan_(Limerick Road MM 28.3).dgn

REMOVE AND REPLACE PAVEMENT AND SUBBASE AS NECESSARY TO INSTALL BARRIER, INCIDENTAL TO BARRIER PAY ITEM

EXTEND EXISTING CONCRETE BARRIER BY 20', MATCH EXISTING BARRIER SHAPE AND PROFILE. SEE BARRIER PLANS FOR DETAILS.

PROVIDE ONE (1) 3-INCH CONDUIT STUB INTO EACH VMS STRUCTURE COLUMN THROUGH THE FOUNDATION. EXTEND EACH CONDUIT A MINIMUM OF 5 FEET BEYOND THE OUTSIDE FACE OF THE FOUNDATION FOR FUTURE CONNECTION. TERMINATE CONDUITS WITHIN STRUCTURE COLUMNS A MIN 3" ABOVE FOUNDATION. CAP END OF CONDUIT UNDERGROUND.

CONSTRUCT NEW VMS STRUCTURE AND FOUNDATIONS APPROXIMATELY 50 FEET SOUTH OF THE EXISTING VMS STRUCTURE. REFER TO THE STRUCTURAL PLANS FOR FOUNDATION, ANCHOR BOLT, AND STRUCTURE DETAILS. VMS SHALL BE CENTERED OVER EXISTING TRAVEL LANES.

PROVIDE ONE (1) 3-INCH CONDUIT STUB INTO EACH VMS STRUCTURE COLUMN FROM THE VMS CABINET THROUGH THE FOUNDATION. INSTALL ONE (1) CONDUIT DEDICATED TO ELECTRICAL POWER AND ONE (1) CONDUIT DEDICATED TO COMMUNICATIONS. TERMINATE CONDUITS WITHIN THE STRUCTURE COLUMNS A MIN 3" ABOVE FOUNDATION. SEAL ALL CONDUIT PENETRATIONS AFTER CABLE INSTALLATION.

SEE ACCESS ROAD STANDARD DETAIL

36" CULVERT OPTION III
REMOVE EXISTING RIP RAP FROM DITCH LINE PRIOR TO INSTALLING CULVERT

EXISTING DITCHLINE

CLEARING LIMITS

NEW GROUND MOUNTED CABINET LOCATION

3- 3" CONDUIT

1 36"x24"x24" ELECTRIC AND 1 36"x24"x24" COMMUNICATION QUAZITE JUNCTION BOX

16'-0"

3- 3" CONDUIT

MAINE TURNPIKE (I-95) SOUTHBOUND

PROPOSED VMS

INSTALL NEW CAMERA AND TWO (2) POINT-TO-POINT RADIO ANTENNAS AT THE LOCATION SHOWN. CAMERA AND RADIO ANTENNAS SUPPLIED BY MTA. REFER TO THE STRUCTURAL PLANS FOR MAST DETAILS. COORDINATE CAMERA AND POINT-TO-POINT RADIO CONFIGURATION, ALIGNMENT, AND COMMISSIONING WITH THE MTA DIRECTOR OF ITS.

REMOVE THE EXISTING VARIABLE MESSAGE SIGN (VMS), SIGN STRUCTURE, FOUNDATIONS, AND ALL ASSOCIATED HARDWARE COMPLETELY. SEE STRUCTURAL PLANS FOR DEMOLITION DETAILS.

EXISTING UNDERGROUND 36" RCP CULVERT OUTLET

EXISTING SERVICE POLE, METER, AND DISCONNECT TO REMAIN. RUN NEW ELECTRICAL CONDUITS DIRECTLY TO POLE MOUNTED METER. BYPASS EXISTING QUAZITE JUNCTION BOXES AT BASE OF POLE. RUN NEW COMMUNICATION CONDUIT DIRECTLY TO POLE, A MIN OF 10' ABOVE EXISTING GRADE. COORDINATE WITH UTILITY FOR DISCONNECT AND RECONNECT.

REMOVE EXISTING CONDUITS, CONDUCTORS, AND COMMUNICATION CABLE FROM CABINET TO SIGN STRUCTURE.

1 36"x24"x24" ELECTRIC AND 1 36"x24"x24" COMMUNICATION QUAZITE JUNCTION BOX

2- 3" CONDUIT (EACH)

UG COMM

UG POW

CLL

LIMIT DISTURBANCE AND CLEARING ACTIVITIES IN AREA OF EXISTING SWALE. CONDUITS SHALL BE DIRECTIONALLY BORED UNDER EXISTING SWALE, OPEN EXCAVATION IS NOT ALLOWED BETWEEN QUAZITE BOXES.

EXISTING WETLAND BOUNDARIES. INSTALL EROSION CONTROL BARRIER ALONG WETLAND EDGE PRIOR TO COMMENCEMENT OF SITE WORK. NO TEMPORARY SIDE CASTINGS OF SPOILS INTO WETLANDS.

EXISTING VMS CABINET LOCATION. REMOVE EXISTING GROUND MOUNTED CABINET AND FOUNDATION COMPLETELY.

EXISTING HAR POLE AND CABINET SHALL REMAIN IN SERVICE THROUGHOUT CONSTRUCTION. PROTECT ALL EQUIPMENT FROM DAMAGE AND MAINTAIN CONTINUOUS OPERATION UNLESS OTHERWISE APPROVED BY THE MTA DIRECTOR OF ITS.

BM (1) = 100.00' (PK NAIL IN WOOD UTILITY POLE)

EXISTING POWER FROM METER LOAD CENTER TO HAR SHALL REMAIN

MAINE TURNPIKE (I-95) NORTHBOUND

HOLMES ROAD

APPROXIMATE ROW

NOTES:

1. REMOVE THE EXISTING UNDERGROUND CONDUITS AND ASSOCIATED WIRING BETWEEN THE EXISTING CABINET/DISCONNECT LOCATED ON THE SERVICE POLE AND THE EXISTING CABINET/SIGN FOUNDATION (INCIDENTAL TO CONTRACT).

2. INSTALL TEMPORARY SOIL, EROSION, AND WATER POLLUTION CONTROLS PER MAINEDEP BEST MANAGEMENT PRACTICES, SUPPLEMENTAL SPECIFICATION 656, AND AS DIRECTED BY THE RESIDENT.

3. SERVICES FOR VMS SIGN:
   - COMMUNICATIONS = SPECTRUM
   - POWER = CENTRAL MAINE POWER

4. ALL FEATURES SHOWN ON THIS SHEET ARE LOCATED WITHIN THE MAINE TURNPIKE AUTHORITY RIGHT-OF-WAY.

5. VERTICAL CONTROL: ALL ELEVATIONS SHOWN ON THE OVERHEAD SIGN STRUCTURE ELEVATION AND FOUNDATION DETAILS ARE REFERENCED TO A LOCAL VERTICAL DATUM. BENCHMARK BM (1) HAS AN ASSUMED ELEVATION OF 100.00 FEET AND IS MARKED BY A P.K. NAIL WITH PINK RIBBON SET IN THE WOOD UTILITY POLE ASSOCIATED WITH ELECTRICAL SERVICE.

Date: 11/19/2026
Username: EBEAUSOLEIL

Scale: 10 0 10 20
1" = 10'

No.	Revision	By	Date

Designed by: HNTB

CONSULTANT PROJECT MANAGER: Daniel Bouchard, P.E.

	By	Date		By	Date
Designed	ETH	11/2026	Checked	DGB	11/2026
Drawn	ETH	11/2026	In Charge of	TRC	11/2026

HNTB CORPORATION
82 Running Hill Road, Suite 201
South Portland, ME 04106

TEL (207) 774-5155
FAX (207) 228-0909

MAINE TURNPIKE

THE GOLD STAR MEMORIAL HIGHWAY

MTA PROJECT MANAGER: Eric Barnes, P.E.

VARIABLE MESSAGE SIGN REPLACEMENT – VARIOUS LOCATIONS
OVERHEAD SIGN STRUCTURE MM 43.00 HOLMES ROAD (NORTHBOUND)

SHEET NUMBER: SP-03

CONTRACT: 2026.23

Filename: Plan_(Holmes Road MM 43.0).dgn

APPROXIMATE LOCATION OF EXISTING WATER LINE. COORDINATE WITH SERVING UTILITY TO AVOID CONFLICT WITH NEW SERVICE POLE LOCATION. ENSURE NEW SERVICE POLE IS PLACED ON NON-ROADWAY SIDE OF WATER LINE

REMOVE THE EXISTING METER PEDESTAL COMPLETELY. COORDINATE WORK WITH THE SERVING ELECTRICAL UTILITY.

REMOVE EXISTING AND PROVIDE NEW SERVICE POLE. REMOVE THE EXISTING SERVICE CONDUIT AND CONDUCTORS COMPLETELY BETWEEN THE EXISTING RISER POLE AND THE METER PEDESTAL. COORDINATE WORK WITH THE SERVING ELECTRICAL UTILITY.

CLL

UG COMM

UG POW

2 - 3" CONDUIT

CLEAR VEGETATION AND TREES FROM AROUND NEW SERVICE POLE, 15' MINIMUM ALL SIDES.

CLEARING LIMITS

2 - 3" CONDUITS

CLEAR EXISTING PATH THROUGH WOODS

FURNISH AND INSTALL A NEW METER PEDESTAL COMPLETE WITH METER SOCKET WITH LEVER BYPASS AND 100-AMP DISCONNECT. COORDINATE METER INSTALLATION WITH THE SERVING ELECTRICAL UTILITY.

NEW GROUND MOUNTED CABINET LOCATION

36"x24"x24" ELECTRIC QUAZITE JUNCTION BOX

INSTALL TWO (2) 3-INCH CONDUIT STUBS INTO VMS STRUCTURE COLUMN FROM THE VMS CABINET THROUGH THE FOUNDATION. INSTALL ONE (1) CONDUIT DEDICATED TO ELECTRICAL POWER AND ONE (1) CONDUIT DEDICATED TO COMMUNICATIONS. TERMINATE CONDUITS WITHIN THE STRUCTURE COLUMNS A MIN 3" ABOVE FOUNDATION. SEAL ALL CONDUIT PENETRATIONS AFTER CABLE INSTALLATION.

36"x24"x24" COMMUNICATION QUAZITE JUNCTION BOX

EXISTING VMS CABINET LOCATION: REMOVE EXISTING GROUND MOUNTED CABINET AND FOUNDATION COMPLETELY.

REMOVE AND RESET EXISTING POINT-TO-POINT RADIO ANTENNA FROM EXISTING STRUCTURE TO NEW MEDIAN MAST.

BM (1) = 100.00' (PK NAIL ON NORTH SIDE OF BRIDGE PIER)

MOUNTAIN ROAD

RELOCATE EXISTING VMS STRUCTURE FROM HOLMES ROAD WITH NEW FOUNDATIONS APPROXIMATELY 10 FEET SOUTH OF THE EXISTING VMS STRUCTURE. REFER TO THE STRUCTURAL PLANS FOR FOUNDATION, ANCHOR BOLT, AND STRUCTURE DETAILS. VMS SHALL BE CENTERED OVER EXISTING TRAVEL LANES.

PROPOSED VMS

REMOVE THE EXISTING VARIABLE MESSAGE SIGN (VMS), SIGN STRUCTURE, FOUNDATIONS, AND ALL ASSOCIATED HARDWARE COMPLETELY. SEE STRUCTURAL PLANS FOR DEMOLITION DETAILS.

REMOVE AND RESET GUARDRAIL AS REQUIRED TO ACCESS AND INSTALL FOUNDATIONS (TYP.)

MAINE TURNPIKE (I-95) SOUTHBOUND

INSTALL NEW CAMERA (SUPPLIED BY MTA) AND ONE (1) POINT-TO-POINT RADIO ANTENNA (RESET FROM EXISTING STRUCTURE) AT THE LOCATION SHOWN. REFER TO THE STRUCTURAL PLANS FOR MAST DETAILS. COORDINATE CAMERA AND POINT-TO-POINT RADIO CONFIGURATION, ALIGNMENT, AND COMMISSIONING WITH THE MTA DIRECTOR OF ITS.

PROVIDE TWO (2) 3-INCH CONDUIT STUBS INTO VMS STRUCTURE COLUMN THROUGH THE FOUNDATION. EXTEND EACH CONDUIT A MINIMUM OF 5 FEET BEYOND THE OUTSIDE FACE OF THE FOUNDATION FOR FUTURE CONNECTION. TERMINATE CONDUITS WITHIN STRUCTURE COLUMNS A MIN 3" ABOVE FOUNDATION. CAP END OF CONDUIT UNDERGROUND.

MAINE TURNPIKE (I-95) NORTHBOUND

NOTES:

1. REMOVE THE EXISTING UNDERGROUND CONDUITS AND ASSOCIATED WIRING BETWEEN THE EXISTING CABINET/METER PEDESTAL/SERVICE POLE AND BETWEEN THE EXISTING CABINET/SIGN FOUNDATION (INCIDENTAL TO CONTRACT).

2. INSTALL TEMPORARY SOIL, EROSION, AND WATER POLLUTION CONTROLS PER MAINEDEP BEST MANAGEMENT PRACTICES, SUPPLEMENTAL SPECIFICATION 656, AND AS DIRECTED BY THE RESIDENT.

3. SERVICES FOR VMS SIGN:
- COMMUNICATIONS = MTA RADIO NETWORK
- POWER = CENTRAL MAINE POWER

4. VERTICAL CONTROL: ALL ELEVATIONS SHOWN ON THE OVERHEAD SIGN STRUCTURE ELEVATION AND FOUNDATION DETAILS ARE REFERENCED TO A LOCAL VERTICAL DATUM. BENCHMARK BM (1) HAS AN ASSUMED ELEVATION OF 100.00 FEET AND IS MARKED BY A P.K. NAIL WITH PINK RIBBON SET IN THE NORTH FACE OF THE SOUTHBOUND BRIDGE PIER LOCATED OFF THE RIGHT SHOULDER.

Date: 11/19/2026

Username: EHANDLEY

Scale: 10 0 10 20

1" = 10'

No.	Revision	By	Date

Designed by: HNTB

CONSULTANT PROJECT MANAGER: Daniel Bouchard, P.E.

	By	Date		By	Date
Designed	ETH	11/2026	Checked	DGB	11/2026
Drawn	ETH	11/2026	In Charge of	TRC	11/2026

HNTB CORPORATION
82 Running Hill Road, Suite 201
South Portland, ME 04106

TEL (207) 774-5155
FAX (207) 228-0909

MAINE TURNPIKE

THE GOLD STAR MEMORIAL HIGHWAY

MTA PROJECT MANAGER: Eric Barnes, P.E.

VARIABLE MESSAGE SIGN REPLACEMENT – VARIOUS LOCATIONS

OVERHEAD SIGN STRUCTURE MM 53.40 MOUNTAIN ROAD (SOUTHBOUND)

SHEET NUMBER: SP-04

CONTRACT: 2026.23

Filename: Plan_(Mountain Road MM 53.4).dgn

NOTES:

1. REMOVE EXISTING UNDERGROUND CONDUIT AND ASSOCIATED WIRING BETWEEN EXISTING CABINET, DISCONNECT LOCATED ON METER PEDESTAL, AND SERVICE POLE (INCIDENTAL TO CONTRACT).

2. REMOVE EXISTING UNDERGROUND CONDUITS AND ASSOCIATED WIRING BETWEEN EXISTING CABINET AND SIGN FOUNDATION (INCIDENTAL TO CONTRACT).

3. INSTALL TEMPORARY SOIL, EROSION, AND WATER POLLUTION CONTROLS PER MAINEDEP BEST MANAGEMENT PRACTICES, SUPPLEMENTAL SPECIFICATION 656, AND AS DIRECTED BY THE RESIDENT.

4. SERVICES FOR VMS SIGN:
   - COMMUNICATIONS = MTA RADIO NETWORK
   - POWER = CENTRAL MAINE POWER

APPROXIMATE ROW

TRIM TREE BRANCHES AS REQUIRED TO MAINTAIN A CLEAR LINE OF SIGHT BETWEEN POINT-TO-POINT RADIO AND ANTENNAS

APPROXIMATE ROW

NEW GROUND MOUNT CABINET LOCATION

1- 3" CONDUIT

EXISTING METER PEDESTAL TO BE REMOVED. FURNISH AND INSTALL NEW METER PEDESTAL COMPLETE WITH METER SOCKET WITH LEVER BYPASS AND 100-AMP DISCONNECT. COORDINATE METER INSTALLATION WITH THE SERVING ELECTRICAL UTILITY.

I-95 EXIT 7 NB ON

2- 3" CONDUITS

UG PON 3

EXISTING SERVICE POLE TO REMAIN. REMOVE AND REPLACE THE EXISTING SERVICE CONDUIT AND CONDUCTORS COMPLETELY

2- 3" CONDUITS

36"x24"x24" COMMUNICATION QUAZITE JUNCTION BOX

1- 2" CONDUIT

1- 2" CONDUIT

UNDERGROUND CONDUITS TO TRANSITION TO GALVANIZED RIGID METAL CONDUIT TO COME ABOVE GRADE. TRANSITION SHALL OCCUR AT THE TURN UP ELBOW. SEE TYPICAL CONDUIT PATH SIGN DETAIL.

EXISTING GROUND MOUNTED CABINET LOCATION: REMOVE EXISTING CABINET AND FOUNDATION COMPLETELY. REMOVE AND RESET EXISTING POINT-TO-POINT RADIO ANTENNA TO VMS SIGN STRUCTURE.

2- 3" CONDUITS

POINT-TO-POINT RADIO ANTENNA RELOCATED FROM EXISTING CABINET

18"x11"x18" ELECTRIC QUAZITE JUNCTION BOX

PROPOSED VARIABLE MESSAGE SIGN ON EXISTING STRUCTURE - SEE STRUCTURAL DRAWINGS FOR MORE DETAILS

INSTALL NEW CAMERA SUPPLIED BY MTA. COORDINATE CAMERA CONFIGURATION, ALIGNMENT, AND COMMISSIONING WITH THE MTA DIRECTOR OF ITS

SPUR ROAD

Date: 11/19/2026

Username: EHANDLEY

Scale: 10 0 10 20

1" = 10'

No.	Revision	By	Date

Designed by: HNTB

CONSULTANT PROJECT MANAGER: Daniel Bouchard, P.E.

	By	Date		By	Date
Designed	ETH	11/2026	Checked	DGB	11/2026
Drawn	ETH	11/2026	In Charge of	TRC	11/2026

HNTB CORPORATION
82 Running Hill Road, Suite 201
South Portland, ME 04106

TEL (207) 774-5155
FAX (207) 228-0909

MAINE TURNPIKE

THE GOLD STAR MEMORIAL HIGHWAY

MTA PROJECT MANAGER: Eric Barnes, P.E.

VARIABLE MESSAGE SIGN REPLACEMENT – VARIOUS LOCATIONS

YORK - EXIT 7 (SPUR RD)

SHEET NUMBER: SP-05

CONTRACT: 2026.23

Filename: Plan_(Exit7).dgn

NOTES:

1. REMOVE EXISTING UNDERGROUND CONDUIT AND ASSOCIATED WIRING BETWEEN EXISTING CABINET, DISCONNECT LOCATED ON METER PEDESTAL, AND SERVICE POLE (INCIDENTAL TO CONTRACT).

2. REMOVE EXISTING UNDERGROUND CONDUITS AND ASSOCIATED WIRING BETWEEN EXISTING CABINET AND SIGN FOUNDATION (INCIDENTAL TO CONTRACT).

3. INSTALL TEMPORARY SOIL, EROSION, AND WATER POLLUTION CONTROLS PER MAINEDEP BEST MANAGEMENT PRACTICES, SUPPLEMENTAL SPECIFICATION 656, AND AS DIRECTED BY THE RESIDENT.

4. SERVICES FOR VMS SIGN:
   - COMMUNICATIONS = MTA RADIO NETWORK
   - POWER = CENTRAL MAINE POWER

SANFORD ROAD (ROUTE 109)

EXISTING SERVICE POLE TO REMAIN. REMOVE AND REPLACE THE EXISTING SERVICE CONDUIT AND CONDUCTORS COMPLETELY

2- 3" CONDUITS

18"x11"x18" ELECTRIC QUAZITE JUNCTION BOX

2- 3" CONDUITS

EXISTING METER PEDESTAL TO BE REMOVED. FURNISH AND INSTALL NEW METER PEDESTAL COMPLETE WITH METER SOCKET WITH LEVER BYPASS AND 100-AMP DISCONNECT. COORDINATE METER INSTALLATION WITH THE SERVING ELECTRICAL UTILITY.

CONTRACTOR SHALL MAINTAIN OR REMOVE AND RESET THE EXISTING POINT-TO-POINT RADIO COMMUNICATION ANTENNA

PROPOSED VARIABLE MESSAGE SIGN ON EXISTING STRUCTURE - SEE STRUCTURAL DRAWINGS FOR MORE DETAILS

UNDERGROUND CONDUITS TO TRANSITION TO GALVANIZED RIGID METAL CONDUIT TO COME ABOVE GRADE. TRANSITION SHALL OCCUR AT THE TURN UP ELBOW. SEE TYPICAL CONDUIT SIGN DETAIL.

APPROXIMATE ROW

1- 3" CONDUIT

NEW GROUND MOUNTED CABINET LOCATION

EXISTING VMS CABINET LOCATION: REMOVE EXISTING GROUND MOUNTED CABINET AND FOUNDATION COMPLETELY.

2" CONDUITS

36"x24"x24" COMMUNICATION QUAZITE JUNCTION BOX

2 - 3" CONDUITS

GOLDBERG, STANLEY F - TRUSTEE
MAP 050 LOT 018
19432/0390

WELLS T.C. ACCESS ROAD

APPROXIMATE ROW

APPROXIMATE ROW

Date: 11/19/2026

Username: EHANDLEY

Scale: 10 0 10 20
1" = 10'

No.	Revision	By	Date

Designed by: HNTB

CONSULTANT PROJECT MANAGER: Daniel Bouchard, P.E.

	By	Date		By	Date
Designed	ETH	11/2026	Checked	DGB	11/2026
Drawn	ETH	11/2026	In Charge of	TRC	11/2026

HNTB CORPORATION
82 Running Hill Road, Suite 201
South Portland, ME 04106

TEL (207) 774-5155
FAX (207) 228-0909

MAINE TURNPIKE

THE GOLD STAR MEMORIAL HIGHWAY

MTA PROJECT MANAGER: Eric Barnes, P.E.

VARIABLE MESSAGE SIGN REPLACEMENT – VARIOUS LOCATIONS
WELLS - EXIT 19 (SANFORD ROAD) EASTBOUND

SHEET NUMBER: SP-06

CONTRACT: 2026.23

Filename: Plan_(Exit19).dgn

NOTES:

1. ELECTRICAL FEED FOR VMS FROM ADMINISTRATION TOLL BUILDING, PANEL "C", BREAKER 19 & 21 (2 POLE 100 AMP).

2. EXISTING TRAFFIC SIGNAL SHALL REMAIN OPERATIONAL AT ALL TIMES.

3. THE CONTRACTOR SHALL BE RESPONSIBLE FOR PROPER ORIENTATION OF THE VMS. THE HALF-INTENSITY VIEWING CONE IS 30° WIDE AND EXTENDS 15° ON EACH SIDE OF THE VMS AIMING AXIS. ONCE THE FINAL FOUNDATION LOCATION IS ESTABLISHED, THE CONTRACTOR SHALL SUBMIT A SKETCH SHOWING THE PROPOSED FOCAL POINT AND HALF-INTENSITY VIEWING CONE TO THE RESIDENT FOR APPROVAL. OBTAIN THE RESIDENT'S APPROVAL BEFORE PLACING THE FOUNDATION.

4. HAR SHALL REMAIN IN SERVICE THROUGHOUT CONSTRUCTION UNLESS OTHERWISE APPROVED BY MTA DIRECTOR OF ITS.

5. REMOVE EXISTING UNDERGROUND CONDUITS AND ASSOCIATED WIRE BETWEEN EXISTING CABINET AND SIGN FOUNDATION (INCIDENTAL TO CONTRACT).

6. MTA WILL MARK OUT COMMUNICATION AND ELECTRICAL FEED FROM EXISTING SIGNAL CABINET BACK TO ADMINISTRATION BUILDING. CONTRACTOR WILL BE RESPONSIBLE FOR CAPTURING GPS POINTS ON THE DIG SAFE MARKOUT AND PROVIDING TO MTA AS PART OF FINAL AS-BUILT PACKAGE.

7. CONTRACTOR SHALL PROVIDE A PORTABLE VMS MESSAGE SIGN DURING CONSTRUCTION AT ALL TIMES THE EXISTING VMS AT THIS LOCATION IS NOT OPERABLE. PORTABLE VMS MESSAGE SIGN SHALL BE CAPABLE OF BEING UPDATED REMOTELY BY THE MTA RADIO ROOM PER SPECIAL PROVISION 652. PORTABLE MESSAGE SIGN WILL BE PAID FOR UNDER ITEM 652.361 MAINTENANCE OF TRAFFIC CONTROL DEVICES.

8. INSTALL TEMPORARY SOIL, EROSION, AND WATER POLLUTION CONTROLS PER MAINEDEP BEST MANAGEMENT PRACTICES, SUPPLEMENTAL SPECIFICATION 656, AND AS DIRECTED BY THE RESIDENT.

9. FINAL SIGN LOCATION SHALL BE FIELD LOCATED BY CONTRACTOR AND APPROVED BY RESIDENT. FOUNDATION SHALL BE LOCATED BASED ON THE FOLLOWING CRITERIA:
   A. NEAREST EDGE OF FOUNDATION SHALL BE LOCATED MINIMUM OF 12 FEET FROM TRAVEL WAY
   B. NEAREST EDGE OF SIGN SHALL BE LOCATED A MINIMUM OF 6 FEET FROM EDGE OF SHOULDER. NEW SIGN IS WIDER THAN EXISTING SIGN, REFER TO DAKTRONICS SHOP DRAWINGS FOR DIMENSIONS.
   C. NEW FOUNDATION SHALL BE A MAXIMUM OF 5' FROM THE OLD FOUNDATION

10. SERVICES FOR VMS SIGN:
    - COMMUNICATIONS = FIBER FROM MTA TOLL PLAZA
    - POWER = MTA TOLL PLAZA, SEE NOTE 1

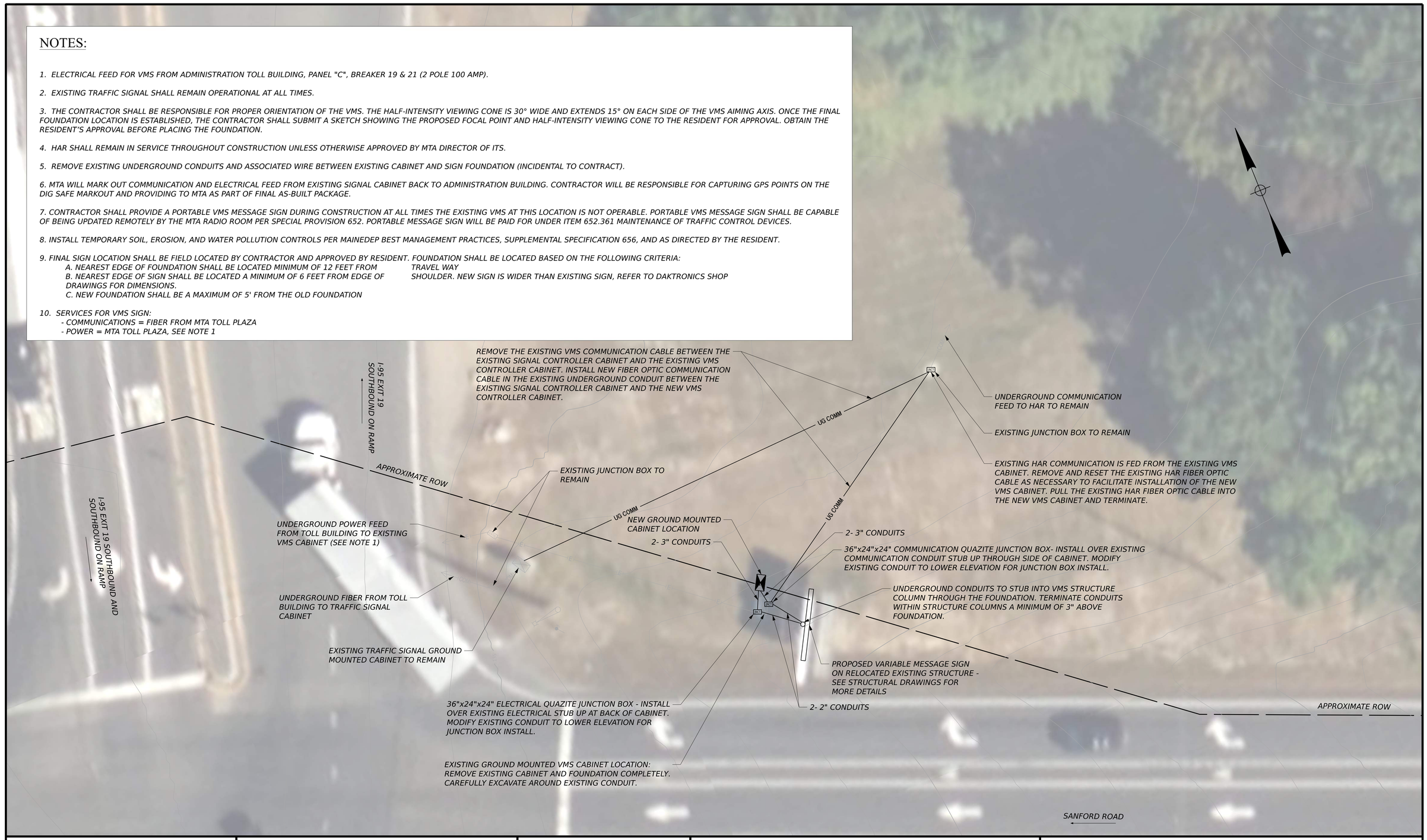

Date: 11/20/2026

Username: PMCKECHNIE

Scale: 10 0 10 20 — 1" = 10'

No.	Revision	By	Date

Designed by: HNTB

CONSULTANT PROJECT MANAGER: Daniel Bouchard, P.E.

	By	Date		By	Date
Designed	ETH	11/2026	Checked	DGB	11/2026
Drawn	ETH	11/2026	In Charge of	TRC	11/2026

HNTB CORPORATION
82 Running Hill Road, Suite 201
South Portland, ME 04106

TEL (207) 774-5155
FAX (207) 228-0909

MAINE TURNPIKE

THE GOLD STAR MEMORIAL HIGHWAY

MTA PROJECT MANAGER: Eric Barnes, P.E.

VARIABLE MESSAGE SIGN REPLACEMENT – VARIOUS LOCATIONS
WELLS - EXIT 19 (SANFORD ROAD) WESTBOUND

SHEET NUMBER: SP-07

CONTRACT: 2026.23

Filename: Plan_(Exit19).dgn

NOTES:

1. METER BASE SHALL BE INSTALLED PER KENNEBUNK LIGHT AND POWER DISTRICT STANDARDS.

2. ALL VEGETATION SHALL BE CLEARED AND GRUBBED FROM UNDERNEATH SIGN AND AROUND VMS CABINET FOLLOWED BY AN APPLICATION OF LOAM AND SEED. GRADE TO DRAIN.

3. HAR SHALL REMAIN IN SERVICE THROUGHOUT CONSTRUCTION UNLESS OTHERWISE APPROVED BY MTA DIRECTOR OF ITS. PROTECT ALL EQUIPMENT FROM DAMAGE.

4. REMOVE EXISTING UNDERGROUND CONDUIT AND ASSOCIATED WIRING BETWEEN EXISTING CABINET, DISCONNECT LOCATED ON METER PEDESTAL, AND SERVICE POLE (INCIDENTAL TO CONTRACT).

5. REMOVE EXISTING UNDERGROUND CONDUITS AND ASSOCIATED WIRING BETWEEN EXISTING CABINET AND SIGN FOUNDATION (INCIDENTAL TO CONTRACT).

6. INSTALL TEMPORARY SOIL, EROSION, AND WATER POLLUTION CONTROLS PER MAINEDEP BEST MANAGEMENT PRACTICES, SUPPLEMENTAL SPECIFICATION 656, AND AS DIRECTED BY THE RESIDENT.

7. SERVICES FOR VMS SIGN:
   - COMMUNICATIONS = MTA RADIO NETWORK
   - POWER = KENNEBUNK LIGHT AND POWER

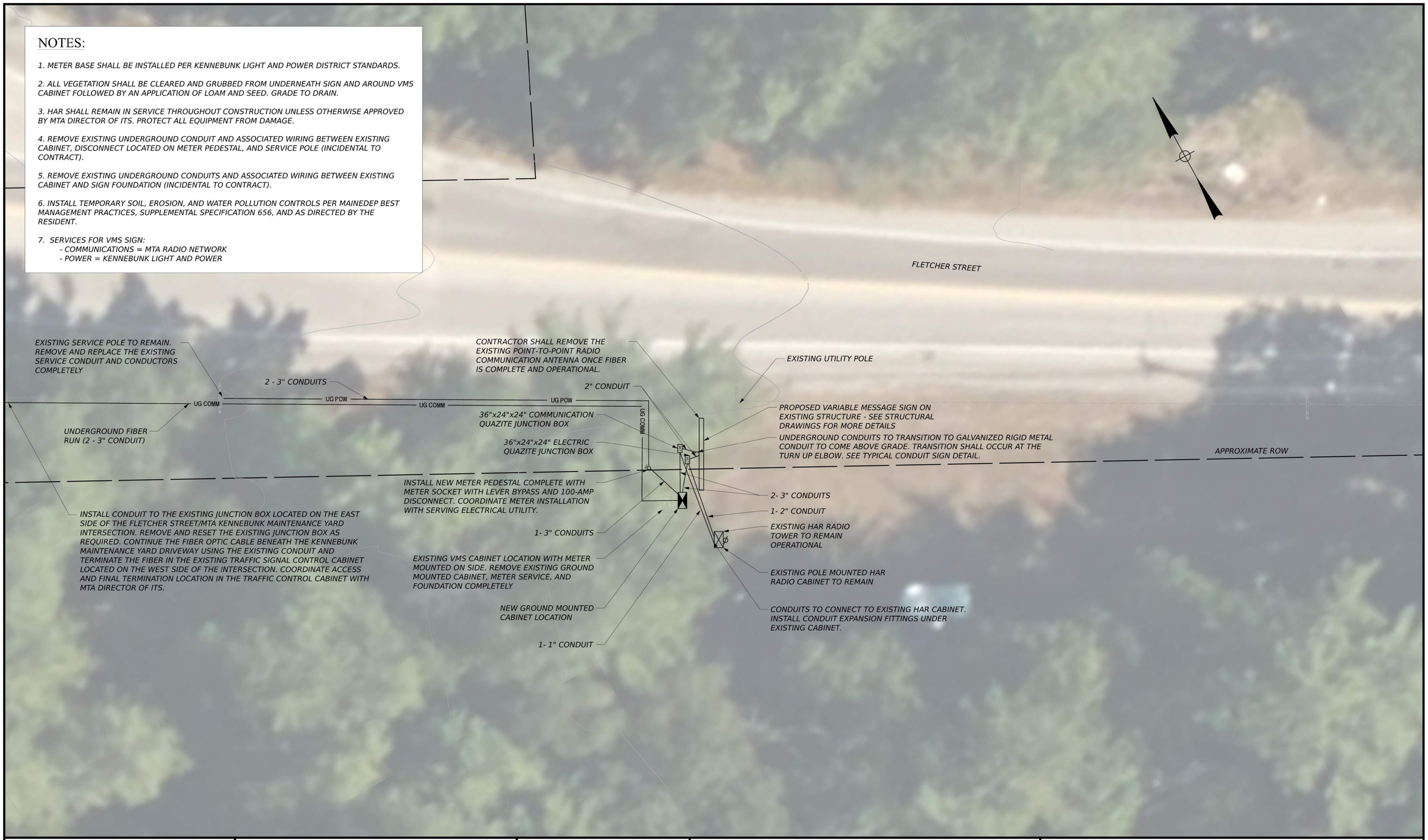

Date: 11/19/2026

Username: EHANDLEY

Scale: 10 0 10 20

1" = 10'

No.	Revision	By	Date

Designed by: HNTB

CONSULTANT PROJECT MANAGER: Daniel Bouchard, P.E.

	By	Date		By	Date
Designed	ETH	11/2026	Checked	DGB	11/2026
Drawn	ETH	11/2026	In Charge of	TRC	11/2026

HNTB CORPORATION
82 Running Hill Road, Suite 201
South Portland, ME 04106

TEL (207) 774-5155
FAX (207) 228-0909

MAINE TURNPIKE

THE GOLD STAR MEMORIAL HIGHWAY

MTA PROJECT MANAGER: Eric Barnes, P.E.

VARIABLE MESSAGE SIGN REPLACEMENT – VARIOUS LOCATIONS

KENNEBUNK - EXIT 25 (FLETCHER ST)

SHEET NUMBER: SP-08

CONTRACT: 2026.23

Filename: Plan_(Exit25).dgn

NOTES:

1. REMOVE EXISTING UNDERGROUND CONDUIT AND ASSOCIATED WIRING BETWEEN EXISTING CABINET, DISCONNECT LOCATED ON METER PEDESTAL, AND SERVICE POLE (INCIDENTAL TO CONTRACT).

2. REMOVE EXISTING UNDERGROUND CONDUITS AND ASSOCIATED WIRING BETWEEN EXISTING CABINET AND SIGN FOUNDATION (INCIDENTAL TO CONTRACT).

3. INSTALL TEMPORARY SOIL, EROSION, AND WATER POLLUTION CONTROLS PER MAINEDEP BEST MANAGEMENT PRACTICES, SUPPLEMENTAL SPECIFICATION 656, AND AS DIRECTED BY THE RESIDENT.

4. THIS SITE IS LOCATED IN A DESIGNATED STORMWATER MEADOW BUFFER. THE CONTRACTOR SHALL INSTALL EROSION CONTROL BARRIER ALONG THE WORK EDGE PRIOR TO THE COMMENCEMENT OF SITE WORK AND ALL DISTURBED GROUND SHALL BE LOAMED, SEEDED, AND MULCHED AS SOON AS POSSIBLE FOR REVEGETATION.

5. AERIAL IMAGE IS NOT THE CURRENT LANE CONFIGURATION FOR ROUTE 703.

6. SERVICES FOR VMS SIGN:
   - COMMUNICATIONS = MTA FIBER FEED FROM EXIT 45 NB ON-RAMP ADMINISTRATION BUILDING
   - POWER = CENTRAL MAINE POWER

APPROXIMATE ROW

EXISTING SERVICE POLE TO REMAIN. REMOVE AND REPLACE THE EXISTING SERVICE CONDUIT AND CONDUCTORS COMPLETELY.

NEW GROUND MOUNTED CABINET LOCATION

2- 3" CONDUITS

EXISTING METER PEDESTAL TO BE REMOVED. FURNISH AND INSTALL NEW METER PEDESTAL COMPLETE WITH METER SOCKET WITH LEVER BYPASS AND 100-AMP DISCONNECT. COORDINATE METER INSTALLATION WITH THE SERVING ELECTRICAL UTILITY.

2- 3" CONDUITS

18"x11"x18" ELECTRIC QUAZITE JUNCTION BOX

PROPOSED VARIABLE MESSAGE SIGN ON EXISTING STRUCTURE - SEE STRUCTURAL DRAWINGS FOR MORE DETAILS

2- 3" CONDUITS

36"x24"x24" COMMUNICATION QUAZITE JUNCTION BOX - INSTALL OVER EXISTING FIBER CONDUIT STUB UP. MODIFY EXISTING CONDUIT TO LOWER ELEVATION FOR JUNCTION BOX INSTALL. EXISTING 1 - 6 STRAND MULTI MODAL FIBER OPTIC CABLE FEED FROM EXIT 45 NB ON-RAMP ADMINISTRATION BUILDING. IF INSUFFICIENT SLACK IS AVAILABLE IN THE EXISTING FIBER OPTIC CABLE AT THE EXISTING VMS CABINET, JUNCTION BOXES, OR ADMINISTRATION BUILDING TO PULL A HOME RUN INTO THE NEW VMS CABINET, CONTACT THE MTA DIRECTOR OF ITS FOR DIRECTION.

INSTALL NEW CAMERA SUPPLIED BY MTA. COORDINATE CAMERA CONFIGURATION, ALIGNMENT, AND COMMISSIONING WITH THE MTA DIRECTOR OF ITS

EXISTING CABINET LOCATION: REMOVE EXISTING GROUND MOUNTED CABINET AND FOUNDATION COMPLETELY.

2" CONDUITS

UNDERGROUND CONDUITS TO TRANSITION TO GALVANIZED RIGID METAL CONDUIT TO COME ABOVE GRADE. TRANSITION SHALL OCCUR AT THE TURN UP ELBOW. SEE TYPICAL CONDUIT SIGN DETAIL.

ROUTE 703 WESTBOUND

Date: 11/19/2026

Username: EHANDLEY

Scale: 10 0 10 20

1" = 10'

No.	Revision	By	Date

Designed by: HNTB

CONSULTANT PROJECT MANAGER: Daniel Bouchard, P.E.

	By	Date		By	Date
Designed	ETH	11/2026	Checked	DGB	11/2026
Drawn	ETH	11/2026	In Charge of	TRC	11/2026

HNTB CORPORATION
82 Running Hill Road, Suite 201
South Portland, ME 04106

TEL (207) 774-5155
FAX (207) 228-0909

MAINE TURNPIKE

THE GOLD STAR MEMORIAL HIGHWAY

MTA PROJECT MANAGER: Eric Barnes, P.E.

VARIABLE MESSAGE SIGN REPLACEMENT – VARIOUS LOCATIONS
SOUTH PORTLAND - EXIT 45 (ROUTE 703 WESTBOUND)

SHEET NUMBER: SP-09

CONTRACT: 2026.23

Filename: Plan_(Exit45).dgn

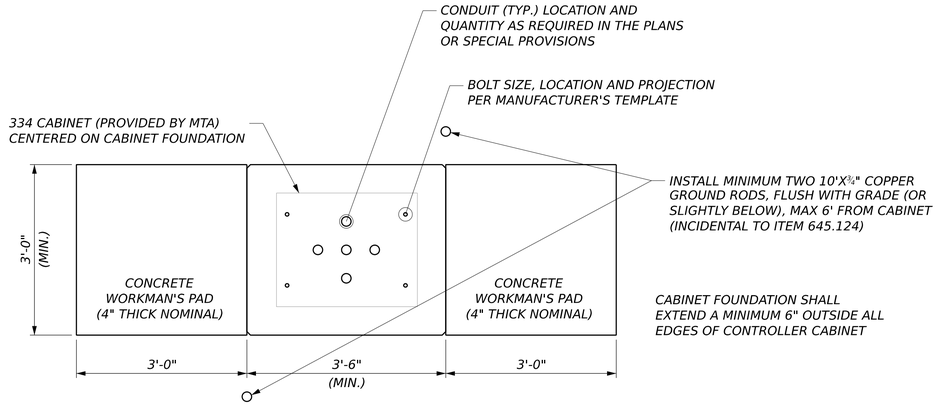

FOUNDATION PLAN

NOTES:

1. PAYMENT FOR INSTALLATION OF CONTROLLER CABINET, SHALL BE UNDER ITEMS 645.124X, SEE SPECIAL PROVISIONS.

2. PAYMENT FOR CONTROLLER CABINET FOUNDATION AND WORKMAN'S PADS SHALL BE UNDER ITEM 626.38.

3. WORKMAN'S PADS (AND CABINET DOORS) SHOULD BE ORIENTED AS SHOWN IN THE PLANS AND AS DIRECTED BY THE RESIDENT.

4. CONCRETE WORKMAN'S PAD SHALL HAVE #4 REINFORCING BARS AT 12" O.C. AT MID DEPTH IN BOTH DIRECTIONS, INCIDENTAL TO ITEM 626.38.

5. REINFORCING STEEL SCHEDULE SHALL BE SUBMITTED FOR APPROVAL FOR THE CABINET FOUNDATIONS. ALL REINFORCING STEEL SHALL BE INCIDENTAL TO ITEM 626.38.

6. ALL EXCAVATION FOR VMS CABINET FOUNDATION, INCLUDING ROCK EXCAVATION, STRUCTURAL EXCAVATION, GRANULAR BORROW, AND BACKFILL SHALL BE INCIDENTAL TO ITEM 626.38.

7. ALL GROUND ROD CONNECTIONS SHALL BE MADE USING CADWELD EXOTHERMIC WELDS.

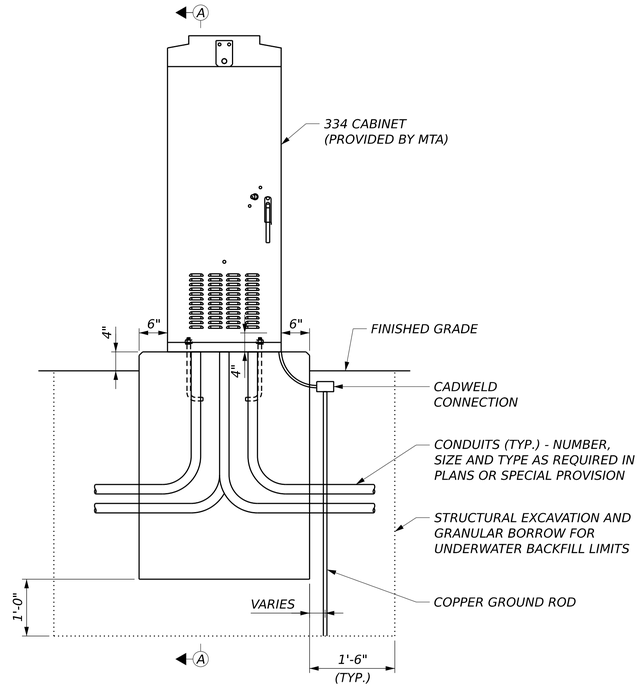

GROUND MOUNTED VMS CONTROLLER CABINET DETAIL

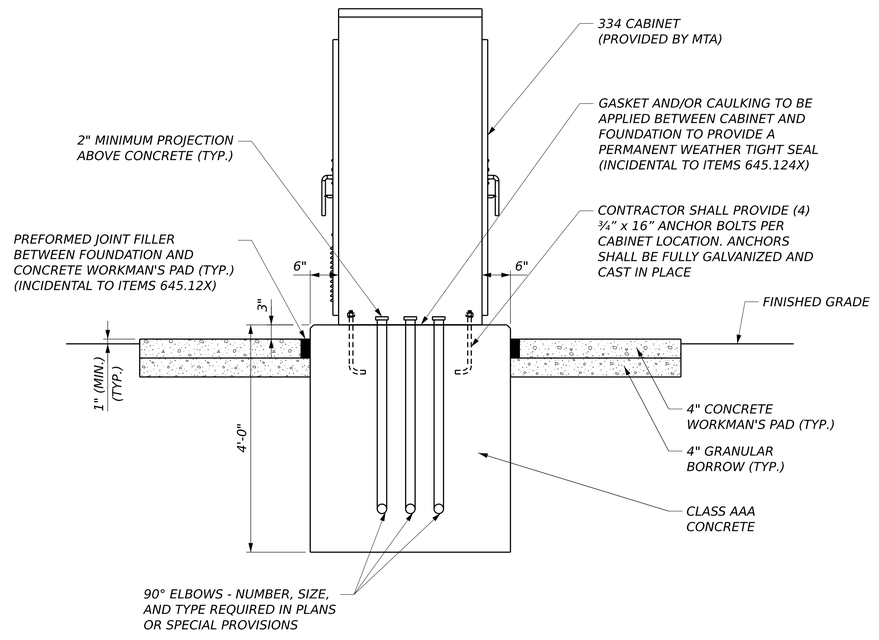

SECTION A-A

Username: EBEAUSOLEIL Date: 11/19/2026

Scale: 3/4" = 1'-0"

No.	Revision	By	Date

Designed by: HNTB

CONSULTANT PROJECT MANAGER: Daniel Bouchard, P.E.

	By	Date		By	Date
Designed	GLS	11/2026	Checked	BRG	11/2026
Drawn	ERB	11/2026	In Charge of	TRC	11/2026

HNTB CORPORATION
82 Running Hill Road, Suite 201
South Portland, ME 04106

TEL (207) 774-5155
FAX (207) 228-0909

MAINE TURNPIKE

THE GOLD STAR MEMORIAL HIGHWAY

MTA PROJECT MANAGER: Eric Barnes, P.E.

VARIABLE MESSAGE SIGN REPLACEMENT – VARIOUS LOCATIONS

VMS CABINET DETAIL

SHEET NUMBER: M-01

CONTRACT: 2026.23

Filename: z_Sign Structure Details.dgn

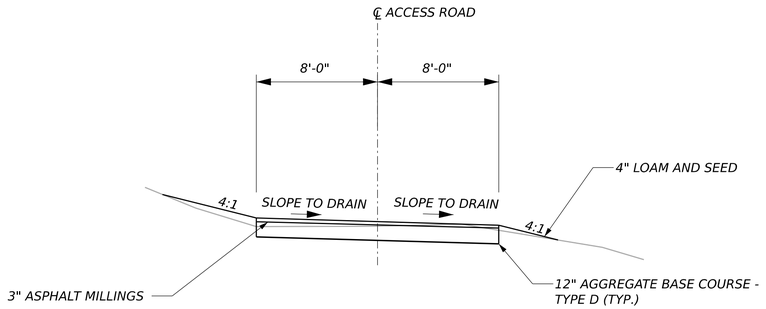

ACCESS ROAD TYPICAL SECTION

NOTES:

1. HORIZONTAL AND VERTICAL ALIGNMENT SHALL BE AS DIRECTED BY THE RESIDENT.

2. AGGREGATE BASE COURSE AND ASPHALT MILLINGS SHALL BE COMPACTED PER SPECIFICATION 203.

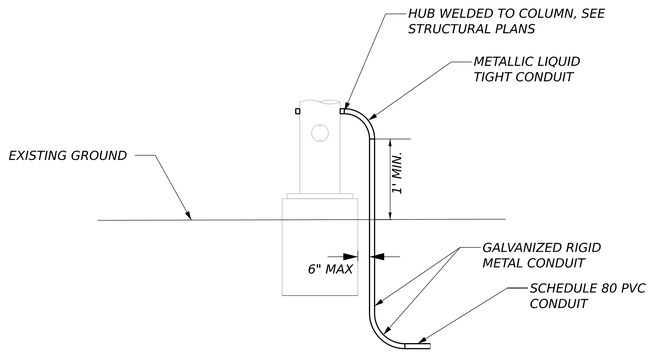

SIDE MOUNT TYPICAL CONDUIT TRANSITION DETAIL

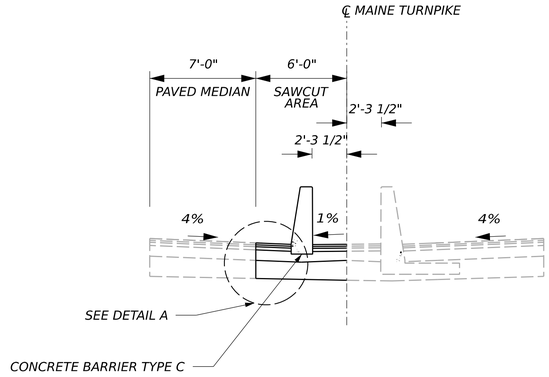

SAWCUT IN MEDIAN WITH CONCRETE BARRIER

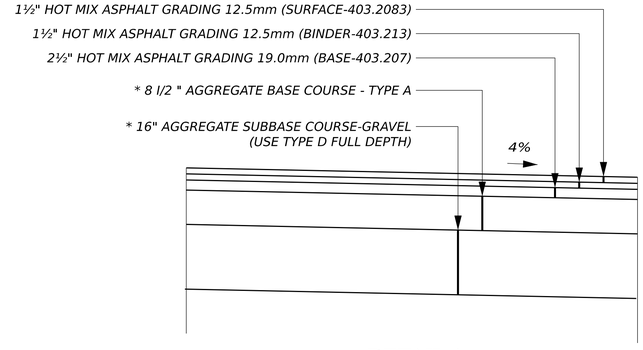

DETAIL A

* ONLY RECONSTRUCT TO A DEPTH REQUIRED TO INSTALL CONCRETE BARRIER

NOTE:

1. ALL SAWCUTTING, PAVEMENTS, TACK COAT, AND GRAVELS SHALL BE CONSIDERED INCIDENTAL TO THE CONCRETE BARRIER PAY ITEM.

Username: EHANDLEY
Date: 11/19/2026

Scale: NOT TO SCALE

No.	Revision	By	Date

Designed by: HNTB

CONSULTANT PROJECT MANAGER: Daniel Bouchard, P.E.

	By	Date		By	Date
Designed	ETH	11/2026	Checked	DGB	11/2026
Drawn	ETH	11/2026	In Charge of	TRC	11/2026

HNTB CORPORATION
82 Running Hill Road, Suite 201
South Portland, ME 04106

TEL (207) 774-5155
FAX (207) 228-0909

MAINE TURNPIKE

THE GOLD STAR MEMORIAL HIGHWAY

MTA PROJECT MANAGER: Eric Barnes, P.E.

VARIABLE MESSAGE SIGN REPLACEMENT – VARIOUS LOCATIONS
MISCELLANEOUS HIGHWAY DETAILS AND TYPICALS I

SHEET NUMBER: M-02

CONTRACT: 2026.23

Filename: Misc Typicals.dgn

DIMENSIONS FOR SLOPE OF 2:1

D	a (FT)	b (FT)	c (FT)	e (FT)	f (FT)	g (FT)	STONE DEPTH (FT)	STONE (CY)
12"	1.00	4.00	3.00	2.00	6.00	1.00	1.50	1.30
15"	1.00	4.50	3.37	2.25	6.75	1.63	1.50	1.70
18"	1.00	5.00	3.75	2.50	7.50	2.25	1.50	2.09
21"	1.00	5.50	4.13	2.75	8.25	2.88	1.50	2.58
24"	1.00	6.00	4.50	3.00	9.00	3.50	1.50	3.12
30"	1.00	7.00	5.25	3.50	10.50	4.75	1.50	4.33
36"	1.00	8.00	6.00	4.00	12.00	6.00	1.50	5.75
42"	1.00	9.00	6.75	4.50	13.50	7.25	1.50	7.37
48"	1.00	10.00	7.50	5.00	15.00	8.50	1.50	9.18
54"	1.00	11.00	8.25	5.50	16.50	9.75	1.50	11.19
60"	1.00	12.00	9.00	6.00	18.00	11.00	1.50	13.40
66"	1.00	13.00	9.75	6.50	19.50	12.25	1.50	15.81
72"	1.00	14.00	10.50	7.00	21.00	13.50	1.50	18.41
84"	1.00	16.00	12.00	8.00	24.00	16.00	1.50	24.22

DIMENSIONS FOR SLOPE OF 4:1

D	a (FT)	b (FT)	c (FT)	e (FT)	f (FT)	g (FT)	STONE DEPTH (FT)	STONE (CY)
12"	1.00	8.00	6.00	2.00	6.00	0.00	1.50	2.20
15"	1.00	9.00	6.75	2.25	6.75	0.00	1.50	2.80
18"	1.00	10.00	7.50	2.50	7.50	0.00	1.50	3.40
21"	1.00	11.00	8.25	2.75	8.25	0.00	1.50	4.10
24"	1.00	12.00	9.00	3.00	9.00	0.00	1.50	4.86
30"	1.00	14.00	10.50	3.50	10.50	0.00	1.50	6.58
36"	1.00	16.00	12.00	4.00	12.00	0.00	1.50	8.56
42"	1.00	18.00	13.50	4.50	13.50	0.50	1.50	10.92
48"	1.00	20.00	15.00	5.00	15.00	1.00	1.50	13.57
54"	1.00	22.00	16.50	5.50	16.50	1.50	1.50	16.50
60"	1.00	24.00	18.00	6.00	18.00	2.00	1.50	19.72
66"	1.00	26.00	19.50	6.50	19.50	2.50	1.50	23.22
72"	1.00	28.00	21.00	7.00	21.00	3.00	1.50	27.01
84"	1.00	32.00	24.00	8.00	24.00	4.00	1.50	35.45

DIMENSIONS FOR SLOPE OF 6:1

D	a (FT)	b (FT)	c (FT)	e (FT)	f (FT)	g (FT)	STONE DEPTH (FT)	STONE (CY)
12"	0.50	9.00	7.50	1.50	4.50	0.00	1.50	2.30
15"	0.50	10.50	8.75	1.75	5.50	0.00	1.50	2.93
18"	0.50	12.00	10.00	2.00	6.50	0.00	1.50	3.57
21"	0.50	13.50	11.25	2.25	7.25	0.00	1.50	4.46
24"	0.50	15.00	12.50	2.50	8.00	0.00	1.50	5.44
30"	0.50	18.00	15.00	3.00	9.50	0.00	1.50	7.71
36"	0.50	21.00	17.50	3.50	11.00	0.00	1.50	10.37
42"	0.50	24.00	20.00	4.00	12.50	0.00	1.50	13.42
48"	0.50	27.00	22.50	4.50	14.00	0.00	1.50	16.87
54"	0.50	30.00	25.00	5.00	15.50	0.00	1.50	20.70
60"	0.50	33.00	27.50	5.50	17.00	0.00	1.50	24.93
66"	0.50	36.00	30.00	6.00	18.50	0.00	1.50	29.55
72"	0.50	39.00	32.50	6.50	20.00	0.00	1.50	34.56
84"	0.50	45.00	37.50	7.50	23.00	0.00	1.50	45.76

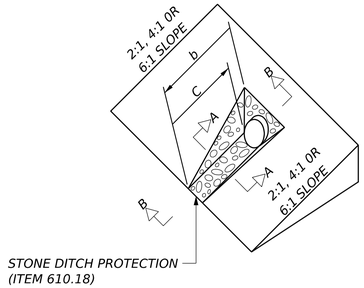

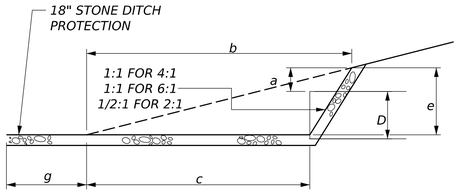

SECTION B-B

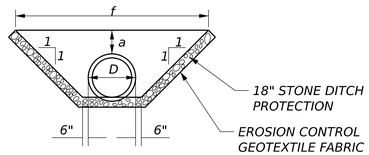

SECTION A-A

ROADWAY CULVERT ENDSLOPE TREATMENT

NOTE:

1. THE DIMENSIONS SHOWN ARE APPROXIMATE AND MAY BE MODIFIED BY THE RESIDENT.
2. STONE QUANTITIES ARE FOR ONE END OF THE PIPE.

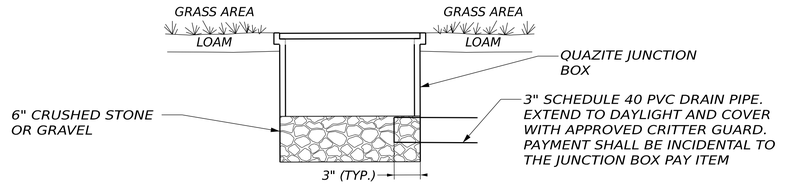

JUNCTION BOX COVER & FRAME

NOTE:

1. INSTALL JUNCTION BOXES ON GRADE.

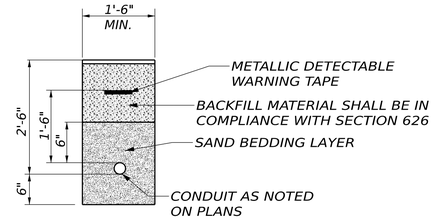

TRENCH CROSS SECTION

Date: 11/19/2026

Username: EHANDLEY

Scale: NOT TO SCALE

No.	Revision	By	Date

Designed by: HNTB

CONSULTANT PROJECT MANAGER: Daniel Bouchard, P.E.

	By	Date		By	Date
Designed	ETH	11/2026	Checked	DGB	11/2026
Drawn	ETH	11/2026	In Charge of	TRC	11/2026

HNTB CORPORATION
82 Running Hill Road, Suite 201
South Portland, ME 04106

TEL (207) 774-5155
FAX (207) 228-0909

MAINE TURNPIKE

THE GOLD STAR MEMORIAL HIGHWAY

MTA PROJECT MANAGER: Eric Barnes, P.E.

VARIABLE MESSAGE SIGN REPLACEMENT – VARIOUS LOCATIONS
MISCELLANEOUS HIGHWAY DETAILS AND TYPICALS II

SHEET NUMBER: M-03

CONTRACT: 2026.23

Filename: Misc Typicals.dgn

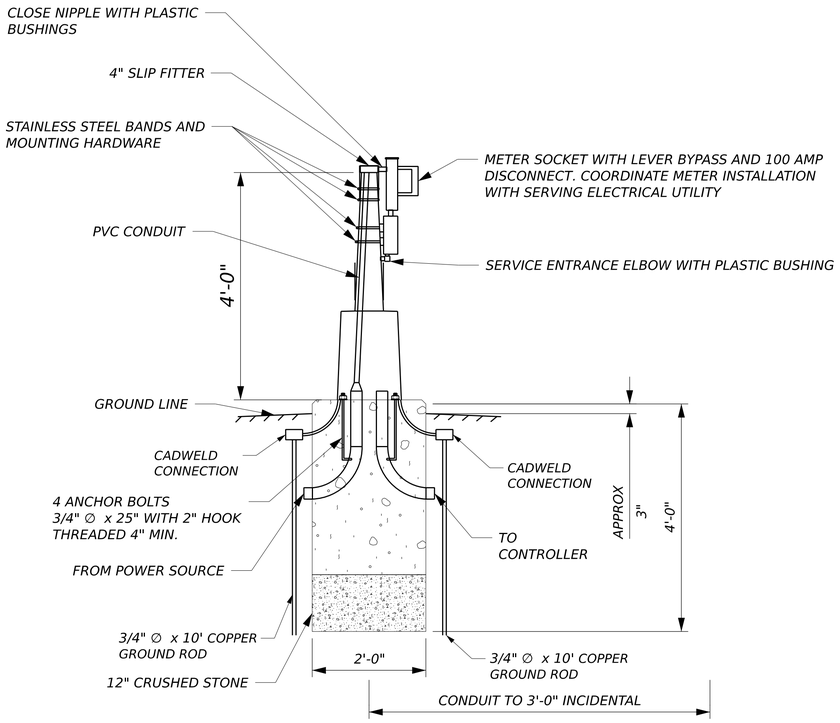

TRAFFIC SIGNAL METER PEDESTAL AND FOUNDATION

METER PEDESTAL NOTES:

1. ALL GROUND ROD CONNECTIONS SHALL BE MADE USING CADWELD EXOTHERMIC WELDS.

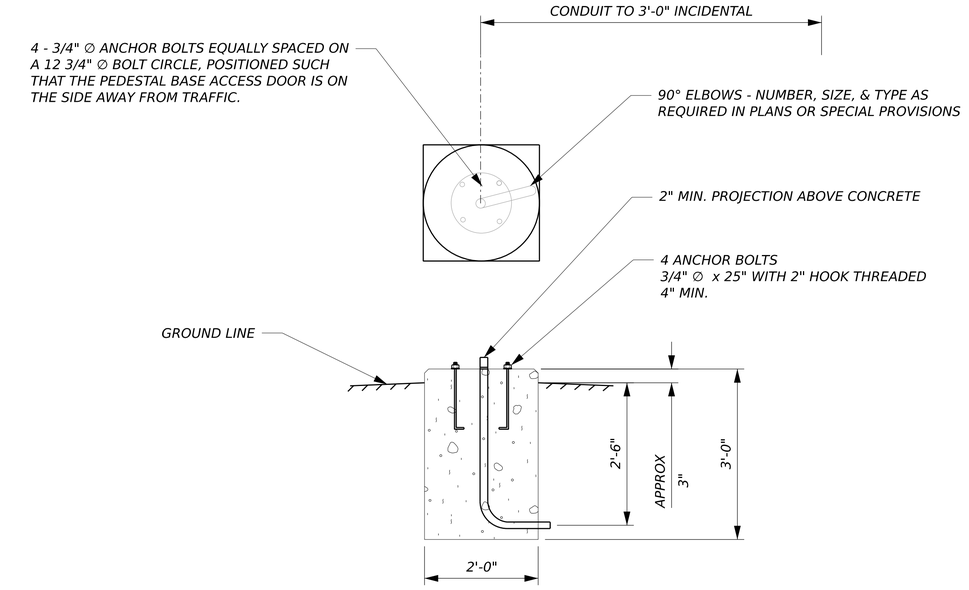

CONCRETE FOUNDATION FOR PEDESTALS

FOUNDATION NOTES:

1. ALL EXPOSED EDGES SHALL BE CHAMFERED 3/4".
2. OPEN ENDS OF ALL CONDUITS INTO FOUNDATION SHALL BE CAPPED UNTIL CABLES ARE INSTALLED.
3. ALL CONDUIT ENDS SHALL BE SEALED AFTER CABLES ARE INSTALLED.

Date: 11/19/2026

Username: EHANDLEY

Scale: NOT TO SCALE

No.	Revision	By	Date

Designed by: HNTB

CONSULTANT PROJECT MANAGER: Daniel Bouchard, P.E.

	By	Date		By	Date
Designed	ETH	10/2026	Checked	DGB	10/2026
Drawn	ETH	10/2026	In Charge of	TRC	10/2026

HNTB CORPORATION
82 Running Hill Road, Suite 201
South Portland, ME 04106

TEL (207) 774-5155
FAX (207) 228-0909

MAINE TURNPIKE

THE GOLD STAR MEMORIAL HIGHWAY

MTA PROJECT MANAGER: Eric Barnes, P.E.

VARIABLE MESSAGE SIGN REPLACEMENT – VARIOUS LOCATIONS

METER PEDESTAL DETAILS

SHEET NUMBER: M-04

CONTRACT: 2026.23

Filename: Meter Pedestal Details.dgn

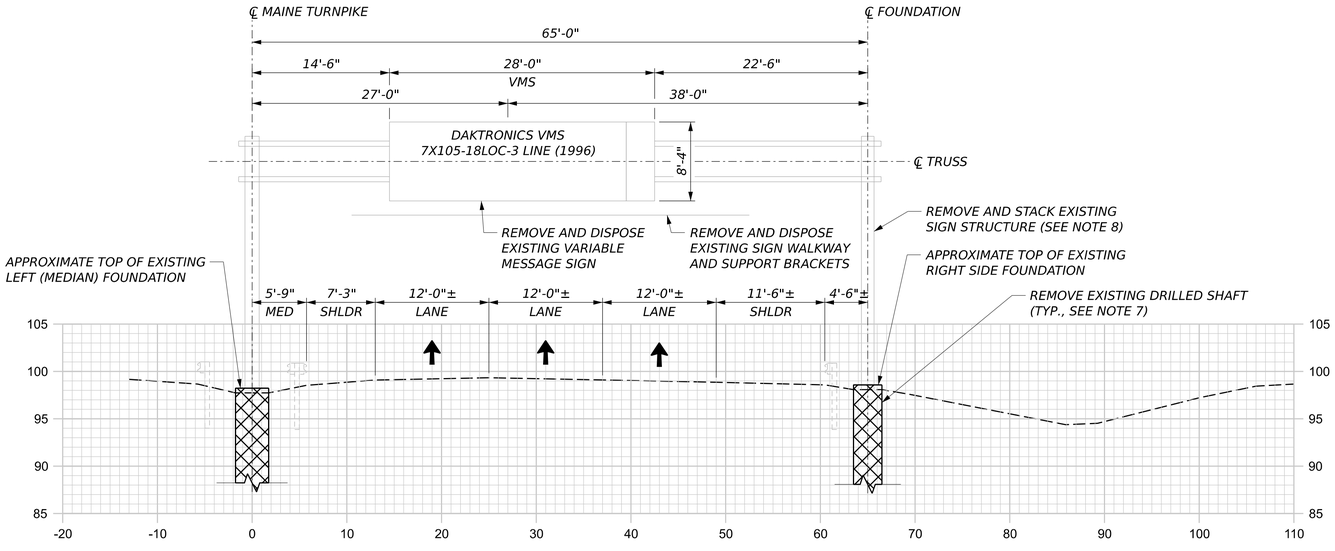

EXISTING OHSS I-95 MM 6.20 NB
CIDER HILL ROAD VMS

(LOOKING UPSTATION)

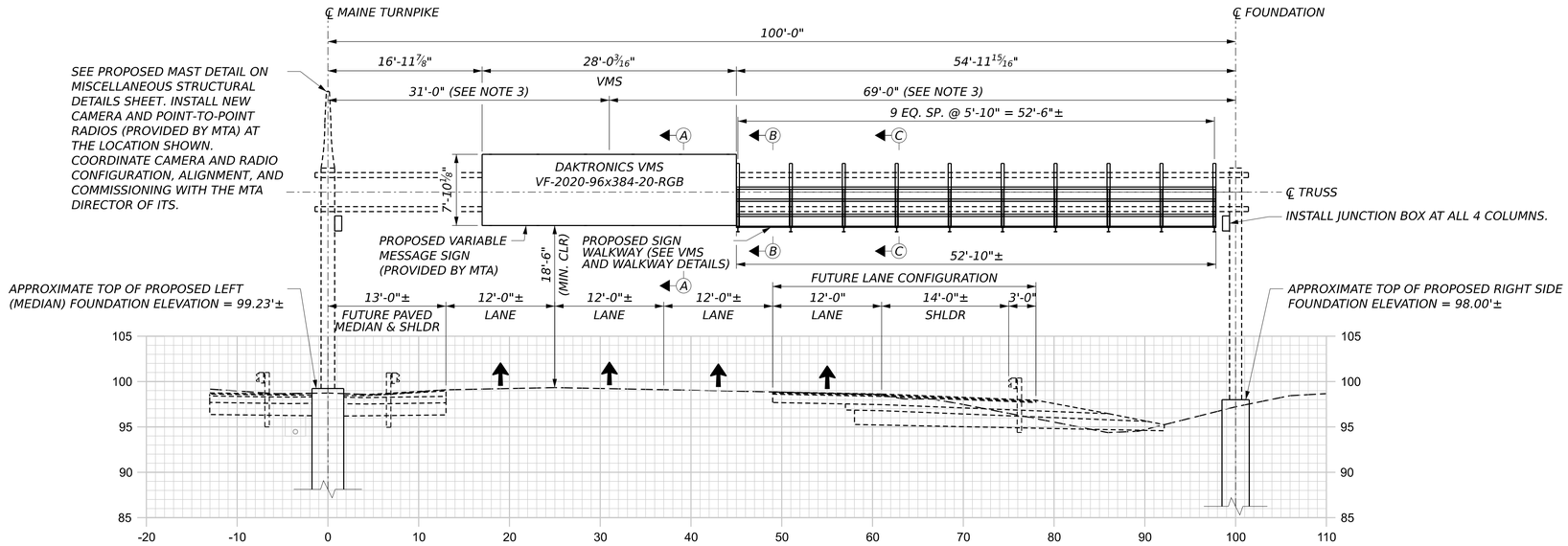

PROPOSED OHSS I-95 MM 6.20 NB
CIDER HILL ROAD VMS

(LOOKING UPSTATION)
(ASSUMED FUTURE ROADWAY SHOWN FOR INFORMATIONAL PURPOSES ONLY)

NOTES:

1. CONTRACTOR SHALL BE RESPONSIBLE FOR SURVEYING THE EXISTING ROADWAY, MEDIAN AND FOUNDATION LOCATIONS TO VERIFY ELEVATIONS BEFORE DEVELOPING STRUCTURAL SHOP DRAWINGS FOR FABRICATION AND CONSTRUCTING THE FOOTING. IF THE ACTUAL GROUND ELEVATIONS DIFFER MORE THAN 1'-0", THE ENGINEER SHALL BE CONTACTED TO VERIFY THE ADEQUACY OF THE FOUNDATION DESIGN.

2. THE OVERHEAD SIGN STRUCTURE SHALL BE DESIGNED FOR AN INCREASED SIGN AREA AS DESCRIBED IN SPECIAL PROVISION 645.

3. PROPOSED VMS SHALL BE CENTERED ABOVE THE EXISTING CENTER TRAVEL LANE.

4. SEE VMS AND WALKWAY DETAILS FOR SECTION A-A, B-B and C-C. W6x9 SIGN AND WALKWAY SUPPORT HORIZONTAL SPACING MAY BE ADJUSTED ± 6" TO AVOID TRUSS LATTICE BRACING.

5. CONTRACTOR SHALL SUBMIT SIGN BRACKET AND WALKWAY FABRICATION DETAILS TO MTA FOR REVIEW AND ACCEPTANCE PRIOR TO FABRICATION AND SHOULD GENERALLY FOLLOW THE DETAILS SHOWN IN THESE PLANS.

6. WALKWAY GRATING SHALL HAVE A SERRATED SURFACE.

7. EXISTING CONCRETE DRILLED SHAFTS ARE ENCASED IN STEEL PIPE; THE DEPTH OF THE STEEL CASING IS UNKNOWN. THE CONTRACTOR SHALL REMOVE THE EXISTING CONCRETE DRILLED SHAFTS AND ASSOCIATED STEEL CASINGS TO A MINIMUM DEPTH OF 5'-0" BELOW FINISHED GRADE.

8. EXISTING SIGN SUPPORT STRUCTURE (COLUMNS AND TRUSS) SHALL BE REMOVED AND DELIVERED TO THE MTA SIGN SHOP LOCATED AT MM 58.3 NORTHBOUND. CARE SHALL BE TAKEN TO AVOID DAMAGE TO THE EXISTING STRUCTURE DURING REMOVAL AND TRANSPORT OPERATIONS. THE CONTRACTOR SHALL COORDINATE THE DELIVERY DATE AND TIME WITH THE RESIDENT. CONTRACTOR SHALL BE RESPONSIBLE FOR UNLOADING OF MATERIALS AT THE SIGN SHOP.

9. ALL PROPOSED OVERHEAD SIGN STRUCTURES BASEPLATES SHALL HAVE A MINIMUM OF A 6" OPENING FOR ELECTRICAL AND/OR COMMUNICATION UTILITIES AND ALL COLUMNS SHALL HAVE HANDHOLES LOCATED APPROXIMATELY 2'-0" ABOVE BASE AND 1'-0" BELOW THE LOWER CHORD OF THE TRUSS. SEE FOUNDATION DETAILS.

10. ALL CONDUIT, CONDUIT BODIES, FLEXIBLE CONDUIT, FITTINGS, CONNECTORS, AND ASSOCIATED MATERIALS AND APPURTENANCES REQUIRED FOR A COMPLETE AND OPERATIONAL INSTALLATION OF THE VMS SIGN, CAMERA, AND POINT-TO-POINT RADIO COMPONENTS SHALL BE INCIDENTAL TO THE VMS STRUCTURE PAY ITEM AND WILL NOT BE MEASURED OR PAID FOR SEPARATELY. THE CONDUIT IS CONSIDERED INCIDENTAL EXTENDING TO 5 FEET BEYOND THE OUTSIDE LIMITS OF THE STRUCTURE FOUNDATIONS.

11. FOR LOCAL DATUM BENCHMARK LOCATIONS AND ELEVATIONS FOR FOUNDATION LAYOUTS, SEE HIGHWAY SITE PLANS.

Date: 11/19/2026
Username: EBEAUSOLEIL

Scale: 1/8" = 1'-0"

No.	Revision	By	Date

Designed by: HNTB

CONSULTANT PROJECT MANAGER: Daniel Bouchard, P.E.

	By	Date		By	Date
Designed	GLS	11/2026	Checked	BRG	11/2026
Drawn	ERB	11/2026	In Charge of	TRC	11/2026

HNTB CORPORATION
82 Running Hill Road, Suite 201
South Portland, ME 04106

TEL (207) 774-5155
FAX (207) 228-0909

MAINE TURNPIKE

THE GOLD STAR MEMORIAL HIGHWAY

MTA PROJECT MANAGER: Eric Barnes, P.E.

VARIABLE MESSAGE SIGN REPLACEMENT – VARIOUS LOCATIONS
OVERHEAD SIGN STRUCTURE MM 6.20 CIDER HILL ROAD (NORTHBOUND)

SHEET NUMBER: S-01

CONTRACT: 2026.23

Filename: z_Sign Structure Layout.dgn

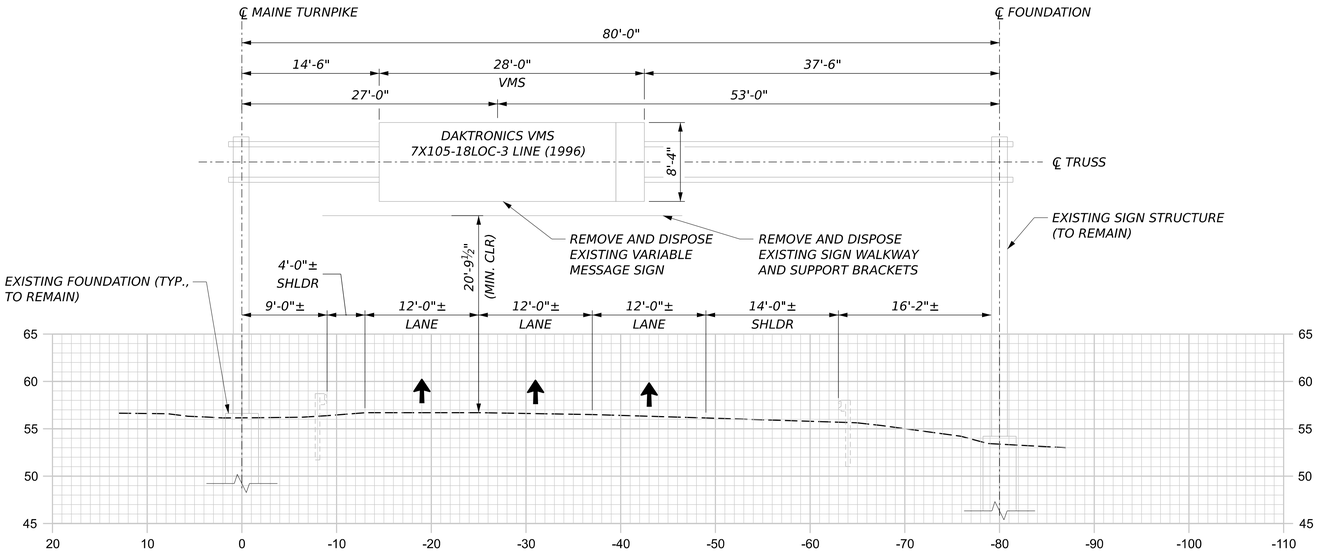

EXISTING OHSS I-95 MM 28.30 SB
LIMERICK ROAD VMS

(LOOKING DOWNSTATION)

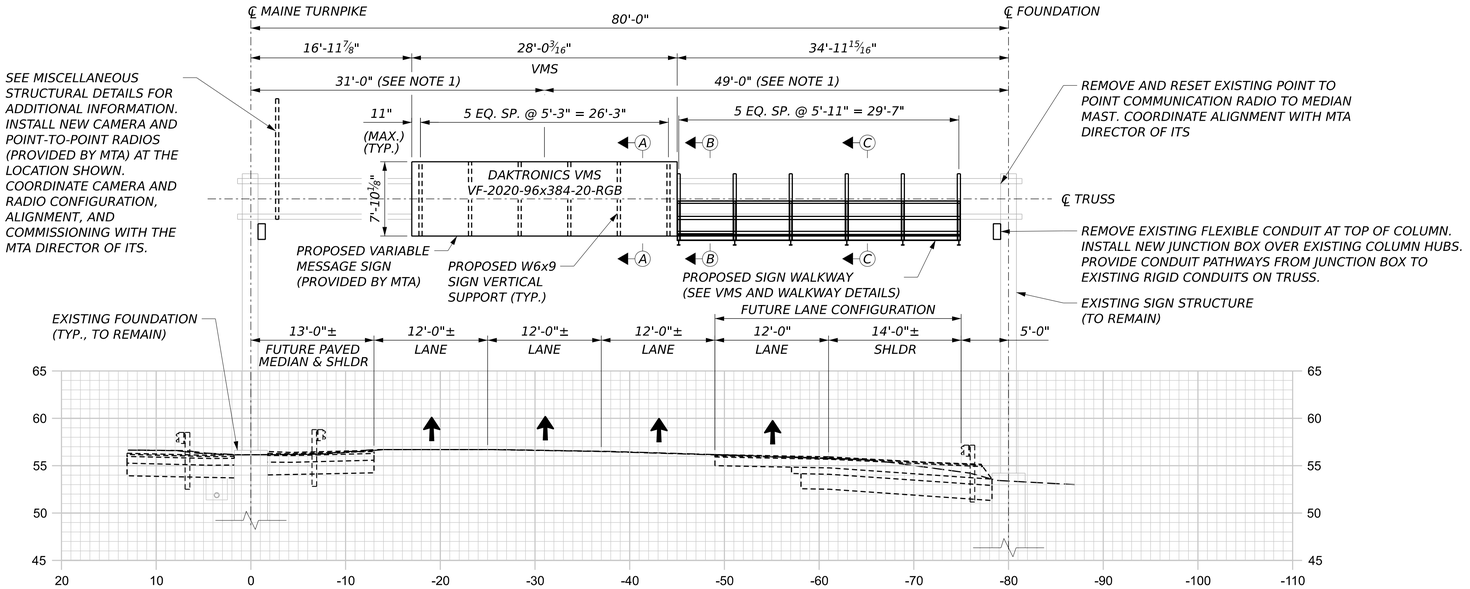

PROPOSED OHSS I-95 MM 28.30 SB
LIMERICK ROAD VMS

(LOOKING DOWNSTATION)
(ASSUMED FUTURE ROADWAY SHOWN FOR INFORMATIONAL PURPOSES ONLY)

NOTES:

1. *PROPOSED VMS SHALL BE CENTERED ABOVE THE EXISTING CENTER TRAVEL LANE.*

2. *SEE VMS AND WALKWAY DETAILS FOR SECTION A-A, B-B and C-C. W6x9 SIGN AND WALKWAY SUPPORT HORIZONTAL SPACING MAY BE ADJUSTED ± 6" TO AVOID TRUSS LATTICE BRACING.*

3. *CONTRACTOR SHALL VERIFY DISTANCE FROM TOP OF ROADWAY TO BOTTOM CHORD AND ADJUST DISTANCES AS REQUIRED TO MEET A MINIMUM CLEARANCE OF 18'-0". CONTRACTOR SHALL SUBMIT FIELD MEASUREMENTS TO THE RESIDENT FOR REVIEW.*

4. *CONTRACTOR SHALL SUBMIT SIGN BRACKET AND WALKWAY FABRICATION DETAILS TO MTA FOR REVIEW AND ACCEPTANCE PRIOR TO FABRICATION.*

5. *WALKWAY GRATING SHALL HAVE A SERRATED SURFACE.*

6. *ALL CONDUIT, CONDUIT BODIES, FLEXIBLE CONDUIT, FITTINGS, CONNECTORS, AND ASSOCIATED MATERIALS AND APPURTENANCES REQUIRED FOR A COMPLETE AND OPERATIONAL INSTALLATION OF THE VMS SIGN, CAMERA, AND POINT-TO-POINT RADIO COMPONENTS SHALL BE INCIDENTAL TO THE VMS STRUCTURE PAY ITEM AND WILL NOT BE MEASURED OR PAID FOR SEPARATELY. THE CONDUIT IS CONSIDERED INCIDENTAL EXTENDING TO 5 FEET BEYOND THE OUTSIDE LIMITS OF THE STRUCTURE FOUNDATIONS.*

7. *EXISTING GALVANIZED RIGID METAL CONDUIT (GRMC) MOUNTED ON THE SIGN STRUCTURE MAY REMAIN IN PLACE AND BE REUSED WHERE SUITABLE. MODIFY AND/OR EXTEND EXISTING CONDUIT AS NECESSARY TO ACCOMMODATE THE NEW VMS, MEDIAN CAMERA, AND ASSOCIATED EQUIPMENT. PROVIDE ALL FITTINGS, SUPPORTS, AND MATERIALS REQUIRED FOR A COMPLETE AND OPERATIONAL INSTALLATION.*

8. *FOR LOCAL DATUM BENCHMARK LOCATIONS AND ELEVATIONS FOR FOUNDATION LAYOUTS, SEE HIGHWAY SITE PLANS.*

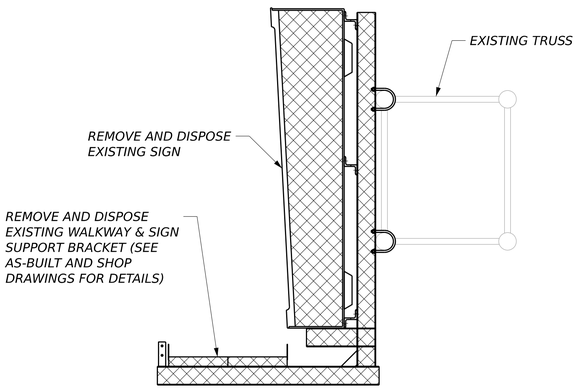

EXISTING VMS AND TRUSS SECTION

NOT TO SCALE

Date: 11/19/2026
Username: EBEAUSOLEIL

Scale: 1/8" = 1'-0"

No.	Revision	By	Date

Designed by: HNTB

CONSULTANT PROJECT MANAGER: Daniel Bouchard, P.E.

	By	Date		By	Date
Designed	GLS	11/2026	Checked	BRG	11/2026
Drawn	ERB	11/2026	In Charge of	TRC	11/2026

HNTB CORPORATION
82 Running Hill Road, Suite 201
South Portland, ME 04106

TEL (207) 774-5155
FAX (207) 228-0909

MAINE TURNPIKE

THE GOLD STAR MEMORIAL HIGHWAY

MTA PROJECT MANAGER: Eric Barnes, P.E.

VARIABLE MESSAGE SIGN REPLACEMENT – VARIOUS LOCATIONS
OVERHEAD SIGN STRUCTURE MM 28.30 LIMERICK ROAD (SOUTHBOUND)

SHEET NUMBER: S-02

CONTRACT: 2026.23

Filename: z_Sign Structure Layout.dgn

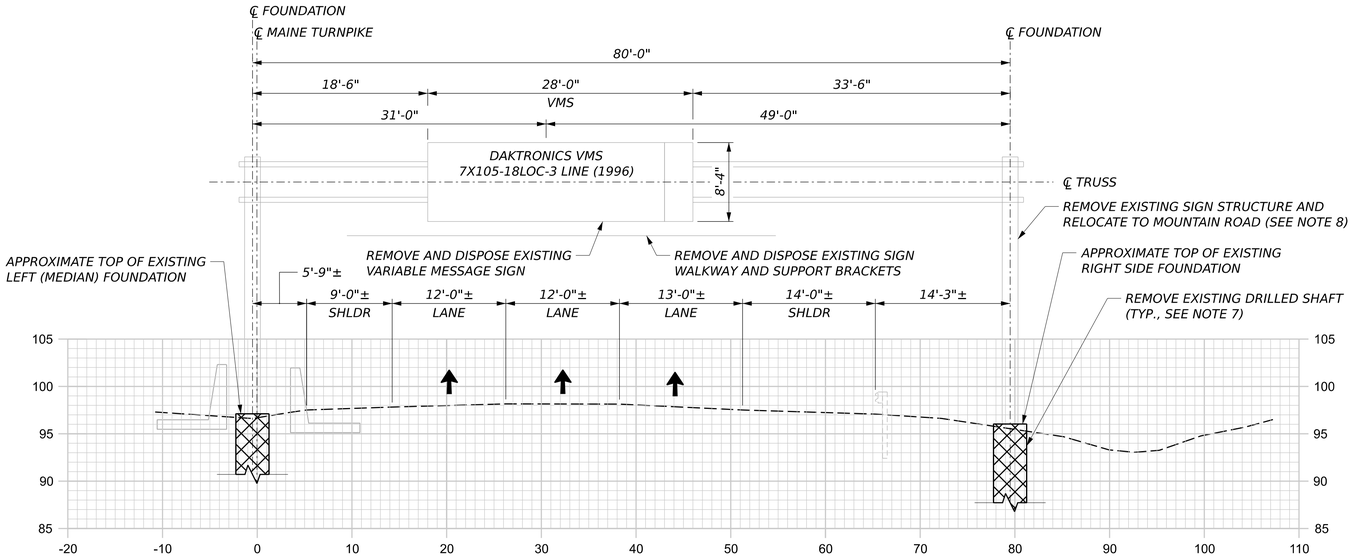

EXISTING OHSS I-95 MM 43.00 NB
HOLMES ROAD VMS

(LOOKING UPSTATION)

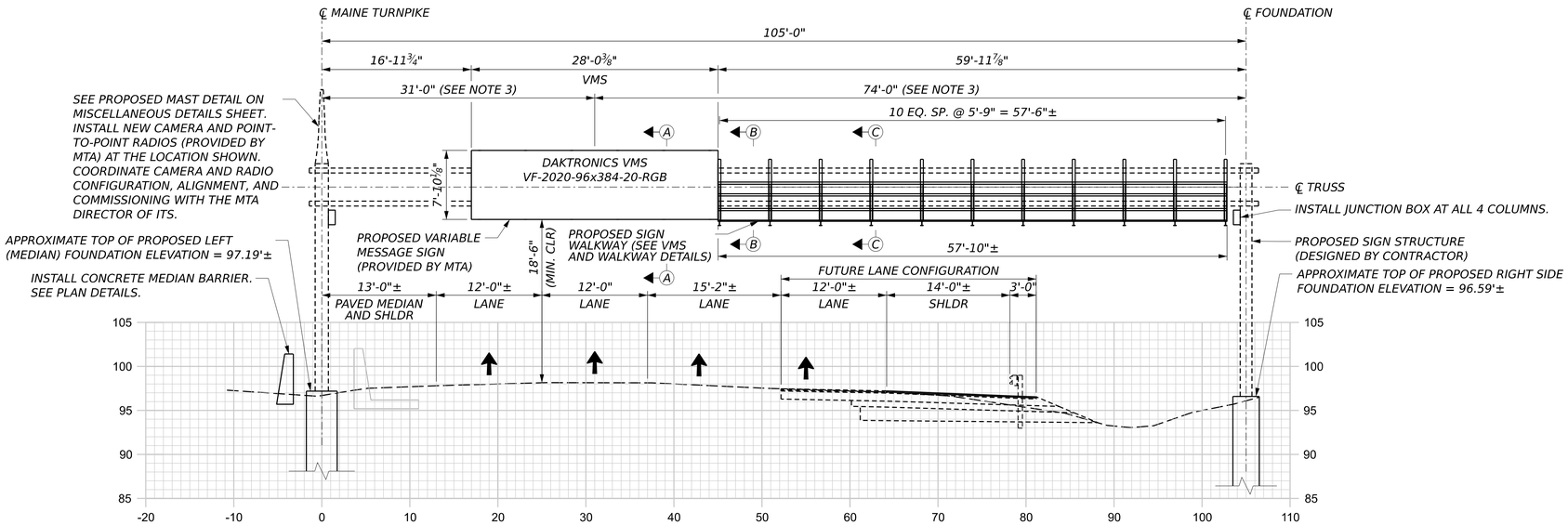

PROPOSED OHSS I-95 MM 43.00 NB
HOLMES ROAD VMS

(LOOKING UPSTATION)
(ASSUMED FUTURE ROADWAY SHOWN FOR INFORMATIONAL PURPOSES ONLY)

NOTES:

1. CONTRACTOR SHALL BE RESPONSIBLE FOR SURVEYING THE EXISTING ROADWAY, MEDIAN AND FOUNDATION LOCATIONS TO VERIFY ELEVATIONS BEFORE DEVELOPING STRUCTURAL SHOP DRAWINGS FOR FABRICATION AND CONSTRUCTING THE FOOTING. IF THE ACTUAL GROUND ELEVATIONS DIFFER MORE THAN 1'-0", THE ENGINEER SHALL BE CONTACTED TO VERIFY THE ADEQUACY OF THE FOUNDATION DESIGN.

2. THE OVERHEAD SIGN STRUCTURE SHALL BE DESIGNED FOR AN INCREASED SIGN AREA AS DESCRIBED IN SPECIAL PROVISION 645.

3. PROPOSED VMS SHALL BE CENTERED ABOVE THE EXISTING CENTER TRAVEL LANE.

4. SEE VMS AND WALKWAY DETAILS FOR SECTION A-A, B-B and C-C. W6x9 SIGN AND WALKWAY SUPPORT HORIZONTAL SPACING MAY BE ADJUSTED ± 6" TO AVOID TRUSS LATTICE BRACING.

5. CONTRACTOR SHALL SUBMIT SIGN BRACKET AND WALKWAY FABRICATION DETAILS TO MTA FOR REVIEW AND ACCEPTANCE PRIOR TO FABRICATION AND SHOULD GENERALLY FOLLOW THE DETAILS SHOWN IN THESE PLANS.

6. WALKWAY GRATING SHALL HAVE A SERRATED SURFACE.

7. EXISTING CONCRETE DRILLED SHAFTS ARE ENCASED IN STEEL PIPE; THE DEPTH OF THE STEEL CASING IS UNKNOWN. THE CONTRACTOR SHALL REMOVE THE EXISTING CONCRETE DRILLED SHAFTS AND ASSOCIATED STEEL CASINGS TO A MINIMUM DEPTH OF 5'-0" BELOW FINISHED GRADE.

8. EXISTING SIGN SUPPORT STRUCTURE (COLUMNS AND TRUSS) SHALL BE REMOVED, DELIVERED, AND INSTALLED ON NEW FOUNDATIONS AT MM 53.4 MOUNTAIN ROAD (SOUTHBOUND). CARE SHALL BE TAKEN TO AVOID DAMAGE TO THE EXISTING STRUCTURE DURING REMOVAL AND TRANSPORT OPERATIONS. THE CONTRACTOR SHALL COORDINATE THE DELIVERY DATE AND TIME WITH THE RESIDENT. CONTRACTOR SHALL BE RESPONSIBLE FOR STORING, UNLOADING, AND REINSTALLATION AT MOUNTAIN ROAD.

9. ALL PROPOSED OVERHEAD SIGN STRUCTURES BASEPLATES SHALL HAVE A MINIMUM OF A 6" OPENING FOR ELECTRICAL AND/OR COMMUNICATION UTILITIES AND ALL COLUMNS SHALL HAVE HANDHOLES LOCATED APPROXIMATELY 2'-0" ABOVE BASE AND 1'-0" BELOW THE LOWER CHORD OF THE TRUSS. SEE FOUNDATION DETAILS.

10. ALL CONDUIT, CONDUIT BODIES, FLEXIBLE CONDUIT, FITTINGS, CONNECTORS, AND ASSOCIATED MATERIALS AND APPURTENANCES REQUIRED FOR A COMPLETE AND OPERATIONAL INSTALLATION OF THE VMS SIGN, CAMERA, AND POINT-TO-POINT RADIO COMPONENTS SHALL BE INCIDENTAL TO THE VMS STRUCTURE PAY ITEM AND WILL NOT BE MEASURED OR PAID FOR SEPARATELY. THE CONDUIT IS CONSIDERED INCIDENTAL EXTENDING TO 5 FEET BEYOND THE OUTSIDE LIMITS OF THE STRUCTURE FOUNDATIONS.

11. FOR LOCAL DATUM BENCHMARK LOCATIONS AND ELEVATIONS FOR FOUNDATION LAYOUTS, SEE HIGHWAY SITE PLANS.

Date: 11/19/2026
Username: EBEAUSOLEIL

Scale: 1/8" = 1'-0"

No.	Revision	By	Date

Designed by: HNTB

CONSULTANT PROJECT MANAGER: Daniel Bouchard, P.E.

	By	Date		By	Date
Designed	GLS	11/2026	Checked	BRG	11/2026
Drawn	ERB	11/2026	In Charge of	TRC	11/2026

HNTB CORPORATION
82 Running Hill Road, Suite 201
South Portland, ME 04106

TEL (207) 774-5155
FAX (207) 228-0909

MAINE TURNPIKE

THE GOLD STAR MEMORIAL HIGHWAY

MTA PROJECT MANAGER: Eric Barnes, P.E.

VARIABLE MESSAGE SIGN REPLACEMENT – VARIOUS LOCATIONS
OVERHEAD SIGN STRUCTURE MM 43.00 HOLMES ROAD (NORTHBOUND)

SHEET NUMBER: S-03

CONTRACT: 2026.23

Filename: z_Sign Structure Layout.dgn

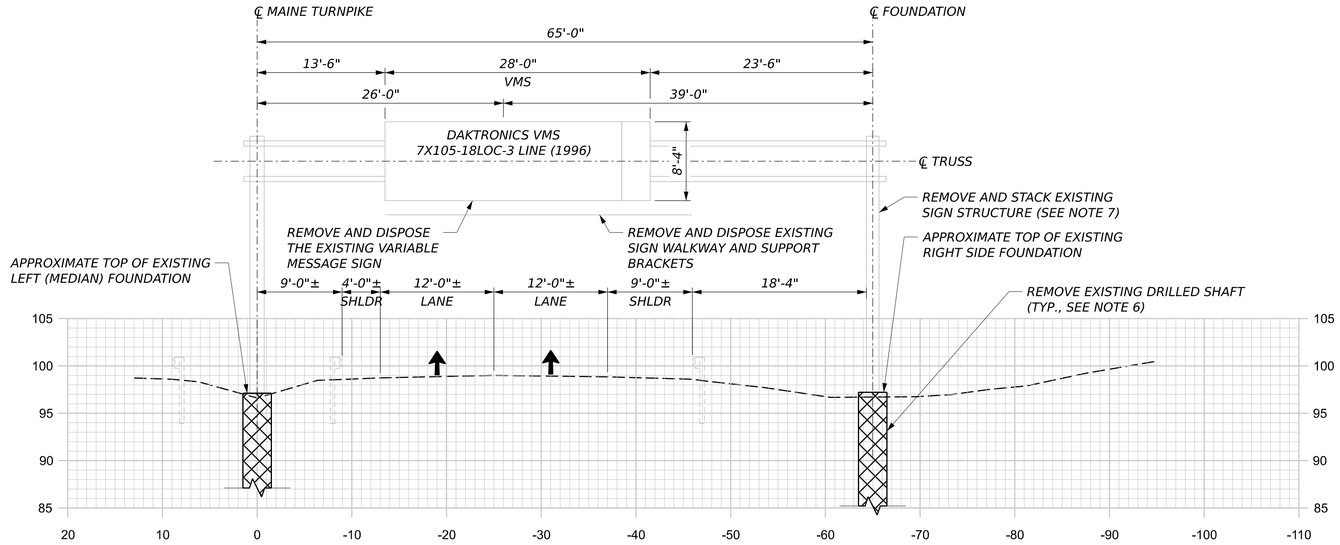

EXISTING OHSS I-95 MM 53.4 SB
MOUNTAIN ROAD VMS

(LOOKING DOWNSTATION)

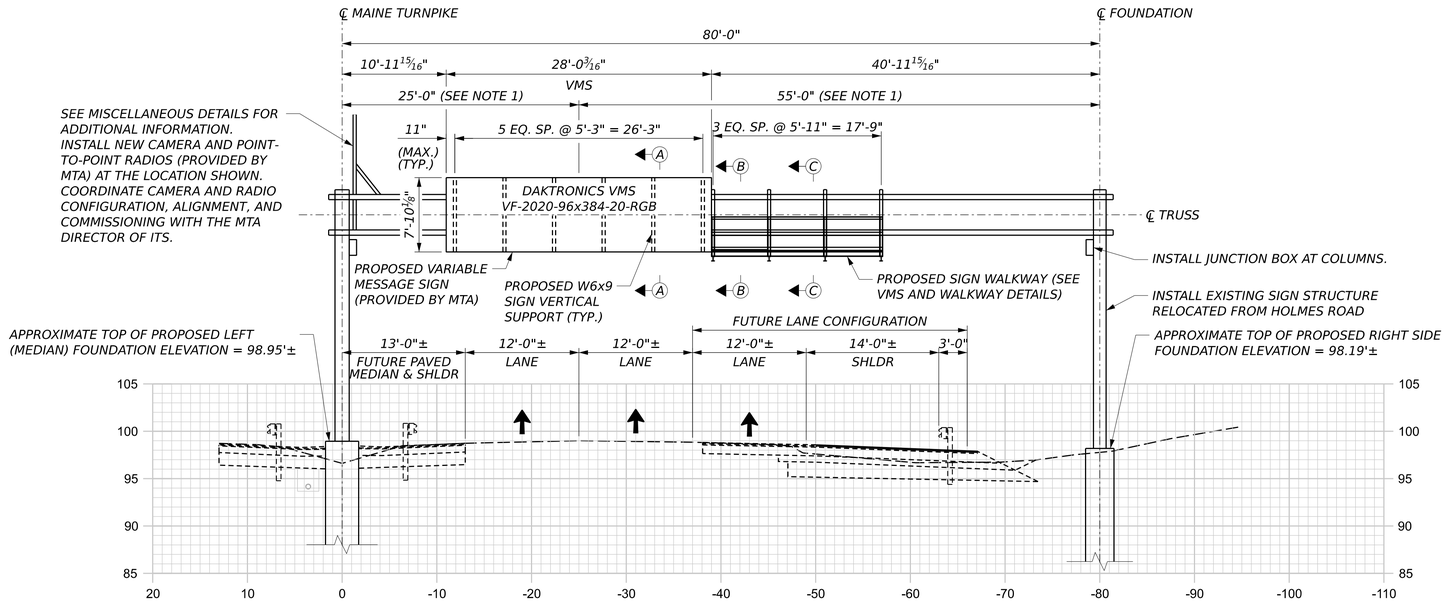

PROPOSED OHSS I-95 MM 53.4 SB
MOUNTAIN ROAD VMS

(LOOKING DOWNSTATION)
(ASSUMED FUTURE ROADWAY SHOWN FOR INFORMATIONAL PURPOSES ONLY)

NOTES:

1. *PROPOSED VMS SHALL BE CENTERED ABOVE THE EXISTING TRAVEL LANES.*

2. *SEE VMS AND WALKWAY DETAILS FOR SECTION A-A, B-B and C-C. W6x9 SIGN AND WALKWAY SUPPORT HORIZONTAL SPACING MAY BE ADJUSTED ± 6" TO AVOID TRUSS LATTICE BRACING.*

3. *CONTRACTOR SHALL VERIFY DISTANCE FROM TOP OF ROADWAY TO BOTTOM CHORD AND ADJUST TOP OF FOUNDATION ELEVATIONS, AS REQUIRED, TO MEET A MINIMUM CLEARANCE OF 18'-0". CONTRACTOR SHALL SUBMIT FIELD MEASUREMENTS TO THE RESIDENT FOR REVIEW.*

4. *CONTRACTOR SHALL SUBMIT SIGN BRACKET AND WALKWAY FABRICATION DETAILS TO MTA FOR REVIEW AND ACCEPTANCE PRIOR TO FABRICATION.*

5. *WALKWAY GRATING SHALL HAVE A SERRATED SURFACE.*

6. *EXISTING CONCRETE DRILLED SHAFTS ARE ENCASED IN STEEL PIPE; THE DEPTH OF THE STEEL CASING IS UNKNOWN. THE CONTRACTOR SHALL REMOVE THE EXISTING CONCRETE DRILLED SHAFTS AND ASSOCIATED STEEL CASINGS TO A MINIMUM DEPTH OF 5'-0" BELOW FINISHED GRADE.*

7. *EXISTING SIGN SUPPORT STRUCTURE (COLUMNS AND TRUSS) SHALL BE REMOVED AND DELIVERED TO THE MTA SIGN SHOP LOCATED AT MM 58.3 NORTHBOUND. CARE SHALL BE TAKEN TO AVOID DAMAGE TO THE EXISTING STRUCTURE DURING REMOVAL AND TRANSPORT OPERATIONS. THE CONTRACTOR SHALL COORDINATE THE DELIVERY DATE AND TIME WITH THE RESIDENT. CONTRACTOR SHALL BE RESPONSIBLE FOR UNLOADING MATERIALS AT THE SIGN SHOP.*

8. *EXISTING OVERHEAD SIGN STRUCTURE AT HOLMES ROAD (MM 43.00 NB) SHALL BE RELOCATED TO MOUNTAIN ROAD (MM 53.4 SB) AND INSTALLED ON NEW FOUNDATIONS WITH NEW ANCHOR RODS AND ANCHOR PLATE. SEE FOUNDATION DETAILS FOR ADDITIONAL INFORMATION.*

9. *ALL CONDUIT, CONDUIT BODIES, FLEXIBLE CONDUIT, FITTINGS, CONNECTORS, AND ASSOCIATED MATERIALS AND APPURTENANCES REQUIRED FOR A COMPLETE AND OPERATIONAL INSTALLATION OF THE VMS SIGN, CAMERA, AND POINT-TO-POINT RADIO COMPONENTS SHALL BE INCIDENTAL TO THE VMS STRUCTURE PAY ITEM AND WILL NOT BE MEASURED OR PAID FOR SEPARATELY. THE CONDUIT IS CONSIDERED INCIDENTAL EXTENDING TO 5 FEET BEYOND THE OUTSIDE LIMITS OF THE STRUCTURE FOUNDATIONS.*

10. *EXISTING GALVANIZED RIGID METAL CONDUIT (GRMC) MOUNTED ON THE SIGN STRUCTURE MAY REMAIN IN PLACE AND BE REUSED WHERE SUITABLE. MODIFY AND/OR EXTEND EXISTING CONDUIT AS NECESSARY TO ACCOMMODATE THE NEW VMS, MEDIAN CAMERA, AND ASSOCIATED EQUIPMENT. PROVIDE ALL NEW FITTINGS, SUPPORTS, AND MATERIALS REQUIRED FOR A COMPLETE AND OPERATIONAL INSTALLATION.*

11. *FOR LOCAL DATUM BENCHMARK LOCATIONS AND ELEVATIONS FOR FOUNDATION LAYOUTS, SEE HIGHWAY SITE PLANS.*

Username: EBEAUSOLEIL
Date: 11/19/2026

Scale: 1/8" = 1'-0"

No.	Revision	By	Date

Designed by: HNTB

CONSULTANT PROJECT MANAGER: Daniel Bouchard, P.E.

	By	Date		By	Date
Designed	GLS	11/2026	Checked	BRG	11/2026
Drawn	ERB	11/2026	In Charge of	TRC	11/2026

HNTB CORPORATION
82 Running Hill Road, Suite 201
South Portland, ME 04106

TEL (207) 774-5155
FAX (207) 228-0909

MAINE TURNPIKE

THE GOLD STAR MEMORIAL HIGHWAY

MTA PROJECT MANAGER: Eric Barnes, P.E.

VARIABLE MESSAGE SIGN REPLACEMENT – VARIOUS LOCATIONS

OVERHEAD SIGN STRUCTURE MM 53.40 MOUNTAIN ROAD (SOUTHBOUND)

SHEET NUMBER: S-04

CONTRACT: 2026.23

Filename: z_Sign Structure Layout.dgn

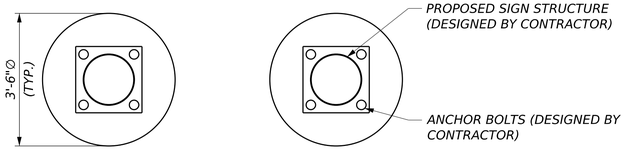

NEW OHSS - DRILLED SHAFT PLAN

CIDER HILL ROAD & HOLMES ROAD
1/2" = 1'-0"

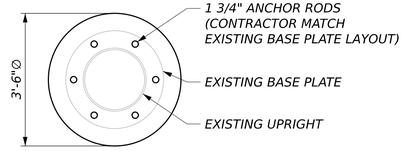

RELOCATED OHSS - DRILLED SHAFT PLAN

MOUNTAIN ROAD
1/2" = 1'-0"

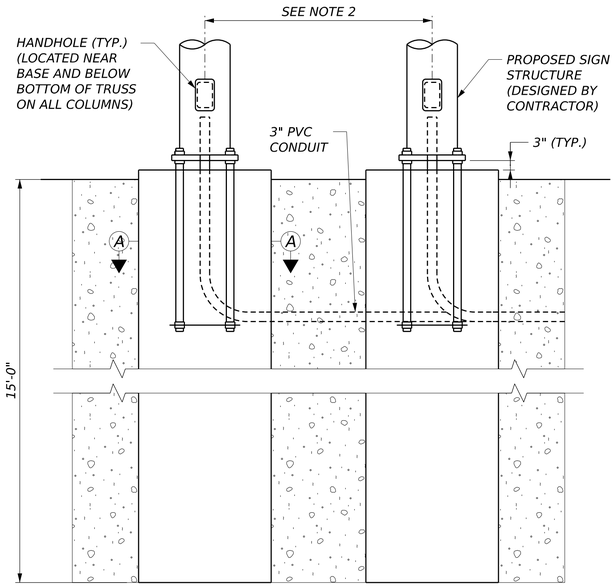

NEW OHSS - DRILLED SHAFT ELEVATION

1/2" = 1'-0"

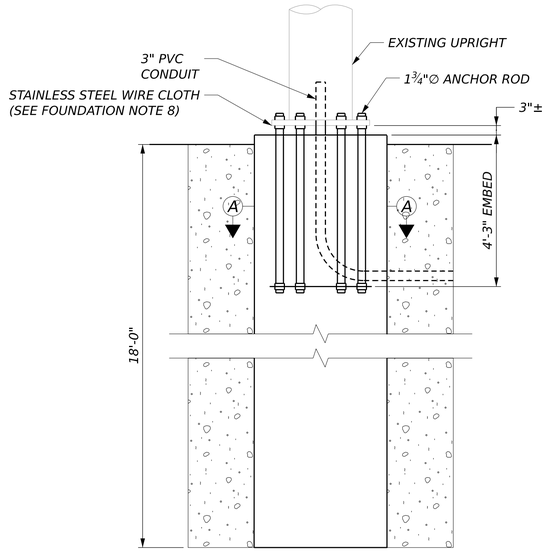

RELOCATED OHSS - DRILLED SHAFT ELEVATION

MOUNTAIN ROAD
1/2" = 1'-0"

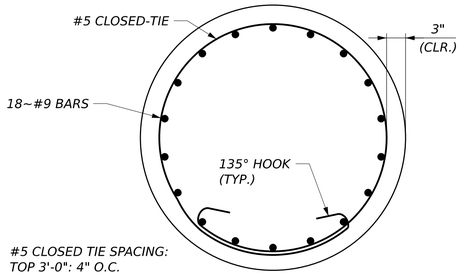

#5 CLOSED TIE SPACING:
TOP 3'-0": 4" O.C.
REMAINDER: 8" O.C.

SECTION A-A

1" = 1'-0"

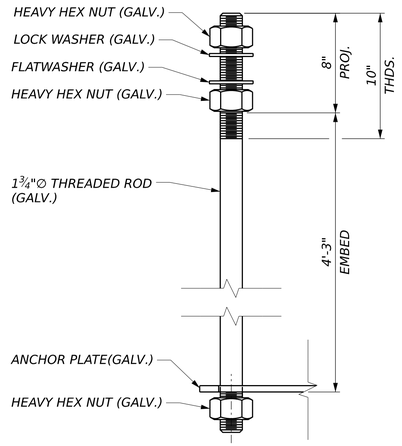

ANCHOR DETAIL

2" = 1'-0"

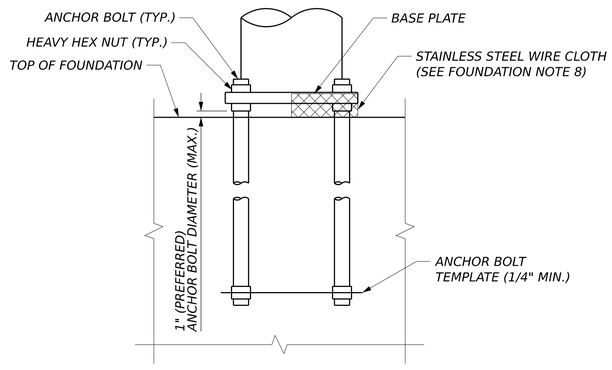

ANCHOR BOLT DETAIL

NEW OHSS AND RELOCATION OF EXISTING OHSS AT MOUNTAIN ROAD
NOT TO SCALE

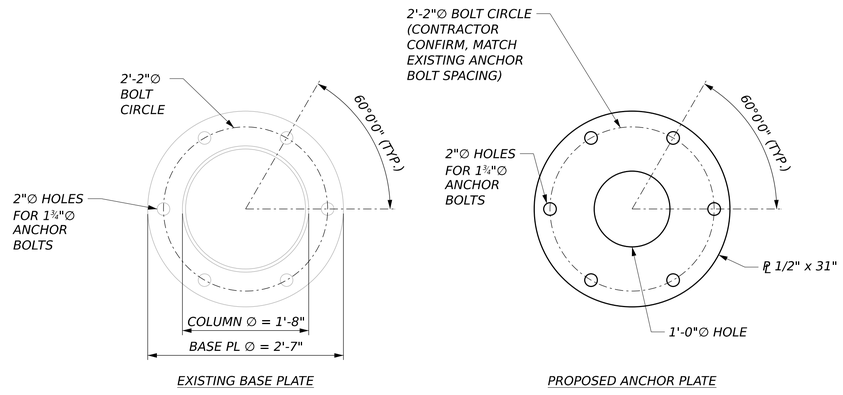

EXISTING BASE PLATE

PROPOSED ANCHOR PLATE

MOUNTAIN ROAD - BASE AND ANCHOR PLATE DETAILS

1" = 1'-0"

ASSUMED NEW OHSS DESIGN CRITERIA

1. THE NEW OHSS FOUNDATIONS HAVE BEEN DESIGNED USING THE ASSUMED MAXIMUM TOP OF FOUNDATION LOADS SHOWN IN THE TABLE BELOW. THE LOADS FROM THE OVERHEAD SIGN STRUCTURE SHALL NOT EXCEED THE LOADS SHOWN. IF FABRICATOR CANNOT DESIGN A STRUCTURE MEETING THESE REQUIREMENTS, ENGINEER SHOULD BE NOTIFIED AND FOUNDATION DESIGN UPDATED PRIOR TO FABRICATION.

2. THE NEW OHSS FOUNDATIONS HAVE BEEN DESIGNED USING AN ASSUMED OVERHEAD SIGN STRUCTURE UPRIGHT SPACING BETWEEN 6'-0" TO 9'-0". THE OVERHEAD SIGN STRUCTURE SHALL HAVE AN UPRIGHT SPACING BETWEEN 6'-0" TO 9'-0" UNLESS OTHERWISE APPROVED BY THE ENGINEER.

3. THE NEW OHSS FOUNDATIONS HAVE BEEN DESIGNED ASSUMING A 4 ANCHOR BOLT PATTERN WITH AN ASSUMED ANCHOR BOLT EMBEDMENT OF 3'-9".

TOP OF FOUNDATION DESIGN LOADS	
LOAD TYPE	MM 6.20
	MM 43.00
MAXIMUM AXIAL LOAD	105 K (UPWARD OR DOWNWARDS)
MAXIMUM OVERTURNING MOMENT	100 KIP-FT
MAXIMUM HORIZONTAL SHEAR FORCE	25 KIP

FOUNDATION NOTES

1. ALL FOUNDATIONS SHALL BE CONSTRUCTED AS SHOWN ON THE PLANS AND IN ACCORDANCE WITH MAINEDOT STANDARD SPECIFICATION 626 AND SPECIAL PROVISION 626. FOUNDATIONS, COMPLETE AND IN PLACE ACCORDING TO THESE PLANS, SHALL BE PAID UNDER THE 626.332 PAY ITEM.

2. ALL CONCRETE FOR THE DRILLED SHAFTS SHALL BE CLASS 'AAA' CONCRETE (F'C = 4500PSI) AND SHALL CONFORM TO MTA SUPPLEMENTAL SPECIFICATION 502. ALL PORTIONS OF THE FOUNDATION ABOVE FINISH GRADE SHALL BE LIGHT COLORED AND HAVE A SMOOTH UNIFORM SURFACE FREE OF DEFECTS AND IRREGULARITIES. ALL EXPOSED EDGES OF CONCRETE SHALL BE CHAMFERED 1-INCH.

3. A CLEAR PROTECTIVE COATING FOR CONCRETE SURFACES, CONFORMING TO SPECIAL PROVISION 515, SHALL BE APPLIED ON ALL CONCRETE SURFACES ABOVE FINISHED GRADE TO 1 FOOT BELOW FINISHED GRADE. COATING SHALL BE INCIDENTAL TO THE 645.12 ITEMS.

4. ALL REINFORCING STEEL SHALL BE AASHTO M31 (ASTM A615) GRADE 60, EPOXY COATED AND SHALL CONFORM TO MAINEDOT STANDARD SPECIFICATION 503. REINFORCING STEEL SHOP DRAWINGS SHALL BE SUBMITTED BY THE CONTRACTOR FOR APPROVAL. REINFORCING STEEL SHALL BE INCIDENTAL TO THE 626.332 PAY ITEM.

5. ALL BACKFILL SHALL BE GRAVEL BORROW MEETING THE REQUIREMENTS OF MAINEDOT STANDARD SPECIFICATION 203 AND SHALL BE INCIDENTAL TO THE 626.332 PAY ITEM.

6. STRUCTURAL EXCAVATION, BACKFILLING AND COMPACTION SHALL BE IN ACCORDANCE WITH MAINEDOT STANDARD SPECIFICATION 206 AND SHALL BE INCIDENTAL TO THE 626.332 PAY ITEM.

7. PAYMENT FOR REMOVAL AND RESTORATION OF GRASS AND VEGETATION DISTURBED BY THE CONSTRUCTION OF THE FOUNDATIONS SHALL BE INCIDENTAL TO THE 626.332 PAY ITEM. RESTORATION OF GRASS AND VEGETATION SHALL BE AS DIRECTED BY THE RESIDENT.

8. THE GAP BETWEEN THE BASE PLATE AND TOP OF FOUNDATION SHALL BE WRAPPED IN AWG #16 STAINLESS STEEL WIRE CLOTH, WITH A 1/4" MAXIMUM OPENING AND A 2" LAP. SECURE WITH 3/4" STAINLESS STEEL BANDING AFTER ANCHOR RODS ARE INSTALLED. ALL COSTS SHALL BE INCIDENTAL TO THE 645.12 ITEMS.

9. CONTRACTOR TO PROVIDE CONDUIT IN THE DRILLED SHAFT AS REQUIRED TO INSTALL VMS. THIS WORK SHALL BE INCIDENTAL TO 626.332 PAY ITEM.

10. IF SOIL CONDITIONS DIFFER MATERIALLY FROM THOSE SHOWN ON THE HISTORICAL BORINGS, AND DESCRIBED BELOW, THE CONTRACTOR SHALL STOP WORK AND NOTIFY THE RESIDENT:

CIDER HILL ROAD: MEDIUM TO DENSE BROWN SILTY PEBBLY SAND & GRAVEL
HOLMES ROAD: BROWN SILTY FINE SAND
MOUNTAIN ROAD: GRAY HARD DENSE SAND & LITTLE GRAVEL
WELLS WB: DENSE BROWN SILTY FINE SAND

Username: EBEAUSOLEIL Date: 11/19/2026

Scale: AS NOTED

No.	Revision	By	Date

Designed by: HNTB

CONSULTANT PROJECT MANAGER: Daniel Bouchard, P.E.

	By	Date		By	Date
Designed	GLS	11/2026	Checked	BRG	11/2026
Drawn	ERB	11/2026	In Charge of	TRC	11/2026

HNTB CORPORATION
82 Running Hill Road, Suite 201
South Portland, ME 04106

TEL (207) 774-5155
FAX (207) 228-0909

MAINE TURNPIKE

THE GOLD STAR MEMORIAL HIGHWAY

MTA PROJECT MANAGER: Eric Barnes, P.E.

VARIABLE MESSAGE SIGN REPLACEMENT – VARIOUS LOCATIONS

FOUNDATION DETAILS I

SHEET NUMBER: S-05

CONTRACT: 2026.23

Filename: z_Sign Structure Details.dgn

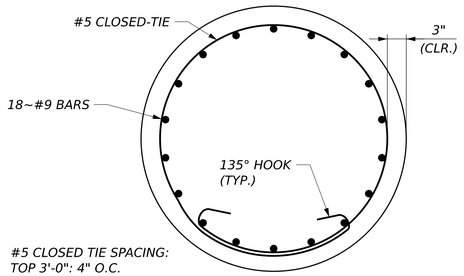

SECTION A-A

WELLS EXIT 19 - WB
1" = 1'-0"

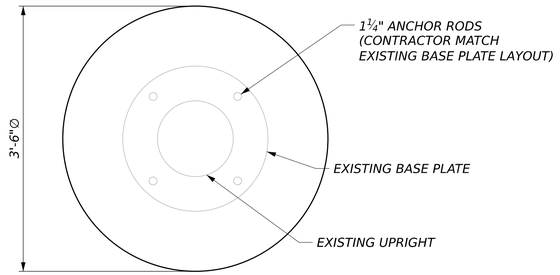

RELOCATED SIDE MOUNT SIGN - DRILLED SHAFT PLAN

WELLS EXIT 19 - WB
1" = 1'-0"

NOTE: IF BEDROCK IS ENCOUNTERED BEFORE REQUIRED 12'-0" DRILLED SHAFT DEPTH, THIS LEDGE ANCHOR DETAIL SHALL BE USED.

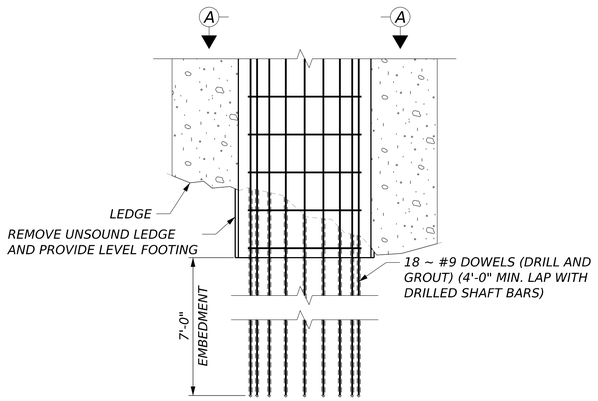

RELOCATED SIDE MOUNT SIGN - DRILLED SHAFT LEDGE DETAIL

WELLS EXIT 19 - WB
1/2" = 1'-0"

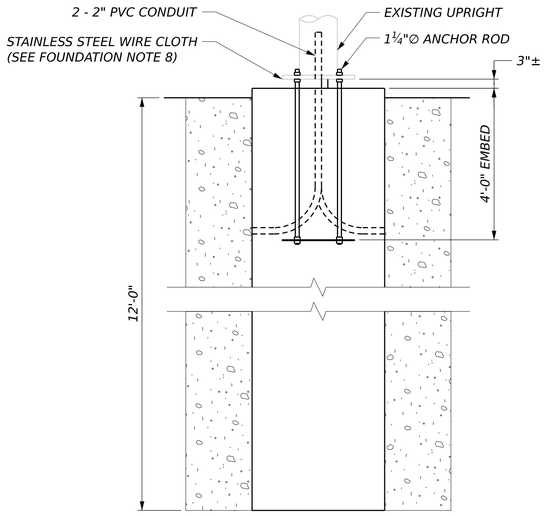

RELOCATED SIDE MOUNT SIGN - DRILLED SHAFT ELEVATION

WELLS EXIT 19 - WB
1/2" = 1'-0"

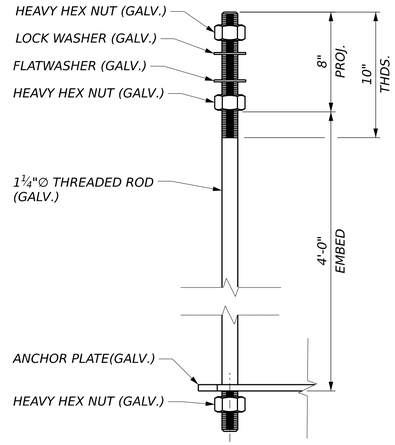

ANCHOR DETAIL

WELLS EXIT 19 - WB
2" = 1'-0"

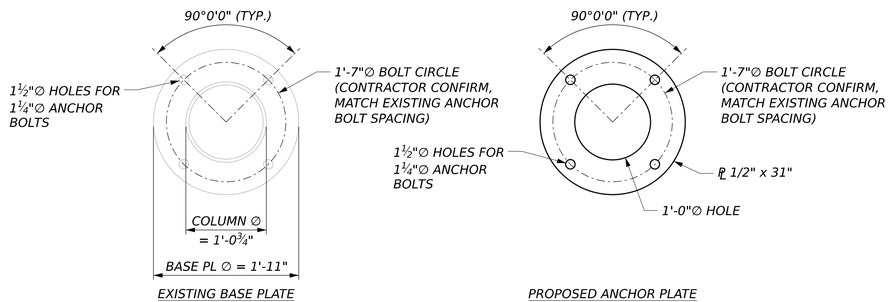

WELLS EXIT 19 - BASE AND ANCHOR PLATE DETAILS

1" = 1'-0"

Username: EBEAUSOLEIL Date: 11/19/2026

Scale: NOT TO SCALE			
No.	Revision	By	Date

Designed by: HNTB

CONSULTANT PROJECT MANAGER: Daniel Bouchard, P.E.

	By	Date		By	Date
Designed	GLS	11/2026	Checked	BRG	11/2026
Drawn	ERB	11/2026	In Charge of	TRC	11/2026

HNTB CORPORATION
82 Running Hill Road, Suite 201
South Portland, ME 04106

TEL (207) 774-5155
FAX (207) 228-0909

MAINE TURNPIKE

THE GOLD STAR MEMORIAL HIGHWAY

MTA PROJECT MANAGER: Eric Barnes, P.E.

VARIABLE MESSAGE SIGN REPLACEMENT – VARIOUS LOCATIONS

FOUNDATION DETAILS II

SHEET NUMBER: S-06

CONTRACT: 2026.23

Filename: z_Sign Structure Details.dgn

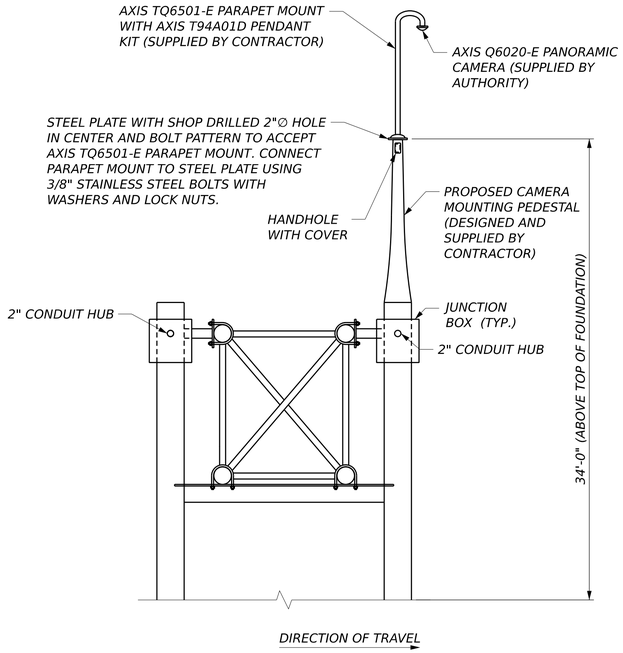

PROPOSED OHSS CAMERA MOUNT

1/2" 1'-0"

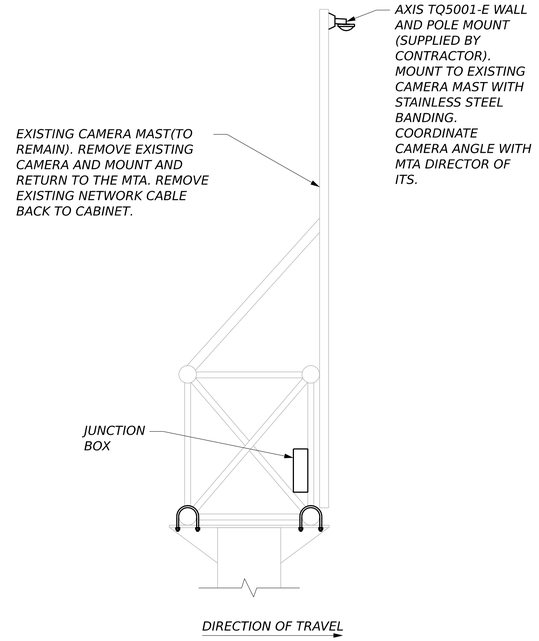

OHSS CAMERA MOUNT ON EXISTING STRUCTURE

MOUNTAIN ROAD (RELOCATED FROM HOLMES ROAD)
1/2" 1'-0"

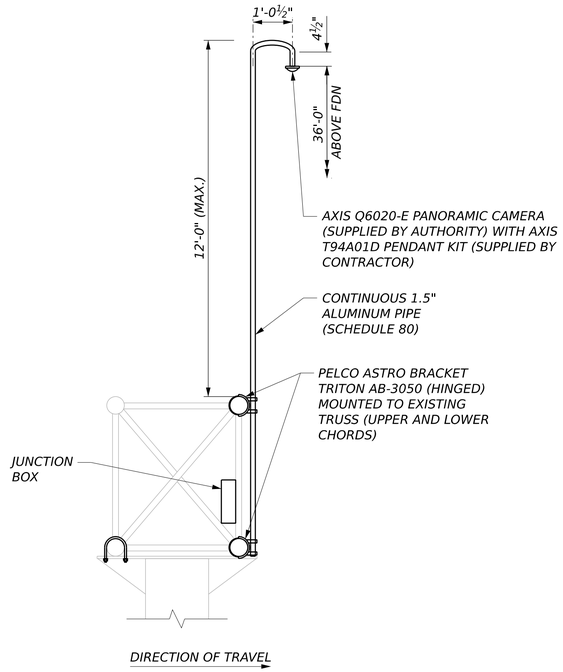

OHSS CAMERA MOUNT ON EXISTING STRUCTURE

LIMERICK ROAD
1/2" 1'-0"

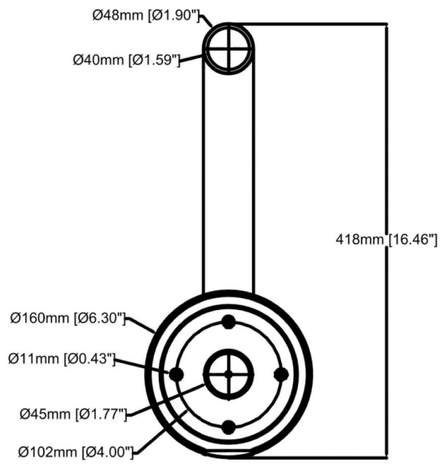

AXIS TQ6501-E PARAPET MOUNT BOLT PATTERN

NOT TO SCALE

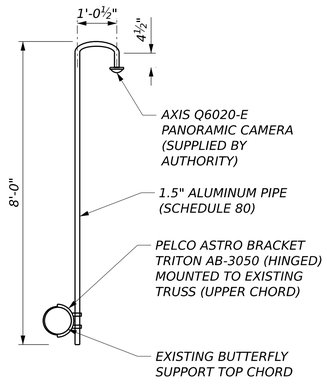

SIDE MOUNT CAMERA MOUNT ON EXISTING STRUCTURE

YORK - EXIT 7 AND SOUTH PORTLAND - EXIT 45
1/2" 1'-0"

Username: PMCKECHNIE Date: 11/20/2026

Scale: AS NOTED

No.	Revision	By	Date

Designed by: HNTB

CONSULTANT PROJECT MANAGER: Daniel Bouchard, P.E.

	By	Date		By	Date
Designed	GLS	11/2026	Checked	BRG	11/2026
Drawn	ERB	11/2026	In Charge of	TRC	11/2026

HNTB CORPORATION
82 Running Hill Road, Suite 201
South Portland, ME 04106

TEL (207) 774-5155
FAX (207) 228-0909

MAINE TURNPIKE

THE GOLD STAR MEMORIAL HIGHWAY

MTA PROJECT MANAGER: Eric Barnes, P.E.

VARIABLE MESSAGE SIGN REPLACEMENT – VARIOUS LOCATIONS

MISCELLANEOUS STRUCTURAL DETAILS

SHEET NUMBER: S-07

CONTRACT: 2026.23

Filename: z_Sign Structure Details.dgn

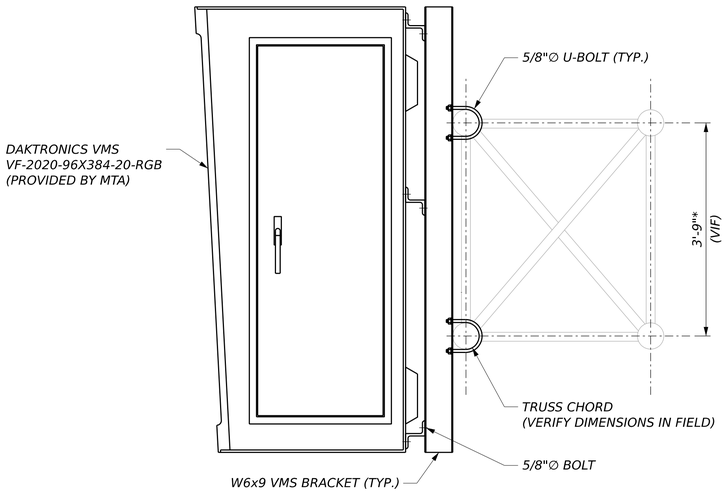

NOTE: VIF = VERIFY IN FIELD

* FOR NEW SIGN STRUCTURES THIS DIMENSION WILL BE DESIGNED BY THE CONTRACTOR

SECTION A-A

3/4" = 1'-0"

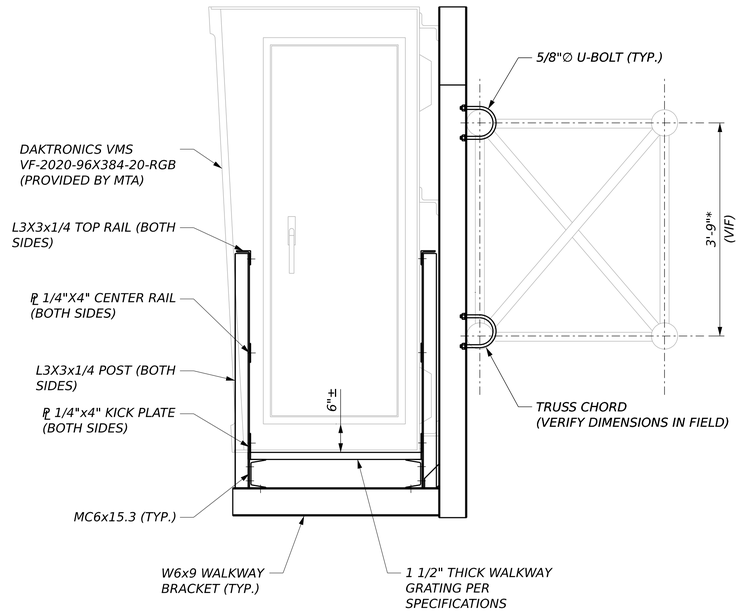

SECTION B-B

3/4" = 1'-0"

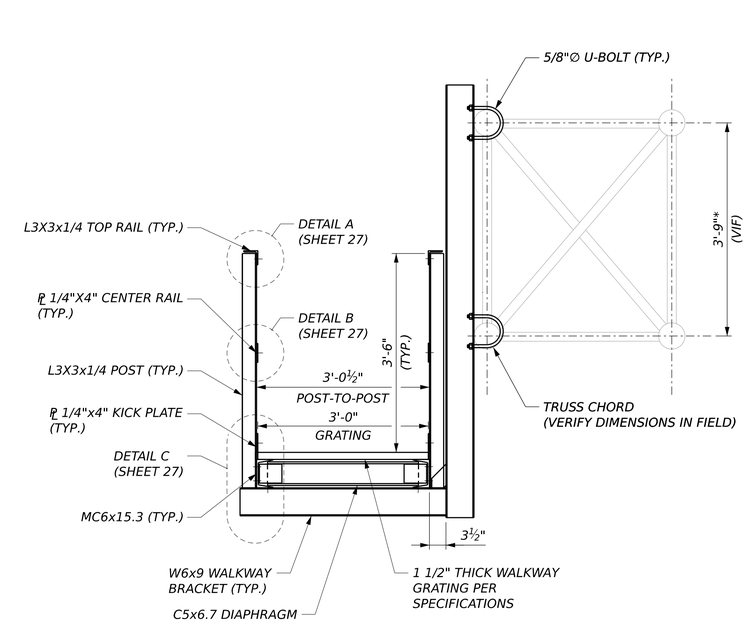

SECTION C-C

3/4" = 1'-0"

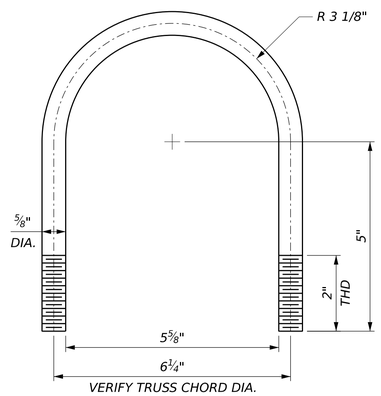

U-BOLT DETAIL

6" = 1'-0"

NOTE: TOP AND CENTER RAILS SHALL BE CONTINUOUS SECTIONS WITH NO SPLICES

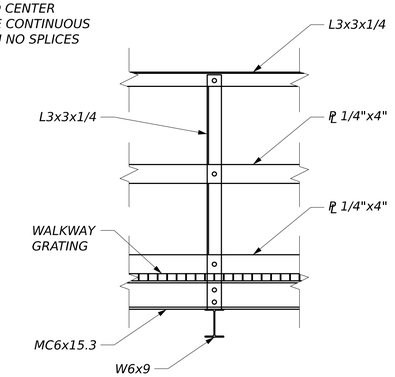

RAILING POST ELEVATION VIEW

3/4" = 1'-0"

Username: EBEAUSOLEIL Date: 11/19/2026

Scale: AS NOTED

No.	Revision	By	Date

Designed by: HNTB

CONSULTANT PROJECT MANAGER: Daniel Bouchard, P.E.

	By	Date		By	Date
Designed	GLS	11/2026	Checked	BRG	11/2026
Drawn	ERB	11/2026	In Charge of	TRC	11/2026

HNTB CORPORATION
82 Running Hill Road, Suite 201
South Portland, ME 04106

TEL (207) 774-5155
FAX (207) 228-0909

MAINE TURNPIKE

THE GOLD STAR MEMORIAL HIGHWAY

MTA PROJECT MANAGER: Eric Barnes, P.E.

VARIABLE MESSAGE SIGN REPLACEMENT – VARIOUS LOCATIONS
VMS AND WALKWAY DETAILS I

SHEET NUMBER: S-08

CONTRACT: 2026.23

Filename: z_Sign Structure Details.dgn

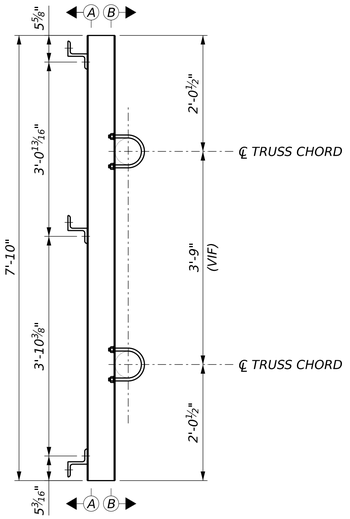

ELEVATION

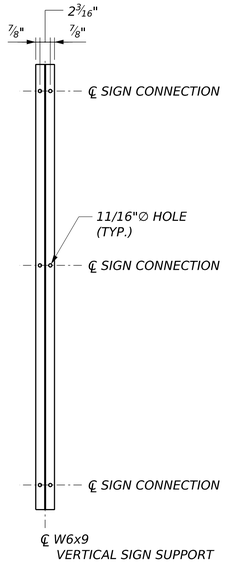

SECTION A-A

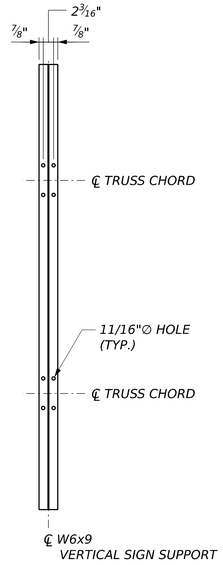

SECTION B-B

W6x9 SIGN BRACKET DETAIL

3/4" = 1'-0"

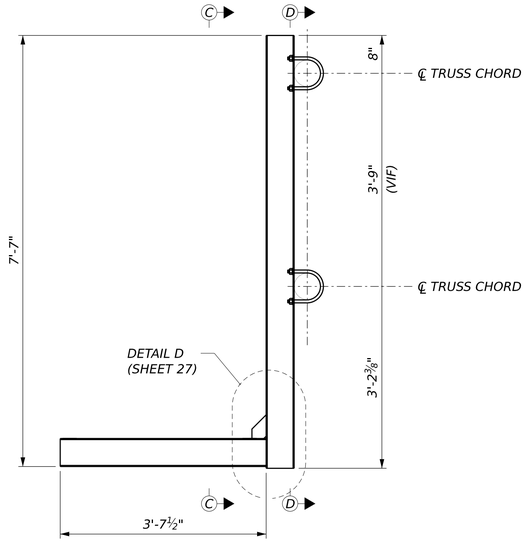

ELEVATION

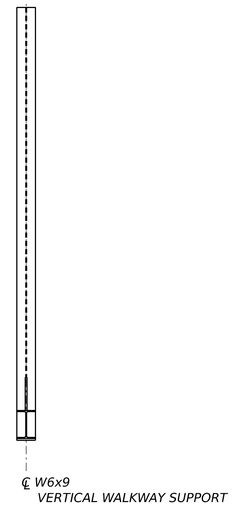

SECTION C-C

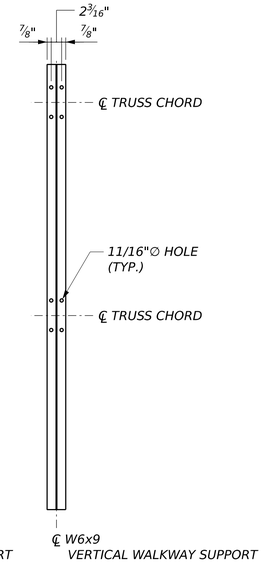

SECTION D-D

W6x9 WALKWAY BRACKET DETAIL

3/4" = 1'-0"

NOTES:

1. CONTRACTOR FIELD VERIFY ALL DIMENSIONS PRIOR TO FABRICATION.
2. CONTRACTOR VERIFY 17'-6" VERTICAL CLEARANCE IS MET AND ADJUST DIMENSIONS ACCORDINGLY.
3. CONTRACTOR VERIFY 6"±STEP HEIGHT INTO VMS DOOR AND ADJUST DIMENSIONS ACCORDINGLY.

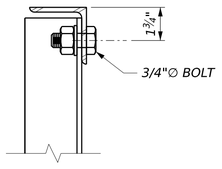

DETAIL A

3" = 1'-0"

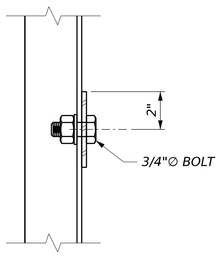

DETAIL B

3" = 1'-0"

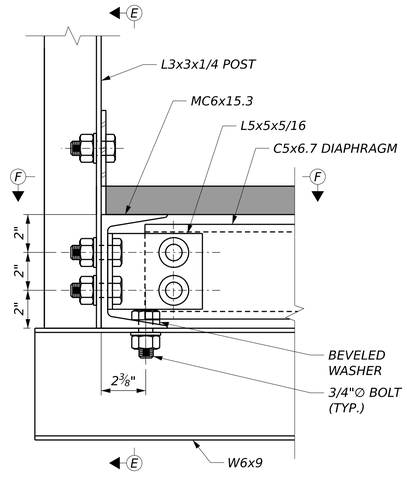

DETAIL C

3" = 1'-0"

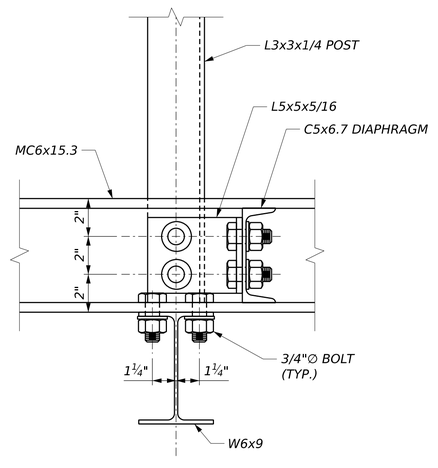

SECTION E-E

3" = 1'-0"

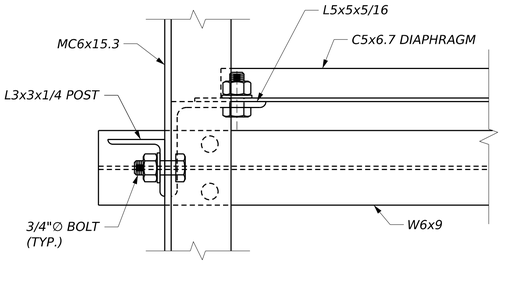

SECTION F-F

3" = 1'-0"

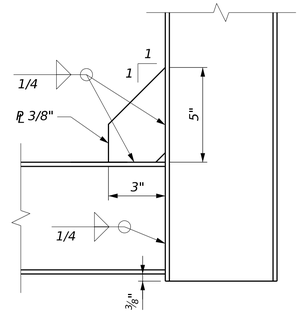

DETAIL D

3" = 1'-0"

Scale: AS NOTED

No.	Revision	By	Date

Designed by: HNTB

CONSULTANT PROJECT MANAGER: Daniel Bouchard, P.E.

	By	Date		By	Date
Designed	GLS	11/2026	Checked	BRG	11/2026
Drawn	ERB	11/2026	In Charge of	TRC	11/2026

HNTB CORPORATION
82 Running Hill Road, Suite 201
South Portland, ME 04106

TEL (207) 774-5155
FAX (207) 228-0909

MAINE TURNPIKE

THE GOLD STAR MEMORIAL HIGHWAY

MTA PROJECT MANAGER: Eric Barnes, P.E.

VARIABLE MESSAGE SIGN REPLACEMENT – VARIOUS LOCATIONS
VMS AND WALKWAY DETAILS II

SHEET NUMBER: S-09

CONTRACT: 2026.23

Username: EBEAUSOLEIL Date: 11/19/2026

Filename: z_Sign Structure Details.dgn

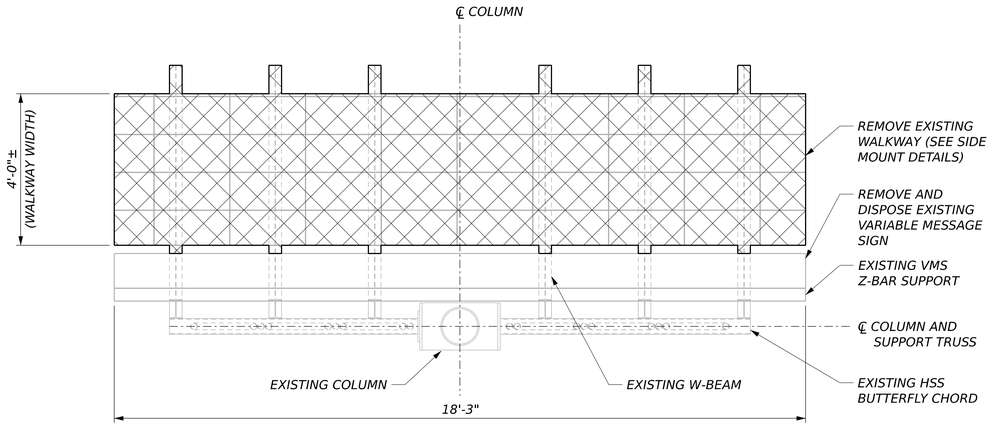

EXISTING PLAN

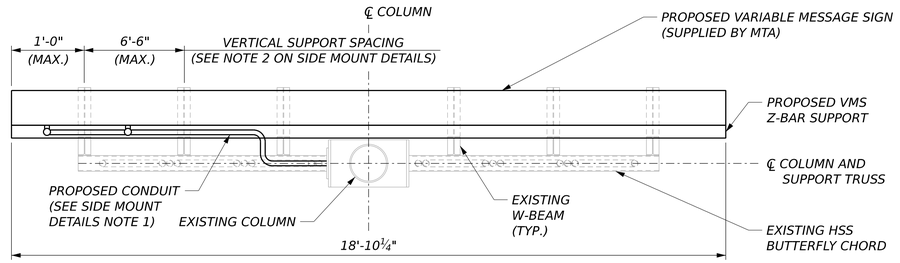

PROPOSED PLAN

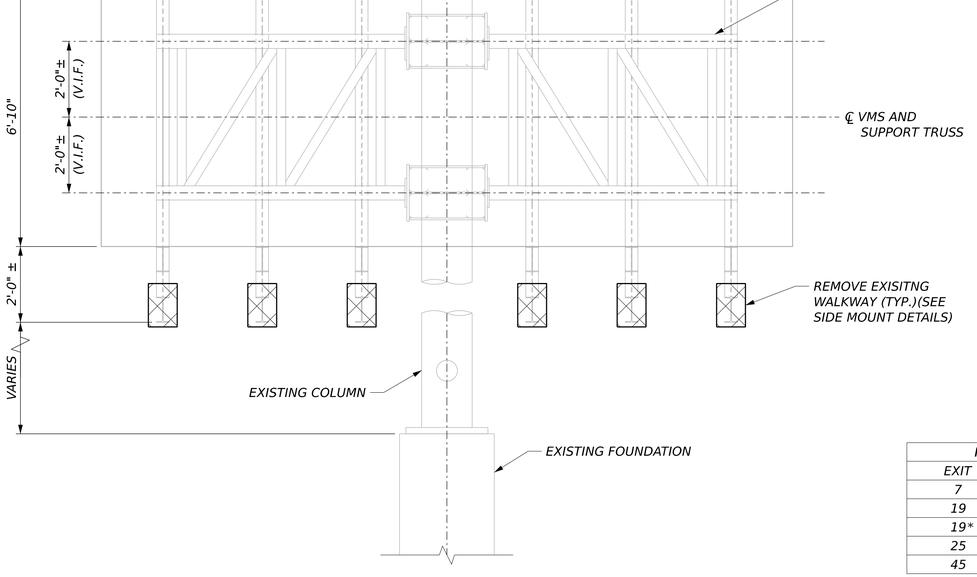

EXISTING ELEVATION

ROADSIDE VMS REPLACEMENT		
EXIT	VMS LOCATION	DIRECTION
7	SPUR ROAD	WB
19	SANFORD ROAD	EB
19*	SANFORD ROAD	WB
25	FLETCHER STREET	WB
45	ROUTE 703	WB

* SIGN STRUCTURE TO BE RELOCATED ONTO NEW FOUNDATION, SEE FOUNDATION DETAILS

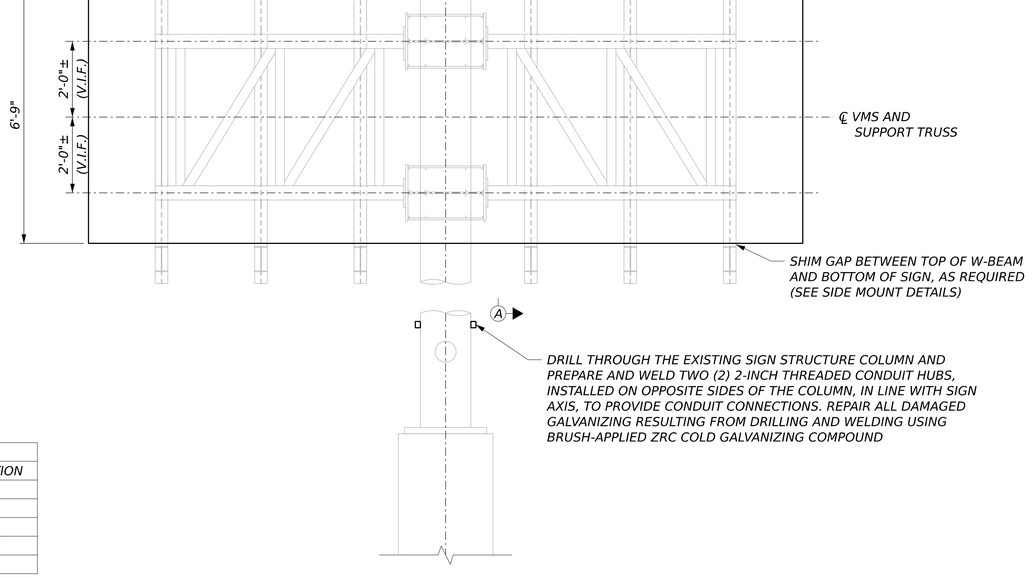

PROPOSED ELEVATION

Username: EBEAUSOLEIL
Date: 11/19/2026

Scale: 1/2" = 1'-0"

No.	Revision	By	Date

Designed by: HNTB

CONSULTANT PROJECT MANAGER: Daniel Bouchard, P.E.

	By	Date		By	Date
Designed	GLS	11/2026	Checked	BRG	11/2026
Drawn	ERB	11/2026	In Charge of	TRC	11/2026

HNTB CORPORATION
82 Running Hill Road, Suite 201
South Portland, ME 04106

TEL (207) 774-5155
FAX (207) 228-0909

MAINE TURNPIKE

THE GOLD STAR MEMORIAL HIGHWAY

MTA PROJECT MANAGER: Eric Barnes, P.E.

VARIABLE MESSAGE SIGN REPLACEMENT – VARIOUS LOCATIONS

SIDE MOUNT PLAN & ELEVATION

SHEET NUMBER: S-10

CONTRACT: 2026.23

Filename: z_Sign Structure Details.dgn

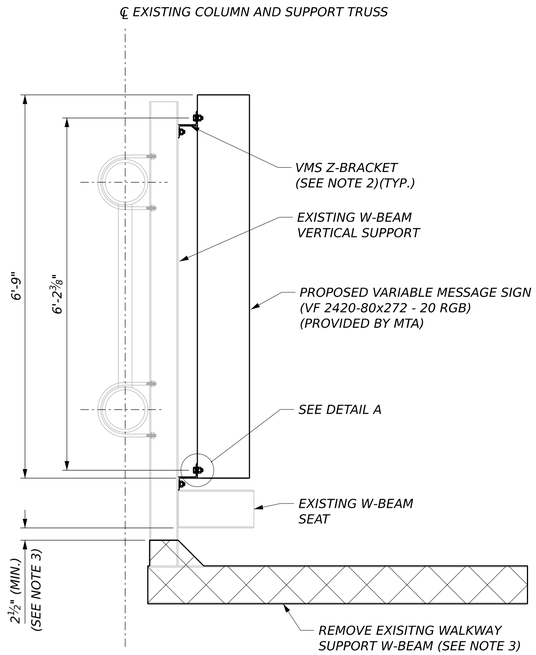

SECTION A-A

3/4" = 1'-0"

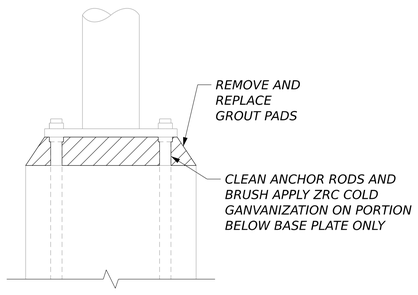

SIDE MOUNT GROUT PAD MODIFICATIONS

3/4" = 1'-0"

NOTE: CONTRACTOR SHALL SUBMIT A GROUT PAD REMOVAL AND REPLACEMENT PROCEDURE TO THE RESIDENT FOR APPROVAL SUCH THAT THE BASE PLATE AND ANCHOR RODS ARE NOT LEFT UNSUPPORTED DURING REMOVAL AND CONCRETE CURING

NOTES:

1. *VMS CABLES SHALL BE INSTALLED IN NEW 1 1/2" LIQUIDTIGHT FLEXIBLE METAL CONDUIT FROM THE SIGN STRUCTURE TO THE VMS SIGN OR AS INDICATED BY THE MANUFACTURER. CONDUITS SHALL ENTER THE VMS WHERE INDICATED BY THE MANUFACTURER. EXISTING LIQUIDTIGHT FLEXIBLE METAL CONDUIT AND ASSOCIATED SUPPORTS SHALL BE REMOVED FROM SIGN STRUCTURE AND NOT REUSED. CABLES SHALL BE INSTALLED IN 2" SCH. 80 PVC CONDUIT FROM THE CONTROLLER CABINET TO THE BASE OF THE SIGN STRUCTURE.*

2. *PROPOSED VARIABLE MESSAGE SIGN WILL HAVE Z-BAR TO MOUNT THE SIGN TO THE EXISTING W-BEAM SIGN SUPPORTS. EXISTING W-BEAM SPACING MAY BE MODIFIED, AS REQUIRED, TO MEET DAKTRONICS VERTICAL SUPPORT SPACING REQUIREMENTS SHOWN ON PLAN VIEW AND SHOP DRAWINGS. EXISTING MOUNTING HARDWARE FOR TRUSS TO W-BEAM SUPPORTS SHALL BE REUSED. IF SUPPORT HARDWARE IS DAMAGED OR IN POOR CONDITION, THE HARDWARE SHALL BE REPLACED BY THE CONTRACTOR. PAYMENT FOR REPLACEMENT HARDWARE AND RELOCATING THE VERTICAL SUPPORTS SHALL BE INCIDENTAL TO THE VMS INSTALLATION PAY ITEMS. DAKTRONICS ENGINEERING SHALL BE CONTACTED IF SPACING REQUIREMENTS ARE UNABLE TO BE MET. Z-BRACKET CONNECTION BOLTS SHALL BE FIELD LOCATED AND FIELD DRILLED AND FIELD DRILLED HOLES SHALL BE BRUSH GALVANIZED AFTER DRILLING. ANY ABANDONED HOLES SHALL BE FILLED WITH BOLTS.*

3. *EXISTING SIGN WALKWAYS AND LOWER SECTION OF THE VERTICAL W-BEAM SUPPORTS SHALL BE REMOVED AS SHOWN. REMOVAL METHOD SHALL BE MECHANICAL CUTTING TO MINIMIZE DAMAGE TO EXISTING GALVANIZATION. NO FLAME CUTTING IS ALLOWED. ALL BURRS RESULTING FROM CUTTING OPERATIONS SHALL BE REMOVED. EDGE SHALL BE COATED WITH BRUSH APPLIED ZRC COLD GALVANIZING COMPOUND.*

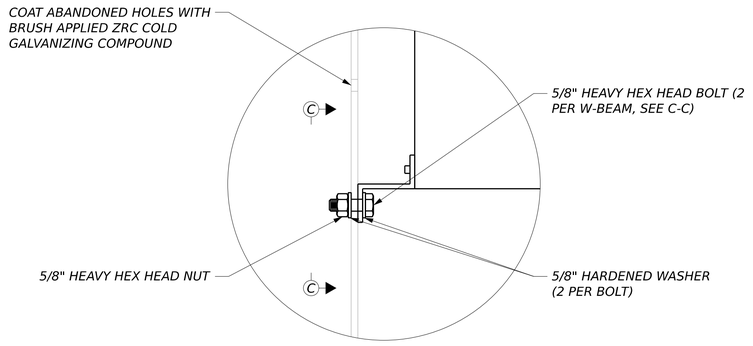

DETAIL A

NOT TO SCALE

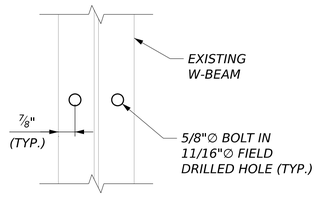

SECTION C-C

3" = 1'-0"

Username: EHANDLEY
Date: 11/19/2026

Scale: AS NOTED

No.	Revision	By	Date

Designed by: HNTB

CONSULTANT PROJECT MANAGER: Daniel Bouchard, P.E.

	By	Date		By	Date
Designed	GLS	11/2026	Checked	BRG	11/2026
Drawn	ERB	11/2026	In Charge of	TRC	11/2026

HNTB CORPORATION
82 Running Hill Road, Suite 201
South Portland, ME 04106

TEL (207) 774-5155
FAX (207) 228-0909

MAINE TURNPIKE

THE GOLD STAR MEMORIAL HIGHWAY

MTA PROJECT MANAGER: Eric Barnes, P.E.

VARIABLE MESSAGE SIGN REPLACEMENT – VARIOUS LOCATIONS

SIDE MOUNT DETAILS

SHEET NUMBER: S-11

CONTRACT: 2026.23

Filename: z_Sign Structure Details.dgn

BARRIER NOTES

1. INSTALLATION OF THE BARRIER REFLECTORS WILL BE CONSIDERED INCIDENTAL TO THE ASSOCIATED 526 PAY ITEM.

2. AT THE CONTRACTOR'S DISCRETION PORTIONS OF THE BARRIER FACE THAT WILL BE LOCATED BELOW GRADE MAY BE CAST VERTICAL RATHER THAN SLOPED.

3. THE TOP OF THE BARRIER SHALL BE FLUSH ACROSS ALL JOINTS, INCLUDING CONSTRUCTION, CONTRACTION, EXPANSION, AND STRUCTURAL TUBE CONNECTIONS. THE TOP OF THE BARRIER, EXCEPT AS REQUIRED AT HEIGHT TRANSITIONS, SHALL BE PARALLEL TO THE PAVEMENT SURFACE AT EDGE OF TRAVELWAY.

4. SCREW PIN SHALL BE SECURED WITH AN APPROVED THREAD LOCK MATERIAL DURING FINAL ASSEMBLY.

5. A D-SHACKLE SHALL BE ATTACHED TO EACH I-BEAM.

STRUCTURAL NOTES

1. PRIOR TO FABRICATING THE PRECAST CONCRETE BARRIER AND REINFORCING THE CONTRACTOR SHALL SUBMIT WORKING DRAWINGS OF THE PROPOSED MEDIAN BARRIER LAYOUT AND ITS COMPONENTS IN ACCORDANCE WITH SPECIAL PROVISION 526.

2. REINFORCING SCHEDULES SHALL BE THE RESPONSIBILITY OF THE CONTRACTOR. PAYMENT FOR ALL WORK ASSOCIATED WITH DEVELOPING THE REINFORCEMENT SCHEDULES WILL BE CONSIDERED INCIDENTAL TO THE ASSOCIATED 526 PAY ITEM.

3. ALL BARRIER REINFORCING STEEL SHALL HAVE A MINIMUM COVER OF 3 INCHES AT THE ENDS OF BARRIER SEGMENTS, AND 2.5 INCHES OF COVER ELSEWHERE, EXCEPT AS OTHERWISE NOTED.

4. ALL PROPOSED BARRIER CONNECTION COMPONENTS SHALL BE HOT DIPPED GALVANIZED AFTER FABRICATION IN ACCORDANCE WITH ASTM A123 OR A153 AS APPLICABLE.

5. ALL EXPOSED EDGES OF CONCRETE SHALL HAVE A 3/4" CHAMFER UNLESS NOTED OTHERWISE.

Username: EBEAUSOLEIL Date: 11/19/2026

Scale: AS NOTED

No.	Revision	By	Date

Designed by: HNTB

CONSULTANT PROJECT MANAGER: Daniel Bouchard, P.E.

	By	Date		By	Date
Designed	GLS	11/2026	Checked	BRG	11/2026
Drawn	ERB	11/2026	In Charge of	TRC	11/2026

HNTB CORPORATION
82 Running Hill Road, Suite 201
South Portland, ME 04106

TEL (207) 774-5155
FAX (207) 228-0909

MAINE TURNPIKE

THE GOLD STAR MEMORIAL HIGHWAY

MTA PROJECT MANAGER: Eric Barnes, P.E.

VARIABLE MESSAGE SIGN REPLACEMENT – VARIOUS LOCATIONS

BARRIER NOTES

SHEET NUMBER: BD-01

CONTRACT: 2026.23

Filename: z_Barrier Details.dgn

CONCRETE BARRIER REINFORCING SCHEDULE *				
DESCRIPTION	SIZE	NO.	UNBENT LENGTH	TYPE
LONGITUDINAL	#4	14	19'-6"	
STIRRUPS	#4	29	11'-2"	
LOOP BAR	#6	2	7'-9"	

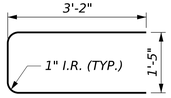

#6 LOOP BAR (TOP VIEW)

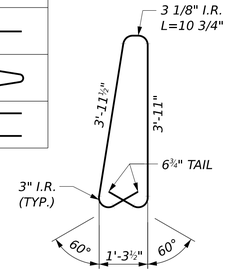

#4 STIRRUP BAR

* QUANTITIES BASED ON 20'-0" BARRIER LENGTH

SPACING OF REFLECTORS	
RADIUS OF HORIZONTAL CURVE	℄ TO ℄ DISTANCE BETWEEN REFLECTORS
LESS THAN 2000'	115'
2000' TO 3000'	130'
3000' TO 5000'	160'
OVER 5000'	200'
TANGENT AREA	200'

TABLE 1

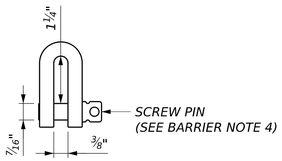

D-SHACKLE DETAIL

(1 PER I-BEAM)
6" = 1'-0"

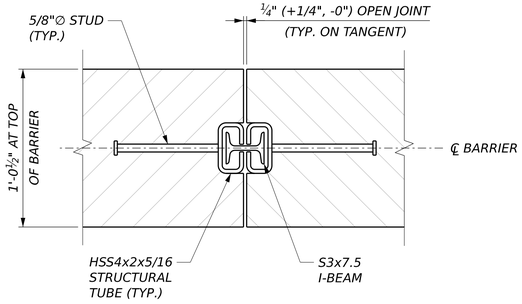

BARRIER CONNECTION DETAIL

2" = 1'-0"

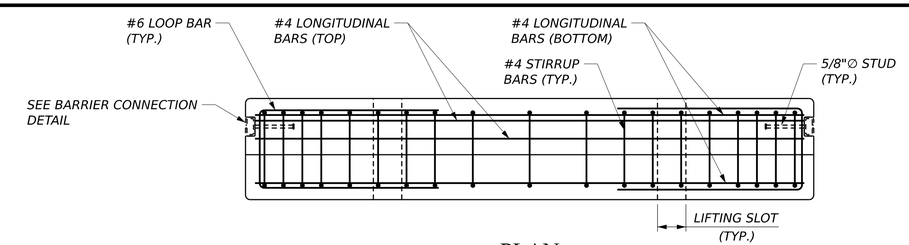

PLAN

3/4" = 1'-0"

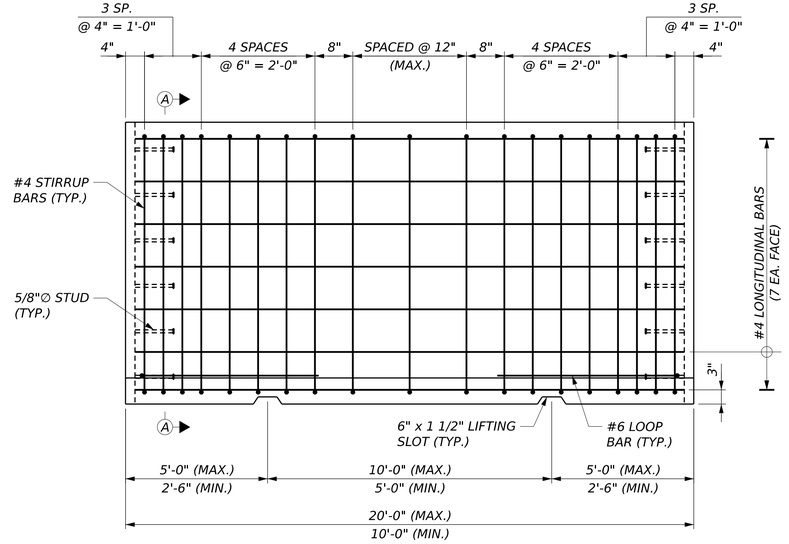

ELEVATION

3/4" = 1'-0"

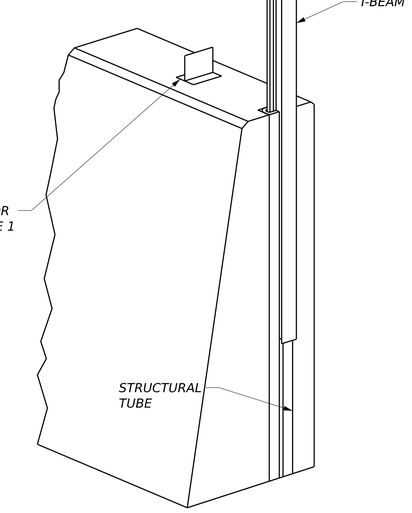

PERSPECTIVE VIEW

NOT TO SCALE

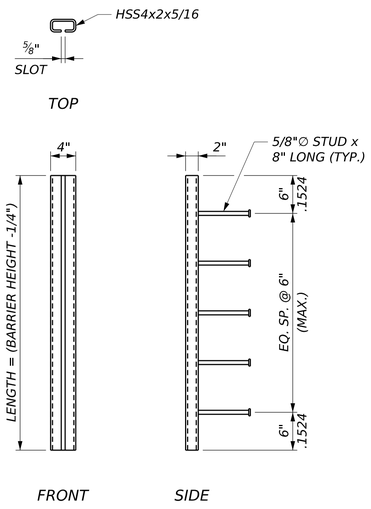

STRUCTURAL TUBE DETAILS

1" = 1'-0"

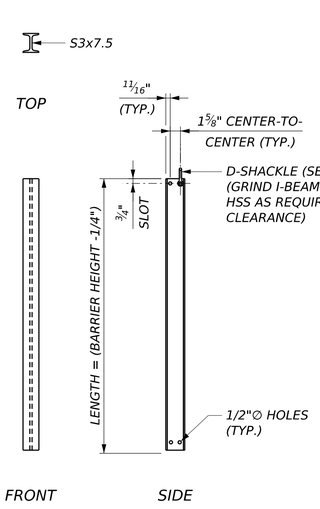

I-BEAM DETAILS

1" = 1'-0"

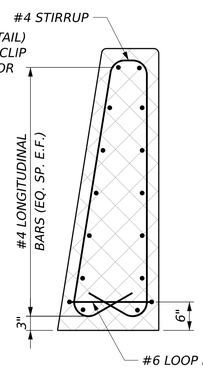

SECTION A-A (REINFORCEMENT)

3/4" = 1'-0"

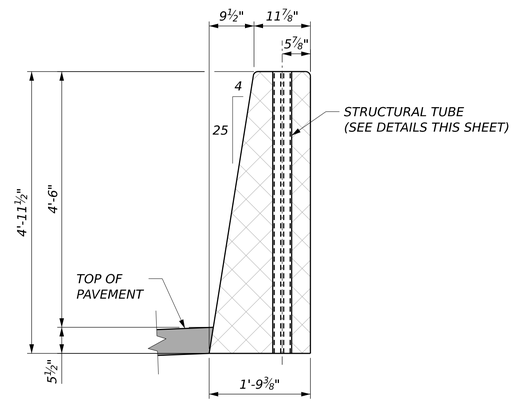

SECTION A-A (MASONRY)

3/4" = 1'-0"

Username: EBEAUSOLEIL Date: 11/19/2026

Scale: NOT TO SCALE

No.	Revision	By	Date

Designed by: HNTB

CONSULTANT PROJECT MANAGER: Daniel Bouchard, P.E.

	By	Date		By	Date
Designed	GLS	11/2026	Checked	BRG	11/2026
Drawn	ERB	11/2026	In Charge of	TRC	11/2026

HNTB CORPORATION
82 Running Hill Road, Suite 201
South Portland, ME 04106

TEL (207) 774-5155
FAX (207) 228-0909

MAINE TURNPIKE

THE GOLD STAR MEMORIAL HIGHWAY

MTA PROJECT MANAGER: Eric Barnes, P.E.

VARIABLE MESSAGE SIGN REPLACEMENT – VARIOUS LOCATIONS

MEDIAN BARRIER - TYPE C

SHEET NUMBER: BD-02

CONTRACT: 2026.23

Filename: z_Barrier Details.dgn

WIRING DIAGRAM GENERAL NOTES:

1. FURNISHING AND INSTALLING ALL ELECTRICAL AND COMMUNICATIONS WIRING ASSOCIATED WITH THE VMS INSTALLATION, INCLUDING TERMINATIONS AND CONNECTORS, SHALL BE INCIDENTAL TO THE VMS SIGN PAY ITEM.

2. THE CONTRACTOR SHALL SIZE ELECTRICAL CONDUCTORS BASED ON ACTUAL INSTALLED LENGTHS, CONNECTED LOADS, VOLTAGE DROP, AND INSTALLATION CONDITIONS, IN ACCORDANCE WITH THE NEC. ALL ELECTRICAL WIRING SHALL BE COPPER AWG XHHW-2 UNLESS OTHERWISE NOTED.

3. THE CONTRACTOR SHALL PROVIDE AND INSTALL A COMPLETE FIBER-OPTIC DEMARCATION AND TERMINATION ASSEMBLY WITHIN THE VMS SIGN CABINET AND VMS SIGN, INCLUDING SPLICE TRAYS, ADAPTERS, PATCH CORDS, AND ASSOCIATED HARDWARE COMPATIBLE WITH THE SPECIFIED FIBER AND EQUIPMENT.

4. CAT 6A COMMUNICATIONS CABLES SERVING THE RADIO ANTENNA AND CAMERA SHALL NOT BE ROUTED THROUGH THE VMS SIGN ENCLOSURE. ROUTE THESE CABLES IN CONDUIT EXTERNAL TO THE SIGN ENCLOSURE.

5. PROVIDE GROUNDING AND BONDING, EQUIPMENT, WIRING, CONNECTORS, AND APPURTENANCES WITHIN THE VMS SIGN CABINET NECESSARY FOR A COMPLETE AND OPERATIONAL SYSTEM.

6. REFER TO THE DAKTRONICS SIGN INFORMATION INCLUDED IN THE APPENDIX OF THE SPECIAL PROVISIONS. COORDINATE WIRING, CONNECTIONS, AND EQUIPMENT INTERFACES WITH THE MANUFACTURER'S REQUIREMENTS.

7. WIRING DIAGRAMS ARE SCHEMATIC. VERIFY FIELD CONDITIONS, ROUTING, CONDUCTOR LENGTHS, EQUIPMENT INTERFACES, AND TERMINATION REQUIREMENTS BEFORE INSTALLATION.

8. MAINTAIN SEPARATION BETWEEN POWER AND COMMUNICATIONS WIRING.

9. VERIFY THAT COPPER COMMUNICATIONS CABLE LENGTHS, INCLUDING PATCH CORDS, COMPLY WITH THE CONNECTED EQUIPMENT'S ETHERNET AND POE REQUIREMENTS. SUBMIT ANY PROPOSED CHANGES NEEDED TO MEET THESE REQUIREMENTS TO THE RESIDENT FOR REVIEW BEFORE INSTALLATION.

10. INSTALL CONDUITS ON THE RISER POLE USING NEW STANDOFF BRACKETS (REMOVE EXISTING BRACKETS). THE TURN-UP ELBOW AND FIRST 10 FEET OF VERTICAL CONDUIT SHALL BE GALVANIZED RIGID METAL CONDUIT. THE REMAINDER OF THE VERTICAL RISE SHALL BE SCHEDULE 80 PVC CONDUIT, WITH A WEATHERHEAD PROVIDED AT EACH CONDUIT TERMINATION. SPARE CONDUITS SHALL BE CAPPED AT GALVANIZED RIGID METAL CONDUIT.

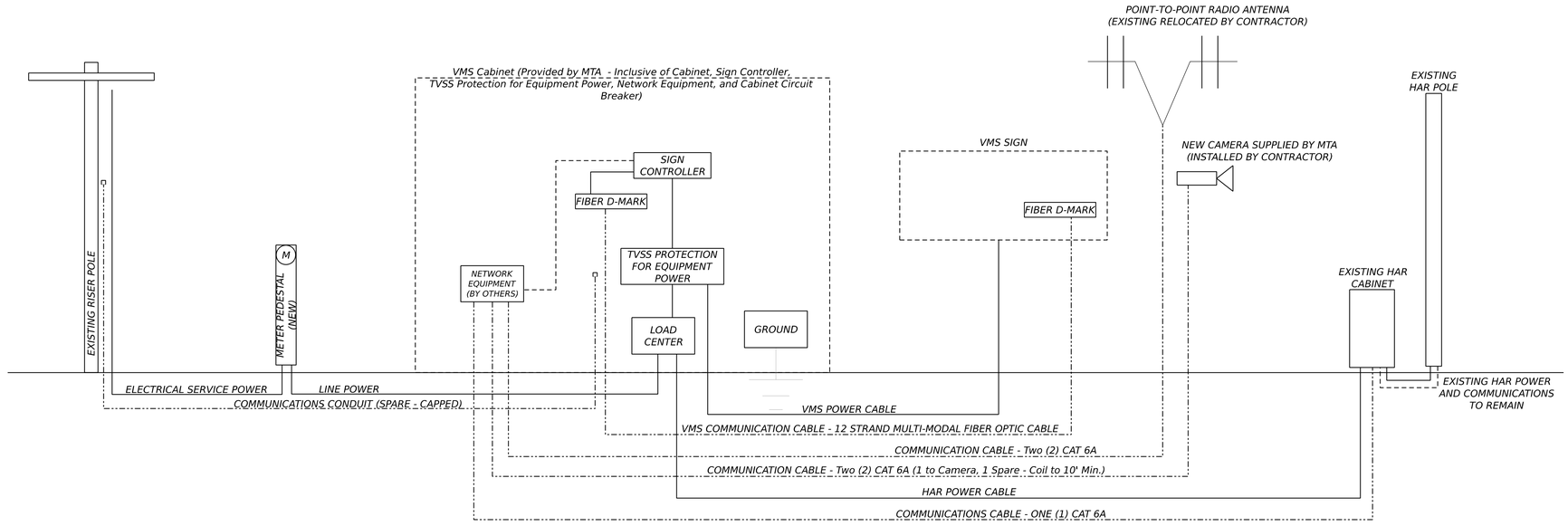

WIRING DIAGRAM
Cider Hill Road, MM 6.2

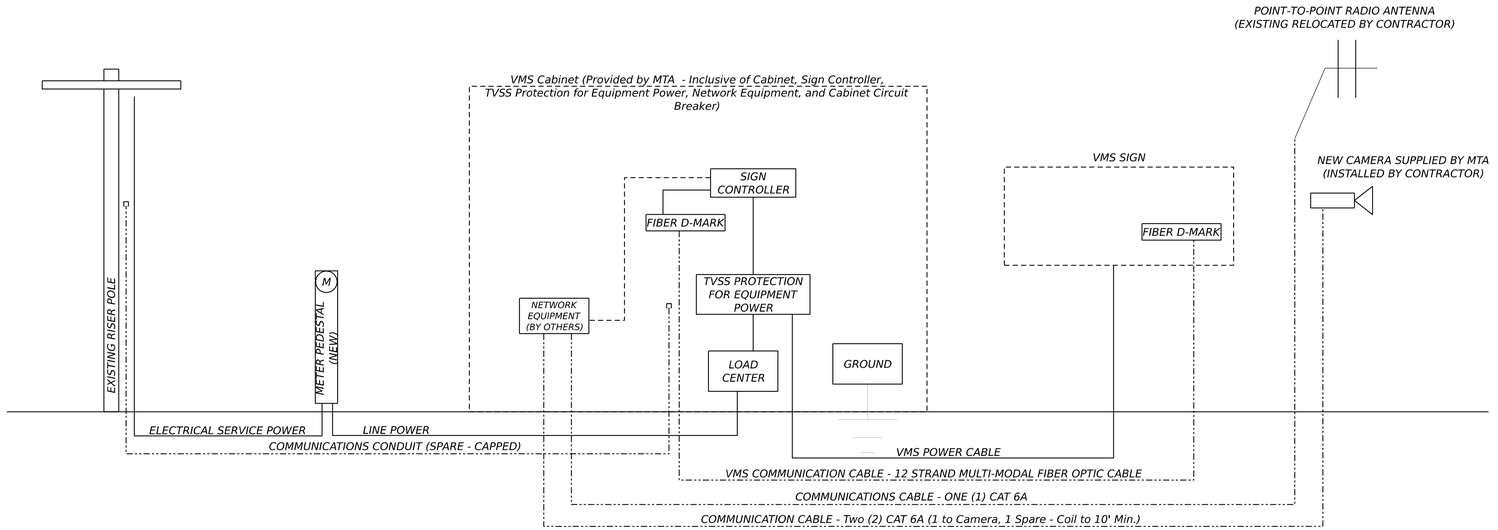

WIRING DIAGRAM
Limerick Road, MM 28.30

Username: EBEAUSOLEIL Date: 11/19/2026

Scale: NOT TO SCALE

No.	Revision	By	Date

Designed by: HNTB

CONSULTANT PROJECT MANAGER: Daniel Bouchard, P.E.

	By	Date		By	Date
Designed	WWL	11/2026	Checked	DGB	11/2026
Drawn	WWL	11/2026	In Charge of	TRC	11/2026

HNTB CORPORATION
82 Running Hill Road, Suite 201
South Portland, ME 04106

TEL (207) 774-5155
FAX (207) 228-0909

MAINE TURNPIKE

THE GOLD STAR MEMORIAL HIGHWAY

MTA PROJECT MANAGER: Eric Barnes, P.E.

VARIABLE MESSAGE SIGN REPLACEMENT – VARIOUS LOCATIONS

WIRING DIAGRAM - LOCATIONS I

SHEET NUMBER: E-01

CONTRACT: 2026.23

Filename: Detail_(Wiring Diagram).dgn

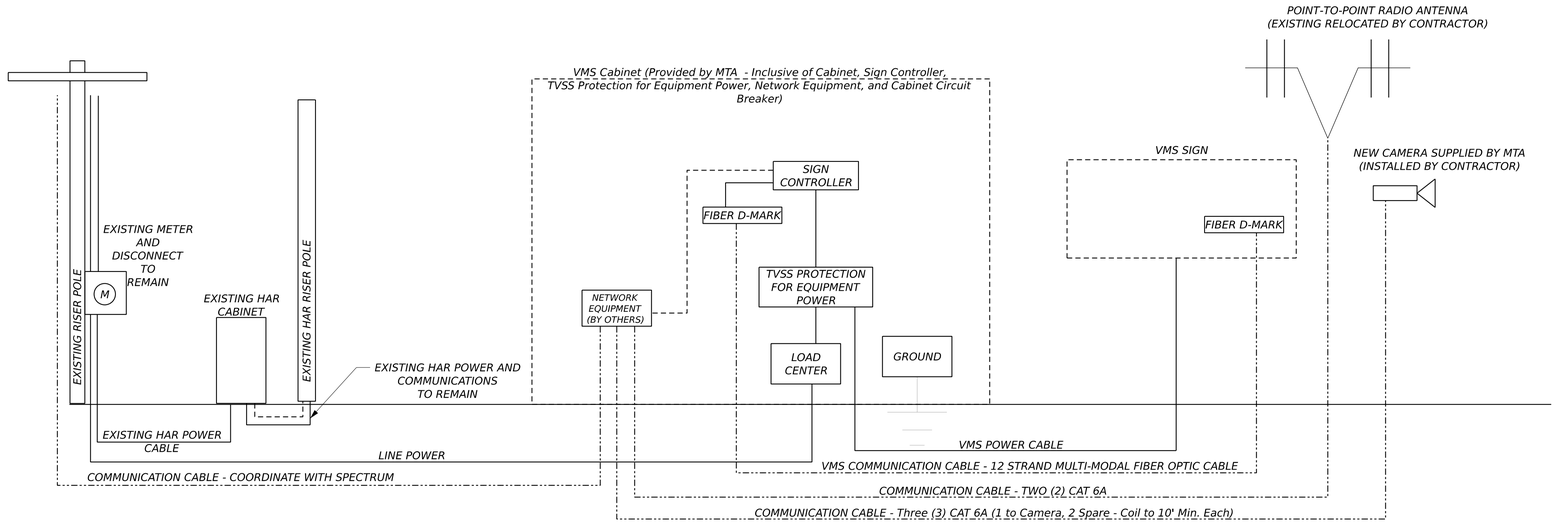

WIRING DIAGRAM
Holmes Road, MM 43.00

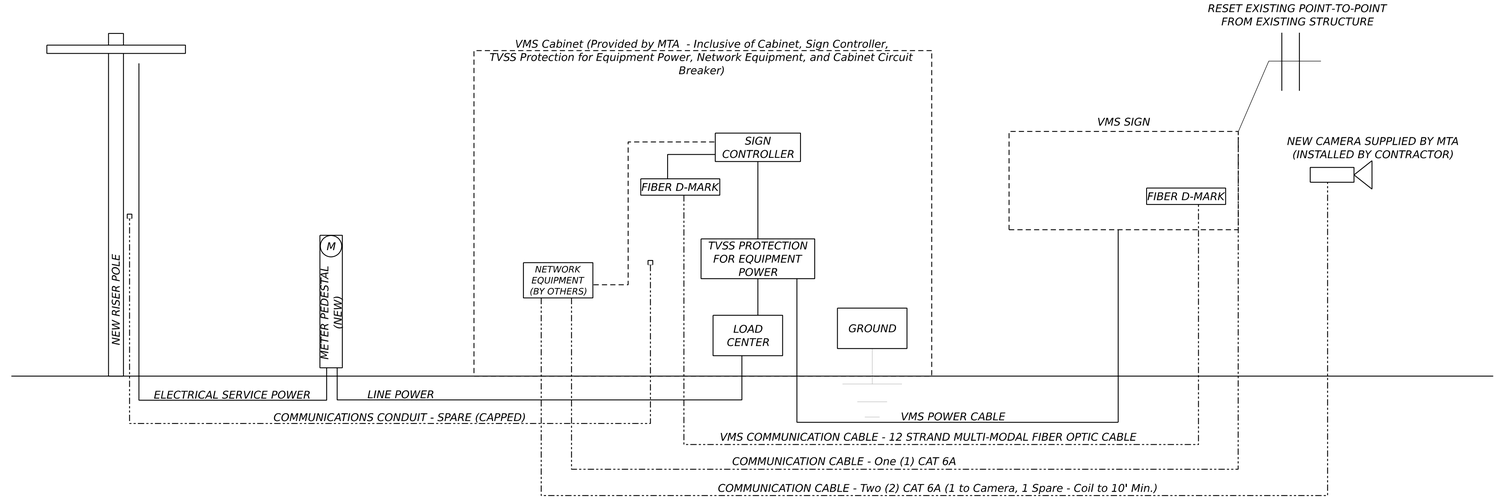

WIRING DIAGRAM
Mountain Road, MM 53.40

Username: EBEAUSOLEIL Date: 11/19/2026

Scale: NOT TO SCALE

No.	Revision	By	Date

Designed by: HNTB

CONSULTANT PROJECT MANAGER: Daniel Bouchard, P.E.

	By	Date		By	Date
Designed	WWL	11/2026	Checked	DGB	11/2026
Drawn	WWL	11/2026	In Charge of	TRC	11/2026

HNTB CORPORATION
82 Running Hill Road, Suite 201
South Portland, ME 04106

TEL (207) 774-5155
FAX (207) 228-0909

MAINE TURNPIKE

THE GOLD STAR MEMORIAL HIGHWAY

MTA PROJECT MANAGER: Eric Barnes, P.E.

VARIABLE MESSAGE SIGN REPLACEMENT – VARIOUS LOCATIONS

WIRING DIAGRAM - LOCATIONS II

SHEET NUMBER: E-02

CONTRACT: 2026.23

Filename: Detail_(Wiring Diagram).dgn

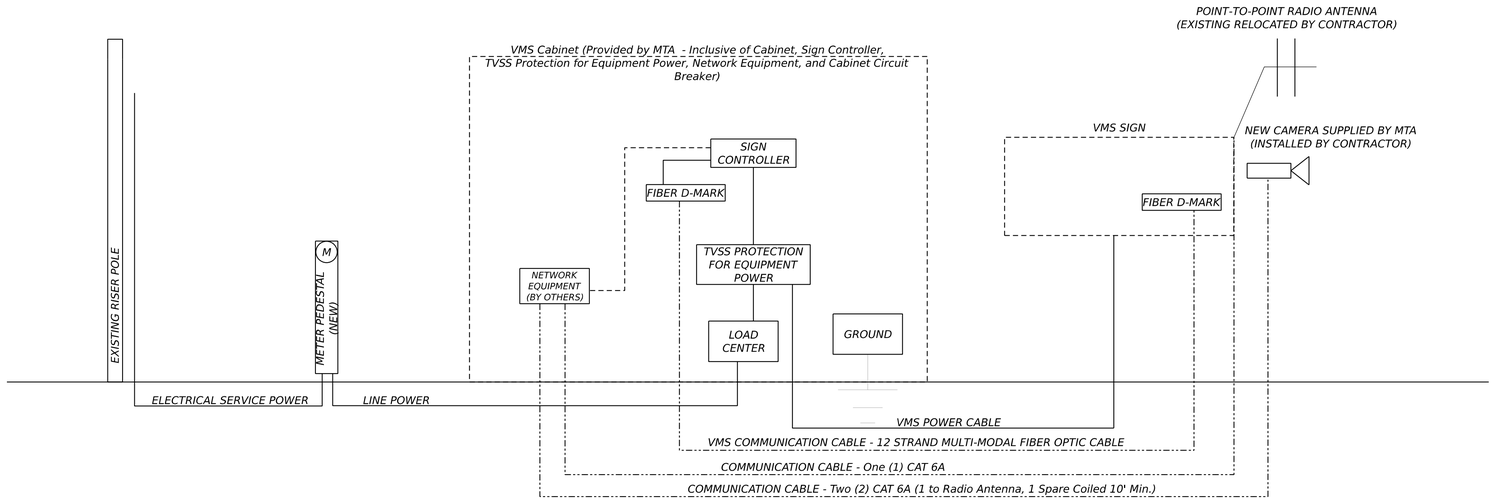

WIRING DIAGRAM

York, Exit 7

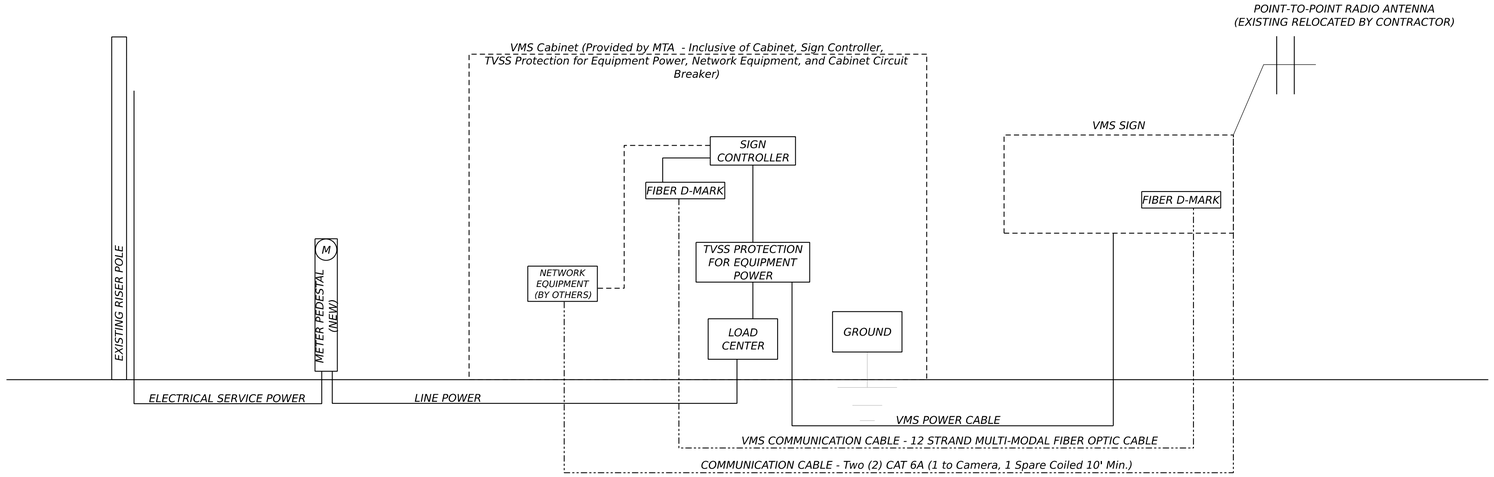

WIRING DIAGRAM

Wells, Exit 19 Eastbound

Username: EBEAUSOLEIL Date: 11/19/2026

Scale: NOT TO SCALE

No.	Revision	By	Date

Designed by: HNTB

CONSULTANT PROJECT MANAGER: Daniel Bouchard, P.E.

	By	Date		By	Date
Designed	WWL	11/2026	Checked	DGB	11/2026
Drawn	WWL	11/2026	In Charge of	TRC	11/2026

HNTB CORPORATION
82 Running Hill Road, Suite 201
South Portland, ME 04106

TEL (207) 774-5155
FAX (207) 228-0909

MAINE TURNPIKE

THE GOLD STAR MEMORIAL HIGHWAY

MTA PROJECT MANAGER: Eric Barnes, P.E.

VARIABLE MESSAGE SIGN REPLACEMENT – VARIOUS LOCATIONS

WIRING DIAGRAM - LOCATIONS III

SHEET NUMBER: E-03

CONTRACT: 2026.23

Filename: Detail_(Wiring Diagram).dgn

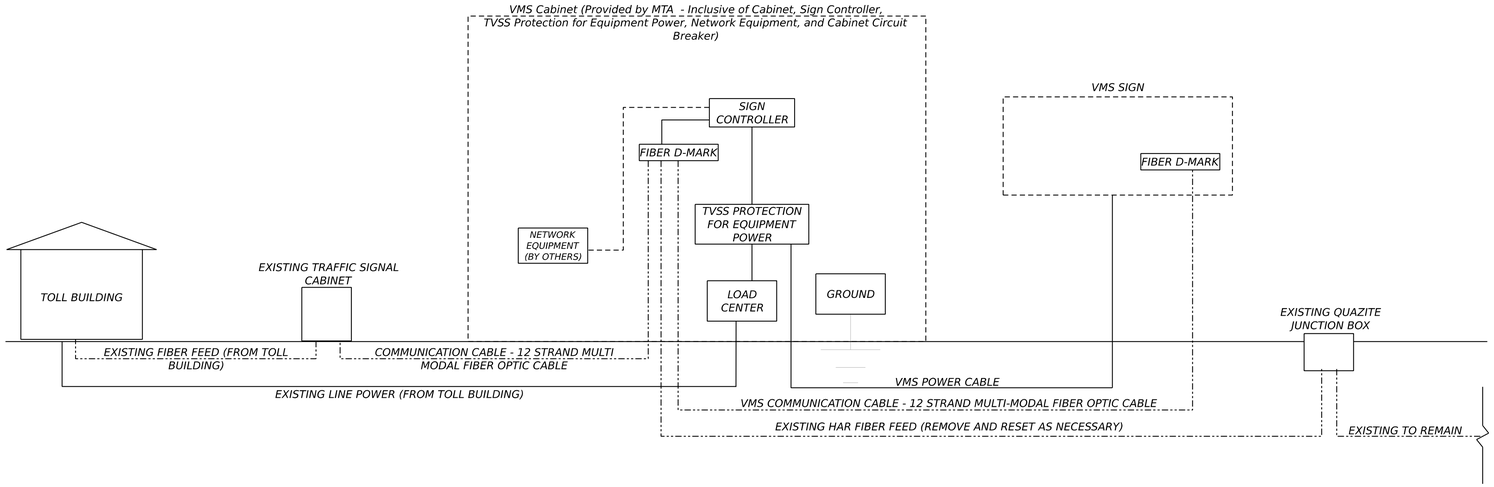

WIRING DIAGRAM

Wells, Exit 19 Westbound

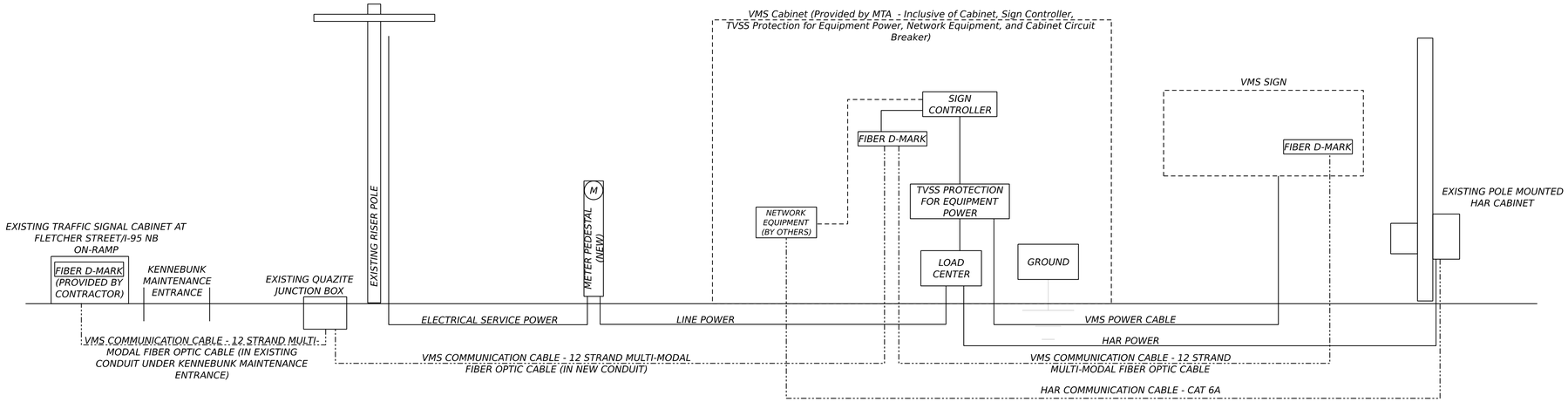

WIRING DIAGRAM

Kennebunk, Exit 25

Username: EBEAUSOLEIL Date: 11/19/2026

Scale: NOT TO SCALE

No.	Revision	By	Date

Designed by: HNTB

CONSULTANT PROJECT MANAGER: Daniel Bouchard, P.E.

	By	Date		By	Date
Designed	WWL	11/2026	Checked	DGB	11/2026
Drawn	WWL	11/2026	In Charge of	TRC	11/2026

HNTB CORPORATION
82 Running Hill Road, Suite 201
South Portland, ME 04106

TEL (207) 774-5155
FAX (207) 228-0909

MAINE TURNPIKE

THE GOLD STAR MEMORIAL HIGHWAY

MTA PROJECT MANAGER: Eric Barnes, P.E.

VARIABLE MESSAGE SIGN REPLACEMENT – VARIOUS LOCATIONS

WIRING DIAGRAM - LOCATIONS IV

SHEET NUMBER: E-04

CONTRACT: 2026.23

Filename: Detail_(Wiring Diagram).dgn

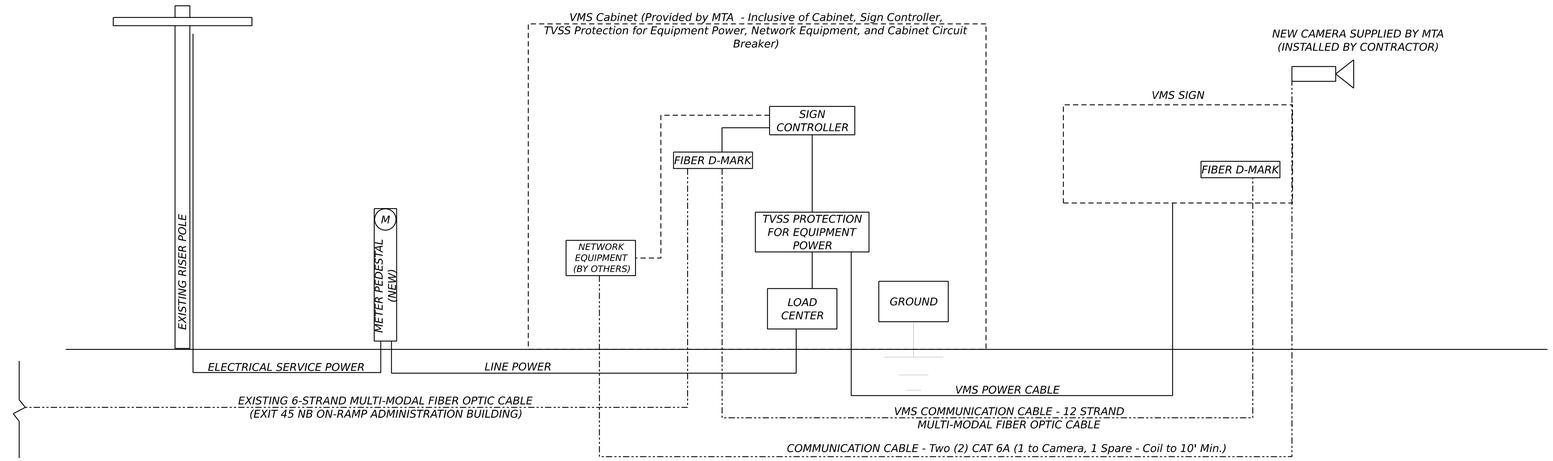

WIRING DIAGRAM

South Portland, Exit 45

Username: EBEAUSOLEIL Date: 11/19/2026

Scale: NOT TO SCALE

No.	Revision	By	Date

Designed by: HNTB

CONSULTANT PROJECT MANAGER: Daniel Bouchard, P.E.

	By	Date		By	Date
Designed	WWL	11/2026	Checked	DGB	11/2026
Drawn	WWL	11/2026	In Charge of	TRC	11/2026

HNTB CORPORATION
82 Running Hill Road, Suite 201
South Portland, ME 04106

TEL (207) 774-5155
FAX (207) 228-0909

MAINE TURNPIKE

THE GOLD STAR MEMORIAL HIGHWAY

MTA PROJECT MANAGER: Eric Barnes, P.E.

VARIABLE MESSAGE SIGN REPLACEMENT – VARIOUS LOCATIONS

WIRING DIAGRAM - LOCATIONS V

SHEET NUMBER: E-05

CONTRACT: 2026.23

Filename: Detail_(Wiring Diagram).dgn

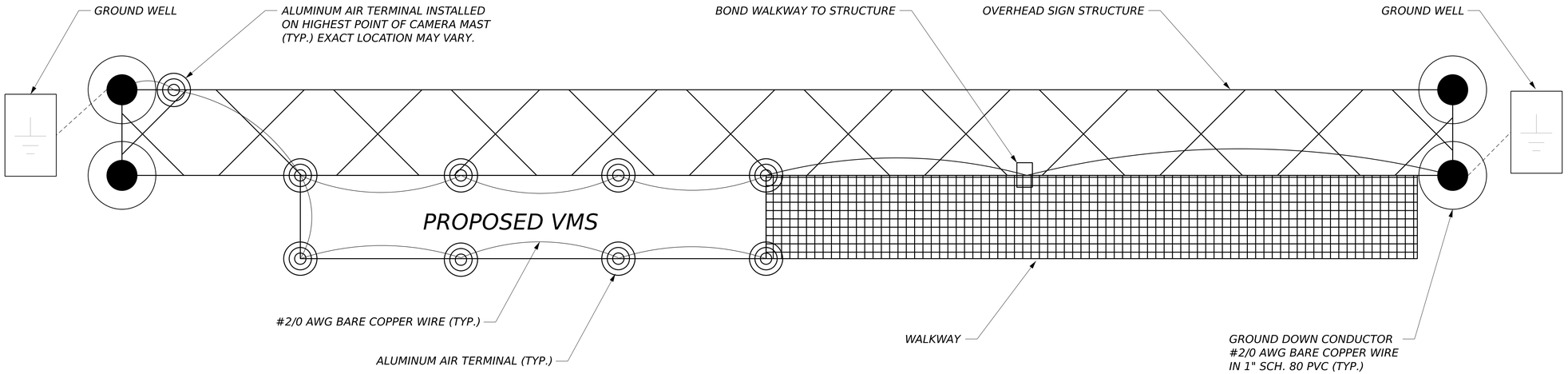

LIGHTNING PROTECTION

Overhead Sign Structures

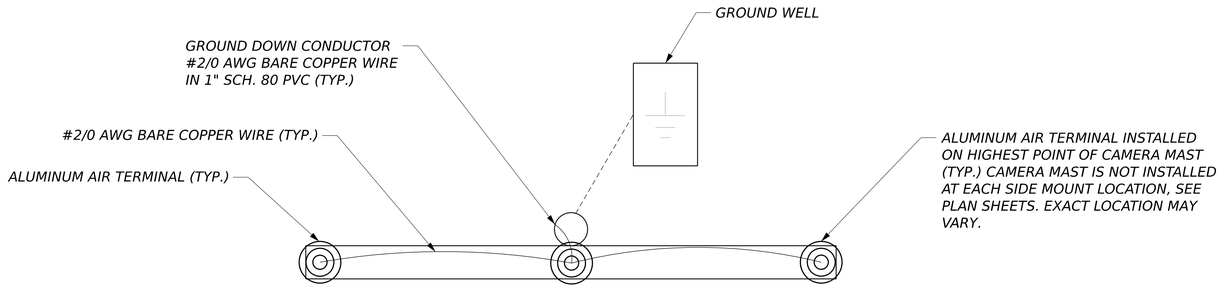

LIGHTNING PROTECTION

Side Mounted Sign Structures

Username: EBEAUSOLEIL Date: 11/19/2026

Scale: NOT TO SCALE

No.	Revision	By	Date

Designed by: HNTB

CONSULTANT PROJECT MANAGER: Daniel Bouchard, P.E.

	By	Date		By	Date
Designed	WWL	11/2026	Checked	DGB	11/2026
Drawn	WWL	11/2026	In Charge of	TRC	11/2026

HNTB CORPORATION
82 Running Hill Road, Suite 201
South Portland, ME 04106

TEL (207) 774-5155
FAX (207) 228-0909

MAINE TURNPIKE

THE GOLD STAR MEMORIAL HIGHWAY

MTA PROJECT MANAGER: Eric Barnes, P.E.

VARIABLE MESSAGE SIGN REPLACEMENT – VARIOUS LOCATIONS

LIGHTNING SUPPRESSION DETAILS I

SHEET NUMBER: L-01

CONTRACT: 2026.23

Filename: Lighting.dgn

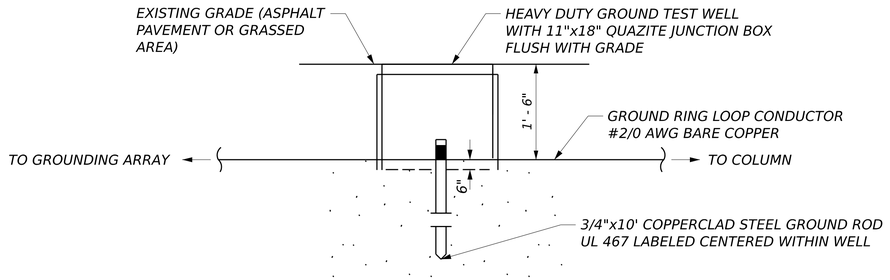

HEAVY DUTY GROUND TEST WELL DETAILS

GROUND TEST WELL NOTES

1. ALL GROUND ROD CONNECTIONS SHALL BE MADE USING CADWELD EXOTHERMIC WELDS.

LIGHTNING PROTECTION NOTES:

1. THE LIGHTNING PROTECTION SYSTEM SHOWN IS SCHEMATIC. THE CONTRACTOR SHALL PROVIDE A DELEGATED DESIGN THAT MEETS THE DESIGN INTENT SHOWN AND COMPLIES WITH UL 96A AND NFPA 780.

2. LIGHTNING PROTECTION COMPONENTS SHALL BE UL LISTED FOR THEIR INTENDED USE. THE COMPLETE INSTALLATION AT EACH LOCATION SHALL BE CERTIFIED BY LIGHTNING PROTECTION INSTITUTE (LPI) WITH A "LPI-IP MASTER INSTALLATION CERTIFICATE" COMPLIANT WITH NFPA 780.

3. COMPLETELY REMOVE THE EXISTING LIGHTNING PROTECTION SYSTEM AT EACH SIGN LOCATION.

4. REMOVAL OF THE EXISTING LIGHTNING PROTECTION SYSTEM AND FURNISHING AND INSTALLING ALL MATERIALS NECESSARY FOR A COMPLETE AND OPERATIONAL NEW SYSTEM, INCLUDING AIR TERMINALS, COPPER CONDUCTORS, GROUND TEST WELLS, CONNECTORS, AND ASSOCIATED APPURTENANCES, SHALL BE INCIDENTAL TO THE LIGHTNING PROTECTION PAY ITEM.

5. ROUTE NEW DOWN CONDUCTORS AS SHOWN. INSTALL DOWN CONDUCTORS IN SCHEDULE 80 PVC CONDUIT SECURELY ATTACHED TO THE STRUCTURE SUPPORT COLUMNS.

6. EACH GROUND TEST WELL SHALL CONSIST OF AN 18-INCH BY 11-INCH QUAZITE JUNCTION BOX WITH ONE ¾-INCH-DIAMETER BY 10-FOOT-LONG COPPER-CLAD STEEL GROUND ROD, UL 467 LISTED, CENTERED WITHIN THE WELL, EXTENDING VERTICALLY INTO THE EARTH.

7. CONDUCTOR BENDS SHALL HAVE AN INCLUDED ANGLE OF NOT LESS THAN 90 DEGREES AND A BEND RADIUS OF NOT LESS THAN 8 INCHES.

8. AT THE EXISTING SIDE-MOUNTED VARIABLE MESSAGE SIGN (VMS) LOCATIONS ON THE EXIT 53 ON-RAMP IN FALMOUTH AND THE EXIT 32 ON-RAMP IN BIDDEFORD, THE CONTRACTOR SHALL REMOVE THE EXISTING LIGHTNING SUPPRESSION SYSTEM AND FURNISH AND INSTALL A NEW LIGHTNING PROTECTION SYSTEM AT EACH LOCATION. THE EXISTING VMS UNITS, SUPPORT STRUCTURES, CONTROLLER CABINETS, AND ASSOCIATED WIRING AND EQUIPMENT SHALL REMAIN IN PLACE, EXCEPT FOR COMPONENTS OF THE EXISTING LIGHTNING SUPPRESSION SYSTEM.

Username: EBEAUSOLEIL Date: 11/19/2026

Scale: NOT TO SCALE

No.	Revision	By	Date

Designed by: HNTB

CONSULTANT PROJECT MANAGER: Daniel Bouchard, P.E.

	By	Date		By	Date
Designed	WWL	11/2026	Checked	DGB	11/2026
Drawn	WWL	11/2026	In Charge of	TRC	11/2026

HNTB CORPORATION
82 Running Hill Road, Suite 201
South Portland, ME 04106

TEL (207) 774-5155
FAX (207) 228-0909

MAINE TURNPIKE

THE GOLD STAR MEMORIAL HIGHWAY

MTA PROJECT MANAGER: Eric Barnes, P.E.

VARIABLE MESSAGE SIGN REPLACEMENT – VARIOUS LOCATIONS

LIGHTNING SUPPRESSION DETAILS II

SHEET NUMBER: L-02

CONTRACT: 2026.23

Filename: Lighting.dgn