Contract 2014.07
Superstructure Replacement
Litchfield Road Underpass
Mile 106.90
Vaughn Brook Culvert Repair
Mile 106.94
Potters Brook Culvert Repair
Mile 96.6

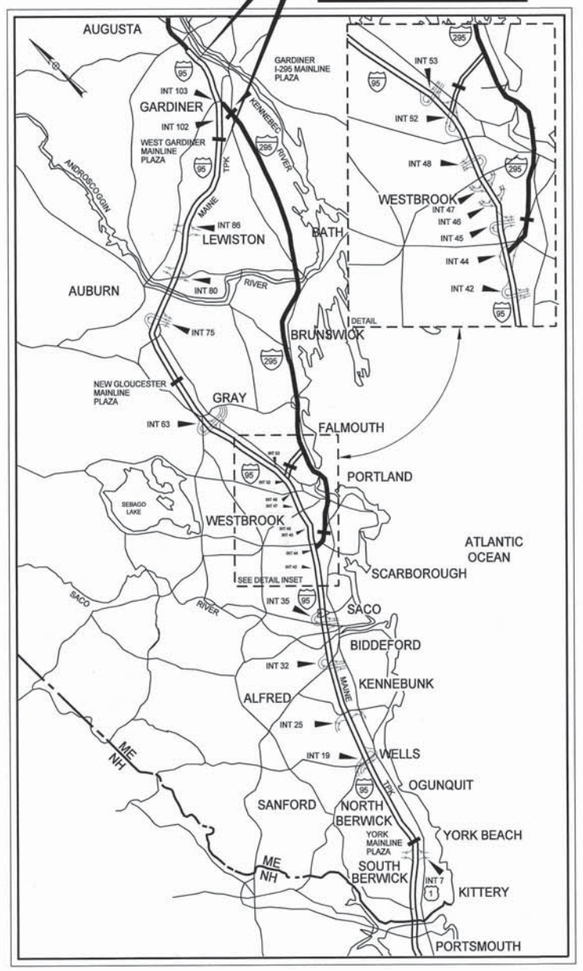

LOCATION MAP

MAINE TURNPIKE

THE GOLD STAR
MEMORIAL HIGHWAY

MAINE TURNPIKE AUTHORITY

DANIEL E. WATHEN, CHAIR
DIANE M. DOYLE, VICE CHAIR
GERARD P. CONLEY, SR., MEMBER
JAMES F. CLOUTIER, MEMBER
JOHN E. DORITY, MEMBER
ROBERT D. STONE, MEMBER
BRUCE A. VAN NOTE, MEMBER EX-OFFICIO

S. PETER MILLS, EXECUTIVE DIRECTOR

CONTRACT 2014.07
SUPERSTRUCTURE REPLACEMENT
LITCHFIELD ROAD UNDERPASS
MILE 106.90

VAUGHN BROOK CULVERT REPAIR
MILE 106.94

POTTERS BROOK CULVERT REPAIR
MILE 96.6

INDEX OF SHEETS

SHEET NO.	DESCRIPTION
1	Title Sheet
2	Estimated Quantities and Earthwork
3	General Notes
4	Typical Sections
5	Typical Details
6	Fencing Details
7 to 8	General Plan (2 Sheets)
9	Profile
10 to 14	Cross Sections (5 Sheets)
15 to 16	Erosion & Sediment Control Plan (2 Sheets)
17 to 18	Disturbance Impact Plan (2 Sheets)
19	Detour Plan and Sign Summary
20 to 21	Work Zone Plans (2 Sheets)
22	Bridge Plan and Elevation
23	Bridge Survey Layout Plan
24	Abutment 1 Removal and Repair
25	Abutment 1 Modifications
26	Abutment 1 Reinforcement
27	Abutment 2 Removal and Repair
28	Abutment 2 Modifications
29	Abutment 2 Reinforcement
30	Abutment Wingwalls
31	Pier 1 Repair and Modifications
32	Pier 2 Repair and Modifications
33	Pier 3 Repair and Modifications
34	Pier Cap Reinforcing Details
35	Abutment Bearing Details
36	Pier 1 and 2 Bearing Details
37	Pier 3 Bearing Details
38	Superstructure Section
39	Framing Plan and Girder Elevation
40	Diaphragm Details
41	Field Splice and Stress Diagram
42	Miscellaneous Steel Details
43	Table of Deflections and Bottom of Slab Elevations
44	Camber Ordinates and Diagram
45 to 46	Deck Reinforcement (2 Sheets)
47	Strip Seal Expansion Joint
48	Bridge Rail Details
49	Bridge Rail Transition
50	Snow Fence Details
51	Reinforcing Steel Schedule
52	Right of Way Map
53 to 54	Vaughn Brook Culvert Repair (2 Sheets)
55 to 56	Potters Brook Culvert Repair (2 Sheets)
57 to 70	As-Builts and Standard Details (14 Sheets)

Contract 2014.07

APPROVED:

MAINE TURNPIKE AUTHORITY

Peter S. Merfeld — 12/17/13
PETER S. MERFELD, P.E. - CHIEF OPERATIONS OFFICER — DATE

Stephen R. Tantre — 12/17/13
STEPHEN R. TANTRE, P.E., - DIRECTOR OF ENGINEERING & BUILDING MAINTENANCE — DATE

STATE OF MAINE
TIMOTHY S. BRYANT
No. 12090
LICENSED
PROFESSIONAL ENGINEER

VHB Vanasse Hangen Brustlin, Inc.

Timothy S. Bryant — 12-13-2013
Timothy S. Bryant, P.E.
Consultant Project Manager
DATE

Date:12/13/2013

Filename: ...\st\planset\001_title_01.dgn

ESTIMATED QUANTITIES						
ITEM NO.	DESCRIPTION	LITCHFIELD ROAD	VAUGHN BROOK	POTTERS BROOK	QUANTITY	UNIT
202.1	Removing Existing Superstructure - Property of Contractor	1			1	LS
202.17	Removing Existing Structural Concrete (35 CY)*	1			1	LS
202.202	Removing Pavement Surface	120			120	SY
203.2	Common Excavation	965			965	CY
203.24	Common Borrow	910			910	CY
203.25	Granular Borrow	100			100	CY
304.1	Aggregate Subbase Course - Gravel	440			440	CY
403.21	Hot Mix Asphalt, 9.5 mm Nominal Maximum Size	215			215	TON
403.213	Hot Mix Asphalt, 12.5 mm Nominal Maximum Size, Base	175			175	TON
409.15	Bituminous Tack Coat, Applied	50			50	GAL
419.3	Sawing Bituminous Pavement	45			45	LF
502.21	Structural Concrete, Abutments and Retaining Walls	45			45	CY
502.23	Structural Concrete, Piers	25			25	CY
502.26	Structural Concrete Superstructure Slab on Steel Bridges (165 CY)*	1			1	LS
502.49	Structural Concrete Curbs and Sidewalks (32 CY)*	1			1	LS
503.12	Reinforcing Steel, Fabricated and Delivered	600			600	LB
503.13	Reinforcing Steel, Placing	600			600	LB
503.14	Epoxy-Coated Reinforcing Steel, Fabricated and Delivered	69900			69900	LB
503.15	Epoxy-Coated Reinforcing Steel, Placing	69900			69900	LB
504.702	Structural Steel Fabricated and Delivered, Welded (106,000 LB)*	1			1	LS
504.71	Structural Steel Erection (106,000 LB)*	1			1	LS
505.09	Stud Welded Shear Connectors (2680 EA)*	1			1	LS
506.9102	Zinc-Rich Coating System (Shop Applied)	1			1	LS
507.0821	Steel Bridge Railing, 3 Bar (476 LF)*	1			1	LS
508.14	High Performance Waterproofing Membrane (655 SY)*	1			1	LS
511.07	Cofferdam		1		1	LS
514.06	Curing Box for Concrete Cylinders	1			1	EA
515.201	Pigmented Protective Coating for Concrete Surfaces	345			345	SY
515.202	Clear Protective Coating for Concrete Surfaces	400	41	29	470	SY
518.15	Culvert Surface Patch Repair - Above Waterline		515	32	547	SF
518.16	Culvert Surface Patch Repair - Below Waterline			13	13	SF
518.41	Epoxy Injection Crack Repair - Above Waterline		114	49	163	LF
518.42	Epoxy Injection Crack Repair - Below Waterline			35	35	LF
518.6313	Abutment and Bridge Seat Repairs	20			20	SF
518.6314	Pier Repairs	75			75	SF
520.21	Expansion Device - Gland Seal	1			1	EA
523.52	Bearing Installation	20			20	EA
523.5401	Laminated Elastomeric Bearings, Fixed	4			4	EA
523.5404	PTFE Elastomeric Bearings, Expansion	16			16	EA
524.4	Protective Shielding - Steel Girders	900			900	SY
526.3	Temporary Concrete Barrier, Type I	1			1	LS
527.34	Work Zone Crash Cushions - TL-3	2			2	UNIT
606.1728	W-beam to 3-bar Bridge Rail Transition	4			4	EA
606.178	Guardrail Beam	213			213	LF
606.24	Guardrail Type 3d - Single Rail	150			150	LF
606.265	Terminal End - Single Rail - Galvanized Steel	2			2	EA
606.356	Permanent Flexible Delineator Post	4			4	EA
606.3605	Guardrail - Remove, Modify and Reset, Single Rail	549			549	LF
606.3631	Guardrail - Remove and Dispose	340			340	LF
606.471	Single Offset Block - W-Beam	125			125	EA
606.48	Single Galvanized Steel Post	8			8	EA
607.09	Woven Wire Fence - Metal Posts	50			50	LF
607.1631	Snow Fence	188			188	LF
607.17	Chain Link Fence - 6 Foot	340			340	LF
607.23	Chain Link Fence Gate	2			2	EA
607.32	Bracing Assembly Type I - Metal Posts	15			15	EA
607.33	Bracing Assembly Type II - Metal Posts	3			3	EA
609.11	Vertical Curb - Type I	78			78	LF
610.08	Plain Riprap		190	255	445	CY
610.18	Stone Ditch Protection	55			55	CY
610.181	Temporary Stone Check Dam	2			2	CY
613.319	Erosion Control Blanket	1140			1140	SY
615.07	Loam	170			170	CY
618.1411	Seeding Method Number 3, Plan Quantity	14			14	UNIT
619.1201	Mulch, Plan Quantity	14			14	UNIT
619.1202	Temporary Mulch (4500 lbs)*		1		1	LS
619.1401	Erosion Control Mix	25			25	CY
620.58	Erosion Control Geotextile	181			181	SY
627.712	4 Inch White or Yellow Pavement Marking Line	1400			1400	LF
629.05	Hand Labor, Straight Time	60	10	10	80	HR
631.1	Air Compressor (Including Operator)		5		5	HR
631.11	Air Tool (Including Operator)		5		5	HR

ESTIMATED QUANTITIES						
ITEM NO.	DESCRIPTION	LITCHFIELD ROAD	VAUGHN BROOK	POTTERS BROOK	QUANTITY	UNIT
631.12	All Purpose Excavator (Including Operator)	10	5		15	HR
631.171	Truck - Small (Including Operator)	20	5		25	HR
631.18	Chain Saw Rental (Including Operator)		5		5	HR
631.36	Foreman	20	10		30	HR
645.106	Demount Regulatory, Warning, Confirmation & Route Marker Assembly Sign	2			2	EA
645.116	Reinstall Regulatory, Warning, Confirmation and Route Marker Sign	2			2	EA
645.135	Bridge Overpass - Mounted Sign Support	4			4	EA
652.30	Flashing Arrow Board	2		1	3	EA
652.312	Type III Barricades	9			9	EA
652.33	Drum	96		48	144	EA
652.35	Construction Signs	1251		1014	2265	SF
652.361	Maintenance of Traffic Control Devices	1			1	LS
652.381	Traffic Officer	50			50	HR
652.41	Portable Changeable Message Sign	2			2	EA
652.45	Truck Mounted Attenuator		100		100	CD
656.5	Baled Hay, In Place	20			20	EA
656.632	30 inch Temporary Silt Fence	1565	355	515	2435	LF
656.64	Boom Supported Floating Silt Fence		205	260	465	LF
659.10	Mobilization		1		1	LS

* Quantities are Estimated Only

EARTHWORK SUMMARY - LITCHFIELD ROAD

COMMON EXCAVATION FOR ESTIMATE

	Litchfield Road
Common Excavation	55 CY
Grubbing in Fill	691 CY
Pavement Removal	219 CY
Subtotal	965 CY
Total Common Excavation	965 CY

AVAILABLE COMMON EXCAVATION FOR BORROW CALCULATIONS

	Litchfield Road
(1) Total Common Excavation	965 CY
Deductions:	
Grubbing	691 CY
Existing Pavement Removal	219 CY
(2) Total Deductions:	910 CY
Total Available Common Excavation	55 CY
Total Available Structural Excavation	100 CY
Total Available Non-Rock Excavation	155 CY

FILL FOR BORROW CALCULATIONS

	Litchfield Road
Common Fill (From Cross Section)	910 CY
Subtotal	910 CY
Total Fill	910 CY

COMPUTATION OF COMMON BORROW FOR ESTIMATE

	Litchfield Road
(3) Total Fill	910 CY
Total Available Non-Rock Excavation	155 CY
(4) Total Available Excavation	155 CY
(5) Total Deficit	755 CY

Date:12/19/2013

Filename: ...\cad\st\planset\002_qnty_01.dgn

Scale: AS NOTED

No.	Revision	By	Date

Designed by:

VHB Vanasse Hangen Brustlin, Inc.

CONSULTANT PROJECT MANAGER: T. Bryant

	By	Date		By	Date
Designed	KZS	12/13	Checked	SMH	12/13
Drawn	CMD	12/13	In Charge of	TSB	12/13

VANASSE HANGEN BRUSTLIN, INC.
500 Southborough Dr.
Suite 105B
South Portland, ME 04106
TEL (207) 889-3150
FAX (207) 253-5596

MAINE TURNPIKE

THE GOLD STAR MEMORIAL HIGHWAY

MTA PROJECT MANAGER: Ralph C. Norwood IV

SUPERSTRUCTURE REPLACEMENT
LITCHFIELD ROAD UNDERPASS

ESTIMATED QUANTITIES AND EARTHWORK

SHEET NUMBER: 2

CONTRACT:2014.07

GENERAL CONSTRUCTION NOTES

1. All details shall be in conformance with Maine Department of Transportation (MaineDOT) Standard Details Highways and Bridges latest revision, and MaineDOT Best Management Practices for Erosion and Sediment Control latest revision unless otherwise included in these plans.

2. During construction, the road will be closed to traffic for a time period specified in the Special Provisions.

3. For construction limits and right of way lines, refer to General Plan. There are no permanent or temporary easements associated with this project. All work must be completed within the existing Right of Way.

4. Chain link fence gates shall be 3 feet wide single gates. A gate shall be located on each side of the turnpike roadway. Exact location of the gate shall be determined in the field by the Resident.

5. Connections to existing fence shall be incidental to the proposed fence items.

6. Existing ROW fence within the limits of work, as shown on the plans or as directed by the Resident, shall be removed and disposed. This work shall be incidental to the proposed fence items.

7. The Contractor shall submit his proposed staging area(s) and field trailer location to the Resident for approval prior to starting work.

8. All portions of the existing bridge superstructure are to be removed by and become the property of the Contractor, excluding the bearings which shall be delivered to the MTA Gardiner Maintenance yard. The steel portions of the existing bridge are coated with a lead-based paint system. The Contractor is responsible for the containment, proper management and disposal of all lead-contaminated hazardous waste generated by the process of demolishing the bridge.

9. Milling of existing pavement shown at end of project shall be paid under Item 202.202 Removing Pavement Surface.

10. For additional details referenced or not shown in these drawings, see the State of Maine, Department of Transportation Standard Details, Highways and Bridges, December 2002 with updates.

11. Copies of the As-Built plans are included in this contract for the Contractor's convenience. The completeness and accuracy of these plans is not guaranteed.

12. Chamfer all exposed concrete edges ¾" unless otherwise noted.

13. The proposed elevations are based on the NAVD 88 datum. The as-built plans are based on NGVD 29 datum.

14. The Contractor shall take all precautions necessary to avoid impacts to delineated wetland areas shown in these plans including ditches adjacent to Piers 1 and 3.

15. Existing timber gutters in front of the abutments shall be removed as directed by the Resident. The gutter slope pipe in front of Abutment No. 2 shall be removed. Payment will be considered incidental to Contract Items, see Special Provision section 202.

EARTHWORK NOTES

1. The clearing limits shall be 5' beyond and parallel to construction slope lines or as shown on the plans. The exact limits will be established in the field by the Resident. All clearing shall be within the existing ROW. Payment for clearing will be considered incidental to Contract items.

2. Individual trees within the slope limit lines or called to be removed on the plans shall be removed and disposed. This work shall be incidental to the contract.

3. Do not excavate for Aggregate Subbase Course where existing material is suitable as determined by the Resident.

4. Existing pavement removal in fill areas will be paid for under Item 203.20, Common Excavation. Shim material required for these areas below the subbase will be paid under Item 304.10, Aggregate Subbase Course - Gravel or Item 203.24, Common Borrow as shown in the typical section.

ABUTMENT NOTES

1. Reinforcing steel shall have a minimum concrete cover of 2 inches in walls.

2. Cover joints where waterstops are not required in accordance with Standard Detail 502(01).

3. Abutments and wingwalls shall be backfilled with Granular Borrow as shown in the plans.

GUARDRAIL NOTES

1. Composite offset blocks shall be used with guardrail type 3d.

2. Connections for proposed guardrail to existing guardrail shall be incidental to the proposed guardrail items.

3. Contractor shall stockpile all guardrail to be removed and reset, removed and disposed and removed, modified and reset until guardrail installation has been complete. Stockpiling the guardrail shall be incidental to item 606.3631 Guardrail - Remove and Dispose. All usable existing guardrail as determined by the Resident shall be modified and reset prior to being paid to install new guardrail.

4. At the end of each work day, all guardrail within work areas accessible to traffic shall have an approved crashworthy end treatment.

5. Existing bridge transition rail shall be removed and delivered to MTA Highway Maintenance. Delivering transition rail to MTA shall be incidental to Item 606.1728.

EROSION CONTROL NOTES

1. The anticipated erosion control devices are shown on the plans. The Contractor shall propose actual type and location of devices for approval by the Resident. Additional devices may be proposed by the Contractor to implement additional measures. Any additional measures approved by the Resident will be measured for payment.

2. Temporary seed shall be applied to all disturbed areas that will not be completed within 30 days.

3. All temporary and permanent erosion control devices shall be installed in accordance with the Maine Department of Transportation Best Management Practices.

4. Temporary stone check dams shall be installed in accordance with the Maine Department of Transportation Best Management Practices.

5. Erosion Control Blanket, Item 613.319 shall be installed on 2:1 slopes from the top to toe of slope. Loam and seed shall be placed prior to the installation of the erosion control blanket.

6. Place loam 4 inches deep on all new or reconstructed sideslopes or as directed by the Resident.

7. Newly disturbed earth shall be mulched by the end of each work day. Mulch shall be maintained daily. This work shall be paid under Item 619.1202 Temporary Mulch.

UTILITY NOTES

1. Existing utilities on these plans were compiled from field survey and various other sources. Locations are not guaranteed to be accurate nor is it guaranteed that all utilities are shown. No separate or additional compensation will be allowed to the Contractor due to any variance between the data shown on the plans and the actual field conditions encountered. No work shall be started until the owners of the various utilities are notified by the Contractor of the proposed construction. The Contractor shall contact Dig Safe (1-888-DIG-SAFE or 811) prior to starting work. In addition, Dig Smart of Maine shall be contacted prior to starting any work within MTA right-of-way. Contractor shall be responsible for any costs. Proof of utility location from both Dig Safe and Dig Smart (when applicable) shall be submitted prior to the commencement of any work.

2. All utility facilities shall be adjusted by the respective utilities unless noted.

3. The utilities involved in this contract are:
   - Central Maine Power (CMP)
   - Fairpoint Communications
   - Time Warner Cable

DRILLED AND ANCHORED BOLTS AND REINFORCING STEEL NOTES

1. The anchoring material shall be one of the products on the Maine Department of Transportation Prequalified List. Installation shall be in accordance with the Manufacturer's recommendations.

2. Drilling and grouting shall be incidental to Items 503.13 and 503.15.

Date:12/13/2013

Filename: ...\planset\003_gen_notes_01.dgn

Scale: AS NOTED

No.	Revision	By	Date

Designed by:

Vanasse Hangen Brustlin, Inc.

CONSULTANT PROJECT MANAGER: T. Bryant

	By	Date		By	Date
Designed	KZS	12/13	Checked	SMH	12/13
Drawn	CMD	12/13	In Charge of	TSB	12/13

VANASSE HANGEN BRUSTLIN, INC.
500 Southborough Dr.
Suite 105B
South Portland, ME 04106
TEL (207) 889-3150
FAX (207) 253-5596

MAINE TURNPIKE

THE GOLD STAR MEMORIAL HIGHWAY

MTA PROJECT MANAGER: Ralph C. Norwood IV

SUPERSTRUCTURE REPLACEMENT
LITCHFIELD ROAD UNDERPASS

GENERAL NOTES

SHEET NUMBER: 3

CONTRACT:2014.07

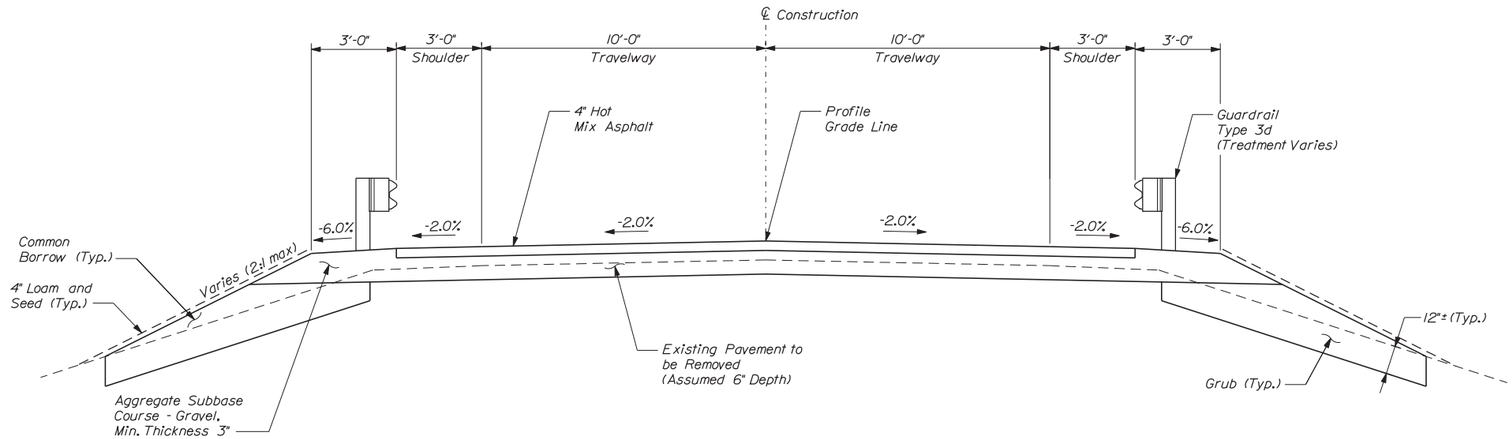

TYPICAL ROADWAY APPROACH SECTION

Scale: 3/8" = 1'-0"

HMA NOTE

Hot Mix Asphalt - Approaches
Surface: 1 1/2" HMA (9.5 mm)
Base: 2 1/2" HMA (12.5 mm)

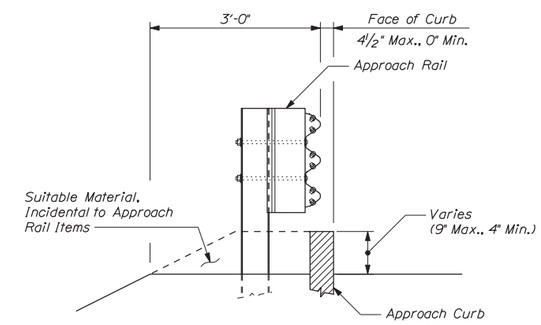

TYPICAL SECTION AT APPROACH RAIL

Scale: 3/4" = 1'-0"

TYPICAL SECTION NOTES:

1. The pavement and subbase depths as shown on the plans are nominal.
2. Crowns for all courses of subbase and pavement shall be straight.
3. All necessary pavement cutting shall be sawcut and done in such a manner as to leave a clean vertical face.
4. Bituminous tack coat is required between all lifts of pavement and on all existing paved or milled surfaces prior to placing proposed pavement or as directed by the Resident.

Date:12/13/2013

Filename: ...\cad\st\planset\004_typ.dgn

Scale: AS NOTED

No.	Revision	By	Date

Designed by:

Vanasse Hangen Brustlin, Inc.

CONSULTANT PROJECT MANAGER: T. Bryant

	By	Date		By	Date
Designed	KZS	12/13	Checked	SMH	12/13
Drawn	CMD	12/13	In Charge of	TSB	12/13

VANASSE HANGEN BRUSTLIN, INC.
500 Southborough Dr.
Suite 105B
South Portland, ME 04106
TEL (207) 889-3150
FAX (207) 253-5596

MAINE TURNPIKE

THE GOLD STAR MEMORIAL HIGHWAY

MTA PROJECT MANAGER: Ralph C. Norwood IV

SUPERSTRUCTURE REPLACEMENT
LITCHFIELD ROAD UNDERPASS

TYPICAL SECTIONS

SHEET NUMBER: 4

CONTRACT:2014.07

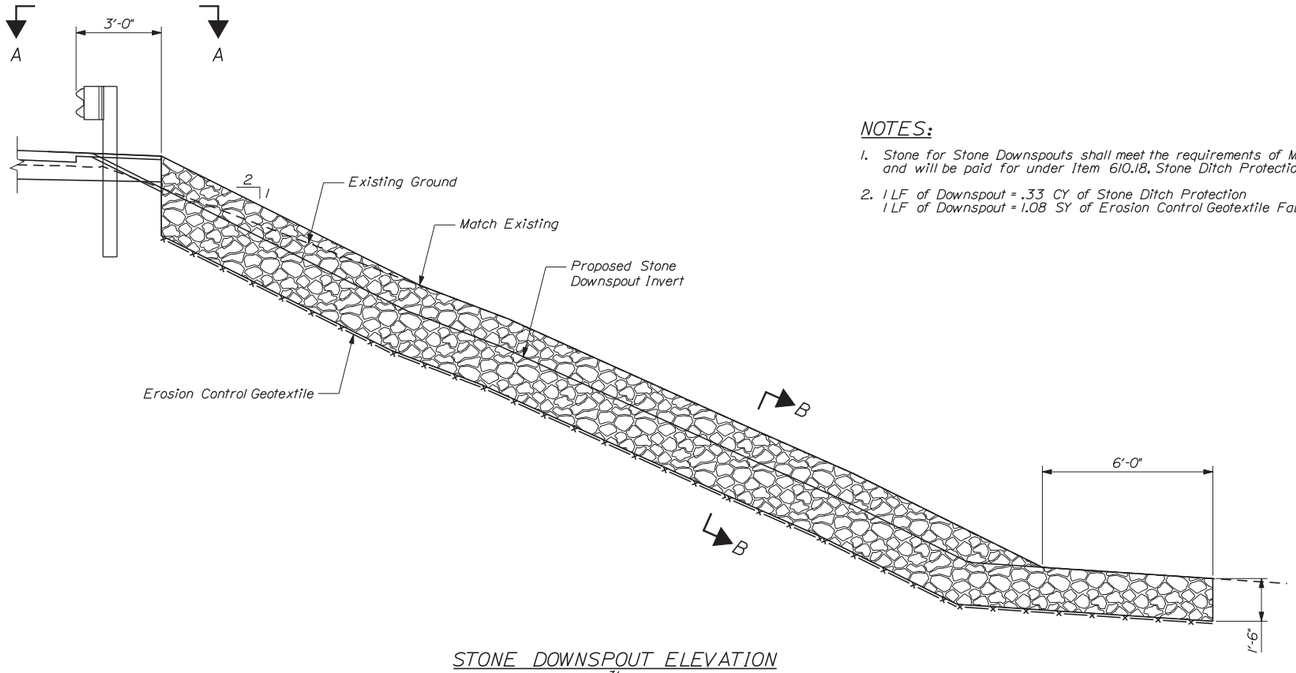

STONE DOWNSPOUT ELEVATION
Scale: 3/8" = 1'-0"

NOTES:

1. Stone for Stone Downspouts shall meet the requirements of MDOT Specification 703.29, and will be paid for under Item 610.18, Stone Ditch Protection.
2. 1 LF of Downspout = .33 CY of Stone Ditch Protection
   1 LF of Downspout = 1.08 SY of Erosion Control Geotextile Fabric

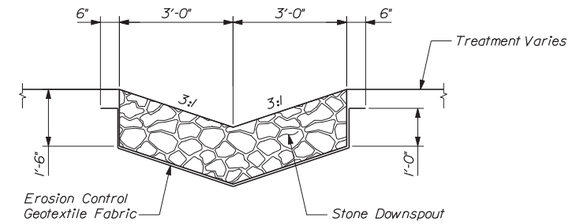

SECTION B-B
Scale: 1/2" = 1'-0"

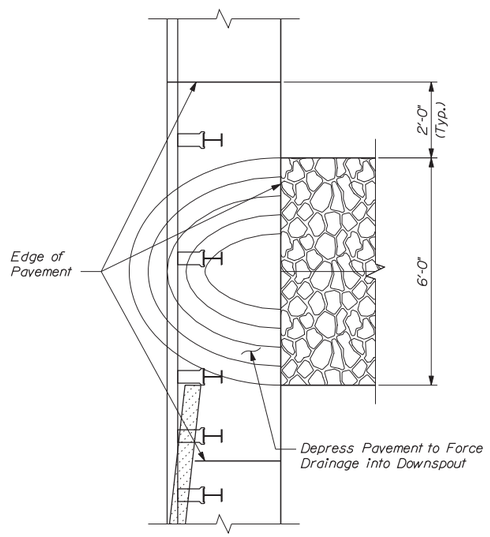

VIEW A-A
Scale: 1/2" = 1'-0"

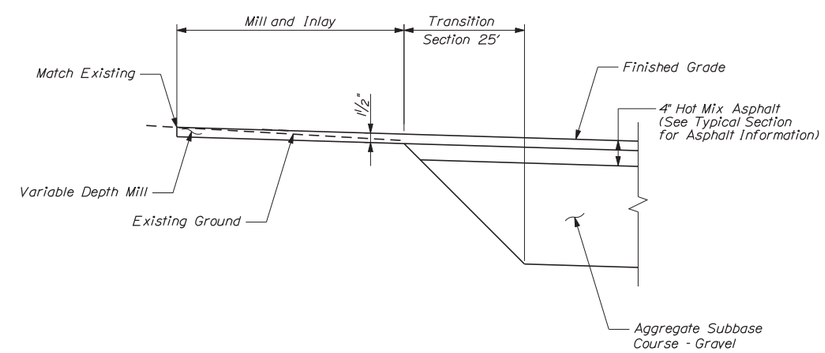

MILL AND INLAY DETAIL
Not to Scale

Date:12/13/2013

Filename: ...\cad\st\planset\005_std_01.dgn

Scale: AS NOTED

No.	Revision	By	Date

Designed by:

Vanasse Hangen Brustlin, Inc.

CONSULTANT PROJECT MANAGER: T. Bryant

	By	Date		By	Date
Designed	KZS	12/13	Checked	SMH	12/13
Drawn	CMD	12/13	In Charge of	TSB	12/13

VANASSE HANGEN BRUSTLIN, INC.
500 Southborough Dr.
Suite 105B
South Portland, ME 04106
TEL (207) 889-3150
FAX (207) 253-5596

MAINE TURNPIKE

THE GOLD STAR MEMORIAL HIGHWAY

MTA PROJECT MANAGER: Ralph C. Norwood IV

SUPERSTRUCTURE REPLACEMENT
LITCHFIELD ROAD UNDERPASS

TYPICAL DETAILS

SHEET NUMBER: 5

CONTRACT:2014.07

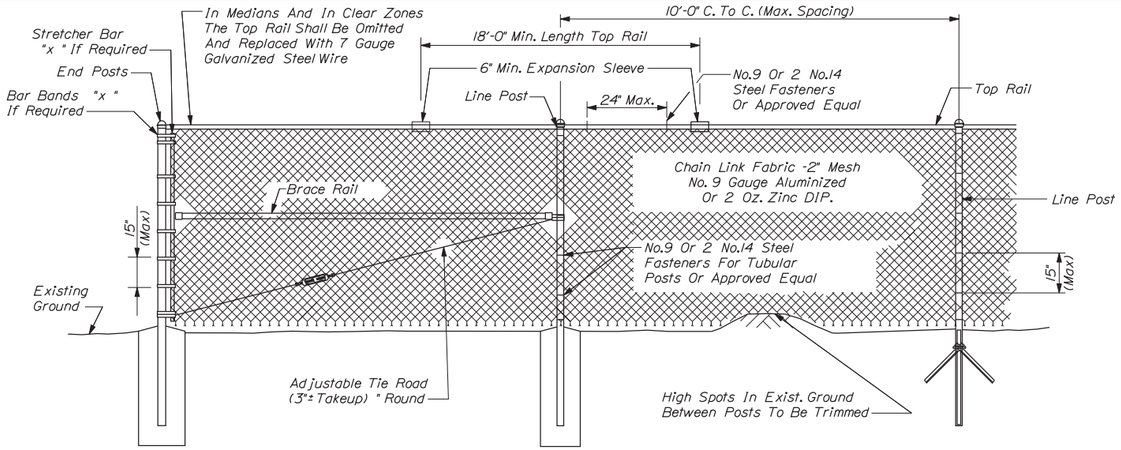

TYPICAL TYPE I END PANEL
N.T.S.

TYPICAL INTERMEDIATE PANEL
N.T.S.

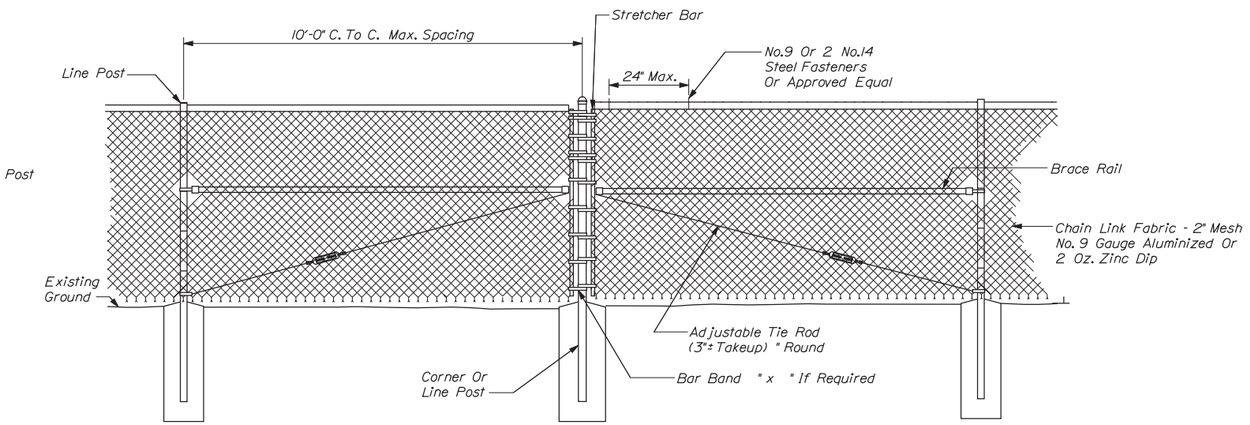

TYPICAL TYPE II BRACE PANEL
N.T.S.

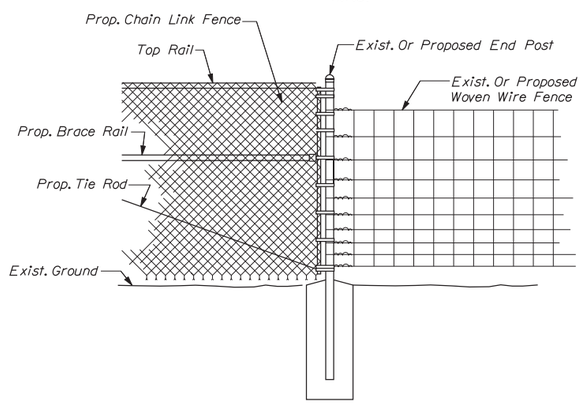

METHOD OF ATTACHING CHAIN LINK FENCE TO WOVEN WIRE FENCE
N.T.S.

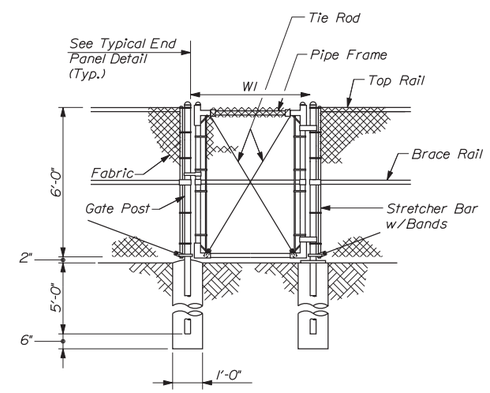

SINGLE GATE

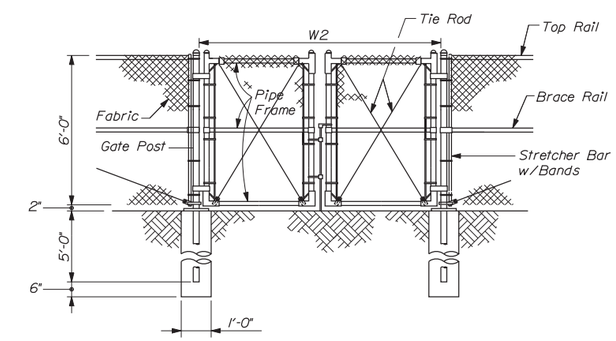

DOUBLE GATE

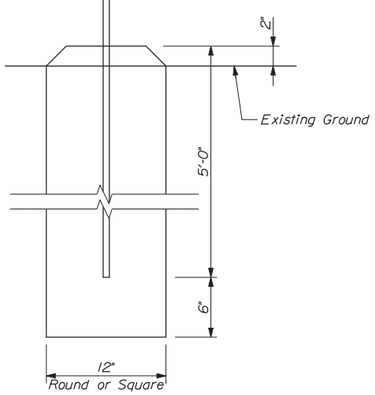

BRACE, GATE AND END POST BASE DETAIL
N.T.S.

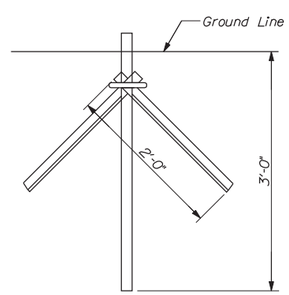

LINE POST DRIVE ANCHOR DETAIL
N.T.S.

Gate Width		Gate Post
W1	W2	O.D.
to 6'	to 12'	3"
6' to 12'	12' to 24'	4"
12' to 18'	24' to 36'	6"

BENDING MOMENTS BASED ON GRADE 1 (SCHEDULE 40 STEEL)

CHAIN LINK FENCE	SHAPE	NOMINAL SIZE (INCHES)	BENDING MOMENT* (LBS.-IN.)
END & CORNER POSTS	ϕ	2 I.D.	14,025
LINE POSTS	ϕ	1-1/2 I.D.	8,150
TOP & BRACE RAILS	ϕ	1-1/4 I.D.	5,875

* MATERIAL FOR GRADE 2 END, CORNER & LINE POSTS AND TOP & BRACE RAILS MUST MEET OR EXCEED BENDING MOMENTS FOR GRADE 1 STEEL AS NOTED ABOVE.

NOTES:

1. BRACE PANELS SHALL BE INSTALLED WHERE THE CHANGE IN GRADE BETWEEN ANY THREE POSTS EXCEEDS 15 PERCENT.
2. NO ADDITIONAL PAYMENT WILL BE MADE FOR LONGER POSTS NECESSITATED BY LARGE GRADE DIFFERENTIAL.
3. TYPE I BRACING WILL BE USED AT FENCE ENDS. TYPE II BRACING WILL BE USED AT CORNER POSTS.
4. WHEN LEDGE IS ENCOUNTERED, STEEL POSTS SHALL BE SET AND GROUTED 12" DEEP UNLESS THE POSTS PENETRATE THE GROUND TO THE DEPTH INDICATED ON THE DRAWINGS.
5. CONCRETE FOR POST FOUNDATION SHALL BE CLASS B.
6. BRACE, GATE AND END POSTS SHALL BE SET IN CONCRETE.
7. CHAIN LINK FENCE SHALL BE INSTALLED WITH BARBS DOWN.
8. ALL COMPONENTS OF CHAIN LINK FENCE SHALL BE IN ACCORDANCE WITH AASHTO M181.

Scale: AS NOTED

No.	Revision	By	Date

Designed by: Vanasse Hangen Brustlin, Inc.

CONSULTANT PROJECT MANAGER: T. Bryant

	By	Date		By	Date
Designed	KZS	12/13	Checked	SMH	12/13
Drawn	CMD	12/13	In Charge of	TSB	12/13

VANASSE HANGEN BRUSTLIN, INC.
500 Southborough Dr.
Suite 105B
South Portland, ME 04106
TEL (207) 889-3150
FAX (207) 253-5596

MAINE TURNPIKE

THE GOLD STAR MEMORIAL HIGHWAY

MTA PROJECT MANAGER: Ralph C. Norwood IV

SUPERSTRUCTURE REPLACEMENT
LITCHFIELD ROAD UNDERPASS

FENCING DETAILS

SHEET NUMBER: 6

CONTRACT: 2014.07

Date: 12/13/2013
Filename: ...\cad\st\planset\006_std_02.dgn

Item 606.1728 W Beam to 3 Bar Bridge Transition	EA
Sta. 128+50.4 RT to Sta. 128+79.6 RT	1
Sta. 128+59.4 LT to Sta. 128+88.6 LT	1
Sta. 131+17.2 RT to Sta. 131+46.4 RT	1
Sta. 131+26.2 LT to Sta. 131+55.3 LT	1

Item 607.17 Chain Link Fence - 6 Foot	LF
Sta. 128+59.8 44.6' LT to Sta. 128+64.7 60.3' LT	16.5
Sta. 128+64.7 60.3' LT to Sta. 129+10.3 44.6' LT	48.2
Sta. 128+69.5 80.3' RT to Sta. 128+89.9 15.5' RT	68.0
Sta. 129+00.9 15.7' LT to Sta. 129+10.3 44.6' LT	30.3
Sta. 130+83.6 72.0' RT to Sta. 131+04.2 15.1' RT	60.5
Sta. 131+12.9 15.0' LT to Sta. 131+37.2 71.5' LT	61.5
Sta. 131+37.2 71.5' LT to Sta. 131+86.4 71.5' LT	49.2

Item 610.18 Stone Ditch Protection
Sta. 128+55.5 16.0' RT
Sta. 128+66.0 16.0' LT
Sta. 131+39.8 16.0' RT
Sta. 131+48.7 16.0' LT

Item 627.712 4" White or Yellow Pavement Marking Line Type	LF
Sta. 126+50 to Sta. 133+50 DYCL	1400

Item 607.23 Chain Link Fence Gate	EA
East Approach	1
West Approach	1

Limits of Milling	SY
Sta. 126+50 to Sta. 126+75	60
Sta. 133+25 to Sta. 133+50	60

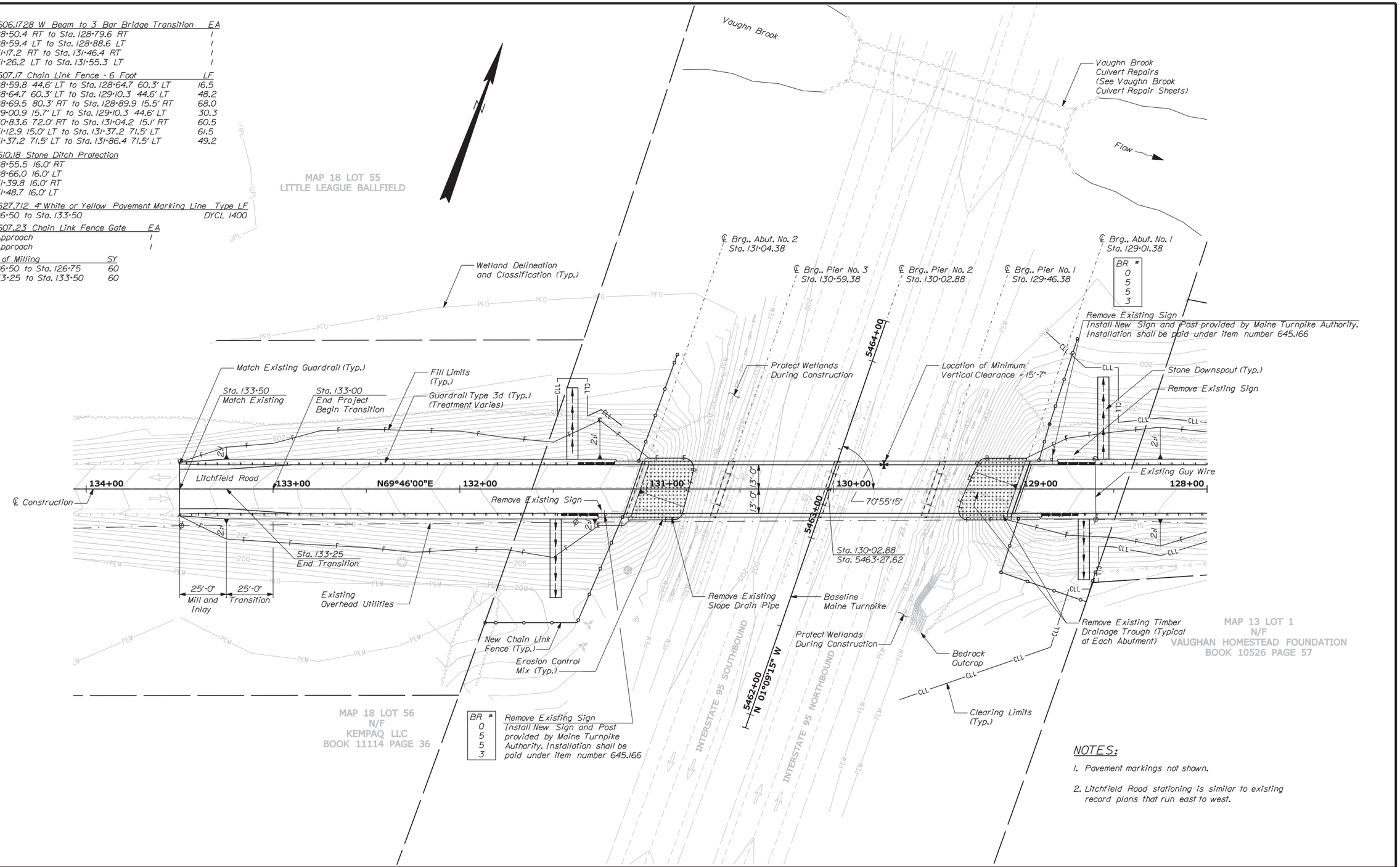

NOTES:

1. Pavement markings not shown.
2. Litchfield Road stationing is similar to existing record plans that run east to west.

Date:12/13/2013

Filename: ...\st\planset\007_roadplan_01.dgn

Scale: 25 0 25 50
Scale of Feet

No.	Revision	By	Date

Designed by:
Vanasse Hangen Brustlin, Inc.

CONSULTANT PROJECT MANAGER: T. Bryant

	By	Date		By	Date
Designed	KZS	12/13	Checked	SMH	12/13
Drawn	CMD	12/13	In Charge of	TSB	12/13

VANASSE HANGEN BRUSTLIN, INC.
500 Southborough Dr.
Suite 105B
South Portland, ME 04106
TEL (207) 889-3150
FAX (207) 253-5596

MAINE TURNPIKE

THE GOLD STAR MEMORIAL HIGHWAY

MTA PROJECT MANAGER: Ralph C. Norwood IV

SUPERSTRUCTURE REPLACEMENT
LITCHFIELD ROAD UNDERPASS

GENERAL PLAN (1 OF 2)

SHEET NUMBER: 7

CONTRACT:2014.07

Item 606.24 Guardrail Type 3d - Single Rail	LF
Sta. 126+06.7 RT to Sta. 128+50.4 RT	243.75
Sta. 131+46.4 RT to Sta. 133+50.0 RT	206.25
Sta. 126+90.5 LT to Sta. 128+59.4 LT	168.75
Sta. 131+55.3 LT to Sta. 133+50.0 LT	200.00

Item 606.265 Terminal End - Single Rail - Galvanized Steel	EA
Sta. 125+69.7 RT to Sta. 126+06.7 RT	1
Sta. 126+53.1 LT to Sta. 126+90.5 LT	1

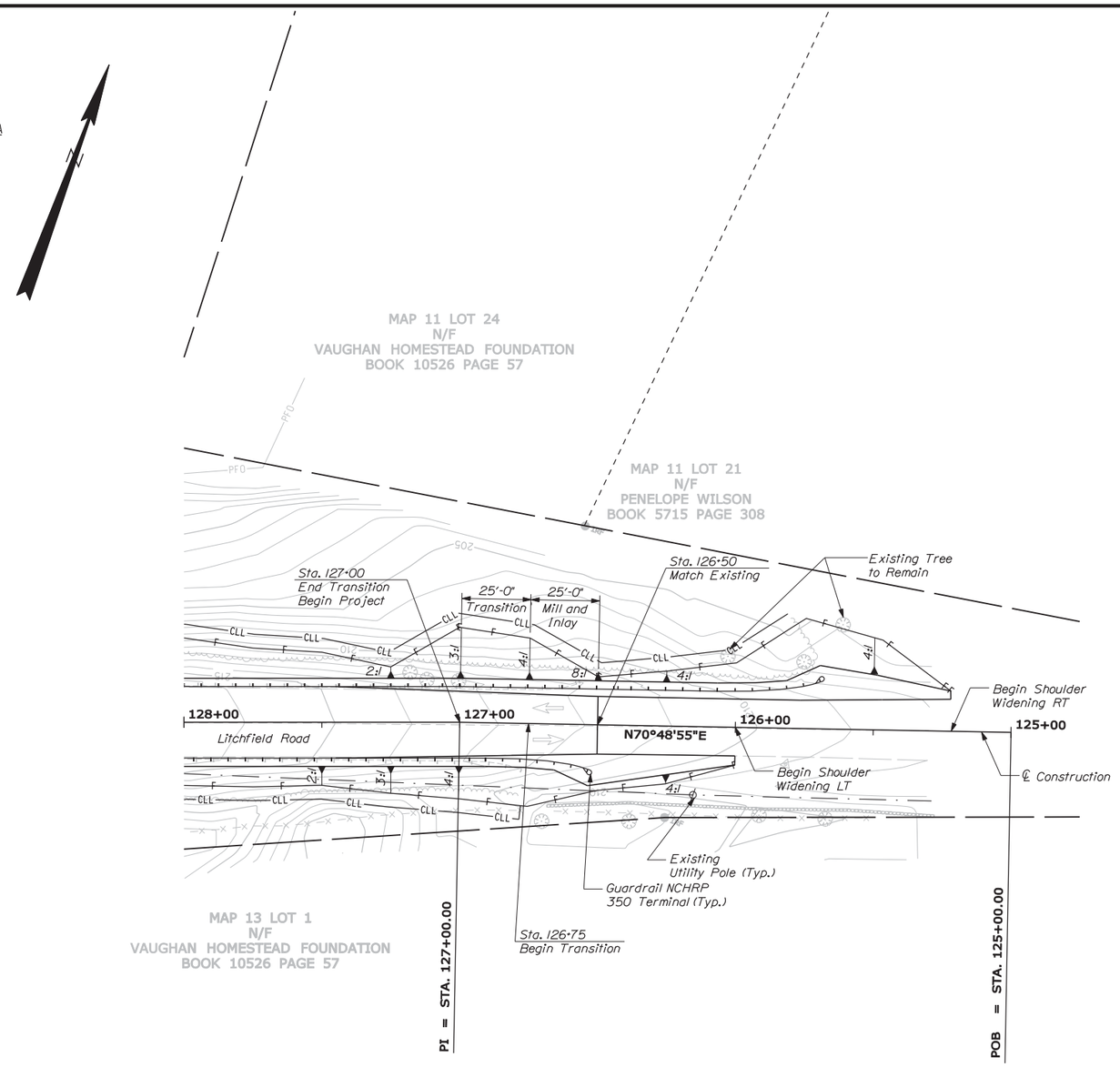

NOTES:

1. Pavement markings not shown.
2. Litchfield Road stationing is similar to existing record plans that run east to west.

Date:12/13/2013

Filename: ...\st\planset\008_roadplan_02.dgn

Scale: 25 0 25 50
Scale of Feet

No.	Revision	By	Date

Designed by:

VHB Vanasse Hangen Brustlin, Inc.

CONSULTANT PROJECT MANAGER: T. Bryant

	By	Date		By	Date
Designed	KZS	12/13	Checked	SMH	12/13
Drawn	CMD	12/13	In Charge of	TSB	12/13

VANASSE HANGEN BRUSTLIN, INC.
500 Southborough Dr.
Suite 105B
South Portland, ME 04106
TEL (207) 889-3150
FAX (207) 253-5596

MAINE TURNPIKE

THE GOLD STAR MEMORIAL HIGHWAY

MTA PROJECT MANAGER: Ralph C. Norwood IV

SUPERSTRUCTURE REPLACEMENT
LITCHFIELD ROAD UNDERPASS

GENERAL PLAN (2 OF 2)

SHEET NUMBER: 8

CONTRACT:2014.07

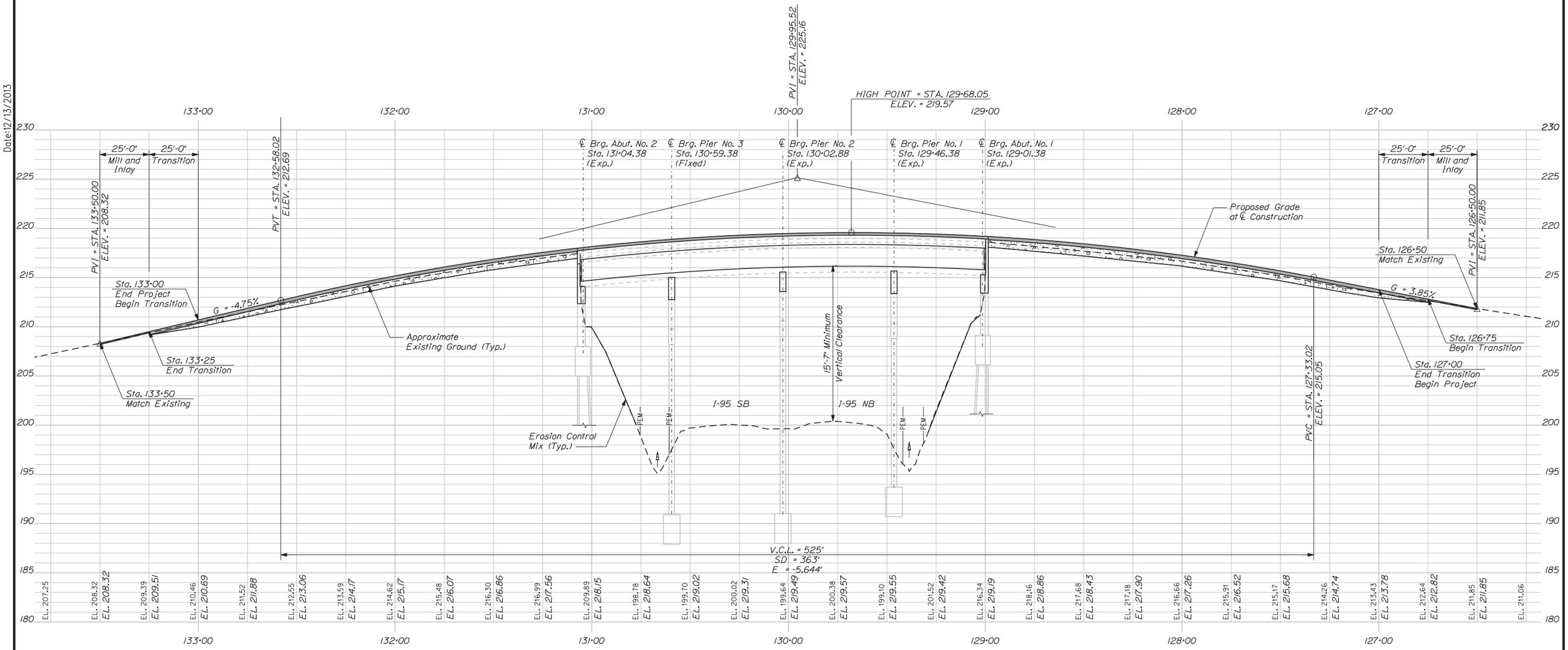

PROFILE

Date:12/13/2013

Filename: ...\st\planset\009_profile_01.dgn

Scale: Horiz. 25 0 25 50
Vert. 5 0 5 10
Scale of Feet

No.	Revision	By	Date

Designed by:

VHB Vanasse Hangen Brustlin, Inc.

CONSULTANT PROJECT MANAGER: T. Bryant

	By	Date		By	Date
Designed	KZS	12/13	Checked	SMH	12/13
Drawn	CMD	12/13	In Charge of	TSB	12/13

VANASSE HANGEN BRUSTLIN, INC.
500 Southborough Dr.
Suite 105B
South Portland, ME 04106
TEL (207) 889-3150
FAX (207) 253-5596

MAINE TURNPIKE

THE GOLD STAR MEMORIAL HIGHWAY

MTA PROJECT MANAGER: Ralph C. Norwood IV

SUPERSTRUCTURE REPLACEMENT
LITCHFIELD ROAD UNDERPASS

PROFILE

SHEET NUMBER: 9

CONTRACT:2014.07

9 OF 70

Agg = Aggregate Subbase Course

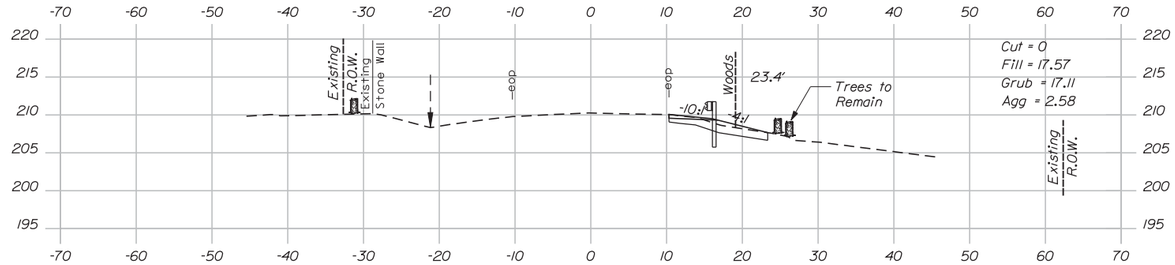

Begin Shoulder Widening, LT
126+00.00

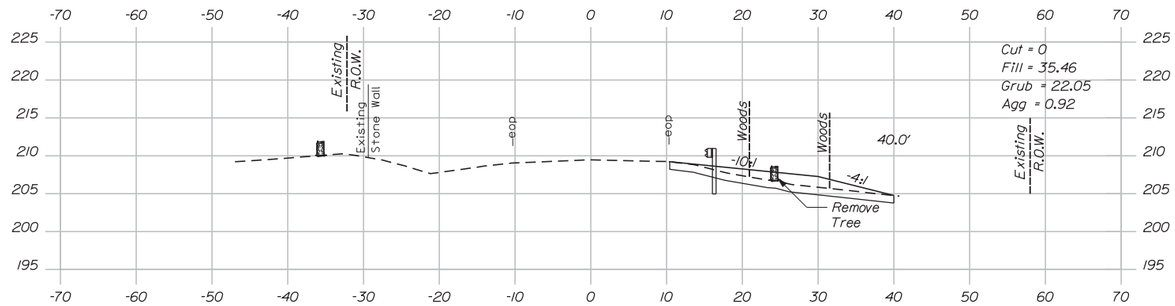

125+75.00

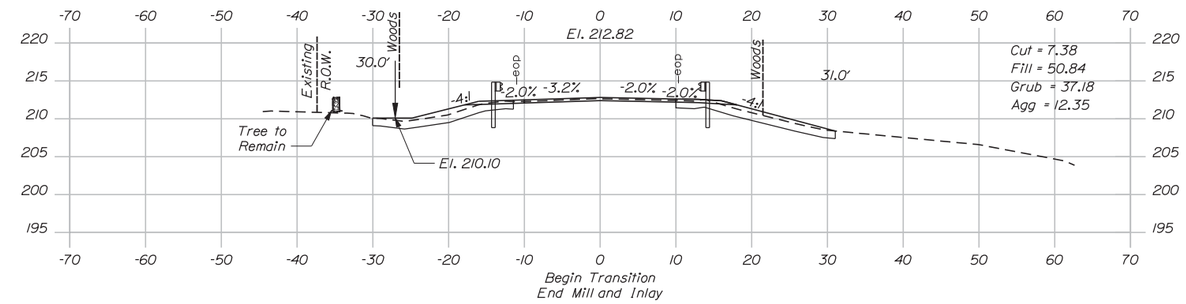

Begin Transition
End Mill and Inlay
126+75.00

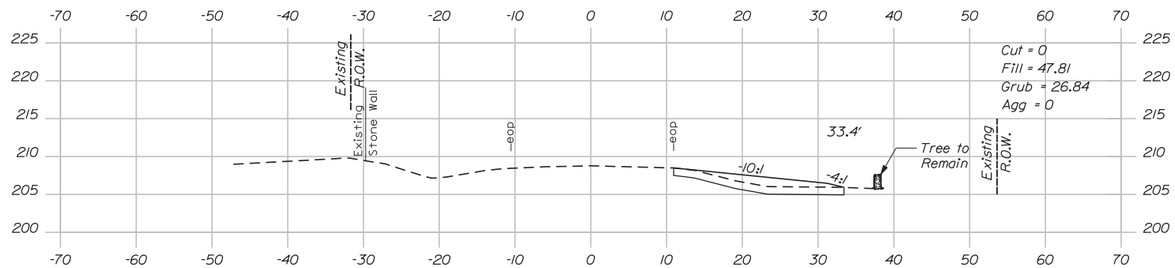

125+50.00

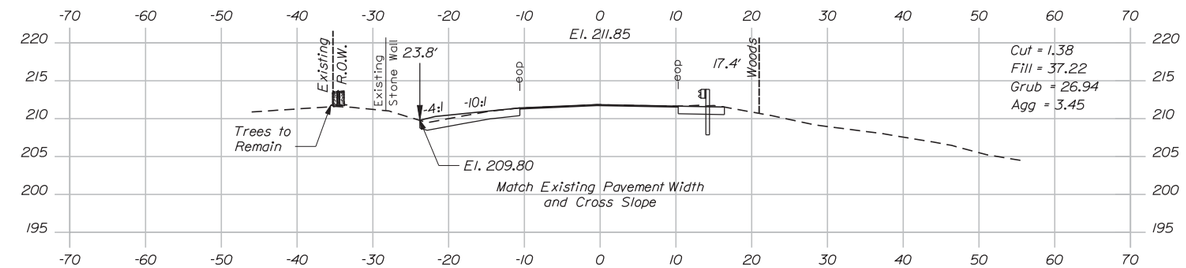

Begin Mill and Inlay
126+50.00

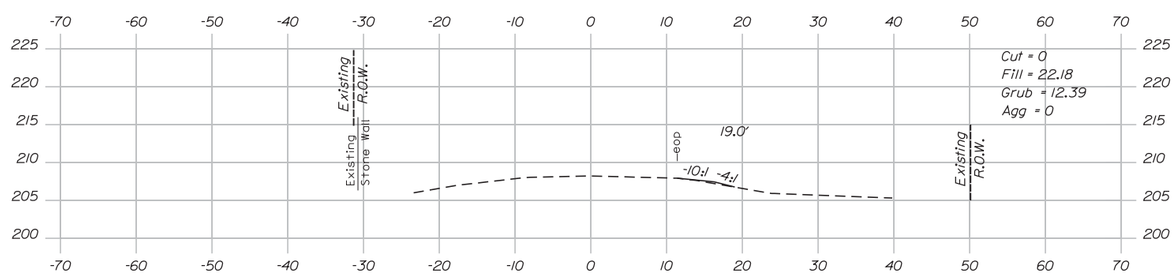

Begin Shoulder Widening, RT
125+30.00

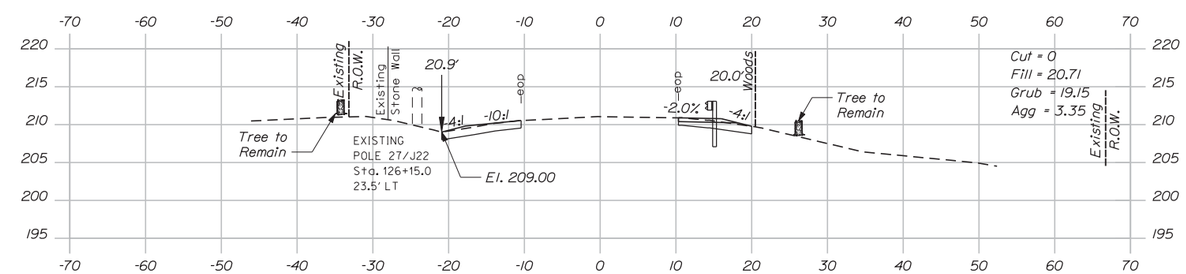

126+25.00

Date:12/13/2013

Filename: ...\cad\st\planset\010_xs_01.dgn

Scale: 10 0 10 20
Scale of Feet

No.	Revision	By	Date

Designed by:

Vanasse Hangen Brustlin, Inc.

CONSULTANT PROJECT MANAGER: T. Bryant

	By	Date		By	Date
Designed	KZS	12/13	Checked	SMH	12/13
Drawn	CMD	12/13	In Charge of	TSB	12/13

VANASSE HANGEN BRUSTLIN, INC.
500 Southborough Dr.
Suite 105B
South Portland, ME 04106
TEL (207) 889-3150
FAX (207) 253-5596

MAINE TURNPIKE

THE GOLD STAR MEMORIAL HIGHWAY

MTA PROJECT MANAGER: Ralph C. Norwood IV

SUPERSTRUCTURE REPLACEMENT
LITCHFIELD ROAD UNDERPASS

CROSS SECTIONS
STA. 125+30 TO STA. 126+75

SHEET NUMBER: 10

CONTRACT:2014.07

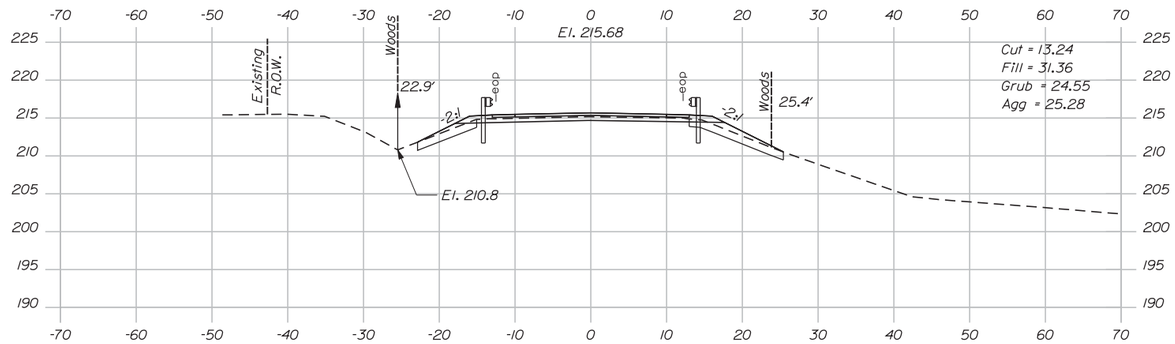

127+50.00

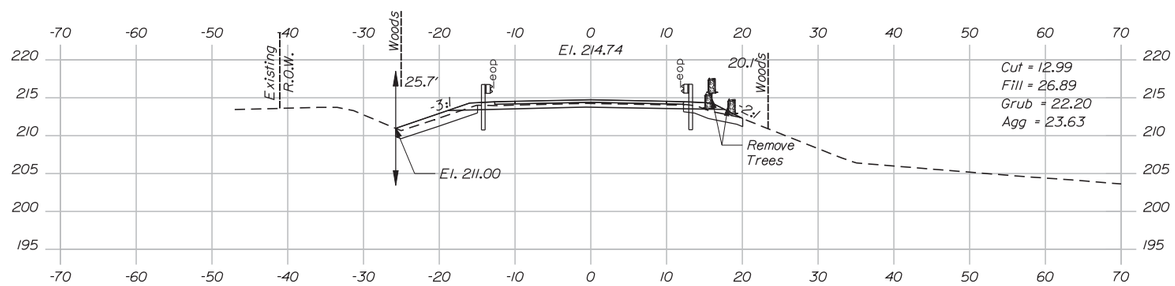

127+25.00

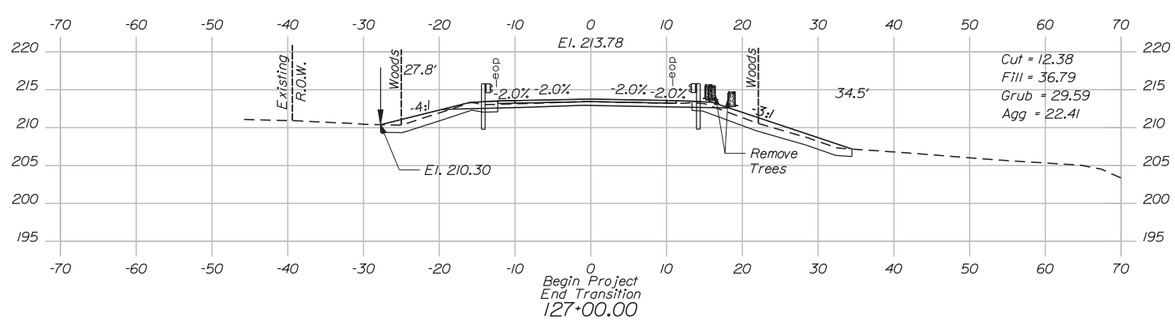

127+00.00

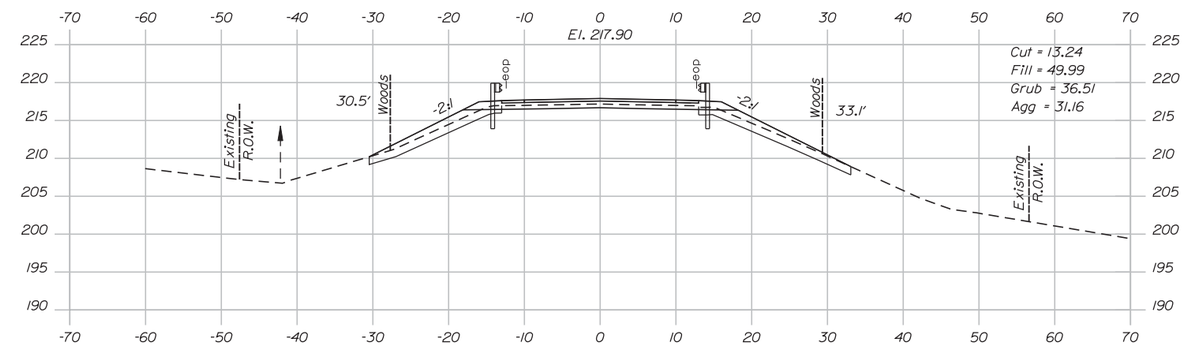

128+25.00

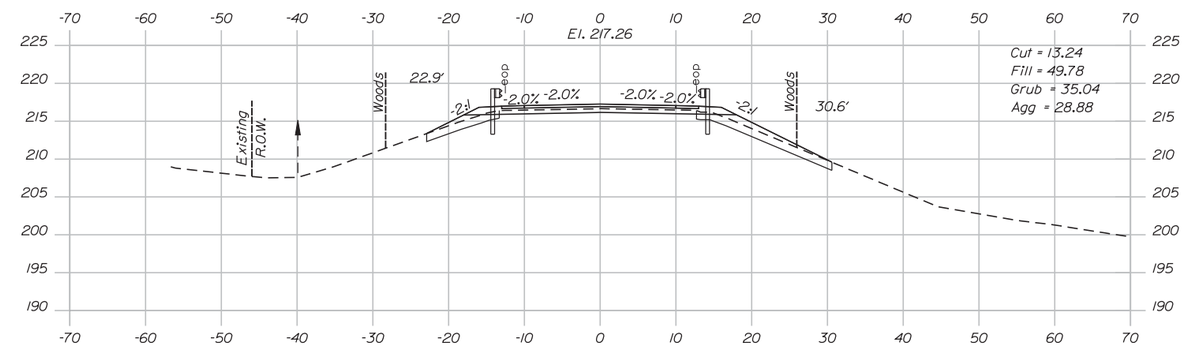

128+00.00

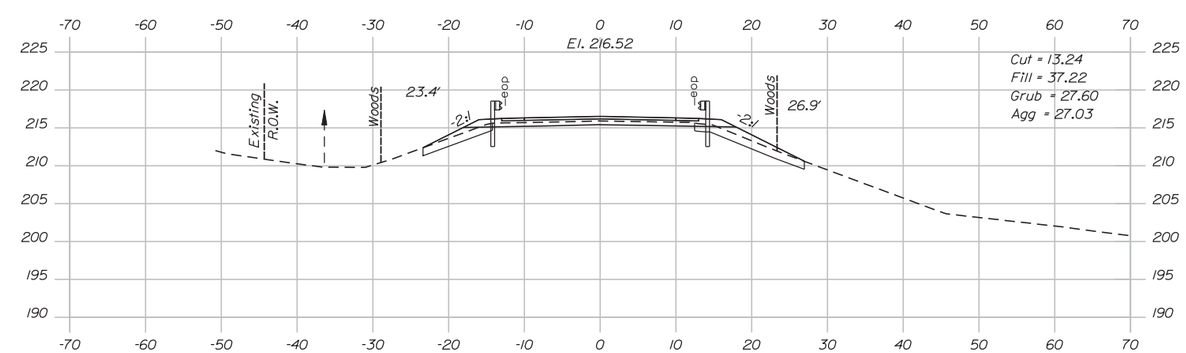

127+75.00

Date:12/13/2013

Filename: ...\cad\st\planset\011_xs_02.dgn

Scale: 10 0 10 20
Scale of Feet

No.	Revision	By	Date

Designed by:

VHB Vanasse Hangen Brustlin, Inc.

CONSULTANT PROJECT MANAGER: T. Bryant

	By	Date		By	Date
Designed	KZS	12/13	Checked	SMH	12/13
Drawn	CMD	12/13	In Charge of	TSB	12/13

VANASSE HANGEN BRUSTLIN, INC.
500 Southborough Dr.
Suite 105B
South Portland, ME 04106
TEL (207) 889-3150
FAX (207) 253-5596

MAINE TURNPIKE

THE GOLD STAR MEMORIAL HIGHWAY

MTA PROJECT MANAGER: Ralph C. Norwood IV

SUPERSTRUCTURE REPLACEMENT
LITCHFIELD ROAD UNDERPASS

CROSS SECTIONS
STA. 127+00 TO STA. 128+25

SHEET NUMBER: 11

CONTRACT:2014.07

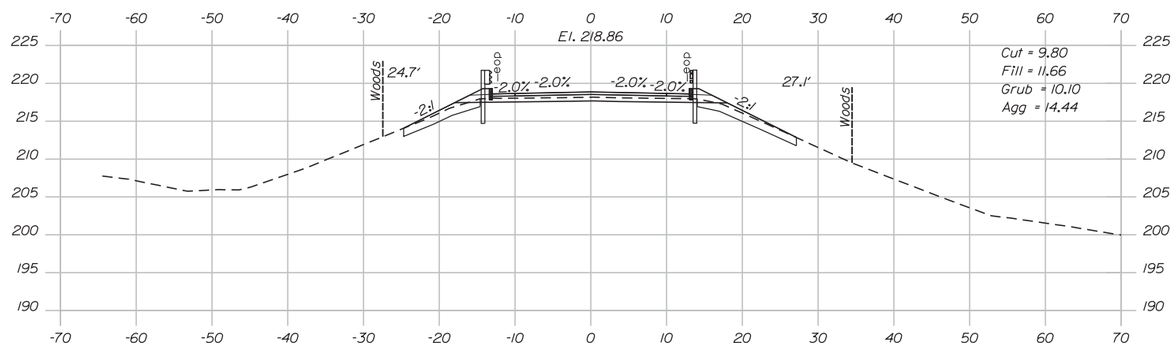

128+75.00

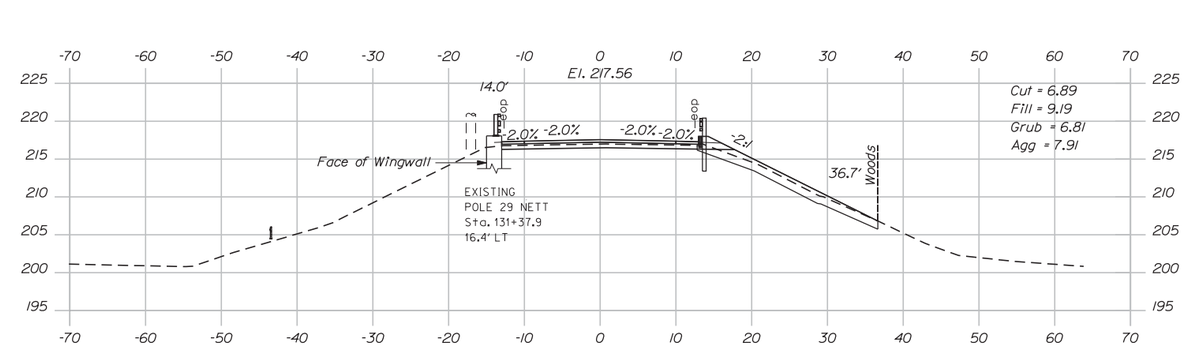

131+25.00

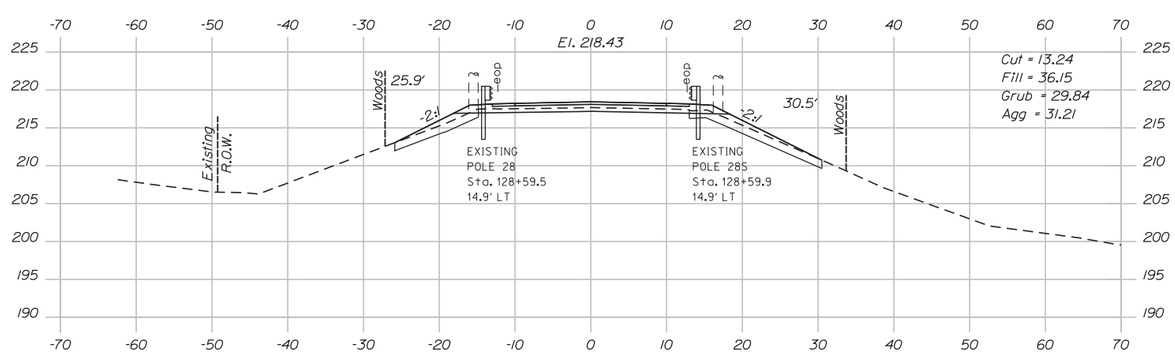

128+50.00

Bridge Sta. 128+98.47 to Sta. 131+07.29

Date:12/13/2013

Filename: ...\cad\st\planset\012_xs_03.dgn

Scale: 10 0 10 20
Scale of Feet

No.	Revision	By	Date

Designed by:

VHB Vanasse Hangen Brustlin, Inc.

CONSULTANT PROJECT MANAGER: T. Bryant

	By	Date		By	Date
Designed	KZS	12/13	Checked	SMH	12/13
Drawn	CMD	12/13	In Charge of	TSB	12/13

VANASSE HANGEN BRUSTLIN, INC.
500 Southborough Dr.
Suite 105B
South Portland, ME 04106
TEL (207) 889-3150
FAX (207) 253-5596

MAINE TURNPIKE

THE GOLD STAR MEMORIAL HIGHWAY

MTA PROJECT MANAGER: Ralph C. Norwood IV

SUPERSTRUCTURE REPLACEMENT
LITCHFIELD ROAD UNDERPASS

CROSS SECTIONS
STA. 128+50 TO STA. 131+25

SHEET NUMBER: 12

CONTRACT:2014.07

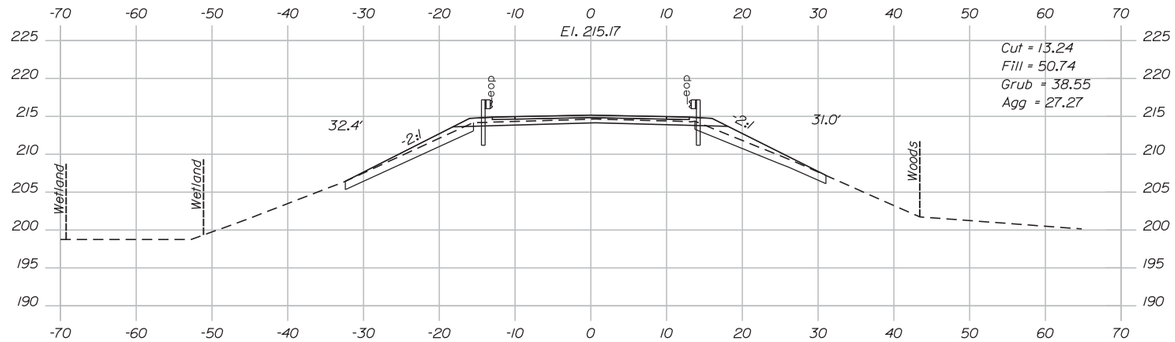

132+00.00

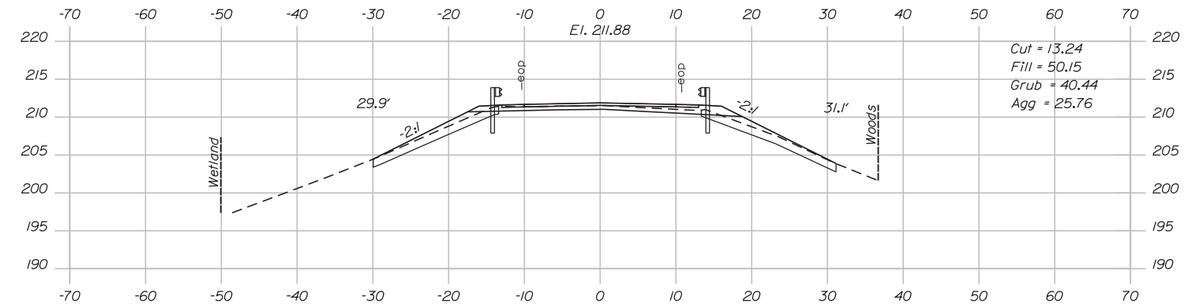

132+75.00

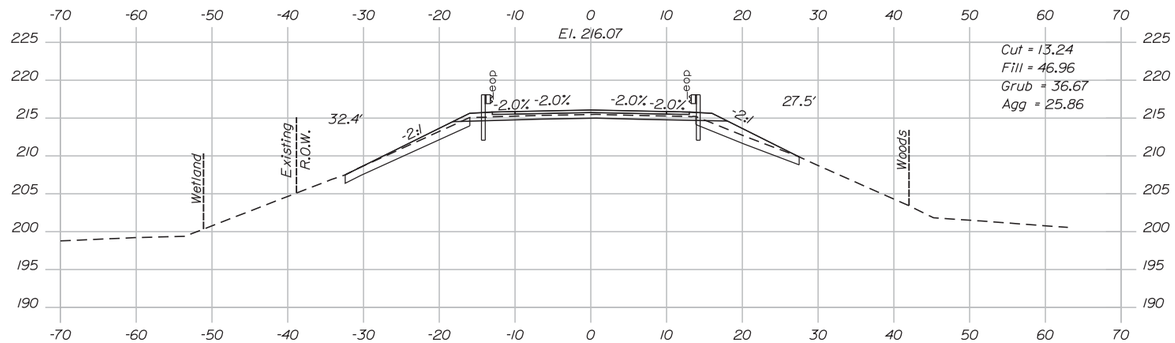

131+75.00

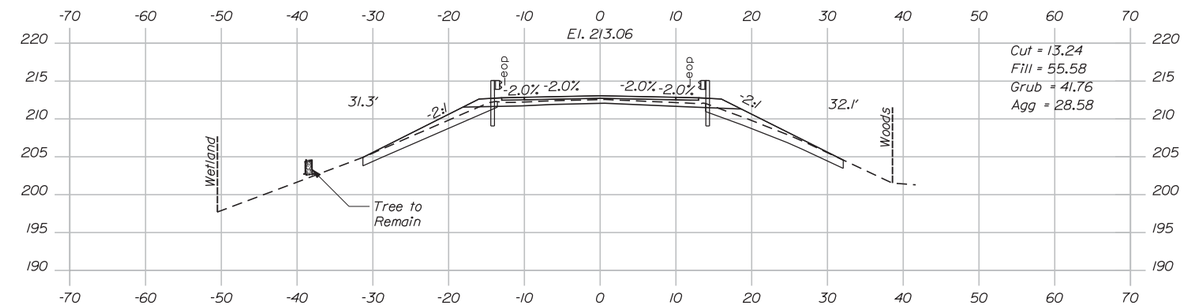

132+50.00

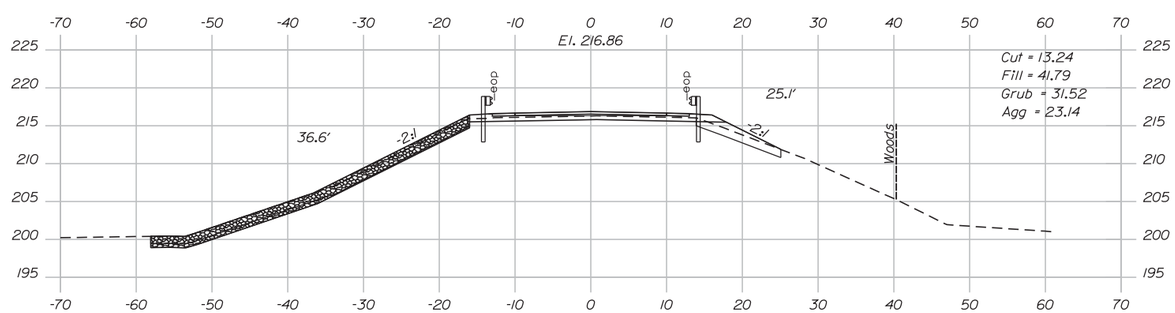

131+50.00

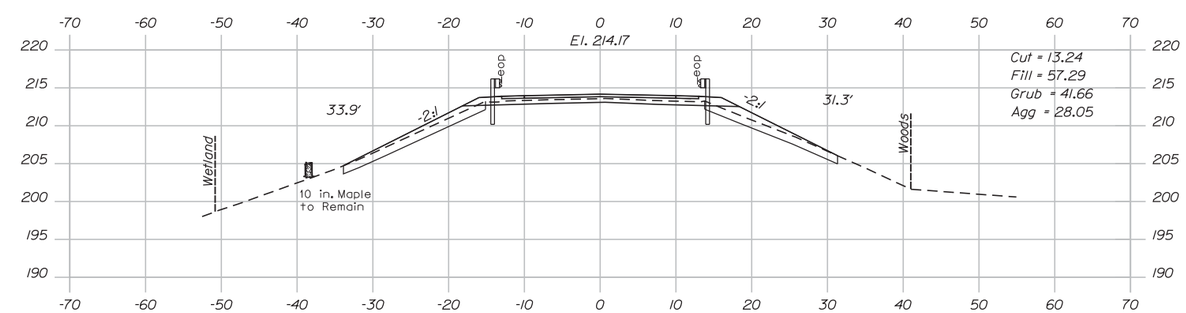

132+25.00

Date:12/13/2013

Filename: ...\cad\st\planset\013_xs_04.dgn

Scale: 10 0 10 20
Scale of Feet

No.	Revision	By	Date

Designed by:

VHB Vanasse Hangen Brustlin, Inc.

CONSULTANT PROJECT MANAGER: T. Bryant

	By	Date		By	Date
Designed	KZS	12/13	Checked	SMH	12/13
Drawn	CMD	12/13	In Charge of	TSB	12/13

VANASSE HANGEN BRUSTLIN, INC.
500 Southborough Dr.
Suite 105B
South Portland, ME 04106
TEL (207) 889-3150
FAX (207) 253-5596

MAINE TURNPIKE

THE GOLD STAR MEMORIAL HIGHWAY

MTA PROJECT MANAGER: Ralph C. Norwood IV

SUPERSTRUCTURE REPLACEMENT
LITCHFIELD ROAD UNDERPASS

CROSS SECTIONS
STA. 131+50 TO STA. 132+75

SHEET NUMBER: 13

CONTRACT:2014.07

Date:12/13/2013

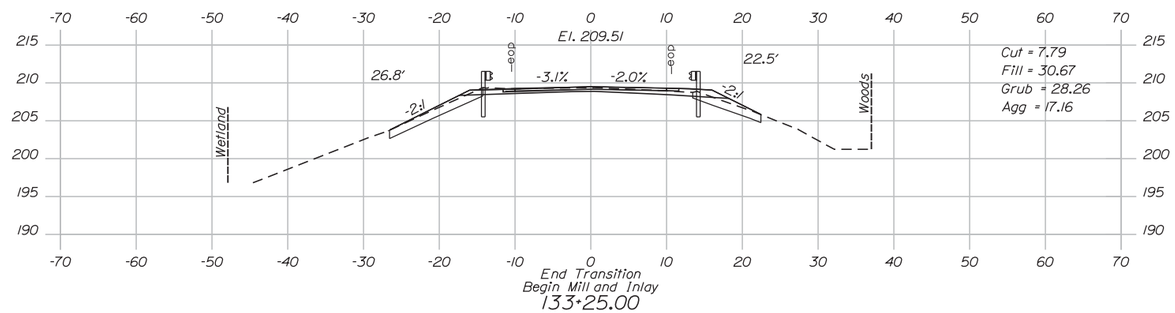

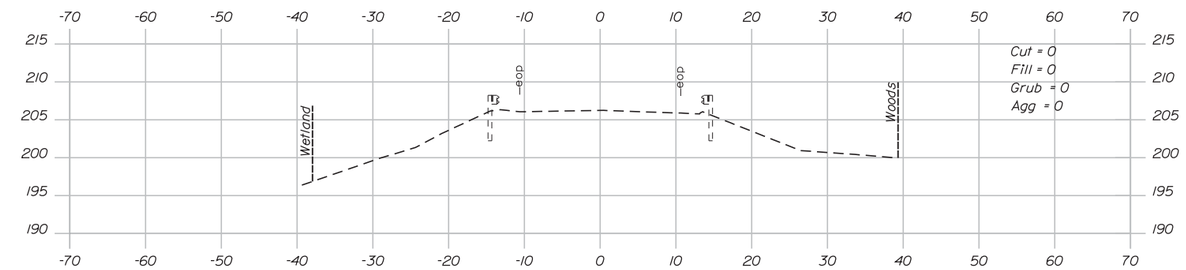

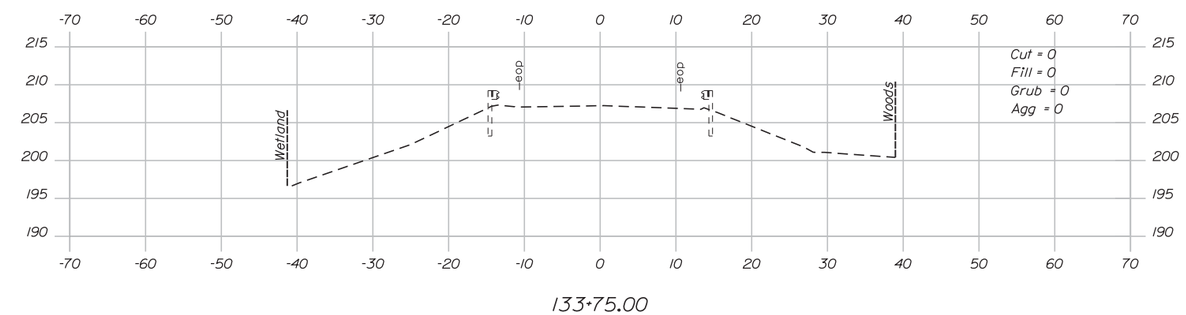

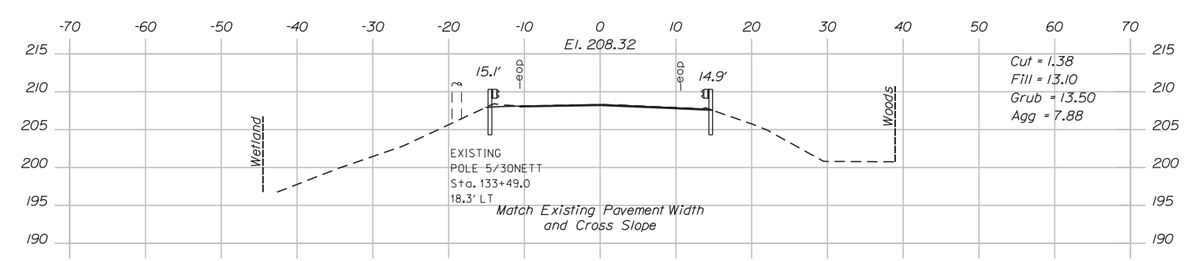

Scale: 10 0 10 20
Scale of Feet

No.	Revision	By	Date

Designed by:

VHB Vanasse Hangen Brustlin, Inc.

CONSULTANT PROJECT MANAGER: T. Bryant

	By	Date		By	Date
Designed	KZS	12/13	Checked	SMH	12/13
Drawn	CMD	12/13	In Charge of	TSB	12/13

VANASSE HANGEN BRUSTLIN, INC.
500 Southborough Dr.
Suite 105B
South Portland, ME 04106
TEL (207) 889-3150
FAX (207) 253-5596

MAINE TURNPIKE

THE GOLD STAR MEMORIAL HIGHWAY

MTA PROJECT MANAGER: Ralph C. Norwood IV

SUPERSTRUCTURE REPLACEMENT
LITCHFIELD ROAD UNDERPASS

CROSS SECTIONS
STA. 133+00 TO STA. 134+00

SHEET NUMBER: 14

CONTRACT:2014.07

Filename: ...\cad\st\planset\014_xs_05.dgn

Date:12/13/2013

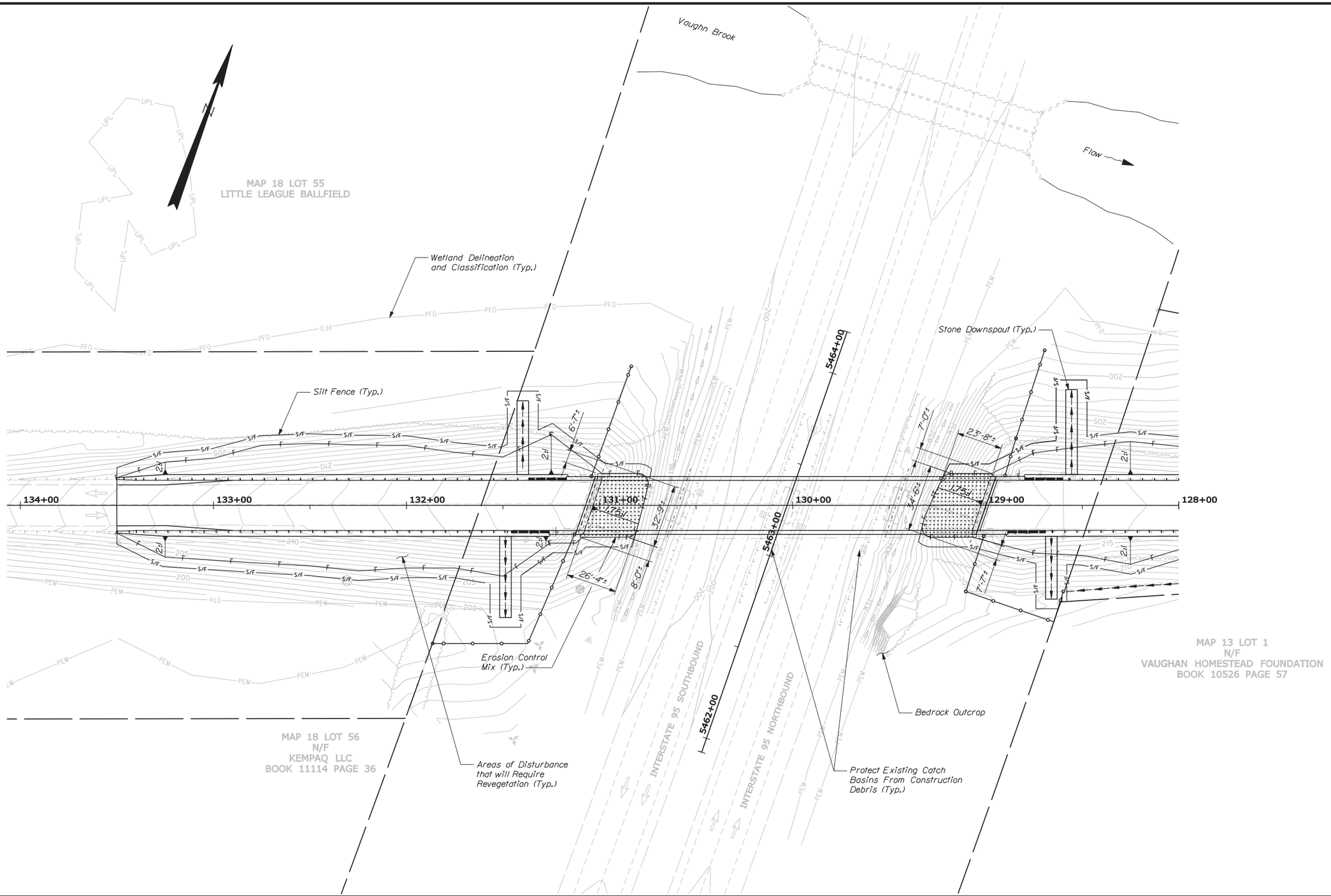

Scale: 25 0 25 50
Scale of Feet

No.	Revision	By	Date

Designed by:

VHB Vanasse Hangen Brustlin, Inc.

CONSULTANT PROJECT MANAGER: T. Bryant

	By	Date		By	Date
Designed	KZS	12/13	Checked	SMH	12/13
Drawn	CMD	12/13	In Charge of	TSB	12/13

VANASSE HANGEN BRUSTLIN, INC.
500 Southborough Dr.
Suite 105B
South Portland, ME 04106
TEL (207) 889-3150
FAX (207) 253-5596

MAINE TURNPIKE

THE GOLD STAR MEMORIAL HIGHWAY

MTA PROJECT MANAGER: Ralph C. Norwood IV

SUPERSTRUCTURE REPLACEMENT
LITCHFIELD ROAD UNDERPASS

EROSION & SEDIMENT CONTROL PLAN
(1 OF 2)

SHEET NUMBER: 15

CONTRACT:2014.07

Filename: ...\planset\015_erosionplan_01.dgn

Date:12/13/2013

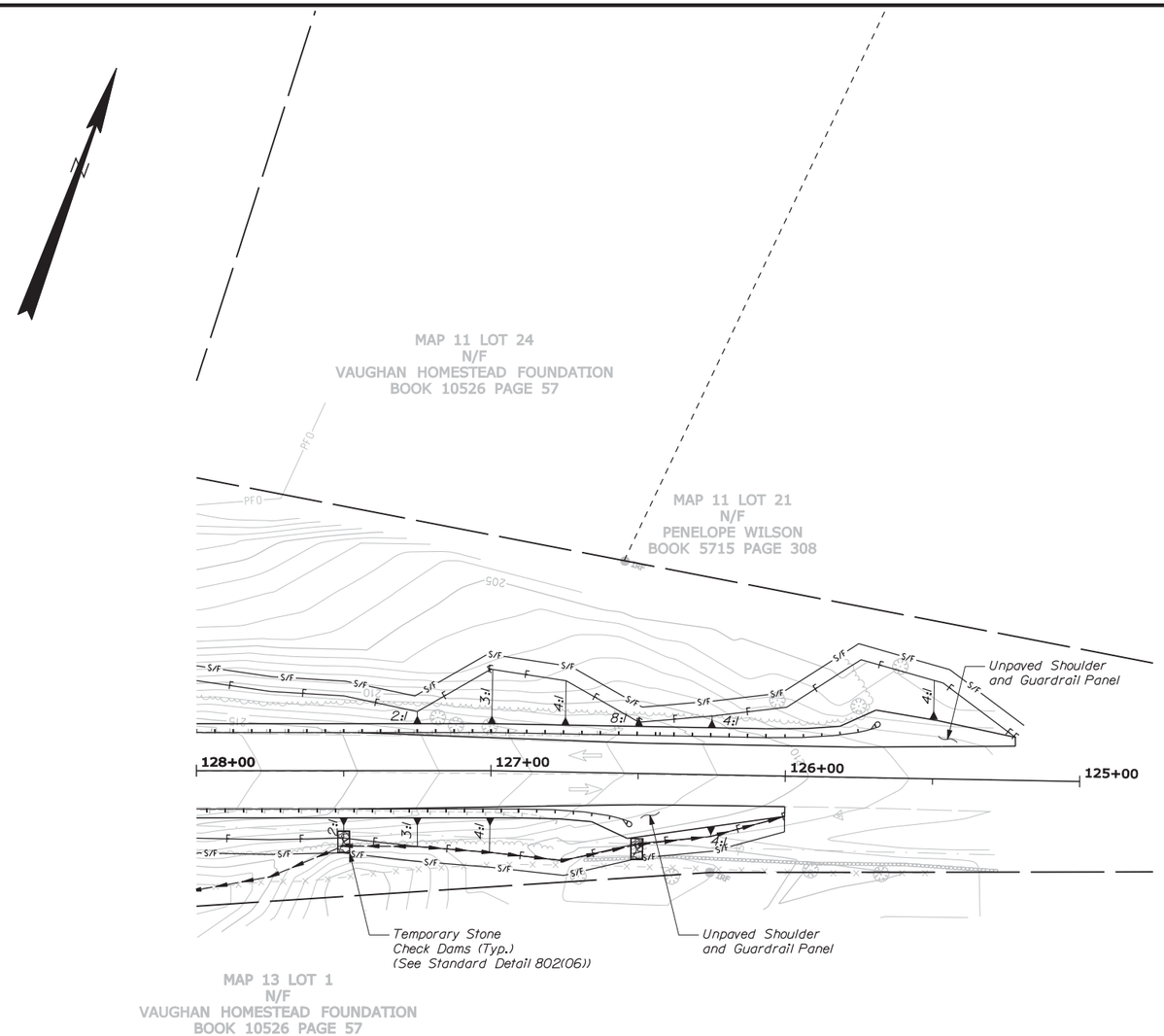

Scale: 25 0 25 50
Scale of Feet

No.	Revision	By	Date

Designed by:

Vanasse Hangen Brustlin, Inc.

CONSULTANT PROJECT MANAGER: T. Bryant

	By	Date		By	Date
Designed	KZS	12/13	Checked	SMH	12/13
Drawn	CMD	12/13	In Charge of	TSB	12/13

VANASSE HANGEN BRUSTLIN, INC.
500 Southborough Dr.
Suite 105B
South Portland, ME 04106
TEL (207) 889-3150
FAX (207) 253-5596

MAINE TURNPIKE

THE GOLD STAR MEMORIAL HIGHWAY

MTA PROJECT MANAGER: Ralph C. Norwood IV

SUPERSTRUCTURE REPLACEMENT
LITCHFIELD ROAD UNDERPASS

EROSION & SEDIMENT CONTROL PLAN
(2 OF 2)

SHEET NUMBER: 16

CONTRACT:2014.07

16 OF 70

Filename: ...\planset\016_erosionplan_02.dgn

Date:12/13/2013

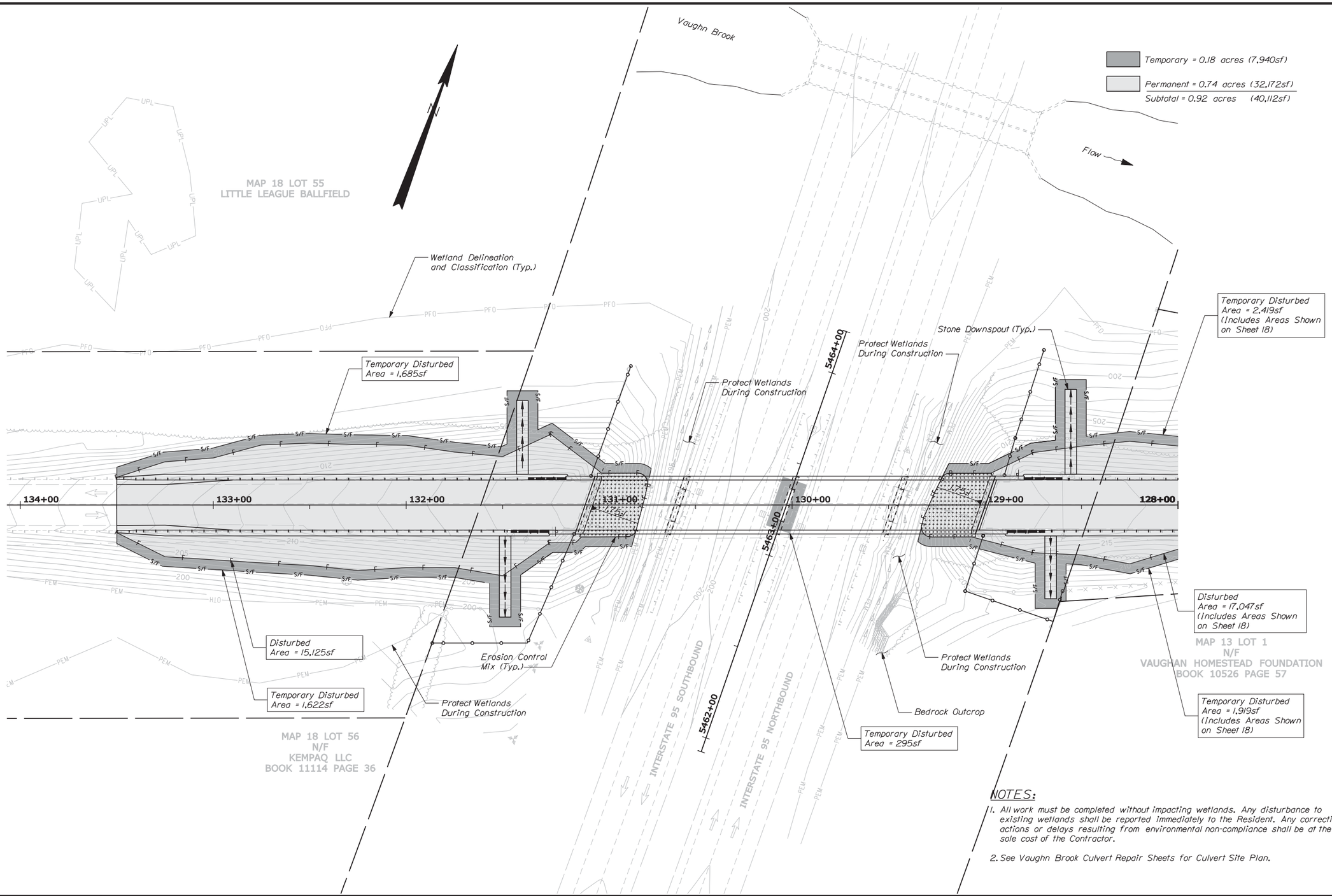

NOTES:

1. All work must be completed without impacting wetlands. Any disturbance to existing wetlands shall be reported immediately to the Resident. Any corrective actions or delays resulting from environmental non-compliance shall be at the sole cost of the Contractor.
2. See Vaughn Brook Culvert Repair Sheets for Culvert Site Plan.

Scale: 25 0 25 50
Scale of Feet

No.	Revision	By	Date

Designed by:

Vanasse Hangen Brustlin, Inc.

CONSULTANT PROJECT MANAGER: T. Bryant

	By	Date		By	Date
Designed	KZS	12/13	Checked	SMH	12/13
Drawn	CMD	12/13	In Charge of	TSB	12/13

VANASSE HANGEN BRUSTLIN, INC.
500 Southborough Dr.
Suite 105B
South Portland, ME 04106
TEL (207) 889-3150
FAX (207) 253-5596

MAINE TURNPIKE

THE GOLD STAR MEMORIAL HIGHWAY

MTA PROJECT MANAGER: Ralph C. Norwood IV

SUPERSTRUCTURE REPLACEMENT
LITCHFIELD ROAD UNDERPASS
DISTURBANCE IMPACT PLAN
(1 OF 2)

SHEET NUMBER: 17

CONTRACT:2014.07

17 OF 70

Filename: ...\017_disturbanceimpact_01.dgn

Date:12/13/2013

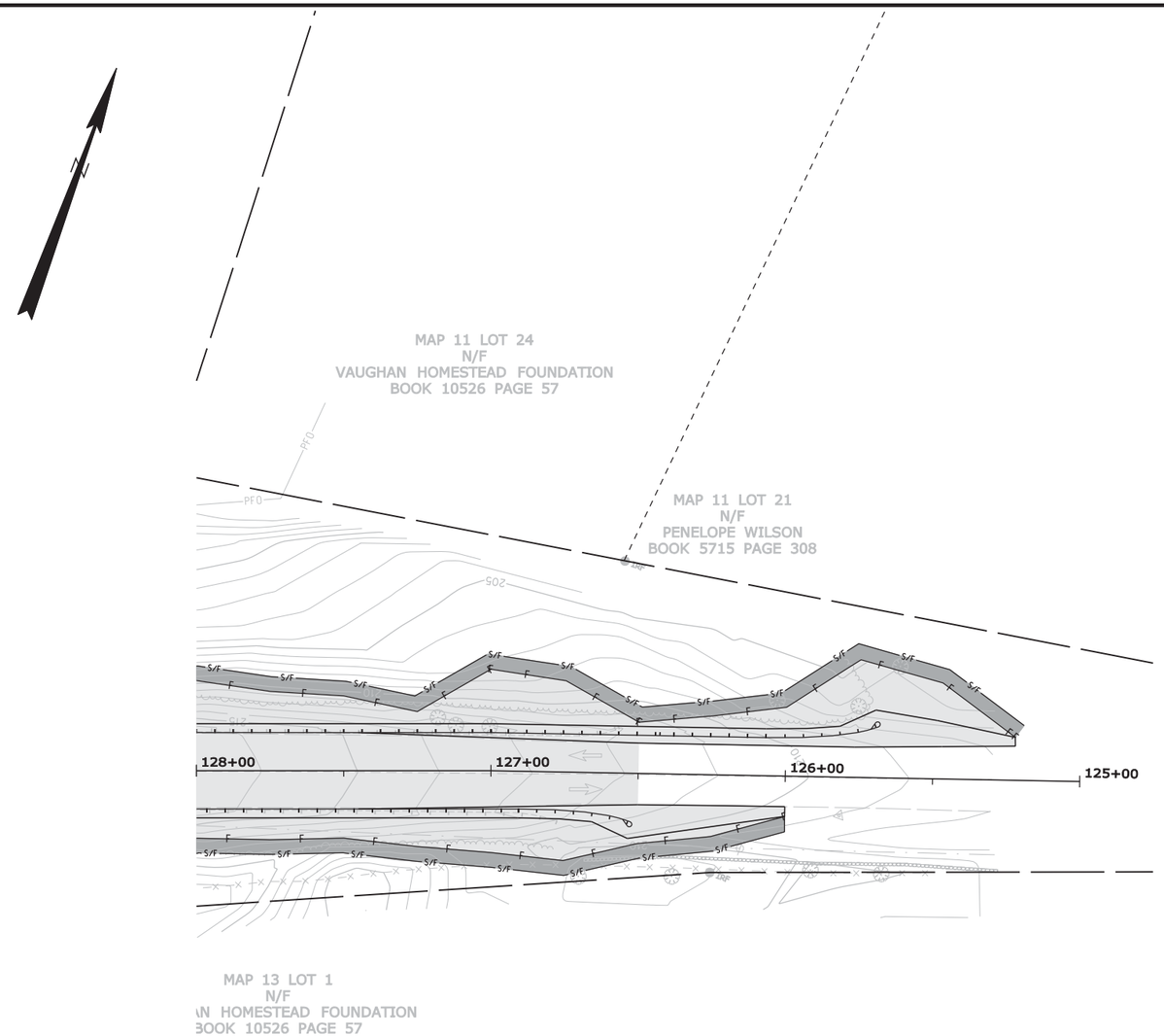

Scale: 25 0 25 50
Scale of Feet

No.	Revision	By	Date

Designed by:

Vanasse Hangen Brustlin, Inc.

CONSULTANT PROJECT MANAGER: T. Bryant

	By	Date		By	Date
Designed	KZS	12/13	Checked	SMH	12/13
Drawn	CMD	12/13	In Charge of	TSB	12/13

VANASSE HANGEN BRUSTLIN, INC.
500 Southborough Dr.
Suite 105B
South Portland, ME 04106
TEL (207) 889-3150
FAX (207) 253-5596

MAINE TURNPIKE

THE GOLD STAR MEMORIAL HIGHWAY

MTA PROJECT MANAGER: Ralph C. Norwood IV

SUPERSTRUCTURE REPLACEMENT
LITCHFIELD ROAD UNDERPASS
DISTURBANCE IMPACT PLAN
(2 OF 2)

SHEET NUMBER: 18

CONTRACT:2014.07

Filename: ...\018_disturbanceimpact_02.dgn

DETOUR SIGN SUMMARY

Sign		Text Dimensions (Inches) Letter Height	Text Dimensions (Inches) Vertical Spacing	Size	Quantity and Color
M4-8a	END DETOUR	SHSB		24"x18"	2 - Black on Orange
M4-9 (MOD. L)	DETOUR ←			30"x24"	6 - Black on Orange
M4-9 (MOD. R)	DETOUR →			30"x24"	5 - Black on Orange
M4-9 (MOD. S)	DETOUR ↑	5"		30"x24"	1 - Black on Orange
M4-10R	DETOUR →	SHSB		48"x18"	2 - Black on Orange
W20-1 (1000)	ROAD CLOSED 1000 FT			36"x36"	2 - Black on Orange
W20-1 (500)	ROAD CLOSED 500 FT			36"x36"	2 - Black on Orange
W20-2	DETOUR 500 FT			36"x36"	1 - Black on Orange
D3-1	Litchfield Rd	6"/4.5"		42"x9"	12 - Black on Orange
R11-2	ROAD CLOSED	SHSB		48"x30"	2 - Black on White
R11-3b (1)	BRIDGE CLOSED 1/4 MILE AHEAD LOCAL TRAFFIC ONLY	6" 5" 4"	3.38" 3.38"	60"x30"	1 - Black on White
R11-3b (2)	BRIDGE CLOSED 1/2 MILE AHEAD LOCAL TRAFFIC ONLY	6" 5" 4"	3.38" 3.38"	60"x30"	1 - Black on White
R11-3b (3)	BRIDGE CLOSED ON LITCHFIELD RD FOLLOW DETOUR	6" 5" 4"	3.38" 3.38"	60"x30"	3 - Black on White

SHSB - Text Dimensions Shall Conform to "Standard Highway Signs Book" - 2012 Edition.

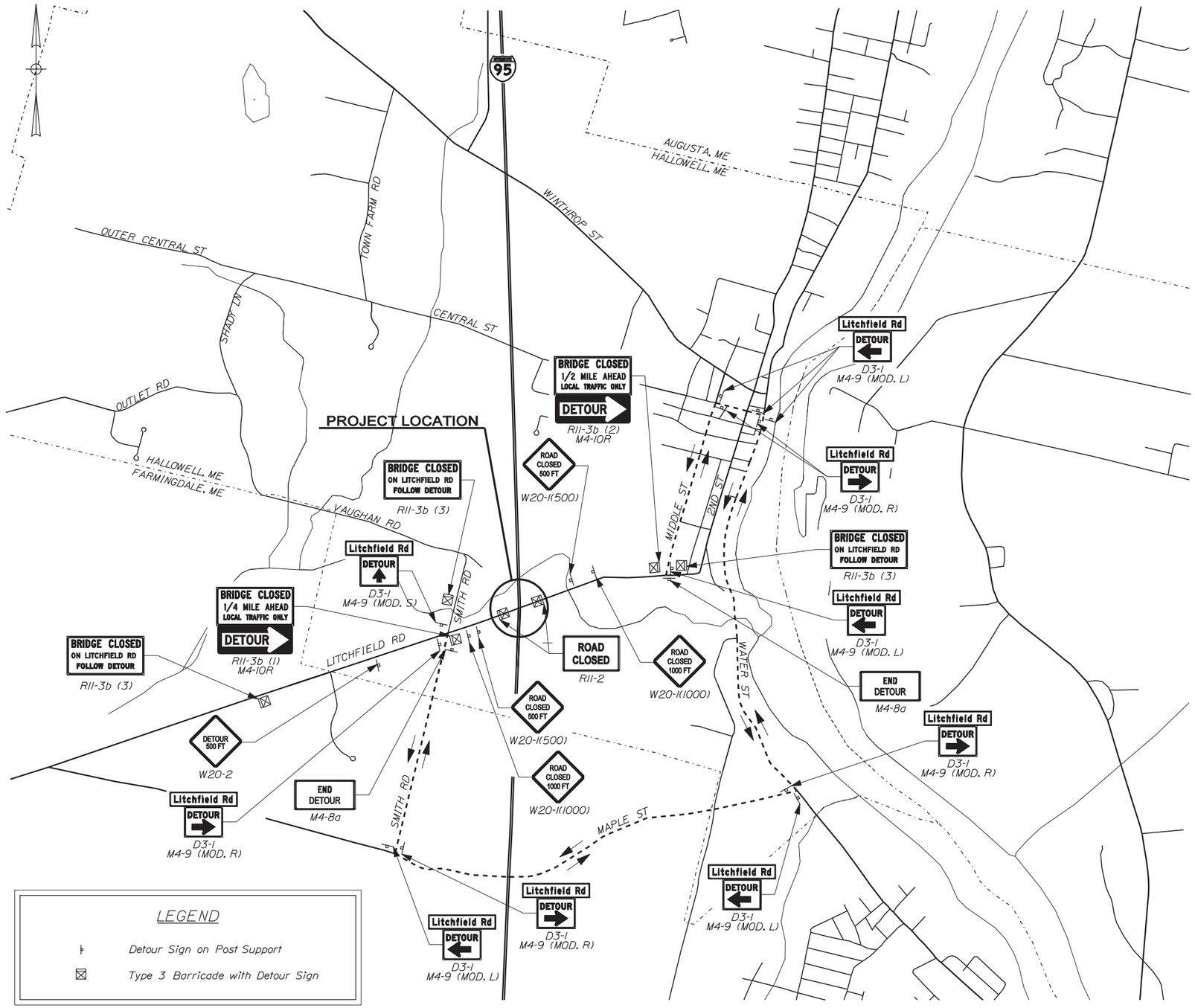

LEGEND

- Detour Sign on Post Support
- Type 3 Barricade with Detour Sign

Date:12/13/2013

Filename: ...\cad\st\planset\019_detour.dgn

Scale: NOT TO SCALE

No.	Revision	By	Date

Designed by:

Vanasse Hangen Brustlin, Inc.

CONSULTANT PROJECT MANAGER: T. Bryant

	By	Date		By	Date
Designed	KZS	12/13	Checked	SMH	12/13
Drawn	JAR	12/13	In Charge of	MDS	12/13

VANASSE HANGEN BRUSTLIN, INC.
500 Southborough Dr.
Suite 105B
South Portland, ME 04106
TEL (207) 889-3150
FAX (207) 253-5596

MAINE TURNPIKE

THE GOLD STAR MEMORIAL HIGHWAY

MTA PROJECT MANAGER: Ralph C. Norwood IV

SUPERSTRUCTURE REPLACEMENT
LITCHFIELD ROAD UNDERPASS

DETOUR PLAN AND SIGN SUMMARY

SHEET NUMBER: 19

CONTRACT:2014.07

TEMPORARY TRAFFIC CONTROL GENERAL NOTES:

1. The traffic control plan for this project is to close the bridge to all traffic for the duration of construction. A temporary detour is proposed along Smith Road, Vaughan Road, Shady Lane, Central Street, Town Farm Road, Winthrop Street, and Middle Street to bypass the bridge. See Detour Plan (Sheet 19) for details.

2. All traffic control equipment and devices shall conform to the latest edition of the Maine Department of Transportation (MaineDOT) Standard Specifications and applicable traffic control standards and practices of the Maine Turnpike Authority (MTA).

3. All traffic control equipment and layouts shall conform to the 2009 edition of the Federal Highway Administration (FHWA) Manual on Uniform Traffic Control Devices (MUTCD), chapter 6. All traffic control signs, sign support structures, channelizing devices, flashing arrow panels (FAP), portable changeable message signs (PCMS), and other traffic control equipment along the roadside shall meet or exceed NCHRP 350 test level 3 (TL-3) requirements regardless of where implemented on the project.

4. All traffic control signs shall have super high intensity retroreflective sheeting (ASTM, Type VII or better) and shall be maintained in like-new condition. Placement of signs shall be adjusted to avoid obstructing existing signs and to ensure proper sight lines to the construction signs as determined by the Resident.

5. Any signs, equipment, or devices found to be damaged or unserviceable shall be replaced.

6. During night operations, temporary work lighting shall be directed away from approaching lanes of traffic.

7. Temporary lane closures will be required whenever work will occur within four feet of the I-95 traveled way. Temporary lane closures will be permitted, with advanced approval from 7:00 PM Sunday through 6:00 PM Friday. Temporary lane closures shall be removed if no work is occurring.

8. All lane closures shall require approval of the MTA a minimum of three working days in advance of the lane closure.

9. Contractor shall provide advanced notice of all road closures with PCMS at least seven working days prior to the proposed closure. PCMS for the bridge closure shall be placed within 500 feet of the bridge along Litchfield Road. PCMS for turnpike mainline road closures shall be placed at least 500 feet in advance of the Litchfield Road underpass at a location approved by the Resident.

10. For all full roadway closures or in the event that the lane closure(s) begin to cause back-ups in through traffic of more than five minutes, the Contractor shall deploy the additional signs as indicated in the single lane closure set-up details.

TURNPIKE SHOULDER CLOSURES

CONSTRUCTION SIGN SUMMARY

Sign		Text Dimensions (Inches) Letter Height	Text Dimensions (Inches) Vertical Spacing	Size	Quantity and Color
G20-2	END ROAD WORK	Text Dimensions Shall Conform to "Standard Highway Signs" - 2012		48"x24"	4 - Black on Orange
W20-1 (AHEAD)	ROAD WORK AHEAD			48"x48"	4 - Black on Orange
W21-5aL	LEFT SHOULDER CLOSED 1000 FT			48"x48"	4 - Black on Orange
W21-5aR	RIGHT SHOULDER CLOSED 1000 FT			48"x48"	4 - Black on Orange
W21-5bL	LEFT SHOULDER CLOSED			48"x48"	4 - Black on Orange
W21-5bR	RIGHT SHOULDER CLOSED			48"x48"	4 - Black on Orange

TEMPORARY LANE & ROADWAY CLOSURES

CONSTRUCTION SIGN SUMMARY

Sign		Text Dimensions (Inches) Letter Height	Text Dimensions (Inches) Vertical Spacing	Size	Quantity and Color
CS-3	EXPECT STOPPED TRAFFIC	7" 7" 7"	4" 4"	48"x48"	4 - Black on Orange
G20-5aP	WORK ZONE	Text Dimensions Shall Conform to "Standard Highway Signs" - 2012		36"x24"	4 - Black on Orange
R2-1(50)	SPEED LIMIT 50			36"x48"	4 - Black on White
R2-6aP	FINES DOUBLE			36"x24"	4 - Black on White
R2-12	END WORK ZONE SPEED LIMIT			36"x54"	4 - Black on White
W3-4	BE PREPARED TO STOP			48"x48"	4 - Black on Orange
W3-5(50)	SPEED LIMIT 50			48"x48"	4 - Black on Orange
W4-2(L)				48"x48"	4 - Black on Orange
W4-2(R)				48"x48"	4 - Black on Orange
W20-1 (1 MILE)	ROAD WORK 1 MILE			48"x48"	4 - Black on Orange
W20-5L	LEFT LANE CLOSED ½ MILE			48"x48"	4 - Black on Orange
W20-5R	RIGHT LANE CLOSED ½ MILE			48"x48"	4 - Black on Orange

ABBREVIATIONS FOR ALL WORK ZONE PLANS

BWLL = BROKEN WHITE LANE LINE
SWEL = SOLID WHITE EDGE LINE
SYEL = SOLID YELLOW EDGE LINE

Date:12/13/2013

Filename: ...\st\planset\020_workzone_01.dgn

Scale: NOT TO SCALE

No.	Revision	By	Date

Designed by:

Vanasse Hangen Brustlin, Inc.

CONSULTANT PROJECT MANAGER: T. Bryant

	By	Date		By	Date
Designed	KZS	12/13	Checked	SMH	12/13
Drawn	JAR	12/13	In Charge of	MDS	12/13

VANASSE HANGEN BRUSTLIN, INC.
500 Southborough Dr.
Suite 105B
South Portland, ME 04106
TEL (207) 889-3150
FAX (207) 253-5596

MAINE TURNPIKE

THE GOLD STAR MEMORIAL HIGHWAY

MTA PROJECT MANAGER: Ralph C. Norwood IV

SUPERSTRUCTURE REPLACEMENT
LITCHFIELD ROAD UNDERPASS

WORK ZONE PLANS
(1 OF 2)

SHEET NUMBER: 20

CONTRACT:2014.07

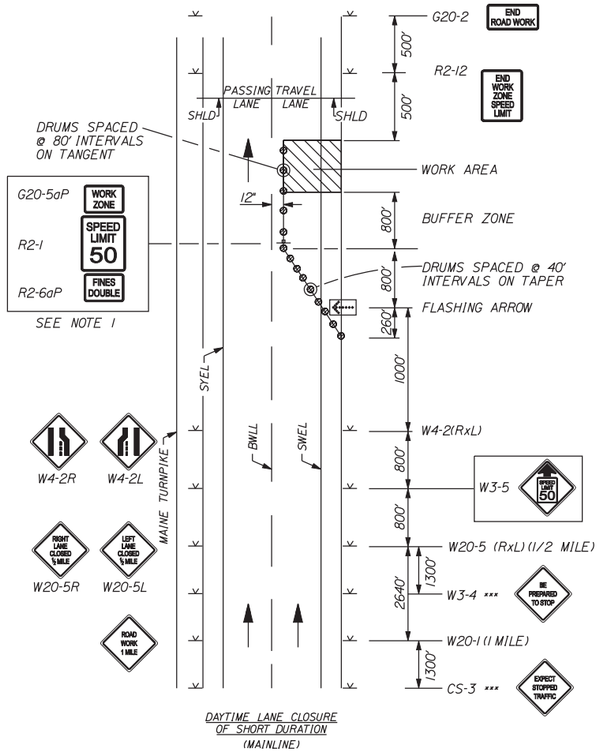

DAYTIME LANE CLOSURE OF SHORT DURATION (MAINLINE)

SINGLE LANE CLOSURE SIGNS ON EASELS

1. FOR EASEL SET UP ONLY. THIS SIGN IS NOT BRACKETED. ONE SIGN ASSEMBLY IS PLACED AT THE END OF THE TAPER. SIGNS MAY BE SPLIT ONTO TWO EASELS.

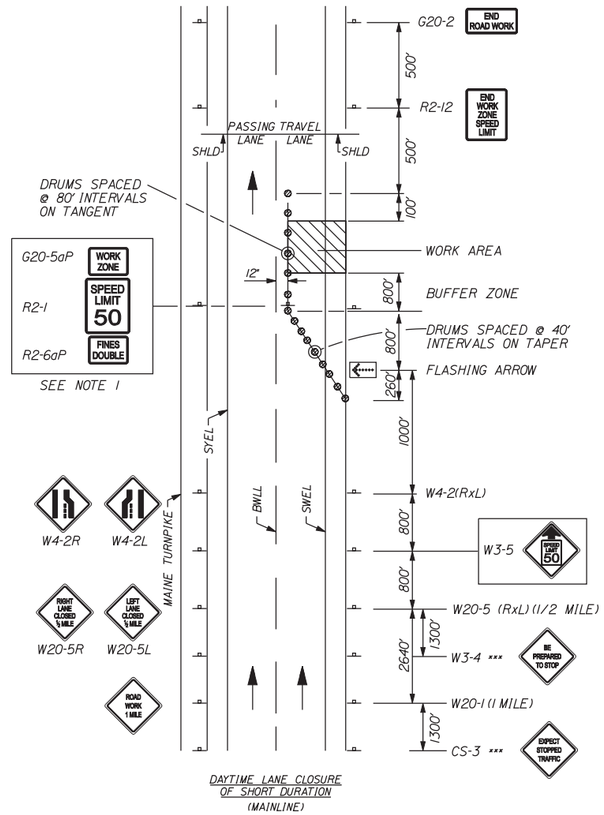

DAYTIME LANE CLOSURE OF SHORT DURATION (MAINLINE)

SINGLE LANE CLOSURE POST MOUNTED SIGN SETUP

1. POST MOUNTED SIGNS SHALL BE COVERED WHEN LANE CLOSURE IS REMOVED.

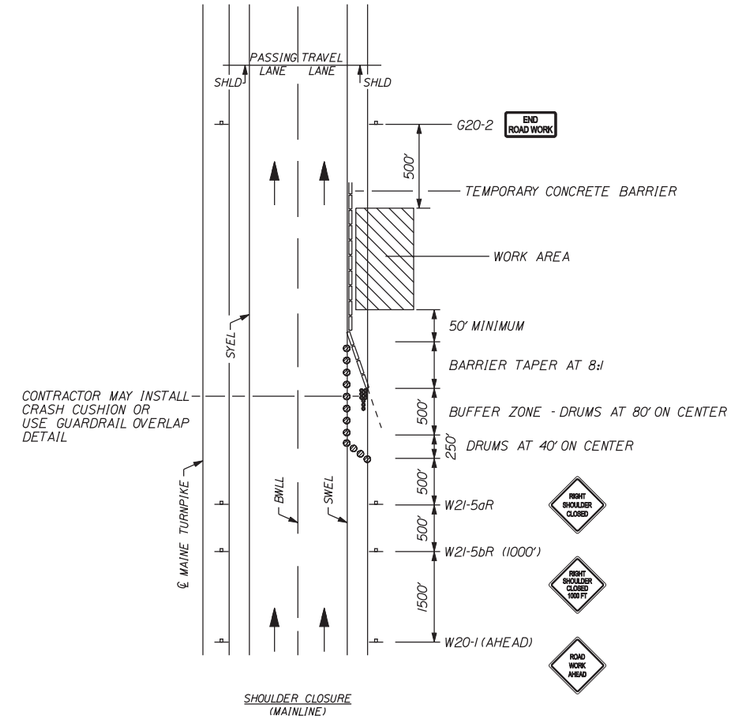

SHOULDER CLOSURE (MAINLINE)

SHOULDER CLOSURE

1. THE W20-1 AND G20-2 SIGNS ARE NOT REQUIRED IF THE SHOULDER CLOSURE IS WITHIN A PREVIOUSLY ESTABLISHED WORK ZONE.

GENERAL NOTES:

1. FOR SIGN DETAILS, SEE CONSTRUCTION SIGN SUMMARY.
2. SIGNS DESIGNATED WITH *** SHALL BE USED DURING STOPPAGES OF TRAFFIC.
3. WHEN TRUCK MOUNTED ATTENUATORS ARE INCLUDED IN THE CONTRACT (INCIDENTAL OR PAY ITEM), THEY SHALL NOT BE LOCATED IN THE BUFFER ZONE.

LEGEND

- Construction Sign on Post Support
- Construction Sign on Easel
- Drums/Channelizing Devices
- Temporary Concrete Barrier, Type 1
- Temporary Impact Attenuator
- Work Area
- Type 3 Barricade with Sign
- Type 3 Barricade

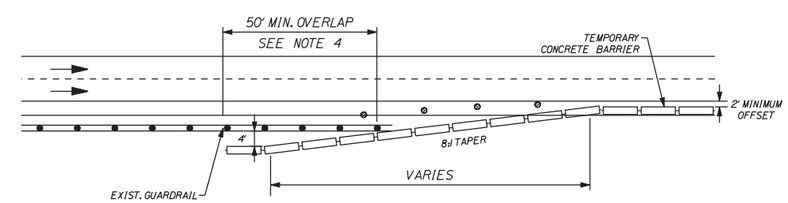

CONCRETE BARRIER / GUARDRAIL OVERLAP DETAIL

NOTES:

1. BARRIER ENDS WITHIN THE HIGHWAY CLEAR ZONE SHALL BE PROTECTED BY A TEMPORARY IMPACT ATTENUATOR OR LAPPED BEHIND GUARDRAIL.
2. IF A TEMPORARY WORK ZONE CRASH CUSHION IS USED, THE WORK ZONE CRASH CUSHION SYSTEM MUST BE FOUNDED ON A LEVEL SURFACE. ANY WORK NECESSARY TO PROVIDE A LEVEL SURFACE WILL BE INCIDENTAL TO THE WORK ZONE CRASH CUSHION ITEM.

Date:12/13/2013

Filename: ...\st\planset\021_workzone_02.dgn

Scale: NOT TO SCALE

No.	Revision	By	Date

Designed by:

Vanasse Hangen Brustlin, Inc.

CONSULTANT PROJECT MANAGER: T. Bryant

	By	Date		By	Date
Designed	KZS	12/13	Checked	SMH	12/13
Drawn	JAR	12/13	In Charge of	MDS	12/13

VANASSE HANGEN BRUSTLIN, INC.
500 Southborough Dr.
Suite 105B
South Portland, ME 04106
TEL (207) 889-3150
FAX (207) 253-5596

MAINE TURNPIKE

THE GOLD STAR MEMORIAL HIGHWAY

MTA PROJECT MANAGER: Ralph C. Norwood IV

SUPERSTRUCTURE REPLACEMENT
LITCHFIELD ROAD UNDERPASS

WORK ZONE PLANS
(2 OF 2)

SHEET NUMBER: 21

CONTRACT: 2014.07

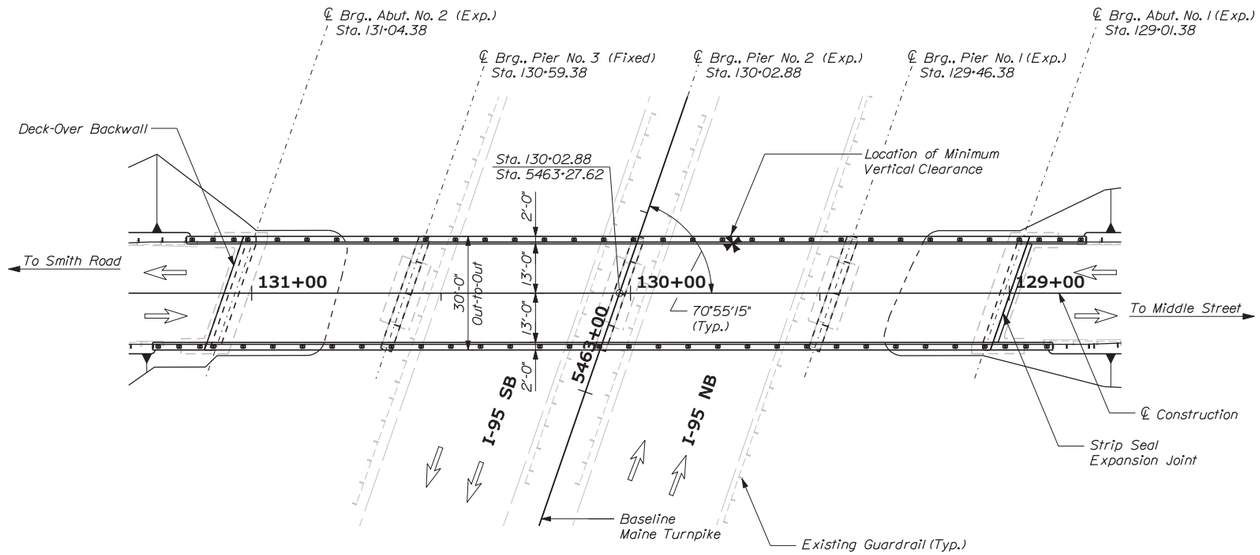

PLAN

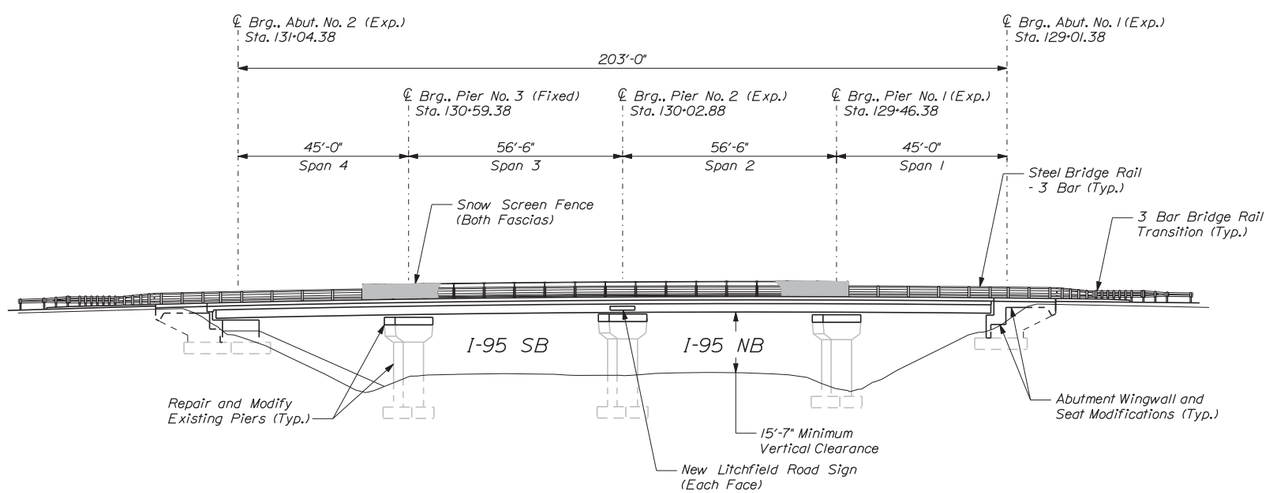

ELEVATION
(Existing Guardrail not Shown)

SPECIFICATIONS

Design: AASHTO LRFD Bridge Design Specifications, 2012 and Interims Through 2013
Construction: State of Maine Department of Transportation Standard Specifications, Revision of December 2002.

State of Maine Department of Transportation Standard Details for Highways and Bridges, Revision of December of 2002, with all revisions thereto.

AASHTO LRFD Bridge Construction Specifications, Third Edition with 2012 Interims

DESIGN LOADING

Live Load ..... HL - 93

MATERIALS

Concrete (Unless noted otherwise) ..... Class AAA
Concrete (Precast) ..... Class P
Concrete (Deck) ..... Class "AAA" - Deck
Reinforcing Steel ..... ASTM A615/A615M, Grade 60 (Epoxy Coated, Unless Otherwise Noted)

Structural Steel:
All Material (except as noted) ..... ASTM A709/A709M, Grade 50W
High Strength Bolts (except as noted) ..... ASTM A325, Type 3
Prestressing Strand ..... AASHTO M203 (ASTM A416), Grade 270, Low Relaxation

BASIC DESIGN STRESSES

Concrete ..... f 'c = 4,500 psi
Concrete (Precast) ..... f 'c = 5,000 psi
f 'ci = 4,000 psi
Reinforcing Steel ..... f y = 60,000 psi
Structural Steel:
ASTM A 709/A 709M, Grade 50W ..... F y = 50,000 psi
ASTM A 709/A 709M, Grade 36 ..... F y = 36,000 psi
ASTM A 325 ..... F μ = 120,000 psi
Prestressing Strand ..... F μ = 270,000 psi

TRAFFIC DATA - LITCHFIELD ROAD

AADT 1624
Heavy Trucks (% AADT) 5
Design Speed (MPH) 45
Functional Class ..... Major Collector

Scale: 20 0 20 40
Scale of Feet

No.	Revision	By	Date

Designed by:
Vanasse Hangen Brustlin, Inc.

CONSULTANT PROJECT MANAGER: T. Bryant

	By	Date		By	Date
Designed	KZS	12/13	Checked	SMH	12/13
Drawn	CMD	12/13	In Charge of	TSB	12/13

VANASSE HANGEN BRUSTLIN, INC.
500 Southborough Dr.
Suite 105B
South Portland, ME 04106
TEL (207) 889-3150
FAX (207) 253-5596

MAINE TURNPIKE
THE GOLD STAR MEMORIAL HIGHWAY

MTA PROJECT MANAGER: Ralph C. Norwood IV

SUPERSTRUCTURE REPLACEMENT
LITCHFIELD ROAD UNDERPASS

BRIDGE PLAN AND ELEVATION

SHEET NUMBER: 22

CONTRACT:2014.07

Date:12/13/2013
Filename: ...\cad\st\planset\022_genplan.dgn

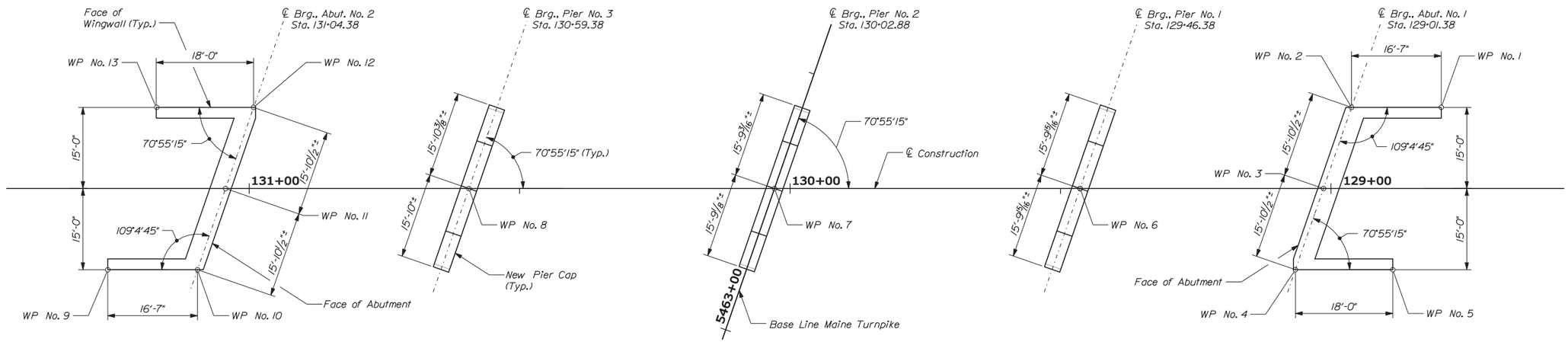

SURVEY LAYOUT

BRIDGE LAYOUT NOTES:

1. The centerline construction location and alignment of Litchfield Road is based on existing plans and survey points obtained at pier caps and wingwalls.

WP No.	Northing	Easting
1	526349.4091	3047250.3532
2	526343.6739	3047234.7932
3	526327.8013	3047235.1129
4	526311.9326	3047235.4326
5	526318.1578	3047252.3219
6	526312.2383	3047192.8898
7	526292.6981	3047139.8763
8	526273.1579	3047086.8628
9	526235.9871	3047029.3994
10	526241.7223	3047044.9594
11	526257.5949	3047044.6397
12	526273.4636	3047044.3200
13	526267.2384	3047027.4307

Date:12/13/2013

Filename: ...\st\planset\023_survey_01.dgn

Scale: 3/32" = 1'-0"

No.	Revision	By	Date

Designed by:

VHB Vanasse Hangen Brustlin, Inc.

CONSULTANT PROJECT MANAGER: T. Bryant

	By	Date		By	Date
Designed	KZS	12/13	Checked	SMH	12/13
Drawn	CMD	12/13	In Charge of	TSB	12/13

VANASSE HANGEN BRUSTLIN, INC.
500 Southborough Dr.
Suite 105B
South Portland, ME 04106
TEL (207) 889-3150
FAX (207) 253-5596

MAINE TURNPIKE

THE GOLD STAR MEMORIAL HIGHWAY

MTA PROJECT MANAGER: Ralph C. Norwood IV

SUPERSTRUCTURE REPLACEMENT
LITCHFIELD ROAD UNDERPASS

BRIDGE SURVEY LAYOUT PLAN

SHEET NUMBER: 23

CONTRACT:2014.07

ABUTMENT REMOVAL NOTES:

1. Abutment concrete repairs will be paid under Item 518.6313, Abutment Repairs.
2. Contractor shall remove tactyl (bituminous) coating from remaining exposed abutment surfaces where present to finished grade or existing ground (whichever is lower). Cost included in Item 518.6313.
3. Concrete demolition, which generally includes portions of wingwalls, portions of bridge seat, and abutment backwalls, will be measured for payment under pay Item 202.17, Removing Existing Structural Concrete. This work shall include sawcutting and removing existing concrete and reinforcing steel to the limits shown in the plans.
4. Excavation required to complete partial abutment removal and construction will not be measured for payment and considered incidental to Item 202.17. Backfill of the repair areas shall be measured for payment under pay Item 203.25, Granular Borrow as shown in the plans.

CONCRETE SURFACE REPAIR NOTES:

1. Prior to the start of concrete removal the Resident and the Contractor shall sound the concrete and agree on the repair limits. Estimated repair quantity may increase at the Resident's discretion.
2. Perform 1" deep saw cuts along limits of removal.
3. Chip concrete to depth shown. If the removal limits change during the demolition process the Contractor shall notify the Resident. The Resident and Contractor shall agree on the revised pay limits prior to the Contractor continuing the removal.
4. Prepare and patch repair areas with Class AAA modified concrete.
5. Perform general finishing.

DEMOLITION QUANTITY (CY)

Removing Existing Structural Concrete	17.5

REPAIR QUANTITY (SF)

Surface Patch Repair	* 10

* Contingency Quantity

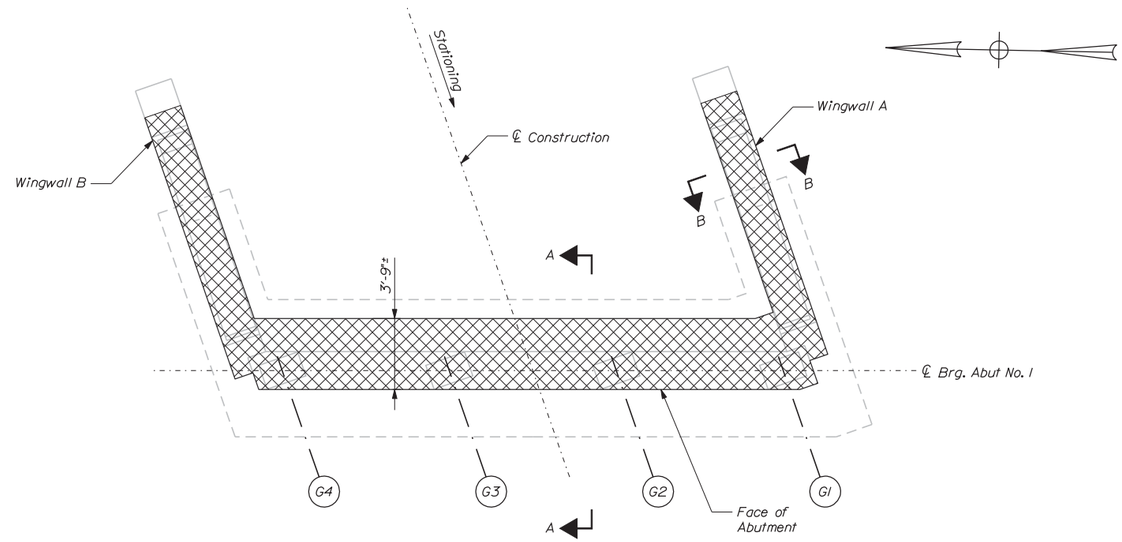

PLAN
Scale: 1/4" = 1'-0"

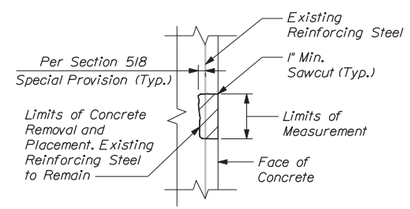

CONCRETE SURFACE REPAIR DETAIL
Scale: 1" = 1'-0"

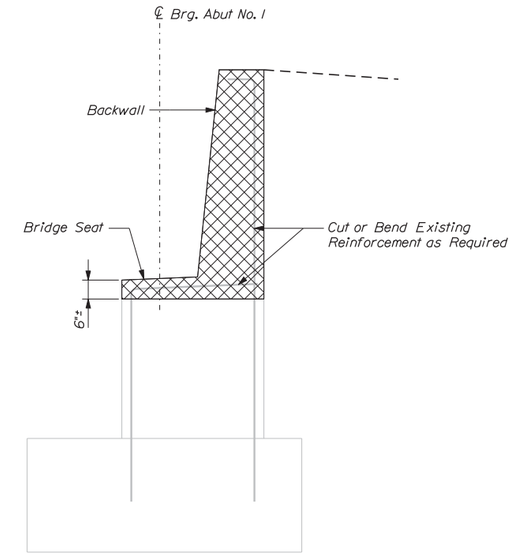

SECTION A-A
Scale: 1/2" = 1'-0"

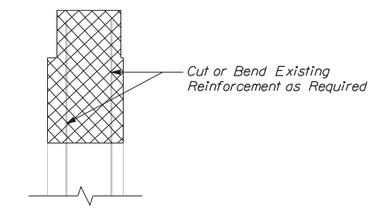

SECTION B-B
Scale: 1/2" = 1'-0"

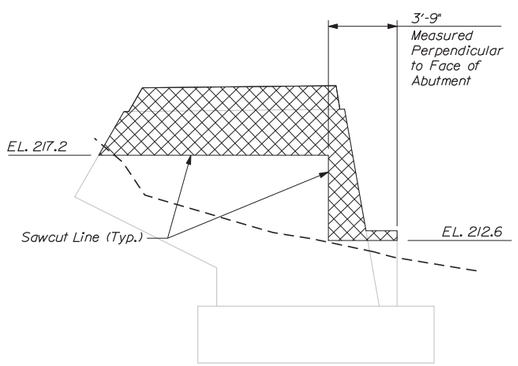

ELEVATION
WINGWALL B
Scale: 1/4" = 1'-0"

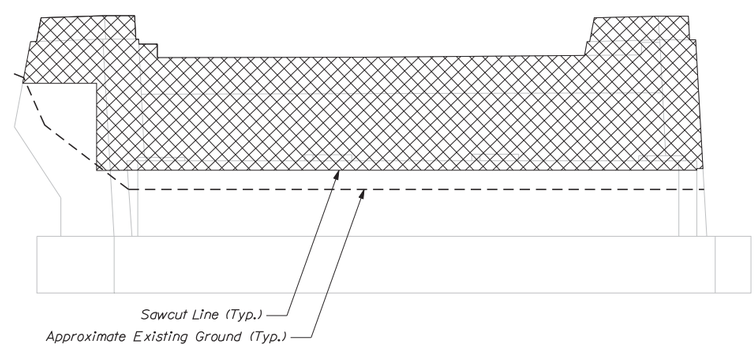

ELEVATION
Scale: 1/4" = 1'-0"

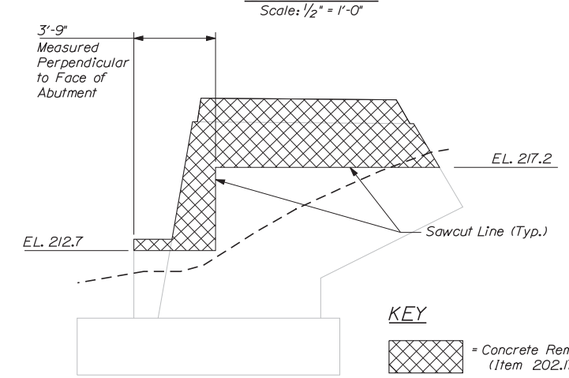

ELEVATION
WINGWALL A
Scale: 1/4" = 1'-0"

KEY

= Concrete Removal (Item 202.17)

= Surface Patch Repair (Item 518.6313)

= Square Foot Area of Repair

Date:12/13/2013

Filename: ...\st\planset\024_abut1_01.dgn

Scale: AS NOTED

No.	Revision	By	Date

Designed by:

Vanasse Hangen Brustlin, Inc.

CONSULTANT PROJECT MANAGER: T. Bryant

	By	Date		By	Date
Designed	KZS	12/13	Checked	SMH	12/13
Drawn	CMD	12/13	In Charge of	TSB	12/13

VANASSE HANGEN BRUSTLIN, INC.
500 Southborough Dr.
Suite 105B
South Portland, ME 04106
TEL (207) 889-3150
FAX (207) 253-5596

MAINE TURNPIKE

THE GOLD STAR MEMORIAL HIGHWAY

MTA PROJECT MANAGER: Ralph C. Norwood IV

SUPERSTRUCTURE REPLACEMENT
LITCHFIELD ROAD UNDERPASS

ABUTMENT 1
REMOVAL AND REPAIR

SHEET NUMBER: 24

CONTRACT:2014.07

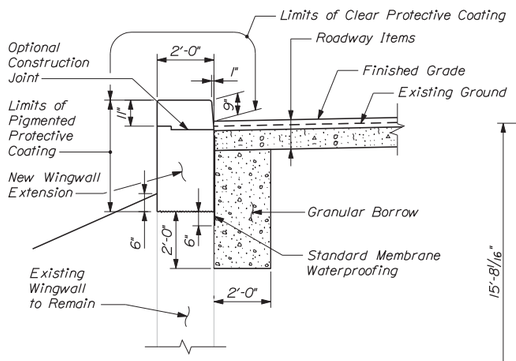

SECTION B-B
Scale: 3/8" = 1'-0"

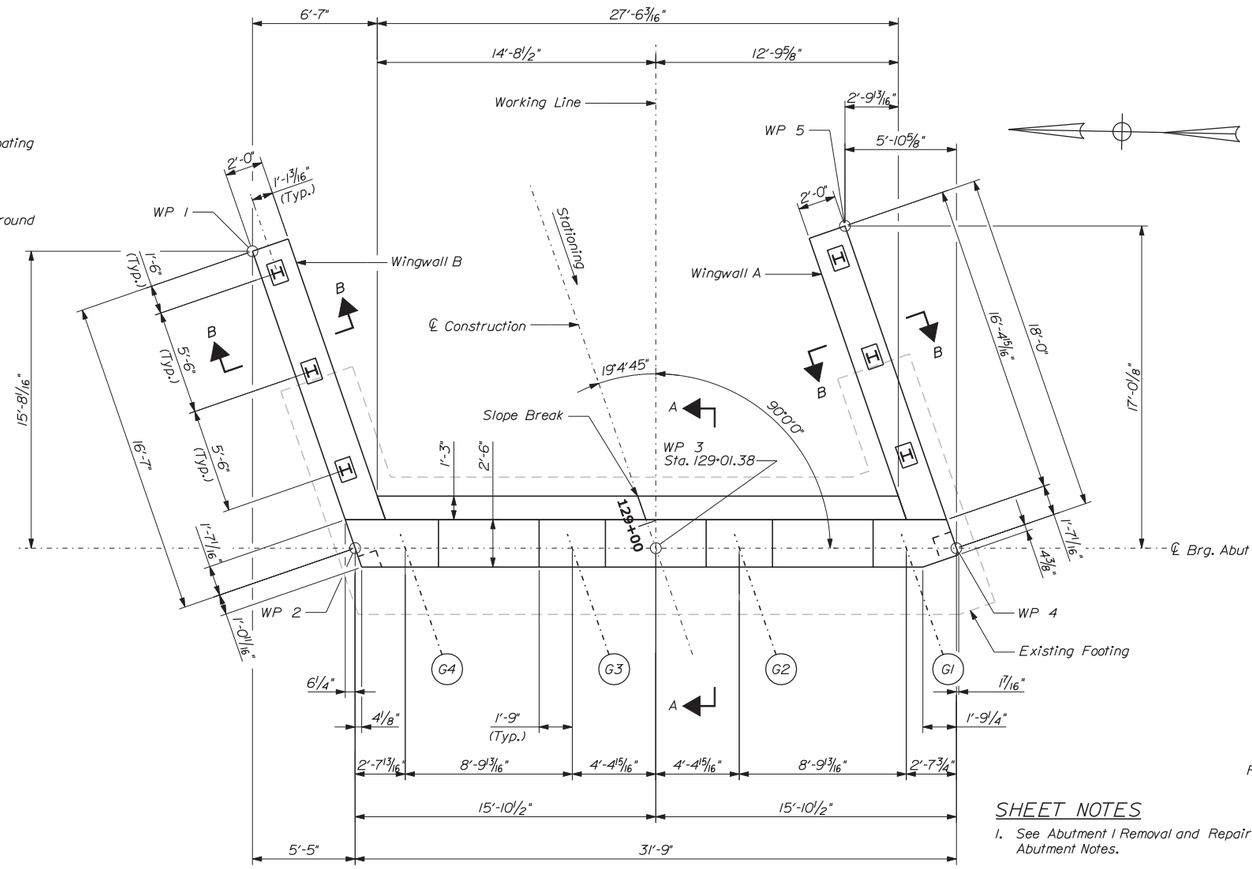

PLAN
Scale: 1/4" = 1'-0"

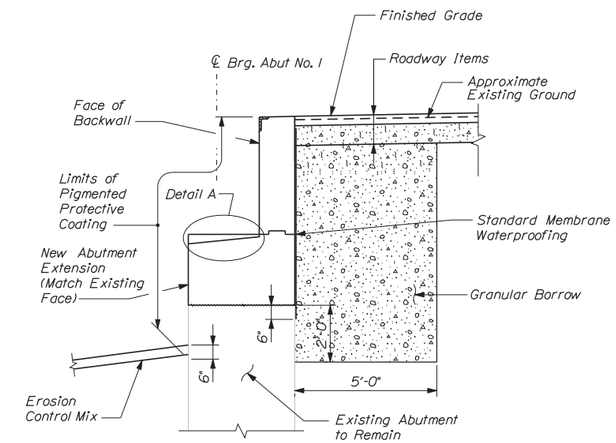

SECTION A-A
Scale: 3/8" = 1'-0"

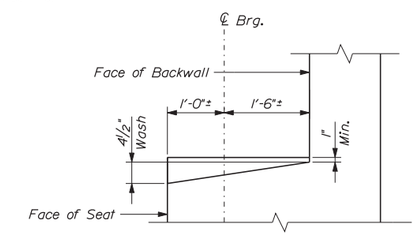

DETAIL A
Scale: 3/4" = 1'-0"

SHEET NOTES

1. See Abutment 1 Removal and Repair Sheet for Abutment Notes.
2. See Abutment 1 Reinforcement Sheet for Abutment Construction Notes.
3. See Abutment Wingwalls Sheet for Wingwall Reinforcement.
4. All elevations are top off concrete unless noted otherwise.

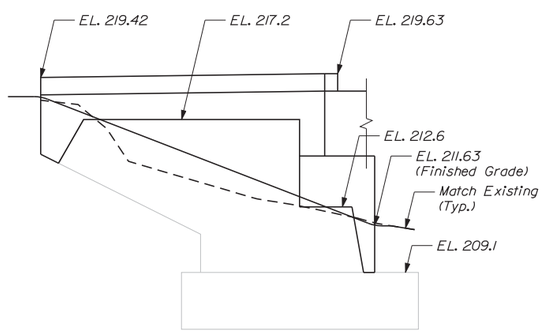

ELEVATION
WINGWALL B
Scale: 1/4" = 1'-0"

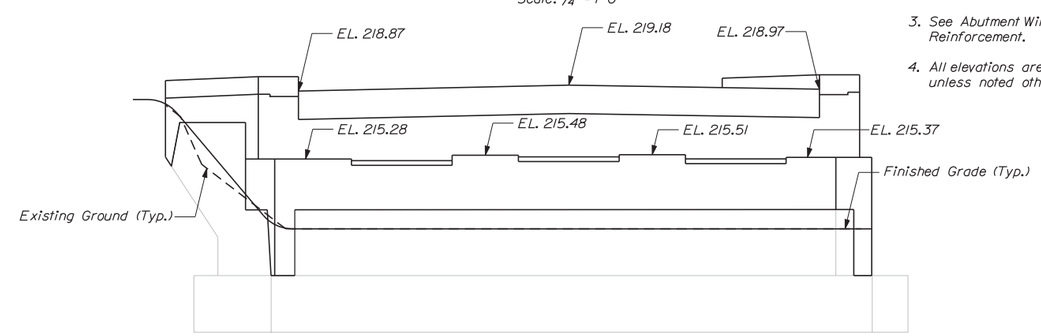

ELEVATION
Scale: 1/4" = 1'-0"

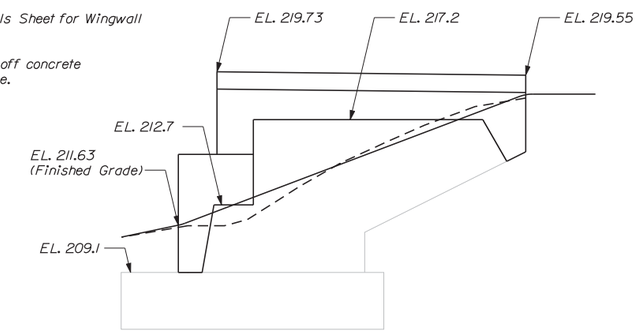

ELEVATION
WINGWALL A
Scale: 1/4" = 1'-0"

Date:12/13/2013

Filename: ...\st\planset\025_abut1_02.dgn

Scale: AS NOTED

No.	Revision	By	Date

Designed by:

VHB Vanasse Hangen Brustlin, Inc.

CONSULTANT PROJECT MANAGER: T. Bryant

	By	Date		By	Date
Designed	KZS	12/13	Checked	SMH	12/13
Drawn	CMD	12/13	In Charge of	TSB	12/13

VANASSE HANGEN BRUSTLIN, INC.
500 Southborough Dr.
Suite 105B
South Portland, ME 04106
TEL (207) 889-3150
FAX (207) 253-5596

MAINE TURNPIKE

THE GOLD STAR MEMORIAL HIGHWAY

MTA PROJECT MANAGER: Ralph C. Norwood IV

SUPERSTRUCTURE REPLACEMENT
LITCHFIELD ROAD UNDERPASS

ABUTMENT 1
MODIFICATIONS

SHEET NUMBER: 25

CONTRACT:2014.07

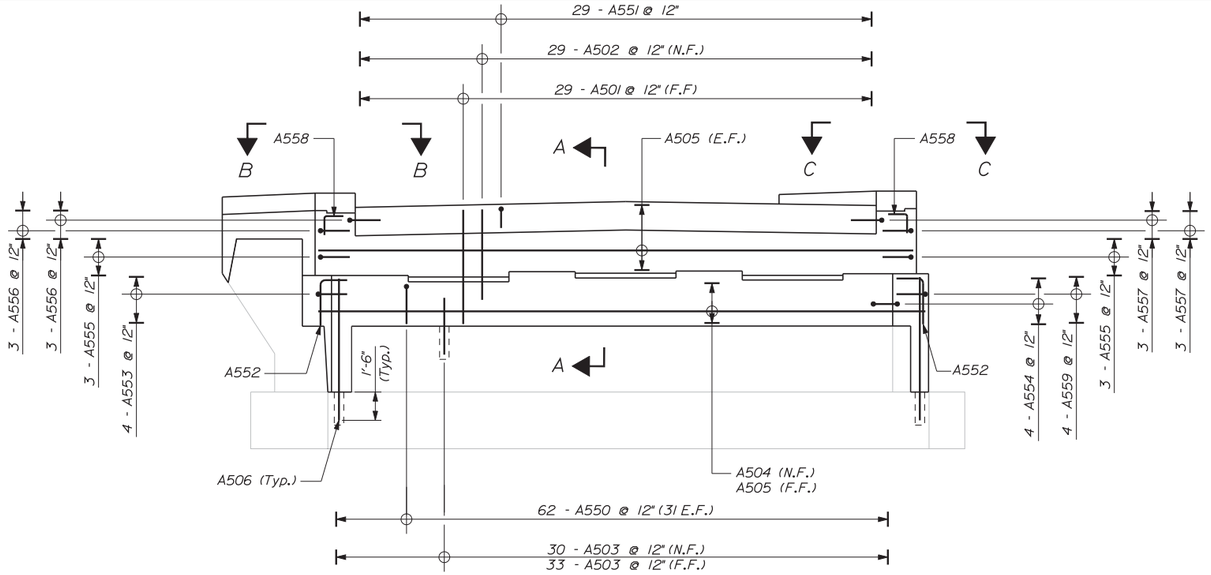

ELEVATION
Scale: 1/4" = 1'-0"

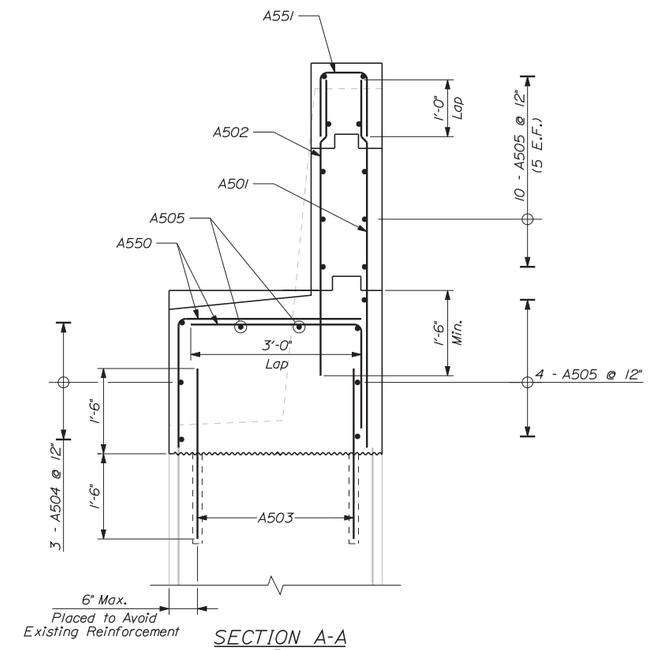

SECTION A-A
Scale: 3/4" = 1'-0"

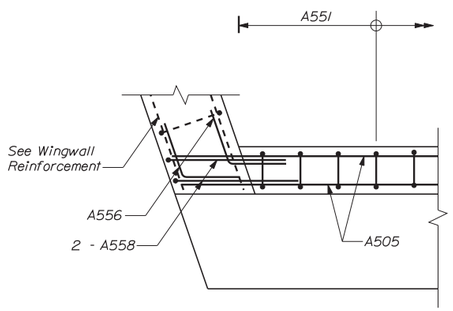

AT BACKWALL

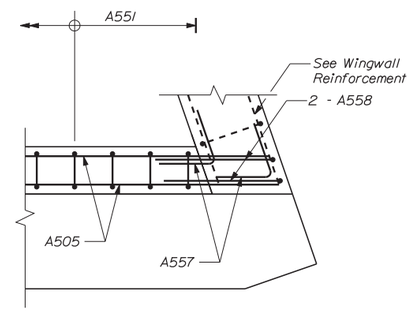

AT BACKWALL

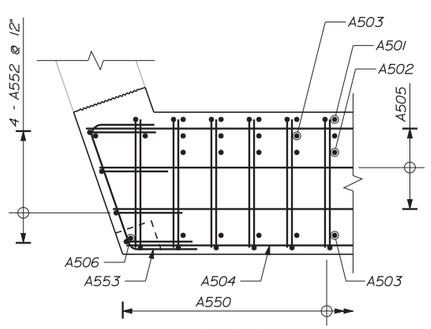

AT SEAT

SECTION B-B
Scale: 1/2" = 1'-0"

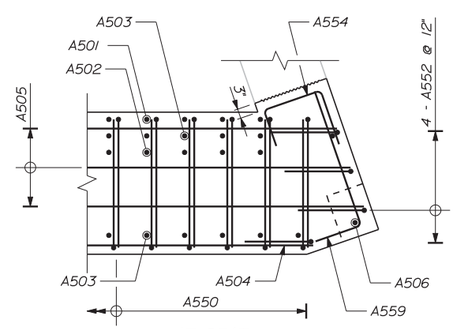

AT SEAT

SECTION C-C
Scale: 1/2" = 1'-0"

ABUTMENT CONSTRUCTION NOTES:

1. Remove abutment seat concrete and reinforcing steel within the limits shown, including bearing anchor bolts. Retain and protect existing reinforcing steel where noted.
2. Install new reinforcing steel, drill and grout bars into existing concrete as required.
3. Install form work and fill forms with class AAA modified concrete. Bearing pedestals shall be cast monolithically with the abutment seat concrete.
4. Perform general finishing.
5. Bearing anchor rods shall be placed prior to installing diaphragms.

REINFORCING KEY

N.F. = Near Face
F.F. = Far Face
E.F. = Each Face
▲ = Cut in Field

Date:12/13/2013

Filename: ...\st\planset\026_abut1_03.dgn

Scale: AS NOTED

No.	Revision	By	Date

Designed by:

Vanasse Hangen Brustlin, Inc.

CONSULTANT PROJECT MANAGER: T. Bryant

	By	Date		By	Date
Designed	KZS	12/13	Checked	SMH	12/13
Drawn	CMD	12/13	In Charge of	TSB	12/13

VANASSE HANGEN BRUSTLIN, INC.
500 Southborough Dr.
Suite 105B
South Portland, ME 04106
TEL (207) 889-3150
FAX (207) 253-5596

MAINE TURNPIKE

THE GOLD STAR MEMORIAL HIGHWAY

MTA PROJECT MANAGER: Ralph C. Norwood IV

SUPERSTRUCTURE REPLACEMENT
LITCHFIELD ROAD UNDERPASS

ABUTMENT 1
REINFORCEMENT

SHEET NUMBER: 26

CONTRACT:2014.07

Date:12/13/2013

NOTE:

1. See Abutment 1 Removal and Repair Sheet for Abutment Removal and Concrete Repair Notes.

DEMOLITION QUANTITY (CY)

Removing Existing Structural Concrete	17.5

REPAIR QUANTITY (SF)

Surface Patch Repair	* 10

* Contingency Quantity

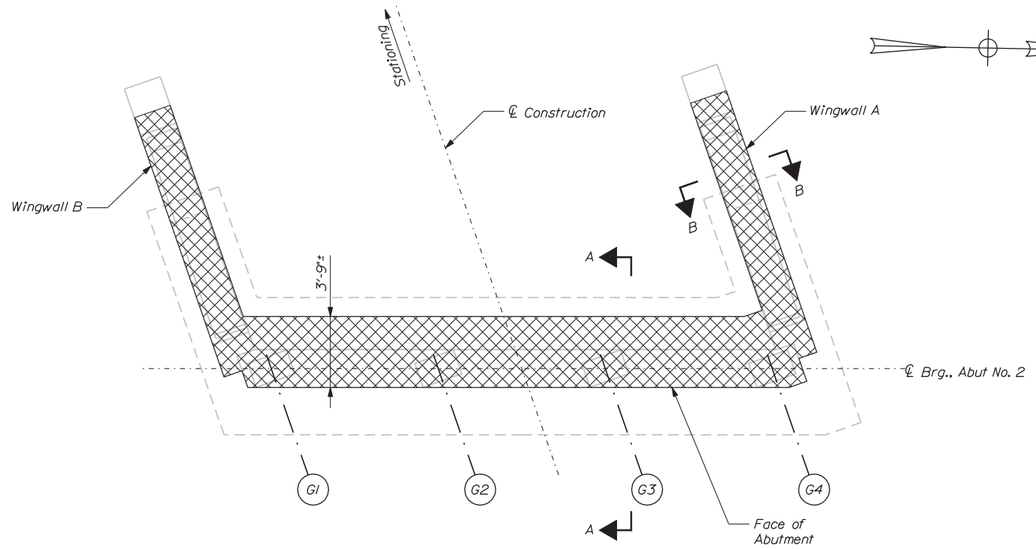

PLAN
Scale: 1/4" = 1'-0"

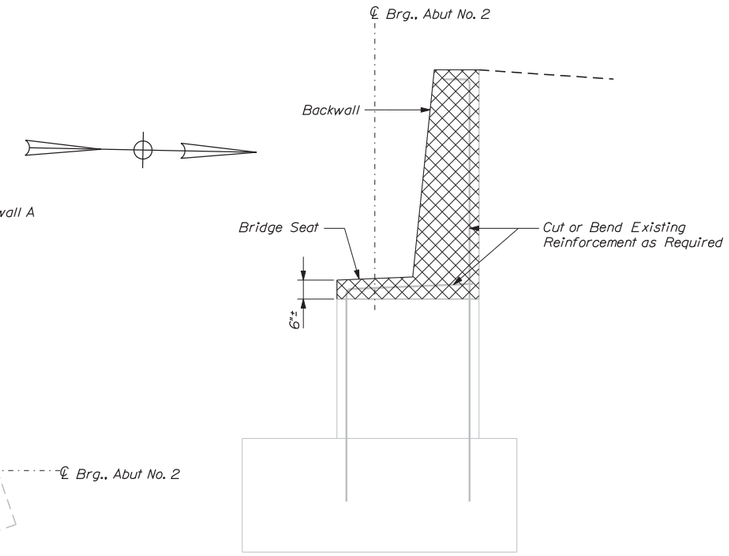

SECTION A-A
Scale: 1/2" = 1'-0"

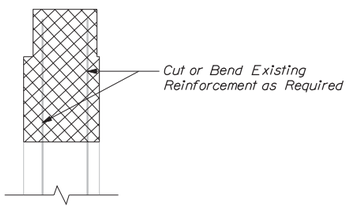

SECTION B-B
Scale: 1/2" = 1'-0"

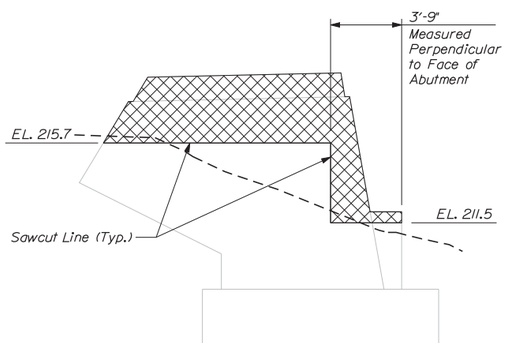

ELEVATION
WINGWALL B
Scale: 1/4" = 1'-0"

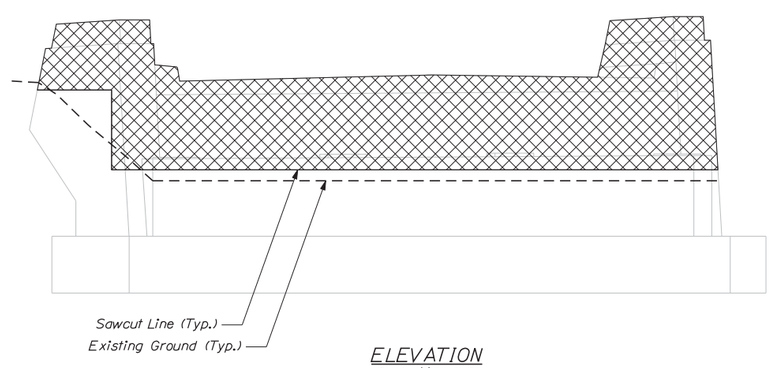

ELEVATION
Scale: 1/4" = 1'-0"

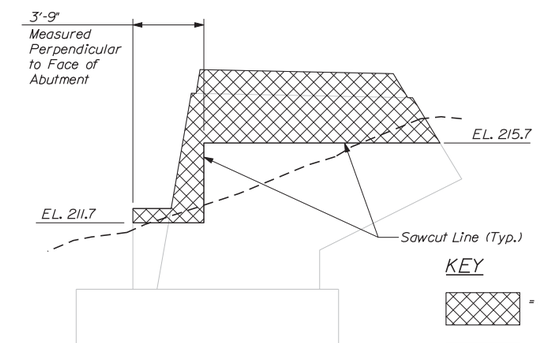

ELEVATION
WINGWALL A
Scale: 1/4" = 1'-0"

KEY

= Concrete Removal (Item 202.17)

= Surface Patch Repair (Item 518.6313)

\# = Square Foot Area of Repair

Scale: AS NOTED

No.	Revision	By	Date

Designed by:

Vanasse Hangen Brustlin, Inc.

CONSULTANT PROJECT MANAGER: T. Bryant

	By	Date		By	Date
Designed	KZS	12/13	Checked	SMH	12/13
Drawn	CMD	12/13	In Charge of	TSB	12/13

VANASSE HANGEN BRUSTLIN, INC.
500 Southborough Dr.
Suite 105B
South Portland, ME 04106
TEL (207) 889-3150
FAX (207) 253-5596

MAINE TURNPIKE

THE GOLD STAR MEMORIAL HIGHWAY

MTA PROJECT MANAGER: Ralph C. Norwood IV

SUPERSTRUCTURE REPLACEMENT
LITCHFIELD ROAD UNDERPASS

ABUTMENT 2
REMOVAL AND REPAIR

SHEET NUMBER: 27

CONTRACT:2014.07

Filename: ...\st\planset\027_abut2_01.dgn

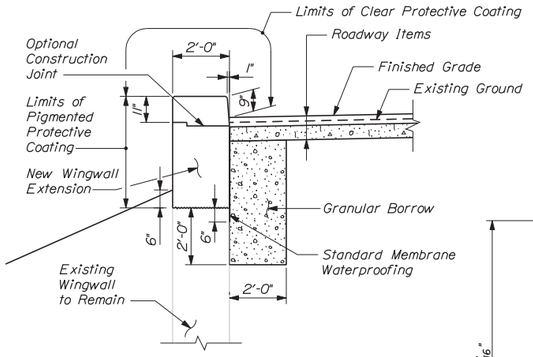

SECTION B-B
Scale: 3/8" = 1'-0"

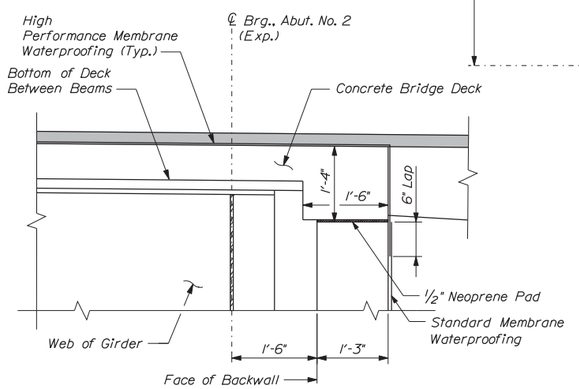

DECK OVER BACKWALL DETAIL
Scale: 3/4" = 1'-0"

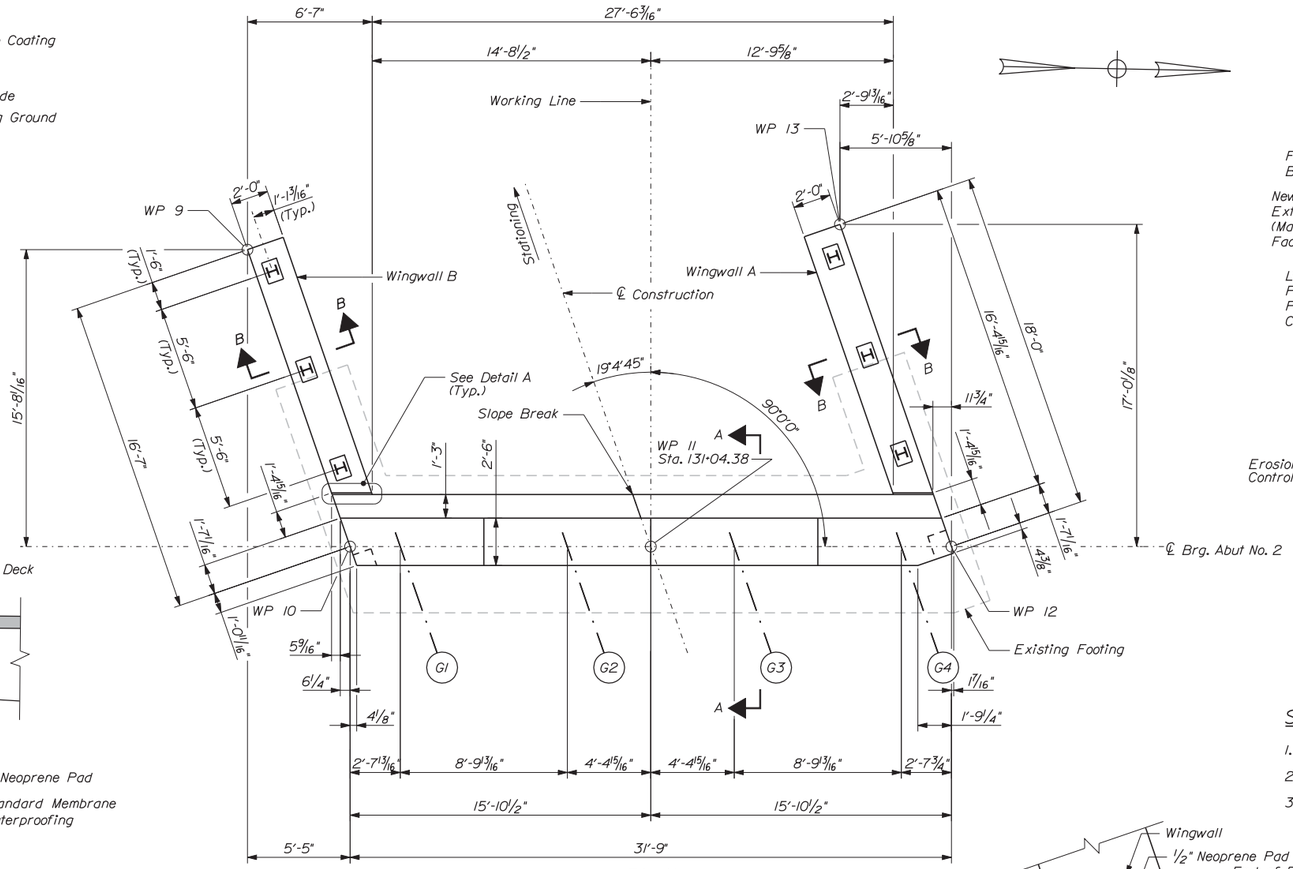

PLAN
Scale: 1/4" = 1'-0"

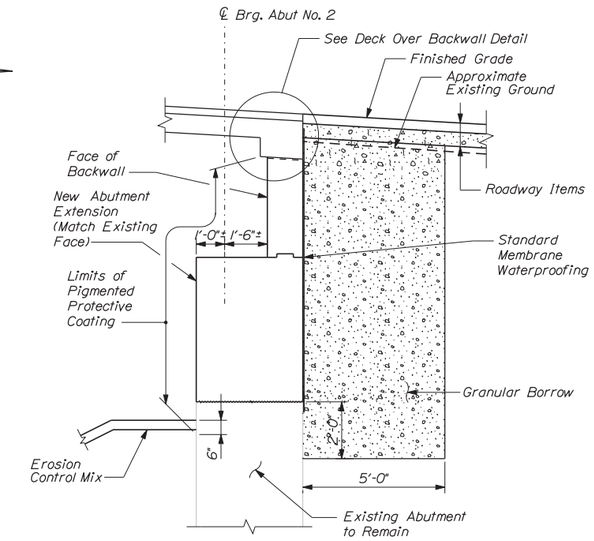

SECTION A-A
Scale: 3/8" = 1'-0"

SHEET NOTES:

1. See Abutment I Removal and Repair Sheet for Abutment Notes.
2. See Abutment I Reinforcement Sheet for Abutment Construction Notes.
3. All elevations are top of concrete, unless noted otherwise.

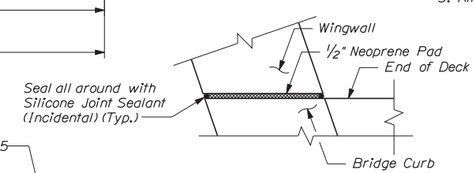

DETAIL A
Scale: 3/4" = 1'-0"

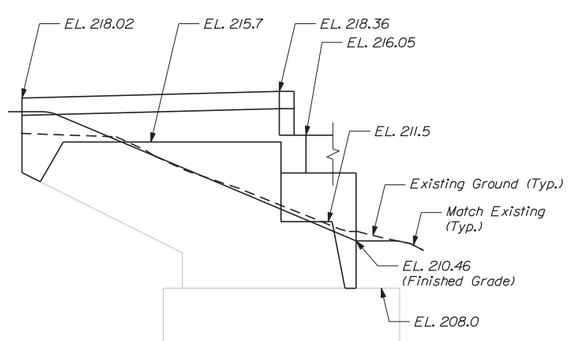

ELEVATION
WINGWALL B
Scale: 1/4" = 1'-0"

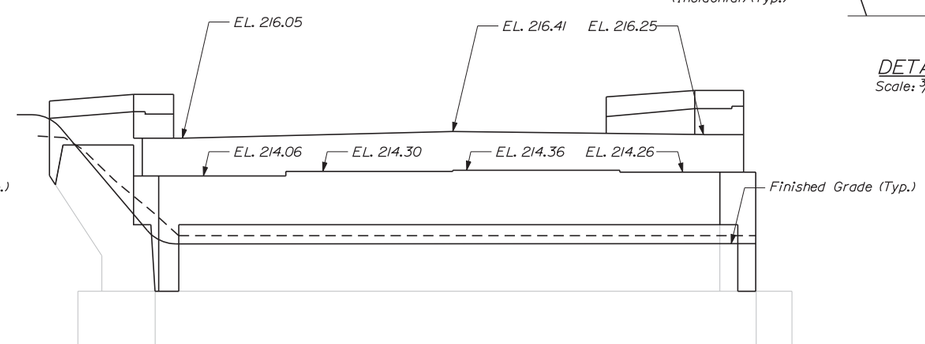

ELEVATION
Scale: 1/4" = 1'-0"

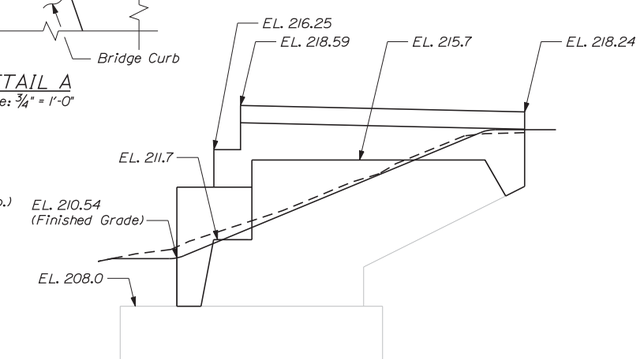

ELEVATION
WINGWALL A
Scale: 1/4" = 1'-0"

Date:12/13/2013

Filename: ...\st\planset\028_abut2_02.dgn

Scale: AS NOTED

No.	Revision	By	Date

Designed by:

Vanasse Hangen Brustlin, Inc.

CONSULTANT PROJECT MANAGER: T. Bryant

	By	Date		By	Date
Designed	KZS	12/13	Checked	SMH	12/13
Drawn	CMD	12/13	In Charge of	TSB	12/13

VANASSE HANGEN BRUSTLIN, INC.
500 Southborough Dr.
Suite 105B
South Portland, ME 04106
TEL (207) 889-3150
FAX (207) 253-5596

MAINE TURNPIKE

THE GOLD STAR MEMORIAL HIGHWAY

MTA PROJECT MANAGER: Ralph C. Norwood IV

SUPERSTRUCTURE REPLACEMENT
LITCHFIELD ROAD UNDERPASS

ABUTMENT 2
MODIFICATIONS

SHEET NUMBER: 28

CONTRACT:2014.07

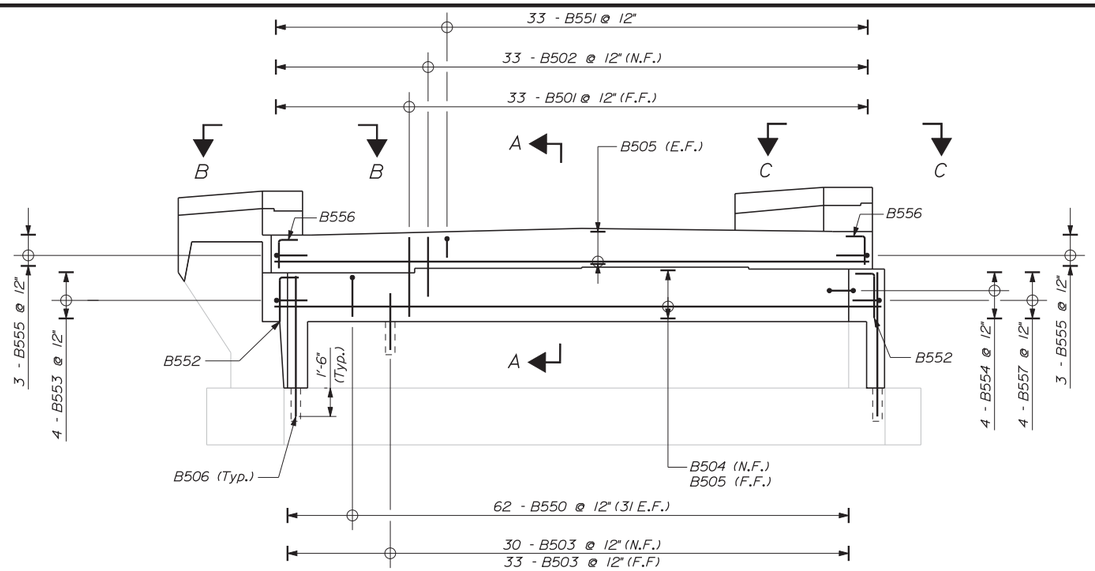

ELEVATION
Scale: 1/4" = 1'-0"

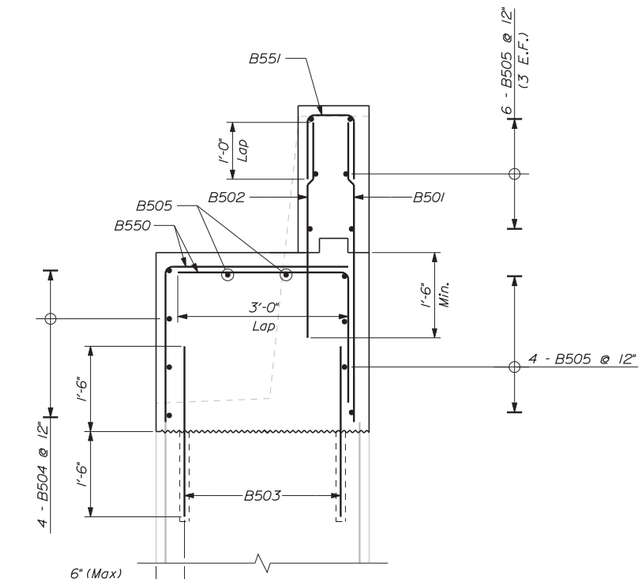

SECTION A-A
Scale: 3/4" = 1'-0"

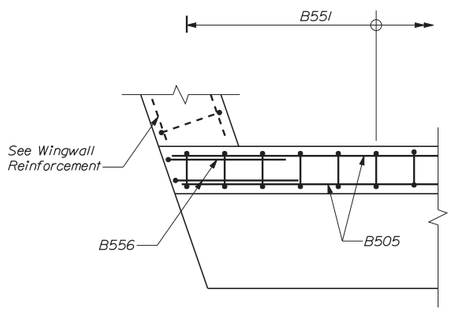

AT BACKWALL

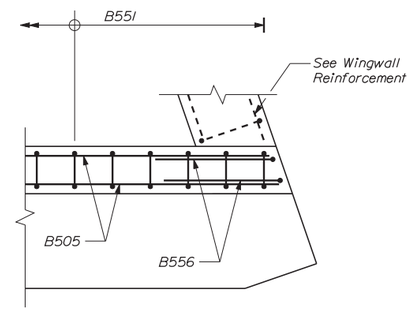

AT BACKWALL

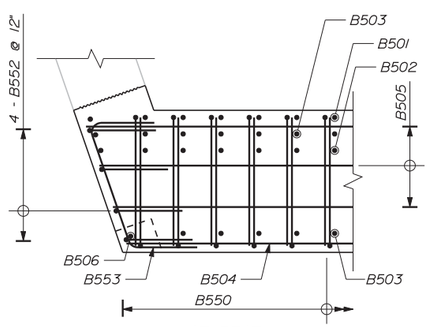

AT SEAT

SECTION B-B
Scale: 1/2" = 1'-0"

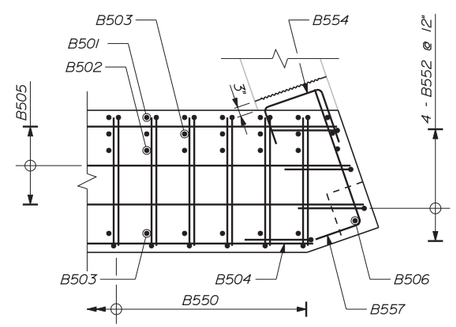

AT SEAT

SECTION C-C
Scale: 1/2" = 1'-0"

SHEET NOTES

1. See Abutment 1 Reinforcement Sheet for Abutment Construction Notes.

REINFORCING KEY

N.F. = Near Face
F.F. = Far Face
E.F. = Each Face
▲ = Cut in Field

Date:12/13/2013

Filename: ...\st\planset\029_abut2_03.dgn

Scale: AS NOTED

No.	Revision	By	Date

Designed by:

Vanasse Hangen Brustlin, Inc.

CONSULTANT PROJECT MANAGER: T. Bryant

	By	Date		By	Date
Designed	KZS	12/13	Checked	SMH	12/13
Drawn	CMD	12/13	In Charge of	TSB	12/13

VANASSE HANGEN BRUSTLIN, INC.
500 Southborough Dr.
Suite 105B
South Portland, ME 04106
TEL (207) 889-3150
FAX (207) 253-5596

MAINE TURNPIKE

THE GOLD STAR MEMORIAL HIGHWAY

MTA PROJECT MANAGER: Ralph C. Norwood IV

SUPERSTRUCTURE REPLACEMENT
LITCHFIELD ROAD UNDERPASS

ABUTMENT 2
REINFORCEMENT

SHEET NUMBER: 29

CONTRACT:2014.07

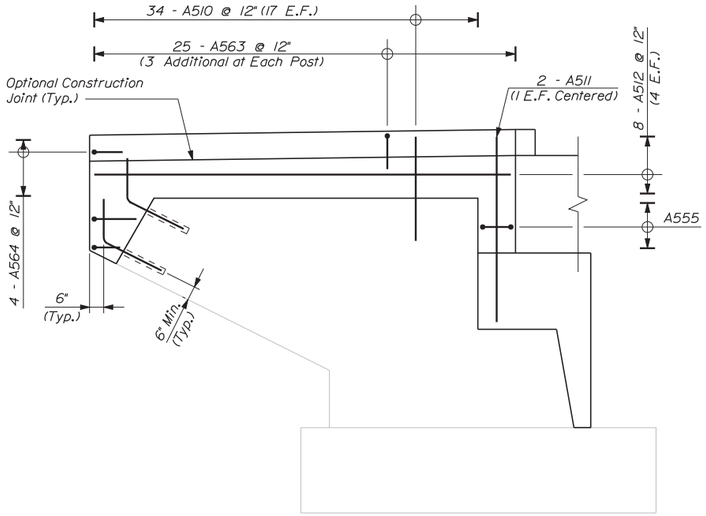

WINGWALL B ELEVATION

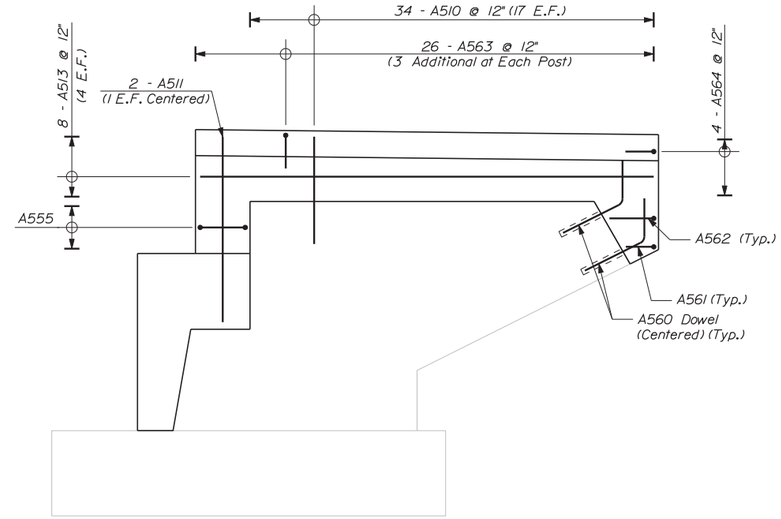

WINGWALL A ELEVATION

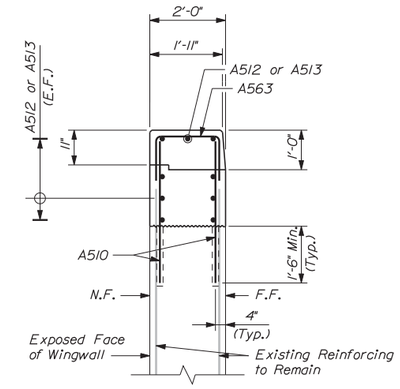

TYPICAL
WINGWALL 1 SECTION
Scale: 1/2" = 1'-0"

ABUTMENT NO. 1 WINGWALLS
Scale: 3/8" = 1'-0"

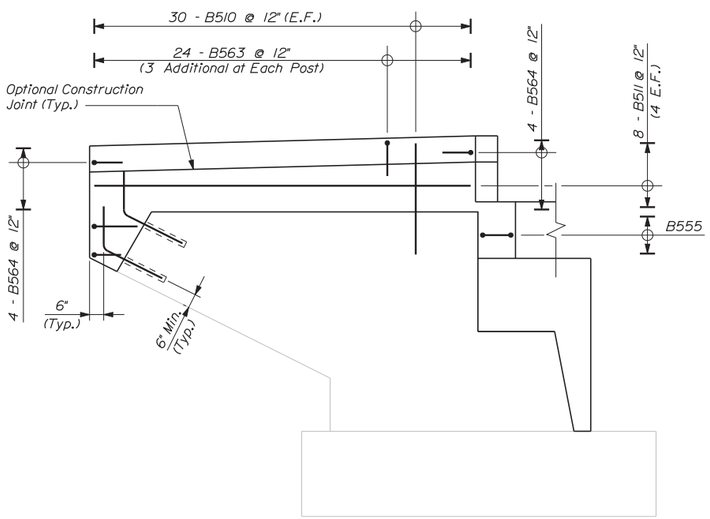

WINGWALL B ELEVATION

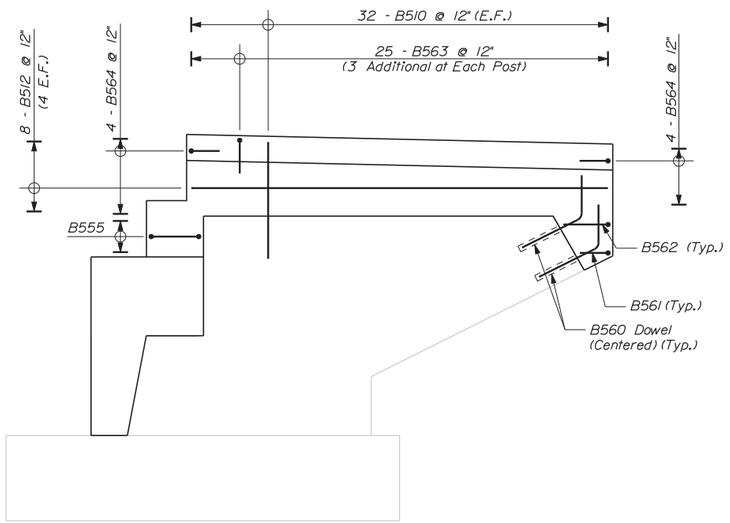

WINGWALL A ELEVATION

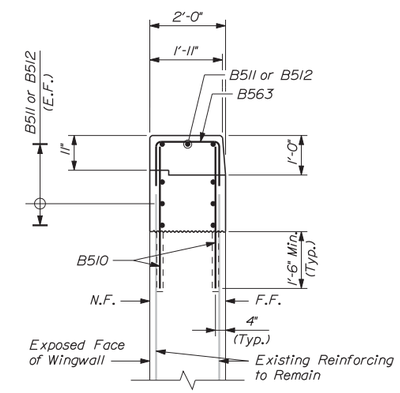

TYPICAL
WINGWALL 2 SECTION
Scale: 1/2" = 1'-0"

ABUTMENT NO. 2 WINGWALLS
Scale: 3/8" = 1'-0"

REINFORCING KEY

N.F. = Near Face
F.F. = Far Face
E.F. = Each Face
▲ = Cut in Field

Scale: AS NOTED

No.	Revision	By	Date

Designed by:

Vanasse Hangen Brustlin, Inc.

CONSULTANT PROJECT MANAGER: T. Bryant

	By	Date		By	Date
Designed	KZS	12/13	Checked	SMH	12/13
Drawn	CMD	12/13	In Charge of	TSB	12/13

VANASSE HANGEN BRUSTLIN, INC.
500 Southborough Dr.
Suite 105B
South Portland, ME 04106
TEL (207) 889-3150
FAX (207) 253-5596

MAINE TURNPIKE

THE GOLD STAR MEMORIAL HIGHWAY

MTA PROJECT MANAGER: Ralph C. Norwood IV

SUPERSTRUCTURE REPLACEMENT
LITCHFIELD ROAD UNDERPASS

ABUTMENT WINGWALLS

SHEET NUMBER: 30

CONTRACT: 2014.07

Date: 12/13/2013

Filename: ...\st\planset\030_wingwall_01.dgn

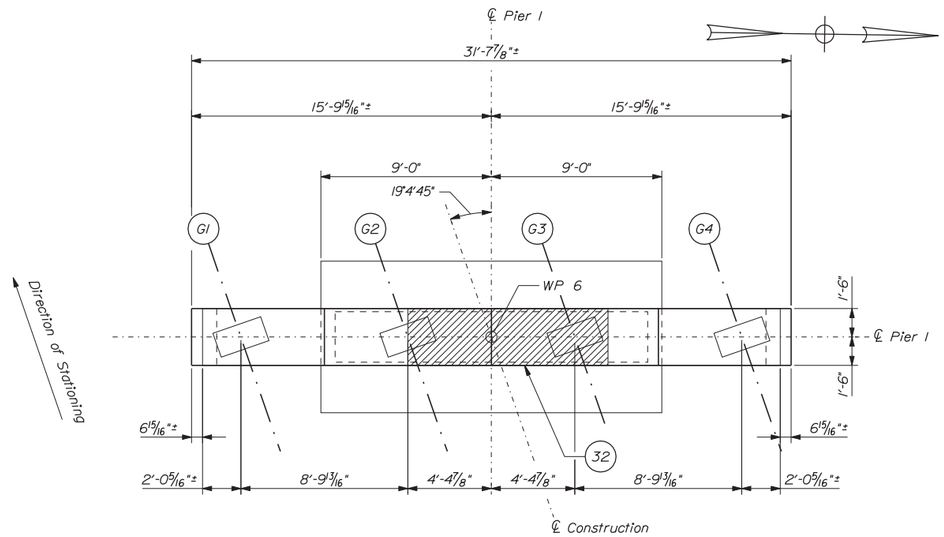

PIER 1 - PLAN

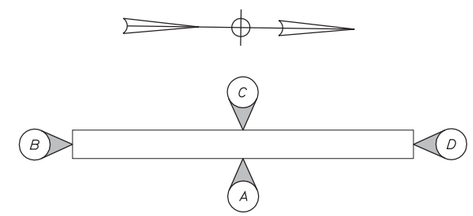

PIER ELEVATION KEY

PIER NOTES:

1. Pier repair work shall include: providing access for pier inspection and pier surface patch repairs.
2. Where pier surface patch repairs are specified the work shall include removal of unsound concrete and placement and curing of the repair materials. Repairs shall be measured for payment under Item 518.6314, Pier Repairs.
3. All existing anchor rods shall be cut and removed to one inch above existing pedestals.
4. Actual repair areas will be determined by the Resident during construction. If pier surface patch repairs are required to extend more that 1/3 the width of the column stem the work shall be sequenced such that removal of the column concrete is limited to no more than 1/3 of the column width at any one time.
5. Pier cap repairs shall not be performed when traffic is active on the roadway above unless authorized by the Resident.
6. Top surface of pier cap shall be intentionally roughened, as directed by Resident, prior to placing concrete, incidental to Item 502.23.
7. All exposed pier surfaces shall be coated with a protective coating for concrete surfaces as shown.
8. See Concrete Repair Notes on Abutment 1 Removal and Repair Sheet.
9. Contractor shall not disturb the wetlands at Piers 1 and 3. See Impact Plan Sheet.
10. Bearing anchor rods shall be placed before installing diaphragms.

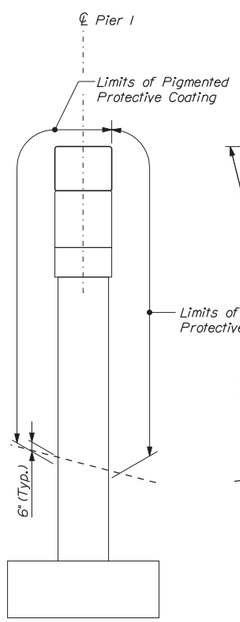

ELEVATION B

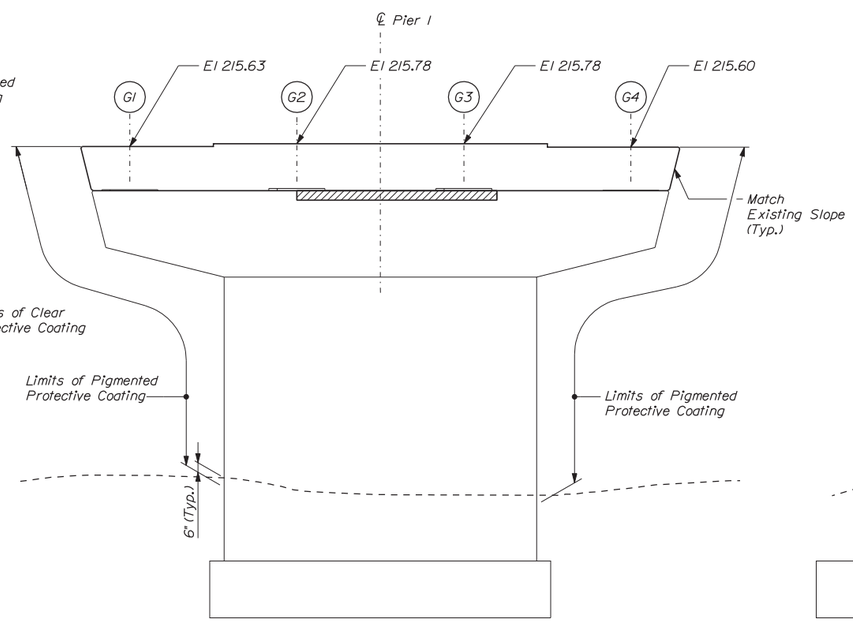

ELEVATION A

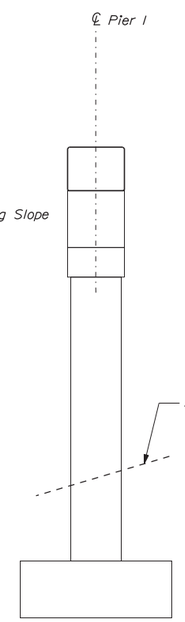

ELEVATION D

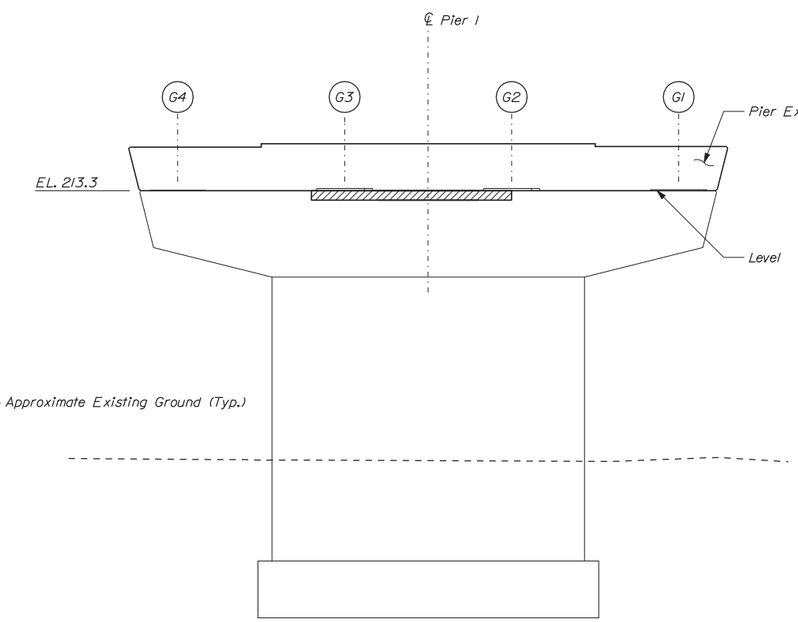

ELEVATION C

REPAIR QUANTITIES (SF)

Pier Surface Patch Repair	32

KEY

= Surface Patch Repair (Item 518.6314)

(#) = Square Foot Area of Repair

Scale: 1/4" = 1'-0"

No.	Revision	By	Date

Designed by:

VHB Vanasse Hangen Brustlin, Inc.

CONSULTANT PROJECT MANAGER: T. Bryant

	By	Date		By	Date
Designed	KZS	12/13	Checked	SMH	12/13
Drawn	CMD	12/13	In Charge of	TSB	12/13

VANASSE HANGEN BRUSTLIN, INC.
500 Southborough Dr.
Suite 105B
South Portland, ME 04106
TEL (207) 889-3150
FAX (207) 253-5596

MAINE TURNPIKE

THE GOLD STAR MEMORIAL HIGHWAY

MTA PROJECT MANAGER: Ralph C. Norwood IV

SUPERSTRUCTURE REPLACEMENT
LITCHFIELD ROAD UNDERPASS

PIER 1 REPAIR AND MODIFICATIONS

SHEET NUMBER: 31

CONTRACT: 2014.07

31 OF 70

Date: 12/13/2013

Filename: ...\cad\st\planset\031_pier_01.dgn

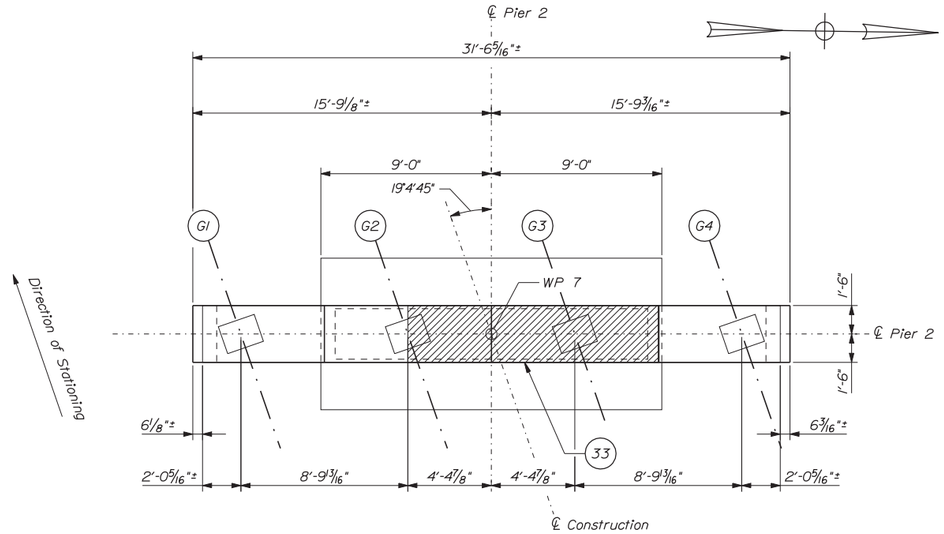

PIER 2 - PLAN

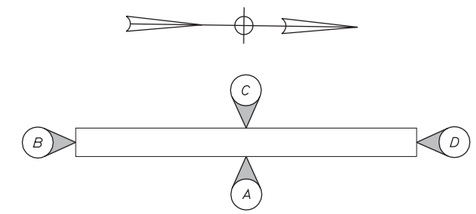

PIER ELEVATION KEY

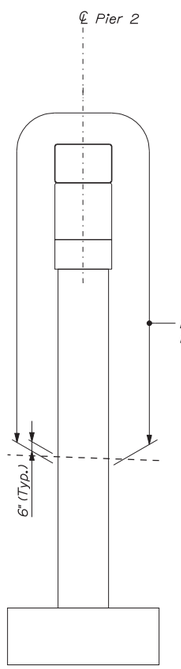

ELEVATION B

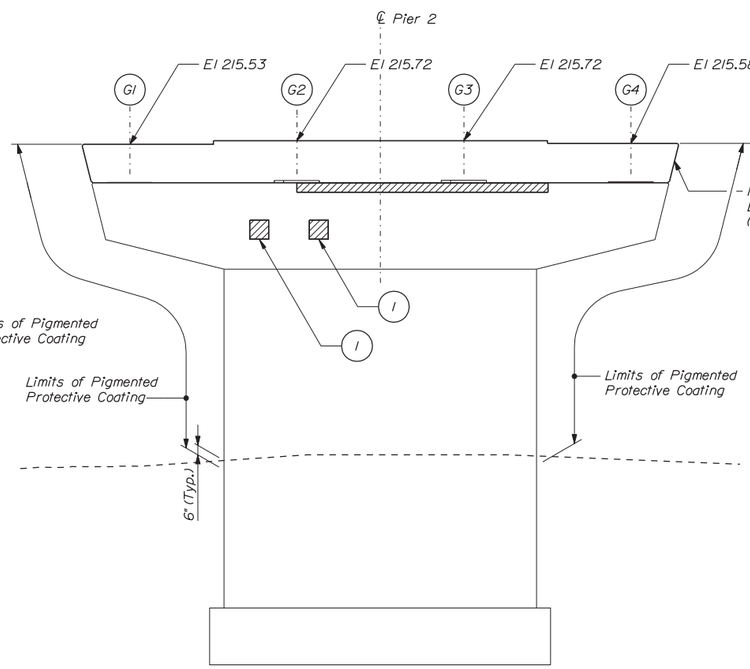

ELEVATION A

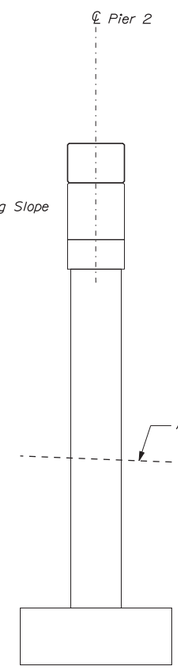

ELEVATION D

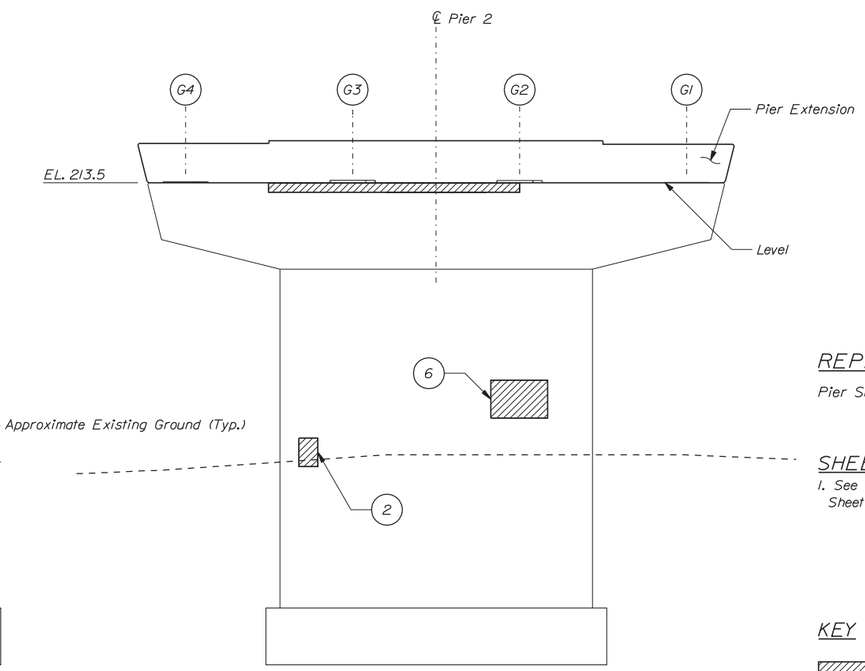

ELEVATION C

REPAIR QUANTITIES (SF)

Pier Surface Patch Repair	43

SHEET NOTE:

1. See Pier 1 Repair and Modifications Sheet for Pier Notes.

KEY

= Surface Patch Repair (Item 518.6314)

(#) = Square Foot Area of Repair

Scale: 1/4" = 1'-0"

No.	Revision	By	Date

Designed by:

VHB Vanasse Hangen Brustlin, Inc.

CONSULTANT PROJECT MANAGER: T. Bryant

	By	Date		By	Date
Designed	KZS	12/13	Checked	SMH	12/13
Drawn	CMD	12/13	In Charge of	TSB	12/13

VANASSE HANGEN BRUSTLIN, INC.
500 Southborough Dr.
Suite 105B
South Portland, ME 04106
TEL (207) 889-3150
FAX (207) 253-5596

MAINE TURNPIKE

THE GOLD STAR MEMORIAL HIGHWAY

MTA PROJECT MANAGER: Ralph C. Norwood IV

SUPERSTRUCTURE REPLACEMENT
LITCHFIELD ROAD UNDERPASS

PIER 2 REPAIR AND MODIFICATIONS

SHEET NUMBER: 32

CONTRACT: 2014.07

Date: 12/13/2013
Filename: ...\cad\st\planset\032_pier_02.dgn

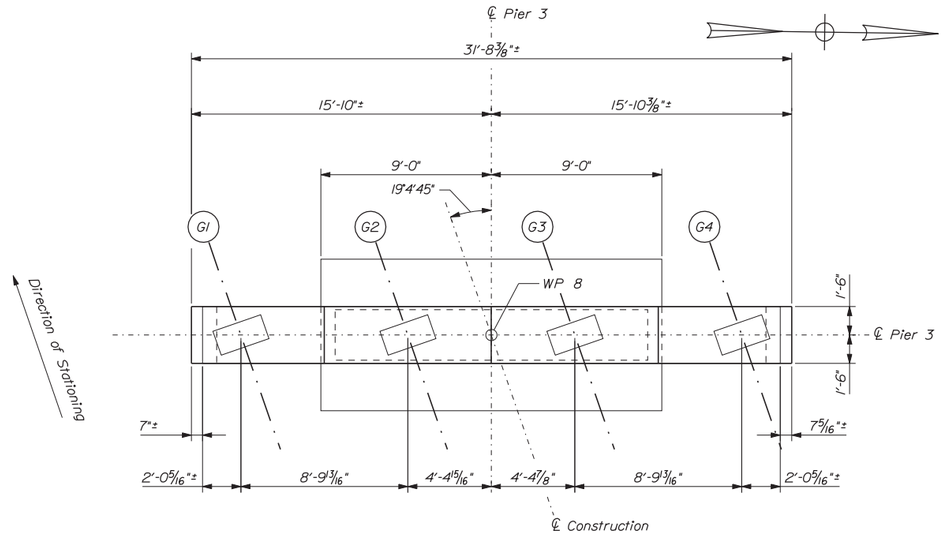

PIER 3 - PLAN

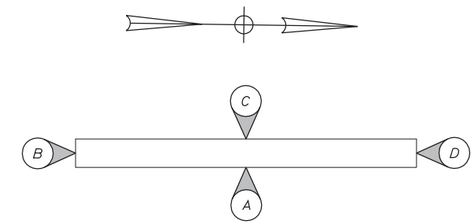

PIER ELEVATION KEY

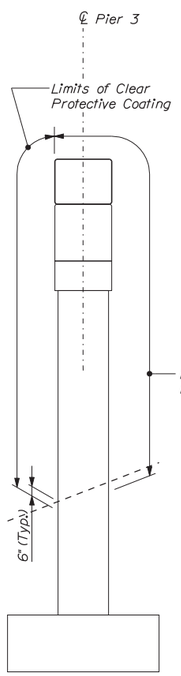

ELEVATION B

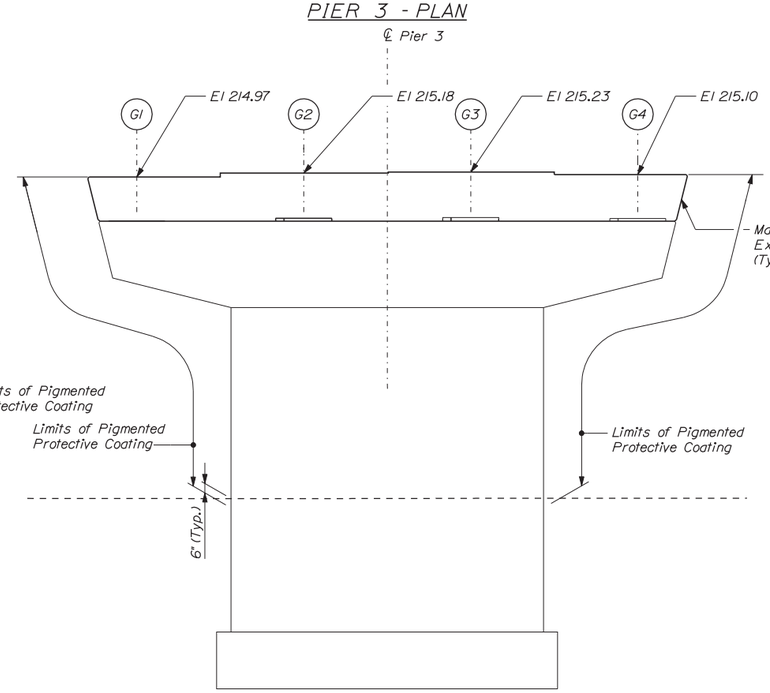

ELEVATION A

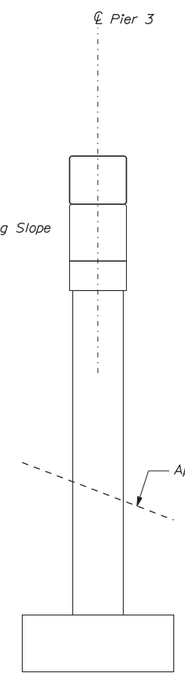

ELEVATION D

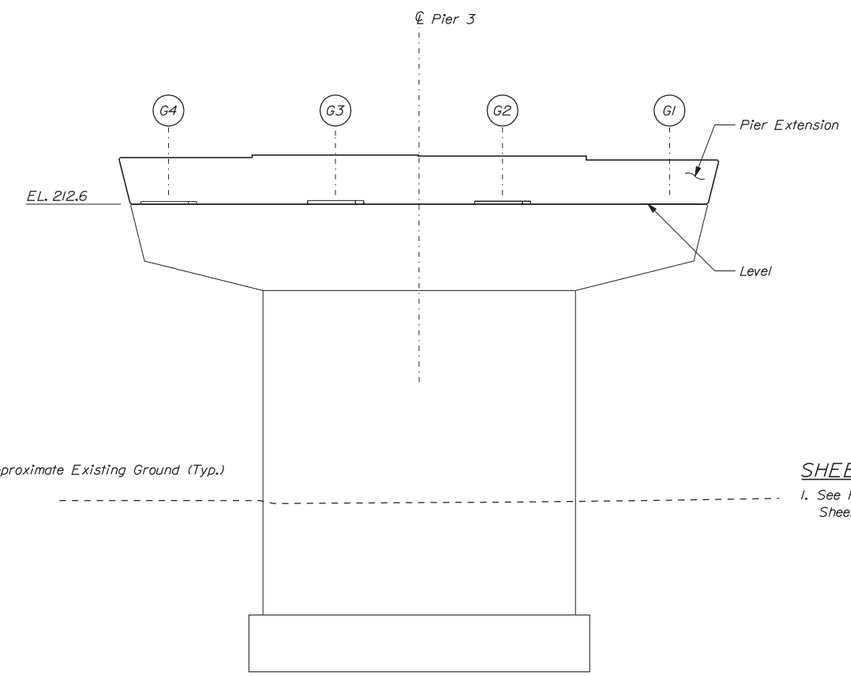

ELEVATION C

SHEET NOTE:

1. See Pier 1 Repair and Modifications Sheet for Pier Notes.

Scale: 1/4" = 1'-0"

No.	Revision	By	Date

Designed by:

Vanasse Hangen Brustlin, Inc.

CONSULTANT PROJECT MANAGER: T. Bryant

	By	Date		By	Date
Designed	KZS	12/13	Checked	SMH	12/13
Drawn	CMD	12/13	In Charge of	TSB	12/13

VANASSE HANGEN BRUSTLIN, INC.
500 Southborough Dr.
Suite 105B
South Portland, ME 04106
TEL (207) 889-3150
FAX (207) 253-5596

MAINE TURNPIKE

THE GOLD STAR MEMORIAL HIGHWAY

MTA PROJECT MANAGER: Ralph C. Norwood IV

SUPERSTRUCTURE REPLACEMENT
LITCHFIELD ROAD UNDERPASS

PIER 3 REPAIR AND MODIFICATIONS

SHEET NUMBER: 33

CONTRACT:2014.07

Date:12/13/2013
Filename: ...\cad\st\planset\033_pier_03.dgn

NOTES

1. Adjust longitudinal reinforcement to ensure anchor rods and reinforcement do not interfere.

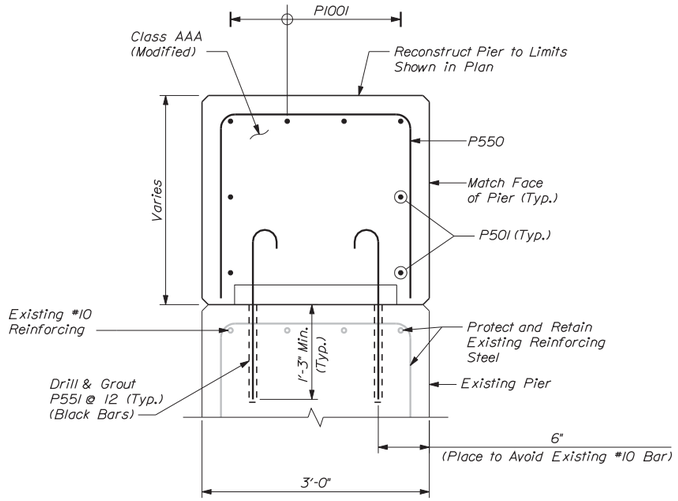

SECTION A-A
Scale: 1" = 1'-0"

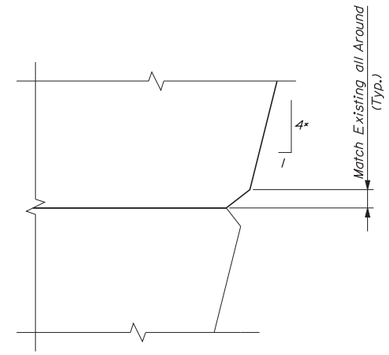

DETAIL A
* Match Existing
Scale: 3" = 1'-0"

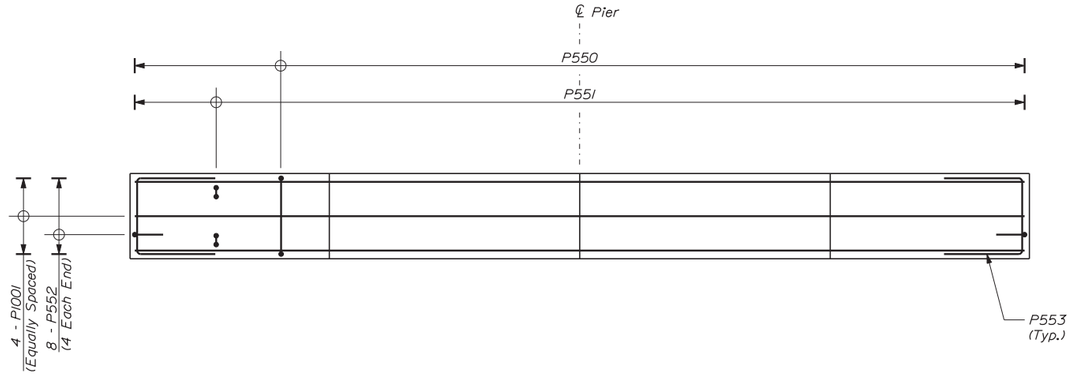

PLAN
Scale: 3/8" = 1'0"

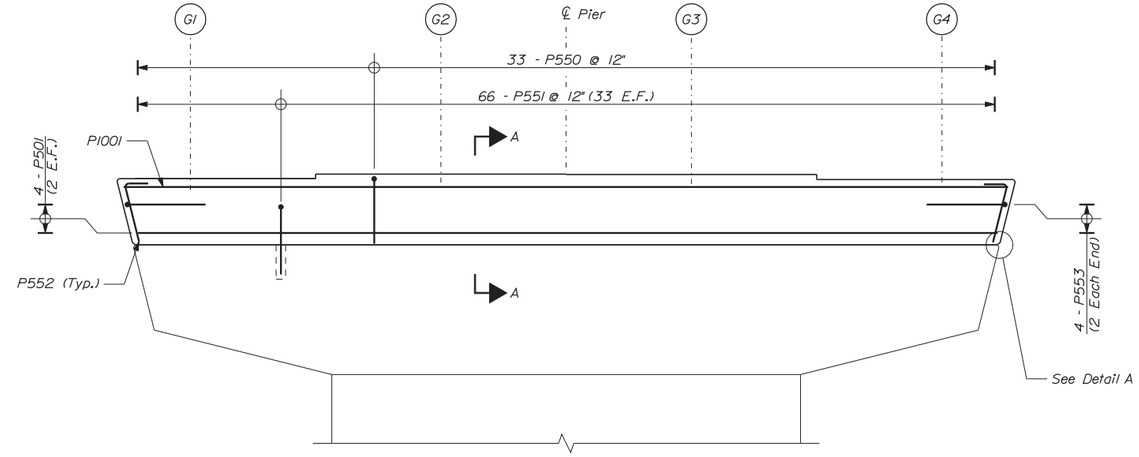

ELEVATION
Scale: 3/8" = 1'0"

Date:12/13/2013

Filename: ...\cad\st\planset\034_pier_04.dgn

Scale: AS NOTED

No.	Revision	By	Date

Designed by:

Vanasse Hangen Brustlin, Inc.

CONSULTANT PROJECT MANAGER: T. Bryant

	By	Date		By	Date
Designed	KZS	12/13	Checked	SMH	12/13
Drawn	CMD	12/13	In Charge of	TSB	12/13

VANASSE HANGEN BRUSTLIN, INC.
500 Southborough Dr.
Suite 105B
South Portland, ME 04106
TEL (207) 889-3150
FAX (207) 253-5596

MAINE TURNPIKE

THE GOLD STAR MEMORIAL HIGHWAY

MTA PROJECT MANAGER: Ralph C. Norwood IV

SUPERSTRUCTURE REPLACEMENT
LITCHFIELD ROAD UNDERPASS

PIER CAP REINFORCING DETAILS

SHEET NUMBER: 34

CONTRACT:2014.07

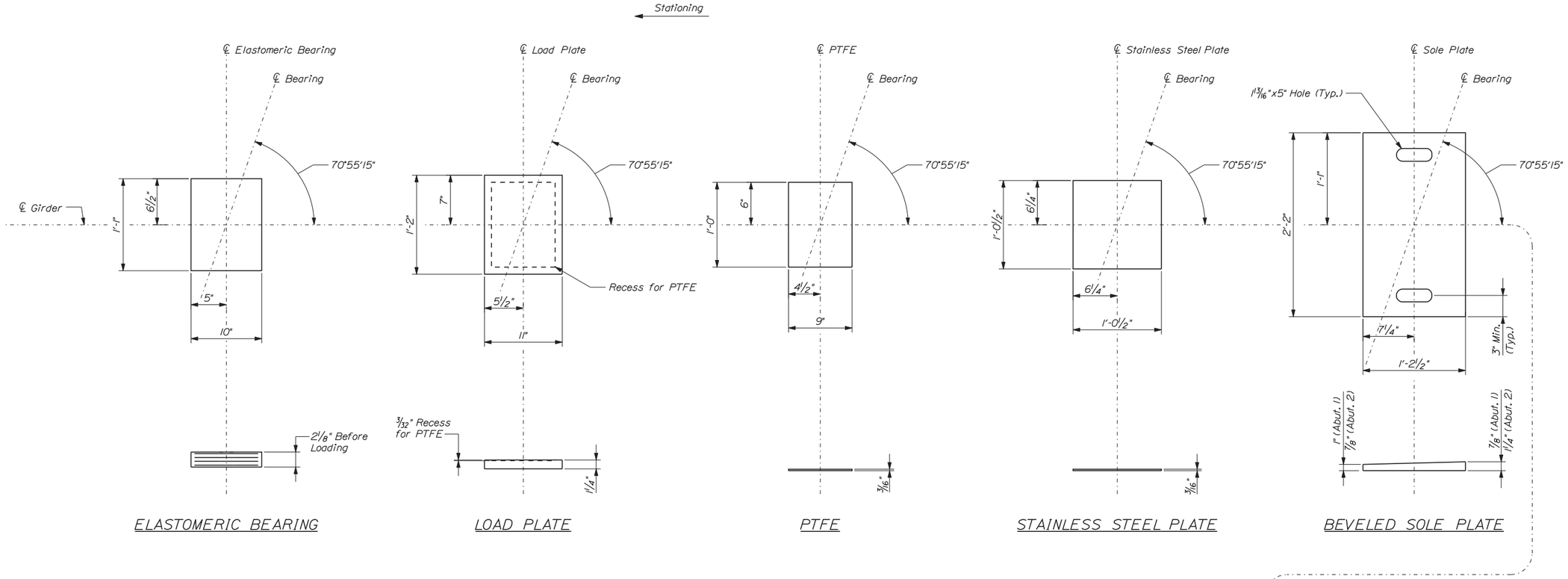

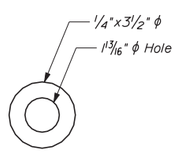

PLATE WASHER DETAIL
Not to Scale

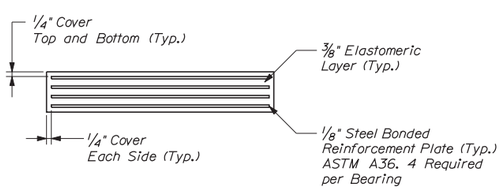

ELASTOMERIC BEARING DETAIL
Not to Scale

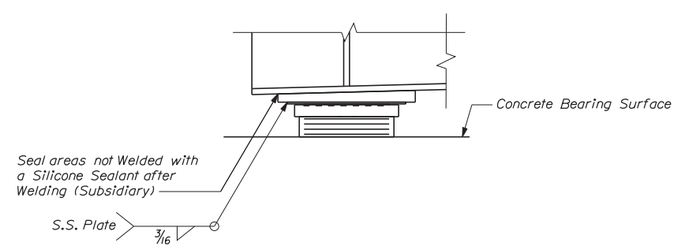

SECTION A-A

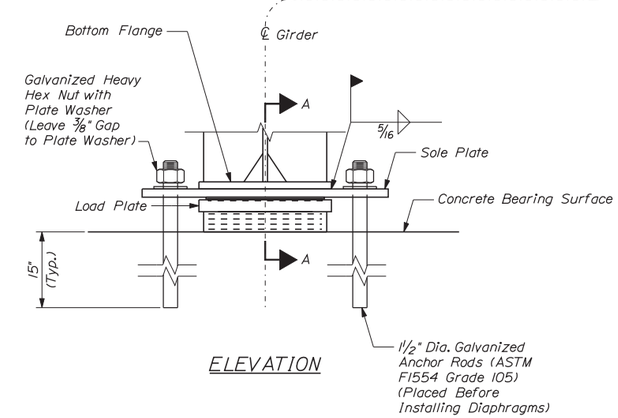

ELEVATION

ABUTMENT BEARINGS (EXPANSION)

NOTE

1. See Notes on Pier 3 Bearing Details Sheet.

Date:12/13/2013

Filename: ...\st\planset\035_bearing_03.dgn

Scale: 1 1/2" = 1'-0"

No.	Revision	By	Date

Designed by:

VHB Vanasse Hangen Brustlin, Inc.

CONSULTANT PROJECT MANAGER: T. Bryant

	By	Date		By	Date
Designed	KZS	12/13	Checked	SMH	12/13
Drawn	CMD	12/13	In Charge of	TSB	12/13

VANASSE HANGEN BRUSTLIN, INC.
500 Southborough Dr.
Suite 105B
South Portland, ME 04106
TEL (207) 889-3150
FAX (207) 253-5596

MAINE TURNPIKE

THE GOLD STAR MEMORIAL HIGHWAY

MTA PROJECT MANAGER: Ralph C. Norwood IV

SUPERSTRUCTURE REPLACEMENT
LITCHFIELD ROAD UNDERPASS

ABUTMENT BEARING DETAILS

SHEET NUMBER: 35

CONTRACT:2014.07

35 OF 70

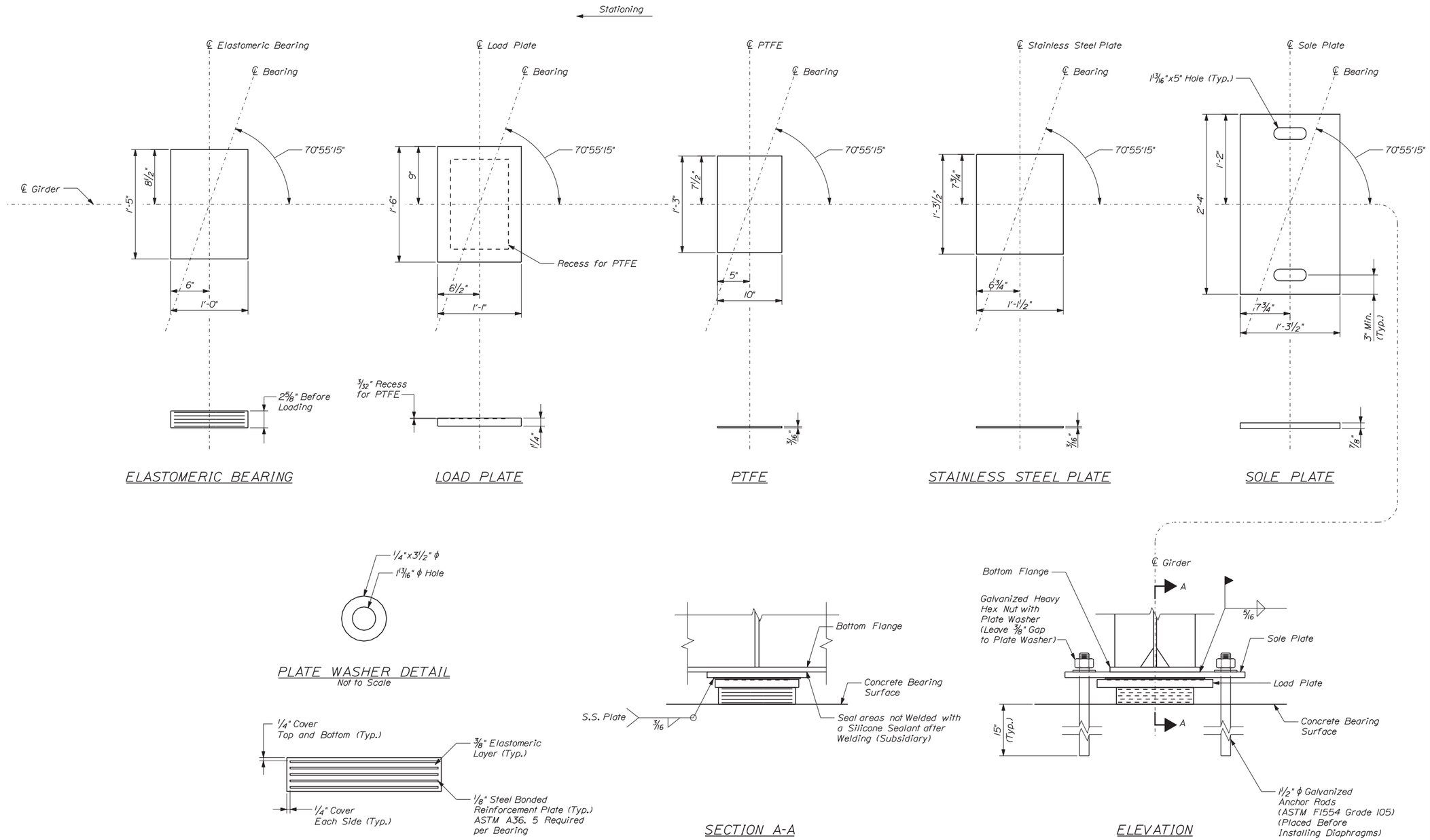

NOTE

1. See Notes on Pier 3 Bearing Details Sheet.

Date:12/13/2013

Filename: ...\st\planset\036_bearing_02.dgn

Scale: 1 1/2" = 1'-0"

No.	Revision	By	Date

Designed by:

Vanasse Hangen Brustlin, Inc.

CONSULTANT PROJECT MANAGER: T. Bryant

	By	Date		By	Date
Designed	KZS	12/13	Checked	SMH	12/13
Drawn	CMD	12/13	In Charge of	TSB	12/13

VANASSE HANGEN BRUSTLIN, INC.
500 Southborough Dr.
Suite 105B
South Portland, ME 04106
TEL (207) 889-3150
FAX (207) 253-5596

MAINE TURNPIKE

THE GOLD STAR MEMORIAL HIGHWAY

MTA PROJECT MANAGER: Ralph C. Norwood IV

SUPERSTRUCTURE REPLACEMENT
LITCHFIELD ROAD UNDERPASS

PIER 1 AND 2
BEARING DETAILS

SHEET NUMBER: 36

CONTRACT:2014.07

Date:12/13/2013

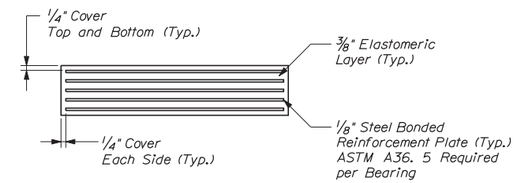

ELASTOMERIC BEARING DETAIL
Not to Scale

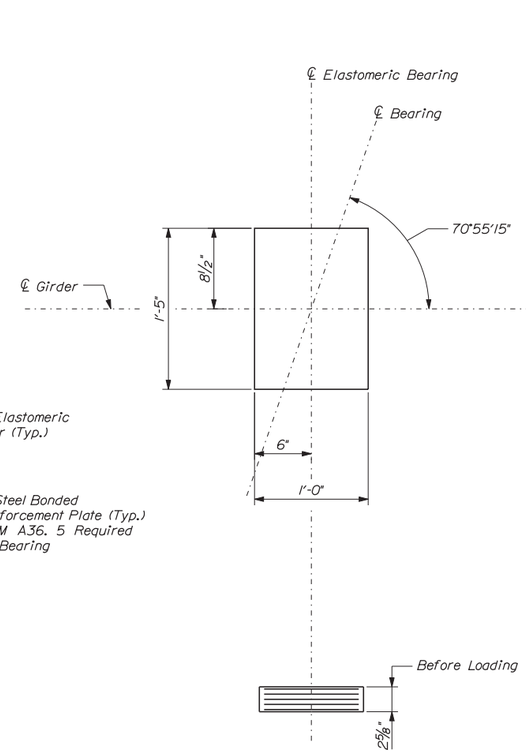

ELASTOMERIC BEARING

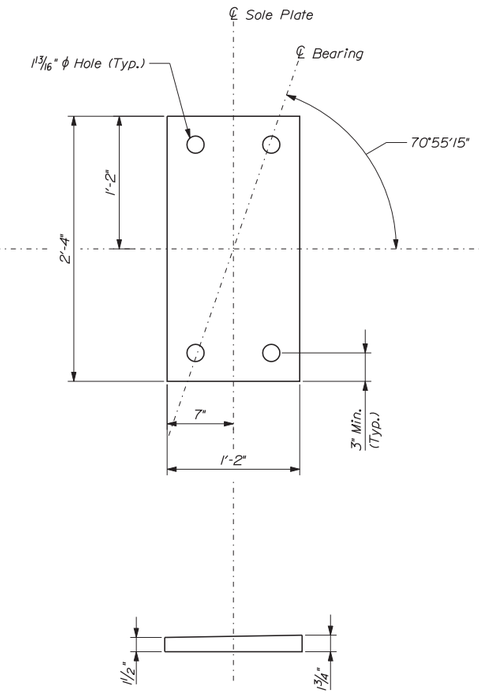

BEVELED SOLE PLATE

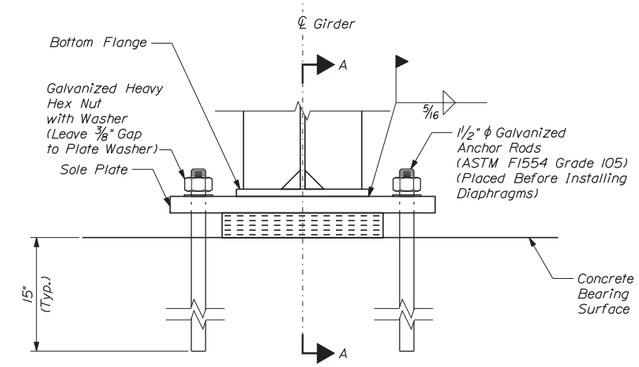

ELEVATION

ELASTOMERIC BEARING NOTES

1. Elastomer shall be virgin Neoprene (Polychloroprene). The shear modulus of the elastomer shall be between 100 and 130 psi.
2. Vulcanizing of the elastomer to the steel plates shall be done during the primary mold process.
3. Masonry plates, sole plates, and load plates shall meet the requirements of ASTM A709/A709M, Grade 50W.
4. Horizontal PTFE at expansion bearings shall be dimpled and lubricated. Lubrication shall be supplied and installed per the bearing manufacturers recommendation to ensure a coefficient of friction less than or equal to 0.03 at 68 degrees F. Cost included in Bearing item.
5. All bearings shall be marked prior to shipping. The marks shall include the bearing location on the bridge and a direction arrow which points upstation. All marks shall be permanent and shall be visible after the bearing is installed.
6. Bearings shall be covered during transit.
7. All necessary precautions shall be taken to protect bearing components from field weld flash and spatter.
8. Masonry plate and sole plate shall be painted (shop applied) at Abutment 1. See Special Provision Section 506.

ANCHOR ROD NOTES

1. All anchor rods, nuts, and plate washers shall be galvanized after fabrication in accordance with ASTM A153. Anchor rods shall be fully threaded.
2. Burr threads on anchor rods after nuts tightened snug to prevent removal. Touch up damaged galvanized areas with zinc-rich paint. Cost included in Bearing item.
3. The Contractor shall adjust longitudinal reinforcement in pier cap to ensure anchor rods and reinforcement do not clash. Cost included in the Bearing item.
4. Anchor rods shall be placed prior to installing diaphragms.

BEARING DESIGN CRITERIA		
LOADS	ABUTMENTS	PIERS
Unfactored Dead Load (Max.)	24k	80k
Unfactored Live Load (Max.)	79k	118k
DESIGN METHOD A		

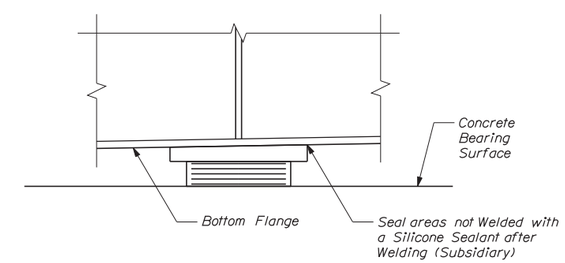

SECTION A-A

PIER 3 BEARINGS (FIXED)

Filename: ...\st\planset\037_bearing_01.dgn

Scale: 1 1/2" = 1'-0"

No.	Revision	By	Date

Designed by:

VHB Vanasse Hangen Brustlin, Inc.

CONSULTANT PROJECT MANAGER: T. Bryant

	By	Date		By	Date
Designed	KZS	12/13	Checked	SMH	12/13
Drawn	CMD	12/13	In Charge of	TSB	12/13

VANASSE HANGEN BRUSTLIN, INC.
500 Southborough Dr.
Suite 105B
South Portland, ME 04106
TEL (207) 889-3150
FAX (207) 253-5596

MAINE TURNPIKE

THE GOLD STAR MEMORIAL HIGHWAY

MTA PROJECT MANAGER: Ralph C. Norwood IV

SUPERSTRUCTURE REPLACEMENT
LITCHFIELD ROAD UNDERPASS

PIER 3 BEARING DETAILS

SHEET NUMBER: 37

CONTRACT:2014.07

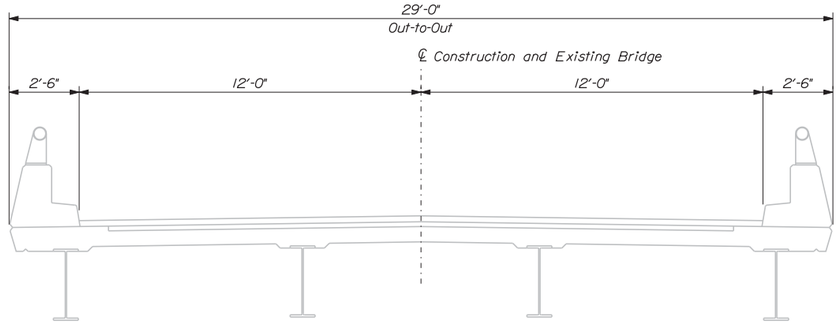

EXISTING SUPERSTRUCTURE SECTION

Scale: 3/8" = 1'-0"

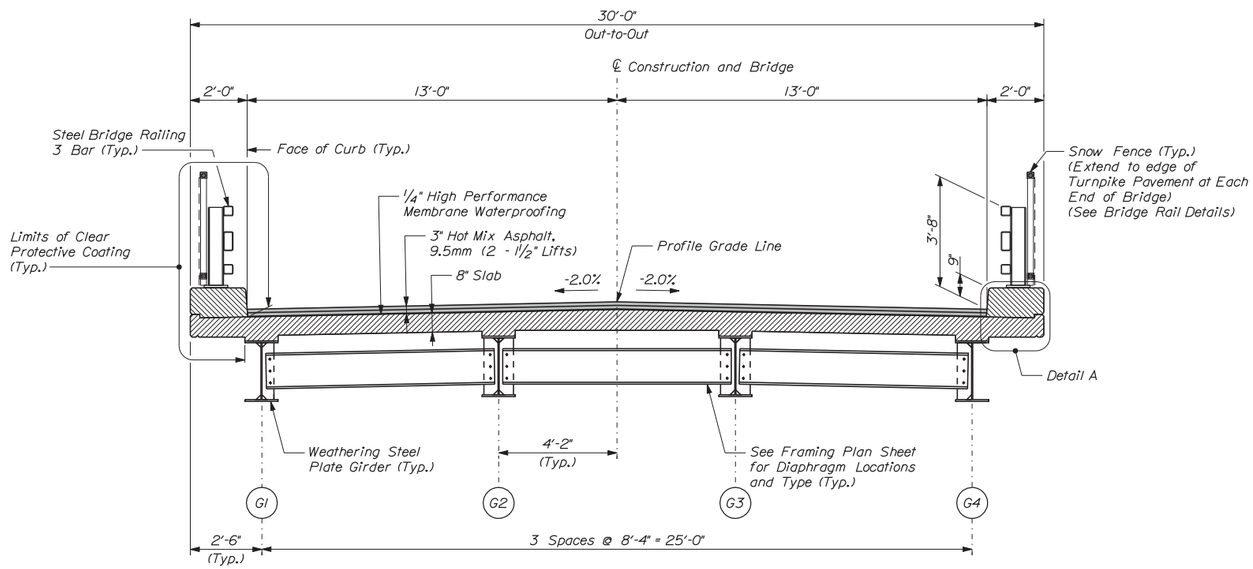

PROPOSED SUPERSTRUCTURE SECTION

(Looking Upstation)
Scale: 3/8" = 1'-0"

SUPERSTRUCTURE NOTES:

1. All bridge curb concrete, including inside faces, top and outside faces, approach curb and deck fascia shall have a rubbed finish prior to the application of the clear protective coating for concrete surface.
2. The concrete deck shall be given a smooth bull float or wood float finish.
3. Prior to installing the proposed shear studs the contractor shall clean the girder top flange so that it is free of debris, rust, scale, oil and other contaminates that would adversely affect the welding operation. All the grinding shall be performed in the longitudinal direction of the beam. Payment for preparing girder top flange for installation of proposed shear studs shall be incidental to Item 505.09.
4. Protective shielding shall be required per Special Provision Section 524.
5. The theoretical blocking used for design of the structure is 3 inches at the centerline of bearing at the abutments and piers.
6. Reinforcing steel shall have a minimum concrete cover of 2 inches unless otherwise noted.
7. Form a one inch V-groove on the fascias at the horizontal joint between the curb and slab.
8. The superstructure slab concrete shall be placed in one continuous operation and the concrete shall be kept plastic one complete span behind the span being placed.
9. At the Contractor's option, Precast Deck Panels may be used in place of the full depth cast-in-place deck slab, in accordance with Special Provisions Section 535, and in accordance with Standard Details, 502(07) - 502(12A).
10. See Framing Plan and Girder Elevation sheet for Structural Steel notes.
11. Install 1" diameter PVC deck drains per Standard Detail 502(03) and Special Provision Section 502.17 as required and as directed by the Resident. Drains shall extend 1'-0" below bottom flange.

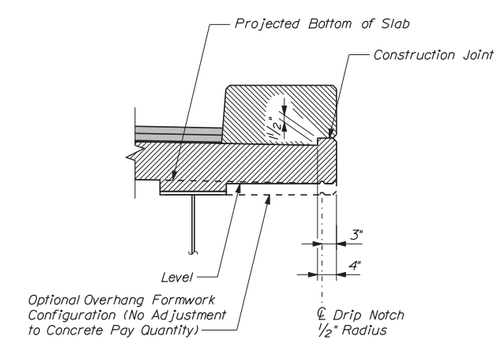

DETAIL A

Scale: 3/4" = 1'-0"

Date:12/13/2013

Filename: ...\planset\038_bridgetyp_01.dgn

Scale: AS NOTED

No.	Revision	By	Date

Designed by:

Vanasse Hangen Brustlin, Inc.

CONSULTANT PROJECT MANAGER: T. Bryant

	By	Date		By	Date
Designed	KZS	12/13	Checked	SMH	12/13
Drawn	CMD	12/13	In Charge of	TSB	12/13

VANASSE HANGEN BRUSTLIN, INC.
500 Southborough Dr.
Suite 105B
South Portland, ME 04106
TEL (207) 889-3150
FAX (207) 253-5596

MAINE TURNPIKE

THE GOLD STAR MEMORIAL HIGHWAY

MTA PROJECT MANAGER: Ralph C. Norwood IV

SUPERSTRUCTURE REPLACEMENT
LITCHFIELD ROAD UNDERPASS

SUPERSTRUCTURE SECTION

SHEET NUMBER: 38

CONTRACT:2014.07

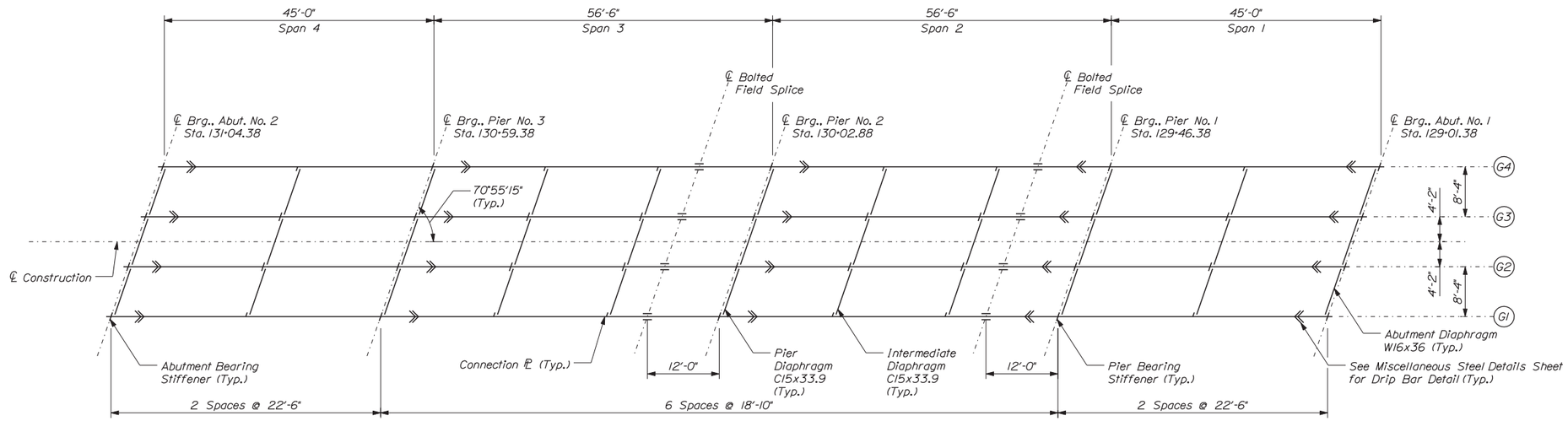

FRAMING PLAN

Scale: $^{1}/_{32}$" = 1'-0"

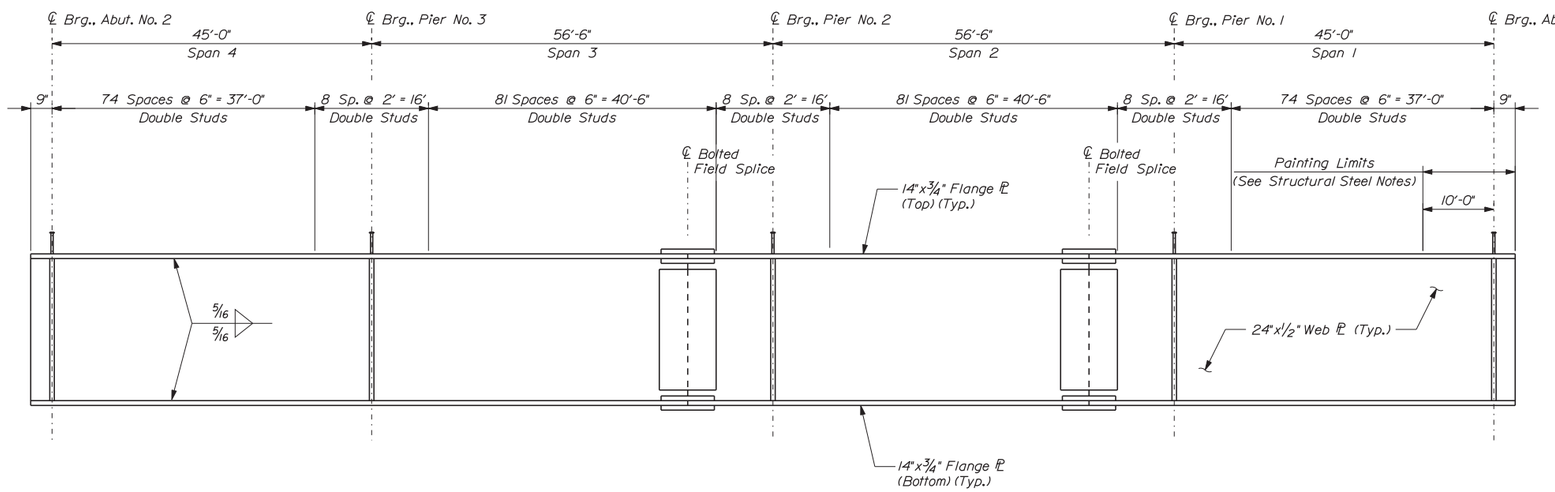

GIRDER ELEVATION AND STUD LAYOUT

(Connection Plates and Drip Bars not Shown)
670 Shear Studs per Girder
(2680 Shear Studs Total)
Not to Scale

STRUCTURAL STEEL NOTES

1. Camber ordinates, as shown, are computed to compensate for all dead load deflections and for the curvature of the finished grade profile.
2. No transverse butt weld splices will be allowed in the flange plates or web plates within 10 feet or 10 percent of the span length (whichever is greater) from the points of maximum negative moment or maximum positive moment. Butt weld splices in flanges shall be not less than 18 inches from transverse butt welds in the web plates and no transverse web or flange butt welds shall be located within 18 inches of other transverse welds (e.g. connection plates to web welds) on either flange or web. No transverse butt weld splices will be allowed in areas of stress reversal.
3. Bearing stiffeners and girder ends shall be plumb after erection and dead loading of the structure. Intermediate web stiffeners may be either plumb or normal to the top flange. Girder webs may be plumb in the no-load condition or full dead load condition for erection purposes.
4. Diaphragm connection plates may be either plumb or normal to the top flange.
5. All structural steel, including bridge shoes, shall be painted within ten feet of the centerline of bearing at Abutment No. 1.
6. All bolts shall be $^{7}/_{8}$" diameter ASTM A325 Type 3 high strength bolts. Holes shall be $^{15}/_{16}$" unless otherwise noted. Bolts shall be installed with heads down at all bottom flange connections and heads up at all top flange connections. In painted areas, bolts shall be Type 1 galvanized.
7. Shear studs shall extend a minimum of 2" into the slab. See Shear Connector Detail on Miscellaneous Steel Details Sheet.
8. Prior to erection of structural steel the Contractor shall submit a detailed erection plan for approval.
9. Bearing stiffeners shall be mill-to-bear on the bottom flange and tight fit to the top flange. Bearing stiffeners used as connection plates shall be detailed as connection plates.
10. All faying surfaces, with the exception of field splices, shall be painted or sealed in accordance with FHWA Technical Advisory T5140.22, Section 4.c.2.c to prevent the formation of pack rust.
11. All plan dimensions provided are horizontal at 45 degrees F without accounting for profile grade, unless otherwise noted.
12. Bolted field splice locations may be mirrored at centerline bearing Pier No. 2.
13. Bearing anchor rods shall be placed prior to installing diaphragms.

Date:12/13/2013

Filename: ...\st\planset\039_frame_01.dgn

Scale: AS NOTED

No.	Revision	By	Date

Designed by:

Vanasse Hangen Brustlin, Inc.

CONSULTANT PROJECT MANAGER: T. Bryant

	By	Date		By	Date
Designed	KZS	12/13	Checked	SMH	12/13
Drawn	CMD	12/13	In Charge of	TSB	12/13

VANASSE HANGEN BRUSTLIN, INC.
500 Southborough Dr.
Suite 105B
South Portland, ME 04106
TEL (207) 889-3150
FAX (207) 253-5596

MAINE TURNPIKE

THE GOLD STAR MEMORIAL HIGHWAY

MTA PROJECT MANAGER: Ralph C. Norwood IV

SUPERSTRUCTURE REPLACEMENT
LITCHFIELD ROAD UNDERPASS

FRAMING PLAN
AND GIRDER ELEVATION

SHEET NUMBER: 39

CONTRACT:2014.07

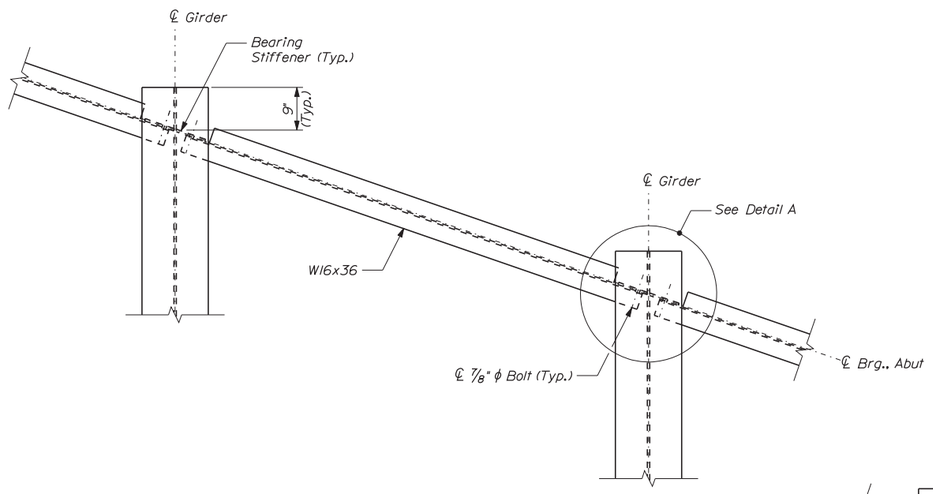

PLAN

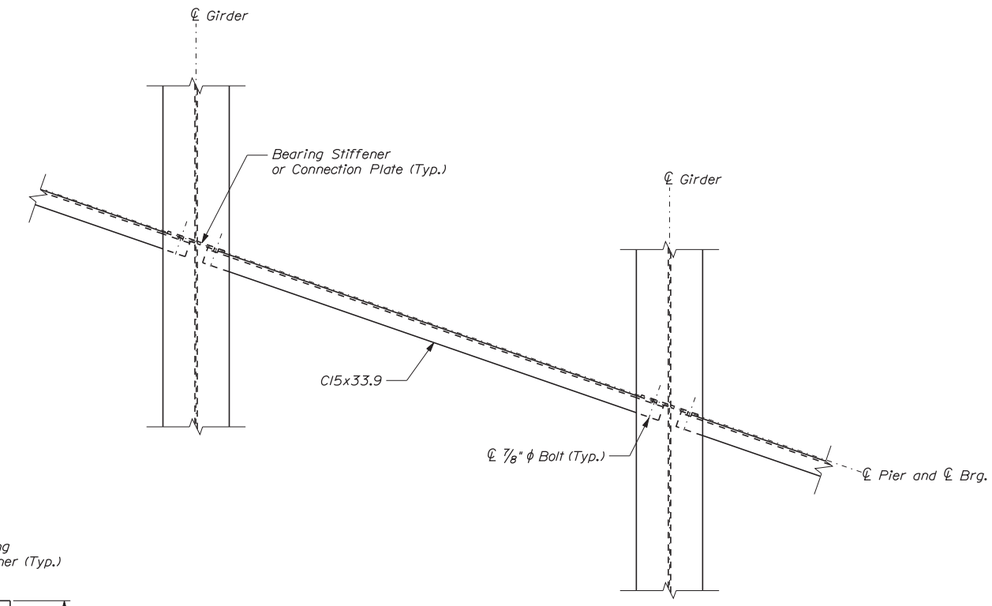

PLAN

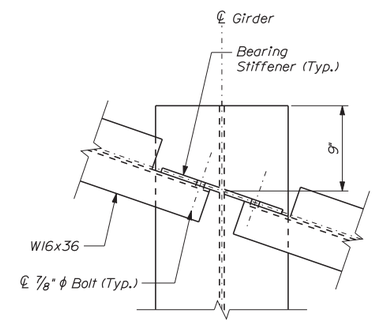

DETAIL A
(Top Flange of Girder not Shown)

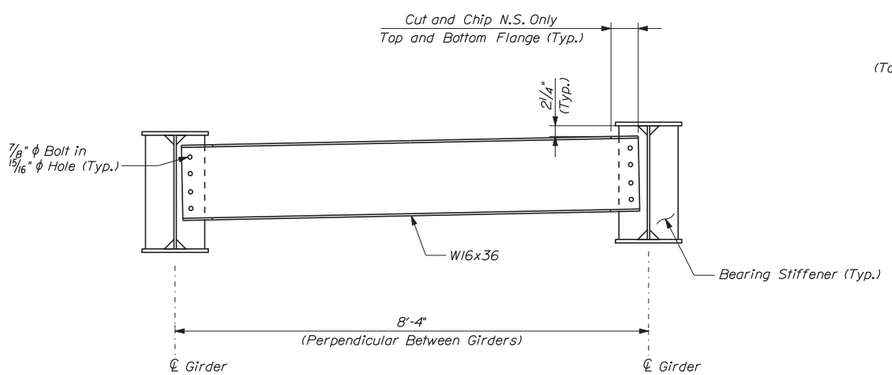

ELEVATION

ABUTMENT DIAPHRAGM
(Typical all Bays)

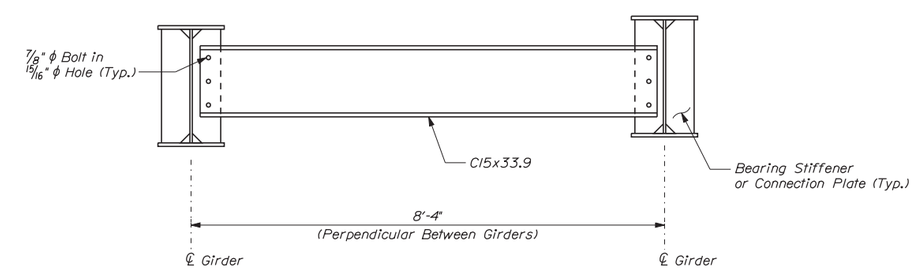

ELEVATION

PIER AND INTERMEDIATE DIAPHRAGM
(Typical all Bays)

Date:12/13/2013

Filename: ...\planset\040_disphragm_01.dgn

Scale: NOT TO SCALE

No.	Revision	By	Date

Designed by:

VHB Vanasse Hangen Brustlin, Inc.

CONSULTANT PROJECT MANAGER: T. Bryant

	By	Date		By	Date
Designed	KZS	12/13	Checked	SMH	12/13
Drawn	CMD	12/13	In Charge of	TSB	12/13

VANASSE HANGEN BRUSTLIN, INC.
500 Southborough Dr.
Suite 105B
South Portland, ME 04106
TEL (207) 889-3150
FAX (207) 253-5596

MAINE TURNPIKE

THE GOLD STAR MEMORIAL HIGHWAY

MTA PROJECT MANAGER: Ralph C. Norwood IV

SUPERSTRUCTURE REPLACEMENT
LITCHFIELD ROAD UNDERPASS

DIAPHRAGM DETAILS

SHEET NUMBER: 40

CONTRACT:2014.07

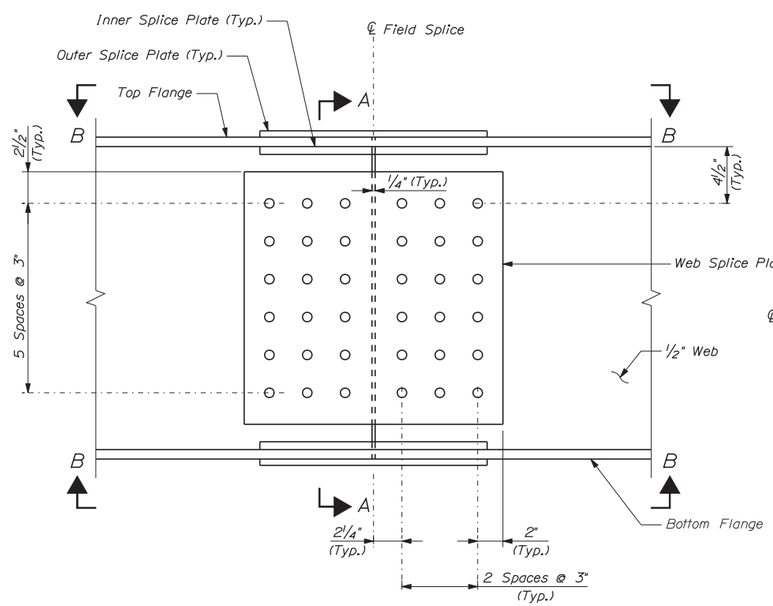

BOLTED FIELD SPLICE ELEVATION
Scale: 2" = 1'-0"

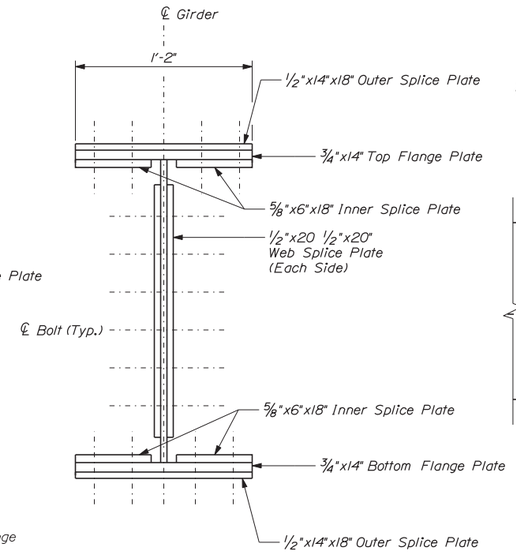

SECTION A-A
Scale: 2" = 1'-0"

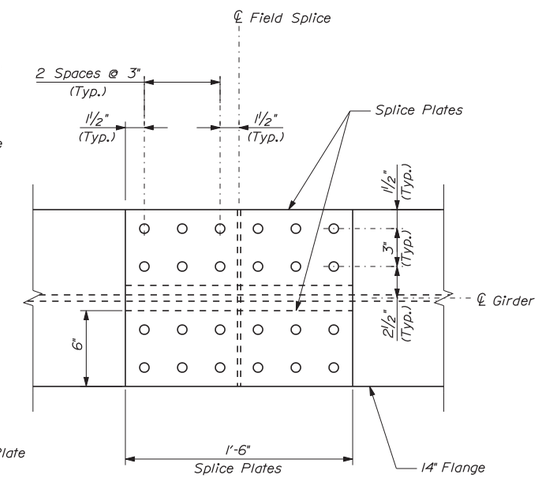

VIEW B-B
Scale: 2" = 1'-0"

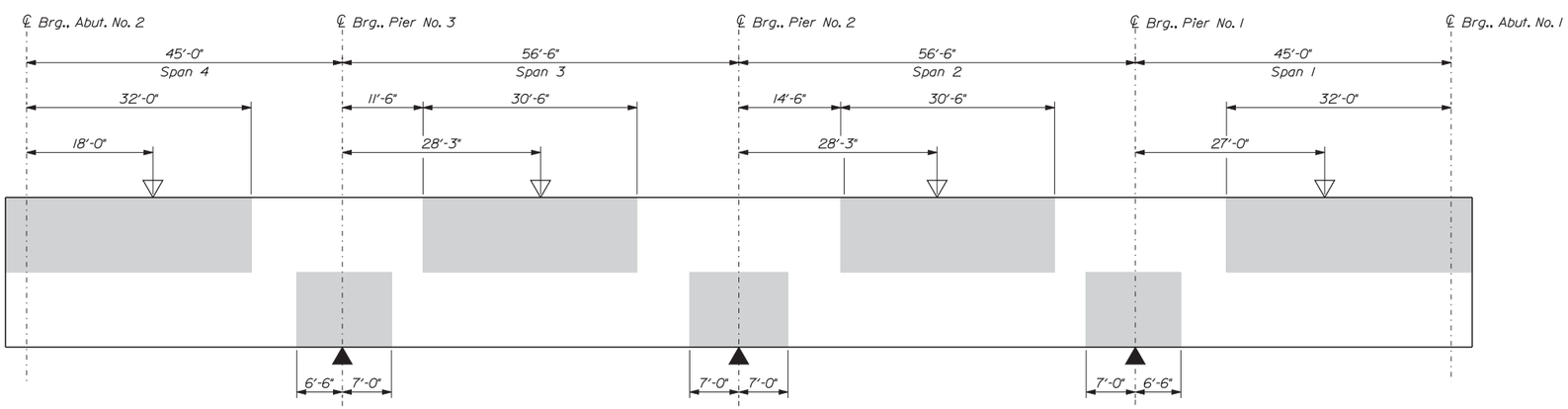

SCHEMATIC
GIRDER STRESS DIAGRAM
Not to Scale

KEY:

Indicates Areas Always in Compression. All Other Areas are in Tension or have Stress Reversals.

▽ Point of Maximum Positive Moment

▲ Point of Maximum Negative Moment

Date:12/13/2013

Filename: ...\cad\st\planset\041_beam_02.dgn

Scale: AS NOTED

No.	Revision	By	Date

Designed by:

Vanasse Hangen Brustlin, Inc.

CONSULTANT PROJECT MANAGER: T. Bryant

	By	Date		By	Date
Designed	KZS	12/13	Checked	SMH	12/13
Drawn	CMD	12/13	In Charge of	TSB	12/13

VANASSE HANGEN BRUSTLIN, INC.
500 Southborough Dr.
Suite 105B
South Portland, ME 04106
TEL (207) 889-3150
FAX (207) 253-5596

MAINE TURNPIKE

THE GOLD STAR MEMORIAL HIGHWAY

MTA PROJECT MANAGER: Ralph C. Norwood IV

SUPERSTRUCTURE REPLACEMENT
LITCHFIELD ROAD UNDERPASS

FIELD SPLICE AND STRESS DIAGRAM

SHEET NUMBER: 41

CONTRACT:2014.07

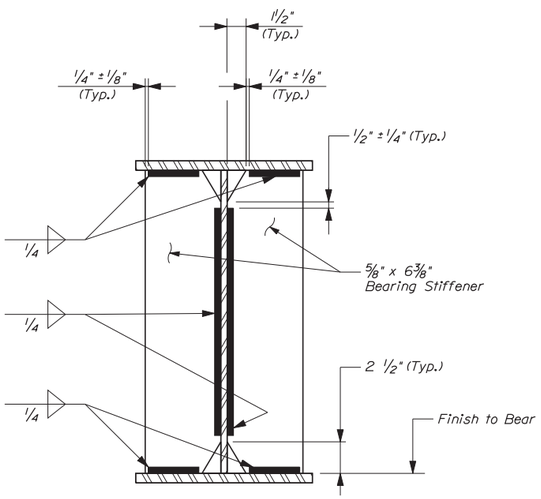

BEARING STIFFENER
Scale: 2" = 1'-0"

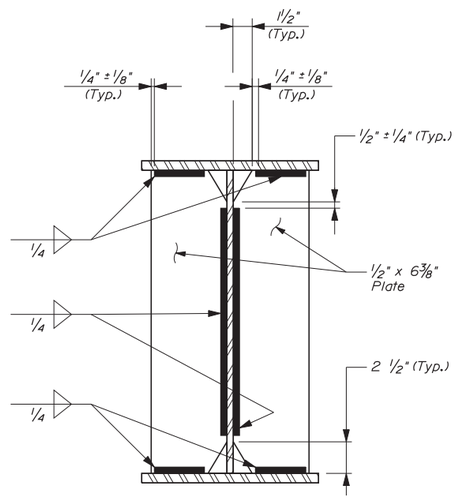

CONNECTION PLATE
(Interior Girder Shown)
Scale: 2" = 1'-0"

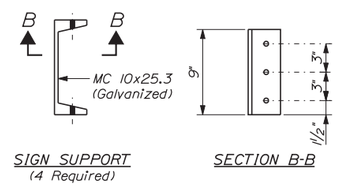

SIGN SUPPORT
(4 Required)

SECTION B-B

SIGN SUPPORT DETAILS
Scale: 1½" = 1'-0"

SIGN SUPPORT NOTES

1. Location of Sign Support shall be field located by the Resident.
2. Bolts shall be ½" diameter A325 Type I galvanized.
3. Sign Brackets shall be located within two feet of sign ends. Bracket spacing shall be 5' on center maximum.
4. Prior to installation the sign panel shall be mounted to a frame of sufficient rigidity to prevent excessive sign deformations due to wind, ice, and other loadings that occur.
5. Street Signs shall be provided by the Authority.

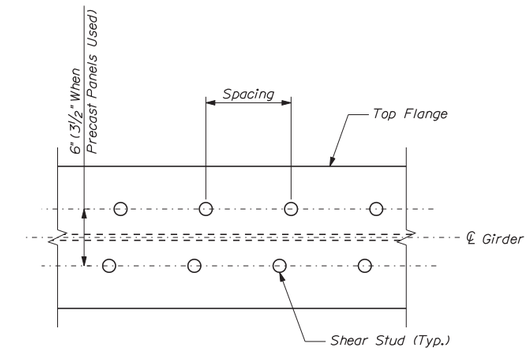

SHEAR CONNECTOR LAYOUT
(Adjust Shear Connector Spacing as Required Around Splice Plates and Bolts)
Not to Scale

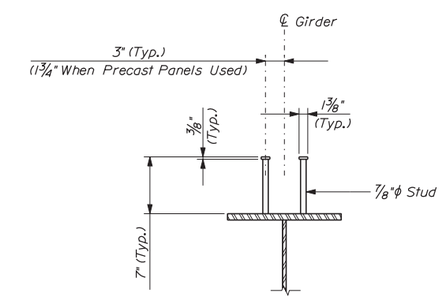

SHEAR CONNECTOR DETAIL
Not to Scale

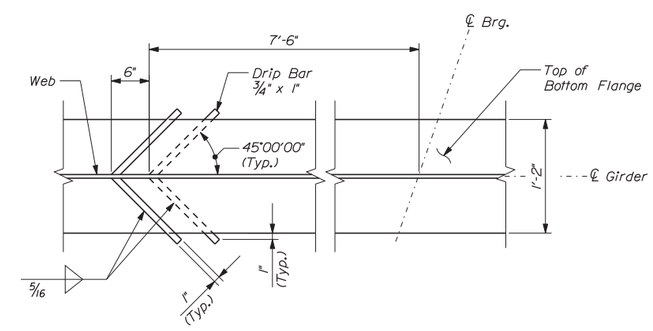

DRIP BAR DETAIL
(See Framing Plan for Locations)
Not to Scale

Date:12/13/2013

Filename: ...\cad\st\planset\042_beam_01.dgn

Scale: AS NOTED

No.	Revision	By	Date

Designed by:

Vanasse Hangen Brustlin, Inc.

CONSULTANT PROJECT MANAGER: T. Bryant

	By	Date		By	Date
Designed	KZS	12/13	Checked	SMH	12/13
Drawn	CMD	12/13	In Charge of	TSB	12/13

VANASSE HANGEN BRUSTLIN, INC.
500 Southborough Dr.
Suite 105B
South Portland, ME 04106
TEL (207) 889-3150
FAX (207) 253-5596

MAINE TURNPIKE

THE GOLD STAR MEMORIAL HIGHWAY

MTA PROJECT MANAGER: Ralph C. Norwood IV

SUPERSTRUCTURE REPLACEMENT
LITCHFIELD ROAD UNDERPASS

MISCELLANEOUS STEEL DETAILS

SHEET NUMBER: 42

CONTRACT:2014.07

TABLE OF DEFLECTIONS (in)

Girder	Load	Span No. 4										
		10/10	9/10	8/10	7/10	6/10	5/10	4/10	3/10	2/10	1/10	0/10
All Girders	Steel Dead Load	0.00	-0.02	-0.03	-0.04	-0.04	-0.04	-0.04	-0.02	-0.01	0.00	0.00
	Fluid Dead Load	0.00	-0.09	-0.16	-0.21	-0.24	-0.23	-0.19	-0.13	-0.07	-0.02	0.00
	Superimposed Dead Load	0.00	-0.03	-0.05	-0.07	-0.08	-0.07	-0.06	-0.04	-0.02	-0.01	0.00
	Sum	0.00	-0.13	-0.25	-0.32	-0.35	-0.34	-0.29	-0.20	-0.11	-0.03	0.00
Girder	Load	Span No. 3										
		10/10	9/10	8/10	7/10	6/10	5/10	4/10	3/10	2/10	1/10	0/10
All Girders	Steel Dead Load	0.00	-0.01	-0.02	-0.04	-0.05	-0.06	-0.05	-0.04	-0.02	-0.01	0.00
	Fluid Dead Load	0.00	-0.04	-0.13	-0.21	-0.28	-0.30	-0.27	-0.21	-0.12	-0.04	0.00
	Superimposed Dead Load	0.00	-0.02	-0.05	-0.08	-0.10	-0.11	-0.10	-0.08	-0.05	-0.02	0.00
	Sum	0.00	-0.07	-0.20	-0.33	-0.43	-0.46	-0.43	-0.33	-0.19	-0.06	0.00
Girder	Load	Span No. 2										
		10/10	9/10	8/10	7/10	6/10	5/10	4/10	3/10	2/10	1/10	0/10
All Girders	Steel Dead Load	0.00	-0.01	-0.02	-0.04	-0.05	-0.06	-0.05	-0.04	-0.02	-0.01	0.00
	Fluid Dead Load	0.00	-0.04	-0.12	-0.21	-0.27	-0.30	-0.28	-0.21	-0.13	-0.04	0.00
	Superimposed Dead Load	0.00	-0.02	-0.05	-0.08	-0.10	-0.11	-0.10	-0.08	-0.05	-0.02	0.00
	Sum	0.00	-0.06	-0.19	-0.33	-0.43	-0.46	-0.43	-0.33	-0.20	-0.07	0.00
Girder	Load	Span No. 1										
		10/10	9/10	8/10	7/10	6/10	5/10	4/10	3/10	2/10	1/10	0/10
All Girders	Steel Dead Load	0.00	0.00	-0.01	-0.02	-0.04	-0.04	-0.04	-0.04	-0.03	-0.02	0.00
	Fluid Dead Load	0.00	-0.02	-0.07	-0.13	-0.19	-0.23	-0.24	-0.21	-0.16	-0.09	0.00
	Superimposed Dead Load	0.00	-0.01	-0.02	-0.04	-0.06	-0.07	-0.08	-0.07	-0.05	-0.03	0.00
	Sum	0.00	-0.03	-0.11	-0.20	-0.29	-0.34	-0.35	-0.32	-0.25	-0.13	0.00

BOTTOM OF SLAB ELEVATIONS @ 10TH POINTS

Girder	℄ Brg., Abut. No. 2	4.90	4.80	4.70	4.60	4.50	4.40	4.30	4.20	4.10	℄ Brg., Pier No. 3
Span No. 4											
1	216.77	216.88	216.99	217.09	217.18	217.27	217.35	217.43	217.50	217.57	217.64
2	217.00	217.11	217.22	217.31	217.41	217.49	217.57	217.65	217.72	217.78	217.85
3	217.07	217.17	217.28	217.37	217.46	217.55	217.62	217.70	217.76	217.83	217.89
4	216.96	217.07	217.17	217.26	217.35	217.43	217.51	217.58	217.64	217.71	217.77
Span No. 3											
Girder	℄ Brg., Pier No. 3	3.90	3.80	3.70	3.60	3.50	3.40	3.30	3.20	3.10	℄ Brg., Pier No. 2
1	217.64	217.73	217.82	217.91	217.98	218.05	218.11	218.16	218.19	218.23	218.26
2	217.85	217.94	218.03	218.11	218.18	218.25	218.30	218.35	218.38	218.42	218.45
3	217.89	217.98	218.06	218.14	218.22	218.28	218.33	218.37	218.41	218.44	218.46
4	217.77	217.85	217.93	218.01	218.08	218.14	218.19	218.23	218.26	218.29	218.31
Span No. 2											
Girder	℄ Brg., Pier No. 2	2.90	2.80	2.70	2.60	2.50	2.40	2.30	2.20	2.10	℄ Brg., Pier No. 1
1	218.26	218.30	218.34	218.37	218.40	218.41	218.42	218.41	218.40	218.38	218.36
2	218.45	218.48	218.52	218.55	218.57	218.58	218.59	218.58	218.56	218.54	218.52
3	218.46	218.50	218.53	218.56	218.58	218.59	218.59	218.58	218.56	218.54	218.51
4	218.31	218.34	218.37	218.40	218.41	218.42	218.42	218.41	218.39	218.36	218.33
Span No. 1											
Girder	℄ Brg., Pier No. 1	1.90	1.80	1.70	1.60	1.50	1.40	1.30	1.20	1.10	℄ Brg., Abut. No. 1
1	218.36	218.35	218.34	218.33	218.31	218.28	218.25	218.22	218.17	218.12	218.07
2	218.52	218.51	218.49	218.48	218.46	218.43	218.40	218.36	218.31	218.26	218.21
3	218.51	218.49	218.48	218.46	218.44	218.41	218.37	218.33	218.29	218.23	218.17
4	218.33	218.31	218.30	218.28	218.25	218.22	218.18	218.14	218.09	218.04	217.97

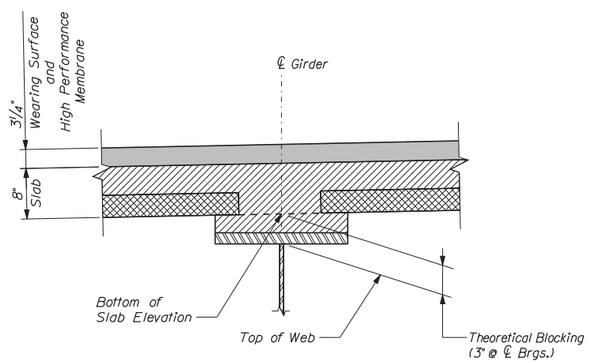

BLOCKING DETAIL
Not to Scale
(Deck Panel Option Shown)

Date:12/13/2013

Filename: ...\st\planset\043_table_01.dgn

Scale: AS NOTED

No.	Revision	By	Date

Designed by:

VHB Vanasse Hangen Brustlin, Inc.

CONSULTANT PROJECT MANAGER: T. Bryant

	By	Date		By	Date
Designed	KZS	12/13	Checked	SMH	12/13
Drawn	CMD	12/13	In Charge of	TSB	12/13

VANASSE HANGEN BRUSTLIN, INC.
500 Southborough Dr.
Suite 105B
South Portland, ME 04106
TEL (207) 889-3150
FAX (207) 253-5596

MAINE TURNPIKE

THE GOLD STAR MEMORIAL HIGHWAY

MTA PROJECT MANAGER: Ralph C. Norwood IV

SUPERSTRUCTURE REPLACEMENT
LITCHFIELD ROAD UNDERPASS

TABLE OF DEFLECTIONS
AND BOTTOM OF SLAB ELEVATIONS

SHEET NUMBER: 43

CONTRACT:2014.07

TABLE OF CAMBER ORDINATES PER SPAN ("COS") (in) @ 10TH POINTS

Girder	℄ Brg., Abut. No. 2	4.90	4.80	4.70	4.60	4.50	4.40	4.30	4.20	4.10	℄ Brg., Pier No. 3
Span No. 4											
1	0.00	0.31	0.56	0.74	0.83	0.84	0.76	0.62	0.43	0.21	0.00
2	0.00	0.31	0.56	0.74	0.83	0.84	0.76	0.62	0.43	0.21	0.00
3	0.00	0.31	0.56	0.74	0.83	0.84	0.76	0.62	0.43	0.21	0.00
4	0.00	0.31	0.56	0.74	0.83	0.84	0.76	0.62	0.43	0.21	0.00
Span No. 3											
Girder	℄ Brg., Pier No. 3	3.90	3.80	3.70	3.60	3.50	3.40	3.30	3.20	3.10	℄ Brg., Pier No. 2
1	0.00	0.35	0.70	0.99	1.18	1.25	1.18	0.98	0.69	0.34	0.00
2	0.00	0.35	0.70	0.99	1.18	1.25	1.18	0.98	0.69	0.34	0.00
3	0.00	0.35	0.70	0.99	1.18	1.25	1.18	0.98	0.69	0.34	0.00
4	0.00	0.35	0.70	0.99	1.18	1.25	1.18	0.98	0.69	0.34	0.00
Span No. 2											
Girder	℄ Brg., Pier No. 2	2.90	2.80	2.70	2.60	2.50	2.40	2.30	2.20	2.10	℄ Brg., Pier No. 1
1	0.00	0.34	0.69	0.98	1.18	1.25	1.18	0.99	0.70	0.35	0.00
2	0.00	0.34	0.69	0.98	1.18	1.25	1.18	0.99	0.70	0.35	0.00
3	0.00	0.34	0.69	0.98	1.18	1.25	1.18	0.99	0.70	0.35	0.00
4	0.00	0.34	0.69	0.98	1.18	1.25	1.18	0.99	0.70	0.35	0.00
Span No. 1											
Girder	℄ Brg., Pier No. 1	1.90	1.80	1.70	1.60	1.50	1.40	1.30	1.20	1.10	℄ Brg., Abut. No. 1
1	0.00	0.21	0.43	0.62	0.76	0.84	0.83	0.74	0.56	0.31	0.00
2	0.00	0.21	0.43	0.62	0.76	0.84	0.83	0.74	0.56	0.31	0.00
3	0.00	0.21	0.43	0.62	0.76	0.84	0.83	0.74	0.56	0.31	0.00
4	0.00	0.21	0.43	0.62	0.76	0.84	0.83	0.74	0.56	0.31	0.00

TABLE OF CAMBER DIMENSIONS (ft)

Girder	A2	P3	P2	P1	A1
1	0.00	0.87	1.49	1.59	1.30
2	0.00	0.85	1.45	1.52	1.20
3	0.00	0.83	1.40	1.45	1.11
4	0.00	0.81	1.35	1.37	1.01

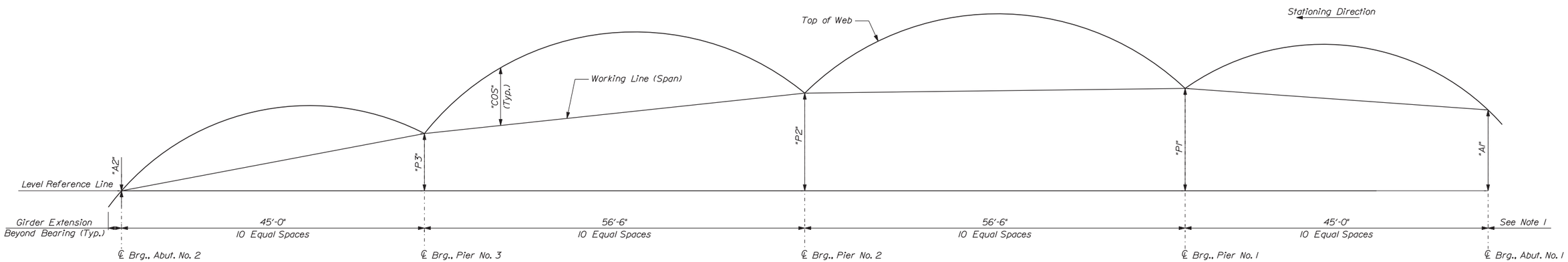

CAMBER DIAGRAM
Not to Scale

SHEET NOTES:

1. Dimensions shown do not account for grade, shop fabrication temperature, or girder extensions beyond bearing at abutments.

Scale: AS NOTED

No.	Revision	By	Date

Designed by:

Vanasse Hangen Brustlin, Inc.

CONSULTANT PROJECT MANAGER: T. Bryant

	By	Date		By	Date
Designed	KZS	12/13	Checked	SMH	12/13
Drawn	CMD	12/13	In Charge of	TSB	12/13

VANASSE HANGEN BRUSTLIN, INC.
500 Southborough Dr.
Suite 105B
South Portland, ME 04106
TEL (207) 889-3150
FAX (207) 253-5596

MAINE TURNPIKE

THE GOLD STAR MEMORIAL HIGHWAY

MTA PROJECT MANAGER: Ralph C. Norwood IV

SUPERSTRUCTURE REPLACEMENT
LITCHFIELD ROAD UNDERPASS

CAMBER ORDINATES AND DIAGRAM

SHEET NUMBER: 44

CONTRACT:2014.07

Date:12/13/2013
Filename: ...\st\planset\044_camber_01.dgn

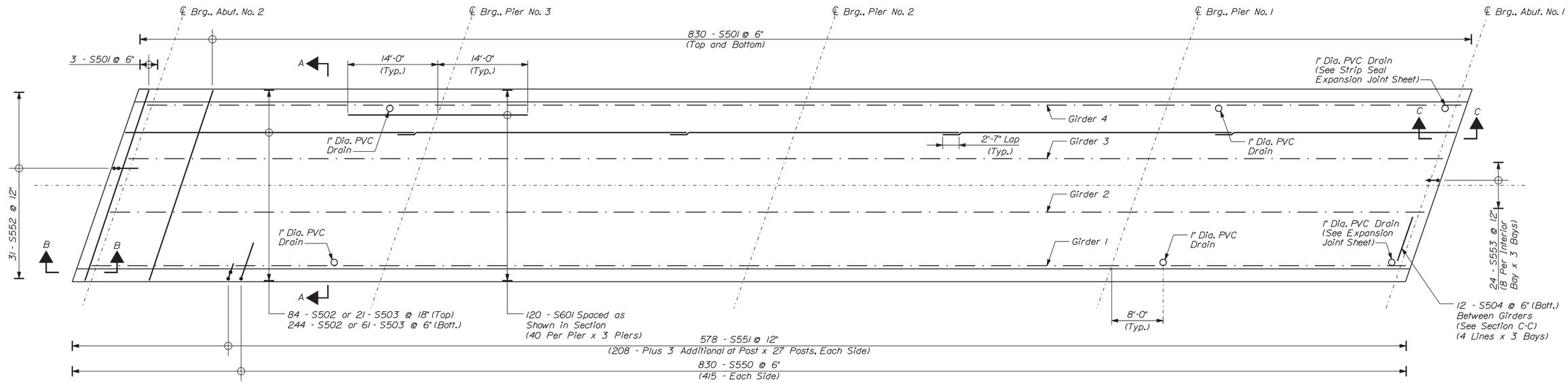

DECK REINFORCEMENT PLAN

(1" PVC Drains Enlarged for Clarity)
Scale: 1/8" = 1'-0"

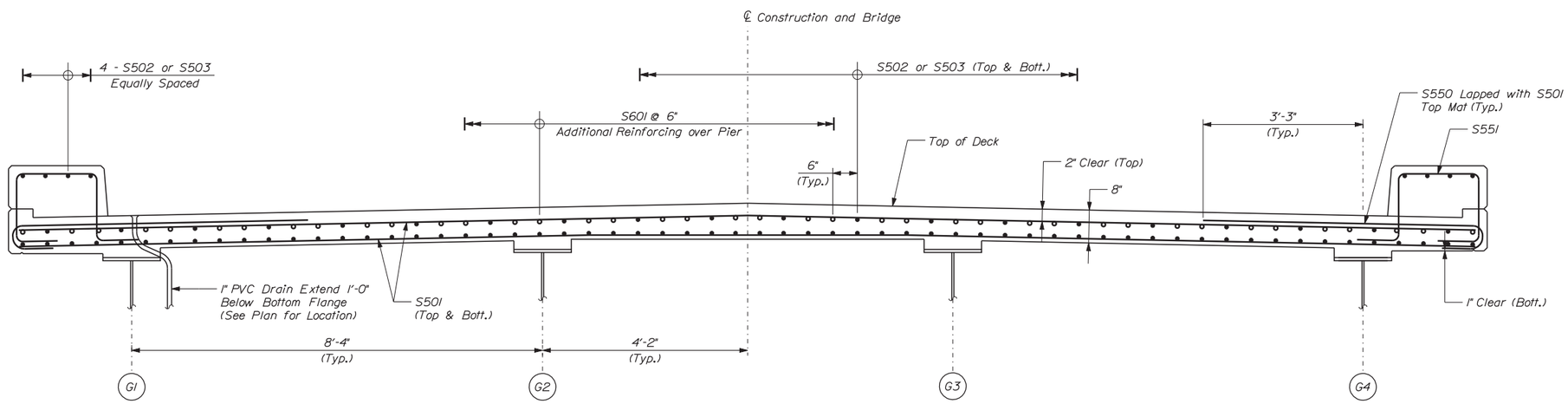

SECTION A-A

(Looking Up Station)
(Pavement not Shown)
Scale: 3/4" = 1'-0"

NOTE

1. Alternate position of bars S502 and S503 such that longitudinal bar laps are staggered between adjacent lines of reinforcement.

Scale: AS NOTED

No.	Revision	By	Date

Designed by:

Vanasse Hangen Brustlin, Inc.

CONSULTANT PROJECT MANAGER: T. Bryant

	By	Date		By	Date
Designed	KZS	12/13	Checked	SMH	12/13
Drawn	CMD	12/13	In Charge of	TSB	12/13

VANASSE HANGEN BRUSTLIN, INC.
500 Southborough Dr.
Suite 105B
South Portland, ME 04106
TEL (207) 889-3150
FAX (207) 253-5596

MAINE TURNPIKE

THE GOLD STAR MEMORIAL HIGHWAY

MTA PROJECT MANAGER: Ralph C. Norwood IV

SUPERSTRUCTURE REPLACEMENT
LITCHFIELD ROAD UNDERPASS

DECK REINFORCEMENT (1 OF 2)

SHEET NUMBER: 45

CONTRACT:2014.07

Date:12/13/2013
Filename: ...\st\planset\045_deckrein_01.dgn

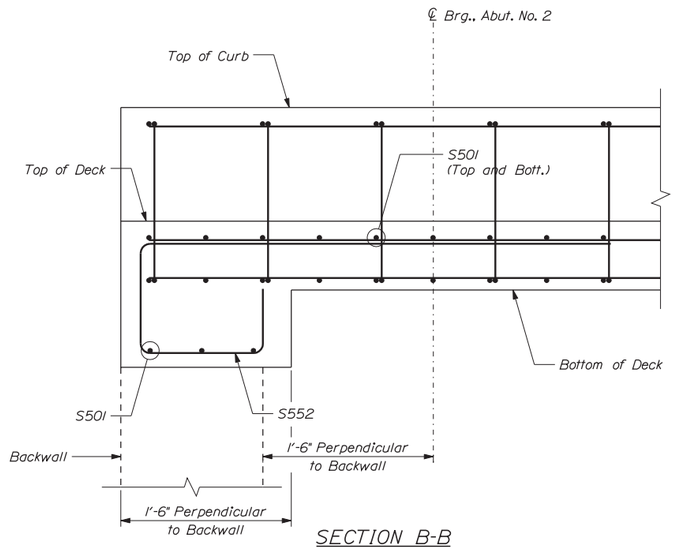

SECTION B-B
(Pavement not Shown)
Scale: 1½" = 1'-0"

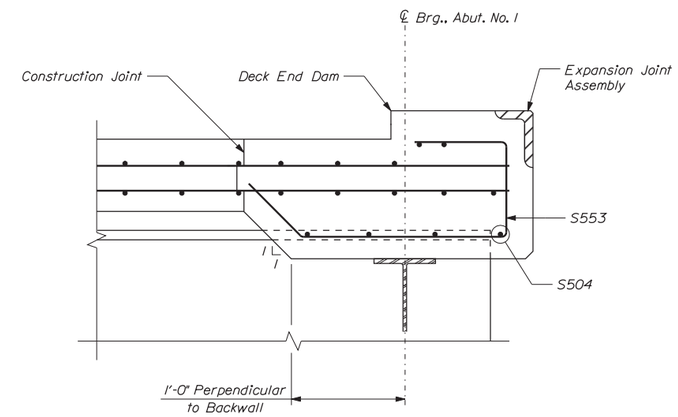

SECTION C-C
(Pavement not Shown)
Scale: 1½" = 1'-0"

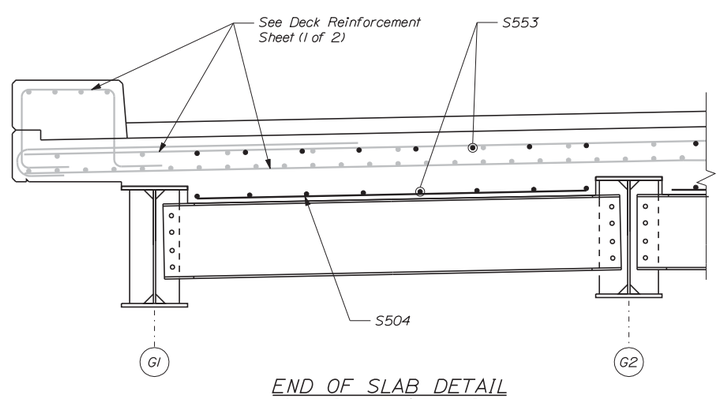

END OF SLAB DETAIL
(Shown Parallel to Abutment Brg.)
Scale: ¾" = 1'-0"

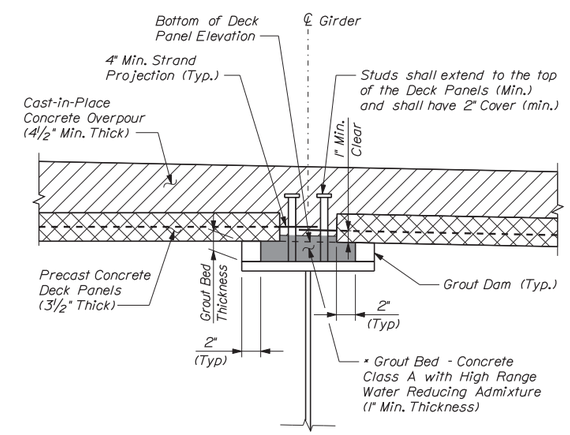

* Ensure Grout Flows Under Panel for Complete Bearing

PRECAST PANEL HAUNCH DETAIL
(Pavement Not Shown)
Scale: 1½" = 1'-0"

Date:12/13/2013

Filename: ...\st\planset\046_deckrein_02.dgn

Scale: AS NOTED

No.	Revision	By	Date

Designed by:

Vanasse Hangen Brustlin, Inc.

CONSULTANT PROJECT MANAGER: T. Bryant

	By	Date		By	Date
Designed	KZS	12/13	Checked	SMH	12/13
Drawn	CMD	12/13	In Charge of	TSB	12/13

VANASSE HANGEN BRUSTLIN, INC.
500 Southborough Dr.
Suite 105B
South Portland, ME 04106
TEL (207) 889-3150
FAX (207) 253-5596

MAINE TURNPIKE

THE GOLD STAR MEMORIAL HIGHWAY

MTA PROJECT MANAGER: Ralph C. Norwood IV

SUPERSTRUCTURE REPLACEMENT
LITCHFIELD ROAD UNDERPASS

DECK REINFORCEMENT (2 OF 2)

SHEET NUMBER: 46

CONTRACT:2014.07

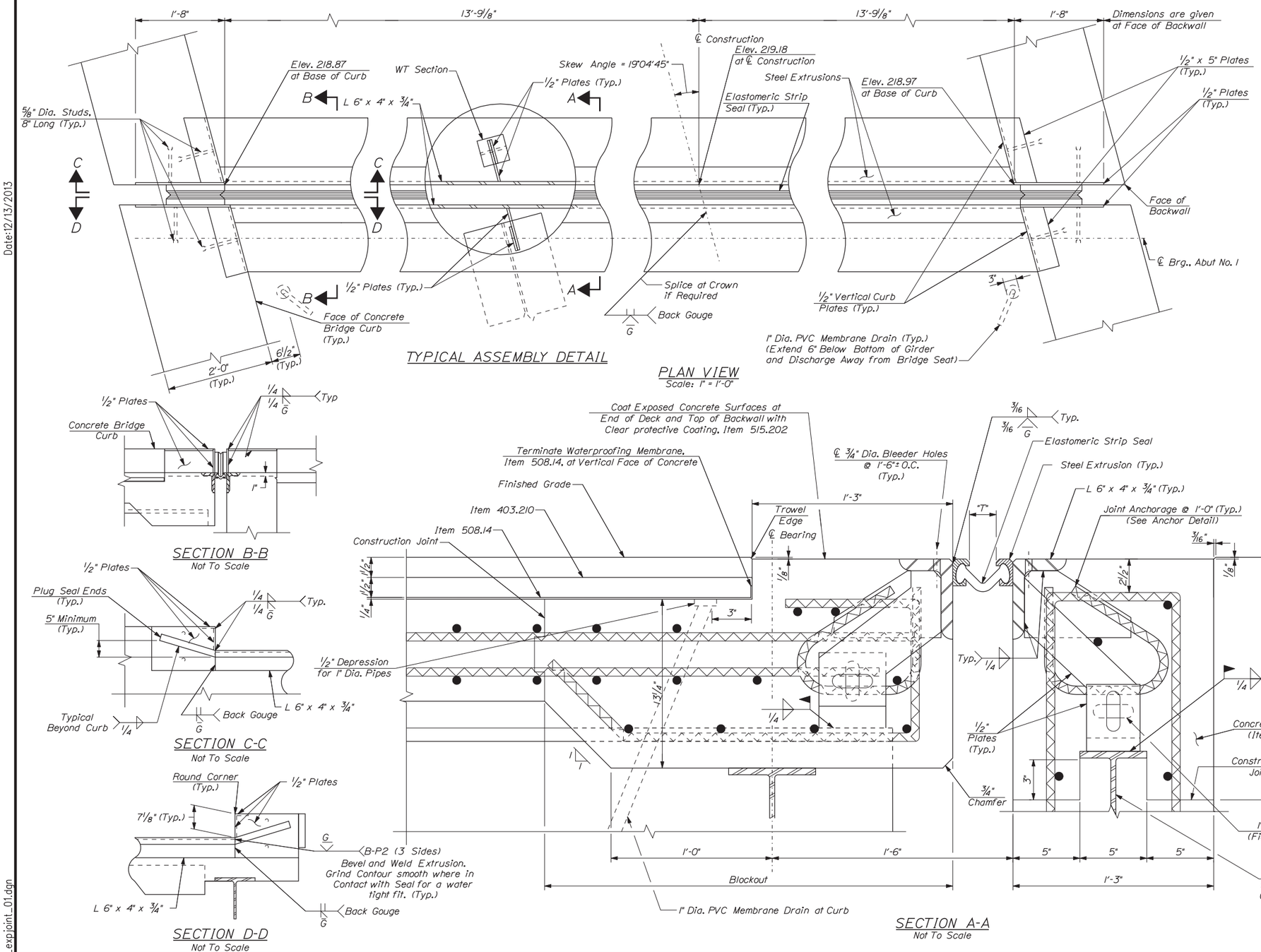

EXPANSION JOINT NOTES:

1. Expansion joint steel shall be galvanized AASHTO M270 Grade 50 (ASTM A709 Grade 50), except as otherwise allowed. The entire assembly, including elastomeric seal, shall be paid for as Item 520.21, Expansion Device - Gland Seal.
2. Splices for expansion joint steel shall develop full strength.
3. The expansion joint shall be preset to the anticipated temperature at the time of installation. Final setting in the field shall be determined by the Resident (see Temperature Adjustment Table).
4. Elastomeric strip seal shall be furnished in one continuous length. No splices will be allowed.
5. Joint support plates shall be shop welded to the expansion joint steel and shall be vertical after the joint assembly has been adjusted for roadway cross-slope and grade.
6. Immediately after the joint has been secured to the structural steel and backwall, remove shipping devices and grind smooth any welds on exposed surfaces. repair any damage to exposed painted surfaces with zinc-rich primer.
7. Protect top of expansion joint during placement of concrete and bituminous pavement.
8. The elastomeric strip seal shall have a minimum range of movement of 2.5 inches. Strip seal shall be D.S. Brown A2R-400 or Watson Bowman Acme SE-400.
9. No "low profile" steel extrusions shall be allowed.
10. Concrete under angle armor and curb armor shall be hand packed to ensure proper consolidation.

Temperature Adjustment Table

Temperature	"T"
15°F	2 3/8"
30°F	2 3/16"
45°F	2"
60°F	1 13/16"
75°F	1 5/8"
90°F	1 7/16"

"T" dimensions are perpendicular to face of backwall

Date:12/13/2013

Filename: ...\st\planset\047_expjoint_01.dgn

Scale:

No.	Revision	By	Date

Designed by:

Vanasse Hangen Brustlin, Inc.

CONSULTANT PROJECT MANAGER: T. Bryant

	By	Date		By	Date
Designed	KZS	12/13	Checked	SMH	12/13
Drawn	CMD	12/13	In Charge of	TSB	12/13

VANASSE HANGEN BRUSTLIN, INC.
500 Southborough Dr.
Suite 105B
South Portland, ME 04106
TEL (207) 889-3150
FAX (207) 253-5596

MAINE TURNPIKE

THE GOLD STAR MEMORIAL HIGHWAY

MTA PROJECT MANAGER: Ralph C. Norwood IV

SUPERSTRUCTURE REPLACEMENT
LITCHFIELD ROAD UNDERPASS

STRIP SEAL EXPANSION JOINT

SHEET NUMBER: 47

CONTRACT:2014.07

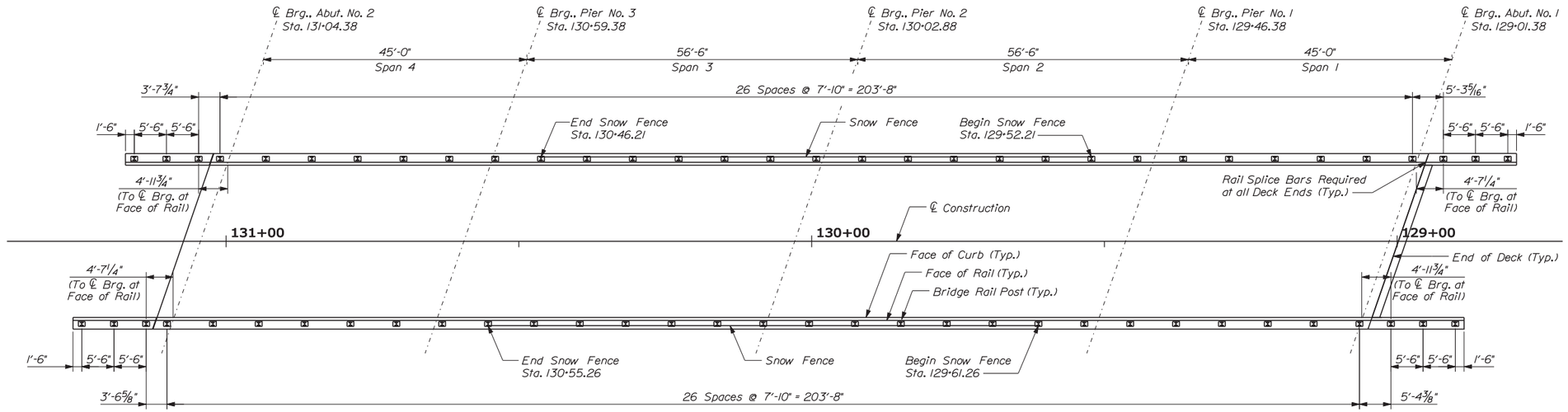

BRIDGE RAIL LAYOUT

(Dimensions Face of Rail)
Scale: 3/32" = 1'-0"

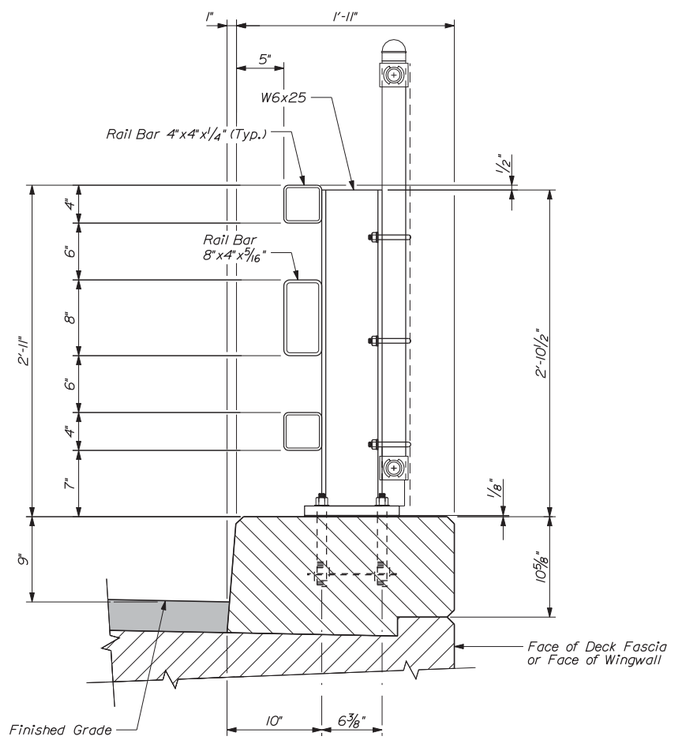

3-BAR TRAFFIC RAIL

Scale: 1 1/2" = 1'-0"

BRIDGE RAIL MATERIAL NOTES:

1. Structural tubing shall conform to the requirements of ASTM A500, Grade B. Structural Tubing. Rail tubing shall meet the longitudinal charpy v-notch requirements of 15 ft. Lbs. At 0 degrees F. For ASTM A500, Grade B. The test samples shall be taken after forming the tubes.
2. Rail posts and base plates shall conform to the requirements of ASTM A572 Grade 50, except anchor plates may be ASTM A36.
3. Bolts and matching nuts for rail-to-post attachment shall conform to ASTM A307 or A449. All other bolts and nuts shall conform to ASTM 307 and ASTM 563 Grade A respectively or better, except ASTM A307 nuts may be used on the bottom of anchor assembly. Washers shall be hardened steel commercial Type A plain wide washers and shall meet dimensional requirements of A.N.S.I. B18.22. Anchor rods shall conform to ASTM A449.
4. All steel components (except stainless) shall be galvanized after fabrication in conformance to AASHTO M232 (ASTM A153) and AASHTO M111 (ASTM A123). The galvanizing kettle shall have 0.05 to 0.09 percent nickel. Galvanizing surfaces shall have a uniform appearance and galvanizing material shall be properly stored.
5. Preformed bearing pads (1/8" thick) shall conform to AASHTO M251.
6. See MaineDOT Standard Details of Steel Bridge Railing for notes and other information not shown.

Scale: AS NOTED

No.	Revision	By	Date

Designed by:

Vanasse Hangen Brustlin, Inc.

CONSULTANT PROJECT MANAGER: T. Bryant

	By	Date		By	Date
Designed	KZS	12/13	Checked	SMH	12/13
Drawn	CMD	12/13	In Charge of	TSB	12/13

VANASSE HANGEN BRUSTLIN, INC.
500 Southborough Dr.
Suite 105B
South Portland, ME 04106
TEL (207) 889-3150
FAX (207) 253-5596

MAINE TURNPIKE

THE GOLD STAR MEMORIAL HIGHWAY

MTA PROJECT MANAGER: Ralph C. Norwood IV

SUPERSTRUCTURE REPLACEMENT
LITCHFIELD ROAD UNDERPASS

BRIDGE RAIL DETAILS

SHEET NUMBER: 48

CONTRACT: 2014.07

Date: 12/13/2013
Filename: ...\cad\st\planset\048_rail_01.dgn

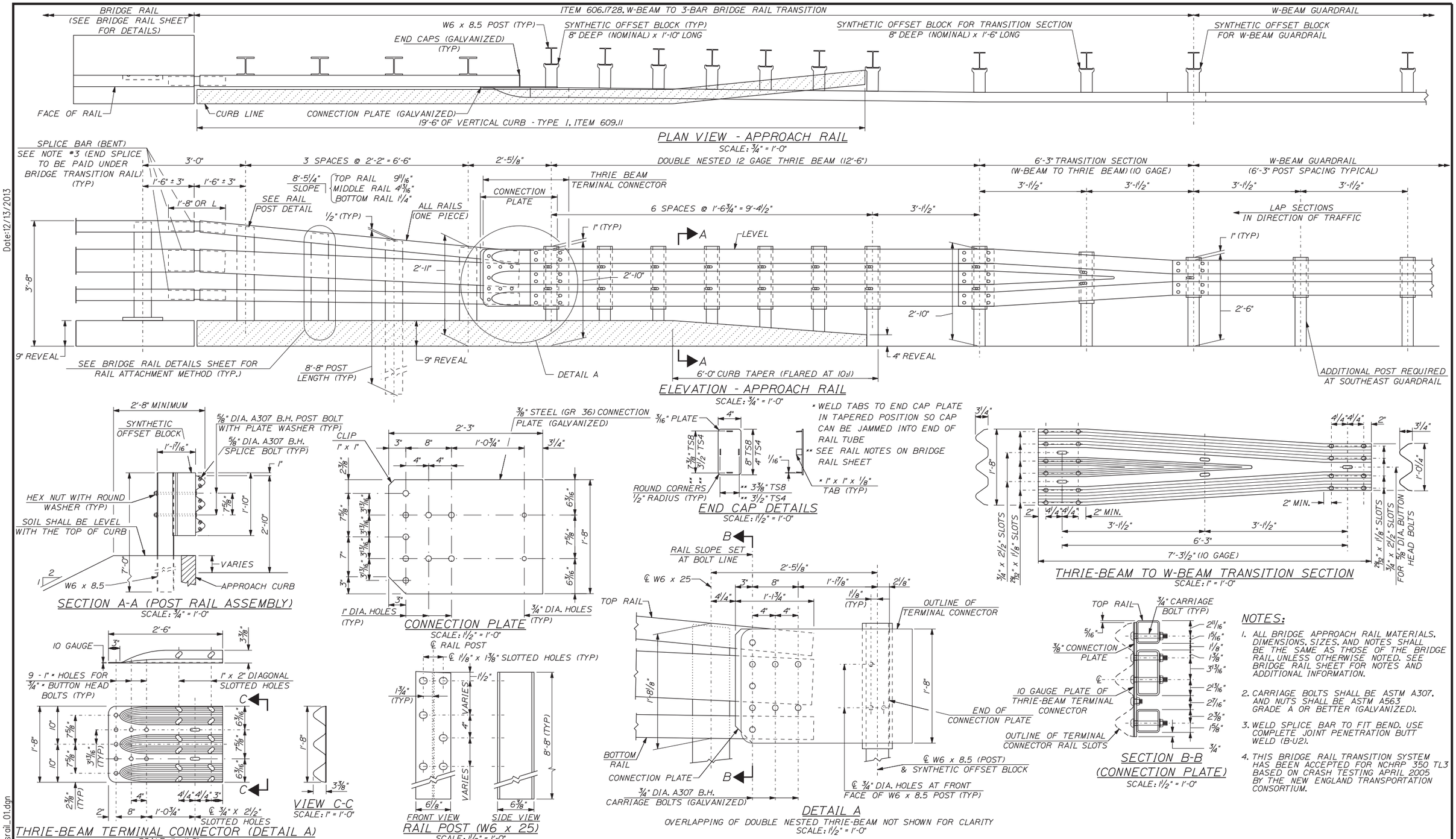

NOTES:

1. ALL BRIDGE APPROACH RAIL MATERIALS, DIMENSIONS, SIZES, AND NOTES SHALL BE THE SAME AS THOSE OF THE BRIDGE RAIL, UNLESS OTHERWISE NOTED. SEE BRIDGE RAIL SHEET FOR NOTES AND ADDITIONAL INFORMATION.
2. CARRIAGE BOLTS SHALL BE ASTM A307, AND NUTS SHALL BE ASTM A563 GRADE A OR BETTER (GALVANIZED).
3. WELD SPLICE BAR TO FIT BEND. USE COMPLETE JOINT PENETRATION BUTT WELD (B-U2).
4. THIS BRIDGE RAIL TRANSITION SYSTEM HAS BEEN ACCEPTED FOR NCHRP 350 TL3 BASED ON CRASH TESTING APRIL 2005 BY THE NEW ENGLAND TRANSPORTATION CONSORTIUM.

Scale: AS NOTED

No.	Revision	By	Date

Designed by: Vanasse Hangen Brustlin, Inc.

CONSULTANT PROJECT MANAGER: T. Bryant

	By	Date		By	Date
Designed	KZS	12/13	Checked	SMH	12/13
Drawn	CMD	12/13	In Charge of	TSB	12/13

VANASSE HANGEN BRUSTLIN, INC.
500 Southborough Dr.
Suite 105B
South Portland, ME 04106
TEL (207) 889-3150
FAX (207) 253-5596

MAINE TURNPIKE

THE GOLD STAR MEMORIAL HIGHWAY

MTA PROJECT MANAGER: Ralph C. Norwood IV

SUPERSTRUCTURE REPLACEMENT
LITCHFIELD ROAD UNDERPASS

BRIDGE RAIL TRANSITION

SHEET NUMBER: 49

CONTRACT: 2014.07

Date: 12/13/2013

Filename: ...\plansset\049_transrail_01.dgn

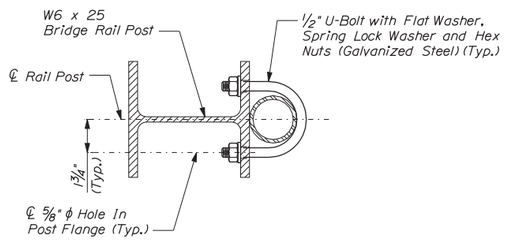

SECTION A-A
(At Interior Post)
Scale: 3" = 1'-0"

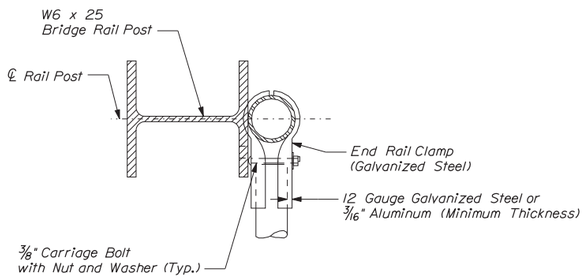

SECTION A-A
(At End Post)
(U-Bolt Not Shown)
Scale: 3" = 1'-0"

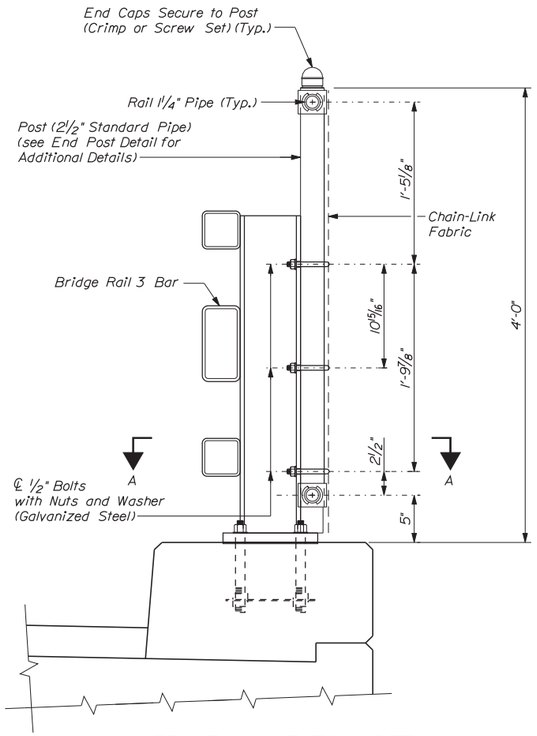

SNOW FENCE CONNECTION DETAIL
Scale: 1 1/2" = 1'-0"

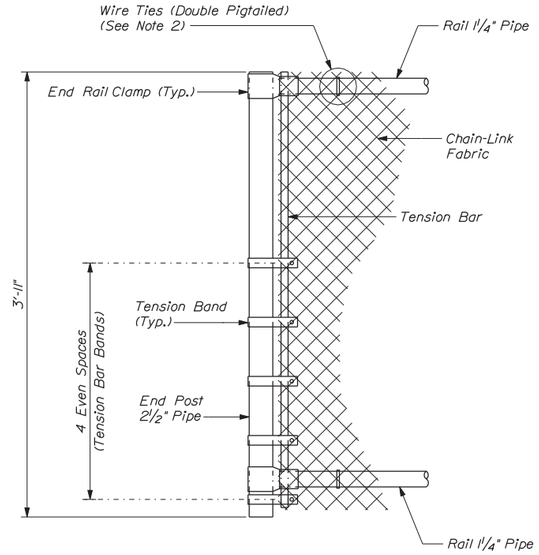

END POST DETAIL
Scale: 1 1/2" = 1'-0"

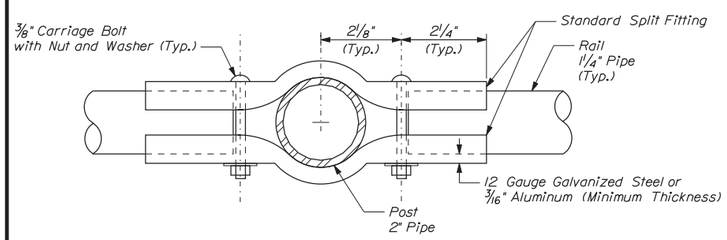

BOULEVARD CLAMP DETAIL
Scale: 6" = 1'-0"

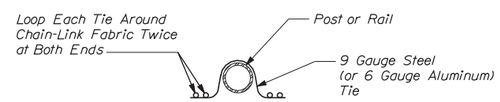

DOUBLE PIGTAILED TIE
Not to Scale

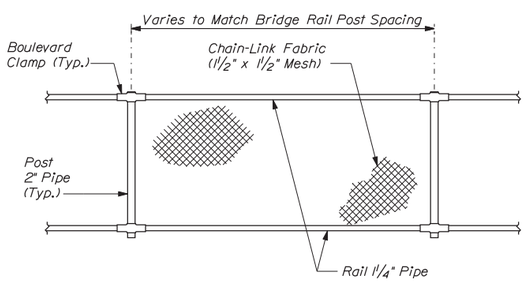

ELEVATION - SNOW FENCE
Not to Scale

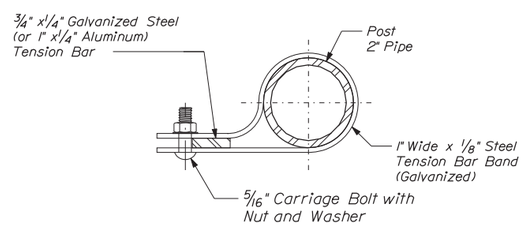

TENSION BAND DETAIL
Scale: 6" = 1'-0"

SNOW FENCE NOTES

1. Chain-link fabric shall be 9 gauge steel, zinc-coated conforming to AASHTO M181, Type I, Class D (ASTM A392), aluminum-coated conforming to AASHTO M181, Type II (ASTM A491). Chain-link fabric shall be knuckled on top and bottom. The size of wire mesh (fabric) shall be 1 1/2".

2. Wire ties shall be standard round 9 gauge zinc- or aluminum-coated steel or 6 gauge aluminum alloy conforming to ASTM F626. All ties shall be wrapped around chain-link fabric twice (double pigtailed) at both ends. Space ties @ 6" o.c. to bottom rail and @ 12" o.c. to all posts and other rails. Mechanical/Power fastened fence ties acceptable.

3. Post and rail pipe shall be hot-dip galvanized steel conforming to AASHTO M181, Grade 1 (ASTM F1083) or aluminum alloy conforming to AASHTO M181 (ASTM B429, alloy 6063-T6). All pipe shall be schedule 40, standard weight. Nominal pipe sizes are shown on the drawing.

4. Tension bars, bar bands, boulevard and end rail clamps shall be steel or aluminum alloy conforming to AASHTO M181 (ASTM F626). Steel components shall be hot-dip galvanized in accordance with AASHTO M111 (ASTM A123) or AASHTO M232 (ASTM A153) as applicable.

5. All bolts and nuts shall be steel conforming to ASTM A307 and ASTM A563 grade a respectively. Washers shall be hardened steel commercial type a plain and shall meet the dimensional requirements of ANSI B18.22. All bolts, nuts and washers shall be hot-dip galvanized in accordance with AASHTO M111 (ASTM A123) or AASHTO M232 (ASTM A153) as applicable.

6. Rail may be field cut (sawn) to fit post spacing. Galvanized rail, cut or drilled as allowed.

7. See Bridge Rail Details Sheet for additional details.

Date:12/13/2013

Filename: ...\cad\st\planset\050_snow_01.dgn

Scale: AS NOTED

No.	Revision	By	Date

Designed by:

Vanasse Hangen Brustlin, Inc.

CONSULTANT PROJECT MANAGER: T. Bryant

	By	Date		By	Date
Designed	KZS	12/13	Checked	SMH	12/13
Drawn	CMD	12/13	In Charge of	TSB	12/13

VANASSE HANGEN BRUSTLIN, INC.
500 Southborough Dr.
Suite 105B
South Portland, ME 04106
TEL (207) 889-3150
FAX (207) 253-5596

MAINE TURNPIKE

THE GOLD STAR MEMORIAL HIGHWAY

MTA PROJECT MANAGER: Ralph C. Norwood IV

SUPERSTRUCTURE REPLACEMENT
LITCHFIELD ROAD UNDERPASS

SNOW FENCE DETAILS

SHEET NUMBER: 50

CONTRACT:2014.07

STRAIGHT BARS

MARK	QTY.	LENGTH	LOCATION	MARK	QTY.	LENGTH	LOCATION
A501	29	6'-0"	Abutment 1				
A502	29	5'-3"					
A503	63	3'-0"					
A504	3	29'-3"					
A505	16	31'-5"					
A506	2	7'-6"					
A510	68	3'-11"	Abutment 1 Wingwalls				
A511	4	6'-9"					
A512	9	14'-8"					
A513	9	15'-4"					
B501	33	4'-4"	Abutment 2				
B502	33	3'-8"					
B503	63	3'-0"					
B504	4	29'-3"					
B505	12	31'-5"					
B506	2	7'-7"					
B510	62	4'-3"	Abutment 2 Wingwalls				
B511	9	13'-2"					
B512	9	13'-11"					
P501	12	30'-2"	Piers				
P1001	12	31'-2"					
S501	833	31'-3"	Deck Slab and Curbs				
S502	360	45'-0"					
S503	90	37'-0"					
S504	12	7'-1"					
S601	120	28'-0"					

MARK	QTY.	LENGTH	LOCATION	MARK	QTY.	LENGTH	LOCATION

BENT BARS

MARK	QTY.	LENGTH	TYPE	A	B	C	D	E	F	G	H	O	R	LOCATION
A550	62	4'-9"	L	1'-6"	3'-3"									Abutment 1
A551	29	3'-7"	S	0'-0"	1'-4"	0'-11"	1'-4"			0'-0"				
A552	8	3'-3"	L	2'-5"	0'-10"									
A553	4	5'-6 1/8"	CB	0'-0"	1'-0"	0'-3 1/2"	3'-2 5/8"	1'-0"	0'-0"				0'-1 7/8"	
A554	4	4'-2"	S	0'-0"	1'-0"	1'-8"	1'-6"			0'-0"				
A555	6	3'-5 1/4"	PR	1'-0"	1'-5 1/4"	1'-0"	0'-11"	0'-5 1/2"				0'-11"	0'-5 1/2"	
A556	6	2'-0"	V				1'-0"	1'-0"			0'-11 3/8"			
A557	6	2'-0"	A				1'-0"	1'-0"			0'-11 3/8"			
A558	4	2'-0"	L	1'-0"	1'-0"									
A559	4	5'-1"	L	3'-9"	1'-4"									
A560	4	3'-8"	V				2'-2"	1'-6"			1'-4"			Abutment 1 Wingwalls
A561	2	3'-2"	S	0'-0"	0'-10"	1'-6"	0'-10"			0'-0"				
A562	2	4'-4"	S	0'-0"	1'-5"	1'-6"	1'-5"			0'-0"				
A563	51	4'-0"	S	0'-0"	1'-2"	1'-8"	1'-2"			0'-0"				
A564	8	3'-6"	S	0'-0"	1'-0"	1'-6"	1'-0"			0'-0"				
B550	62	5'-3"	L	2'-0"	3'-3"									Abutment 2
B551	33	3'-7"	S	0'-0"	1'-4"	0'-11"	1'-4"			0'-0"				
B552	8	3'-2"	L	2'-4"	0'-10"									
B553	4	5'-6 1/8"	CB	0'-0"	1'-0"	0'-3 1/2"	3'-2 5/8"	1'-0"	0'-0"				0'-1 7/8"	
B554	4	4'-2"	S	0'-0"	1'-0"	1'-8"	1'-6"			0'-0"				
B555	6	3'-5 1/4"	PR	1'-0"	1'-5 1/4"	1'-0"						0'-11"	0'-5 1/2"	
B556	4	2'-6"	L	1'-6"	1'-0"									
B557	4	5'-1"	L	3'-9"	1'-4"									
B560	4	3'-8"	V				2'-2"	1'-6"			1'-4"			Abutment 2 Wingwalls
B561	2	3'-2"	S	0'-0"	0'-10"	1'-6"	0'-10"			0'-0"				
B562	2	4'-4"	S	0'-0"	1'-5"	1'-6"	1'-5"			0'-0"				
B563	49	4'-0"	S	0'-0"	1'-2"	1'-8"	1'-2"			0'-0"				
B564	16	3'-6"	S	0'-0"	1'-0"	1'-6"	1'-0"			0'-0"				
P550	99	6'-4"	S	0'-0"	1'-10"	2'-8"	1'-10"			0'-0"				Piers
P551	198	2'-10"	C	0'-7"	2'-3"	0'-0"								
P552	24	3'-0"	A				1'-2"	1'-10"			1'-9"			
P553	12	5'-6"	S	0'-0"	1'-6"	2'-6"	1'-6"			0'-0"				
S550	830	6'-6"	C	0'-7"	5'-11"	0'-0"								Deck Slab and Curbs
S551	578	5'-9"	S	0'-10"	1'-3"	1'-7"	1'-3"			0'-10"				
S552	31	5'-2"	EP	0'-6"	1'-1"	0'-10"	2'-9"	0'-0"	0'-0"					
S553	24	4'-8"	SJ	0'-0"	0'-10"	1'-11"	1'-1"	0'-10"						
Note: The following bars are uncoated (plain): P551														

MARK	QTY.	LENGTH	TYPE	A	B	C	D	E	F	G	H	O	R	LOCATION

TYPE - BENDING DIAGRAMS

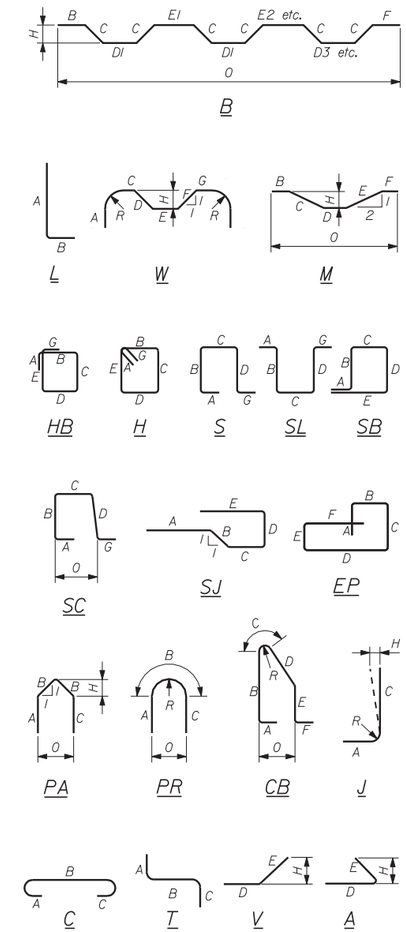

All dimensions are out-to-out of bar.

Bending details and hooks shall conform to the recommendations of the current revision of ACI Standard 315 and ACI Standard 318.

Reinforcing Bar: ASTM A615/A615M, Grade 60

GENERAL NOTES

1. The first digit following the letter(s) of the mark indicate the size ofthe bar:

   Mark "A502" = bar size #5
   Mark "P805" = bar size #8
   Mark "S650" = bar size #6

Date:12/13/2013

Filename: ...\st\planset\051_reinsch_01.dgn

Scale: NOT TO SCALE

No.	Revision	By	Date

Designed by:

Vanasse Hangen Brustlin, Inc.

CONSULTANT PROJECT MANAGER: T. Bryant

	By	Date		By	Date
Designed	KZS	12/13	Checked	SMH	12/13
Drawn	CMD	12/13	In Charge of	TSB	12/13

VANASSE HANGEN BRUSTLIN, INC.
500 Southborough Dr.
Suite 105B
South Portland, ME 04106
TEL (207) 889-3150
FAX (207) 253-5596

MAINE TURNPIKE

THE GOLD STAR MEMORIAL HIGHWAY

MTA PROJECT MANAGER: Ralph C. Norwood IV

SUPERSTRUCTURE REPLACEMENT
LITCHFIELD ROAD UNDERPASS

REINFORCING STEEL SCHEDULE

SHEET NUMBER: 51

CONTRACT: 2014.07

Date:12/13/2013

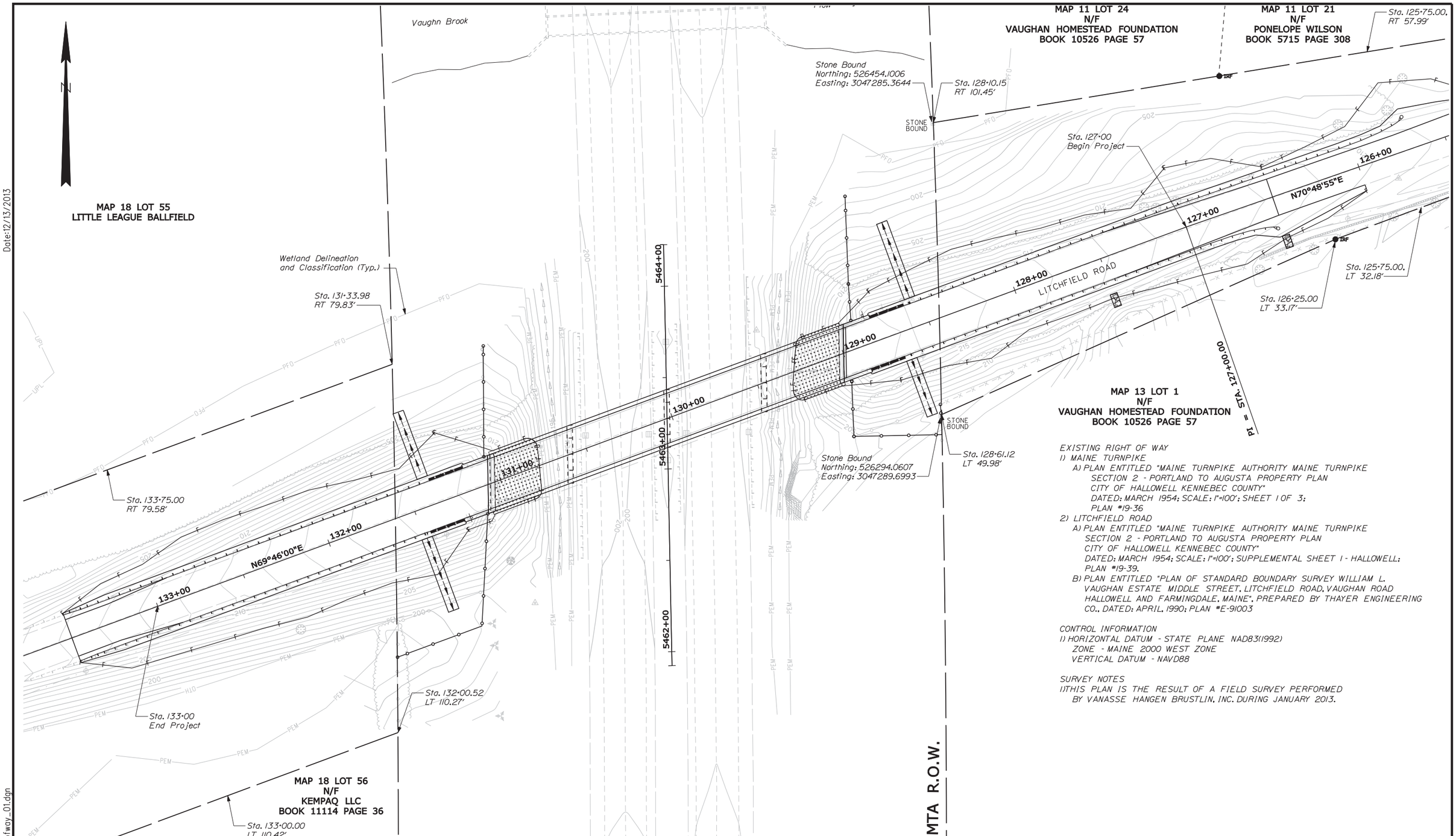

EXISTING RIGHT OF WAY
1) MAINE TURNPIKE
A) PLAN ENTITLED "MAINE TURNPIKE AUTHORITY MAINE TURNPIKE SECTION 2 - PORTLAND TO AUGUSTA PROPERTY PLAN CITY OF HALLOWELL KENNEBEC COUNTY" DATED: MARCH 1954; SCALE: 1"=100'; SHEET 1 OF 3; PLAN #19-36
2) LITCHFIELD ROAD
A) PLAN ENTITLED "MAINE TURNPIKE AUTHORITY MAINE TURNPIKE SECTION 2 - PORTLAND TO AUGUSTA PROPERTY PLAN CITY OF HALLOWELL KENNEBEC COUNTY" DATED: MARCH 1954; SCALE: 1"=100'; SUPPLEMENTAL SHEET 1 - HALLOWELL; PLAN #19-39.
B) PLAN ENTITLED "PLAN OF STANDARD BOUNDARY SURVEY WILLIAM L. VAUGHAN ESTATE MIDDLE STREET, LITCHFIELD ROAD, VAUGHAN ROAD HALLOWELL AND FARMINGDALE, MAINE", PREPARED BY THAYER ENGINEERING CO., DATED: APRIL, 1990; PLAN #E-91003

CONTROL INFORMATION
1) HORIZONTAL DATUM - STATE PLANE NAD83(1992)
ZONE - MAINE 2000 WEST ZONE
VERTICAL DATUM - NAVD88

SURVEY NOTES
1)THIS PLAN IS THE RESULT OF A FIELD SURVEY PERFORMED BY VANASSE HANGEN BRUSTLIN, INC. DURING JANUARY 2013.

Scale: 25 0 25 50
Scale of Feet

No.	Revision	By	Date

Designed by:
Vanasse Hangen Brustlin, Inc.

CONSULTANT PROJECT MANAGER: T. Bryant

	By	Date		By	Date
Designed	KZS	12/13	Checked	SMH	12/13
Drawn	CMD	12/13	In Charge of	TSB	12/13

VANASSE HANGEN BRUSTLIN, INC.
500 Southborough Dr.
Suite 105B
South Portland, ME 04106
TEL (207) 889-3150
FAX (207) 253-5596

MAINE TURNPIKE

THE GOLD STAR MEMORIAL HIGHWAY

MTA PROJECT MANAGER: Ralph C. Norwood IV

SUPERSTRUCTURE REPLACEMENT
LITCHFIELD ROAD UNDERPASS

RIGHT OF WAY MAP

SHEET NUMBER: 52

CONTRACT:2014.07

52 OF 70

Filename: ...\planset\052_rightofway_01.dgn

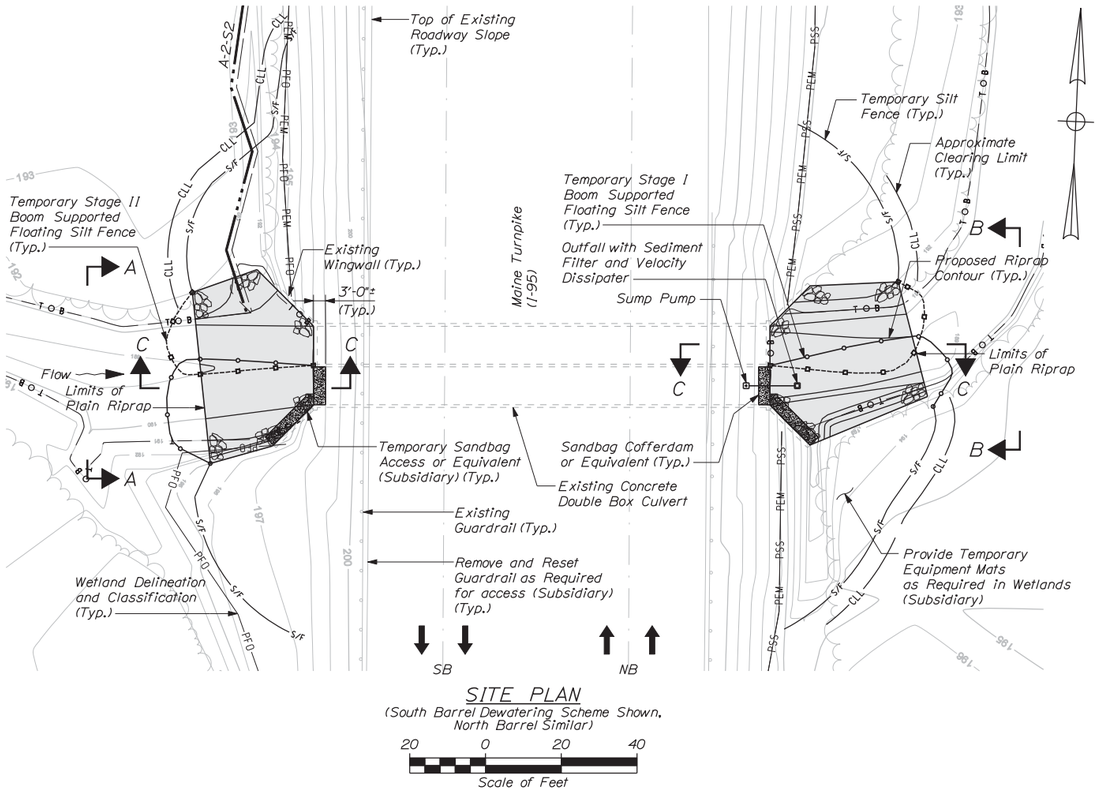

SITE PLAN
(South Barrel Dewatering Scheme Shown, North Barrel Similar)

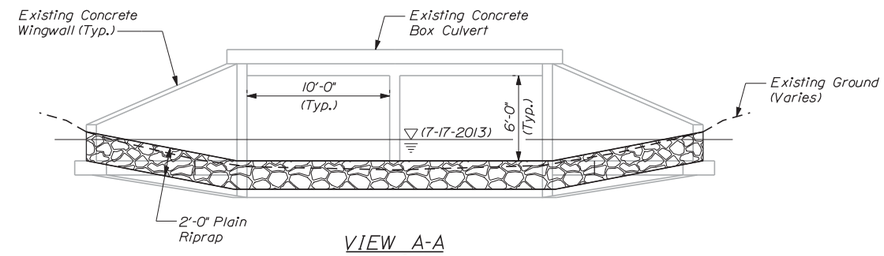

VIEW A-A
Not to Scale

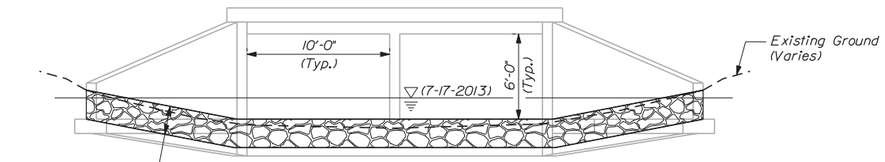

VIEW B-B
Not to Scale

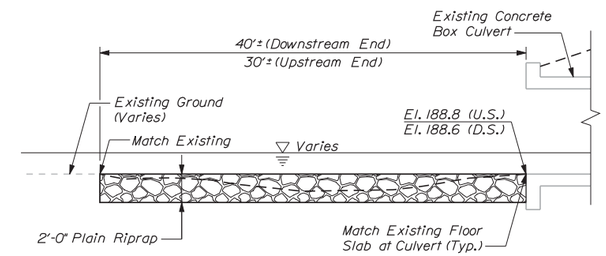

SECTION C-C
Not to Scale

CONSTRUCTION NOTES:

1. All work shall adhere to the latest revision of the MaineDOT Best Management Practices for Erosion and Sediment Control and the Contract Specifications. All work must be completed within the existing Right of Way.
2. Riprap materials and placement shall be in accordance with Standard Specification 610.
3. Earth moving equipment shall not be located or operated in the water course except for bucket attachments and related equipment extensions to excavate, grade, and place riprap as shown.
4. Remove all temporary water diversion structures and turbidity controls from the culvert and water course once all concrete repairs and riprap are complete.
5. Any proposed clearing shall be approved by the Resident prior to the start of work. Only clearing that is required for construction access and riprap placement will be allowed and limits shall not extend beyond that shown. Clearing shall be incidental to the contract.
6. The work shall be conducted to minimize impacts and disturbance to wetlands and the water course. Temporary boom supported silt fence shall be installed to ensure flow is maintained at all times as work is alternated from one side of bank to the other in stages 1 and 2 for concrete repairs and riprap installation.
7. Scour holes and depressions shall be backfilled with suitable channel excavation material prior to placement of riprap. Excess excavation shall be disposed of and stabilized on site in an approved manner to ensure existing drainage is maintained and to control erosion and sedimentation. Excavated material may not be stockpiled or spread without prior approval of the Resident and material shall not be placed in wetland areas.
8. Impact area (including 0.06 acres for permanent riprap) shall not exceed 0.18 acres without prior approval of the permitting agencies and MTA.
9. Install temporary silt fence down grade of disturbed slopes as required. Location may vary from that shown based on construction access.
10. All reconstructed Turnpike side slopes shall receive four inches of loam and shall be seeded with seeding method 2 in accordance with Standard Specifications 615 and 618. This work shall be incidental to the contract.
11. If guardrail is removed for construction access to perform the work, a single lane closure is required. See Work Zone Plans. At the end of each work day, the contractor is required to have an approved crashworthy end treatment on all guardrail within all work areas accessible to traffic.
12. The Contractor shall submit an access plan to the resident for approval, prior to commencing work. Cost shall be incidental to the contract.

SHEET NOTES:

1. See Sheet 2 for Estimated Quantities for Vaughn Brook Culvert Repair.
2. See General Construction Notes 1, 10, 11, and 13 on Sheet 3.
3. See Vaughn Brook Culvert Repair Sheet 2 of 2 for concrete repairs.
4. See Sheet 69 for Vaughn Brook Culvert as-built plan.

Scale: AS NOTED

No.	Revision	By	Date

Designed by:
Vanasse Hangen Brustlin, Inc.

CONSULTANT PROJECT MANAGER: T. Bryant

	By	Date		By	Date
Designed	KZS	12/13	Checked	SMH	12/13
Drawn	CMD	12/13	In Charge of	TSB	12/13

VANASSE HANGEN BRUSTLIN, INC.
500 Southborough Dr.
Suite 105B
South Portland, ME 04106
TEL (207) 889-3150
FAX (207) 253-5596

MAINE TURNPIKE
THE GOLD STAR MEMORIAL HIGHWAY

MTA PROJECT MANAGER: Ralph C. Norwood IV

SUPERSTRUCTURE REPLACEMENT
LITCHFIELD ROAD UNDERPASS
VAUGHN BROOK CULVERT REPAIR
(1 OF 2)

SHEET NUMBER: 53
CONTRACT: 2014.07
53 OF 70

Date: 12/13/2013
Filename: ...\st\planset\053_Vaughn_01.dgn

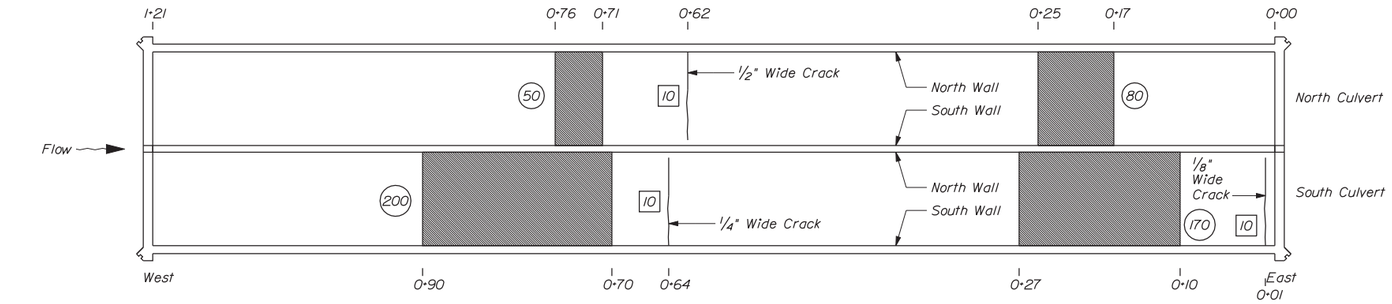

Ceiling, Plan View

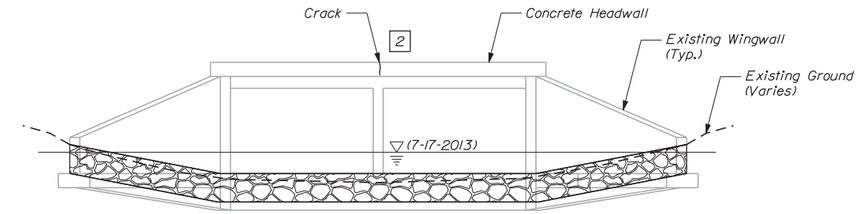

WEST END ELEVATION

Scale: 3/16" = 1'-0"

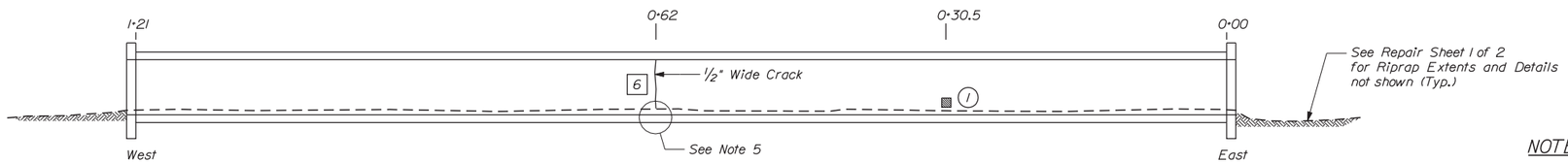

North Culvert, North Wall

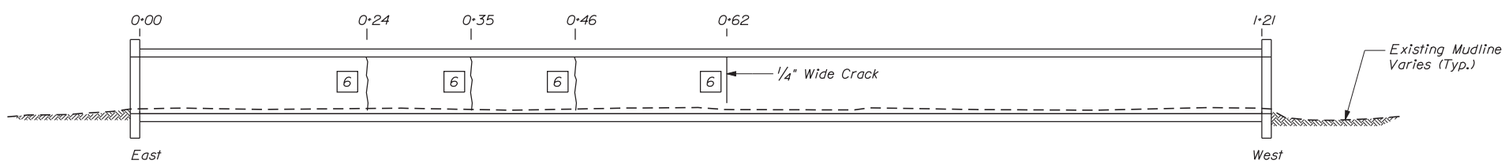

North Culvert, South Wall

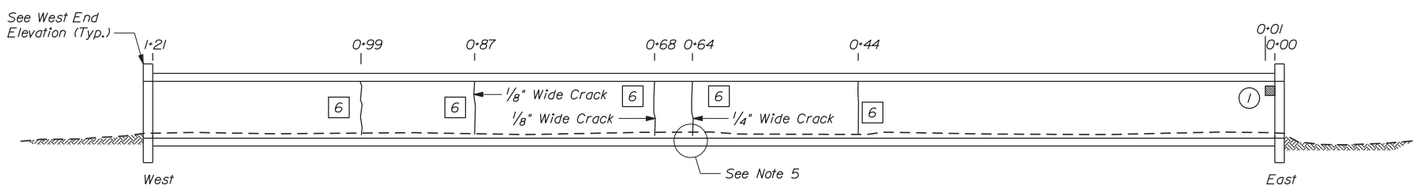

South Culvert, North Wall

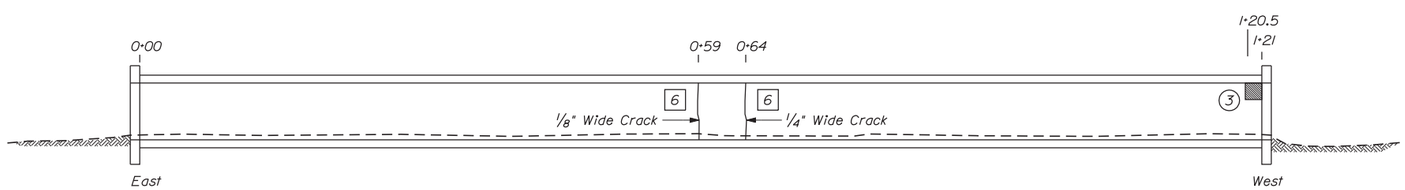

South Culvert, South Wall

ESTIMATED REPAIR QUANTITIES

Culvert Surface Patch - Above Water = 515 SF
Epoxy Injection Crack Repair - Above Water = 114 LF

NOTES:

1. Required repairs based on inspection drawings completed by Childs Engineering dated October 18, 2011.
2. All repairs shall be completed "in the dry" by an individual qualified and experienced in the type of repair.
3. Crack widths of 0.06 inches or greater shall be repaired in accordance with Special Provision 518.
4. The Contractor shall provide for and maintain access for the Resident. Cost shall be incidental to the contract.
5. Contractor shall hand excavate and clean a 5' wide section of channel bottom (from wall to wall in each barrel) centered under the cracks shown to allow the Resident to inspect the condition of the bottom slab. Channel bed shall be regraded at this location once any repairs are completed and cured. All costs shall be incidental to the other contract items.
6. See Sheet 24 for Typical Concrete Surface Repair Detail and related notes.
7. Estimated repair quantities include 10 additional square feet for patching as a contingency and 10 additional linear feet of crack repair as a contingency.
8. All exposed portions of culvert headwalls and wingwalls above water shall be coated with clear protective coating after all repair work is complete and cured.
9. See Repair Sheet 1 of 2 for conceptual dewatering scheme for each culvert barrel.
10. See Repair Sheet 1 of 2 for Construction Notes and other sheet notes.

LEGEND:

- Limit of Crack Repair
- Limit of Surface Patch Repair
- Linear Feet of Crack Repair
- Square Footage of Repair
- Approximate Mudline Adjacent to Structure

VAUGHN BROOK DOUBLE BOX CULVERT CONCRETE REPAIRS

(For Detailing and Location Purposes, the Turnpike Orientation is N-S and the Brook is W-E)
Scale: 1/8" = 1'-0"

Scale: AS NOTED

No.	Revision	By	Date

Designed by:

Vanasse Hangen Brustlin, Inc.

CONSULTANT PROJECT MANAGER: T. Bryant

	By	Date		By	Date
Designed	KZS	12/13	Checked	SMH	12/13
Drawn	CMD	12/13	In Charge of	TSB	12/13

VANASSE HANGEN BRUSTLIN, INC.
500 Southborough Dr.
Suite 105B
South Portland, ME 04106
TEL (207) 889-3150
FAX (207) 253-5596

MAINE TURNPIKE

THE GOLD STAR MEMORIAL HIGHWAY

MTA PROJECT MANAGER: Ralph C. Norwood IV

SUPERSTRUCTURE REPLACEMENT
LITCHFIELD ROAD UNDERPASS
VAUGHN BROOK CULVERT REPAIR
(2 OF 2)

SHEET NUMBER: 54

CONTRACT:2014.07

Date:12/13/2013
Filename: ...\st\planset\054_Vaughn_03.dgn

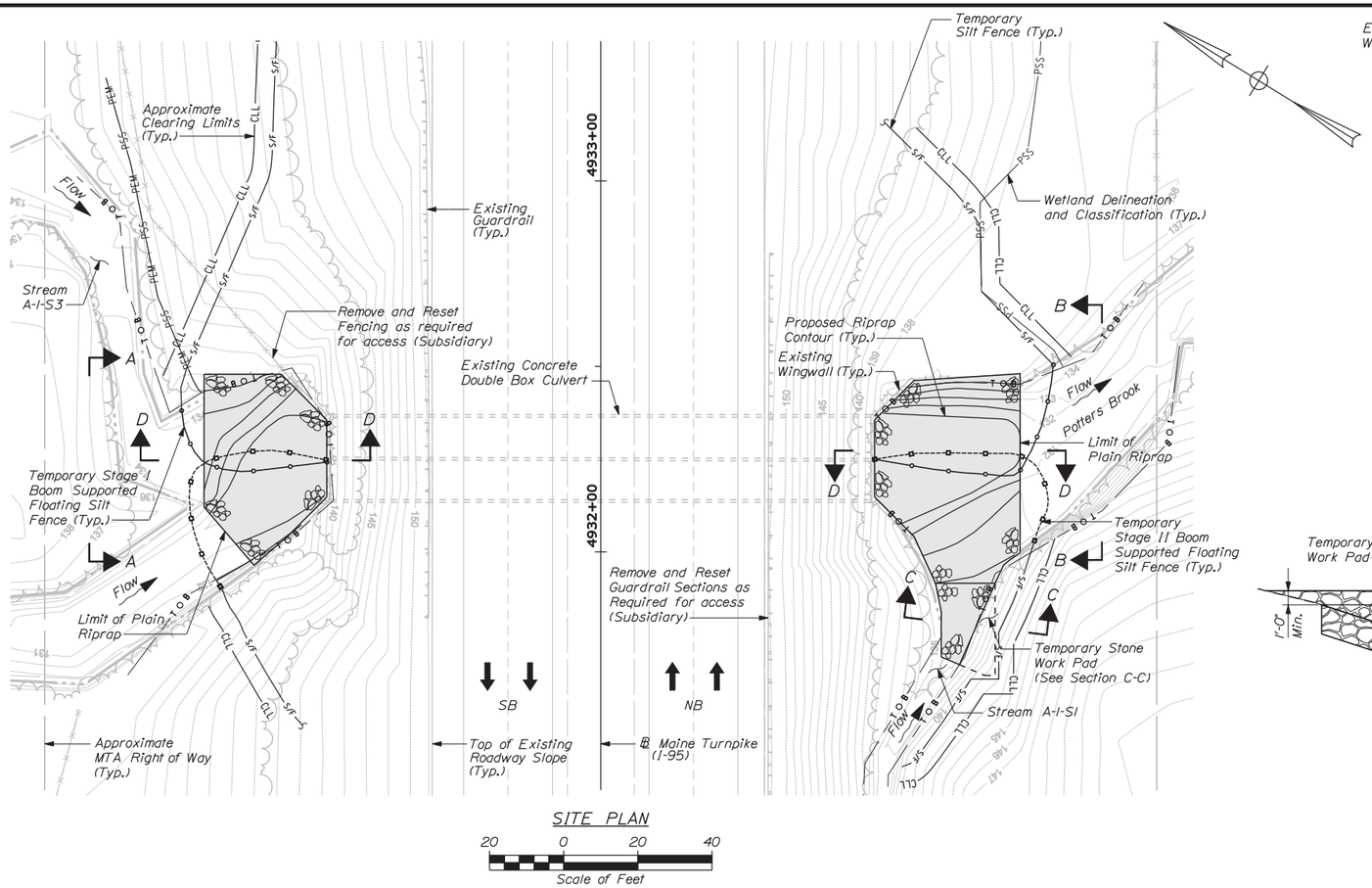

SITE PLAN

20 0 20 40

Scale of Feet

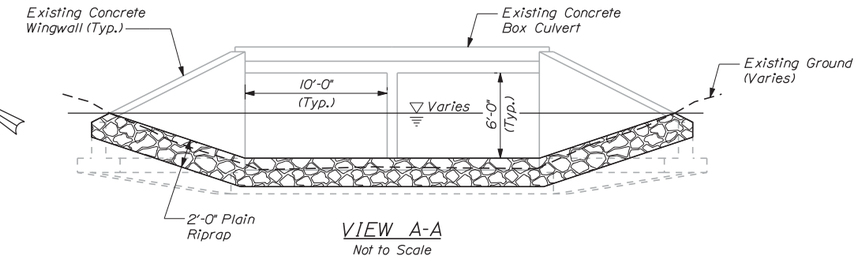

VIEW A-A

Not to Scale

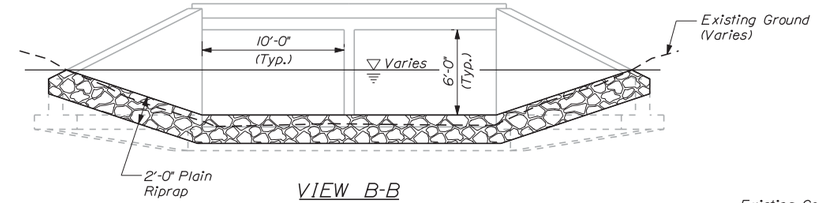

VIEW B-B

Not to Scale

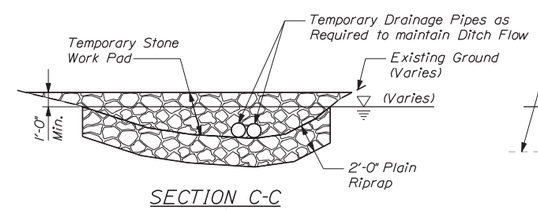

SECTION C-C

Not to Scale

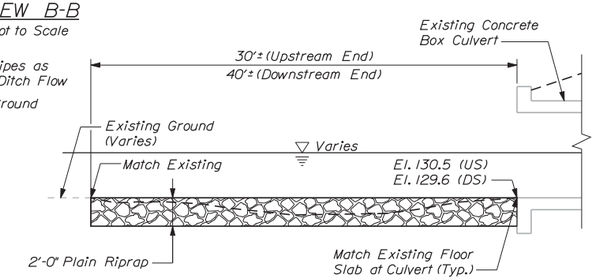

SECTION D-D

Not to Scale

CONSTRUCTION NOTES:

1. All work shall adhere to the latest revision of the MaineDOT Best Management Practices for Erosion and Sediment Control and the Contract Specifications. All work must be completed within the existing Right of Way.
2. Riprap materials and placement shall be in accordance with Standard Specification 610.
3. Earth moving equipment shall not be located or operated in the water course except for bucket attachments and related equipment extensions to excavate, grade, and place riprap as shown.
4. Remove temporary work pad and temporary drainage pipes once riprap is complete and in place. All materials, installation, and removal of temporary stone work pad shall be incidental to the contract.
5. Any proposed clearing shall be approved by the Resident prior to the start of work. Only clearing that is required for construction access and riprap placement will be allowed and limits shall not extend beyond that shown. Clearing shall be incidental to the contract.
6. The work shall be conducted to minimize impacts and disturbance to wetlands and the water course. Temporary boom supported silt fence shall be installed to ensure flow is maintained at all times as work is alternated from one side of bank to the other in stages 1 and 2 for concrete repairs and riprap installation.
7. Scour holes and depressions shall be backfilled with suitable channel excavation material prior to placement of riprap. Excess excavation shall be disposed of and stabilized on site in an approved manner to ensure existing drainage is maintained and to control erosion and sedimentation. Excavated material may not be stockpiled or spread without prior approval of the Resident and material shall not be placed in wetland areas.
8. Impact area (including 0.08 acres for permanent riprap) shall not exceed 0.28 acres without prior approval of the permitting agencies and MTA.
9. Install temporary silt fence down grade of disturbed slopes as required. Location may vary from that shown based on construction access.
10. All reconstructed Turnpike side slopes shall receive four inches of loam and shall be seeded with seeding method 2 in accordance with Standard Specifications 615 and 618. This work shall be incidental to the contract.
11. If guardrail is removed for construction access to perform the work, a single lane closure is required. See Work Zone Plans. At the end of each work day, the contractor is required to have an approved crashworthy end treatment on all guardrail within all work areas accessible to traffic.
12. The Contractor shall submit an access plan to the resident for approval, prior to commencing work. Cost shall be incidental to the contract.

SHEET NOTES:

1. See Sheet 2 for Estimated Quantities for Potters Brook Culvert Repair.
2. See General Construction Notes 1, 10, 11, and 13 on Sheet 3.
3. See Potters Brook Culvert Repair Sheet 2 of 2 for concrete repairs.
4. See Sheet 70 for Potters Brook Culvert as-built plan.

Date:12/13/2013

Filename: ...\st\planset\055_Potters_01.dgn

Scale: AS NOTED

No.	Revision	By	Date

Designed by:

Vanasse Hangen Brustlin, Inc.

CONSULTANT PROJECT MANAGER: T. Bryant

	By	Date		By	Date
Designed	KZS	12/13	Checked	SMH	12/13
Drawn	CMD	12/13	In Charge of	TSB	12/13

VANASSE HANGEN BRUSTLIN, INC.
500 Southborough Dr.
Suite 105B
South Portland, ME 04106
TEL (207) 889-3150
FAX (207) 253-5596

MAINE TURNPIKE

THE GOLD STAR MEMORIAL HIGHWAY

MTA PROJECT MANAGER: Ralph C. Norwood IV

SUPERSTRUCTURE REPLACEMENT
LITCHFIELD ROAD UNDERPASS

POTTERS BROOK CULVERT REPAIR
(1 OF 2)

SHEET NUMBER: 55

CONTRACT:2014.07

55 OF 70

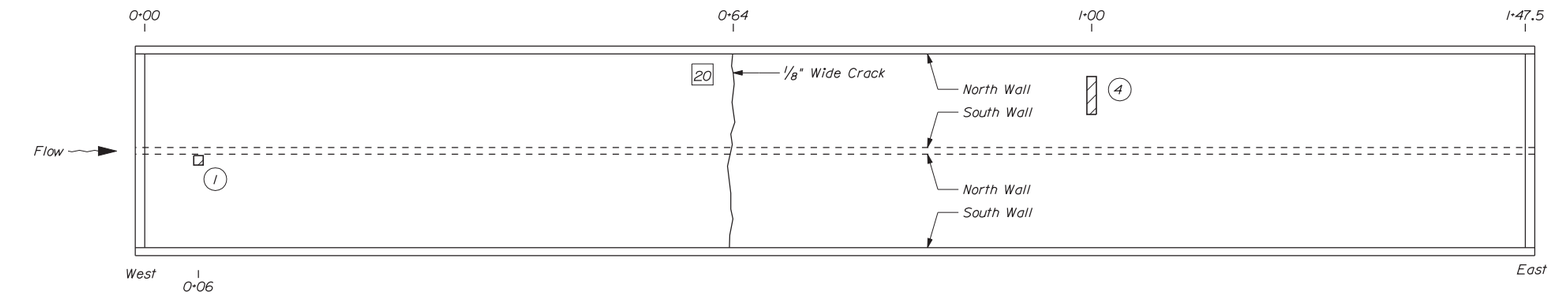

Ceiling, Plan View

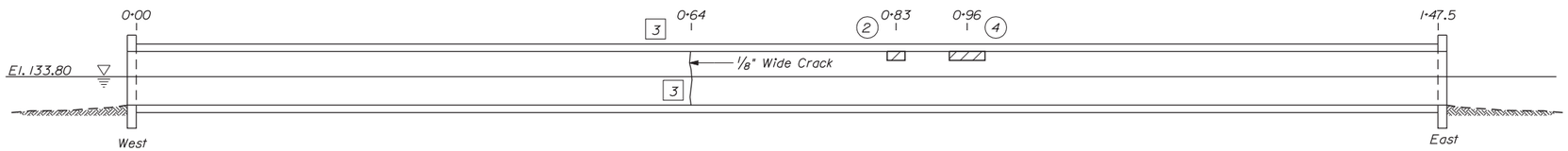

North Culvert, North Wall

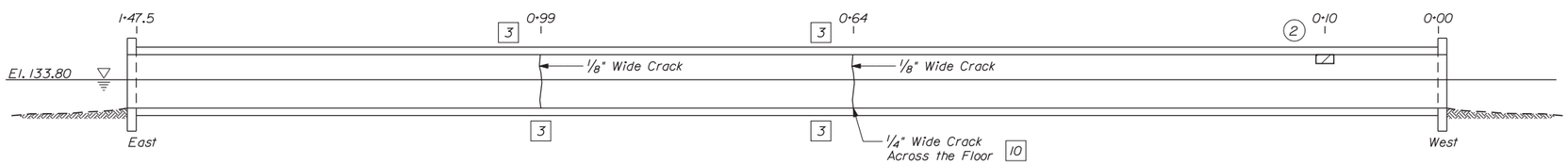

North Culvert, South Wall

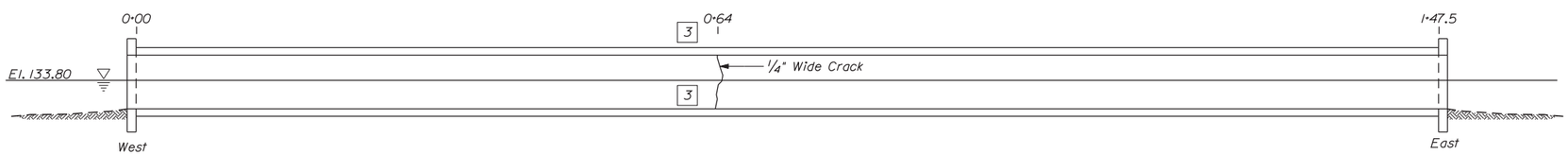

South Culvert, North Wall

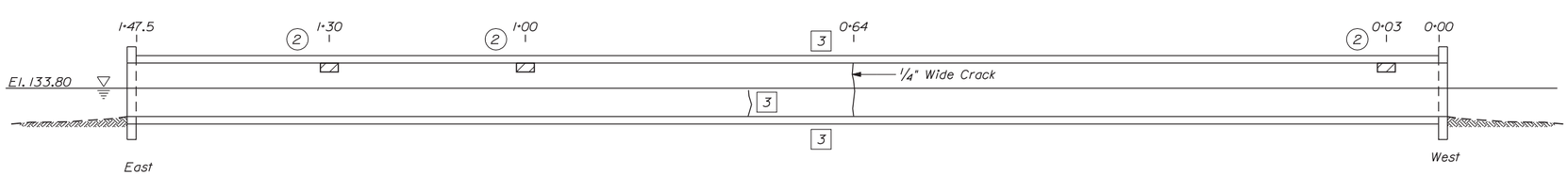

South Culvert, South Wall

VAUGHN BROOK DOUBLE BOX CULVERT CONCRETE REPAIRS

(For Detailing and Location Purposes, the Turnpike Orientation is N-S and the Brook is W-E)
Scale: 1/8" = 1'-0"

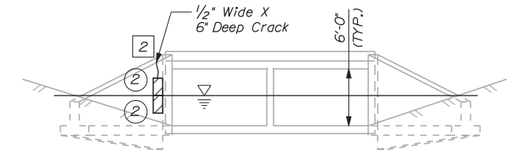

ELEVATION - WEST END
1/8"=1'-0"

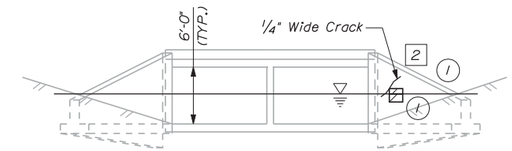

ELEVATION - EAST END
1/8"=1'-0"

ESTIMATED REPAIR QUANTITIES

Culvert Surface Patch - Above Water = 32 SF *
Epoxy Injection Crack Repair - Above Water = 13 LF *
Epoxy Injection Crack Repair - Above Water = 49 LF **
Epoxy Injection Crack Repair - Below Water = 35 LF **
* Includes 10 SF additional Repair Quantity as a Contingency.
** Includes 10 LF additionally Repair Quantity as a Contingency.

NOTES:

1. Required repairs based on inspection drawings completed by Childs Engineering dated October 18, 2011 and plans developed by HNTB dated February 7, 2013.
2. All repairs shall be completed by an individual qualified and experienced in the type of repair.
3. Crack widths of 0.12 inches or greater shall be repaired in accordance with Special Provision 518. Work shall be paid under Item 518.41, Epoxy Injection Crack Repair - Above Water and Item 518.42, Epoxy Injection Crack Repair - Below Water.
4. The Contractor shall provide for and maintain access for inspection. Cost shall be incidental to the contract.
5. Where surface repairs are specified the work shall include removal of unsound concrete and placement and curing of repair materials. Repairs shall be measured for payment under pay Item 518.15, Culvert Surface Patch Repairs - Above Water and pay Item 518.16, Culvert Surface Patch Repairs - Below Water.
6. See Sheet 24 for Typical Concrete Surface Repair Detail and related notes.
7. Repair areas above elevation 133.8 will be measured for payment as above water repair and areas below will be measured for payment as below water (regardless of the actual water elevation at the time of the repair).
8. All exposed portions of culvert headwalls and wingwalls above water shall be coated with clear protective coating after all repair work is complete and cured.
9. See Repair Sheet 1 of 2 for Construction Notes and other sheet notes.

LEGEND:

- Limit of Crack Repair
- Limit of Surface Patch Repair
- # Linear Feet of Crack Repair
- # Square Footage of Repair
- Approximate Mudline Adjacent to Structure

Date:12/13/2013

Filename: ...\st\planset\056_Potters_02.dgn

Scale: AS NOTED

No.	Revision	By	Date

Designed by:

VHB Vanasse Hangen Brustlin, Inc.

CONSULTANT PROJECT MANAGER: T. Bryant

	By	Date		By	Date
Designed	KZS	12/13	Checked	SMH	12/13
Drawn	CMD	12/13	In Charge of	TSB	12/13

VANASSE HANGEN BRUSTLIN, INC.
500 Southborough Dr.
Suite 105B
South Portland, ME 04106
TEL (207) 889-3150
FAX (207) 253-5596

MAINE TURNPIKE

THE GOLD STAR MEMORIAL HIGHWAY

MTA PROJECT MANAGER: Ralph C. Norwood IV

SUPERSTRUCTURE REPLACEMENT
LITCHFIELD ROAD UNDERPASS
POTTERS BROOK CULVERT REPAIR
(2 OF 2)

SHEET NUMBER: 56

CONTRACT:2014.07

56 OF 70

83. 01. 03

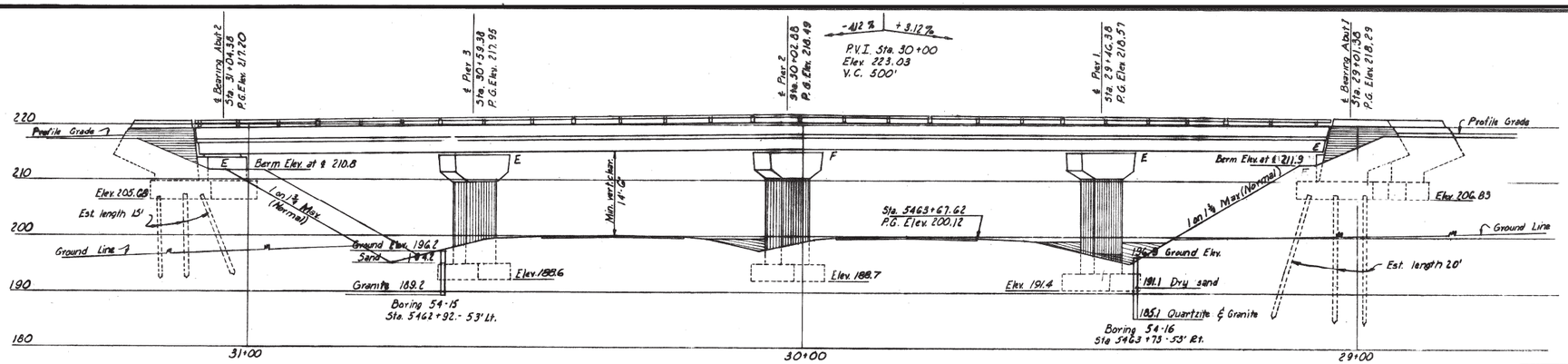

ELEVATION

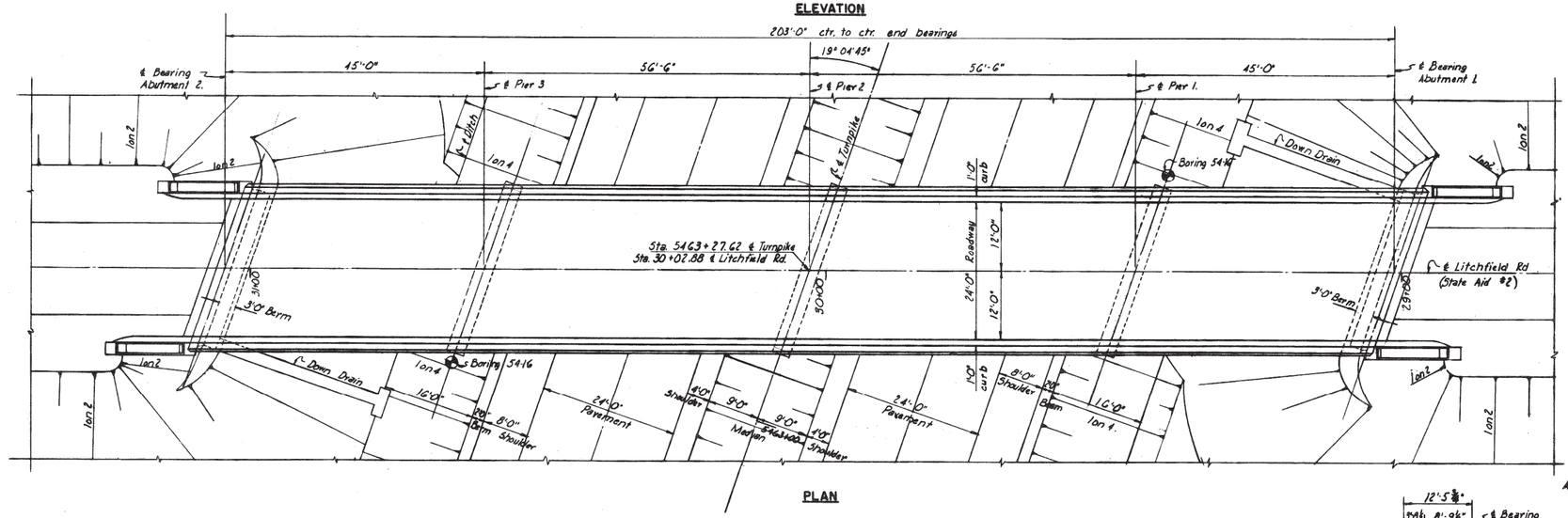

PLAN

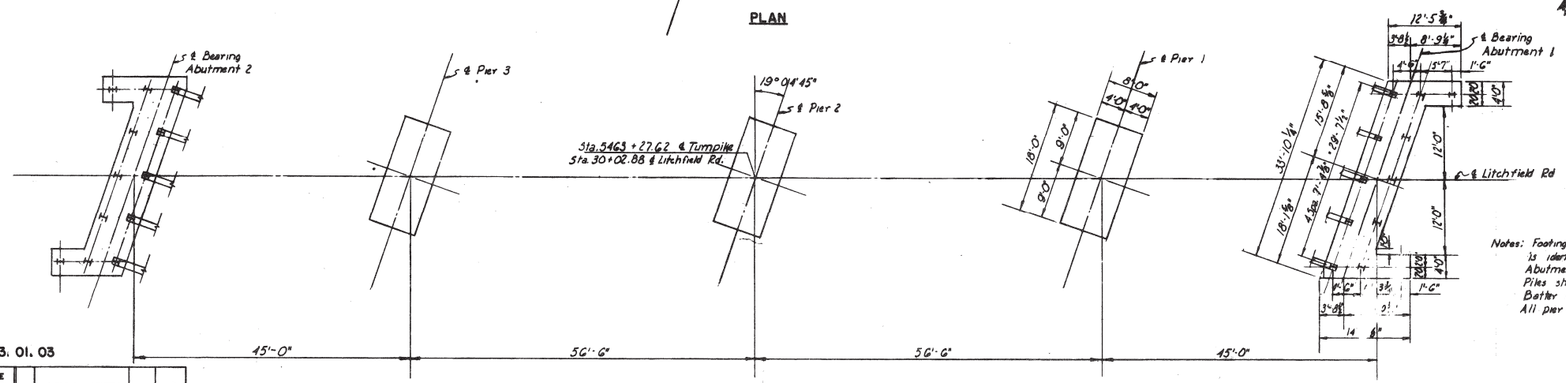

FOOTING PLAN

Notes: Footing for Abutment 2 is identical to that for Abutment 1. by rotation. Piles shall be 10BP42. Batter front row 3:1/ft. All pier footings are identical.

GENERAL NOTES

Design Specifications: AASHO (1953) with minor modifications.
Design Live Loading: H-20
Maximum Pile Loads:
Abutments 1 & 2 = 28 Ton/pile
Maximum Soil Pressure:
Piers 1 & 3 = 4.7 Ton/sq. ft.
Pier 2 = 3.8 Ton/sq. ft.

REFERENCES

Dwg. No.	Title	Substructure Contractor	Superstructure Steel Fabricator	Superstructure Steel Erector	Superstructure Floor Contractor
S.D.-1A	Standard Abutment Details	✓	✓	✓	✓
S.D.-2	Standard Pier Details	✓	✓	✓	
S.D.-3	Abutment Drainage Details	✓			
S.D.-4	Standard Pile Details	✓			
S.D.-5	Standard Handrail, Bearing Devices and Miscellaneous Details	✓	✓	✓	✓
S.D.-6	Standard Diaphragm Details		✓	✓	✓
S.D.-9	Standard Type "A" Splices for 30"WF Beams		✓	✓	
S.D.-12A	Type "2" Expansion Joint	✓	✓	✓	✓
S.D.-18	Standard Bridge Floor Cross Section 24'-0" & 22'-0" Roadway with Bituminous Wearing Surface	✓	✓	✓	✓

VICINITY MAP
Scale: 1" = 1 Mile

MAINE TURNPIKE AUTHORITY
MAINE TURNPIKE
SECTION 2 - PORTLAND TO AUGUSTA
STRUCTURE NO. 83. TURNPIKE UNDER
LITCHFIELD ROAD
STA. 5463 + 27.62
GENERAL PLAN AND ELEVATION
HOWARD, NEEDLES, TAMMEN & BERGENDOFF
CONSULTING ENGINEERS
NEW YORK KANSAS CITY
SCALE: 3/32" = 1'-0"
CONTRACT NO. _____
SHEET NO. 361 OF 382

DRAWING 83. 01. 03

	BY	DATE	No.	REVISION	BY	DATE
MADE	B.K	1-30-59				
TRACED						
CHECKED	H.J.G.	5-12-59	1	As-Built	HBN	1-23-56
CHARGE OF	JDSK					

Date:12/13/2013

Filename: ...\st\planset\057_asbuilt_01.dgn

Scale: NOT TO SCALE

No.	Revision	By	Date

Designed by:
VHB Vanasse Hangen Brustlin, Inc.

CONSULTANT PROJECT MANAGER: T. Bryant

	By	Date		By	Date
Designed	KZS	12/13	Checked	SMH	12/13
Drawn	CMD	12/13	In Charge of	TSB	12/13

VANASSE HANGEN BRUSTLIN, INC.
500 Southborough Dr.
Suite 105B
South Portland, ME 04106
TEL (207) 889-3150
FAX (207) 253-5596

MAINE TURNPIKE
THE GOLD STAR MEMORIAL HIGHWAY
MTA PROJECT MANAGER: Ralph C. Norwood IV

SUPERSTRUCTURE REPLACEMENT
LITCHFIELD ROAD UNDERPASS

AS-BUILTS AND STANDARD DETAILS

SHEET NUMBER: 57
CONTRACT: 2014.07
57 OF 70

83. 02. 03

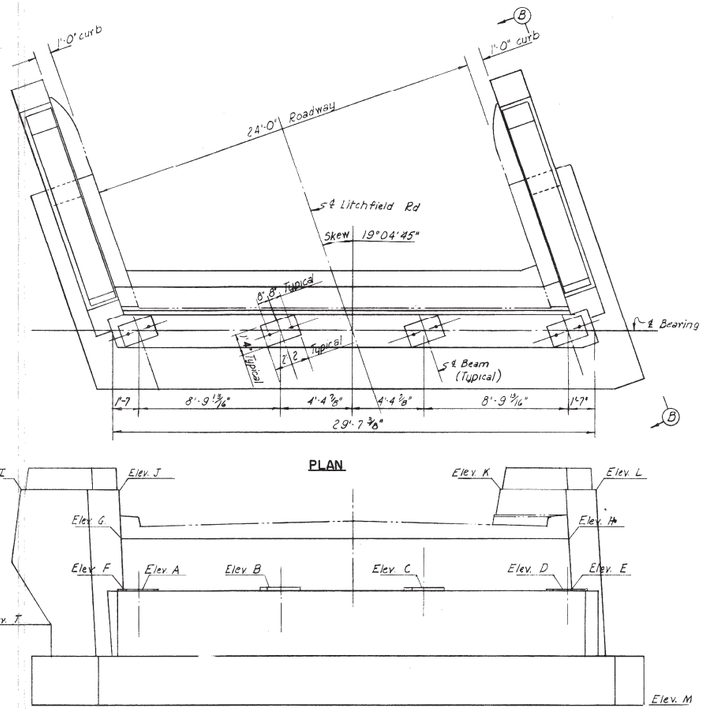

PLAN

ELEVATION

ELEVATIONS		
	Abut. 1	Abut. 2
A	213.99	212.85
B	214.13	213.01
C	214.16	213.07
D	214.08	213.02
E	214.00	212.94
F	213.91	212.77
G	217.32	216.15
H	217.40	216.34
I	220.10	218.80
J	220.23	219.06
K	220.20	219.00
L	220.31	219.24
M	206.83	205.68
T	211.85	210.55
U	211.95	210.75

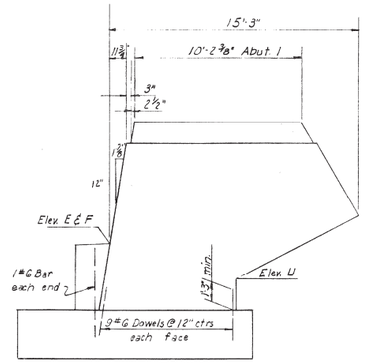

END ELEVATION B-B

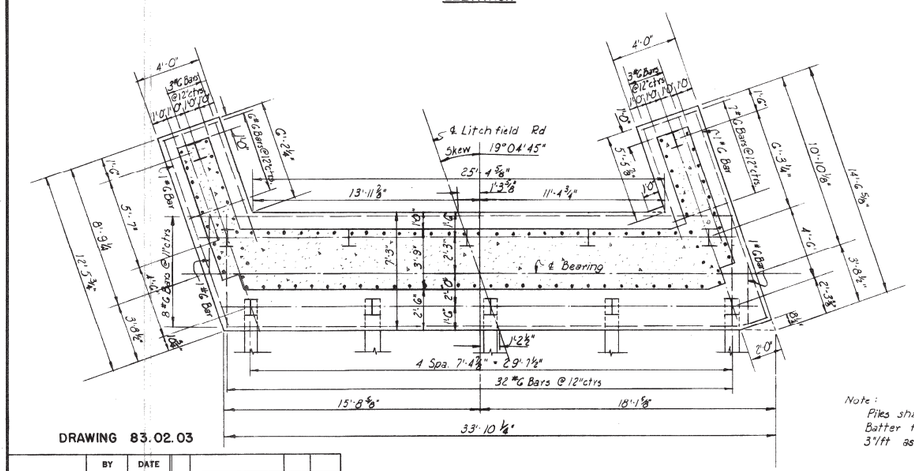

FOOTING PLAN

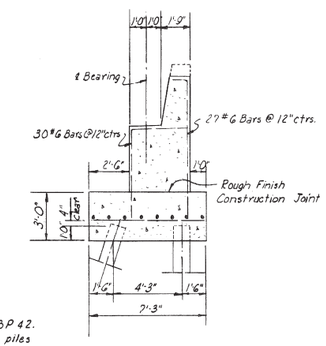

SECTION A-A

Note:
Piles shall be 10BP42.
Batter front row piles 3'1ft as shown

ABUTMENTS

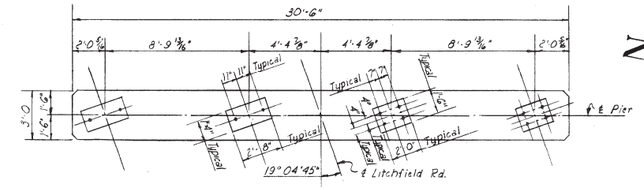

HALF PLAN PIERS 1 & 3 HALF PLAN PIER 2

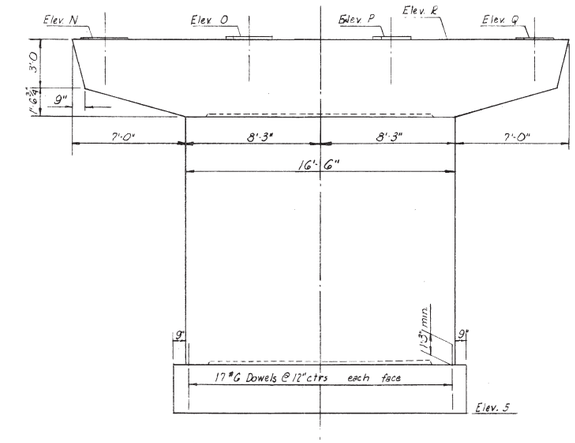

ELEVATION

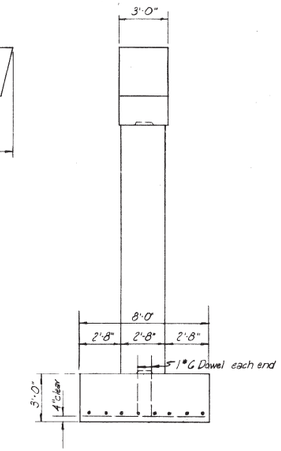

END ELEVATION

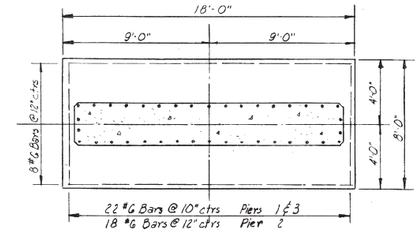

FOOTING PLAN

ELEVATIONS			
	Pier 1	Pier 2	Pier 3
N	213.97	214.21	213.43
O	214.07	214.28	213.48
P	214.07	214.27	213.44
Q	214.00	214.17	213.31
R	213.95	214.15	213.29
S	191.4	188.7	188.6

Note:
Pier footings shall be lowered as necessary to provide a minimum penetration of 6" into solid undisturbed rock.

PIERS

DRAWING 83.02.03

	BY	DATE				
MADE	BK	5-4-54				
TRACED						
CHECKED	HJG	5-12-54	1	As-Built	11-14	12-13-56
IN CHARGE OF	IDSK		No.	REVISION	BY	DATE

MAINE TURNPIKE AUTHORITY
MAINE TURNPIKE
SECTION 2 - PORTLAND TO AUGUSTA

STRUCTURE NO. 83. TURNPIKE UNDER
LITCHFIELD ROAD
STA. 5463 + 27.62
ABUTMENTS AND PIERS

HOWARD, NEEDLES, TAMMEN & BERGENDOFF
CONSULTING ENGINEERS
NEW YORK KANSAS CITY

SCALE: 1/4" = 1'-0"
CONTRACT NO. _____
SHEET NO. 362 OF 382

Date:12/13/2013

Filename: ...\st\planset\058_asbuilt_02.dgn

Scale: NOT TO SCALE

No.	Revision	By	Date

Designed by:
Vanasse Hangen Brustlin, Inc.

CONSULTANT PROJECT MANAGER: T. Bryant

	By	Date		By	Date
Designed	KZS	12/13	Checked	SMH	12/13
Drawn	CMD	12/13	In Charge of	TSB	12/13

VANASSE HANGEN BRUSTLIN, INC.
500 Southborough Dr.
Suite 105B
South Portland, ME 04106
TEL (207) 889-3150
FAX (207) 253-5596

MAINE TURNPIKE

THE GOLD STAR MEMORIAL HIGHWAY

MTA PROJECT MANAGER: Ralph C. Norwood IV

SUPERSTRUCTURE REPLACEMENT
LITCHFIELD ROAD UNDERPASS

AS-BUILTS AND STANDARD DETAILS

SHEET NUMBER: 58

CONTRACT: 2014.07

58 OF 70

83.03.03

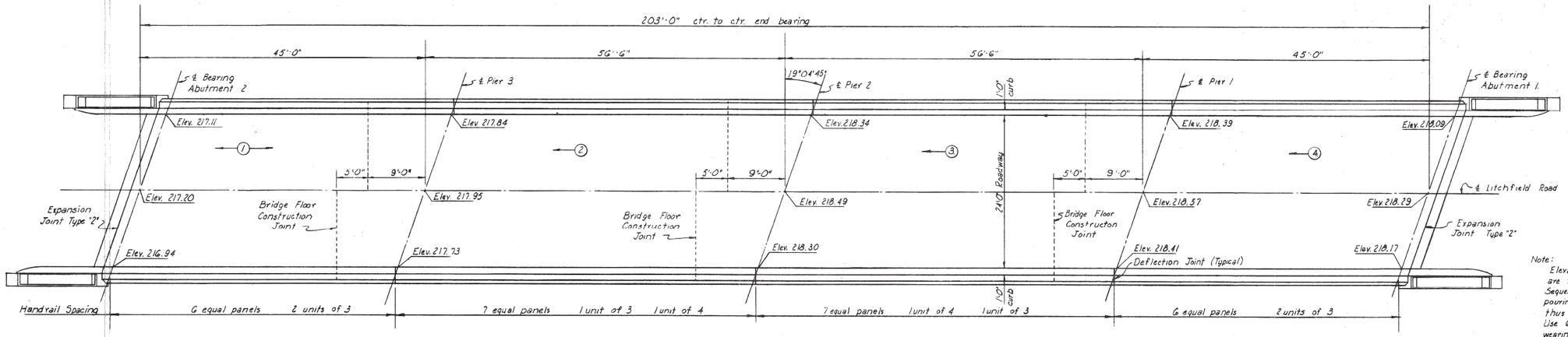

PLAN

Note:
Elevations shown on Plan are to top of finished roadway
Sequence and direction of pouring concrete floor noted thus: —(N)
Use 6½" slab with 2" bituminous wearing surface (non-composite design) as shown on Standard Drawing No. 18.

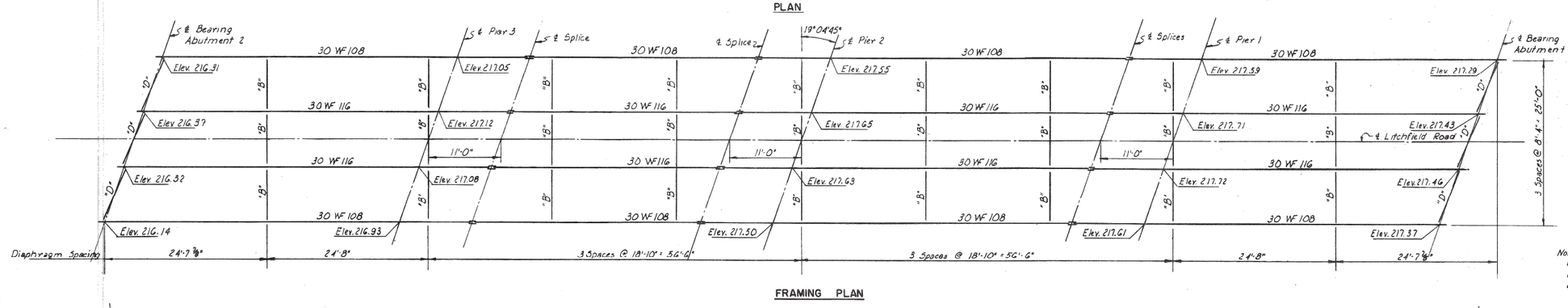

FRAMING PLAN

Note:
Elevations shown are to top of beam flanges.
Diaphragms are noted thus: "B", "D"

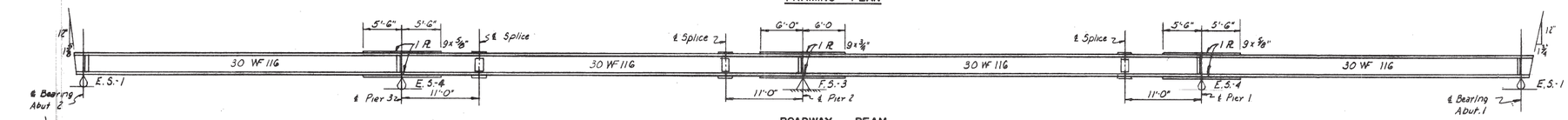

ROADWAY BEAM

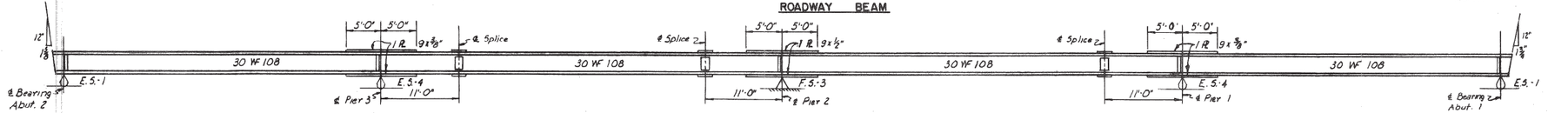

CURB BEAM

Note:
All bearing stiffeners at points of support are 2-7x4x⅝ angles. Bevels at beam ends are with respect to beam axis.

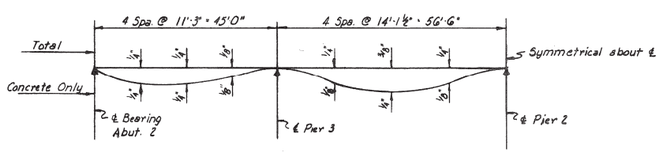

ROADWAY BEAM

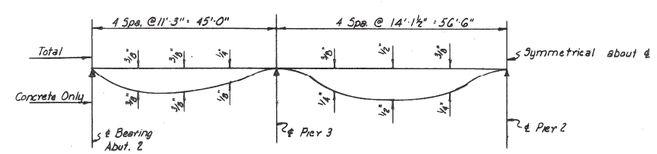

CURB BEAM

DEAD LOAD DEFLECTION DIAGRAMS
No Scale

DRAWING 83.03.03

	BY	DATE				
MADE	BK	5-5-54				
TRACED						
CHECKED	H.J.G.	5-10-54	1	As-Built	HBH	12-3-56
IN CHARGE OF	DSK		No.	REVISION	BY	DATE

MAINE TURNPIKE AUTHORITY
MAINE TURNPIKE
SECTION 2 - PORTLAND TO AUGUSTA
STRUCTURE NO. 83 TURNPIKE UNDER
LITCHFIELD ROAD
STA. 5463 + 27.62
SUPERSTRUCTURE
HOWARD, NEEDLES, TAMMEN & BERGENDOFF
CONSULTING ENGINEERS
NEW YORK KANSAS CITY
SCALE: ⅛" = 1'-0"
CONTRACT NO.
SHEET NO. 363 OF 389

Scale: NOT TO SCALE

No.	Revision	By	Date

Designed by:
VHB Vanasse Hangen Brustlin, Inc.

CONSULTANT PROJECT MANAGER: T. Bryant

	By	Date		By	Date
Designed	KZS	12/13	Checked	SMH	12/13
Drawn	CMD	12/13	In Charge of	TSB	12/13

VANASSE HANGEN BRUSTLIN, INC.
500 Southborough Dr.
Suite 105B
South Portland, ME 04106
TEL (207) 889-3150
FAX (207) 253-5596

MAINE TURNPIKE
THE GOLD STAR MEMORIAL HIGHWAY

MTA PROJECT MANAGER: Ralph C. Norwood IV

SUPERSTRUCTURE REPLACEMENT
LITCHFIELD ROAD UNDERPASS

AS-BUILTS AND STANDARD DETAILS

SHEET NUMBER: 59

CONTRACT: 2014.07

59 OF 70

Date: 12/13/2013

Filename: ...\st\planset\059_asbuilt_03.dgn

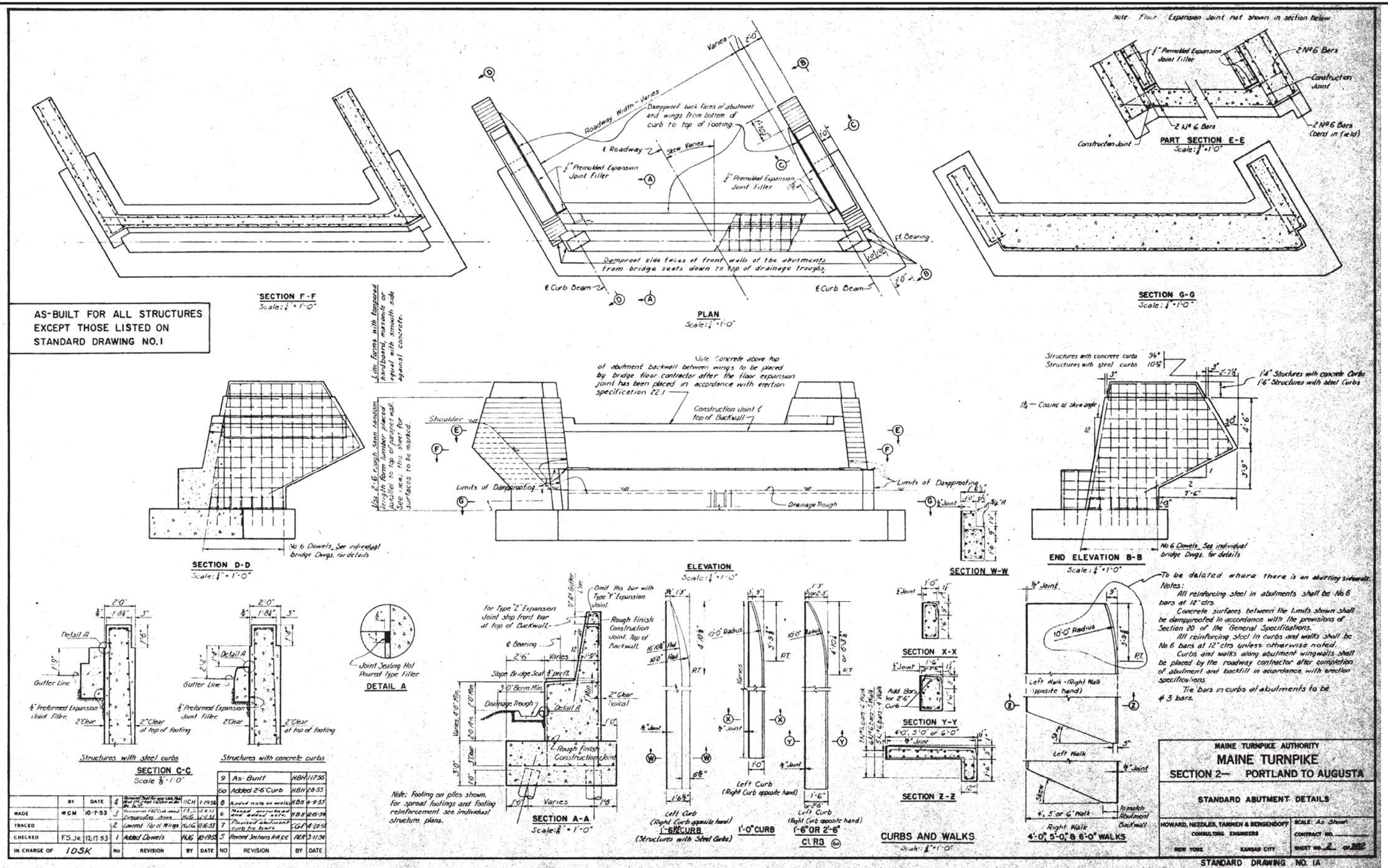

	BY	DATE
MADE	WGM	10-7-53
TRACED		
CHECKED	F.S.Jr.	12-17-53
IN CHARGE OF	IDSK	

No	REVISION	BY	DATE
4	Revised Seat for spans 3 & 4, Revised Ctr. of Seat 1/2" Closer to Ctr. of Bearing	HCH	1-19-54
3	Revised F&G Curb and Dimensions, Stone	FS	12-8-53
2	Lowered Top of Wings	HJG	11-18-53
1	Added Dowels	HJG	10-19-53

No	REVISION	BY	DATE
9	As-Built	HBH	11-7-56
6a	Added 2'-6" Curb	HBH	2-8-55
8	Added note on walks	HBH	6-9-55
6	Revised dampproofing and added walks	HBH	12-15-54
7	Revised abutment curb tie bars	CGF	4-20-55
5	Revised Sections AA, CC	RLR	3-11-54

Filename: ...\st\planset\060_asbuilt_04.dgn

Date:12/13/2013

Scale: NOT TO SCALE

No.	Revision	By	Date

Designed by:

VHB Vanasse Hangen Brustlin, Inc.

CONSULTANT PROJECT MANAGER: T. Bryant

	By	Date		By	Date
Designed	KZS	12/13	Checked	SMH	12/13
Drawn	CMD	12/13	In Charge of	TSB	12/13

VANASSE HANGEN BRUSTLIN, INC.
500 Southborough Dr.
Suite 105B
South Portland, ME 04106
TEL (207) 889-3150
FAX (207) 253-5596

MAINE TURNPIKE

THE GOLD STAR MEMORIAL HIGHWAY

MTA PROJECT MANAGER: Ralph C. Norwood IV

SUPERSTRUCTURE REPLACEMENT
LITCHFIELD ROAD UNDERPASS

AS-BUILTS AND STANDARD DETAILS

SHEET NUMBER: 60

CONTRACT: 2014.07

60 OF 70

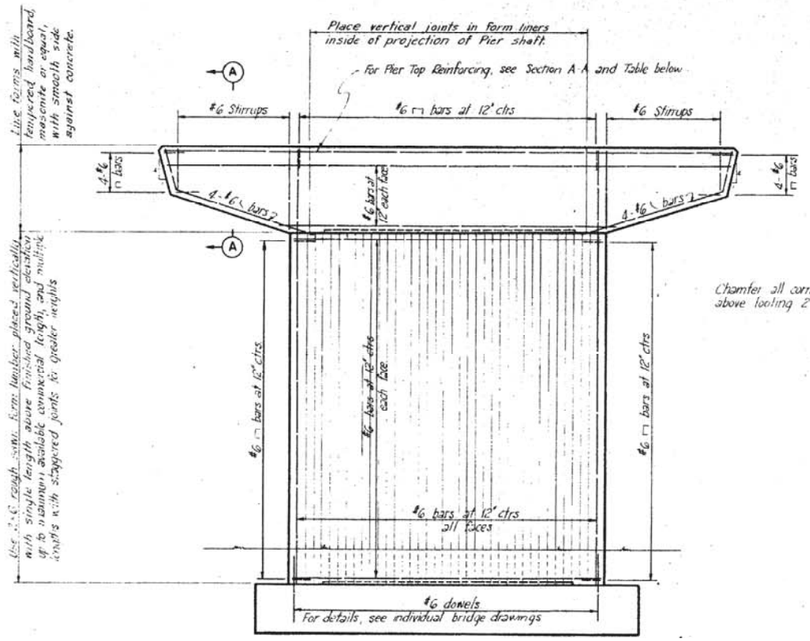

ELEVATION

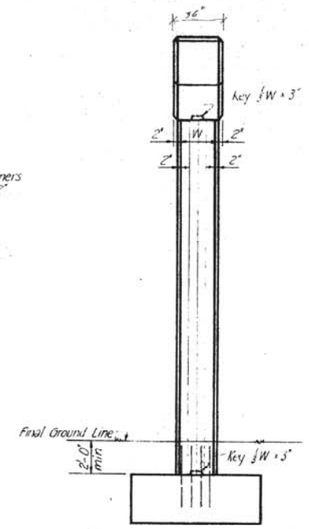

END VIEW

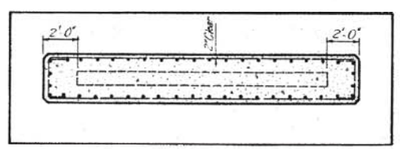

FOOTING PLAN

For Footing Reinforcing see individual bridge drawings

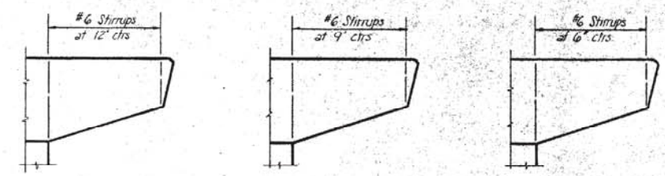

TYPE "M" TYPE "N" TYPE "O"

STIRRUP SPACING

Note
For Pier Top Reinforcing, (per layer) see Table below

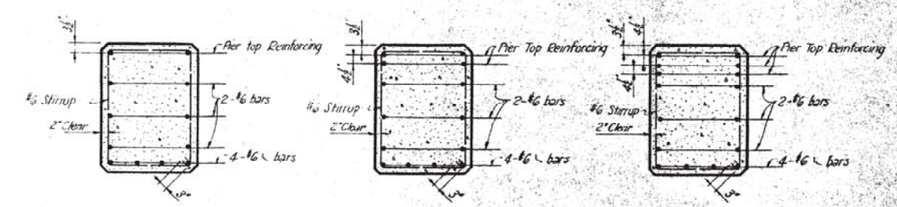

TYPE "A" TYPE "B" TYPE "C"

SECTION A-A

Bridge Number	1	2	3	4	5	6	7	8	9 Pier 1	9 Pier 2&3	11	12 W	12 E	13	14	15	16 W	16 E	17	18	19		21	22	23	24	25	26	27	28	29	30	31		33	34	35			38	39	40	41	42	43	44	45
Type of Section A-A	B	B	B	B	B	C	B	C	B	B	B	B	B	B	B	B	B	B	B	B	B		B	B	B	B	B	B	*	—	B	A	—		B	A	B			B	B	B	C	A	A	A	B
Pier Top Reinforcing - Per Layer	5-#11	7-#11	7-#10	5-#11	4-#11	5-#10	7-#11	6-#10	4-#11	5-#11	5-#11	7-#10	4-#11	5-#11	5-#11	5-#11	5-#11	7-#11	7-#11	6-#11	5-#11		5-#11	4-#10	6-#11	4-#11	4-#11	5-#11	*	—	4-#10	5-#11	—		4-#10	5-#11	4-#10			4-#11	5-#11	4-#10	6-#11	5-#11	5-#9	5-#9	4-#10
Type of Stirrup Spacing	M	M	M	M	M	M	M	O	M	M	M	M	M	M	M	M	M	M	M	M	M		M	M	M	M	M	M	M	—	M	M	—		M	M	M			M	M	M	M	M	M	M	M

Bridge Number	46	47	48	49	50	51	52	53	54	55	56	57 N.B.		58	59	60 Pier 1		61	62	63	64	65	66	67	68	69	70	71	72	73	74	75 Pier 2&3		76	77	78	79	80	81	82	83		85	86	87	88 Pier 1	Pier 2	Pier 3
Type of Section A-A	—	B	B	B	—	B	B	A	B	—	B	B	B	B	B	B	C	A	B	B	B	B	A	B	A	A	B	B	B	B	D	B	A	B	B	C	B	B	—	A	B		B	B	B	C	B	B
Pier Top Reinforcing - Per Layer	—	4-#10	4-#11	4-#10	—	5-#11	4-#10	5-#11	4-#11	—	4-#11	4-#10	5-#11	4-#10	6-#11	5-#11	5-#10	5-#11	4-#10	4-#10	4-#11	4-#11	5-#11	5-#11	5-#9	5-#9	5-#11	4-#11	5-#11	5-#11	6-#11	2-#10 2-#11	6-#10	4-#10	5-#10	4-#11	4-#11	—	5-#11	4-#10		4-#11	4-#11	5-#11	5-#11	7-#11	6-#11
Type of Stirrup Spacing	—	M	M	M	—	M	M	M	M	—	M	M	M	M	M	M	M	M	M	M	M	M	M	M	M	M	M	M	M	M	M	M	M	M	M	M	M	—	M	M		M	M	M	M	M	M

Bridge Number	1A	3A	44A	10-A	69A	56A	58A	58B		
Type of Section A-A	C	B	A	B	A	B	—	B		
Pier Top Reinforcing - Per Layer	5-#10	4-#10	5-#11	5-#10	5-#9	4-#10	—	4-#11		
Type of Stirrup Spacing	M	M	M	M	M	M	—	M		

* Pier top reinforcing shown on Bridge Drawing 27.03.05

	BY	DATE	No.	REVISION	BY	DATE
MADE	TKC	9-22-53	4	As-Built	KBH	11-7-58
TRACED	TKC	10-22-53	3	Bridge 24 Pier Top Reinforcing Per Layer	WCM	4-28-54
CHECKED			2	Bridge 8 Pier Top Reinforcing Per Layer	WCM	4-23-54
IN CHARGE OF	J.D.S.K.		1	Added clear distance of rebars in edge of slab	FEB	3-9-54

MAINE TURNPIKE AUTHORITY
MAINE TURNPIKE
SECTION 2— PORTLAND TO AUGUSTA

STANDARD PIER DETAILS

HOWARD, NEEDLES, TAMMEN & BERGENDOFF
CONSULTING ENGINEERS
NEW YORK KANSAS CITY

SCALE: NO SCALE
CONTRACT NO.
SHEET NO. 8 OF 8

STANDARD DRAWING NO. 2

Date:12/13/2013

Filename: ...\st\planset\061_asbuilt_05.dgn

Scale: NOT TO SCALE

No.	Revision	By	Date

Designed by:

Vanasse Hangen Brustlin, Inc.

CONSULTANT PROJECT MANAGER: T. Bryant

	By	Date		By	Date
Designed	KZS	12/13	Checked	SMH	12/13
Drawn	CMD	12/13	In Charge of	TSB	12/13

VANASSE HANGEN BRUSTLIN, INC.
500 Southborough Dr.
Suite 105B
South Portland, ME 04106
TEL (207) 889-3150
FAX (207) 253-5596

MAINE TURNPIKE

THE GOLD STAR MEMORIAL HIGHWAY

MTA PROJECT MANAGER: Ralph C. Norwood IV

SUPERSTRUCTURE REPLACEMENT
LITCHFIELD ROAD UNDERPASS

AS-BUILTS AND STANDARD DETAILS

SHEET NUMBER: 61

CONTRACT: 2014.07

61 OF 70

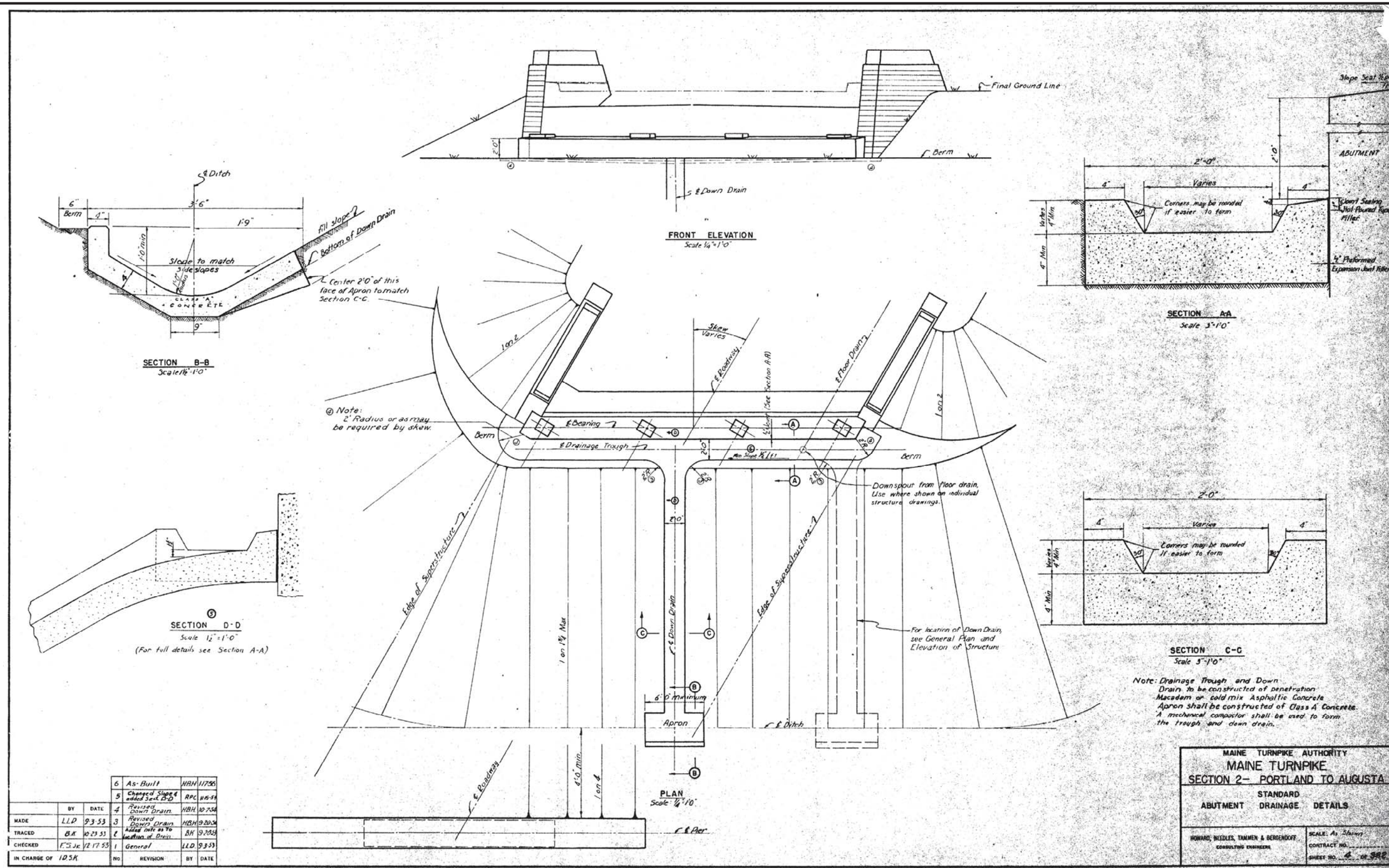

	BY	DATE
MADE	LLD	9-3-53
TRACED	B.K.	10-23-53
CHECKED	F.S.Jr.	12-17-53
IN CHARGE OF	J.D.S.K.	

No	REVISION	BY	DATE
6	As-Built	HBH	11-7-56
5	Changed Slope & added Sect. D-D	RPC	8-15-54
4	Revised Down Drain	HBH	10-7-54
3	Revised Down Drain	HBH	9-20-54
2	Added note as to location of Drain	BH	9-20-54
1	General	LLD	9-3-53

Scale: NOT TO SCALE

No.	Revision	By	Date

Designed by:

VHB Vanasse Hangen Brustlin, Inc.

CONSULTANT PROJECT MANAGER: T. Bryant

	By	Date		By	Date
Designed	KZS	12/13	Checked	SMH	12/13
Drawn	CMD	12/13	In Charge of	TSB	12/13

VANASSE HANGEN BRUSTLIN, INC.
500 Southborough Dr.
Suite 105B
South Portland, ME 04106
TEL (207) 889-3150
FAX (207) 253-5596

MAINE TURNPIKE

THE GOLD STAR MEMORIAL HIGHWAY

MTA PROJECT MANAGER: Ralph C. Norwood IV

SUPERSTRUCTURE REPLACEMENT
LITCHFIELD ROAD UNDERPASS

AS-BUILTS AND STANDARD DETAILS

SHEET NUMBER: 62

CONTRACT: 2014.07

62 OF 70

Date: 12/13/2013

Filename: ...\st\planset\062_asbuilt_06.dgn

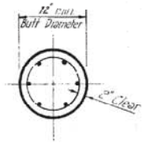

TOP PLAN

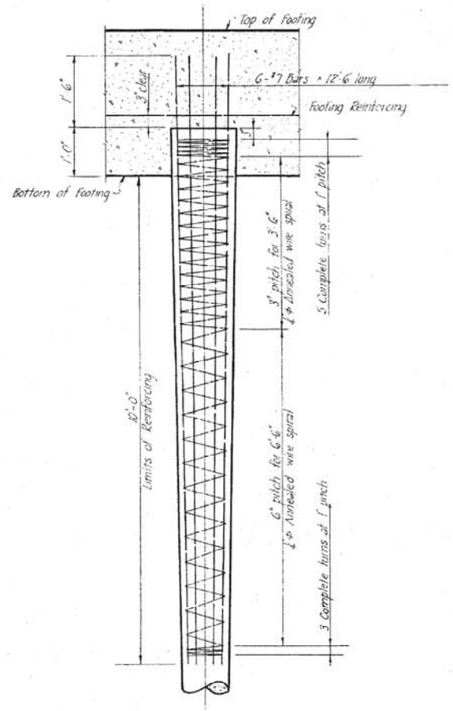

TYPICAL REINFORCING

Piles with shell thickness of 0.12 inch or more shall not be reinforced.

Note: Use backing plates for shell thicknesses of ½" or less. Omit backing plates for shell thicknesses of greater than ½".

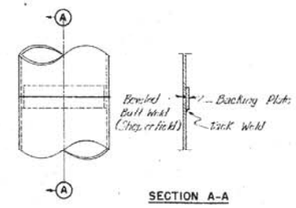

SECTION A-A

CYLINDRICAL SHELL SPLICE

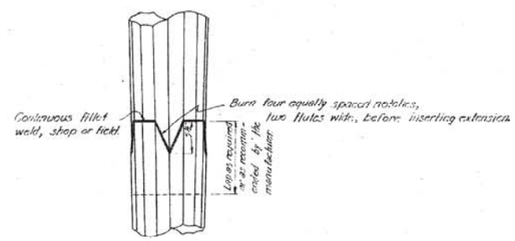

FLUTED SHELL SPLICE

Corrugated pile shells shall be spliced according to the manufacturers recommendations.

CORRUGATED SHELL SPLICE

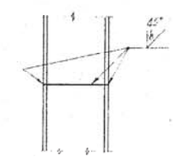

STEEL BEARING PILE SPLICE

CAST-IN-PLACE CONCRETE PILE DETAILS

Cast-in place concrete piles shall be steel shell encased. Shells may be cylindrical, tapered or step-tapered with a 12" minimum butt diameter and an 8" minimum point diameter.

The shell shall be of sufficient thickness and strength so that the shell will hold its original form and show no harmful distortion after it and adjacent shells have been driven and the driving core, if any, has been withdrawn. The design of the shell shall be approved by the Engineer before driving.

IN CHARGE OF			No	REVISION	BY	DATE
	BY	DATE	4	As-Built	HBH	11-7-56
MADE	AEK	10-24-53	3	Added Pile Splices	AEK	3-3-54
TRACED	FKC	10-24-53	2	Changed pile size from 14" to 12" Butt Dia.	AEK	2-19-54
CHECKED	FS Jr.	12-17-53	1	Revised note on shell thickness	AEK	1-13-54

MAINE TURNPIKE AUTHORITY
MAINE TURNPIKE
SECTION 2— PORTLAND TO AUGUSTA

STANDARD PILE DETAILS

HOWARD, NEEDLES, TAMMEN & BERGENDOFF
CONSULTING ENGINEERS
NEW YORK KANSAS CITY

SCALE: No Scale
CONTRACT NO.
SHEET NO. 5 OF 382

STANDARD DRAWING NO. 4

Scale: NOT TO SCALE

No.	Revision	By	Date

Designed by:

Vanasse Hangen Brustlin, Inc.

CONSULTANT PROJECT MANAGER: T. Bryant

	By	Date		By	Date
Designed	KZS	12/13	Checked	SMH	12/13
Drawn	CMD	12/13	In Charge of	TSB	12/13

VANASSE HANGEN BRUSTLIN, INC.
500 Southborough Dr.
Suite 105B
South Portland, ME 04106
TEL (207) 889-3150
FAX (207) 253-5596

MAINE TURNPIKE

THE GOLD STAR MEMORIAL HIGHWAY

MTA PROJECT MANAGER: Ralph C. Norwood IV

SUPERSTRUCTURE REPLACEMENT
LITCHFIELD ROAD UNDERPASS

AS-BUILTS AND STANDARD DETAILS

SHEET NUMBER: 63

CONTRACT: 2014.07

63 OF 70

Date: 12/13/2013

Filename: ...\st\planset\063_asbuilt_07.dgn

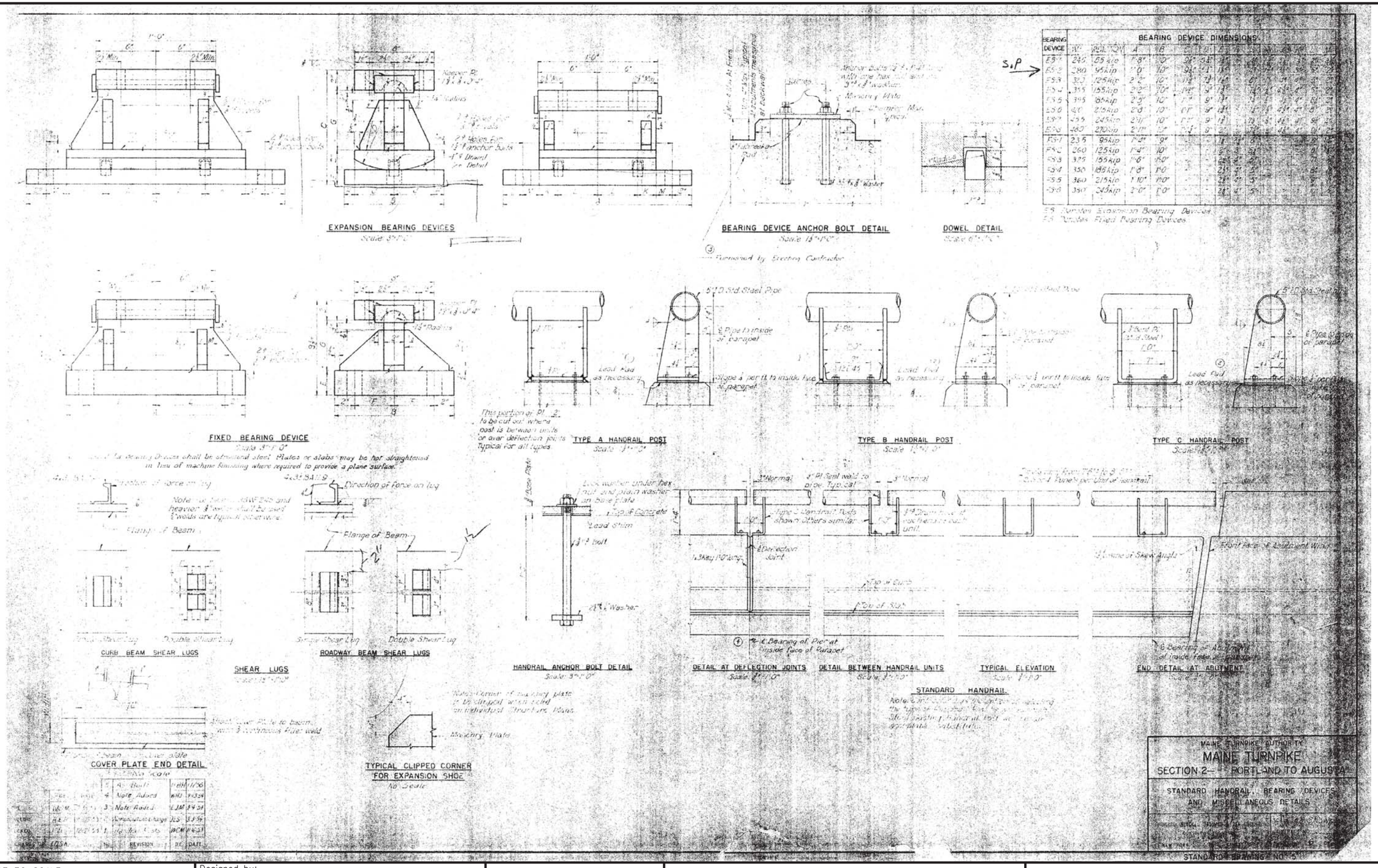

Date:12/13/2013

Filename: ...\st\planset\064_asbuilt_08.dgn

Scale: NOT TO SCALE

No.	Revision	By	Date

Designed by:

VHB Vanasse Hangen Brustlin, Inc.

CONSULTANT PROJECT MANAGER: T. Bryant

	By	Date		By	Date
Designed	KZS	12/13	Checked	SMH	12/13
Drawn	CMD	12/13	In Charge of	TSB	12/13

VANASSE HANGEN BRUSTLIN, INC.
500 Southborough Dr.
Suite 105B
South Portland, ME 04106
TEL (207) 889-3150
FAX (207) 253-5596

MAINE TURNPIKE

THE GOLD STAR MEMORIAL HIGHWAY

MTA PROJECT MANAGER: Ralph C. Norwood IV

SUPERSTRUCTURE REPLACEMENT
LITCHFIELD ROAD UNDERPASS

AS-BUILTS AND STANDARD DETAILS

SHEET NUMBER: 64

CONTRACT: 2014.07

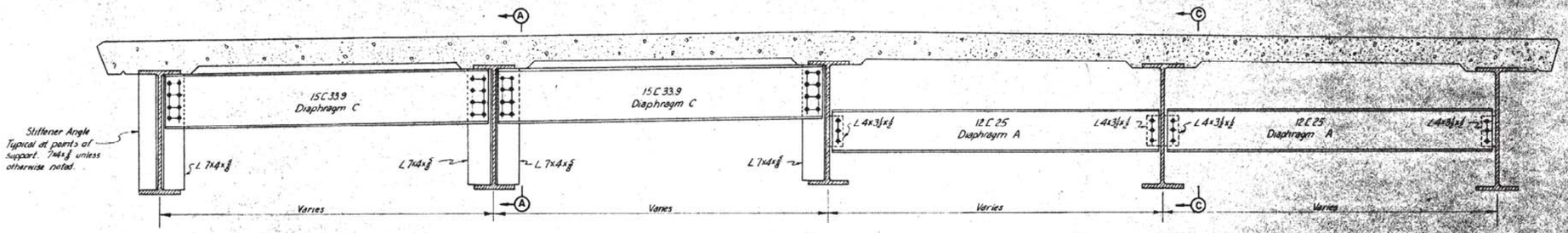

END DIAPHRAGMS OF RECTANGULAR SPANS

INTERIOR DIAPHRAGMS OF RECTANGULAR SPANS

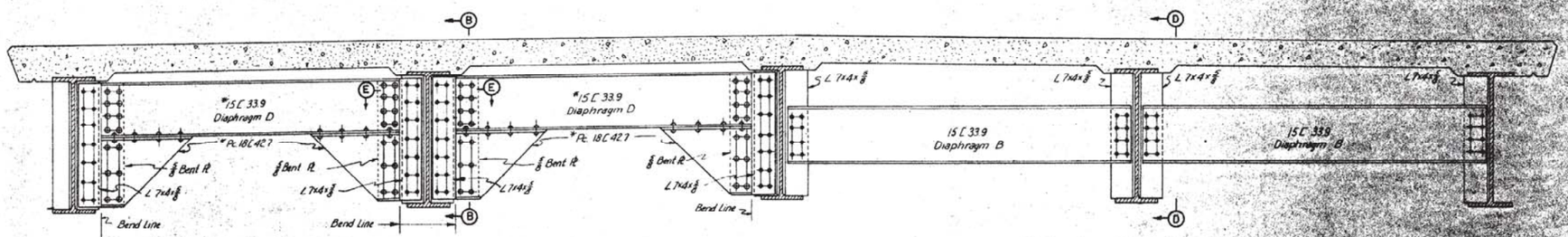

END DIAPHRAGMS OF SKEWED SPANS

INTERIOR DIAPHRAGMS OF SKEWED SPANS
And at points of support of non-skewed spans

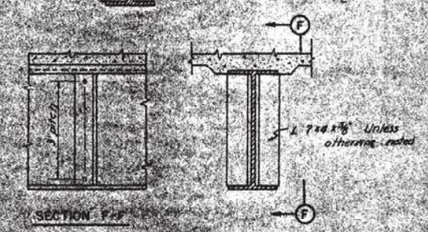

SECTION F-F

Note: Stiffener angles at points of support shall be milled to bear at bottom and tight fit at top. All other angles shall be tight fit.

TYPICAL BEARING STIFFENER
To be used at points of support where diaphragm connections do not exist.

Note: All rivets are ¾" ϕ, holes ⅞" unless noted otherwise.

*Note
The size of diaphragm channels shall increase with the span between beams on the skew, with a corresponding reduction in the size of of knee brace channels as shown in the following table.

SPAN	DIAPHRAGM CHANNEL	KNEE BRACE CHANNEL				
	Beam Size	24 WF	27 WF	30 WF	33 WF	36 WF
0 to 9'-6"	15 C 33.9	omit	10 C 20	12 C 25	15 C 33.9	18 C 42.7
9'-6" to 11'-0"	18 C 42.7	omit	10 C 20	9 C 15	12 C 25	15 C 33.9
11'-0" to 13'-0"	18 C 51.9	omit	10 C 20	9 C 15	12 C 25	15 C 33.9
Over 13'-0"	Special Design					

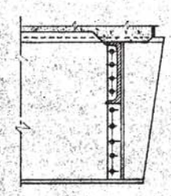

SECTION A-A

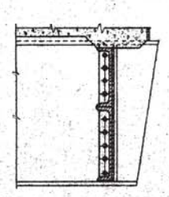

SECTION B-B

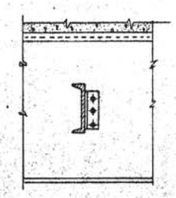

SECTION C-C

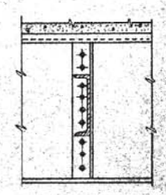

SECTION D-D

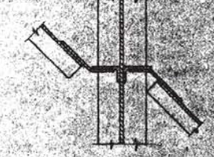

SECTION E-E

	BY	DATE	No	REVISION	BY	DATE
			4	As-Built	WBH	1-17-50
MADE	LIB	9-4-53	3	Stiffener Angle	WCM	1-8-54
TRACED	HJG	10-24-53	2	Diaphragm Designed	HJG	10-13-53
CHECKED	F.S.JR.	12-8-53	1	Redrawn	LIB	9-4-53
IN CHARGE OF	IDSK					

MAINE TURNPIKE AUTHORITY
MAINE TURNPIKE
SECTION 2 — PORTLAND TO AUGUSTA

STANDARD DIAPHRAGM DETAILS

HOWARD, NEEDLES, TAMMEN & BERGENDOFF
CONSULTING ENGINEERS

SCALE: 3/8" = 1'-0"
CONTRACT NO.
SHEET NO. 6 OF 888

STANDARD DRAWING NO. 6

Date:12/13/2013

Filename: ...\st\planset\065_asbuilt_09.dgn

Scale: NOT TO SCALE

No.	Revision	By	Date

Designed by:

VHB Vanasse Hangen Brustlin, Inc.

CONSULTANT PROJECT MANAGER: T. Bryant

	By	Date		By	Date
Designed	KZS	12/13	Checked	SMH	12/13
Drawn	CMD	12/13	In Charge of	TSB	12/13

VANASSE HANGEN BRUSTLIN, INC.
500 Southborough Dr.
Suite 105B
South Portland, ME 04106
TEL (207) 889-3150
FAX (207) 253-5596

MAINE TURNPIKE

THE GOLD STAR MEMORIAL HIGHWAY

MTA PROJECT MANAGER: Ralph C. Norwood IV

SUPERSTRUCTURE REPLACEMENT
LITCHFIELD ROAD UNDERPASS

AS-BUILTS AND STANDARD DETAILS

SHEET NUMBER: 65

CONTRACT: 2014.07

65 OF 70

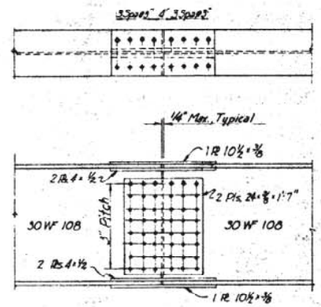

SPLICE 30-1

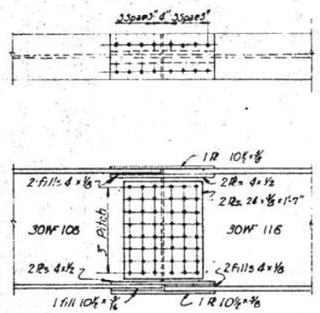

SPLICE 30-2

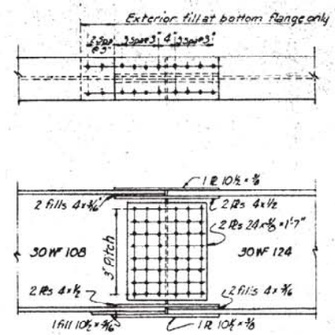

SPLICE 30-3

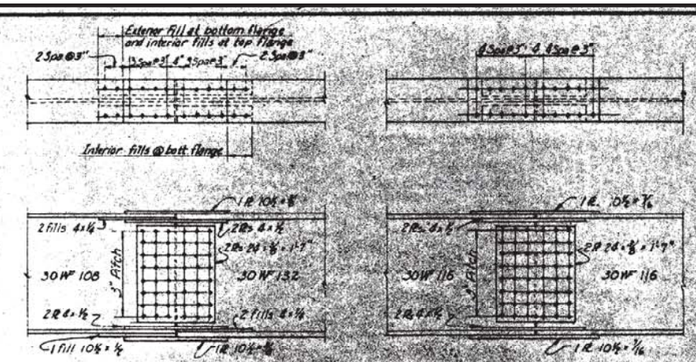

SPLICE 30-4 SPLICE 30-5

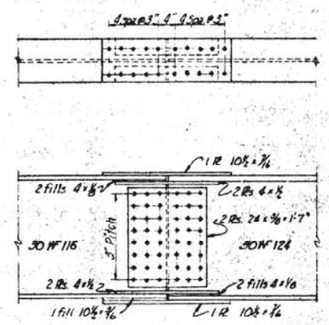

SPLICE 30-6

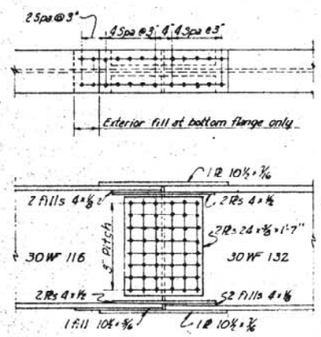

SPLICE 30-7

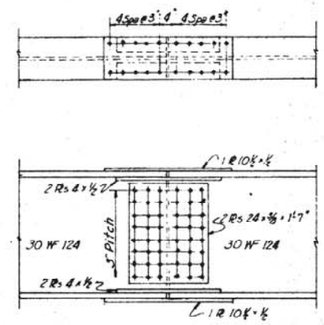

SPLICE 30-8

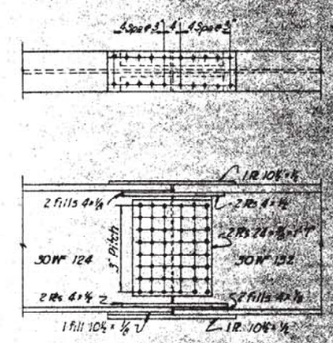

SPLICE 30-9

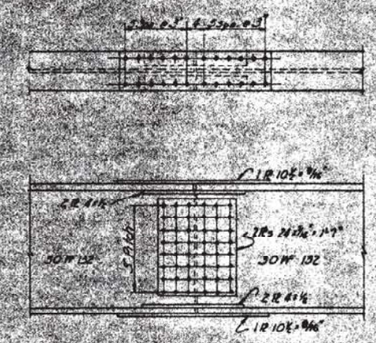

SPLICE 30-10

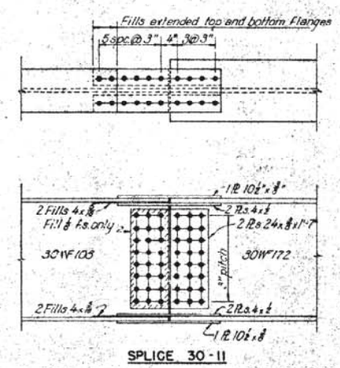

SPLICE 30-11

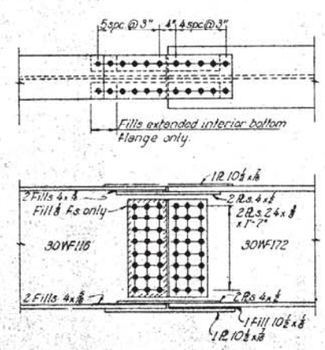

SPLICE 30-12

IDENTIFICATION AND WEIGHT IN POUNDS OF 30 WF BEAM SPLICES														
LIGHTER BEAM	SPLICE NO. AND HEAVIER BEAM SIZE													
	NO.	210	NO.	190	NO.	172	NO.	132	NO.	124	NO.	116	NO.	108
108					30-11	275	30-4	290	30-3	265	30-2	255	30-1	240
116					30-12	300	30-7	295	30-6	280	30-5	265		
124							30-9	290	30-8	280				
132							30-10	350						
172														
190														
210														

Note: Type "A" splices are designed for 75% of the capacity of the smaller of the two beams being spliced together with 2 holes out of each flange and 8 holes out of the web. The simultaneous shear capacities are as tabulated and are in all cases equal to or greater than 75% of the shear capacity of the lighter web.

All rivets are 15/16" ϕ, holes 15/16" ϕ

Web splice plates shall have horizontal rolled or mill sheared edges.

Vertical edges may be shop sheared or flame cut.

CAPACITY OF SPLICES		
BEAM	MOMENT IN-KIPS	SHEAR KIPS
108	3270	128
116	3580	132
124	3870	137
132	4140	143
172		
190		
210		

	BY	DATE				
MADE	LLD	9-24-53	3	As-Built	HBH	11-7-56
TRACED			2	Splices 30-11, 30-12	LLB	4-16-54
CHECKED	HJG	10-6-53	1	Checking Revisions	HJG	10-13-53
IN CHARGE OF	IDSK		No.	REVISION	BY	DATE

MAINE TURNPIKE AUTHORITY

MAINE TURNPIKE

SECTION 2— PORTLAND TO AUGUSTA

STANDARD

TYPE "A" SPLICES FOR 30 WF BEAMS

HOWARD, NEEDLES, TAMMEN & BERGENDOFF
CONSULTING ENGINEERS
NEW YORK KANSAS CITY

SCALE: 3/4" = 1'-0"
CONTRACT NO. _____
SHEET NO. 12 OF 32

STANDARD DRAWING NO. 6

Date:12/13/2013

Filename: ...\st\planset\066_asbuilt_10.dgn

Scale: NOT TO SCALE

No.	Revision	By	Date

Designed by:

VHB Vanasse Hangen Brustlin, Inc.

CONSULTANT PROJECT MANAGER: T. Bryant

	By	Date		By	Date
Designed	KZS	12/13	Checked	SMH	12/13
Drawn	CMD	12/13	In Charge of	TSB	12/13

VANASSE HANGEN BRUSTLIN, INC.
500 Southborough Dr.
Suite 105B
South Portland, ME 04106
TEL (207) 889-3150
FAX (207) 253-5596

MAINE TURNPIKE

THE GOLD STAR MEMORIAL HIGHWAY

MTA PROJECT MANAGER: Ralph C. Norwood IV

SUPERSTRUCTURE REPLACEMENT
LITCHFIELD ROAD UNDERPASS

AS-BUILTS AND STANDARD DETAILS

SHEET NUMBER: 66

CONTRACT: 2014.07

66 OF 70

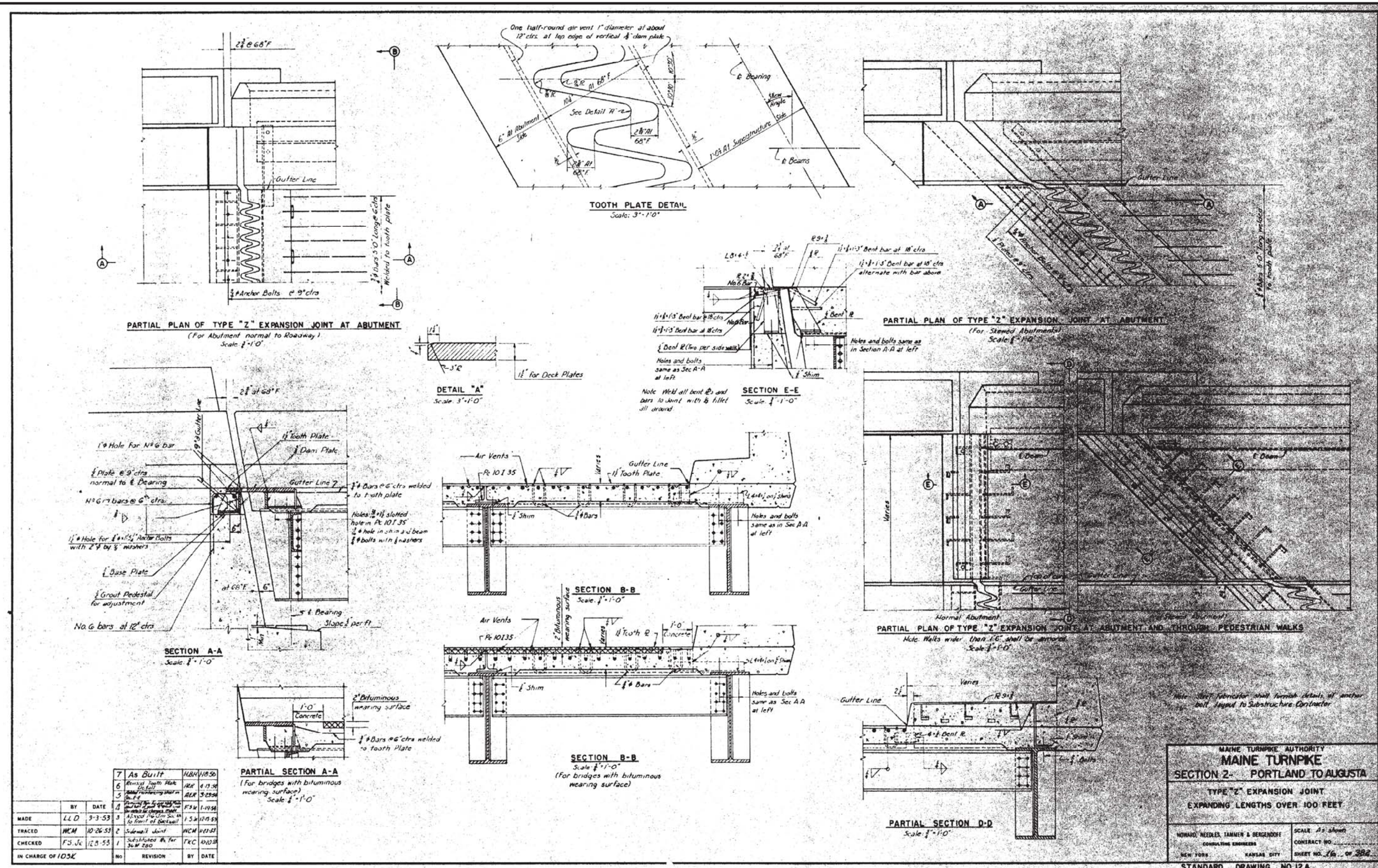

Date:12/13/2013

Filename: ...\st\planset\067_asbuilt_11.dgn

Scale: NOT TO SCALE

No.	Revision	By	Date

Designed by:

VHB Vanasse Hangen Brustlin, Inc.

CONSULTANT PROJECT MANAGER: T. Bryant

	By	Date		By	Date
Designed	KZS	12/13	Checked	SMH	12/13
Drawn	CMD	12/13	In Charge of	TSB	12/13

VANASSE HANGEN BRUSTLIN, INC.
500 Southborough Dr.
Suite 105B
South Portland, ME 04106
TEL (207) 889-3150
FAX (207) 253-5596

MAINE TURNPIKE

THE GOLD STAR MEMORIAL HIGHWAY

MTA PROJECT MANAGER: Ralph C. Norwood IV

SUPERSTRUCTURE REPLACEMENT
LITCHFIELD ROAD UNDERPASS

AS-BUILTS AND STANDARD DETAILS

SHEET NUMBER: 67

CONTRACT: 2014.07

67 OF 70

SD-18

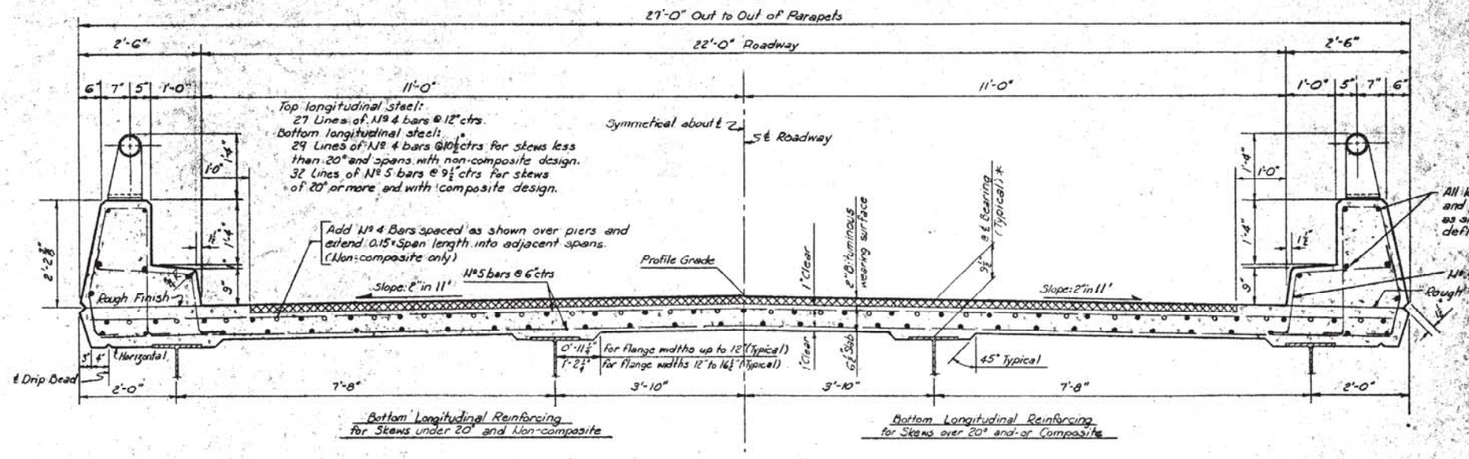

22'-0" ROADWAY

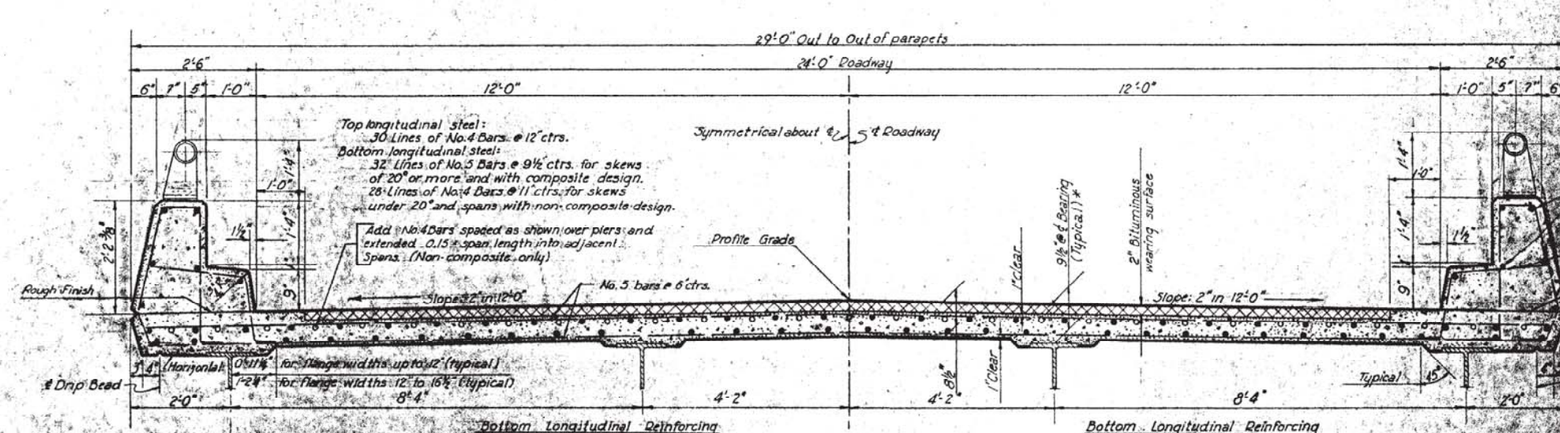

24'-0" ROADWAY

Note: Cross-sections of bridges on curves or superelevation are to be altered as shown on individual bridge plans.

* The depth of concrete over the tops of beams shall be varied as necessary to insure uniform floor thickness between haunches and conformity of final concrete surfaces of floor, curbs, and parapet walls, with required elevations after deflection under full dead load.

Note: Top of parapet slopes ¼" to inside
All chamfers are 1".

All longitudinal bars in curb and parapet shall be discontinuous at deflection joints.

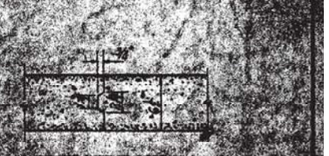

BRIDGE FLOOR CONSTRUCTION JOINT DETAIL
Scale: ½" = 1'-0"

MAINE TURNPIKE AUTHORITY
MAINE TURNPIKE
SECTION 2 — PORTLAND TO AUGUSTA
STANDARD BRIDGE FLOOR CROSS SECTION 24'-0" & 22'-0" ROADWAY WITH BITUMINOUS WEARING SURFACE
HOWARD NEHER, TUNNER & BENNENHOFF CONSULTING ENGINEERS KANSAS CITY
SCALE: NOTED
CONTRACT NO.
DATE: 1-1-55
STANDARD DRAWING NO. 18

	BY	DATE	No.	REVISION	BY	DATE
			5	As-Built	HBH	11-8-55
			4	Wrong Crss Slope for 24' Roadway Corrected & Amended	HJG	6-28-54
MADE	L.L.D.	11-3-53	3	Purchasing stmt	AKR	9-28-54
TRACED			2	Added Note	HCH	4-11-53
CHECKED	T.K.C.	11-24-53	1	Lowered Rail (Parapet)	HJG	4-16-53
IN CHARGE OF	L.D.S.V.					

Date:12/13/2013

Filename: ...\st\planset\068_asbuilt_12.dgn

Scale: NOT TO SCALE

No.	Revision	By	Date

Designed by:

VHB Vanasse Hangen Brustlin, Inc.

CONSULTANT PROJECT MANAGER: T. Bryant

	By	Date		By	Date
Designed	KZS	12/13	Checked	SMH	12/13
Drawn	CMD	12/13	In Charge of	TSB	12/13

VANASSE HANGEN BRUSTLIN, INC.
500 Southborough Dr.
Suite 105B
South Portland, ME 04106
TEL (207) 889-3150
FAX (207) 253-5596

MAINE TURNPIKE

THE GOLD STAR MEMORIAL HIGHWAY

MTA PROJECT MANAGER: Ralph C. Norwood IV

SUPERSTRUCTURE REPLACEMENT
LITCHFIELD ROAD UNDERPASS

AS-BUILTS AND STANDARD DETAILS

SHEET NUMBER: 68

CONTRACT: 2014.07

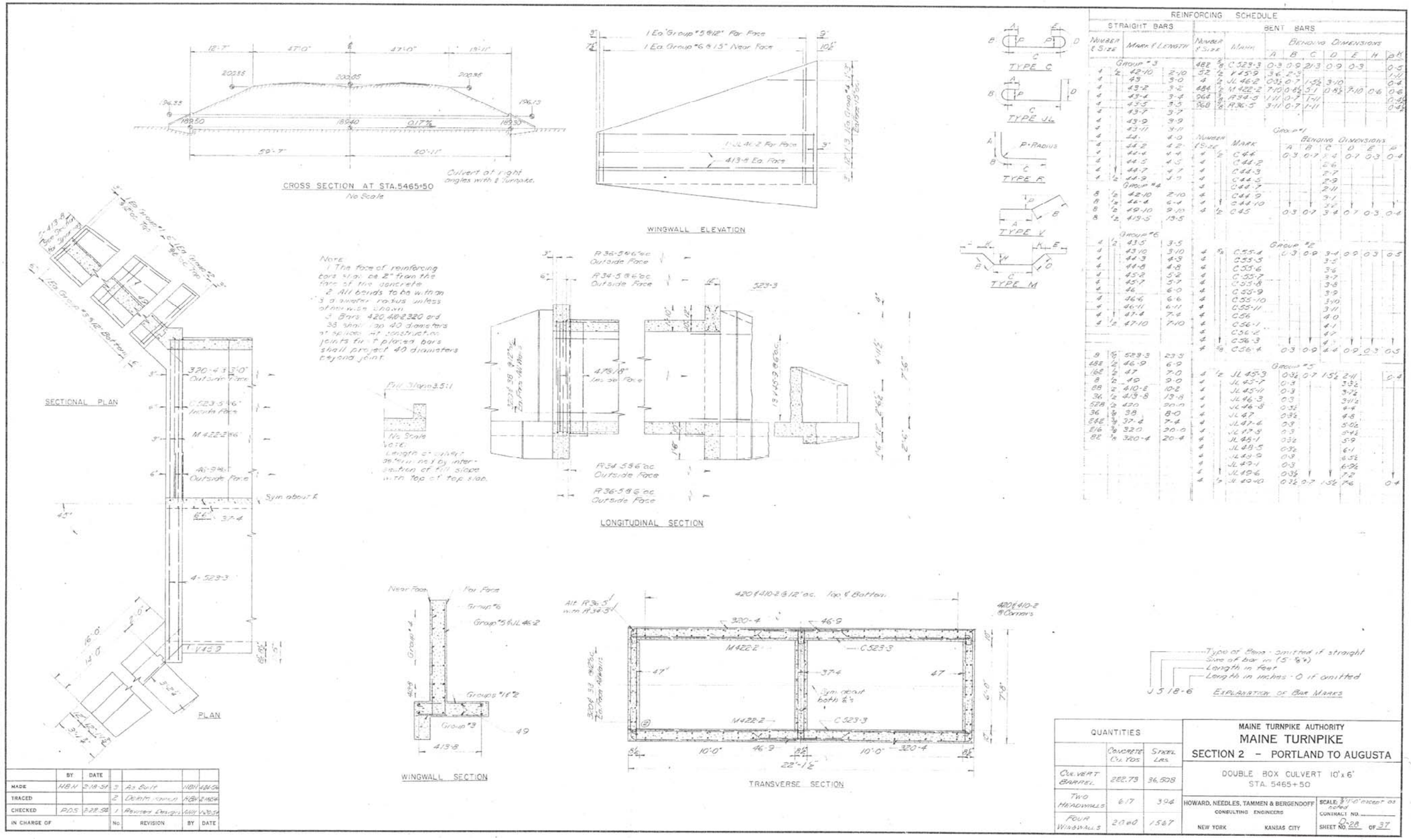

Date:12/13/2013

Filename: ...\st\planset\069_asbuilt_13.dgn

Scale: NOT TO SCALE

No.	Revision	By	Date

Designed by:

Vanasse Hangen Brustlin, Inc.

CONSULTANT PROJECT MANAGER: T. Bryant

	By	Date		By	Date
Designed	KZS	12/13	Checked	SMH	12/13
Drawn	CMD	12/13	In Charge of	TSB	12/13

VANASSE HANGEN BRUSTLIN, INC.
500 Southborough Dr.
Suite 105B
South Portland, ME 04106
TEL (207) 889-3150
FAX (207) 253-5596

MAINE TURNPIKE

THE GOLD STAR MEMORIAL HIGHWAY

MTA PROJECT MANAGER: Ralph C. Norwood IV

SUPERSTRUCTURE REPLACEMENT
LITCHFIELD ROAD UNDERPASS

VAUGHN BROOK CULVERT AS-BUILT

SHEET NUMBER: 69

CONTRACT: 2014.07

69 OF 70

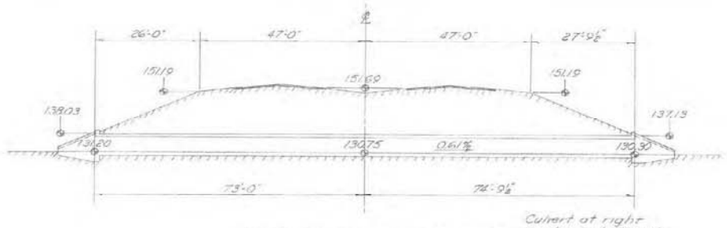

CROSS SECTION AT STA. 4932+25
No Scale

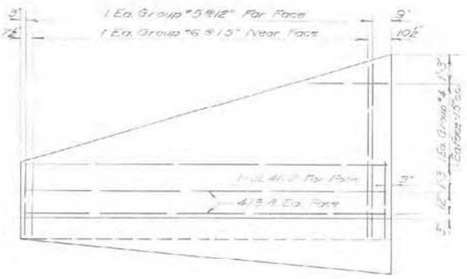

WINGWALL ELEVATION

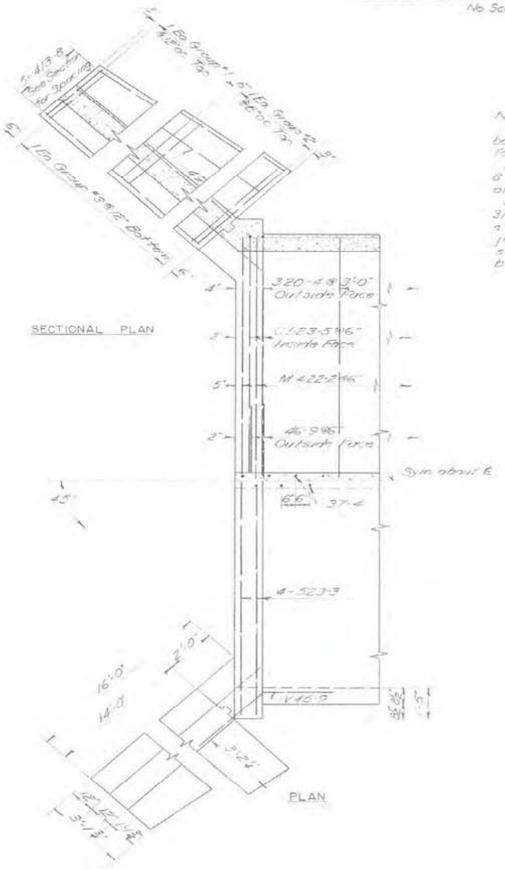

SECTIONAL PLAN

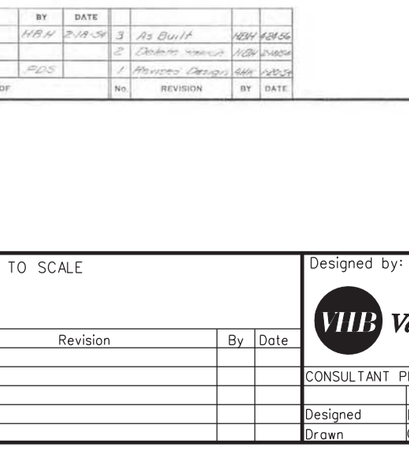

Note:
1. The face of reinforcing bars shall be 2" from the face of the concrete.
2. All bends to be within 8 diameter radius unless otherwise shown.
3. Bars 420, 419, 320 and 316-E shall lap 40 diameters at splices. At construction joints first placed bars shall project 40 diameters beyond joint.

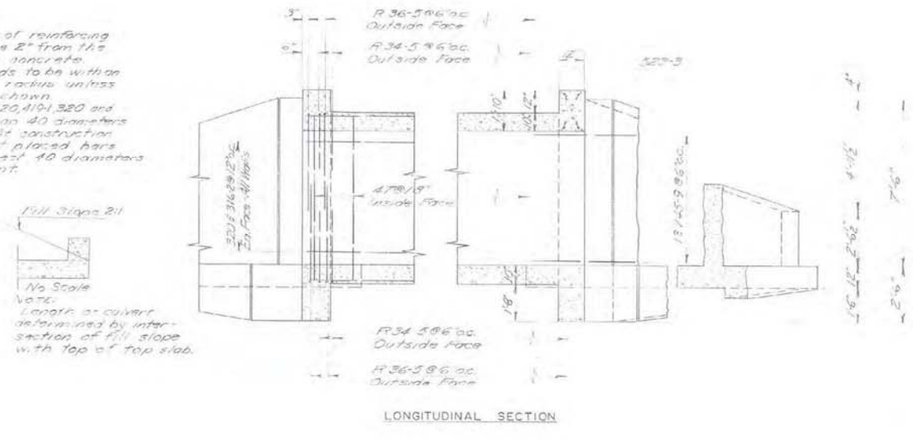

LONGITUDINAL SECTION

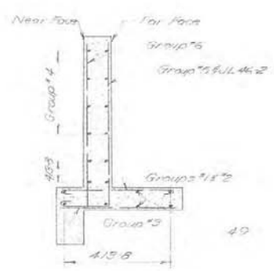

WINGWALL SECTION

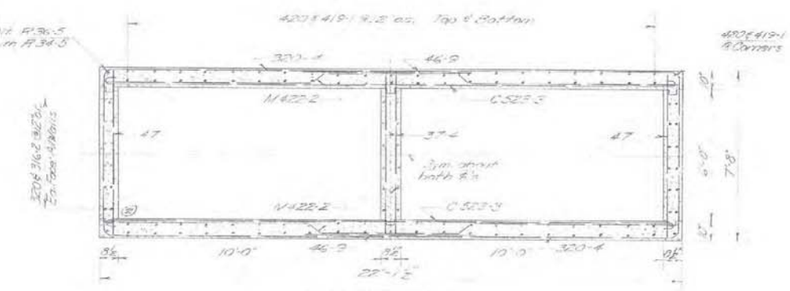

TRANSVERSE SECTION

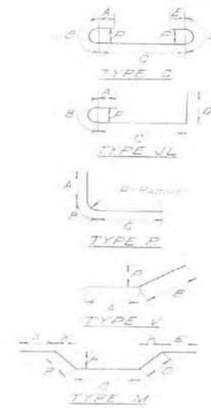

REINFORCING SCHEDULE

STRAIGHT BARS

Number & Size	Mark & Length
Group #3	
4 ½	42-10 7-10
4	43 4-0
4	43-2 9-2
4	43-1 9-1
4	43-5 9-5
4	43-7 9-7
4	43-9 9-9
4	43-11 9-11
4	44 4-0
4	44-3 4-3
4	44-4 4-4
4	44-5 4-5
4	44-7 4-7
4 ½	44-9 4-9
Group #4	
8 ½	42-10 7-10
9 ½	44-4 6-4
9 ½	49-10 9-10
8 ½	413-5 13-5
Group #6	
4 ½	43-5 3-5
4	43-10 3-10
4	44-3 4-3
4	44-8 4-8
4	45-2 5-2
4	45-7 5-7
4	46 6-0
4	46-6 6-6
4	46-11 6-11
4	47-6 7-6
4 ½	47-10 7-10
8 5/8	523-3 23-3
590 ½	46-9 6-0
198 ½	47 7-0
8 ½	49 9-0
88 ½	413-1 19-1
36 ½	413-8 13-8
616 ½	420 20-0
36 ½	316-E 16-2
296 ½	37-4 7-4
252 ½	320 20-0
95 ½	320-4 20-4

BENT BARS

Number & Size	Mark	A	B	C	D	E	H	Σ R
590 ¾	C 523-3	0-3	0-9	21-3	0-9	0-3		0-3
198 ¾	M 422-2	3-6	2-3					1-11
4 ½	JL 46-2	0-3½	0-7	1-5½	3-10			0-4
592 ¾	M 422-2	7-10	0-3½	3-1	0-3½	7-10	0-6	0-6
1180 ¾	R 34-5	1-11	0-7	1-11				0-4½
1184 ¾	R 36-5	3-11	0-7	1-11				0-4½

Group #1

Number & Size	Mark	A	B	C	D	E	F
4	C 44	0-3	0-7	7-4	0-7	0-3	0-4
4	C 44-2			2-6			
4	C 44-3			2-7			
4	C 44-5			2-9			
4	C 44-7			2-11			
4	C 44-9			3-1			
4	C 44-10			3-2			
4 ½	C 45	0-3	0-7	3-4	0-7	0-3	0-4

Group #2

Number & Size	Mark	A	B	C	D	E	F
4	C 53-4	0-3	0-9	3-4	0-9	0-3	0-3
4	C 53-5			3-5			
4	C 53-6			3-6			
4	C 53-7			3-7			
4	C 53-8			3-8			
4	C 53-9			3-9			
4	C 53-10			3-10			
4	C 53-11			3-11			
4	C 54			4-0			
4	C 54-1			4-1			
4	C 54-2			4-2			
4	C 54-3			4-3			
4 ⅝	C 54-4	0-3	0-9	4-4	0-9	0-3	0-3

Group #5

Number & Size	Mark	A	B	C	D	E	F
4 ½	JL 45-3	0-3½	0-7	1-5½	2-11		0-4
4	JL 45-7	0-3			3-3½		
4	JL 45-11	0-3			3-7½		
4	JL 46-3	0-3			3-11½		
4	JL 46-8	0-3½			4-4		
4	JL 47	0-3½			4-8		
4	JL 47-4	0-3			5-0½		
4	JL 47-9	0-3			5-4½		
4	JL 49-1	0-3½			5-9		
4	JL 49-5	0-3½			6-1		
4	JL 49-9	0-3			6-5½		
4	JL 49-1	0-3			6-9½		
4	JL 49-6	0-3½			7-2		
4 ½	JL 49-10	0-3½	0-7	1-5½	7-6		0-4

Type of Bend - omitted if straight
Size of bar in (5/8")
Length in feet
Length in inches - 0 if omitted
J 5 18-6
EXPLANATION OF BAR MARKS

	BY	DATE				
MADE	HBH	3-18-54	3	As Built	HBH	12-8-56
TRACED			2	Contents Corrected	HBH	2-14-54
CHECKED	FDS		1	Revised Design	HH	10-8-53
IN CHARGE OF			No.	REVISION	BY	DATE

QUANTITIES	Concrete Cu. Yds.	Steel Lbs.
Culvert Barrel	271.09	44,500
Two Wingwalls	6.17	394
Four Wingwalls	20.60	1567

MAINE TURNPIKE AUTHORITY
MAINE TURNPIKE
SECTION 2 – PORTLAND TO AUGUSTA

DOUBLE BOX CULVERT 10' x 6'
STA. 4932+25

HOWARD, NEEDLES, TAMMEN & BERGENDOFF
CONSULTING ENGINEERS
NEW YORK KANSAS CITY

SCALE: 3/8" = 1'-0" except noted
CONTRACT NO. ____
SHEET NO. D-27

Scale: NOT TO SCALE

No.	Revision	By	Date

Designed by:
VHB Vanasse Hangen Brustlin, Inc.

CONSULTANT PROJECT MANAGER: T. Bryant

	By	Date		By	Date
Designed	KZS	12/13	Checked	SMH	12/13
Drawn	CMD	12/13	In Charge of	TSB	12/13

VANASSE HANGEN BRUSTLIN, INC.
500 Southborough Dr.
Suite 105B
South Portland, ME 04106
TEL (207) 889-3150
FAX (207) 253-5596

MAINE TURNPIKE
THE GOLD STAR MEMORIAL HIGHWAY

MTA PROJECT MANAGER: Ralph C. Norwood IV

SUPERSTRUCTURE REPLACEMENT
LITCHFIELD ROAD UNDERPASS

POTTERS BROOK CULVERT AS-BUILT

SHEET NUMBER: 70
70 OF 70

CONTRACT: 2014.07

Date: 12/13/2013

Filename: ...\st\planset\070_asbuilt_14.dgn