Contract 2016.04
Superstructure Replacement
Maple Street Underpass
Mile 106.0

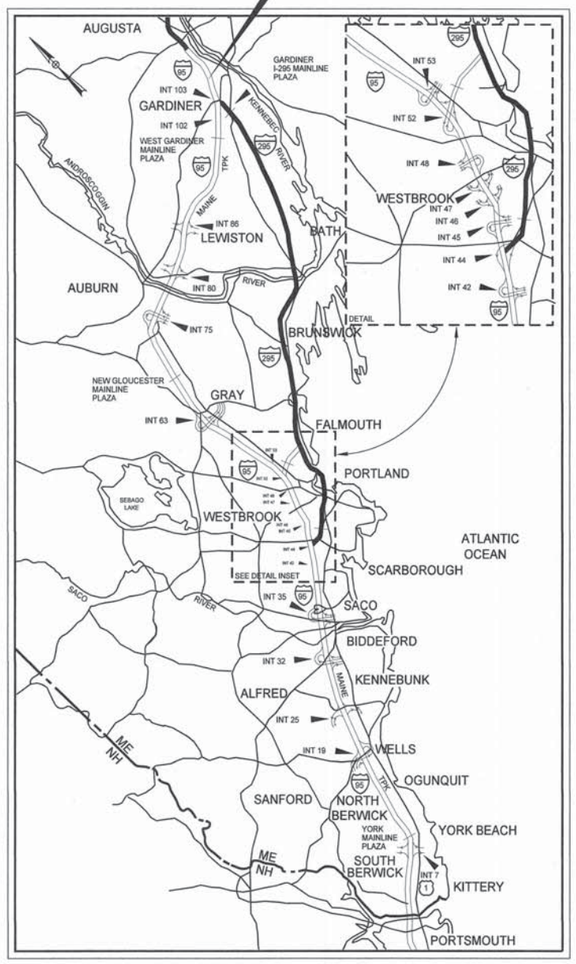

LOCATION MAP

MAINE TURNPIKE

THE GOLD STAR
MEMORIAL HIGHWAY

MAINE TURNPIKE AUTHORITY

DANIEL E. WATHEN, CHAIR
JAMES F. CLOUTIER, VICE CHAIR
FREEMAN R. GOODRICH, MEMBER
KAREN S. DOYLE, EX-OFFICIO MEMBER
GERARD P. CONLEY, SR., MEMBER
JOHN E. DORITY, MEMBER
ROBERT D. STONE, MEMBER

S. PETER MILLS, EXECUTIVE DIRECTOR

CONTRACT 2016.04
SUPERSTRUCTURE REPLACEMENT
MAPLE STREET UNDERPASS
MILE 106.0

INDEX OF SHEETS

SHEET NO.	DESCRIPTION
1	Title Sheet
2	Estimated Quantities and Earthwork
3	General Notes
4	Typical Roadway Sections
5-6	Typical Details (2 Sheets)
7	Fencing Details
8-9	General Plan (2 Sheets)
10-11	Profile (2 Sheets)
12-19	Cross Sections (8 Sheets)
20	Disturbance Impact Plan
21	Detour Plan and Sign Summary
22-24	Work Zone Plans (3 Sheets)
25	Bridge Plan and Elevation
26	Bridge Survey Layout Plan
27	Abutment No. 1 Removal
28	Abutment No. 1 Repair and Modifications
29	Abutment No. 1 Reinforcement
30	Abutment No. 2 Removal
31	Abutment No. 2 Repair and Modifications
32	Abutment No. 2 Reinforcement
33	Miscellaneous Abutment Details
34	Abutment Wingwalls Reinforcement
35	Pier No. 1 Repair and Modifications
36	Pier Cap No. 1 Reinforcement
37	Pier No. 2 Repair and Modifications
38	Pier Cap No. 2 Reinforcement
39	Pier No. 3 Repair and Modifications
40	Pier Cap No. 3 Reinforcement
41	Abutment Bearing Details
42	Pier Bearing Details
43	Typical Superstructure Sections and Details
44	Framing Plan and Girder Elevation
45	Diaphragm Details
46	Field Splice and Stress Diagram
47	Miscellaneous Details
48	Table of Deflections and Bottom of Slab Elevations
49	Camber Ordinates and Diagram
50-51	Deck Reinforcement (2 Sheets)
52-53	Curtain Wall Details (2 Sheets)
54	Bridge Rail Details
55	Bridge Rail Transition
56	Snow Fence Details
57	Reinforcing Steel Schedule
58	Right of Way Map
59-70	As-builts and Standard Details (12 Sheets)

Contract 2016.04

APPROVED:

MAINE TURNPIKE AUTHORITY

PETER S. MERFELD, P.E. - CHIEF OPERATIONS OFFICER — DATE 12/28/15

STEPHEN R. TARTRE, P.E. - DIRECTOR OF ENGINEERING & BUILDING MAINTENANCE — DATE 12/29/15

STATE OF MAINE
TIMOTHY S. BRYANT
No. 12080
LICENSED
PROFESSIONAL ENGINEER

vhb

Timothy S. Bryant, P.E.
Consultant Project Manager

DATE 12-23-2015

Date:12/23/2015

Filename: ...\st\plonset\001_title_01.dgn

ESTIMATED QUANTITIES

ITEM NO.	DESCRIPTION		QUANTITY	UNIT
202.10	Removing Existing Superstructure - Property of Contractor		1	LS
202.17	Removing Existing Structural Concrete	(40 CY)*	1	LS
202.202	Removing Pavement Surface		140	SY
203.20	Common Excavation		530	CY
203.24	Common Borrow		600	CY
203.25	Granular Borrow		100	CY
304.10	Aggregate Subbase Course - Gravel		340	CY
403.210	Hot Mix Asphalt, 9.5 mm Nominal Maximum Size		210	TON
403.213	Hot Mix Asphalt, 12.5 mm Nominal Maximum Size (Base and Intermediate Course)		170	TON
409.15	Bituminous Tack Coat, Applied		55	GAL
419.30	Sawing Bituminous Pavement		50	LF
502.21	Structural Concrete, Abutments and Retaining Walls		40	CY
502.23	Structural Concrete, Piers		25	CY
502.26	Structural Concrete Roadway and Sidewalk Slab on Steel Bridges	(170 CY)*	1	LS
502.49	Structural Concrete Curbs and Sidewalk	(30 CY)*	1	LS
503.12	Reinforcing Steel, Fabricated and Delivered		450	LB
503.13	Reinforcing Steel, Placing		450	LB
503.14	Epoxy-Coated Reinforcing Steel, Fabricated and Delivered		67000	LB
503.15	Epoxy-Coated Reinforcing Steel, Placing		67000	LB
504.702	Structural Steel, Fabricated and Delivered, Welded	(114900 LB)*	1	LS
504.71	Structural Steel Erection	(114900 LB)*	1	LS
505.08	Shear Connectors	(3070 EA)*	1	LS
506.9102	Zinc Rich Coating System (Shop Applied)		1	LS
506.99	Clean and Paint Existing Bearings		10	EA
507.0821	Steel Bridge Railing, 3 Bar	(487 LF)*	1	LS
508.14	High Performance Waterproofing Membrane	(565 SY)*	1	LS
508.15	Membrane Waterproofing	(75 SY)*	1	LS
514.06	Curing Box for Concrete Cylinders		1	EA
515.201	Pigmented Protective Coating for Concrete Surfaces		310	SY
515.202	Clear Protective Coating for Concrete Surfaces		410	SY
518.10	Abutment Repairs		12	SF
518.20	Pier Repairs		309	SF
518.41	Epoxy Injection Crack Repair		39	LF
520.232	Expansion Device - Asphaltic Plug Joint		52	LF
520.234	Expansion Device - Silicone Coated and Pre-compressed Seal		22	LF
523.52	Bearing Installation		25	EA
523.5402	Laminated Elastomeric Bearings, Expansion		10	EA
523.5404	PTFE Elastomeric Bearings, Expansion		15	EA
524.40	Protective Shielding - Steel Girders		810	SY
526.306	Temporary Concrete Barrier, Type I - Supplied by Authority	(450 LF)*	1	LS
527.34	Work Zone Crash Cushions - TL-3		2	UNIT
606.1728	W-Beam to 3-Bar Bridge Rail Transition		4	EA
606.244	Guardrail Type 3d - Single Rail, 7 Foot Posts		557	LF
606.353	Reflectorized Flexible Guardrail Marker		6	EA
606.79	Guardrail 350 Flared Terminal		3	EA
607.17	Chain Link Fence - 6 Foot		345	LF
607.23	Chain Link Fence Gate		2	EA
607.32	Bracing Assembly Type I - Metal Posts		18	EA
607.33	Bracing Assembly Type II - Metal Posts		8	EA
607.431	Snow Fence		208	LF
609.11	Vertical Curb Type I		143	LF
610.08	Plain Riprap		190	CY
610.18	Stone Ditch Protection		45	CY
613.319	Erosion Control Blanket		1100	SY
615.07	Loam		175	CY
618.1411	Seeding Method Number 3, Plan Quantity		14.2	UNIT
619.1201	Mulch - Plan Quantity		14.2	UNIT
619.1202	Temporary Mulch		1	LS
620.58	Erosion Control Geotextile		440	SY
627.712	4 Inch White or Yellow Pavement Marking Line		630	LF
629.05	Hand Labor, Straight Time		60	HR
631.12	All-Purpose Excavator (Including Operator)		10	HR
631.171	Truck - Small (Including Operator)		20	HR
631.36	Foreman		20	HR
645.105	Remove and Stack Sign		4	EA
645.109	Remove and Reset Sign		1	EA
645.272	Regulatory, Warning and Bridge Number Signs, Type I - Supplied by Authority		6	EA
652.30	Flashing Arrow		2	EA
652.312	Type III Barricades		10	EA
652.33	Drum		100	EA
652.34	Cones		25	EA
652.35	Construction Signs		1606	SF
652.361	Maintenance of Traffic Control Devices		1	LS
652.41	Portable-Changeable Message Sign		4	EA
652.45	Truck Mounted Attenuator		100	CD
656.50	Baled Hay, in place		10	EA
656.632	30 in Temporary Silt Fence		1380	LF
659.10	Mobilization		1	LS

* Quantities are Estimated Only

EARTHWORK SUMMARY - MAPLE STREET

COMMON EXCAVATION FOR ESTIMATE

	Maple Street
Common Excavation	340 CY
Grubbing in Fill	111 CY
Pavement Removal	180 CY
Subtotal	455 CY
Total Common Excavation	455 CY

AVAILABLE COMMON EXCAVATION FOR BORROW CALCULATIONS

	Maple Street
(1) Total Common Excavation	455 CY
Deductions:	
Grubbing	111 CY
Existing Pavement Removal	180 CY
(2) Total Deductions:	291 CY
Total Available Common Excavation	164 CY
Total Available Structural Excavation	80 CY
Total Available Non-Rock Excavation	244 CY

FILL FOR BORROW CALCULATIONS

	Maple Street
Common Fill (From Cross Section)	600 CY
Subtotal	600 CY
Total Fill	600 CY

COMPUTATION OF COMMON BORROW FOR ESTIMATE

	Maple Street
(3) Total Fill	600 CY
Total Available Non-Rock Excavation	244 CY
(4) Total Available Excavation	244 CY
(5) Total Deficit	356 CY

Scale: AS NOTED

No.	Revision	By	Date

Designed by: vhb

CONSULTANT PROJECT MANAGER: T. Bryant

	By	Date		By	Date
Designed	MED	12/2015	Checked	GME	12/2015
Drawn	CLC	12/2015	In Charge of	TSB	12/2015

VANASSE HANGEN BRUSTLIN, INC.
500 Southborough Dr.
Suite 105B
South Portland, ME 04106
TEL (207) 889-3150
FAX (207) 253-5596

MAINE TURNPIKE

THE GOLD STAR MEMORIAL HIGHWAY

MTA PROJECT MANAGER: Ralph Norwood, IV

SUPERSTRUCTURE REPLACEMENT
MAPLE STREET UNDERPASS

ESTIMATED QUANTITIES AND EARTHWORK

VHB: 55068.00 SHEET NUMBER: 2
CONTRACT: 2016.04 2 OF 70

Date: 1/4/2016
Filename: ...\cad\st\planset\002_qnty_01.dgn

GENERAL CONSTRUCTION NOTES

1. All details shall be in conformance with Maine Department of Transportation (MaineDOT) 2014 Standard Details for Highways and Bridges with all updates, and MaineDOT Best Management Practices for Erosion and Sediment Control latest revision unless otherwise noted in these plans.

2. During construction, the road will be closed to traffic for a time period specified in the Special Provisions.

3. For construction limits and right of way lines, refer to General Plan. There are no permanent or temporary easements associated with this project. All work must be completed within the existing Right of Way.

4. Chain link fence gates shall be 3 feet wide single gates. A gate shall be located on each side of the turnpike roadway. Exact location of the gate shall be determined in the field by the Resident.

5. Connections to existing fence shall be incidental to the proposed fence items.

6. Existing ROW fence within the limits of work, as shown on the plans or as directed by the Resident, shall be removed and disposed. This work shall be incidental to the proposed fence items.

7. The Contractor shall submit his proposed staging area(s) and field trailer location to the Resident for approval prior to starting work.

8. All portions of the existing bridge superstructure are to be removed by and become the property of the Contractor, excluding the bearings. The steel portions of the existing bridge are coated with a lead-based paint system. The Contractor is responsible for the containment, proper management and disposal of all lead-contaminated hazardous waste generated by the process of demolishing the bridge.

9. The existing exterior girder bearings shall be removed by and become property of the Contractor. The existing interior girder bearings shall be removed, cleaned and painted, and delivered to the MTA Gardiner Maintenance yard, as directed by the Resident. See Special Provision Section 506.

10. Milling of existing pavement shown at end of project shall be paid under Item 202.202 Removing Pavement Surface.

11. For additional details referenced or not shown in these drawings, see the State of Maine, Department of Transportation Standard Details, Highways and Bridges, November 2014 with updates.

12. Copies of the As-Built plans are included in this contract for the Contractor's convenience. The completeness and accuracy of these plans is not guaranteed.

13. Chamfer all exposed concrete edges ¾" unless otherwise noted.

14. The proposed elevations are based on the NAVD 88 datum. The as-built plans are based on NGVD 29 datum.

15. Existing timber gutters and metal drainage pipes in front of the abutments shall be removed as directed by the Resident. Payment will be considered incidental to Contract Items. See Special Provision Section 202.

16. Existing electrical control box and electrical riser to be removed as directed by the Resident. Payment will be considered incidental to Contract Items. See Special Provision Section 202.

17. The Contractor shall take all precautions necessary to avoid impacts to delineated wetland areas shown in these plans.

18. All existing substructure elevations shown in these plans are based on existing plans and limited survey. Prior to any substructure removal or fabrication of substructure reinforcing steel, the Contractor shall field verify all existing substructure elevations and adjust reinforcing lengths as needed.

19. The Contractor shall ensure that the overheight detection system immediately south of the bridge remains operational throughout the duration of construction.

EARTHWORK NOTES

1. The clearing shown in these plans will be completed under a separate contract prior to the start of this project. In all areas where clearing has been completed and grubbing is not required as part of this contract, the Contractor shall remove all stumps, as directed by the Resident. This work shall be incidental to the Contract.

2. Individual trees within the slope limit lines or called to be removed on the plans shall be removed and disposed. This work shall be incidental to the contract.

3. Do not excavate for Aggregate Subbase Course where existing material is suitable as determined by the Resident.

4. Existing pavement removal in fill areas will be paid for under Item 203.20, Common Excavation. Shim material required for these areas below the subbase will be paid under Item 304.10, Aggregate Subbase Course - Gravel or Item 203.24, Common Borrow as shown in the typical section.

5. The Contractor shall minimize slope disturbances where possible, as directed by the Resident.

ABUTMENT NOTES

1. Reinforcing steel shall have a minimum concrete cover of 2 inches in walls.

2. Cover joints where waterstops are not required in accordance with Standard Detail 502(01).

3. Abutments and wingwalls shall be backfilled with Granular Borrow as shown in the plans.

GUARDRAIL NOTES

1. Composite offset blocks shall be used with guardrail type 3d.

2. At the end of each work day, all guardrail within work areas accessible to traffic shall have an approved crashworthy end treatment.

EROSION CONTROL NOTES

1. The anticipated erosion control devices are shown on the plans. The Contractor shall propose actual type and location of devices for approval by the Resident. Additional devices may be proposed by the Contractor to implement additional measures. Any additional measures approved by the Resident will be measured for payment.

2. Temporary seed shall be applied to all disturbed areas that will not be completed within 30 days.

3. All temporary and permanent erosion control devices shall be installed in accordance with the Maine Department of Transportation Best Management Practices.

4. Temporary stone check dams shall be installed in accordance with the Maine Department of Transportation Best Management Practices.

5. Erosion Control Blanket, Item 613.319 shall be installed on 2:1 slopes from the top to toe of slope. Loam and seed shall be placed prior to the installation of the erosion control blanket.

6. Place loam 4 inches deep on all new or reconstructed sideslopes or as directed by the Resident.

UTILITY NOTES

1. Existing utilities on these plans were compiled from field survey and various other sources. Locations are not guaranteed to be accurate nor is it guaranteed that all utilities are shown. No separate or additional compensation shall be allowed to the Contractor due to any variance between the data shown on the plans and the actual field conditions encountered. No work shall be started until the owners of the various utilities are notified by the Contractor of the proposed construction. The Contractor shall contact Dig Safe (1-888-DIG-SAFE or 811) prior to starting work. In addition, Dig Smart of Maine shall be contacted prior to starting any work within MTA right-of-way. Contractor shall be responsible for any costs. Proof of utility location from both Dig Safe and Dig Smart (when applicable) shall be submitted prior to the commencement of any work.

2. All utility facilities shall be adjusted by the respective utilities unless noted.

3. The utilities involved in this contract are:
   - Central Maine Power (CMP)
   - Fairpoint Communications
   - Time Warner Cable

4. Prior to the start of construction, the Contractor shall coordinate with the appropriate utilities to shield the aerial lines adjacent to the bridge as needed.

DRILLED AND ANCHORED BOLTS AND REINFORCING STEEL NOTES

1. The anchoring material shall be one of the products on the Maine Department of Transportation Prequalified List. Installation shall be in accordance with the Manufacturer's recommendations.

2. Drilling and grouting shall be incidental to Items 503.13 and 503.15.

Date:12/31/2015

Filename: ...\planset\003_gen_notes_01.dgn

Scale: AS NOTED

No.	Revision	By	Date

Designed by: vhb

CONSULTANT PROJECT MANAGER: T. Bryant

	By	Date		By	Date
Designed	MED	12/2015	Checked	GME	12/2015
Drawn	CLC	12/2015	In Charge of	TSB	12/2015

VANASSE HANGEN BRUSTLIN, INC.
500 Southborough Dr.
Suite 105B
South Portland, ME 04106
TEL (207) 889-3150
FAX (207) 253-5596

MAINE TURNPIKE

THE GOLD STAR MEMORIAL HIGHWAY

MTA PROJECT MANAGER: Ralph Norwood, IV

SUPERSTRUCTURE REPLACEMENT
MAPLE STREET UNDERPASS

GENERAL NOTES

VHB: 55068.00
CONTRACT: 2016.04

SHEET NUMBER: 3

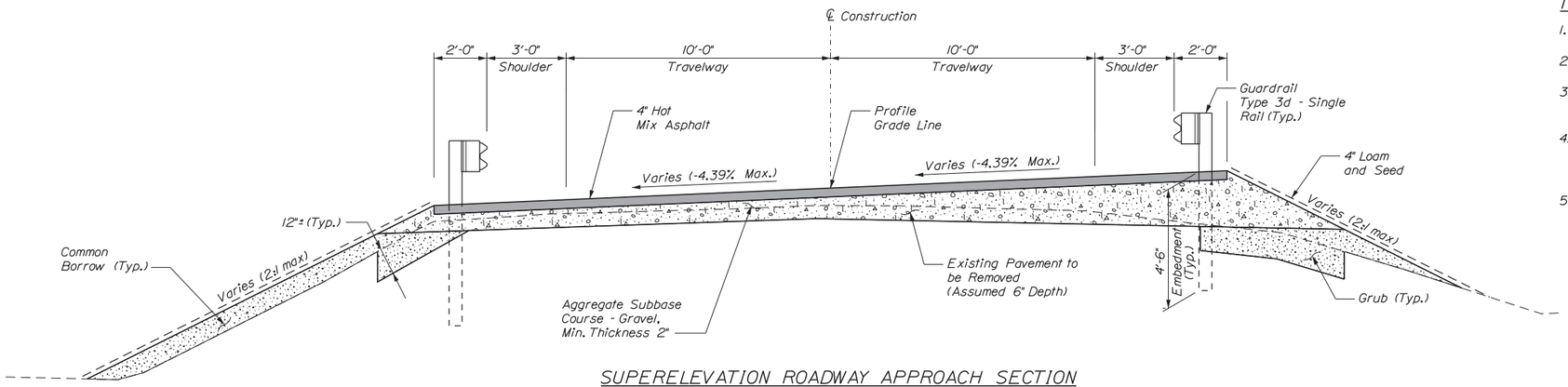

SUPERELEVATION ROADWAY APPROACH SECTION

Scale: 3/8" = 1'-0"

HMA NOTE

Hot Mix Asphalt - Approaches
Surface: 1 1/2" HMA (9.5 mm)
Base: 2 1/2" HMA (12.5 mm)

TYPICAL SECTION NOTES:

1. The pavement and subbase depths as shown on the plans are nominal.
2. Crowns for all courses of subbase and pavement shall be straight.
3. All necessary pavement cutting shall be sawcut and done in such a manner as to leave a clean vertical face.
4. Bituminous tack coat is required between all lifts of pavement and on all existing paved or milled surfaces prior to placing proposed pavement or as directed by the Resident.
5. All guardrail shall be Type 3d. single rail with 7' posts.

SUPERELEVATION (e) TABLE		
LEFT %	STATION	RIGHT %
-1.84	207+50	-2.97
-2.00	208+00	-2.00
-2.00	211+24	-2.00
-2.00	211+57	0.00
-2.00	211+90	+2.00
-4.39	212+29	+4.39
	TO	
-4.39	213+40	+4.39
-5.26	213+55	+4.39
-6.70	213+80	+2.93

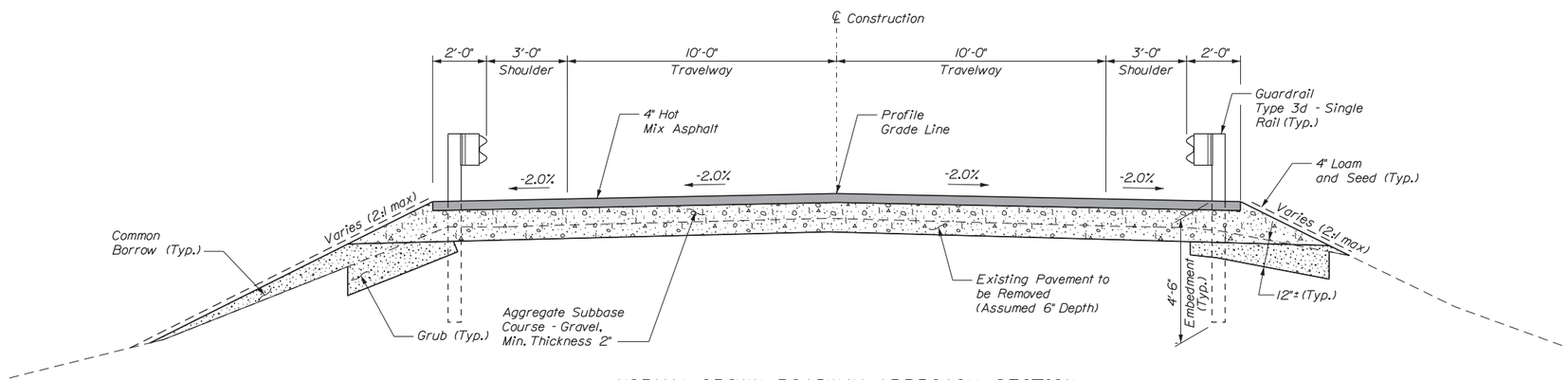

NORMAL CROWN ROADWAY APPROACH SECTION

Scale: 3/8" = 1'-0"

HMA NOTE

Hot Mix Asphalt - Approaches
Surface: 1 1/2" HMA (9.5 mm)
Base: 2 1/2" HMA (12.5 mm)

Date:12/31/2015

Filename: ...\st\planset\004_Road_Typ.dgn

Scale: 1 0 7
3/8" = 1'-0"

No.	Revision	By	Date

Designed by: vhb

CONSULTANT PROJECT MANAGER: T. Bryant

	By	Date		By	Date
Designed	CLC	12/2015	Checked	ECF	12/2015
Drawn	CLC	12/2015	In Charge of	TSB	12/2015

VANASSE HANGEN BRUSTLIN, INC.
500 Southborough Dr.
Suite 105B
South Portland, ME 04106
TEL (207) 889-3150
FAX (207) 253-5596

MAINE TURNPIKE

THE GOLD STAR MEMORIAL HIGHWAY

MTA PROJECT MANAGER: Ralph Norwood, IV

SUPERSTRUCTURE REPLACEMENT
MAPLE STREET UNDERPASS

TYPICAL ROADWAY SECTIONS

VHB: 55068.00
CONTRACT: 2016.04

SHEET NUMBER: 4

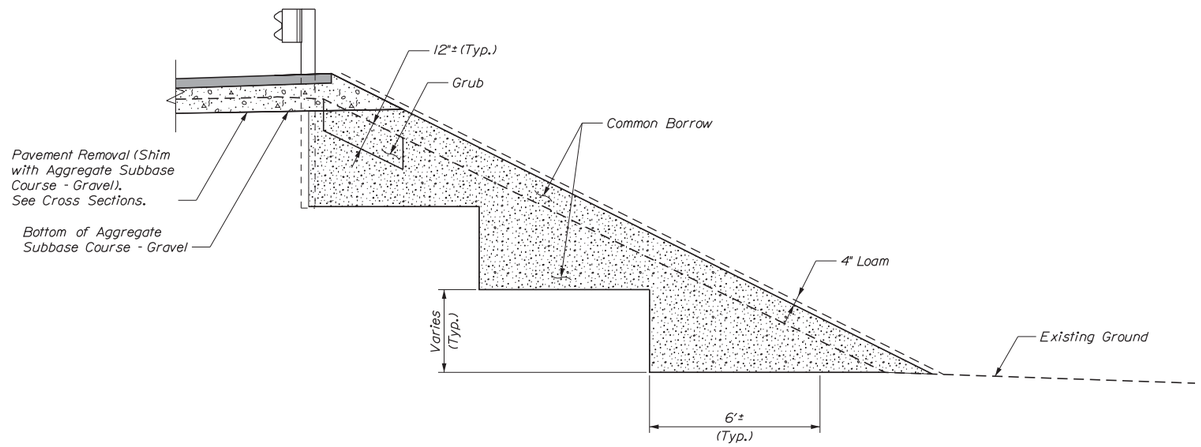

EMBANKMENT AND BENCH DETAIL

Scale: 3/8" = 1'-0"

GRUBBING AND BENCHING NOTES

1. Grubbing will be paid for under Item 203.20, Common Excavation. See Cross Sections for approximate limits. The Resident may adjust the grubbing limits to minimize slope disturbances.
2. Excavation for benching to receive embankments is incidental to Item 203.20, Common Excavation.
3. Benching is required where fill is to be placed on existing embankments with slopes steeper than 2:1.

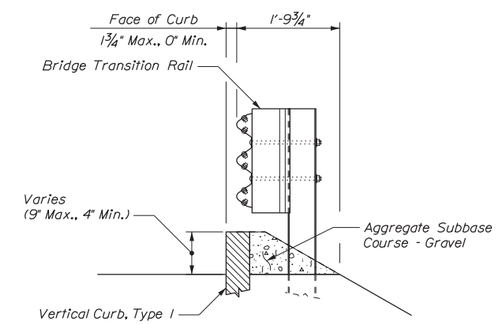

TYPICAL SECTION AT BRIDGE TRANSITION RAIL

Scale: 3/4" = 1'-0"

1 3
3/4" = 1'-0"
1 0 7
3/8" = 1'-0"

Date:12/31/2015

Filename: ...\cad\st\planset\005_std_01.dgn

Scale: AS NOTED

No.	Revision	By	Date

Designed by: vhb

CONSULTANT PROJECT MANAGER: T. Bryant

	By	Date		By	Date
Designed	CLC	12/2015	Checked	ECF	12/2015
Drawn	CLC	12/2015	In Charge of	TSB	12/2015

VANASSE HANGEN BRUSTLIN, INC.
500 Southborough Dr.
Suite 105B
South Portland, ME 04106
TEL (207) 889-3150
FAX (207) 253-5596

MAINE TURNPIKE

THE GOLD STAR MEMORIAL HIGHWAY

MTA PROJECT MANAGER: Ralph Norwood, IV

SUPERSTRUCTURE REPLACEMENT
MAPLE STREET UNDERPASS

TYPICAL DETAILS (1 OF 2)

VHB: 55068.00 SHEET NUMBER: 5
CONTRACT: 2016.04 5 OF 70

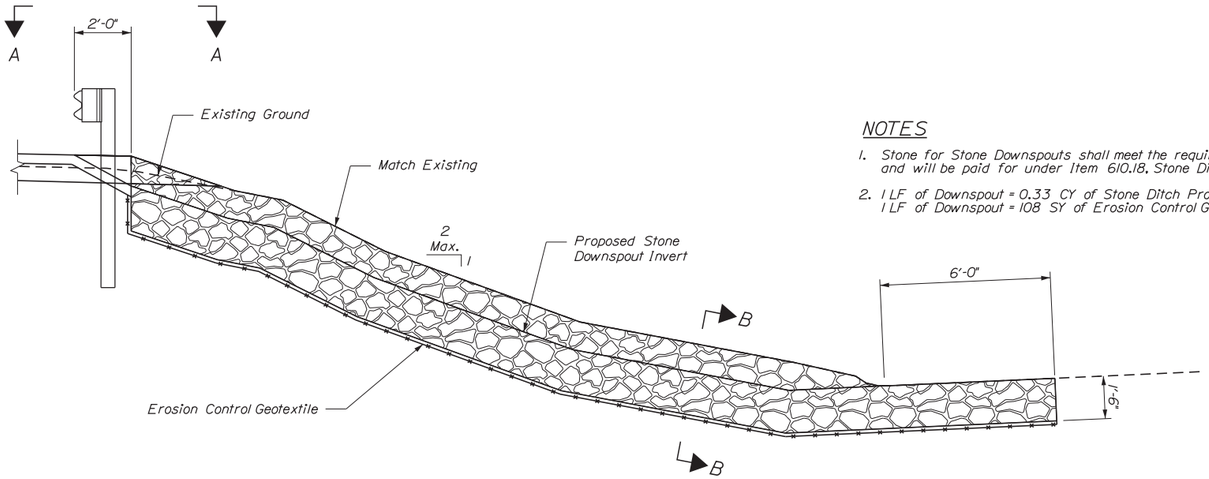

STONE DOWNSPOUT ELEVATION
Scale: 3/8" = 1'-0"

NOTES

1. Stone for Stone Downspouts shall meet the requirements of MaineDOT Specification 703.29, and will be paid for under Item 610.18, Stone Ditch Protection.
2. 1 LF of Downspout = 0.33 CY of Stone Ditch Protection
   1 LF of Downspout = 108 SY of Erosion Control Geotextile Fabric

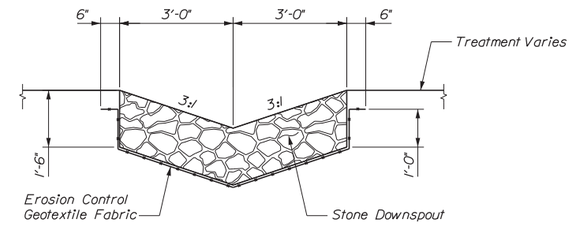

SECTION B-B
Scale: 1/2" = 1'-0"

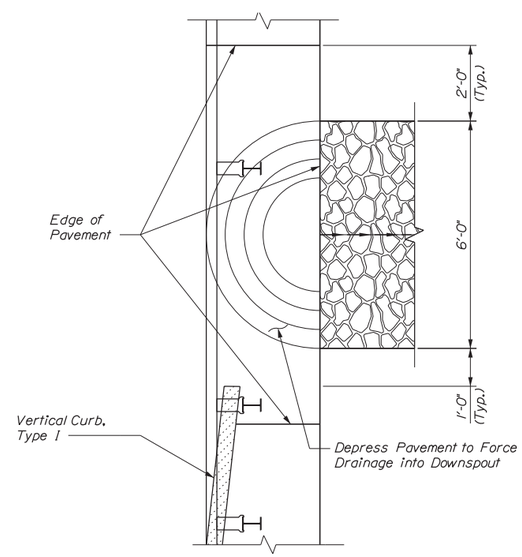

VIEW A-A
Scale: 1/2" = 1'-0"

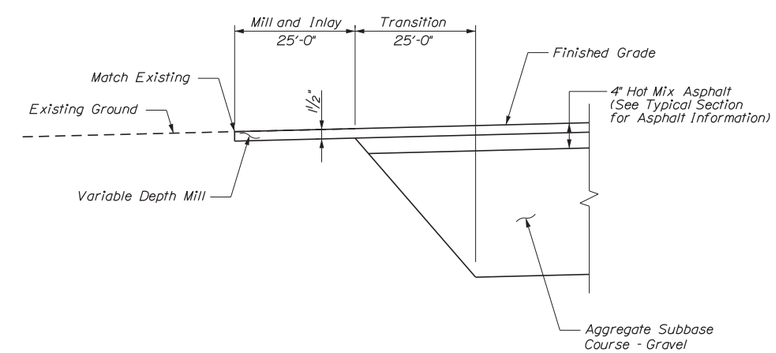

MILL AND INLAY DETAIL
(Longitudinal Section)
Not to Scale

1 0 5
1/2" = 1'-0"
1 0 7
3/8" = 1'-0"

Scale: AS NOTED

No.	Revision	By	Date

Designed by: vhb

CONSULTANT PROJECT MANAGER: T. Bryant

	By	Date		By	Date
Designed	CLC	12/2015	Checked	ECF	12/2015
Drawn	CLC	12/2015	In Charge of	TSB	12/2015

VANASSE HANGEN BRUSTLIN, INC.
500 Southborough Dr.
Suite 105B
South Portland, ME 04106
TEL (207) 889-3150
FAX (207) 253-5596

MAINE TURNPIKE

THE GOLD STAR MEMORIAL HIGHWAY

MTA PROJECT MANAGER: Ralph Norwood, IV

SUPERSTRUCTURE REPLACEMENT
MAPLE STREET UNDERPASS

TYPICAL DETAILS (2 OF 2)

VHB: 55068.00
CONTRACT: 2016.04

SHEET NUMBER: 6
6 OF 70

Date: 12/31/2015
Filename: ...\cad\st\planset\006_std_02.dgn

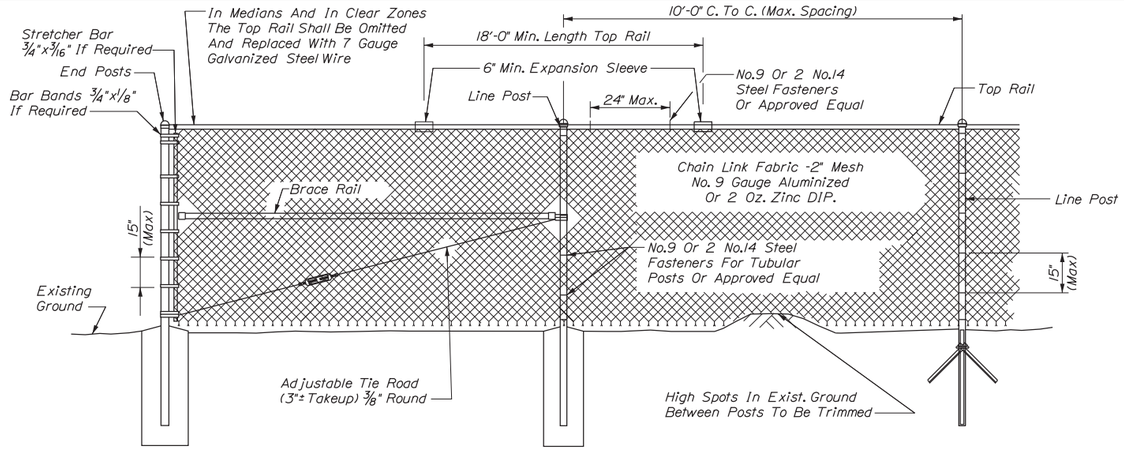

TYPICAL TYPE I END PANEL
N.T.S.

TYPICAL INTERMEDIATE PANEL
N.T.S.

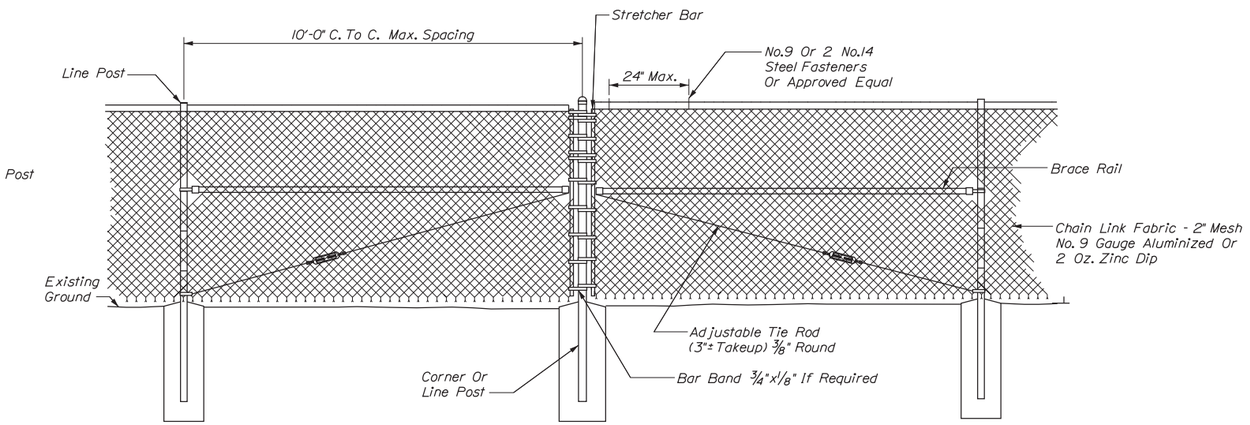

TYPICAL TYPE II BRACE PANEL
N.T.S.

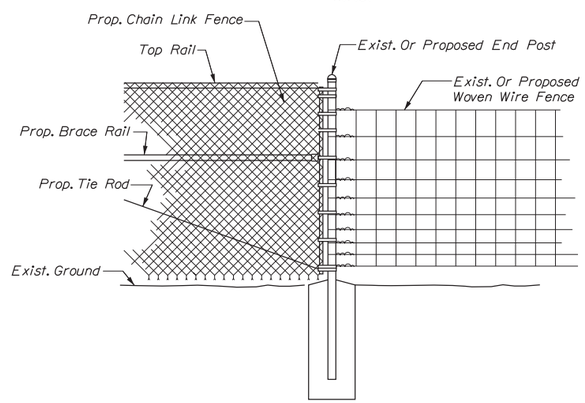

METHOD OF ATTACHING CHAIN LINK FENCE TO WOVEN WIRE FENCE
N.T.S.

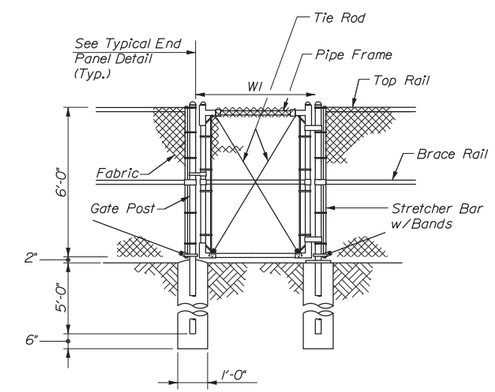

SINGLE GATE

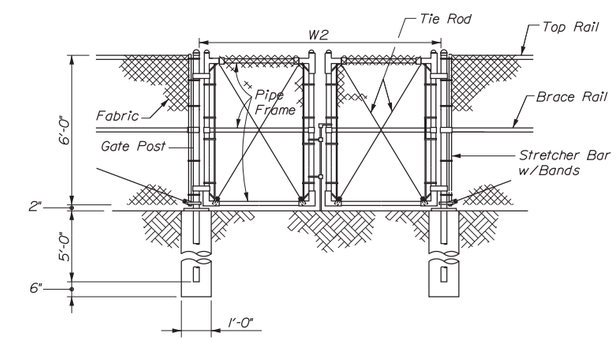

DOUBLE GATE

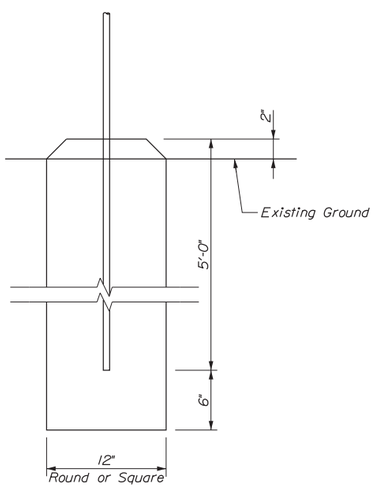

BRACE, GATE AND END POST BASE DETAIL
N.T.S.

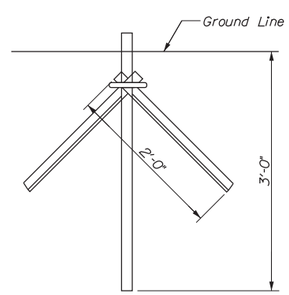

LINE POST DRIVE ANCHOR DETAIL
N.T.S.

Gate Width		Gate Post
W1	W2	O.D.
to 6'	to 12'	3"
6' to 12'	12' to 24'	4"
12' to 18'	24' to 36'	6"

Bending moments based on grade 1 (schedule 40 steel)

Chain Link Fence	Shape	Nominal Size (Inches)	Bending Moment* (lbs.-in.)
End & Corner Posts	ϕ	2 I.D.	14,025
Line Posts	ϕ	1-1/2 I.D.	8,150
Top & Brace Rails	ϕ	1-1/4 I.D.	5,875

* Material for grade 2 end, corner & line posts and top & brace rails must meet or exceed bending moments for grade 1 steel as noted above.

NOTES

1. Brace panels shall be installed where the change in grade between any three posts exceeds 15 percent.
2. No additional payment will be made for longer posts necessitated by large grade differential.
3. Type I bracing will be used at fence ends. Type II bracing will be used at corner posts.
4. When ledge is encountered, steel posts shall be set and grouted 12" deep unless the posts penetrate the ground to the depth indicated on the drawings.
5. Concrete for post foundation shall be Class B.
6. Brace, gate and end posts shall be set in concrete.
7. Chain link fence shall be installed with barbs down.
8. All components of chain link fence shall be in accordance with AASHTO M181.

Scale: AS NOTED

No.	Revision	By	Date

Designed by: vhb

CONSULTANT PROJECT MANAGER: T. Bryant

	By	Date		By	Date
Designed	MED	12/2015	Checked	GME	12/2015
Drawn	CMD	12/2015	In Charge of	TSB	12/2015

VANASSE HANGEN BRUSTLIN, INC.
500 Southborough Dr.
Suite 105B
South Portland, ME 04106
TEL (207) 889-3150
FAX (207) 253-5596

MAINE TURNPIKE

THE GOLD STAR MEMORIAL HIGHWAY

MTA PROJECT MANAGER: Ralph Norwood, IV

SUPERSTRUCTURE REPLACEMENT
MAPLE STREET UNDERPASS

FENCING DETAILS

VHB: 55068.00
CONTRACT: 2016.04

SHEET NUMBER: 7

Date: 12/31/2015
Filename: ...\cad\st\planset\007_std_03.dgn

Date:12/31/2015

Limits of Milling	SY
Sta. 207+50 to Sta. 207+75	74.5

Item 627.712 4" White or Yellow Pavement Marking Line Type LF	
Sta. 207+50 to Sta. 213+80	DYCL 630

Item 606.79 Guardrail 350Flared Terminal	EA
Sta. 207+46.5, RT to Sta. 207+83.8, RT	1

Item 606.247 Guardrail Type 3d - Single Rail, 7' Posts	LF
Sta. 207+39.8, LT to Sta. 208+58.6, LT	118.75
Sta. 207+83.8, RT to Sta. 208+58.6, RT	75

Item 606.1728 W Beam to 3 Bar Bridge Transition	EA
Sta. 208+58.6, LT to Sta. 208+78.3, LT	1
Sta. 208+58.6, RT to Sta. 208+78.3, RT	1

Item 609.11 Vertical Curb, Type 1	LF
Sta. 208+53.8, LT to Sta. 208+87.8, LT	34.0
Sta. 208+50.8, RT to Sta. 208+87.8, RT	37.0

Item 610.18 Stone Ditch Protection
Sta. 208+50.0, LT 15.0' - LT 56.5'
Sta. 208+47.0, RT 15.0' - RT 42.9'

Item 607.17 Chain Link Fence - 6 Foot	LF
Sta. 208+49.6, LT 59.5' to Sta. 209+00.0, LT 59.5'	50.4
Sta. 209+00.0, LT 15.0' to Sta. 209+00.0, LT 59.5'	44.5
Sta. 208+50.3, RT 48.0' to Sta. 209+00.0, RT 48.0'	49.7
Sta. 209+00.0, RT 15.0' to Sta. 209+00.0, RT 48.0'	33.0

Item 607.23 Chain Link Fence Gate	EA
West Approach	1

CURVE DATA #1
PI = 205+09.39
D = 2°12'13.3"
Δ = 8°04'33.9" Lt.
R = 2600.00'
L = 366.48'
T = 183.54'
E = 6.47'

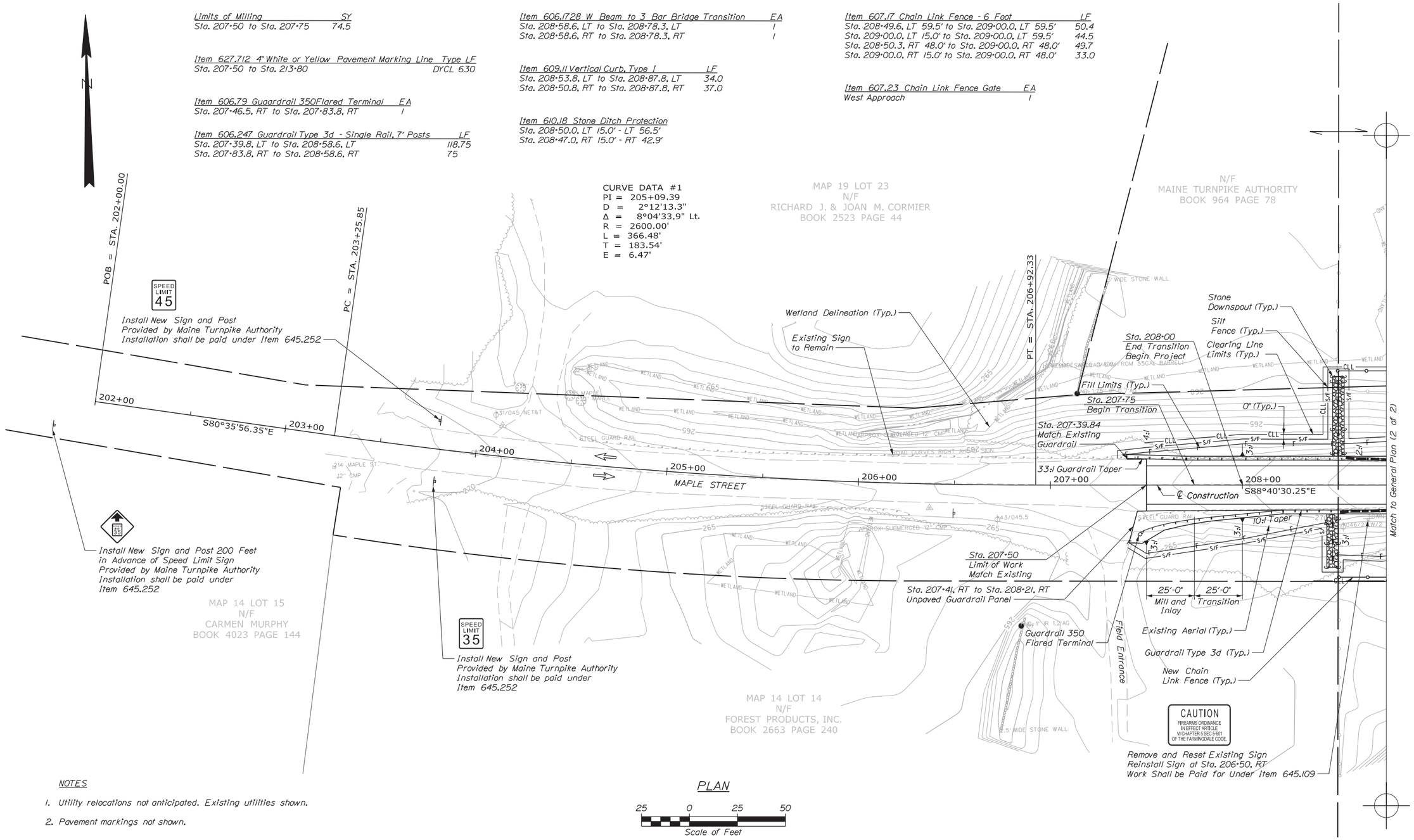

NOTES

1. Utility relocations not anticipated. Existing utilities shown.
2. Pavement markings not shown.

PLAN

25 0 25 50
Scale of Feet

Filename: ...\cad\st\planset\008_Plan_01.dgn

Scale:

No.	Revision	By	Date

Designed by:

vhb

CONSULTANT PROJECT MANAGER: T. Bryant

	By	Date		By	Date
Designed	CLC	12/2015	Checked	ECF	12/2015
Drawn	CLC	12/2015	In Charge of	TSB	12/2015

VANASSE HANGEN BRUSTLIN, INC.
500 Southborough Dr.
Suite 105B
South Portland, ME 04106
TEL (207) 889-3150
FAX (207) 253-5596

MAINE TURNPIKE

THE GOLD STAR MEMORIAL HIGHWAY

MTA PROJECT MANAGER: Ralph Norwood, IV

SUPERSTRUCTURE REPLACEMENT
MAPLE STREET UNDERPASS

GENERAL PLAN (1 OF 2)

VHB: 55068.00
CONTRACT: 2016.04

SHEET NUMBER: 8

Date:12/31/2015

Limits of Milling	SY
Sta. 213+55 to Sta. 213+80	60.5

Item 606.79 Guardrail 350 Faired Terminal	EA
Sta. 212+03.7, LT to Sta. 212+41.4, LT	1
Sta. 214+38.3, RT to Sta. 214+74.9, RT	1

Item 606.247 Guardrail Type 3d - Single Rail, 7' Posts	LF
Sta. 211+41.4, LT 13.0' to Sta. 212+03.7, LT 17.2'	62.5
Sta. 211+41.4, RT to Sta. 214+38.3, RT	300

Item 607.17 Chain Link Fence - 6 Foot	LF
Sta. 211+00.0, LT 15.0' to Sta. 211+00.0, LT 54.0'	39.0
Sta. 211+00.0, LT 54.0' to Sta. 211+49.9, LT 54.0'	49.9
Sta. 211+00.0, RT 15.0' to Sta. 211+00.0, RT 52.0'	37.0
Sta. 211+00.0, RT 52.0' to Sta. 211+49.8, RT 52.0'	49.8

Item 607.23 Chain Link Fence Gate	EA
East Approach	1

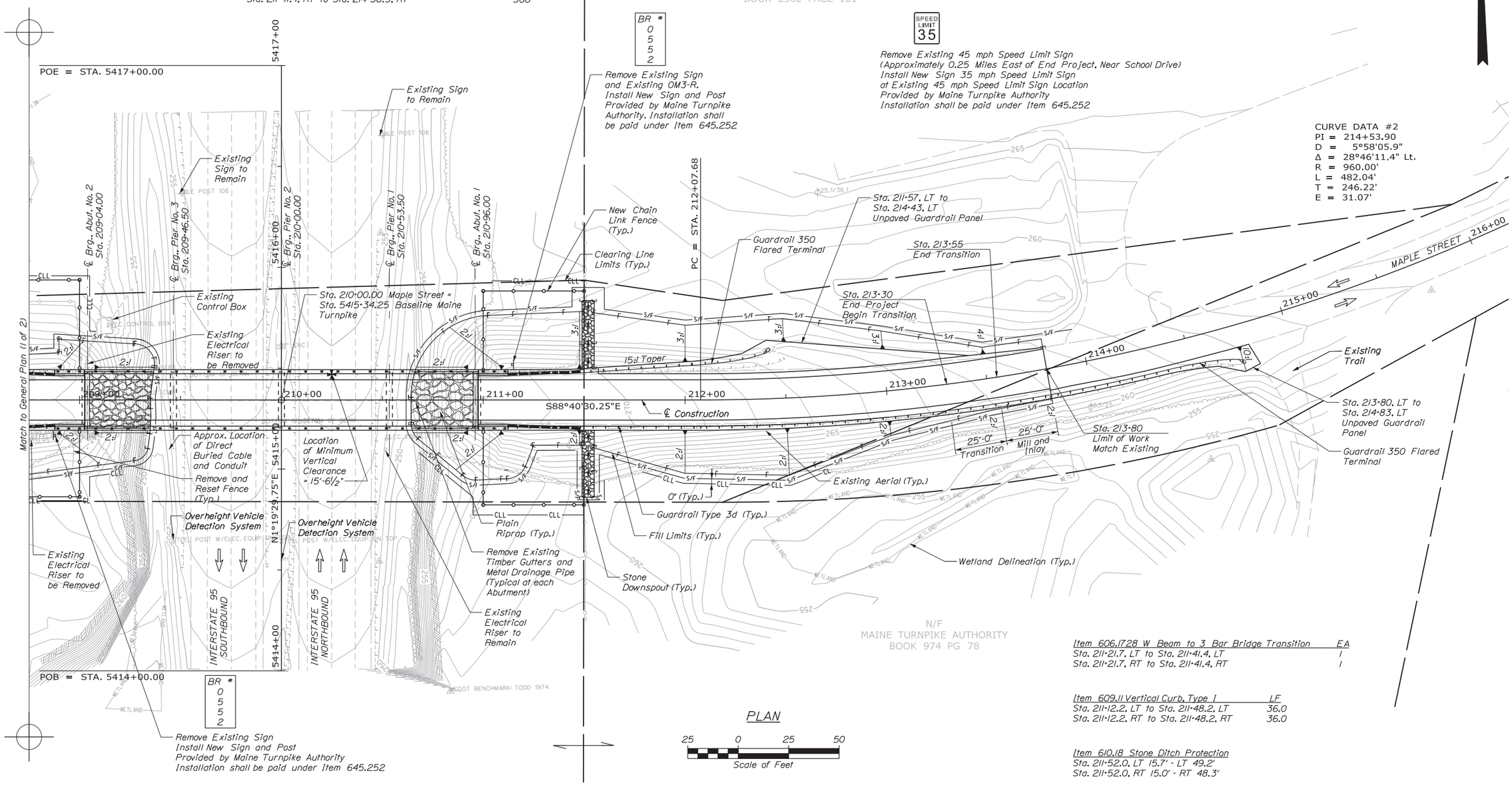

Item 606.1728 W Beam to 3 Bar Bridge Transition	EA
Sta. 211+21.7, LT to Sta. 211+41.4, LT	1
Sta. 211+21.7, RT to Sta. 211+41.4, RT	1

Item 609.11 Vertical Curb, Type I	LF
Sta. 211+12.2, LT to Sta. 211+48.2, LT	36.0
Sta. 211+12.2, RT to Sta. 211+48.2, RT	36.0

Item 610.18 Stone Ditch Protection
Sta. 211+52.0, LT 15.7' - LT 49.2'
Sta. 211+52.0, RT 15.0' - RT 48.3'

Scale:

No.	Revision	By	Date

Designed by:

vhb

CONSULTANT PROJECT MANAGER: T. Bryant

	By	Date		By	Date
Designed	CLC	12/2015	Checked	ECF	12/2015
Drawn	CLC	12/2015	In Charge of	TSB	12/2015

VANASSE HANGEN BRUSTLIN, INC.
500 Southborough Dr.
Suite 105B
South Portland, ME 04106
TEL (207) 889-3150
FAX (207) 253-5596

MAINE TURNPIKE

THE GOLD STAR MEMORIAL HIGHWAY

MTA PROJECT MANAGER: Ralph Norwood, IV

SUPERSTRUCTURE REPLACEMENT MAPLE STREET UNDERPASS

GENERAL PLAN (2 OF 2)

VHB: 55068.00 SHEET NUMBER: 9

CONTRACT: 2016.04 9 OF 70

Filename: ...\cad\st\planset\009_Plan_02.dgn

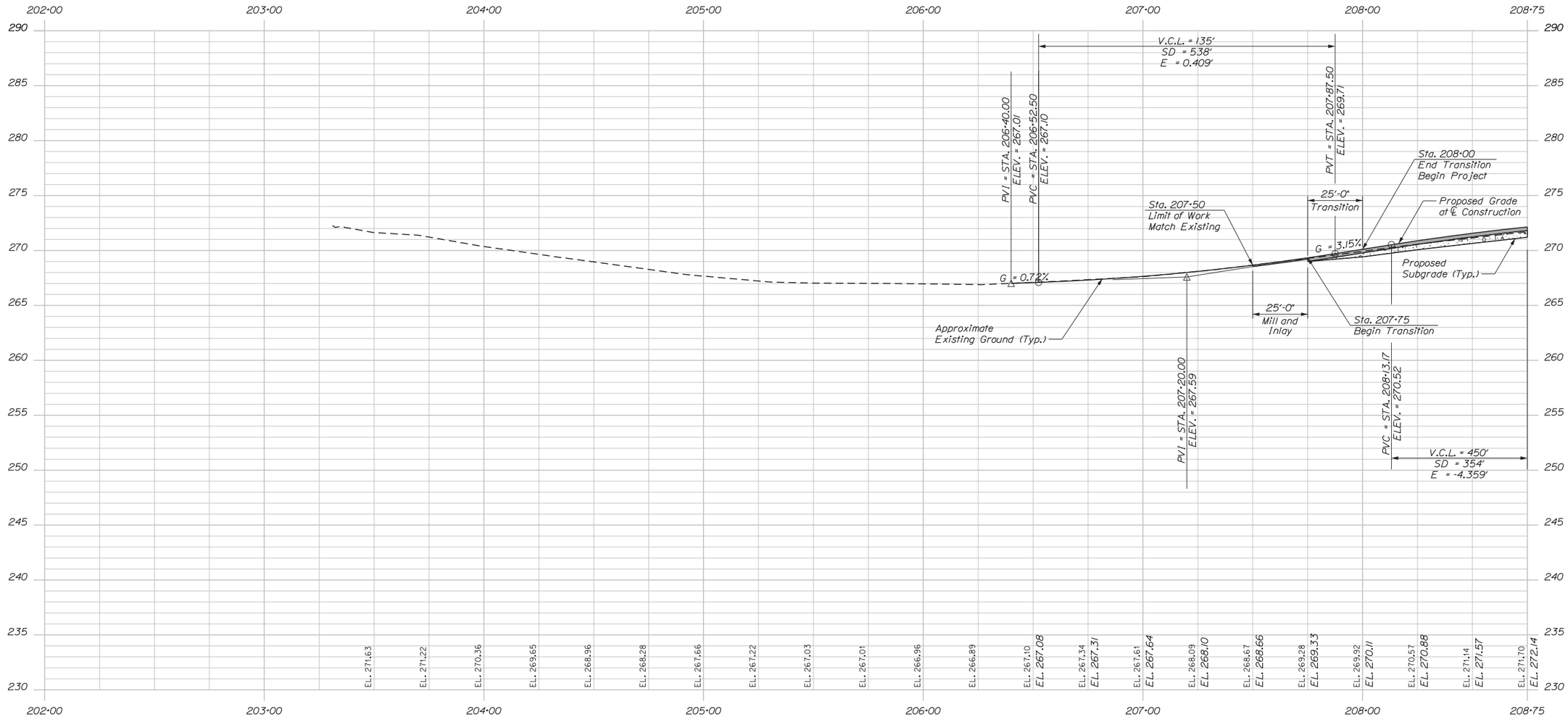

MAPLE STREET UNDERPASS PROFILE

Horiz. 25 0 25 50

Vert. 5 0 5 10

Scale of Feet

Date:12/31/2015

Filename: ...\st\planset\010_Profile_01.dgn

Scale:

No.	Revision	By	Date

Designed by:

vhb

CONSULTANT PROJECT MANAGER: T. Bryant

	By	Date		By	Date
Designed	CLC	12/2015	Checked	ECF	12/2015
Drawn	CLC	12/2015	In Charge of	TSB	12/2015

VANASSE HANGEN BRUSTLIN, INC.
500 Southborough Dr.
Suite 105B
South Portland, ME 04106
TEL (207) 889-3150
FAX (207) 253-5596

MAINE TURNPIKE

THE GOLD STAR MEMORIAL HIGHWAY

MTA PROJECT MANAGER: Ralph Norwood, IV

SUPERSTRUCTURE REPLACEMENT
MAPLE STREET UNDERPASS

PROFILE (1 OF 2)

VHB: 55068.00

CONTRACT: 2016.04

SHEET NUMBER: 10

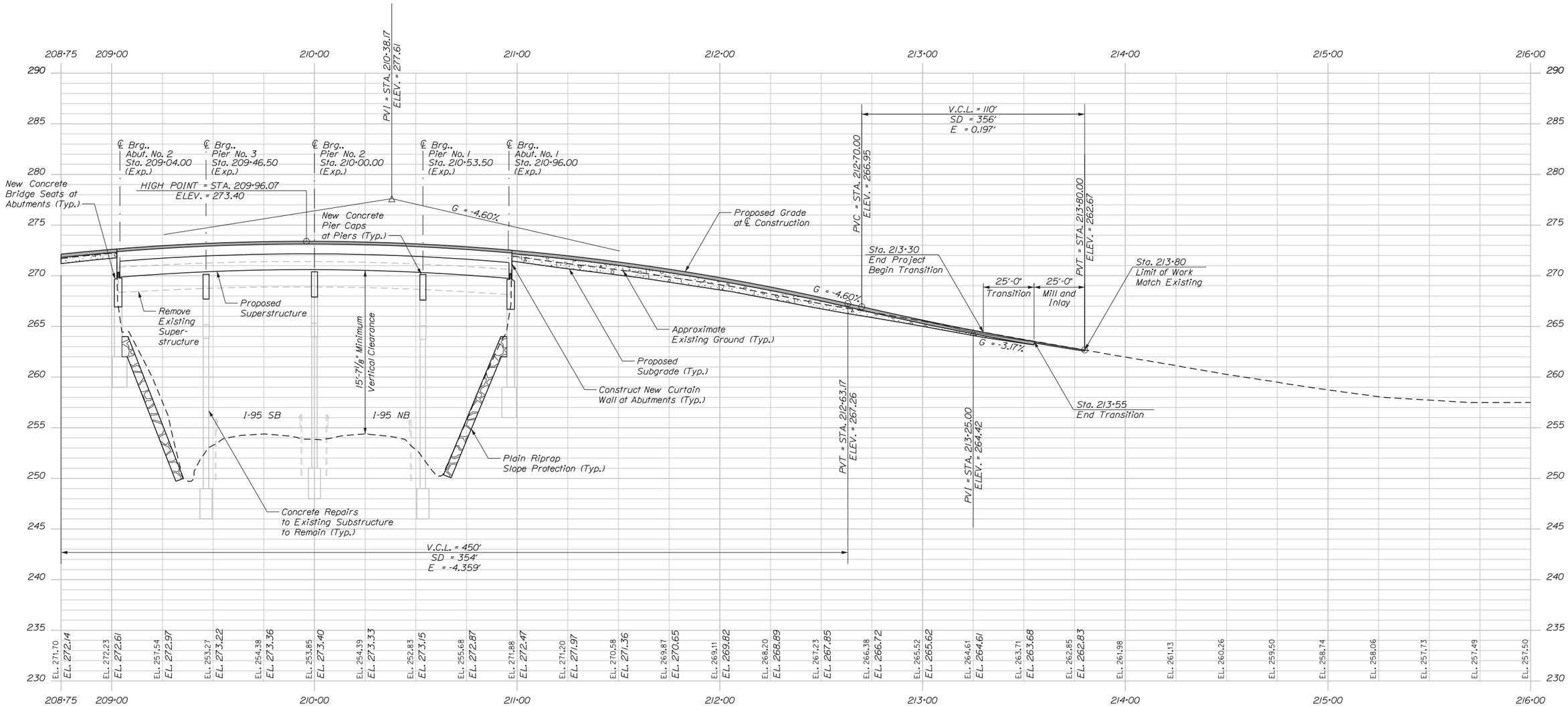

MAPLE STREET UNDERPASS PROFILE

Horiz. 25 0 25 50

Vert. 5 0 5 10

Scale of Feet

Date:12/31/2015

Filename: ...\st\planset\011_Profile_02.dgn

Scale:

No.	Revision	By	Date

Designed by:

vhb

CONSULTANT PROJECT MANAGER: T. Bryant

	By	Date		By	Date
Designed	CLC	12/2015	Checked	ECF	12/2015
Drawn	CLC	12/2015	In Charge of	TSB	12/2015

VANASSE HANGEN BRUSTLIN, INC.
500 Southborough Dr.
Suite 105B
South Portland, ME 04106
TEL (207) 889-3150
FAX (207) 253-5596

MAINE TURNPIKE

THE GOLD STAR MEMORIAL HIGHWAY

MTA PROJECT MANAGER: Ralph Norwood, IV

SUPERSTRUCTURE REPLACEMENT
MAPLE STREET UNDERPASS

PROFILE (2 OF 2)

VHB: 55068.00

CONTRACT: 2016.04

SHEET NUMBER: 11

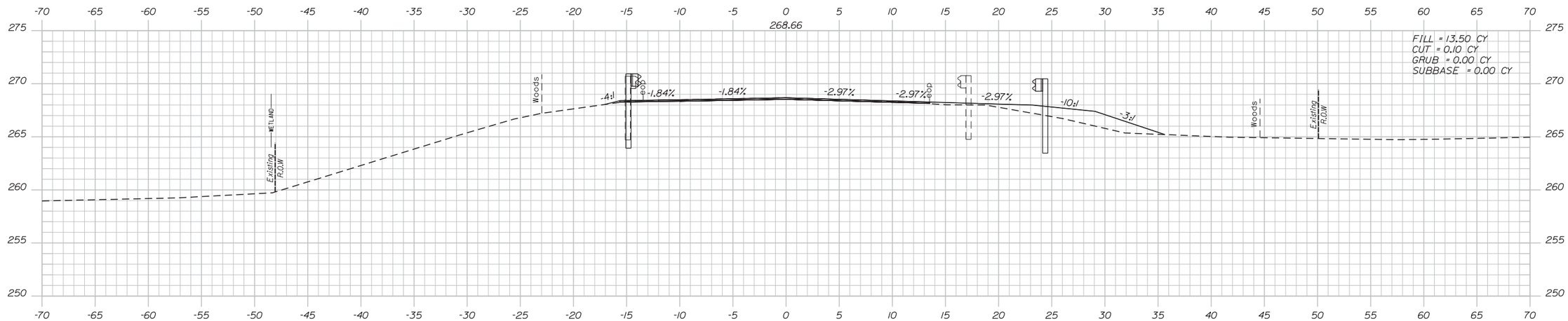

207+50.00

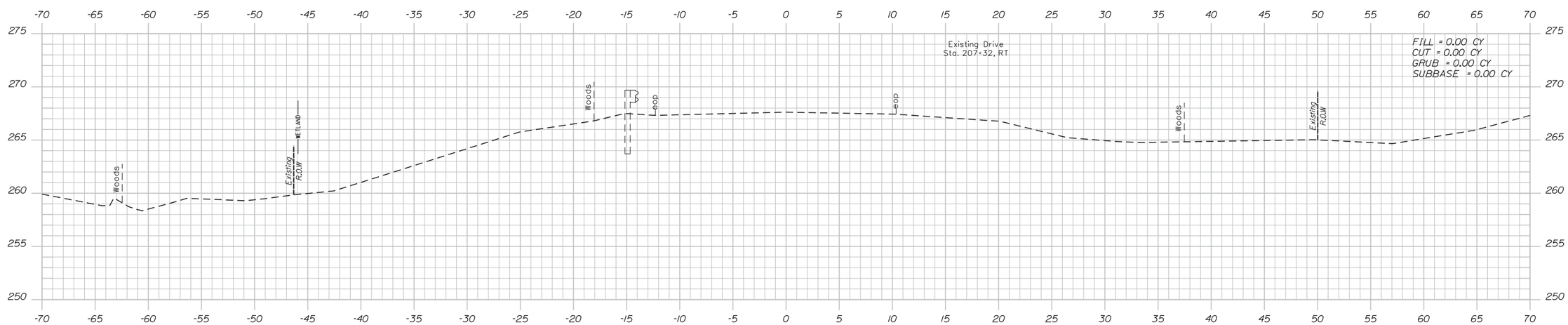

207+00.00

Date:12/31/2015

Filename: ...\planset\012_Xsect_207+00.dgn

Scale: 5 0 5 10
1" = 5'-0"

No.	Revision	By	Date

Designed by:

vhb

CONSULTANT PROJECT MANAGER: T. Bryant

	By	Date		By	Date
Designed	CLC	12/2015	Checked	ECF	12/2015
Drawn	CLC	12/2015	In Charge of	TSB	12/2015

VANASSE HANGEN BRUSTLIN, INC.
500 Southborough Dr.
Suite 105B
South Portland, ME 04106
TEL (207) 889-3150
FAX (207) 253-5596

MAINE TURNPIKE

THE GOLD STAR MEMORIAL HIGHWAY

MTA PROJECT MANAGER: Ralph Norwood, IV

SUPERSTRUCTURE REPLACEMENT
MAPLE STREET UNDERPASS

CROSS SECTIONS
STA. 207+00 TO STA. 207+50

VHB: 55068.00
CONTRACT: 2016.04

SHEET NUMBER: 12

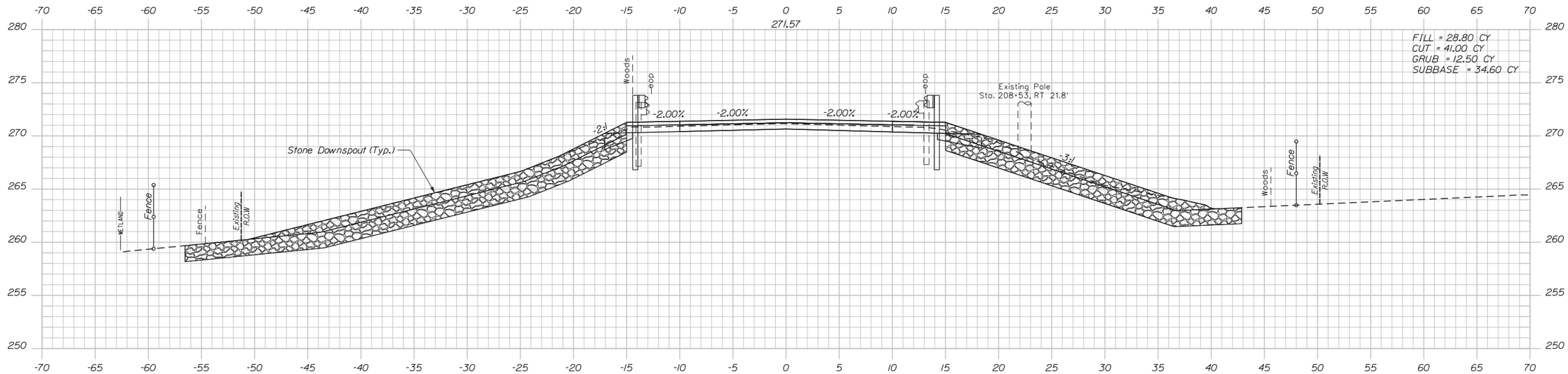

208+50.00

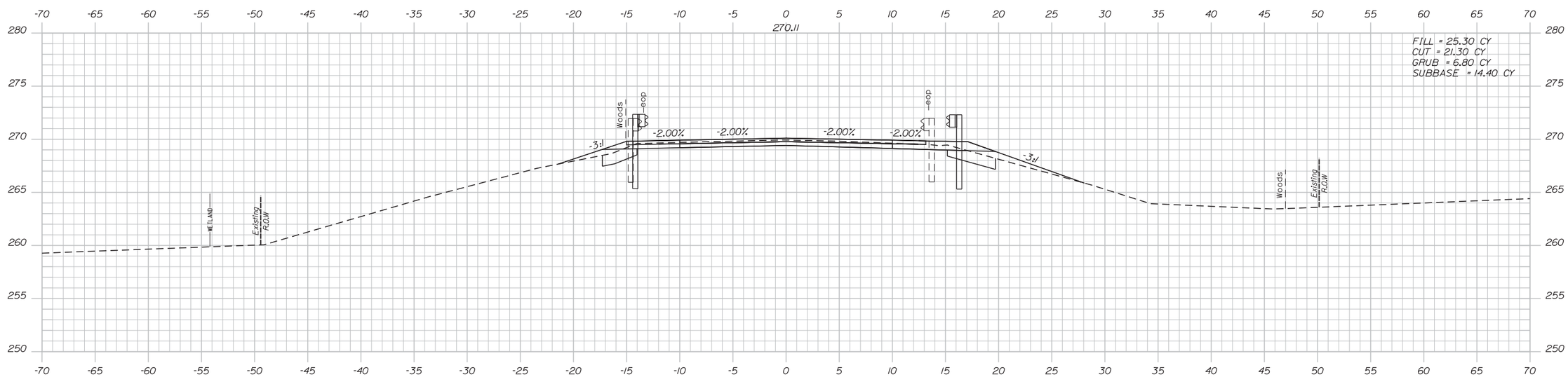

208+00.00

Date:12/31/2015

Filename: ...\plansetV013_Xsect_208+00.dgn

Scale: 5 0 5 10
1" = 5'-0"

No.	Revision	By	Date

Designed by:

vhb

CONSULTANT PROJECT MANAGER: T. Bryant

	By	Date		By	Date
Designed	CLC	12/2015	Checked	ECF	12/2015
Drawn	CLC	12/2015	In Charge of	TSB	12/2015

VANASSE HANGEN BRUSTLIN, INC.
500 Southborough Dr.
Suite 105B
South Portland, ME 04106
TEL (207) 889-3150
FAX (207) 253-5596

MAINE TURNPIKE

THE GOLD STAR MEMORIAL HIGHWAY

MTA PROJECT MANAGER: Ralph Norwood, IV

SUPERSTRUCTURE REPLACEMENT
MAPLE STREET UNDERPASS

CROSS SECTIONS
STA. 208+00 TO STA. 208+50

VHB: 55068.00 SHEET NUMBER: 13

CONTRACT: 2016.04

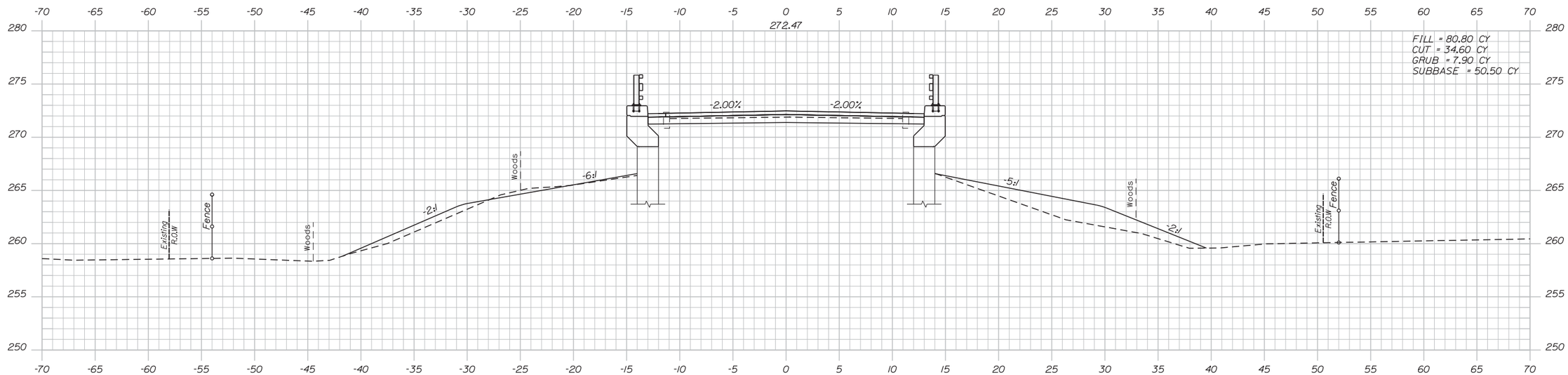

211+00.00

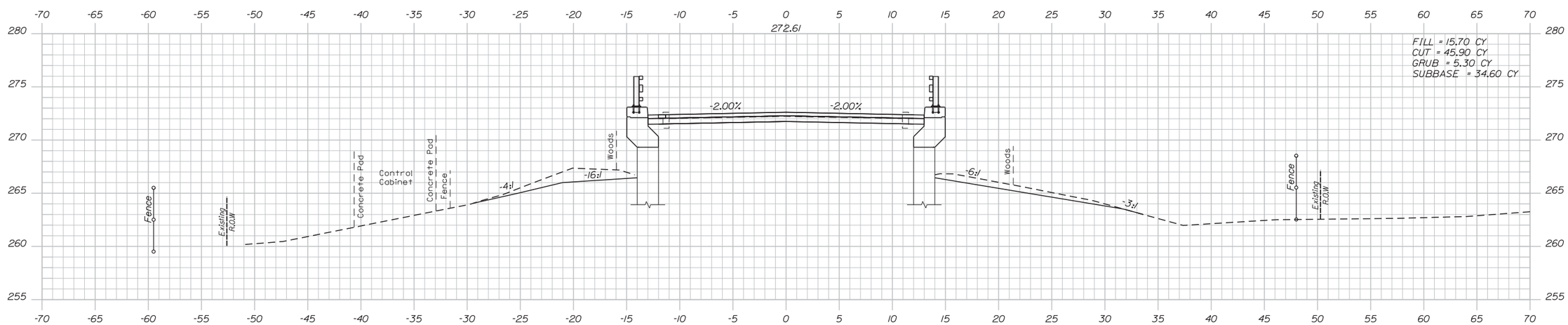

209+00.00

Date:12/31/2015

Filename: ...\planset\014_Xsect_209+00.dgn

Scale: 5 0 5 10
1" = 5'-0"

No.	Revision	By	Date

Designed by: vhb

CONSULTANT PROJECT MANAGER: T. Bryant

	By	Date		By	Date
Designed	CLC	12/2015	Checked	ECF	12/2015
Drawn	CLC	12/2015	In Charge of	TSB	12/2015

VANASSE HANGEN BRUSTLIN, INC.
500 Southborough Dr.
Suite 105B
South Portland, ME 04106
TEL (207) 889-3150
FAX (207) 253-5596

MAINE TURNPIKE

THE GOLD STAR MEMORIAL HIGHWAY

MTA PROJECT MANAGER: Ralph Norwood, IV

SUPERSTRUCTURE REPLACEMENT
MAPLE STREET UNDERPASS

CROSS SECTIONS
STA. 209+00 TO STA. 211+00

VHB: 55068.00
CONTRACT: 2016.04

SHEET NUMBER: 14

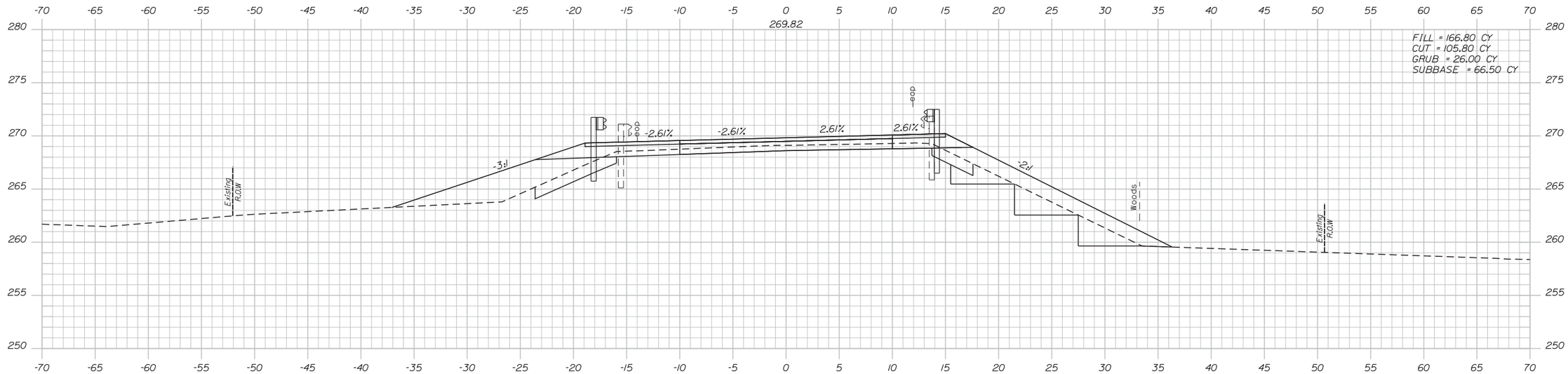

212+00.00

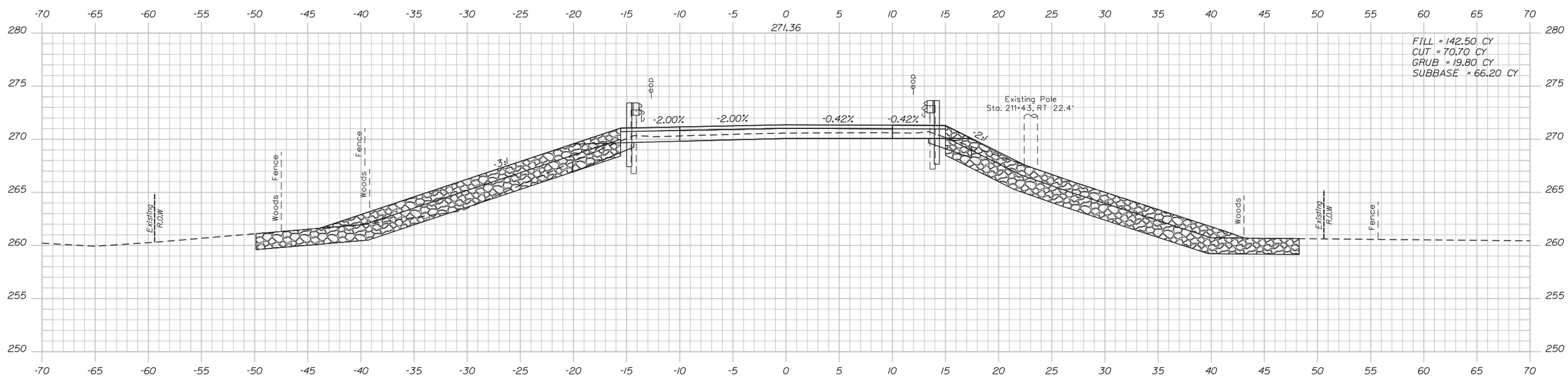

211+50.00

Date:12/31/2015

Filename: ...\planset\015_Xsect_211+50.dgn

Scale: 5 0 5 10
1" = 5'-0"

No.	Revision	By	Date

Designed by:

vhb

CONSULTANT PROJECT MANAGER: T. Bryant

	By	Date		By	Date
Designed	CLC	12/2015	Checked	ECF	12/2015
Drawn	CLC	12/2015	In Charge of	TSB	12/2015

VANASSE HANGEN BRUSTLIN, INC.
500 Southborough Dr.
Suite 105B
South Portland, ME 04106
TEL (207) 889-3150
FAX (207) 253-5596

MAINE TURNPIKE

THE GOLD STAR MEMORIAL HIGHWAY

MTA PROJECT MANAGER: Ralph Norwood, IV

SUPERSTRUCTURE REPLACEMENT MAPLE STREET UNDERPASS

CROSS SECTIONS
STA. 211+50 TO STA. 212+00

VHB: 55068.00

SHEET NUMBER: 15

CONTRACT: 2016.04

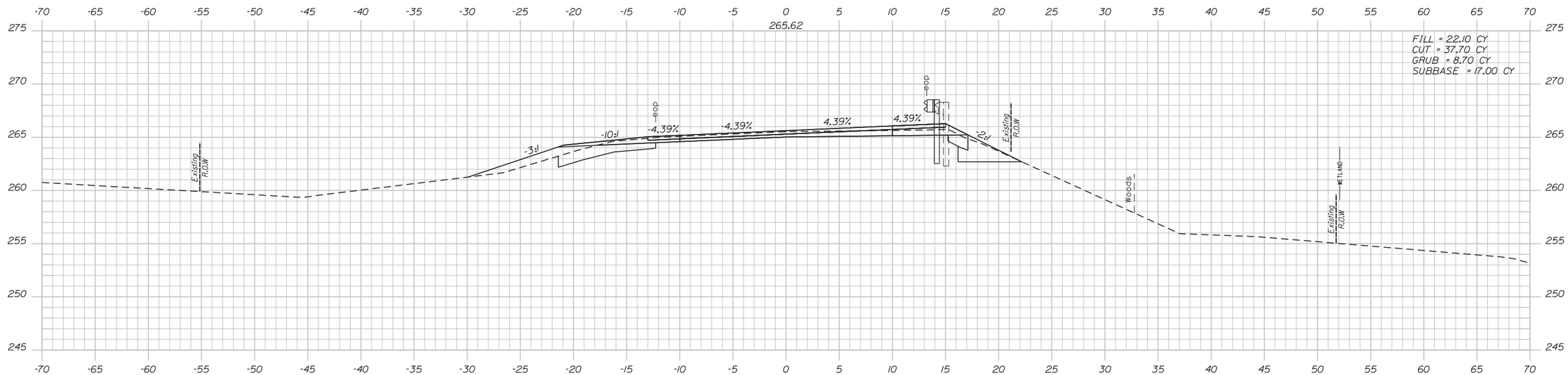

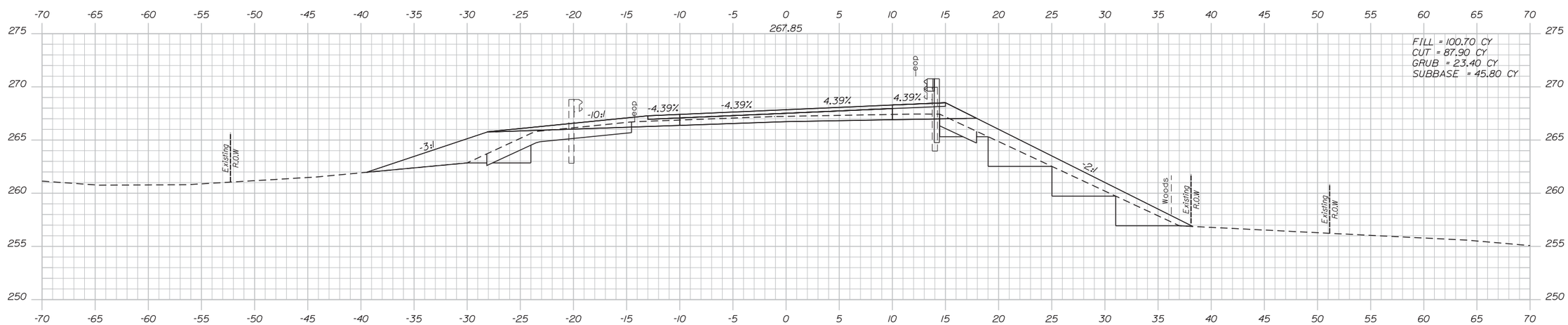

Date:12/31/2015

Filename: ...\planset\016_Xsect_212+50.dgn

Scale: 5 0 5 10
1" = 5'-0"

No.	Revision	By	Date

Designed by: vhb

CONSULTANT PROJECT MANAGER: T. Bryant

	By	Date		By	Date
Designed	CLC	12/2015	Checked	ECF	12/2015
Drawn	CLC	12/2015	In Charge of	TSB	12/2015

VANASSE HANGEN BRUSTLIN, INC.
500 Southborough Dr.
Suite 105B
South Portland, ME 04106
TEL (207) 889-3150
FAX (207) 253-5596

MAINE TURNPIKE

THE GOLD STAR MEMORIAL HIGHWAY

MTA PROJECT MANAGER: Ralph Norwood, IV

SUPERSTRUCTURE REPLACEMENT
MAPLE STREET UNDERPASS

CROSS SECTIONS
STA. 212+50 TO STA. 213+00

VHB: 55068.00
CONTRACT: 2016.04

SHEET NUMBER: 16

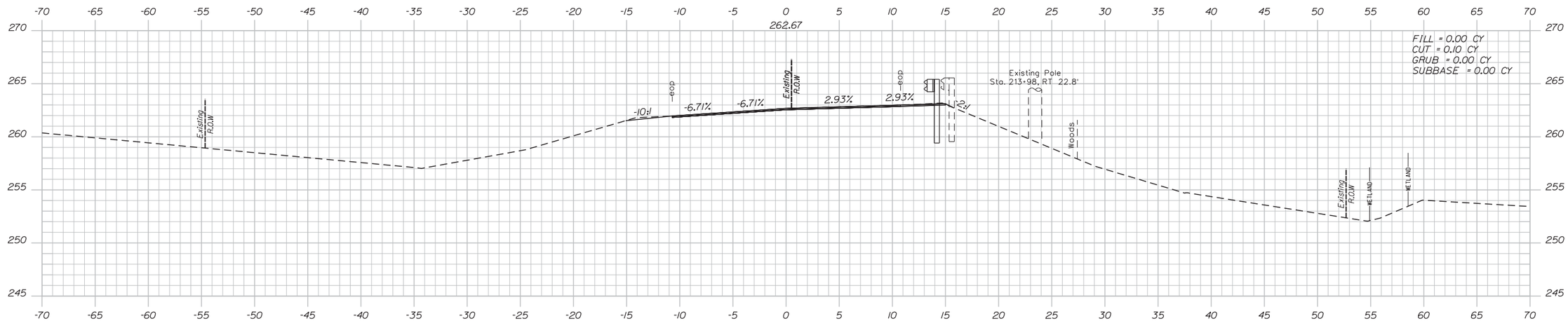

213+80.00

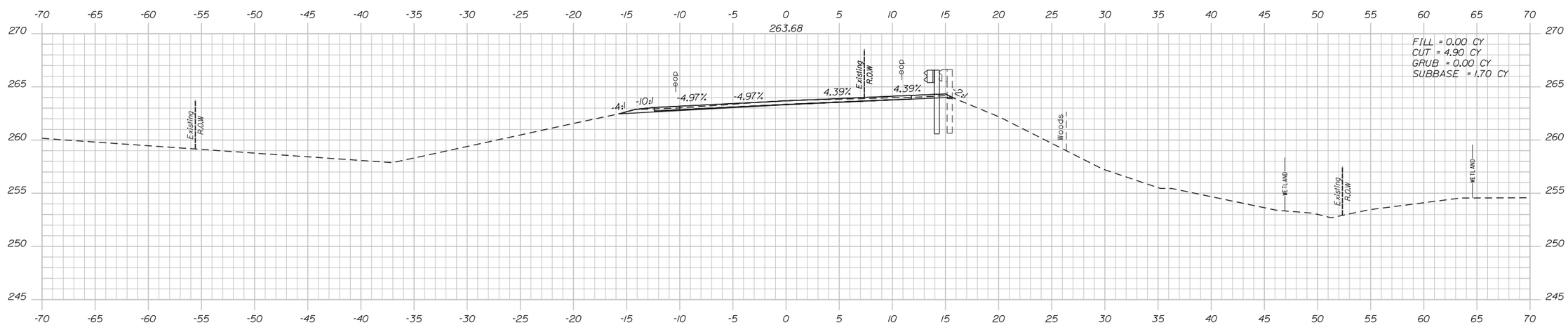

213+50.00

Scale: 5 0 5 10
1" = 5'-0"

No.	Revision	By	Date

Designed by: vhb

CONSULTANT PROJECT MANAGER: T. Bryant

	By	Date		By	Date
Designed	CLC	12/2015	Checked	ECF	12/2015
Drawn	CLC	12/2015	In Charge of	TSB	12/2015

VANASSE HANGEN BRUSTLIN, INC.
500 Southborough Dr.
Suite 105B
South Portland, ME 04106
TEL (207) 889-3150
FAX (207) 253-5596

MAINE TURNPIKE

THE GOLD STAR MEMORIAL HIGHWAY

MTA PROJECT MANAGER: Ralph Norwood, IV

SUPERSTRUCTURE REPLACEMENT MAPLE STREET UNDERPASS

CROSS SECTIONS
STA. 213+50 TO STA. 213+80

VHB: 55068.00
CONTRACT: 2016.04

SHEET NUMBER: 17

Date: 12/31/2015

Filename: ...\planset\017_Xsect_213+50.dgn

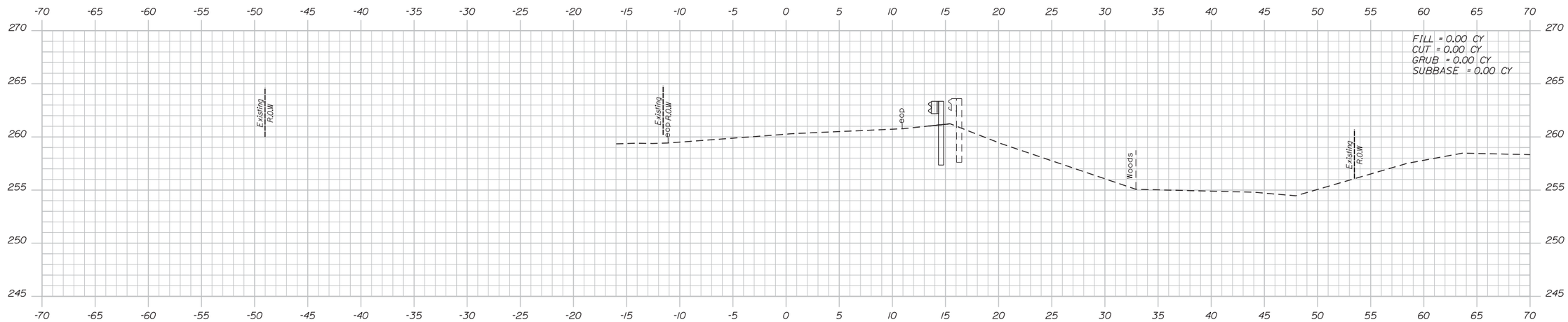

214+50.00

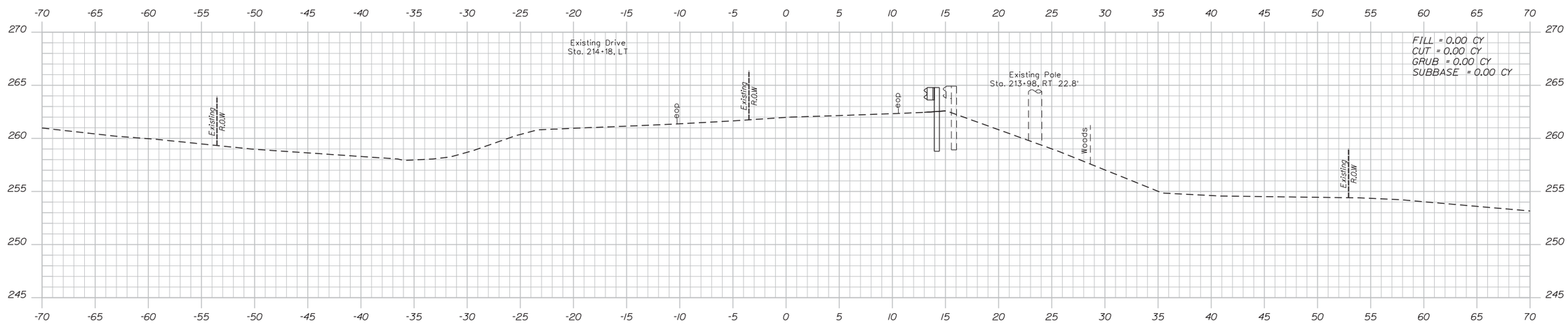

214+00.00

Date:12/31/2015

Filename: ...\planset\018_Xsect_214+00.dgn

Scale: 5 0 5 10
1" = 5'-0"

No.	Revision	By	Date

Designed by: vhb

CONSULTANT PROJECT MANAGER: T. Bryant

	By	Date		By	Date
Designed	CLC	12/2015	Checked	ECF	12/2015
Drawn	CLC	12/2015	In Charge of	TSB	12/2015

VANASSE HANGEN BRUSTLIN, INC.
500 Southborough Dr.
Suite 105B
South Portland, ME 04106
TEL (207) 889-3150
FAX (207) 253-5596

MAINE TURNPIKE

THE GOLD STAR MEMORIAL HIGHWAY

MTA PROJECT MANAGER: Ralph Norwood, IV

SUPERSTRUCTURE REPLACEMENT MAPLE STREET UNDERPASS

CROSS SECTIONS
STA. 214+00 TO STA. 214+50

VHB: 55068.00
CONTRACT: 2016.04

SHEET NUMBER: 18

Date:12/31/2015

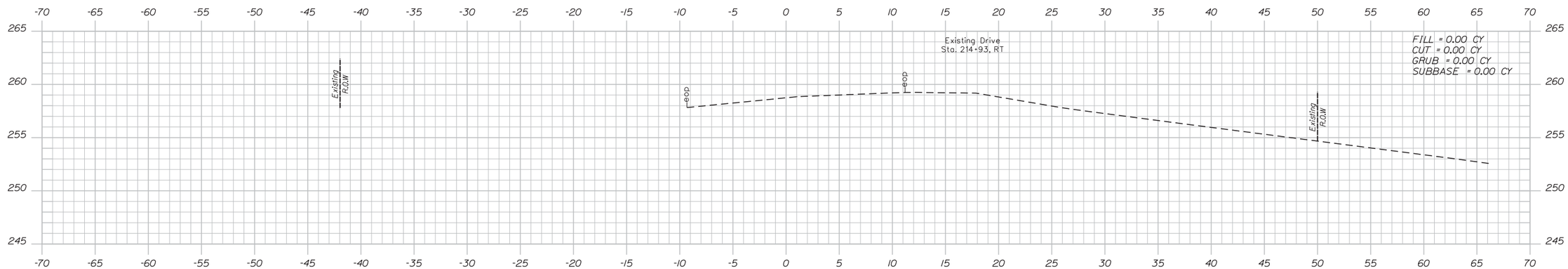

215+00.00

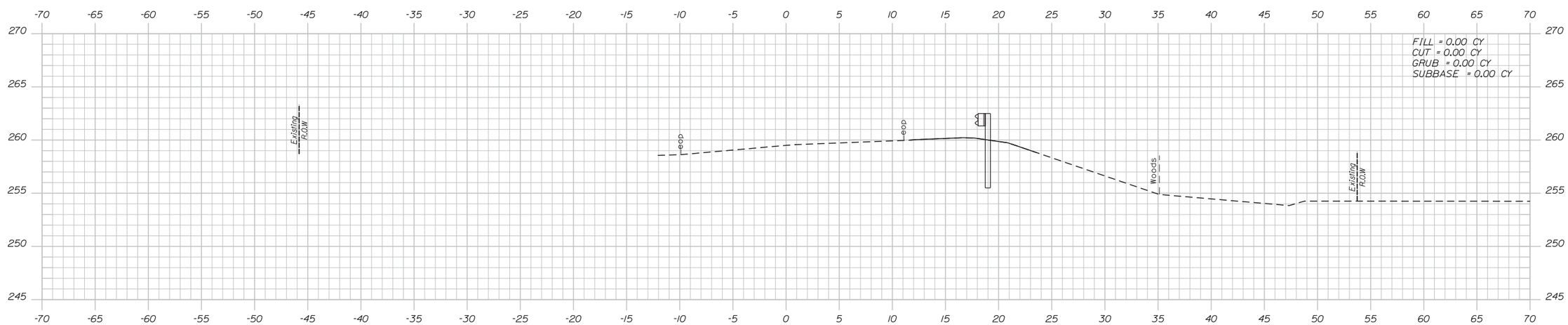

214+75.00

Scale: 5 0 5 10
1" = 5'-0"

No.	Revision	By	Date

Designed by:

vhb

CONSULTANT PROJECT MANAGER: T. Bryant

	By	Date		By	Date
Designed	CLC	12/2015	Checked	ECF	12/2015
Drawn	CLC	12/2015	In Charge of	TSB	12/2015

VANASSE HANGEN BRUSTLIN, INC.
500 Southborough Dr.
Suite 105B
South Portland, ME 04106
TEL (207) 889-3150
FAX (207) 253-5596

MAINE TURNPIKE

THE GOLD STAR MEMORIAL HIGHWAY

MTA PROJECT MANAGER: Ralph Norwood, IV

SUPERSTRUCTURE REPLACEMENT
MAPLE STREET UNDERPASS

CROSS SECTIONS
STA. 214+75 TO STA. 215+00

VHB: 55068.00
CONTRACT: 2016.04

SHEET NUMBER: 19
19 OF 70

Filename: ...\planset\019_Xsect_214+75.dgn

Date:12/31/2015

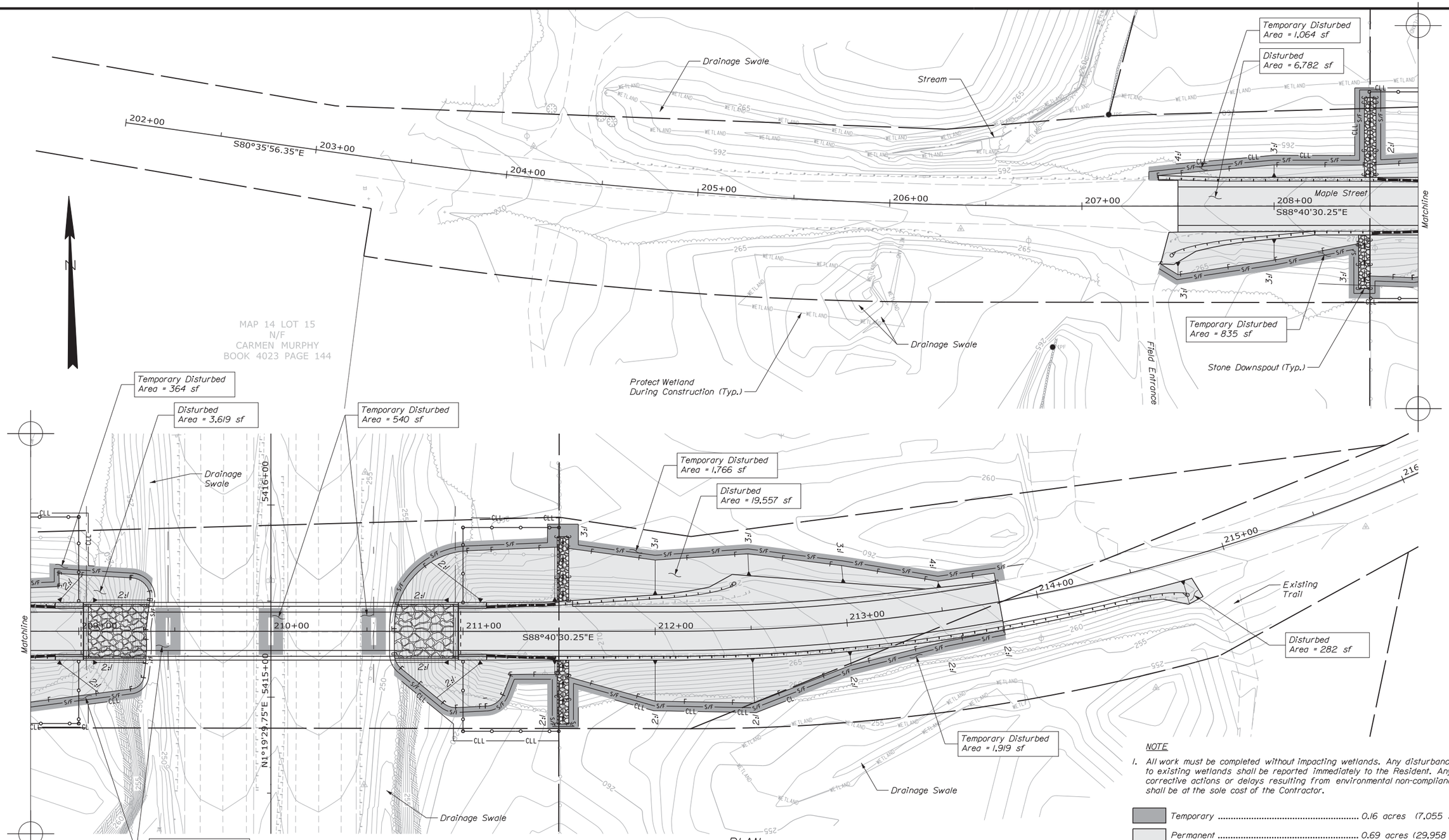

PLAN

25 0 25 50
Scale of Feet

NOTE

1. All work must be completed without impacting wetlands. Any disturbance to existing wetlands shall be reported immediately to the Resident. Any corrective actions or delays resulting from environmental non-compliance shall be at the sole cost of the Contractor.

Temporary	0.16 acres (7,055 sf)
Permanent	0.69 acres (29,958 sf)
Additional Impacts for Contractor Laydown	0.50 acres (21,780 sf)
Total	1.35 acres (58,793 sf)

Scale:

No.	Revision	By	Date

Designed by: vhb

CONSULTANT PROJECT MANAGER: T. Bryant

	By	Date		By	Date
Designed	CLC	12/2015	Checked	SD	12/2015
Drawn	CLC	12/2015	In Charge of	TSB	12/2015

VANASSE HANGEN BRUSTLIN, INC.
500 Southborough Dr.
Suite 105B
South Portland, ME 04106
TEL (207) 889-3150
FAX (207) 253-5596

MAINE TURNPIKE

THE GOLD STAR MEMORIAL HIGHWAY

MTA PROJECT MANAGER: Ralph Norwood, IV

SUPERSTRUCTURE REPLACEMENT
MAPLE STREET UNDERPASS

DISTURBANCE IMPACT PLAN

VHB: 55068.00
CONTRACT: 2016.04

SHEET NUMBER: 20

Filename: ...\020_Disturbance_Plan_01.dgn

DETOUR SIGN SUMMARY

Sign		Text Dimensions (Inches) Letter Height	Text Dimensions (Inches) Vertical Spacing	Size	Quantity and Color
M4-8a	END DETOUR	SHSB		24"x18"	1 - Black on Orange
M4-9 (MOD. L)	DETOUR			30"x24"	10 - Black on Orange
M4-9 (MOD. R)	DETOUR			30"x24"	8 - Black on Orange
M4-9 (MOD. S)	DETOUR			30"x24"	4 - Black on Orange
M4-10L	DETOUR			48"x18"	1 - Black on Orange
M4-10R	DETOUR			48"x18"	1 - Black on Orange
W20-1 (1000)	ROAD CLOSED 1000 FT			36"x36"	2 - Black on Orange
W20-1 (500)	ROAD CLOSED 500 FT			36"x36"	2 - Black on Orange
W20-2	DETOUR 500 FT			36"x36"	3 - Black on Orange
D3-1a	# 1-159 Maple St	3" 6"/4.5"	2" 2" 3"	36"x16"	12 - Black on Orange
D3-1b	# 219-510 Maple St	3" 6"/4.5"	2" 2" 3"	36"x16"	11 - Black on Orange
D3-1c	← # 219-259 # 240-510 → Maple St	3" 3" 6"/4.5"	3.5" 3" 2" 3.5"	36"x24"	1 - Black on Orange
D3-1d	SCHOOLS	4"	2" 2"	30"x8"	8 - White on Green
D3-1e	SCHOOLS ←	4" 4"	2.5" 3" 2.5"	30"x16"	1 - White on Green
D3-1f	SCHOOLS →	4" 4"	2.5" 3" 2.5"	30"x16"	1 - White on Green
D3-1g	# 1-159 Maple St →	3" 6"/4.5" 6"	2" 2" 3" 2"	36"x24"	1 - White on Green
R11-2	ROAD CLOSED	SHSB		48"x30"	2 - Black on White
R11-3b (1)	BRIDGE CLOSED 1/4 MILE AHEAD LOCAL TRAFFIC ONLY	6" 5" 4"	3.38" 3.38"	60"x30"	2 - Black on White
R11-3b (2)	BRIDGE CLOSED 1/2 MILE AHEAD LOCAL TRAFFIC ONLY	6" 5" 4"	3.38" 3.38"	60"x30"	1 - Black on White
R11-3b (3)	BRIDGE CLOSED ON MAPLE ST FOLLOW DETOUR	6" 5" 4"	3.38" 3.38"	60"x30"	5 - Black on White

SHSB - Text Dimensions Shall Conform to "Standard Highway Signs Book" - 2012 Edition.

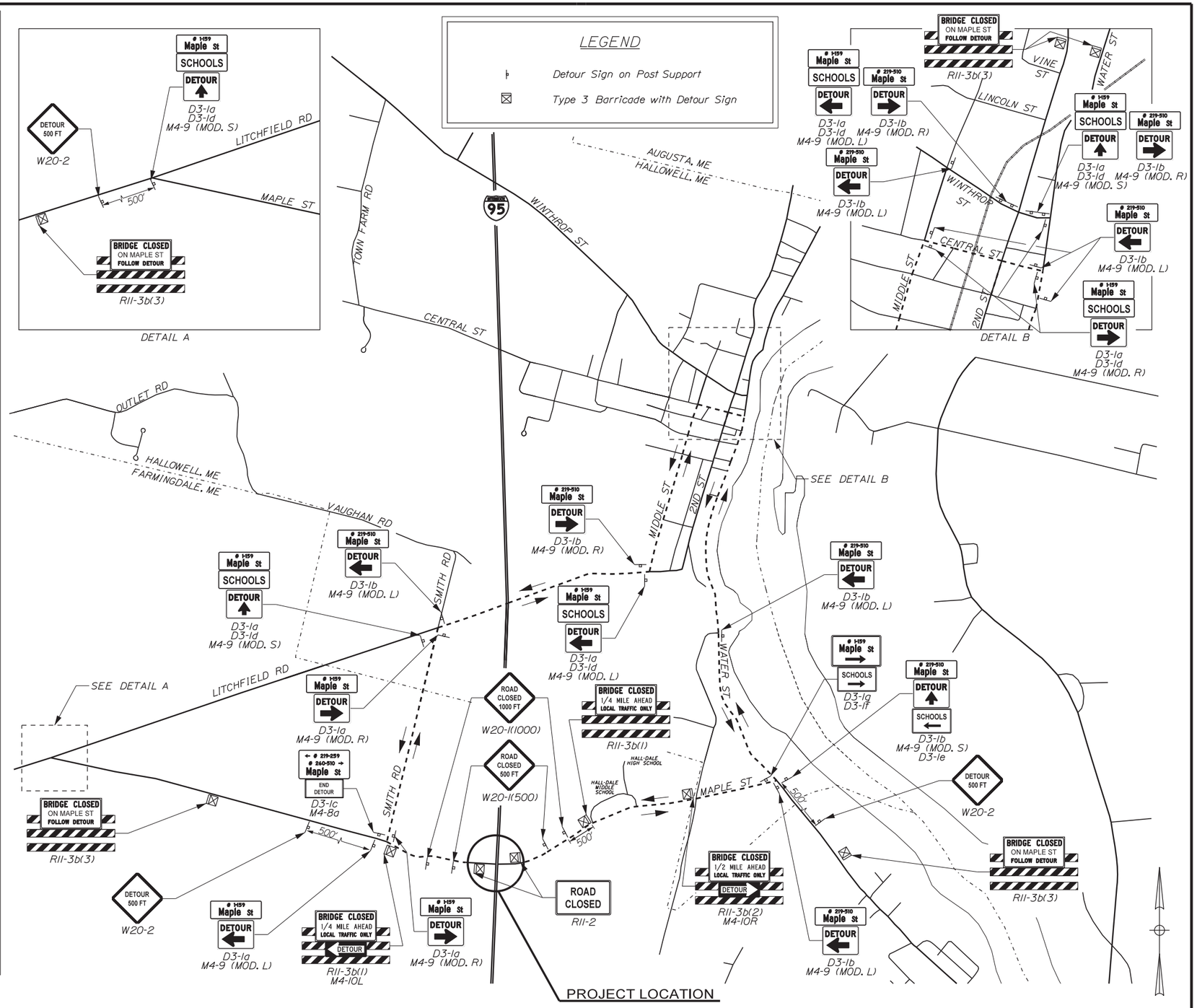

Scale: NOT TO SCALE

No.	Revision	By	Date

Designed by: vhb

CONSULTANT PROJECT MANAGER: T. Bryant

	By	Date		By	Date
Designed	MLG	12/2015	Checked	MDS	12/2015
Drawn	JAR	12/2015	In Charge of	TSB	12/2015

VANASSE HANGEN BRUSTLIN, INC.
500 Southborough Dr.
Suite 105B
South Portland, ME 04106
TEL (207) 889-3150
FAX (207) 253-5596

MAINE TURNPIKE

THE GOLD STAR MEMORIAL HIGHWAY

MTA PROJECT MANAGER: Ralph Norwood, IV

SUPERSTRUCTURE REPLACEMENT MAPLE STREET UNDERPASS

DETOUR PLAN AND SIGN SUMMARY

VHB: 55068.00 SHEET NUMBER: 21

CONTRACT: 2016.04 21 OF 70

Date: 12/31/2015

Filename: ...\cad\st\planset\021_Detour.dgn

TEMPORARY TRAFFIC CONTROL GENERAL NOTES:

1. The traffic control plan for this project is to close the bridge to all traffic for the duration of construction. A temporary detour is proposed along Smith Road, Litchfield Road, Middle Street, Central Street, and Water Street to bypass the bridge. See Detour Plan for details.

2. All traffic control equipment and devices shall conform to the 2014 edition of the Maine Department of Transportation (MaineDOT) Standard Specifications and applicable traffic control standards and practices of the Maine Turnpike Authority (MTA).

3. All traffic control equipment and layouts shall conform to the 2009 edition of the Federal Highway Administration (FHWA) Manual on Uniform Traffic Control Devices (MUTCD), chapter 6. All traffic control signs, sign support structures, channelizing devices, flashing arrow panels (FAP), portable changeable message signs (PCMS), and other traffic control equipment along the roadside shall meet or exceed NCHRP 350 test level 3 (TL-3) requirements regardless of where implemented on the project.

4. All traffic control signs shall be maintained in like-new condition. Placement of signs shall be adjusted to avoid obstructing existing signs and to ensure proper sight lines to the construction signs as determined by the Resident. Where existing sign conflict with construction signs, the contractor shall temporarily remove or cover the conflicting existing sign(s) during construction. The existing sign(s) shall be uncovered or re-installed following construction.

5. Any signs, equipment, or devices found to be damaged or unserviceable shall be replaced at the Contractor's expense. Except for the temporary concrete barrier supplied by the Authority.

6. During night operations, temporary work lighting shall be directed away from approaching lanes of traffic.

7. Temporary lane closures will be required, with advanced approval, whenever work will occur within four feet of the Turnpike traveled way. Temporary lane closures shall be removed if no work is occurring.

8. All lane closures shall require approval of the Resident a minimum of two working days in advance of the lane closure.

9. Contractor shall provide advanced notice of all road closures with PCMS at least seven working days prior to the proposed closure. PCMS for the bridge closure shall be placed within 500 feet of the bridge along Maple Street. PCMS for turnpike mainline road closures shall be placed at least 500 feet in advance of the Maple Street underpass at a location approved by the Resident.

10. Approach ends of temporary concrete barrier shall be placed outside of the highway clear zone (minimum 34 feet from the traveled way along I-95) or protected by temporary impact attenuators or with guardrail overlaps as approved by the Resident.

11. At the completion of the work, the temporary detour shall be removed.

TURNPIKE RIGHT SHOULDER CLOSURES

CONSTRUCTION SIGN SUMMARY

Sign		Text Dimensions (Inches) Letter Height	Text Dimensions (Inches) Vertical Spacing	Size	Quantity and Color
G20-2	END ROAD WORK	Text Dimensions Shall Conform to "Standard Highway Signs" - 2012		48"x24"	4 - Black on Orange
W20-1 (AHEAD)	ROAD WORK AHEAD			48"x48"	4 - Black on Orange
W21-5aR	RIGHT SHOULDER CLOSED 1000 FT			48"x48"	4 - Black on Orange
W21-5bR	RIGHT SHOULDER CLOSED			48"x48"	4 - Black on Orange

TURNPIKE MEDIAN WORK AREA

CONSTRUCTION SIGN SUMMARY

Sign		Text Dimensions (Inches) Letter Height	Text Dimensions (Inches) Vertical Spacing	Size	Quantity and Color
G20-2	END ROAD WORK	Text Dimensions Shall Conform to "Standard Highway Signs" - 2012		48"x24"	4 - Black on Orange
W20-1 (AHEAD)	ROAD WORK AHEAD			48"x48"	4 - Black on Orange
W21-5aL	LEFT SHOULDER CLOSED 1000 FT			48"x48"	4 - Black on Orange
W21-5bL	LEFT SHOULDER CLOSED			48"x48"	4 - Black on Orange

TEMPORARY LANE & ROADWAY CLOSURES

CONSTRUCTION SIGN SUMMARY

Sign		Text Dimensions (Inches) Letter Height	Text Dimensions (Inches) Vertical Spacing	Size	Quantity and Color
CS-3	EXPECT STOPPED TRAFFIC	7" 7" 7"	4" 4"	48"x48"	4 - Black on Orange
G20-2	END ROAD WORK	Text Dimensions Shall Conform to "Standard Highway Signs" - 2012		48"x24"	4 - Black on Orange
G20-5aP	WORK ZONE			36"x24"	4 - Black on Orange
R2-1(50)	SPEED LIMIT 50			48"x60"	4 - Black on White
R2-6aP	FINES DOUBLE			36"x24"	4 - Black on White
R2-12	END WORK ZONE SPEED LIMIT			36"x54"	4 - Black on White
W3-4	BE PREPARED TO STOP			48"x48"	4 - Black on Orange
W3-5(50)	EXPECT LIMIT 50			48"x48"	4 - Black on Orange
W4-2(L)				48"x48"	4 - Black on Orange
W4-2(R)				48"x48"	4 - Black on Orange
W20-1 (1 MILE)	ROAD WORK 1 MILE			48"x48"	4 - Black on Orange
W20-5L	LEFT LANE CLOSED X MILE			48"x48"	4 - Black on Orange
W20-5R	RIGHT LANE CLOSED X MILE			48"x48"	4 - Black on Orange

ABBREVIATIONS FOR ALL WORK ZONE PLANS

BWLL = BROKEN WHITE LANE LINE
SWEL = SOLID WHITE EDGE LINE
SYEL = SOLID YELLOW EDGE LINE

Date:12/31/2015

Filename: ...\st\planset\022_Workzone_01.dgn

Scale: NOT TO SCALE

No.	Revision	By	Date

Designed by: vhb

CONSULTANT PROJECT MANAGER: T. Bryant

	By	Date		By	Date
Designed	MLG	12/2015	Checked	MDS	12/2015
Drawn	JAR	12/2015	In Charge of	TSB	12/2015

VANASSE HANGEN BRUSTLIN, INC.
500 Southborough Dr.
Suite 105B
South Portland, ME 04106
TEL (207) 889-3150
FAX (207) 253-5596

MAINE TURNPIKE

THE GOLD STAR MEMORIAL HIGHWAY

MTA PROJECT MANAGER: Ralph Norwood, IV

SUPERSTRUCTURE REPLACEMENT
MAPLE STREET UNDERPASS
WORK ZONE PLANS
(1 OF 3)

VHB: 55068.00
CONTRACT: 2016.04

SHEET NUMBER: 22
22 OF 70

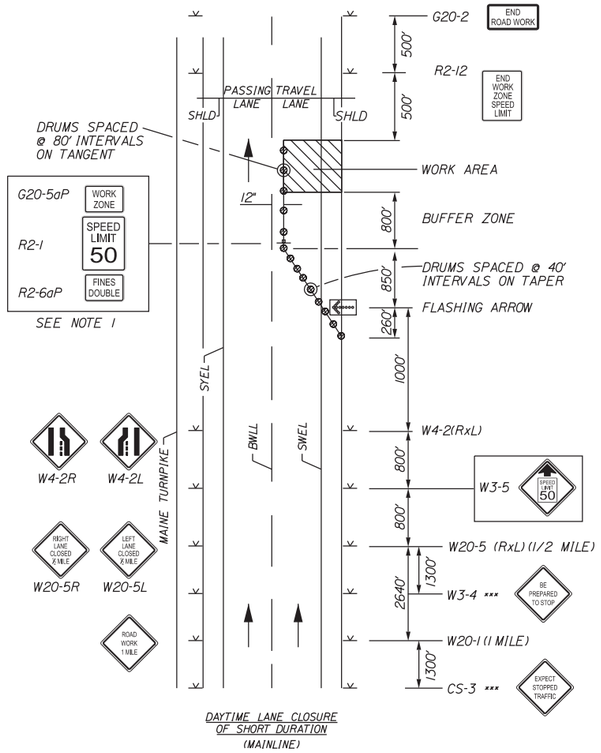

DAYTIME LANE CLOSURE OF SHORT DURATION (MAINLINE)

SINGLE LANE CLOSURE SIGNS ON EASELS

1. For easel set up only, this sign is not bracketed. One sign assembly is placed at the end of the taper. signs may be split onto two easels.

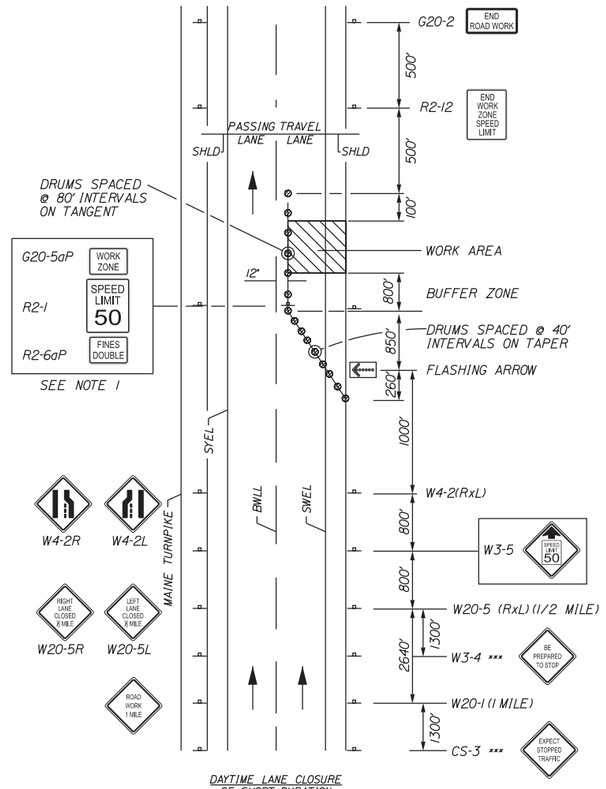

DAYTIME LANE CLOSURE OF SHORT DURATION (MAINLINE)

SINGLE LANE CLOSURE POST MOUNTED SIGN SETUP

1. Post mounted signs shall be covered when lane closure is removed.

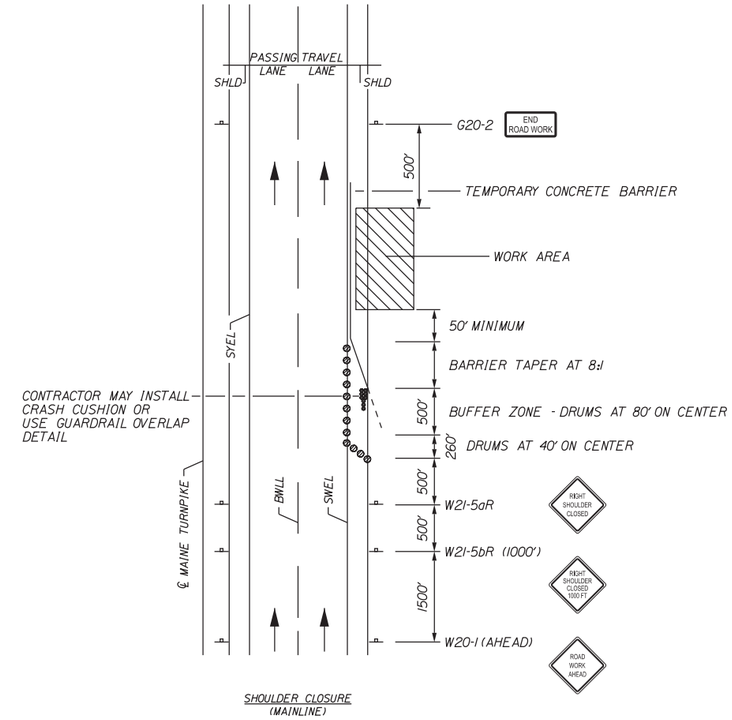

SHOULDER CLOSURE (MAINLINE)

SHOULDER CLOSURE

1. The W20-1 and G20-2 signs are not required if the shoulder closure is within a previously established work zone.

GENERAL NOTES:

1. For sign details, see construction sign summary.
2. Signs designated with *** shall be used during stoppages of traffic.
3. When truck mounted attenuators are included in the contract (incidental or pay item), they shall not be located in the buffer zone.

LEGEND

- Construction Sign on Post Support
- Construction Sign on Easel
- Drums/Channelizing Devices
- Temporary Concrete Barrier, Type 1
- Temporary Impact Attenuator
- Work Area
- Type 3 Barricade with Sign
- Type 3 Barricade

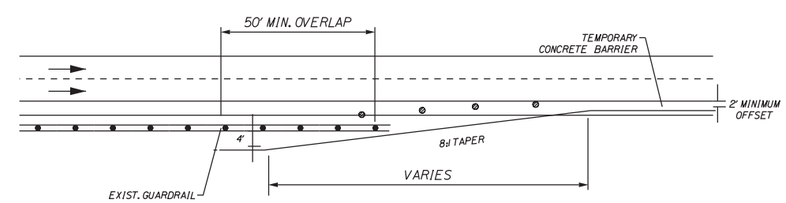

CONCRETE BARRIER / GUARDRAIL OVERLAP DETAIL

NOTES:

1. Barrier ends within the highway clear zone shall be protected by a temporary impact attenuator or Lapped behind guardrail.
2. If a temporary work zone crash cushion is used, the work zone crash cushion system must be founded On a level surface. Any work necessary to provide a level surface will be incidental to the work Zone crash cushion item.

Date: 12/31/2015

Filename: ...\st\planset\023_Workzone_02.dgn

Scale: NOT TO SCALE

No.	Revision	By	Date

Designed by: vhb

CONSULTANT PROJECT MANAGER: T. Bryant

	By	Date		By	Date
Designed	MLG	12/2015	Checked	MDS	12/2015
Drawn	JAR	12/2015	In Charge of	TSB	12/2015

VANASSE HANGEN BRUSTLIN, INC.
500 Southborough Dr.
Suite 105B
South Portland, ME 04106
TEL (207) 889-3150
FAX (207) 253-5596

MAINE TURNPIKE

THE GOLD STAR MEMORIAL HIGHWAY

MTA PROJECT MANAGER: Ralph Norwood, IV

SUPERSTRUCTURE REPLACEMENT
MAPLE STREET UNDERPASS

WORK ZONE PLANS
(2 OF 3)

VHB: 55068.00
CONTRACT: 2016.04

SHEET NUMBER: 23

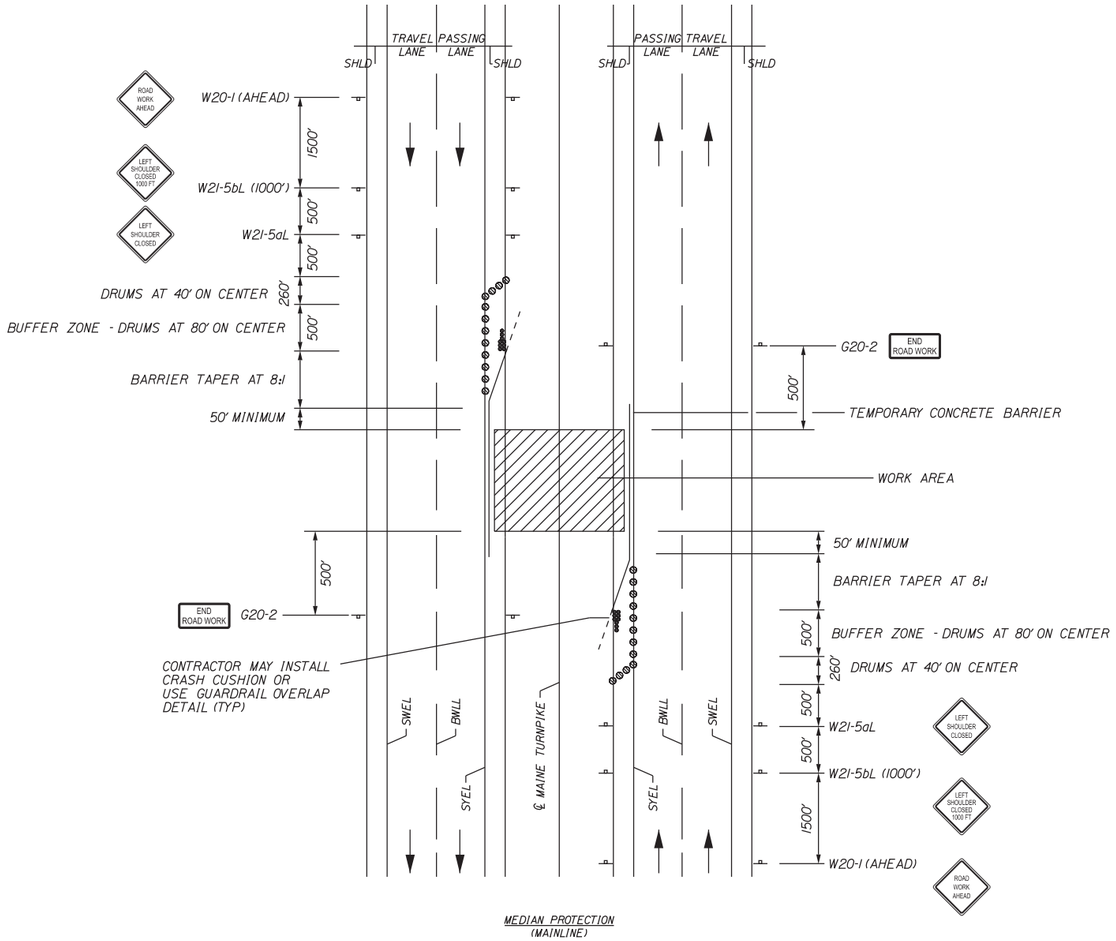

MEDIAN PROTECTION
(MAINLINE)

MEDIAN WORK AREA

1. The W20-1 and G20-2 signs are not required if the work is within a previously established work zone.

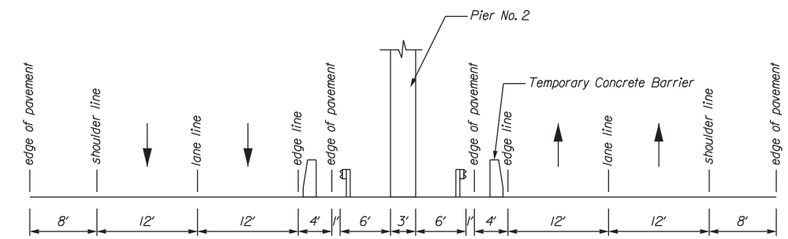

MEDIAN WORK TYPICAL

(Not to Scale)

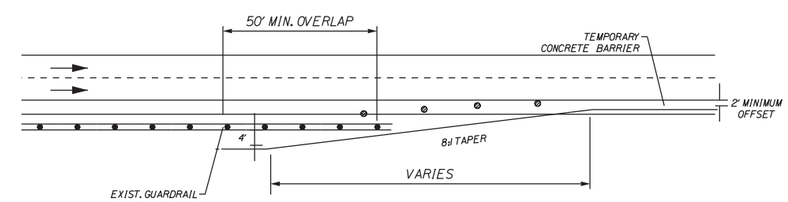

CONCRETE BARRIER / GUARDRAIL OVERLAP DETAIL

LEGEND

- Construction Sign on Post Support
- Construction Sign on Easel
- Drums/Channelizing Devices
- Temporary Concrete Barrier, Type 1
- Temporary Impact Attenuator
- Work Area
- Type 3 Barricade with Sign
- Type 3 Barricade

GENERAL NOTES:

1. For sign details, see construction sign summary.
2. When truck mounted attenuators are included in the contract (incidental or pay item), they shall not be located in the buffer zone.

NOTES:

1. Barrier ends within the highway clear zone shall be protected by a temporary impact attenuator or Lapped behind guardrail.
2. If a temporary work zone crash cushion is used, the work zone crash cushion system must be founded On a level surface. Any work necessary to provide a level surface will be incidental to the Work Zone Crash Cushion item.

Date:12/31/2015

Filename: ...\st\planset\024_Workzone_03.dgn

Scale: NOT TO SCALE

No.	Revision	By	Date

Designed by: vhb

CONSULTANT PROJECT MANAGER: T. Bryant

	By	Date		By	Date
Designed	MLG	12/2015	Checked	MDS	12/2015
Drawn	JAR	12/2015	In Charge of	TSB	12/2015

VANASSE HANGEN BRUSTLIN, INC.
500 Southborough Dr.
Suite 105B
South Portland, ME 04106
TEL (207) 889-3150
FAX (207) 253-5596

MAINE TURNPIKE

THE GOLD STAR MEMORIAL HIGHWAY

MTA PROJECT MANAGER: Ralph Norwood, IV

SUPERSTRUCTURE REPLACEMENT
MAPLE STREET UNDERPASS

WORK ZONE PLANS
(3 OF 3)

VHB: 55068.00
CONTRACT: 2016.04

SHEET NUMBER: 24
24 OF 70

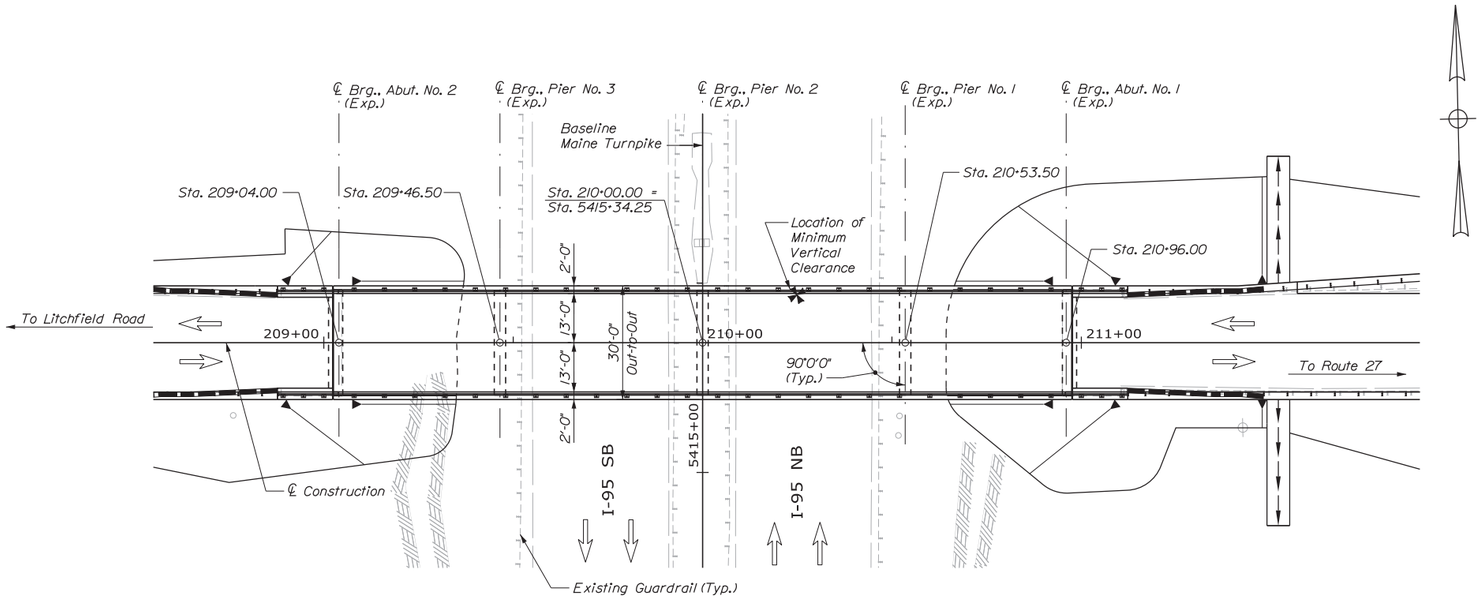

PLAN

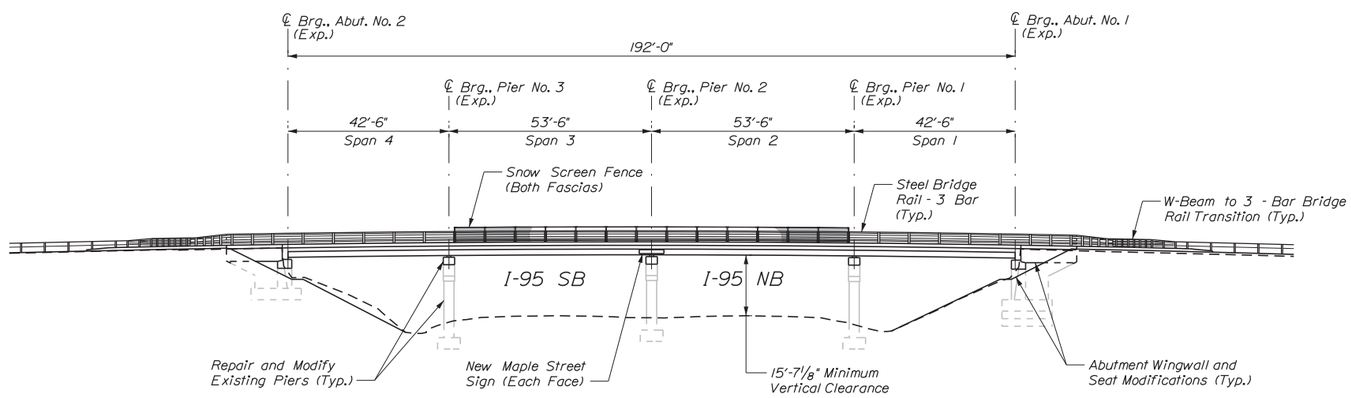

ELEVATION
(Existing Guardrail not Shown)

SPECIFICATIONS

Design: AASHTO LRFD Bridge Design Specifications, 2014 and Interims Through 2015

Construction: State of Maine Department of Transportation Standard Specifications, Revision of November 2014.

State of Maine Department of Transportation Standard Details for Highways and Bridges, 2014, with all revisions thereto.

AASHTO LRFD Bridge Construction Specifications, Third Edition with 2015 Interims

DESIGN LOADING

Live Load ..... HL - 93

MATERIALS

Concrete (Unless noted otherwise) ..... Class AAA
Concrete (Deck) ..... Class "AAA" - Deck
Reinforcing Steel ..... ASTM A615/A615M, Grade 60 (Epoxy Coated, Unless Otherwise Noted)

Structural Steel:
All Material (except as noted) ..... ASTM A709/A709M, Grade 50W
High Strength Bolts (except as noted) ..... ASTM A325, Type 3

BASIC DESIGN STRESSES

Concrete ..... f 'c = 4,500 psi
Reinforcing Steel ..... f y = 60,000 psi
Structural Steel:
ASTM A 709/A 709M, Grade 50W ..... F y = 50,000 psi
ASTM A 709/A 709M, Grade 36 ..... F y = 36,000 psi
ASTM A 325 ..... F = 120,000 psi

TRAFFIC DATA - MAPLE STREET

AADT 750
Heavy Trucks (% AADT) ..... N/A
Design Speed (MPH) 35
Functional Class ..... Rural Minor Collector

Scale: 20 0 20 40
1" = 20'-0"

No.	Revision	By	Date

Designed by: vhb

CONSULTANT PROJECT MANAGER: T. Bryant

	By	Date		By	Date
Designed	MED	12/2015	Checked	GME	12/2015
Drawn	CLC	12/2015	In Charge of	TSB	12/2015

VANASSE HANGEN BRUSTLIN, INC.
500 Southborough Dr.
Suite 105B
South Portland, ME 04106
TEL (207) 889-3150
FAX (207) 253-5596

MAINE TURNPIKE

THE GOLD STAR MEMORIAL HIGHWAY

MTA PROJECT MANAGER: Ralph Norwood, IV

SUPERSTRUCTURE REPLACEMENT
MAPLE STREET UNDERPASS

BRIDGE PLAN AND ELEVATION

VHB: 55068.00
CONTRACT: 2016.04

SHEET NUMBER: 25
25 OF 70

Date: 12/31/2015
Filename: ...\st\planset\025_plan&elev.dgn

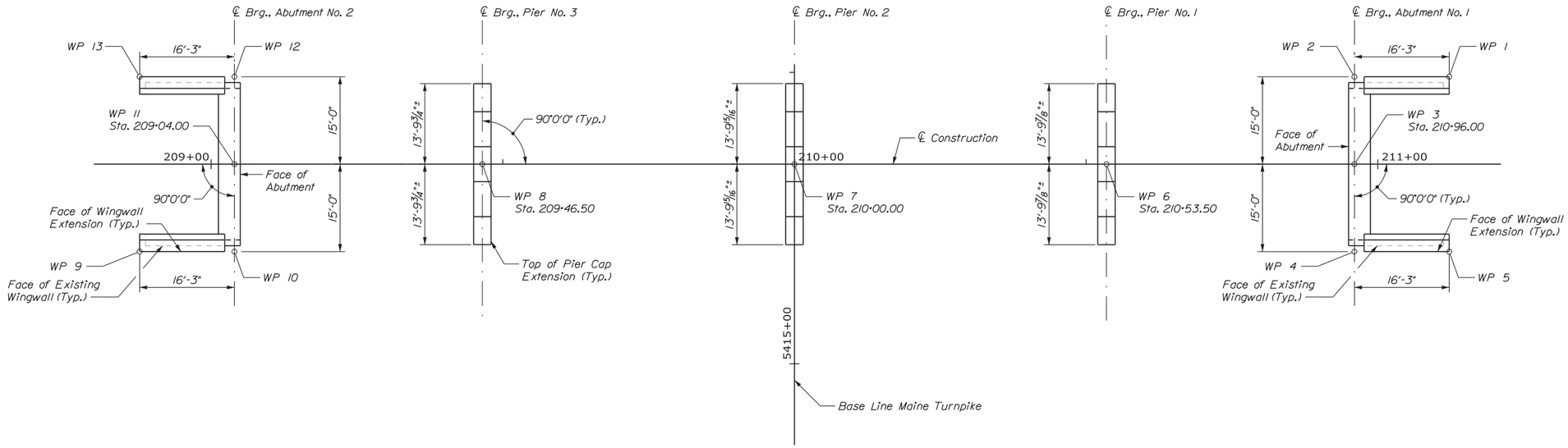

SURVEY LAYOUT

WP No.	Northing	Easting
1	521944.6129	1133219.1213
2	521944.9886	1133202.8756
3	521929.9926	1133202.5288
4	521914.9966	1133202.1819
5	521914.6209	1133218.4276
6	521930.9753	1133160.0401
7	521932.2124	1133106.5544
8	521933.4494	1133053.0687
9	521919.8118	1132993.9876
10	521919.4361	1133010.2333
11	521934.4321	1133010.5801
12	521949.4281	1133010.9269
13	521949.8038	1132994.6813

BRIDGE LAYOUT NOTES

1. The centerline construction location and alignment of Maple Street is based on existing plans and survey points obtained at abutment seats and wingwalls.

Date:12/31/2015

Filename: ...\st\planset\026_Survey_01.dgn

Scale: 2 0 14 30
3/32" = 1'-0"

No.	Revision	By	Date

Designed by: vhb

CONSULTANT PROJECT MANAGER: T. Bryant

	By	Date		By	Date
Designed	MED	12/2015	Checked	GME	12/2015
Drawn	CLC	12/2015	In Charge of	TSB	12/2015

VANASSE HANGEN BRUSTLIN, INC.
500 Southborough Dr.
Suite 105B
South Portland, ME 04106
TEL (207) 889-3150
FAX (207) 253-5596

MAINE TURNPIKE

THE GOLD STAR MEMORIAL HIGHWAY

MTA PROJECT MANAGER: Ralph Norwood, IV

SUPERSTRUCTURE REPLACEMENT
MAPLE STREET UNDERPASS

BRIDGE SURVEY LAYOUT PLAN

VHB: 55068.00
CONTRACT: 2016.04

SHEET NUMBER: 26
26 OF 70

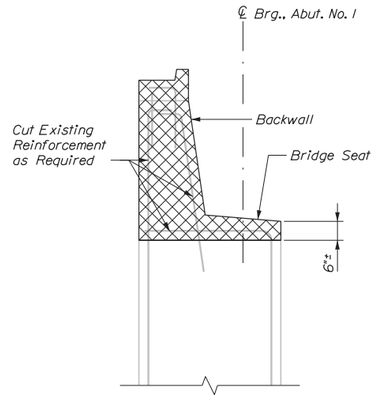

SECTION A-A
Scale: 1/2" = 1'-0"

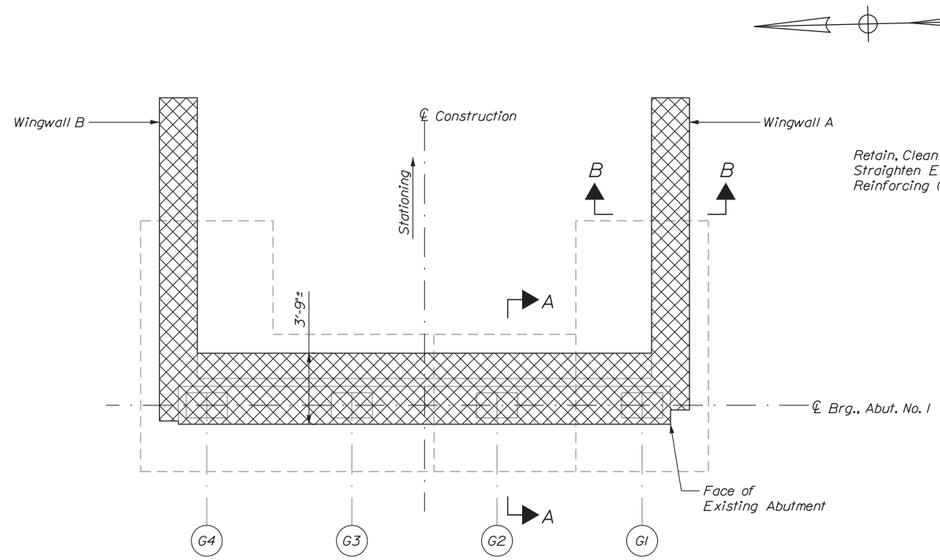

PLAN
Scale: 1/4" = 1'-0"

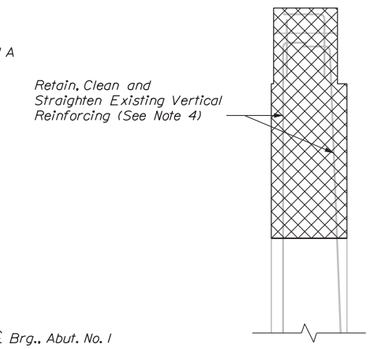

SECTION B-B
Scale: 1/2" = 1'-0"

ABUTMENT REMOVAL NOTES

1. Contractor shall remove tactyl (bituminous) coating from remaining exposed abutment surfaces where present to finished grade or existing ground (whichever is lower). Cost included in Item 202.17.
2. Concrete demolition, which generally includes portions of wingwalls, portions of bridge seat, and abutment backwalls, will be measured for payment under pay Item 202.17. Removing Existing Structural Concrete. This work shall include sawcutting and removing existing concrete and reinforcing steel to the limits shown in the plans.
3. Excavation required to complete partial abutment removal and construction will not be measured for payment and considered incidental to Item 202.17. Backfill of the repair areas shall be measured for payment under pay Item 203.25, Granular Borrow as shown in the plans.
4. Existing reinforcement shall be retained, cleaned, and straightened where noted unless otherwise approved by the Resident.

DEMOLITION QUANTITY (CY)

Removing Existing Structural Concrete 19.4

KEY

= Concrete Removal (Item 202.17)

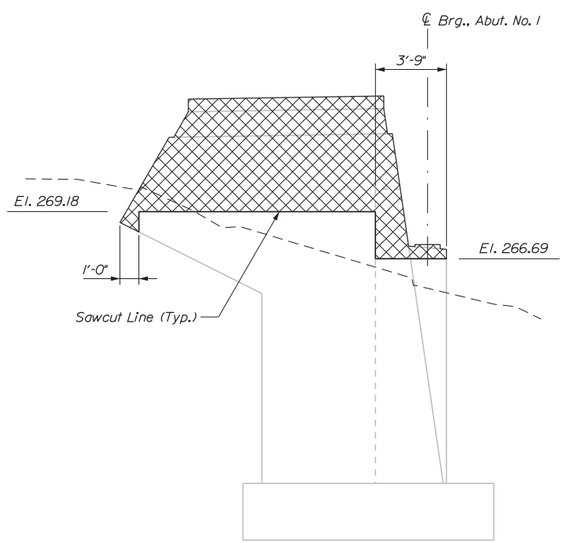

ELEVATION
WINGWALL B
Scale: 1/4" = 1'-0"

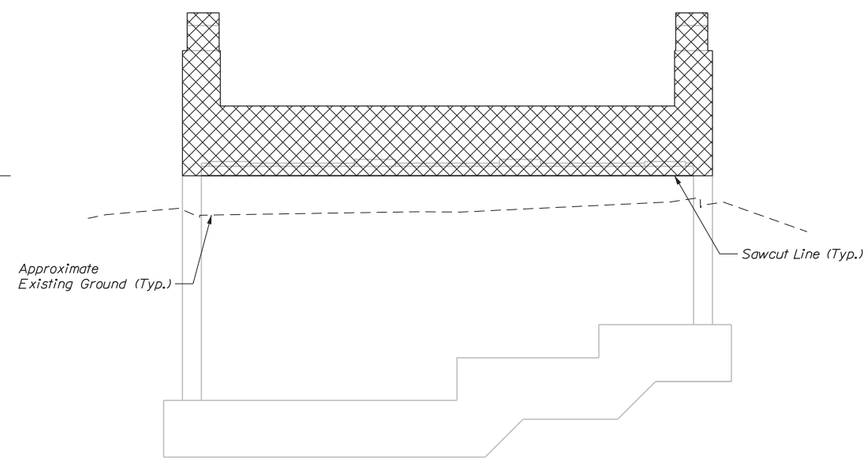

ELEVATION
Scale: 1/4" = 1'-0"

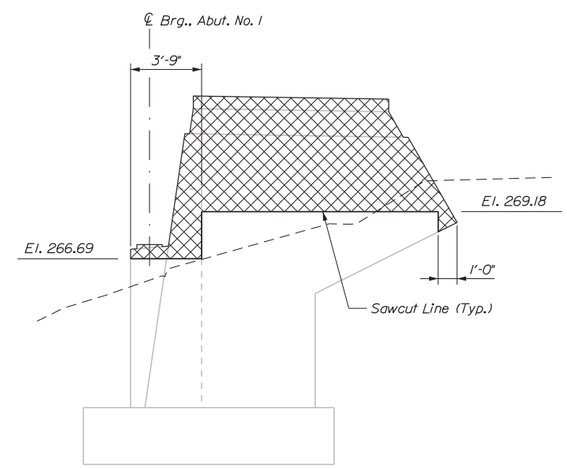

ELEVATION
WINGWALL A
Scale: 1/4" = 1'-0"

1 0 5
1/2" = 1'-0"
4 0 8
1/4" = 1'-0"

Date:12/31/2015

Filename: ...\st\planset\027_Abut1_01.dgn

Scale: AS NOTED

No.	Revision	By	Date

Designed by:

vhb

CONSULTANT PROJECT MANAGER: T. Bryant

	By	Date		By	Date
Designed	MED	12/2015	Checked	GME	12/2015
Drawn	CLC	12/2015	In Charge of	TSB	12/2015

VANASSE HANGEN BRUSTLIN, INC.
500 Southborough Dr.
Suite 105B
South Portland, ME 04106
TEL (207) 889-3150
FAX (207) 253-5596

MAINE TURNPIKE

THE GOLD STAR MEMORIAL HIGHWAY

MTA PROJECT MANAGER: Ralph Norwood, IV

SUPERSTRUCTURE REPLACEMENT
MAPLE STREET UNDERPASS

ABUTMENT NO. 1
REMOVAL

VHB: 55068.00
CONTRACT: 2016.04

SHEET NUMBER: 27

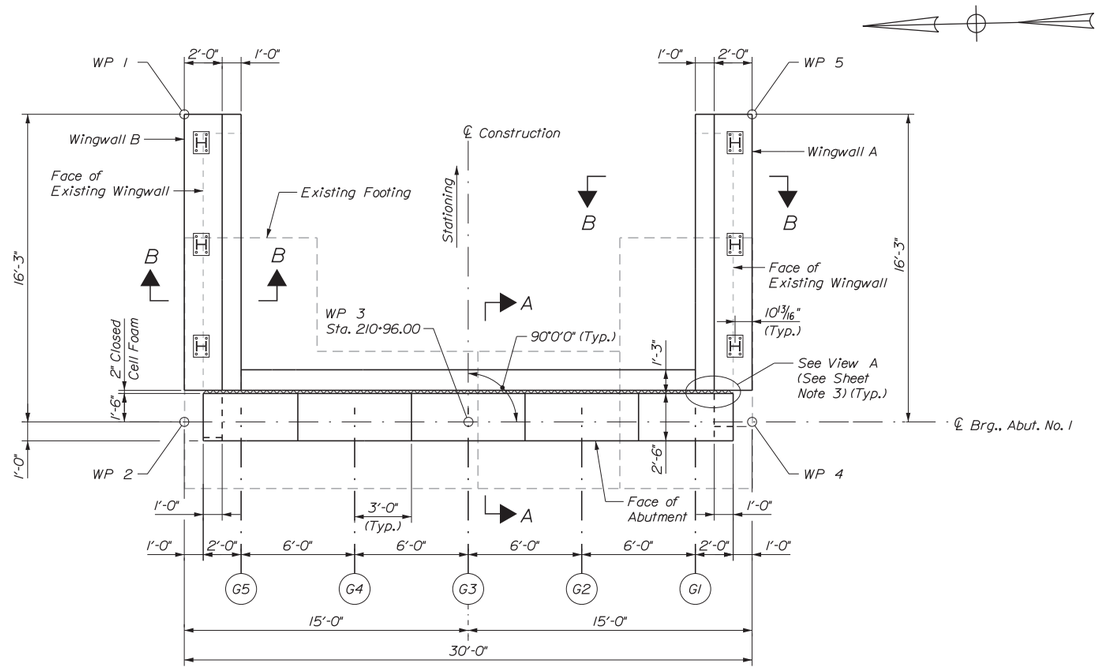

PLAN
Scale: 1/4" = 1'-0"

ABUTMENT CONSTRUCTION NOTES

1. Remove abutment seat concrete and reinforcing steel within the limits shown, including bearing anchor bolts. Retain and protect existing reinforcing steel where noted.
2. Install new reinforcing steel, drill and grout bars into existing concrete as required.
3. Install form work and fill forms with class AAA concrete.
4. Perform general finishing.

SHEET NOTES

1. See Abutment No. 1 Removal Sheet for Abutment Removal Notes.
2. See Abutment Wingwalls Reinforcement Sheet for Wingwall Reinforcement.
3. See Abutment No. 2 Repair and Modifications Sheet for View A.
4. See Miscellaneous Abutment Details Sheet for Sections A-A and B-B.
5. See Concrete Surface Repair Detail and Notes on Pier No. 2 Repair and Modifications Sheet.

ESTIMATED REPAIR QUANTITIES (SF)

Abutment Surface Patch Repairs 6*
* Includes 5 S.F. additional repair quantity as a contingency

KEY

= Concrete Patch Repair (Item 518.10)

(#) = Square Foot Area of Repair

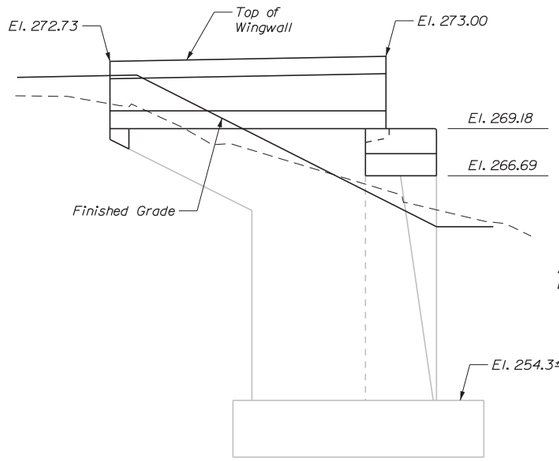

ELEVATION
WINGWALL B
Scale: 1/4" = 1'-0"

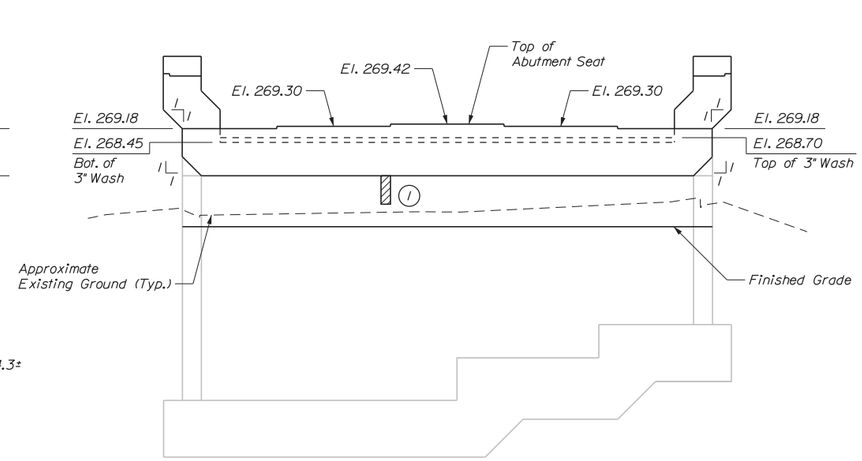

ELEVATION
Scale: 1/4" = 1'-0"

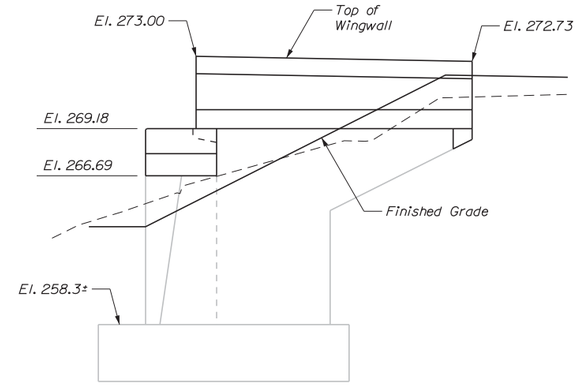

ELEVATION
WINGWALL A
Scale: 1/4" = 1'-0"

Date:12/31/2015

Filename: ...\st\planset\028_Abut1_02.dgn

Scale: 4 0 8
1/4" = 1'-0"

No.	Revision	By	Date

Designed by: vhb

CONSULTANT PROJECT MANAGER: T. Bryant

	By	Date		By	Date
Designed	MED	12/2015	Checked	GME	12/2015
Drawn	CLC	12/2015	In Charge of	TSB	12/2015

VANASSE HANGEN BRUSTLIN, INC.
500 Southborough Dr.
Suite 105B
South Portland, ME 04106
TEL (207) 889-3150
FAX (207) 253-5596

MAINE TURNPIKE

THE GOLD STAR MEMORIAL HIGHWAY

MTA PROJECT MANAGER: Ralph Norwood, IV

SUPERSTRUCTURE REPLACEMENT
MAPLE STREET UNDERPASS

ABUTMENT NO. 1
REPAIR AND MODIFICATIONS

VHB: 55068.00 SHEET NUMBER: 28
CONTRACT: 2016.04

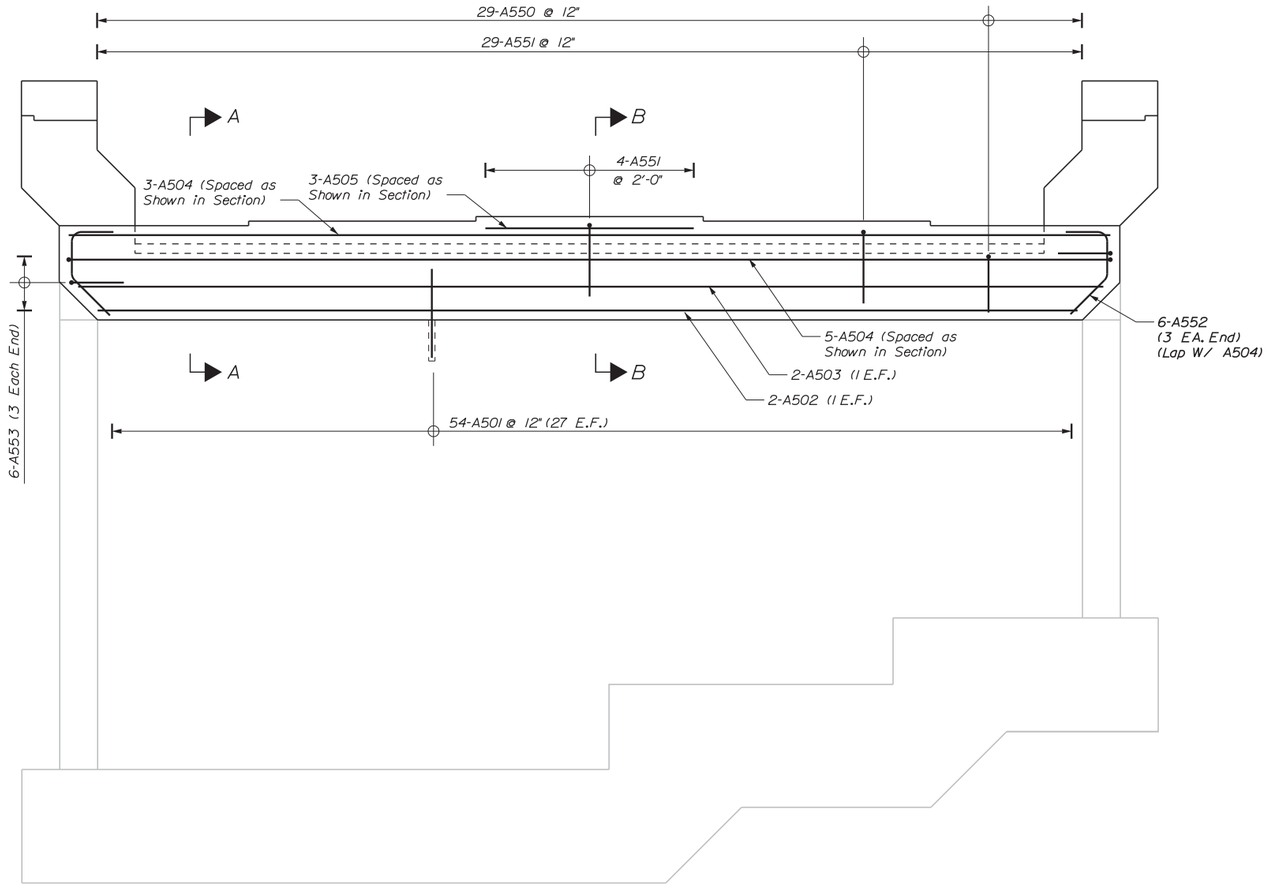

ELEVATION
Scale: 1/2" = 1'-0"

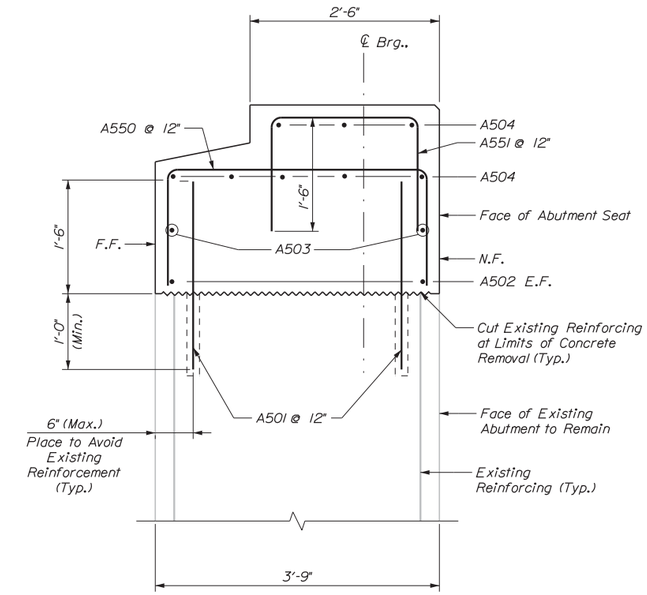

SECTION A-A
Scale: 1" = 1'-0"

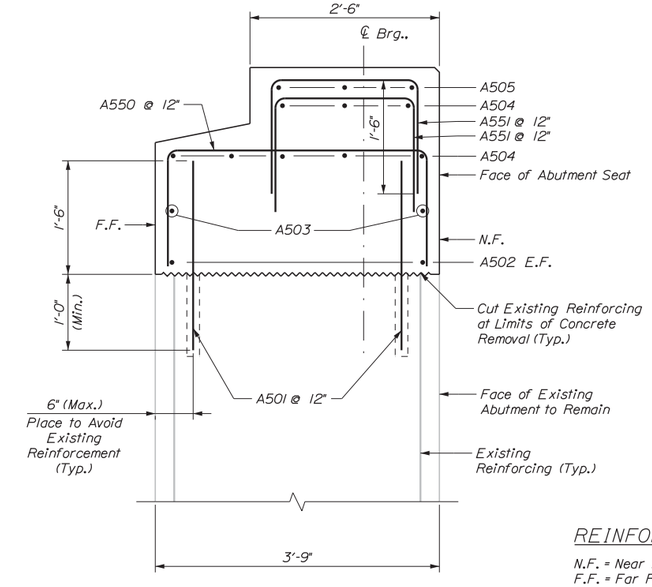

SECTION B-B
Scale: 1" = 1'-0"

REINFORCING KEY

N.F. = Near Face
F.F. = Far Face
E.F. = Each Face
▲ = Cut in Field

1 0 2
1" = 1'-0"
1 5
1/2" = 1'-0"

Date:12/31/2015

Filename: ...\st\planset\029_Abut1_03.dgn

Scale:AS NOTED

No.	Revision	By	Date

Designed by:

vhb

CONSULTANT PROJECT MANAGER: T. Bryant

	By	Date		By	Date
Designed	MED	12/2015	Checked	GME	12/2015
Drawn	CLC	12/2015	In Charge of	TSB	12/2015

VANASSE HANGEN BRUSTLIN, INC.
500 Southborough Dr.
Suite 105B
South Portland, ME 04106
TEL (207) 889-3150
FAX (207) 253-5596

MAINE TURNPIKE

THE GOLD STAR MEMORIAL HIGHWAY

MTA PROJECT MANAGER: Ralph Norwood, IV

SUPERSTRUCTURE REPLACEMENT
MAPLE STREET UNDERPASS

ABUTMENT NO. 1
REINFORCEMENT

VHB: 55068.00
CONTRACT: 2016.04

SHEET NUMBER: 29
29 OF 70

SHEET NOTES

1. See Abutment No. 1 Removal Sheet for Abutment Removal Notes.

DEMOLITION QUANTITY (CY)

Removing Existing Structural Concrete 19.4

KEY

= Concrete Removal (Item 202.17)

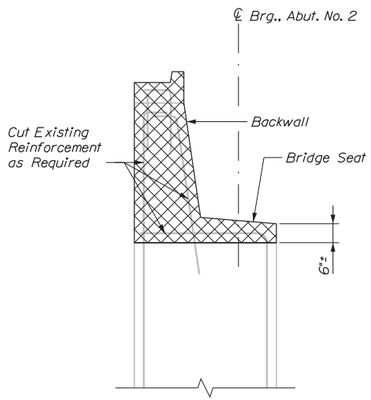

SECTION A-A
Scale: 1/2" = 1'-0"

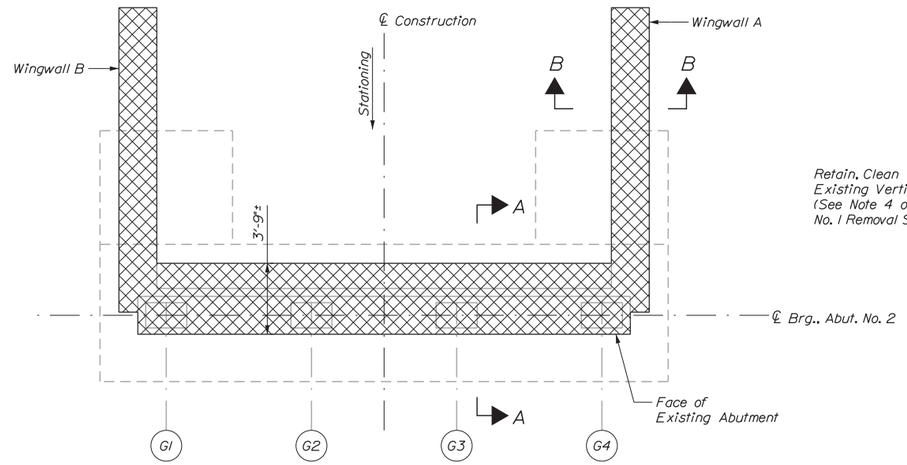

PLAN
Scale: 1/4" = 1'-0"

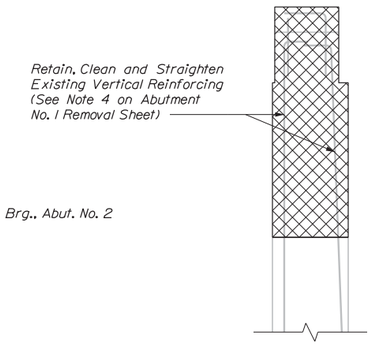

SECTION B-B
Scale: 1/2" = 1'-0"

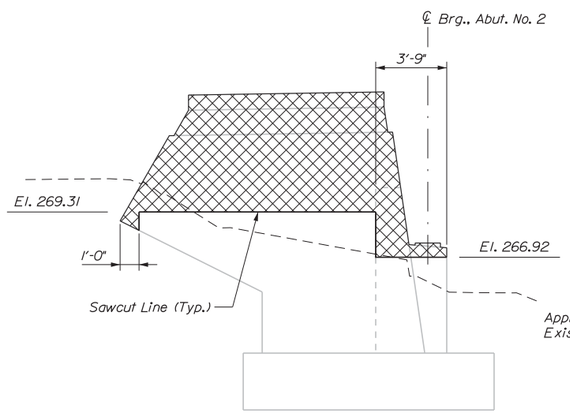

ELEVATION
WINGWALL B
Scale: 1/4" = 1'-0"

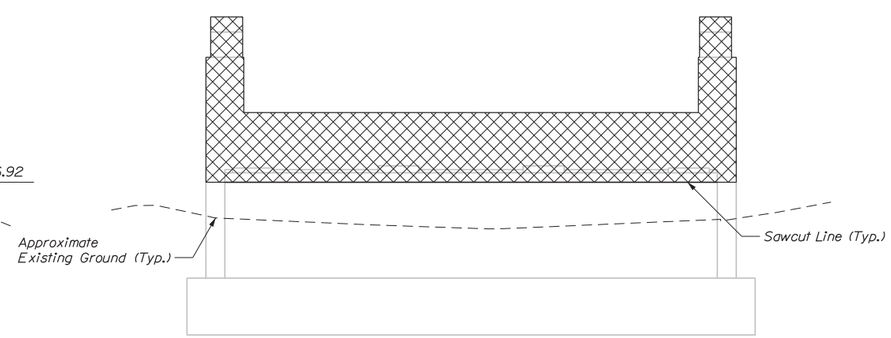

ELEVATION
Scale: 1/4" = 1'-0"

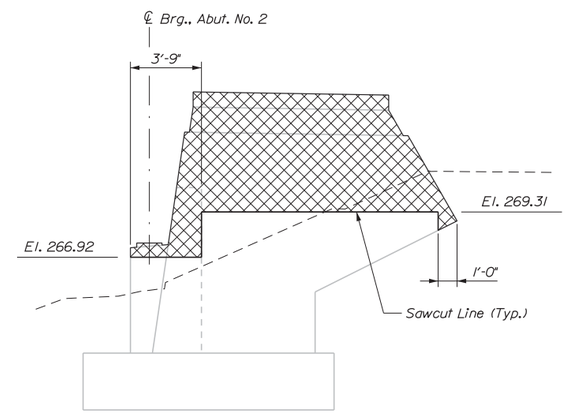

ELEVATION
WINGWALL A
Scale: 1/4" = 1'-0"

1 0 5
1/2" = 1'-0"
4 0 8
1/4" = 1'-0"

Date:12/31/2015

Filename: ...\st\planset\030_Abut2_01.dgn

Scale: AS NOTED

No.	Revision	By	Date

Designed by:

vhb

CONSULTANT PROJECT MANAGER: T. Bryant

	By	Date		By	Date
Designed	MED	12/2015	Checked	GME	12/2015
Drawn	CLC	12/2015	In Charge of	TSB	12/2015

VANASSE HANGEN BRUSTLIN, INC.
500 Southborough Dr.
Suite 105B
South Portland, ME 04106
TEL (207) 889-3150
FAX (207) 253-5596

MAINE TURNPIKE

THE GOLD STAR MEMORIAL HIGHWAY

MTA PROJECT MANAGER: Ralph Norwood, IV

SUPERSTRUCTURE REPLACEMENT
MAPLE STREET UNDERPASS

ABUTMENT NO. 2
REMOVAL

VHB: 55068.00
CONTRACT: 2016.04

SHEET NUMBER: 30

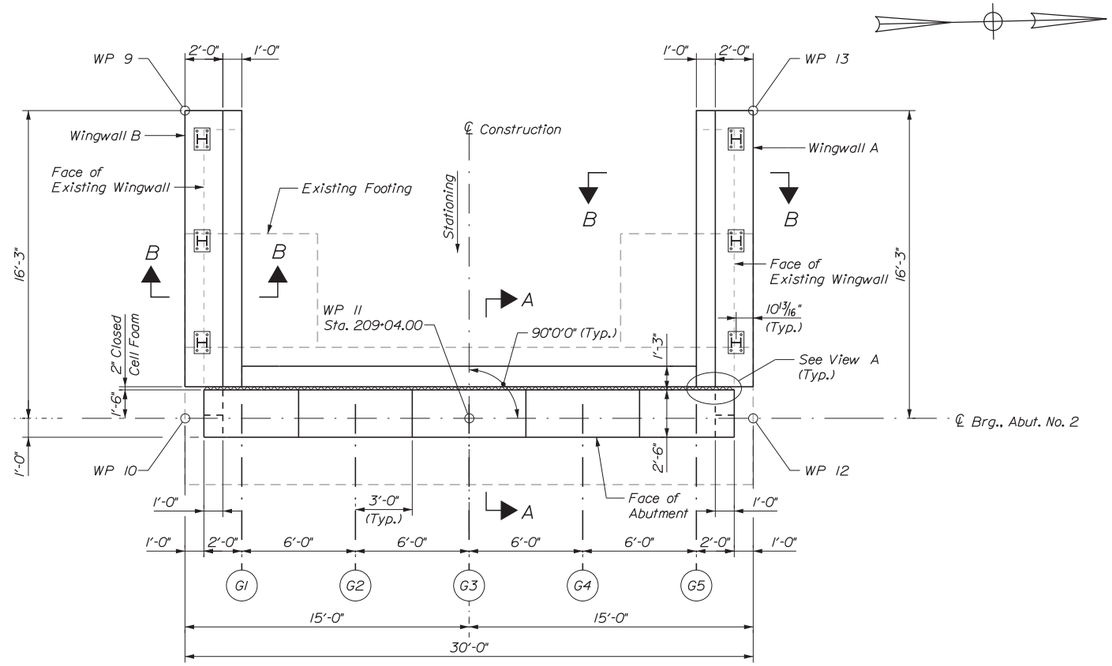

PLAN
Scale: 1/4" = 1'-0"

SHEET NOTES

1. See Abutment No. 1 Removal Sheet for Abutment Removal Notes.
2. See Abutment Wingwalls Reinforcement Sheet for Wingwall Reinforcement.
3. See Abutment No. 1 Repair and Modifications Sheet for Abutment Construction Notes.
4. See Miscellaneous Abutment Details Sheet for Sections A-A and B-B.
5. See Concrete Surface Repair Detail and Notes on Pier No. 2 Repair and Modifications Sheet.

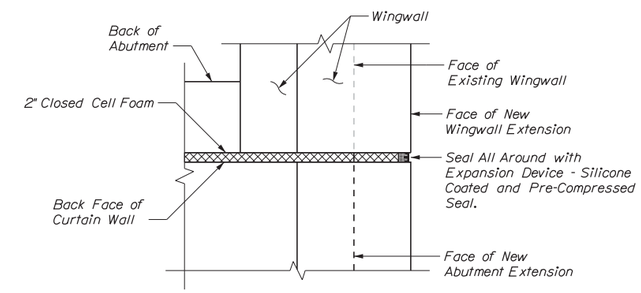

VIEW A
Scale: 3/4" = 1'-0"

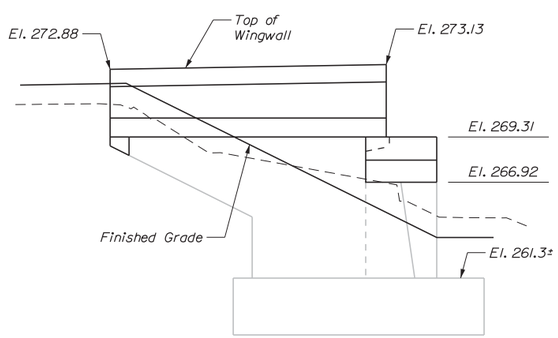

ELEVATION
WINGWALL B
Scale: 1/4" = 1'-0"

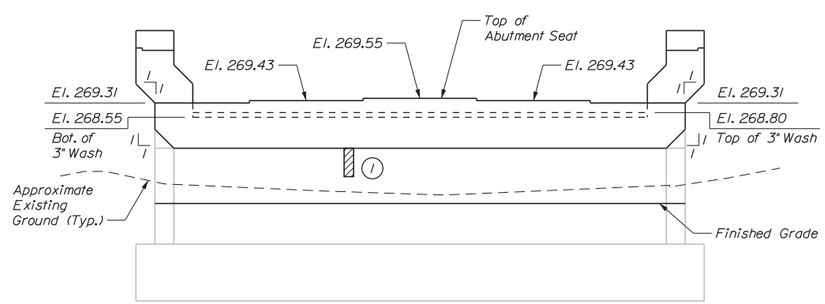

ELEVATION
Scale: 1/4" = 1'-0"

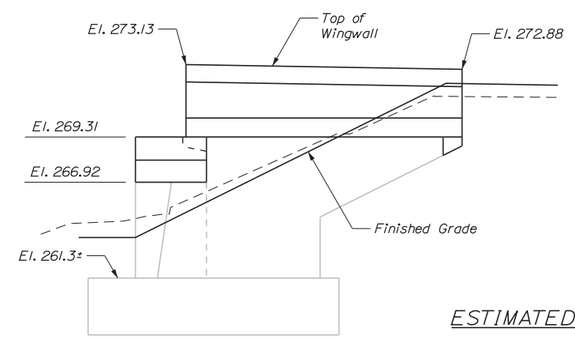

ELEVATION
WINGWALL A
Scale: 1/4" = 1'-0"

ESTIMATED REPAIR QUANTITIES (SF)

Abutment Surface Patch Repairs 6*

* Includes 5 S.F. Additional Repair Quantity As A Contingency

KEY

= Concrete Patch Repair (Item 518.10)

(#) = Square Foot Area of Repair

1 0 3
3/4" = 1'-0"
4 0 8
1/4" = 1'-0"

Date:12/31/2015

Filename: ...\st\planset\031_Abut2_02.dgn

Scale: AS NOTED

No.	Revision	By	Date

Designed by: vhb

CONSULTANT PROJECT MANAGER: T. Bryant

	By	Date		By	Date
Designed	MED	12/2015	Checked	GME	12/2015
Drawn	CLC	12/2015	In Charge of	TSB	12/2015

VANASSE HANGEN BRUSTLIN, INC.
500 Southborough Dr.
Suite 105B
South Portland, ME 04106
TEL (207) 889-3150
FAX (207) 253-5596

MAINE TURNPIKE

THE GOLD STAR MEMORIAL HIGHWAY

MTA PROJECT MANAGER: Ralph Norwood, IV

SUPERSTRUCTURE REPLACEMENT
MAPLE STREET UNDERPASS

ABUTMENT NO. 2
REPAIR AND MODIFICATIONS

VHB: 55068.00 SHEET NUMBER: 31

CONTRACT: 2016.04

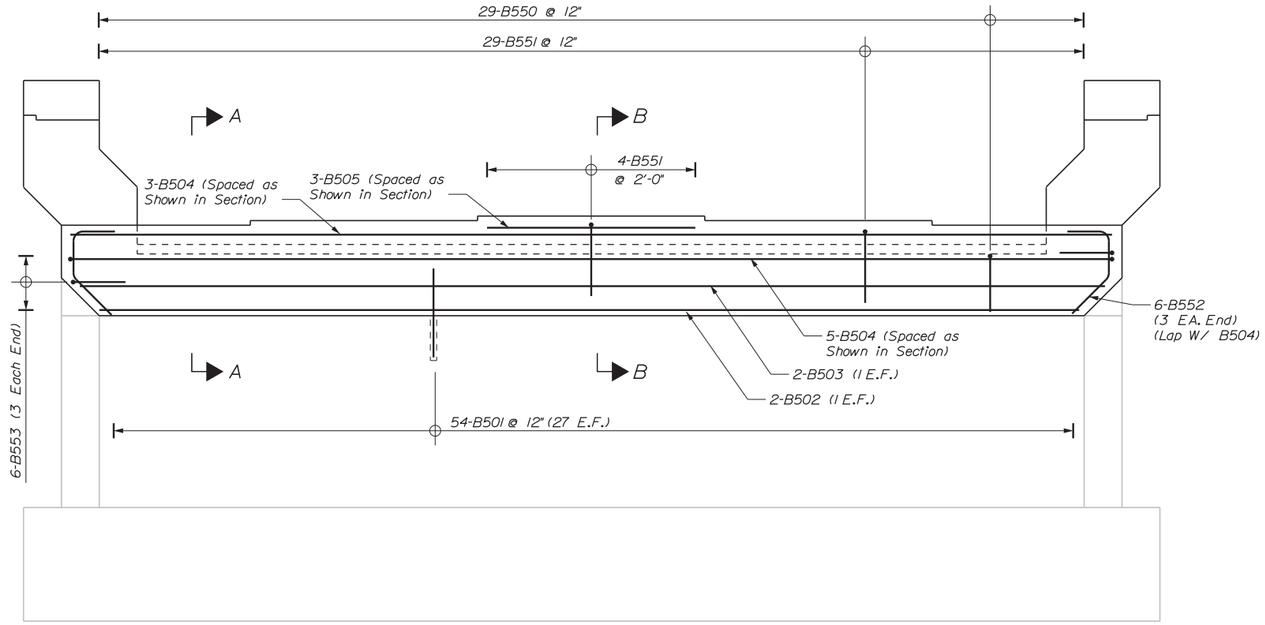

ELEVATION
Scale: 1/2" = 1'-0"

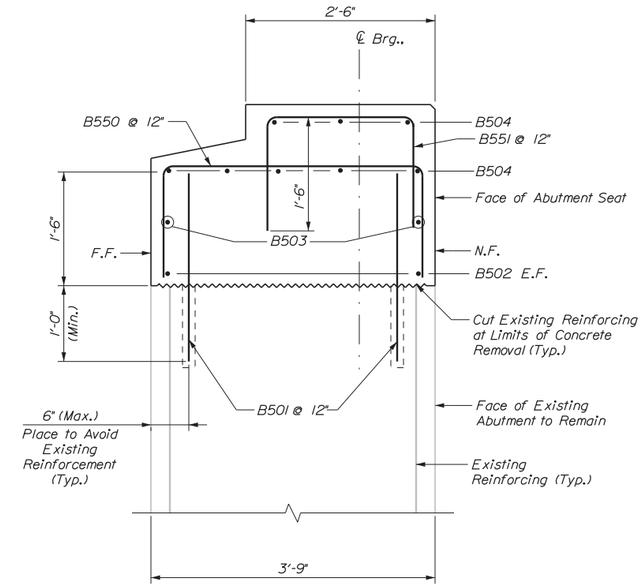

SECTION A-A
Scale: 1" = 1'-0"

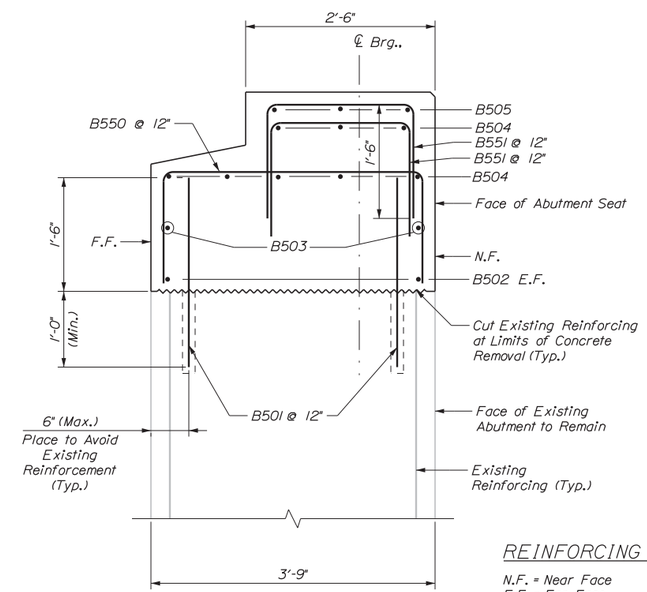

SECTION B-B
Scale: 1" = 1'-0"

REINFORCING KEY

N.F. = Near Face
F.F. = Far Face
E.F. = Each Face
▲ = Cut in Field

1 0 2
1" = 1'-0"
1 0 5
1/2" = 1'-0"

Scale: AS NOTED

No.	Revision	By	Date

Designed by: vhb

CONSULTANT PROJECT MANAGER: T. Bryant

	By	Date		By	Date
Designed	MED	12/2015	Checked	GME	12/2015
Drawn	CLC	12/2015	In Charge of	TSB	12/2015

VANASSE HANGEN BRUSTLIN, INC.
500 Southborough Dr.
Suite 105B
South Portland, ME 04106
TEL (207) 889-3150
FAX (207) 253-5596

MAINE TURNPIKE

THE GOLD STAR MEMORIAL HIGHWAY

MTA PROJECT MANAGER: Ralph Norwood, IV

SUPERSTRUCTURE REPLACEMENT
MAPLE STREET UNDERPASS

ABUTMENT NO. 2
REINFORCEMENT

VHB: 55068.00
CONTRACT: 2016.04

SHEET NUMBER: 32
32 OF 70

Date: 12/31/2015

Filename: ...\st\planset\032_Abut2_03.dgn

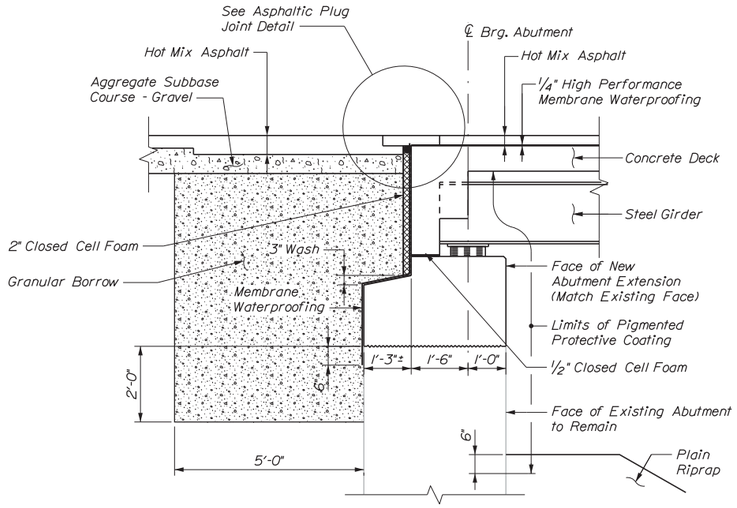

SECTION A-A

Scale: 1/2" = 1'-0"

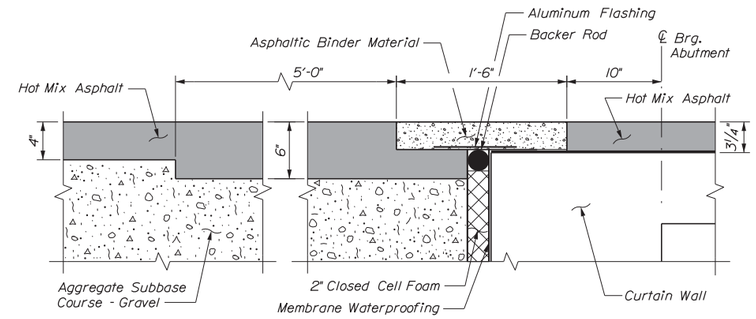

ASPHALTIC PLUG JOINT DETAIL

Scale: 1 1/2" = 1'-0"

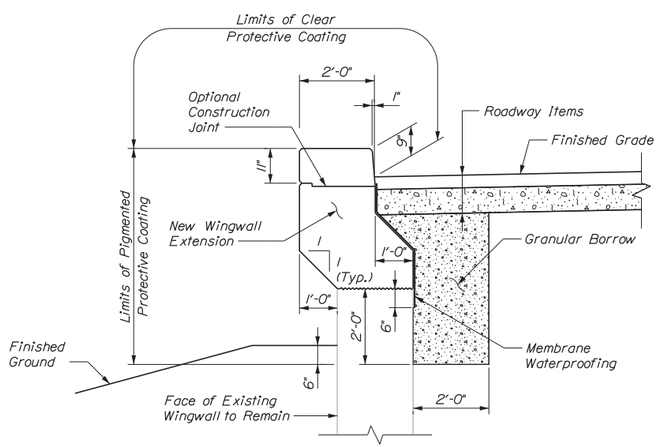

SECTION B-B

Scale: 1/2" = 1'-0"

1.5 0 1.5

1 1/2" = 1'-0"

1 0 5

1/2" = 1'-0"

Scale: AS NOTED

No.	Revision	By	Date

Designed by:

vhb

CONSULTANT PROJECT MANAGER: T. Bryant

	By	Date		By	Date
Designed	MED	12/2015	Checked	GME	12/2015
Drawn	CLC	12/2015	In Charge of	TSB	12/2015

VANASSE HANGEN BRUSTLIN, INC.
500 Southborough Dr.
Suite 105B
South Portland, ME 04106
TEL (207) 889-3150
FAX (207) 253-5596

MAINE TURNPIKE

THE GOLD STAR MEMORIAL HIGHWAY

MTA PROJECT MANAGER: Ralph Norwood, IV

SUPERSTRUCTURE REPLACEMENT
MAPLE STREET UNDERPASS

MISCELLANEOUS ABUTMENT DETAILS

VHB: 55068.00

SHEET NUMBER: 33

CONTRACT: 2016.04

Date: 12/31/2015
Filename: ...\033_Abut_Details_01.dgn

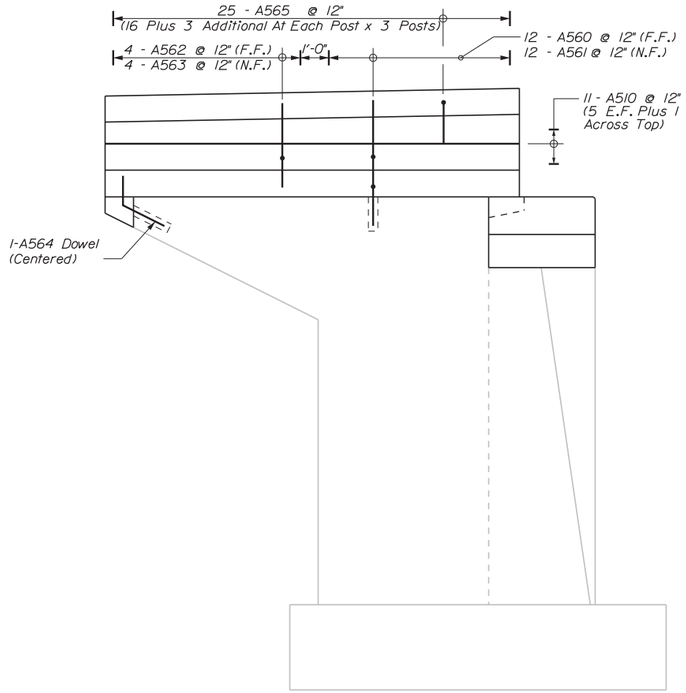

WINGWALL B ELEVATION

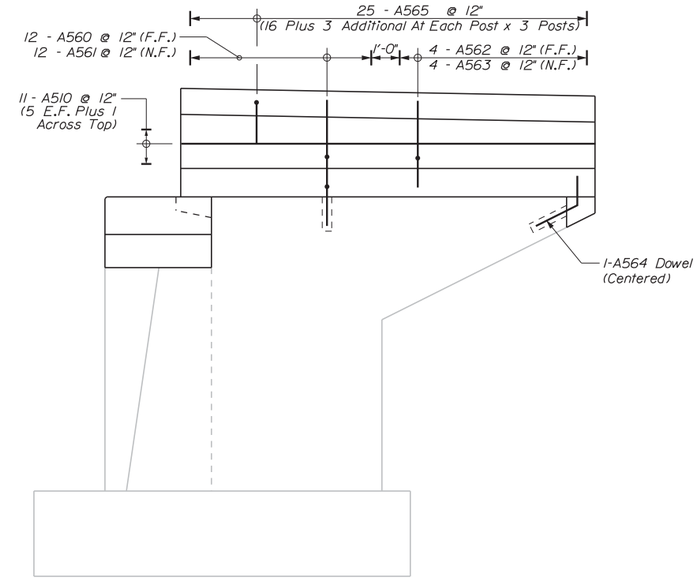

WINGWALL A ELEVATION

ABUTMENT NO. 1 WINGWALLS REINFORCEMENT

Scale: 3/8" = 1'-0"

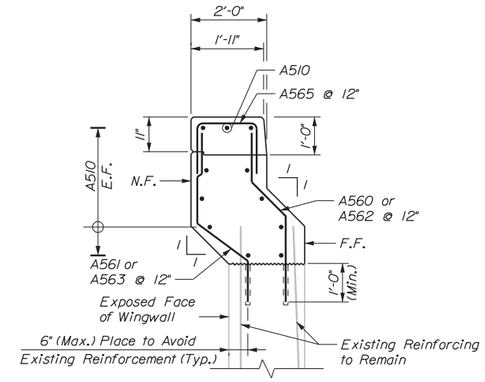

TYPICAL WINGWALL SECTION
ABUTMENT NO. 1

Scale: 1/2" = 1'-0"

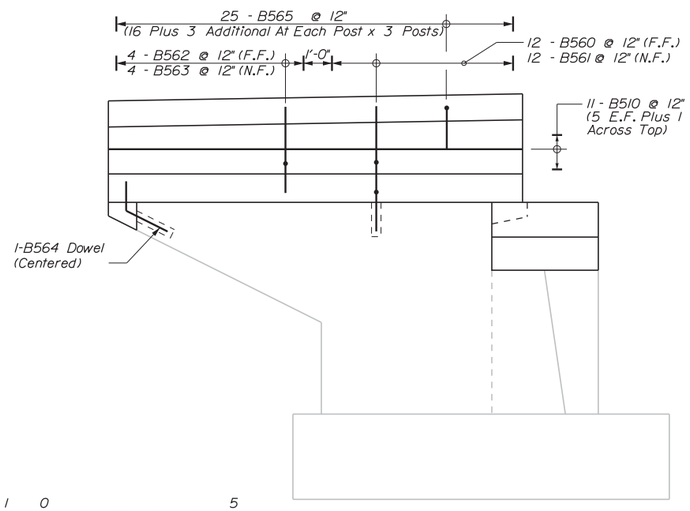

WINGWALL B ELEVATION

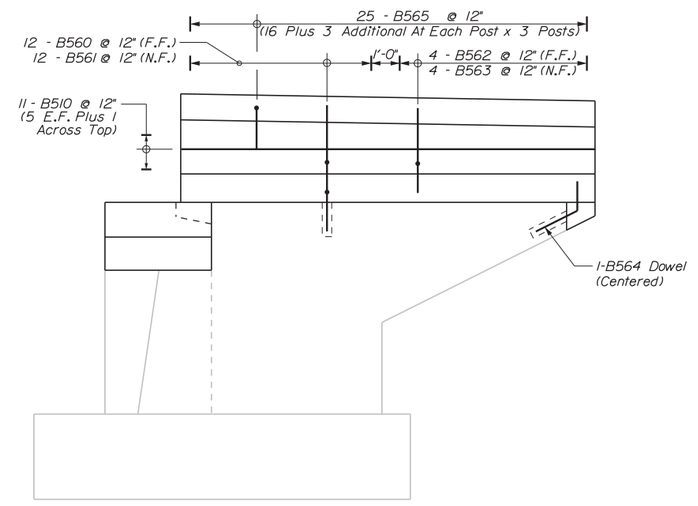

WINGWALL A ELEVATION

ABUTMENT NO. 2 WINGWALLS REINFORCEMENT

Scale: 3/8" = 1'-0"

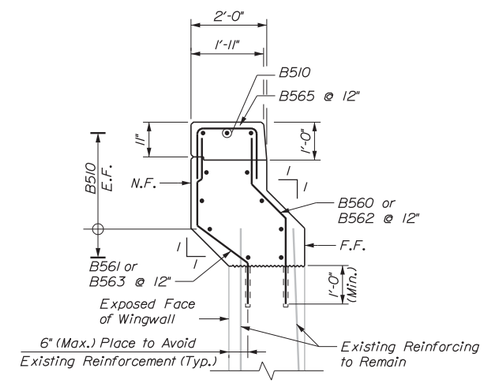

TYPICAL WINGWALL SECTION
ABUTMENT NO. 2

Scale: 1/2" = 1'-0"

1 0 5
1/2" = 1'-0"

1 0 7
3/8" = 1'-0"

REINFORCING KEY

N.F. = Near Face
F.F. = Far Face
E.F. = Each Face
▲ = Cut in Field

Date:12/31/2015

Filename: ...\st\planset\034_Wingwall_01.dgn

Scale: AS NOTED

No.	Revision	By	Date

Designed by:

vhb

CONSULTANT PROJECT MANAGER: T. Bryant

	By	Date		By	Date
Designed	MED	12/2015	Checked	GME	12/2015
Drawn	CLC	12/2015	In Charge of	TSB	12/2015

VANASSE HANGEN BRUSTLIN, INC.
500 Southborough Dr.
Suite 105B
South Portland, ME 04106
TEL (207) 889-3150
FAX (207) 253-5596

MAINE TURNPIKE

THE GOLD STAR MEMORIAL HIGHWAY

MTA PROJECT MANAGER: Ralph Norwood, IV

SUPERSTRUCTURE REPLACEMENT
MAPLE STREET UNDERPASS

ABUTMENT WINGWALLS REINFORCEMENT

VHB: 55068.00
CONTRACT: 2016.04

SHEET NUMBER: 34

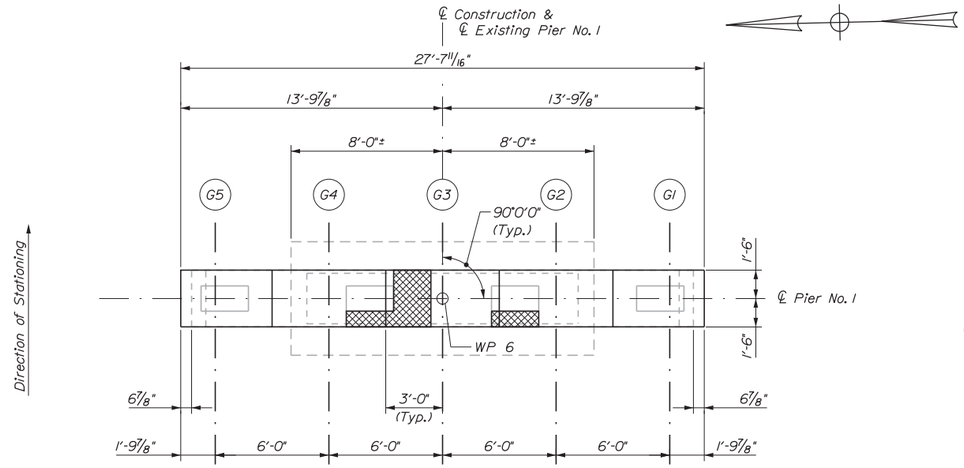

PIER NO. 1 - PLAN

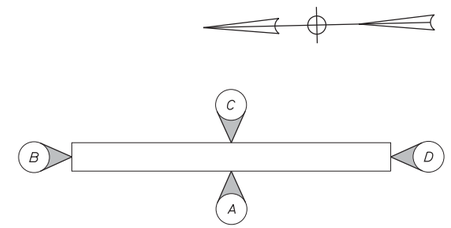

PIER ELEVATION KEY

PIER REPAIR AND MODIFICATIONS NOTES

1. Pier repair work shall include: providing access for pier inspection and pier surface patch repairs.
2. Where pier surface patch repairs are specified the work shall include removal of unsound concrete and placement and curing of the repair materials. Repairs shall be measured for payment under Item 518.20, Pier Surface Repairs.
3. All existing anchor rods shall be cut and removed to one inch above existing pedestals.
4. Actual repair areas will be determined by the Resident during construction. If pier surface patch repairs are required to extend more that 1/3 the width of the column stem the work shall be sequenced such that removal of the column concrete is limited to no more than 1/3 of the column width at any one time. The removal restrictions do not apply to the ends of the pier column stem. At the direction of the Resident, the removal restrictions may be waived if the work is performed while the superstructure is not in place.
5. Pier cap modifications shall not be performed when traffic is active on the roadway above unless authorized by the Resident.
6. Prior to the placement of pier extension concrete, The Contractor shall intentionally roughen the top surface of the existing pier caps to 1/4" anchor profile or as directed by The Resident. Cost for intentionally roughening surface shall be incidental to Item 502.23.
7. All exposed pier surfaces shall be coated with a protective coating for concrete surfaces as shown.
8. Bearing anchor rods shall be placed before installing diaphragms.
9. All excavation required for the pier repair and protective coating application shall be incidental to Item 518.20.
10. Prior to the placement of pier extension concrete, the Contractor shall prepare the area in accordance with Special Provision Section 518. All costs for removal of unsound concrete and surface preparation shall be incidental to Item 502.23.

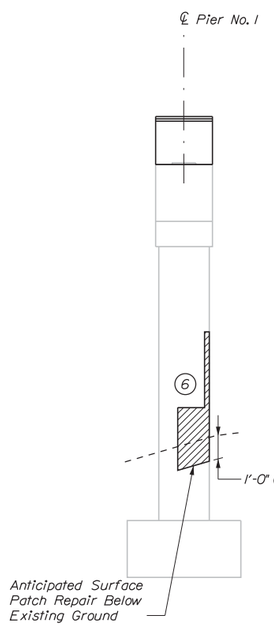

ELEVATION B

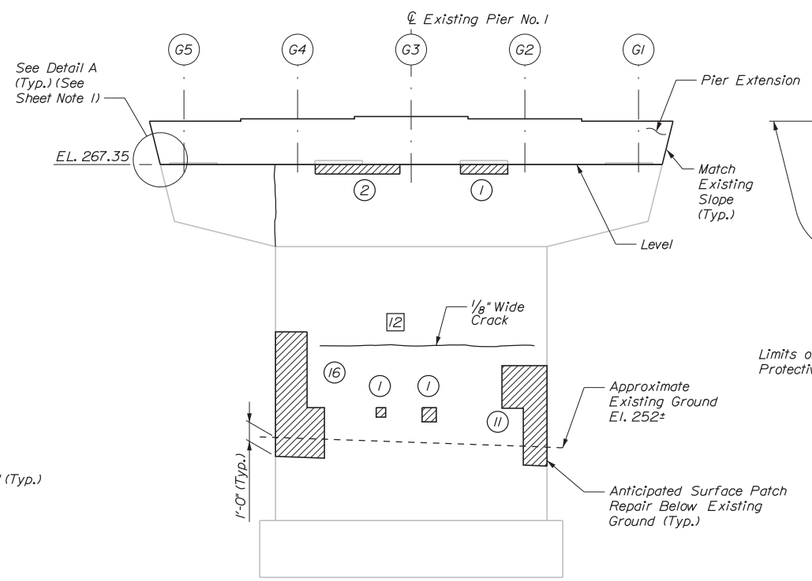

ELEVATION A

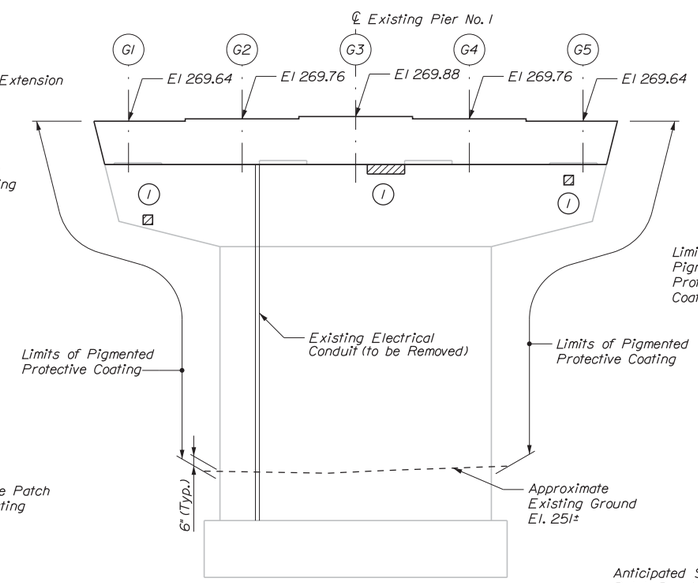

ELEVATION C

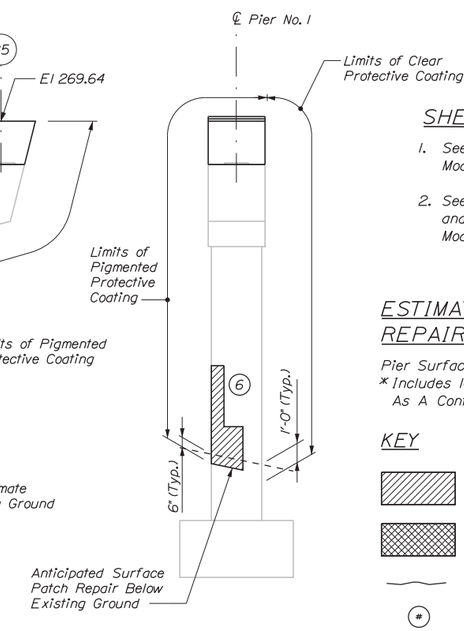

ELEVATION D

SHEET NOTES

1. See Pier No. 3 Repair and Modifications Sheet for Detail A.
2. See Concrete Surface Repair Detail and Notes on Pier No. 2 Repair and Modifications Sheet.

ESTIMATED REPAIR QUANTITIES (SF)

Pier Surface Patch Repairs 57*

* Includes 10 S.F. Additional Repair Quantity As A Contingency

KEY

- = Concrete Patch Repair (Item 518.20)
- = Top of Pier Cap Surface Patch Repair (See Pier Repair and Modifications Note 10)
- = Limit of Crack Repair
- (#) = Square Foot Area of Repair
- [#] = Linear Feet of Crack Repair

Date:12/31/2015

Filename: ...\st\planset\035_pier1_01.dgn

Scale: 4 0 8 — 1/4" = 1'-0"

No.	Revision	By	Date

Designed by: vhb

CONSULTANT PROJECT MANAGER: T. Bryant

	By	Date		By	Date
Designed	MED	12/2015	Checked	GME	12/2015
Drawn	CMD	12/2015	In Charge of	TSB	12/2015

VANASSE HANGEN BRUSTLIN, INC.
500 Southborough Dr.
Suite 105B
South Portland, ME 04106
TEL (207) 889-3150
FAX (207) 253-5596

MAINE TURNPIKE

THE GOLD STAR MEMORIAL HIGHWAY

MTA PROJECT MANAGER: Ralph Norwood, IV

SUPERSTRUCTURE REPLACEMENT
MAPLE STREET UNDERPASS

PIER NO. 1 REPAIR AND MODIFICATIONS

VHB: 55068.00

CONTRACT: 2016.04

SHEET NUMBER: 35

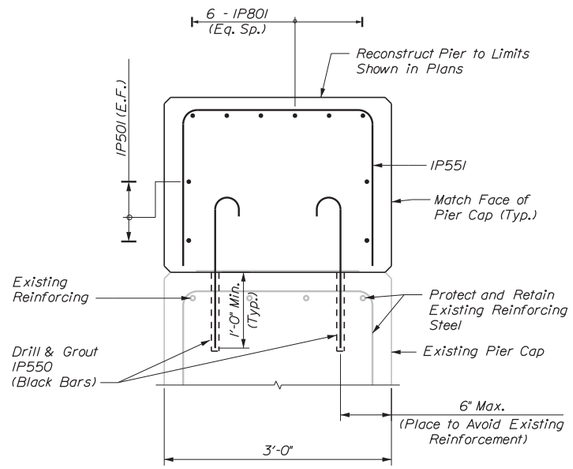

SECTION A-A
Scale: 1" = 1'-0"

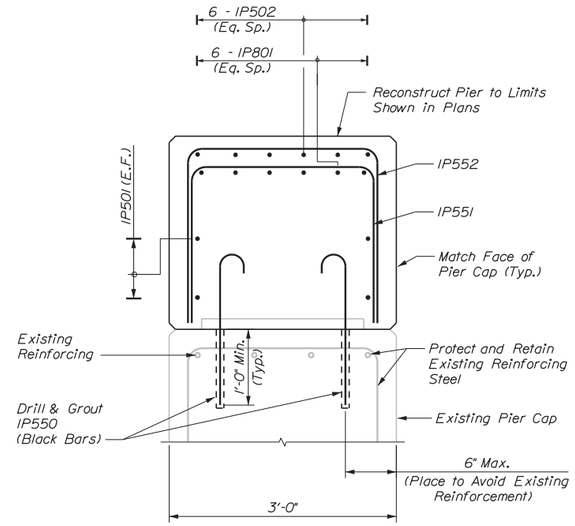

SECTION B-B
Scale: 1" = 1'-0"

NOTE

1. Adjust longitudinal reinforcement to ensure anchor rods and reinforcement do not conflict.

SHEET NOTE

1. See Pier Repair and Modifications Notes on Pier No. 1 Repair and Modifications Sheet.

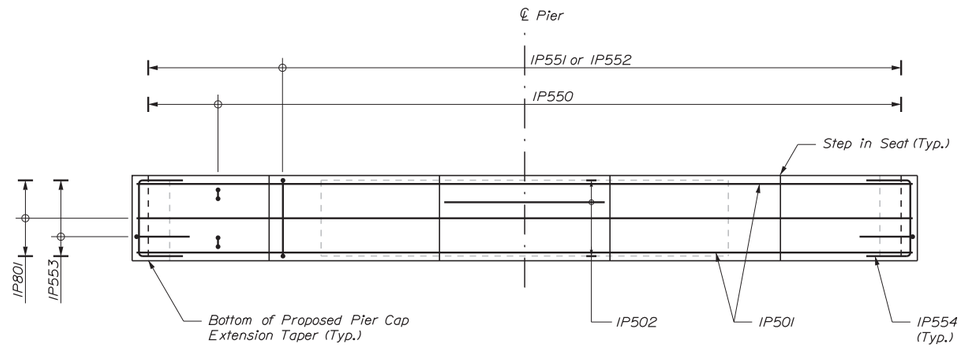

PLAN
Scale: 3/8" = 1'0"

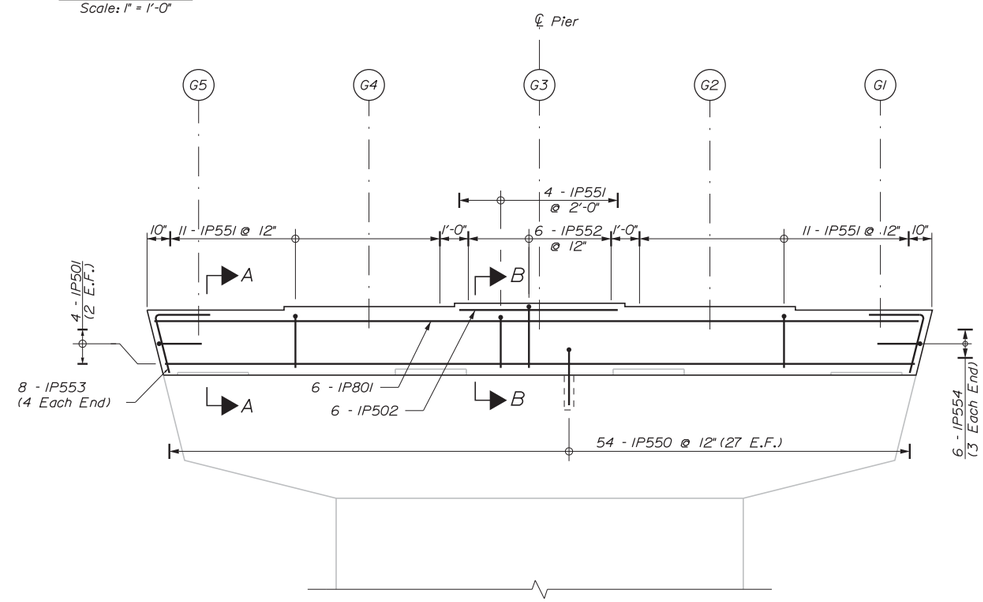

ELEVATION
Scale: 3/8" = 1'0"

REINFORCING KEY

N.F. = Near Face
F.F. = Far Face
E.F. = Each Face
▲ = Cut in Field

1 0 2
1" = 1'-0"
1 0 7
3/8" = 1'-0"

Date:12/31/2015

Filename: ...\st\planset\036_pier1_02.dgn

Scale: AS NOTED

No.	Revision	By	Date

Designed by: vhb

CONSULTANT PROJECT MANAGER: T. Bryant

	By	Date		By	Date
Designed	MED	12/2015	Checked	GME	12/2015
Drawn	CLC	12/2015	In Charge of	TSB	12/2015

VANASSE HANGEN BRUSTLIN, INC.
500 Southborough Dr.
Suite 105B
South Portland, ME 04106
TEL (207) 889-3150
FAX (207) 253-5596

MAINE TURNPIKE

THE GOLD STAR MEMORIAL HIGHWAY

MTA PROJECT MANAGER: Ralph Norwood, IV

SUPERSTRUCTURE REPLACEMENT
MAPLE STREET UNDERPASS

PIER CAP NO. 1 REINFORCEMENT

VHB: 55068.00
CONTRACT: 2016.04

SHEET NUMBER: 36

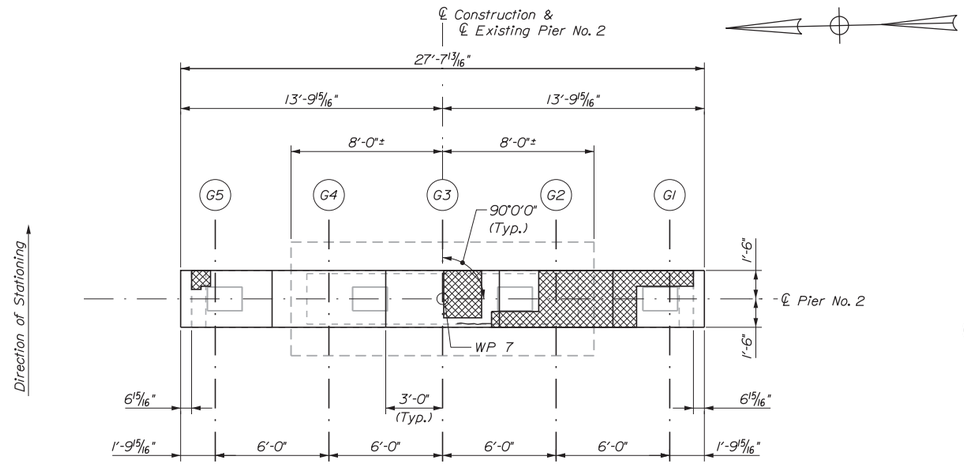

PIER NO. 2 - PLAN

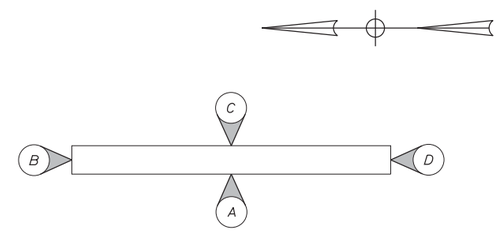

PIER ELEVATION KEY

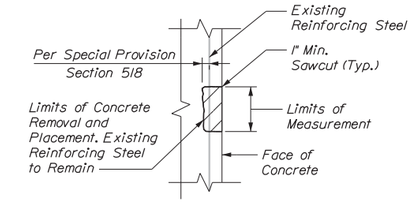

CONCRETE SURFACE REPAIR DETAIL

Not to Scale

CONCRETE SURFACE REPAIR NOTES

1. Prior to the start of concrete removal the Resident and the Contractor shall sound the concrete and agree on the repair limits. Estimated repair quantity may increase at the Resident's discretion.
2. Saw cut 1" deep cuts along limits of removal.
3. Chip concrete to depth shown. If the removal limits change during the demolition process the Contractor shall notify the Resident. The Resident and Contractor shall agree on the revised pay limits prior to the Contractor continuing the removal.
4. Prepare and patch repair areas with Class AAA concrete.
5. Perform general finishing.

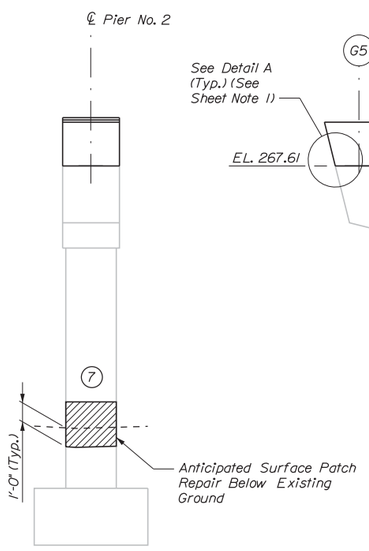

ELEVATION B

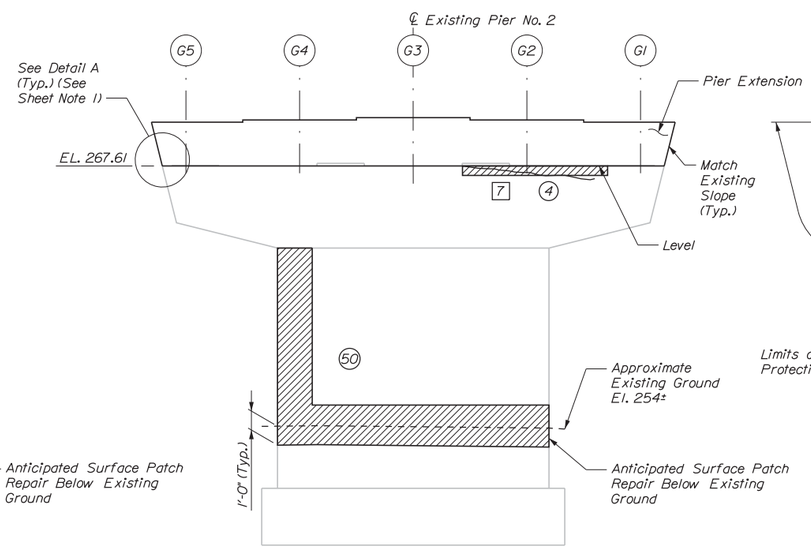

ELEVATION A

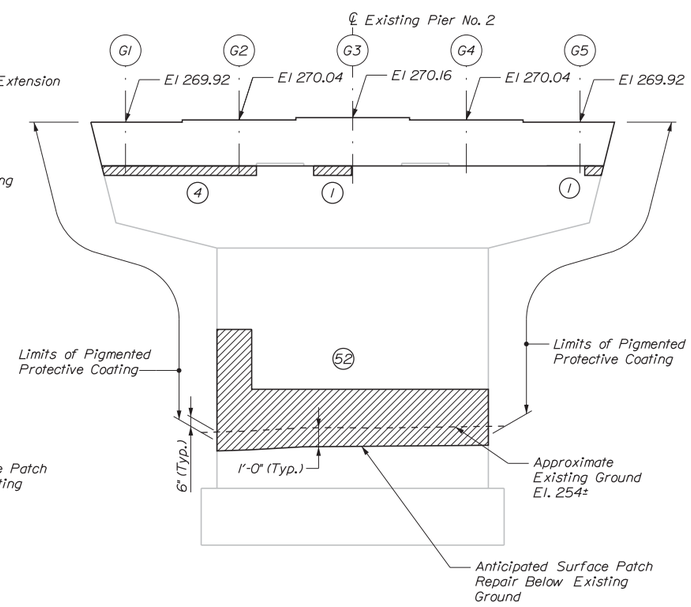

ELEVATION C

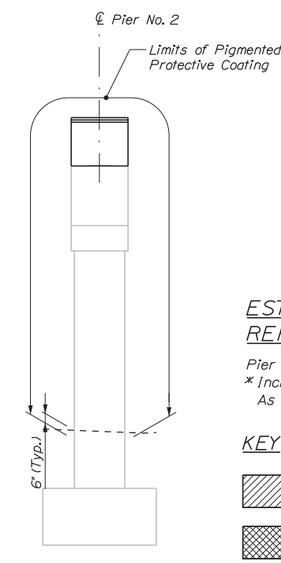

ELEVATION D

SHEET NOTES

1. See Pier No. 3 Repair and Modifications Sheet for Detail A.
2. See Pier Repair and Modifications Notes on Pier No. 1 Repair and Modifications Sheet.

ESTIMATED REPAIR QUANTITIES (SF)

Pier Surface Patch Repairs	144 *

* Includes 25 S.F. Additional Repair Quantity As A contingency

KEY

- = Concrete Patch Repair (Item 518.20)
- = Top of Pier Cap Surface Patch Repair (See Pier Repair and Modifications Note 10)
- = Limit of Crack Repair
- (#) = Square Foot Area of Repair
- [#] = Linear Feet of Crack Repair

Scale: 4 0 8
1/4" = 1'-0"

No.	Revision	By	Date

Designed by: vhb

CONSULTANT PROJECT MANAGER: T. Bryant

	By	Date		By	Date
Designed	MED	12/2015	Checked	GME	12/2015
Drawn	CMD	12/2015	In Charge of	TSB	12/2015

VANASSE HANGEN BRUSTLIN, INC.
500 Southborough Dr.
Suite 105B
South Portland, ME 04106
TEL (207) 889-3150
FAX (207) 253-5596

MAINE TURNPIKE

THE GOLD STAR MEMORIAL HIGHWAY

MTA PROJECT MANAGER: Ralph Norwood, IV

SUPERSTRUCTURE REPLACEMENT
MAPLE STREET UNDERPASS

PIER NO. 2 REPAIR AND MODIFICATIONS

VHB: 55068.00
CONTRACT: 2016.04

SHEET NUMBER: 37
37 OF 70

Date: 12/31/2015

Filename: ...\st\planset\037_pier2_01.dgn

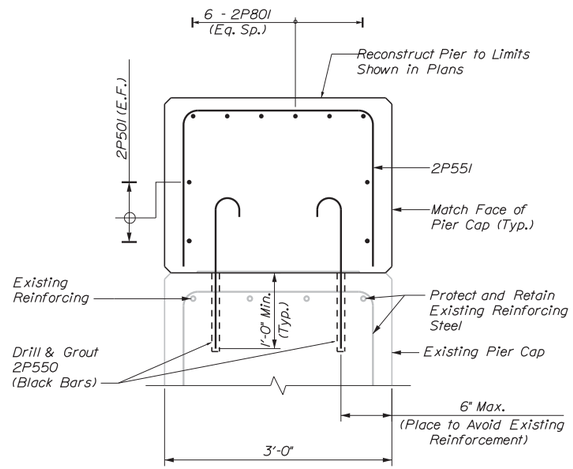

SECTION A-A
Scale: 1" = 1'-0"

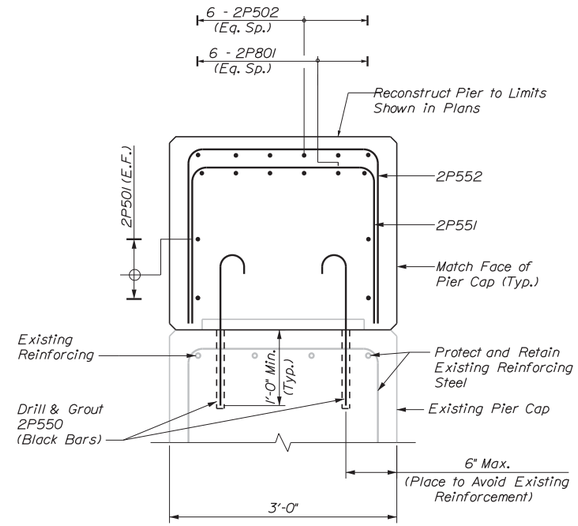

SECTION B-B
Scale: 1" = 1'-0"

NOTE

1. Adjust longitudinal reinforcement to ensure anchor rods and reinforcement do not conflict.

SHEET NOTE

1. See Pier Repair and Modifications Notes on Pier No. 1 Repair and Modifications Sheet.

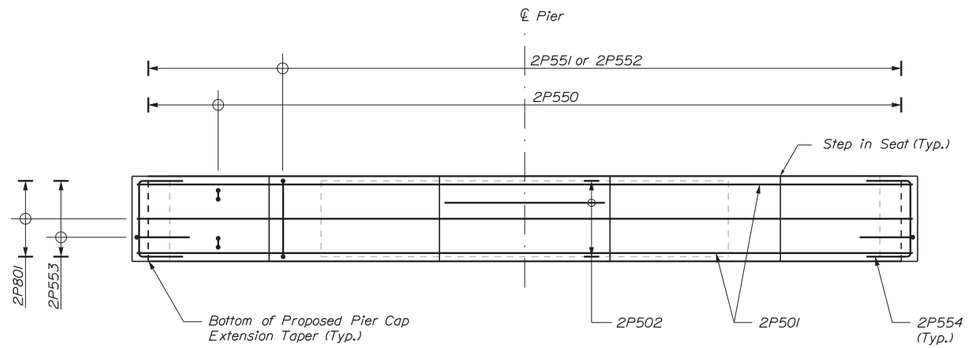

PLAN
Scale: 3/8" = 1'0"

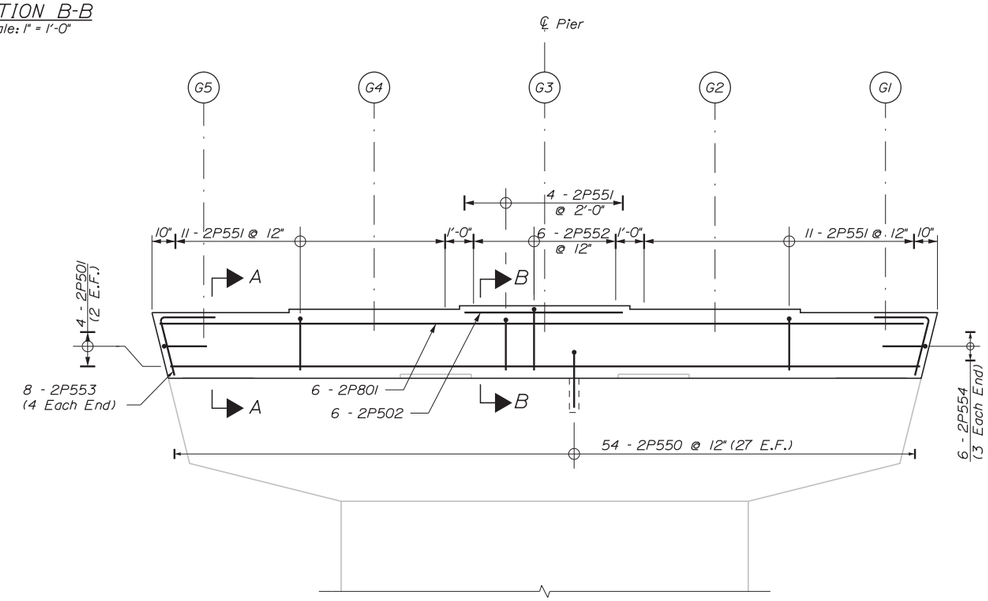

ELEVATION
Scale: 3/8" = 1'0"

REINFORCING KEY

N.F. = Near Face
F.F. = Far Face
E.F. = Each Face
▲ = Cut in Field

1 0 2
1" = 1'-0"
1 0 7
3/8" = 1'-0"

Scale: As Noted

No.	Revision	By	Date

Designed by: vhb

CONSULTANT PROJECT MANAGER: T. Bryant

	By	Date		By	Date
Designed	MED	12/2015	Checked	GME	12/2015
Drawn	CLC	12/2015	In Charge of	TSB	12/2015

VANASSE HANGEN BRUSTLIN, INC.
500 Southborough Dr.
Suite 105B
South Portland, ME 04106
TEL (207) 889-3150
FAX (207) 253-5596

MAINE TURNPIKE

THE GOLD STAR MEMORIAL HIGHWAY

MTA PROJECT MANAGER: Ralph Norwood, IV

SUPERSTRUCTURE REPLACEMENT
MAPLE STREET UNDERPASS

PIER CAP NO. 2 REINFORCEMENT

VHB: 55068.00
CONTRACT: 2016.04

SHEET NUMBER: 38
38 OF 70

Date: 12/31/2015

Filename: ...\st\planset\038_pier2_02.dgn

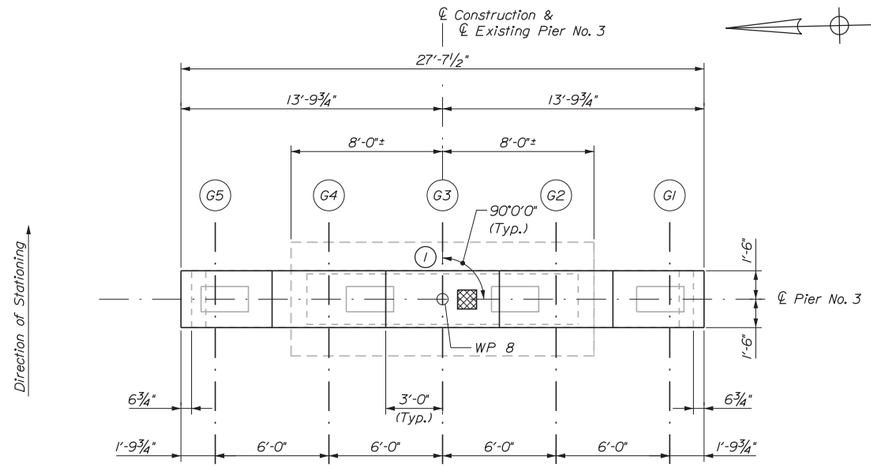

PIER NO. 3 - PLAN

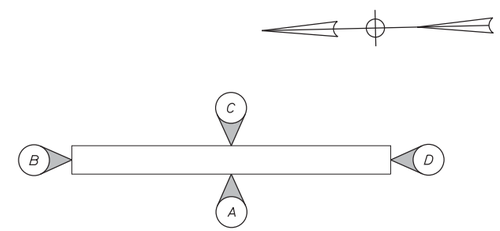

PIER ELEVATION KEY

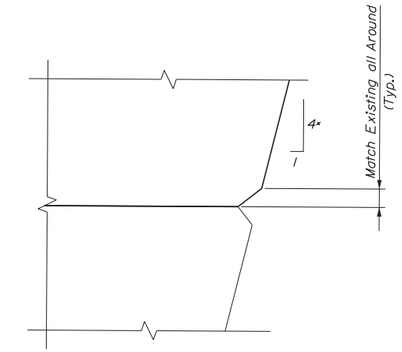

DETAIL A

* Match Existing
Not to Scale

SHEET NOTES

1. See Concrete Surface Repair Detail and Notes on Pier No. 2 Repair and Modifications Sheet.

2. See Pier Repair and Modifications Notes on Pier No. 1 Repair and Modifications Sheet.

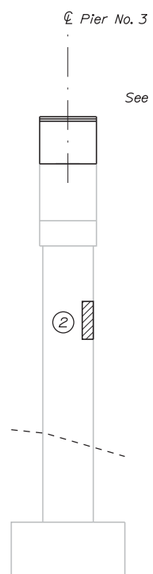

ELEVATION B

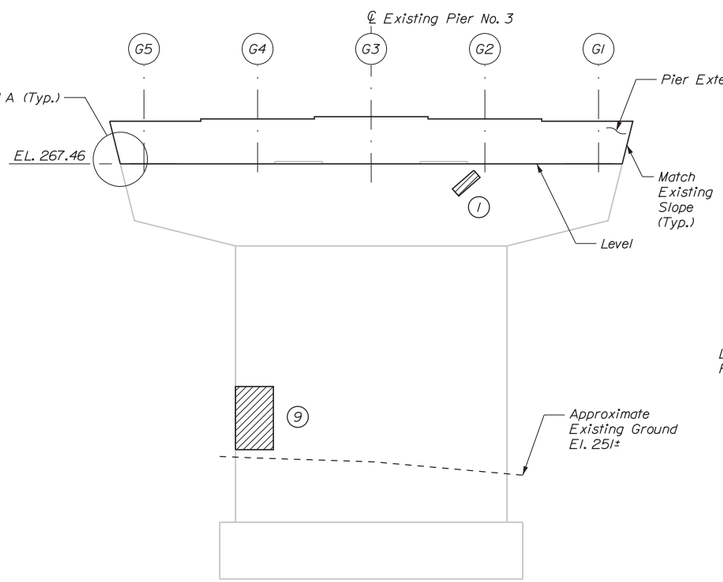

ELEVATION A

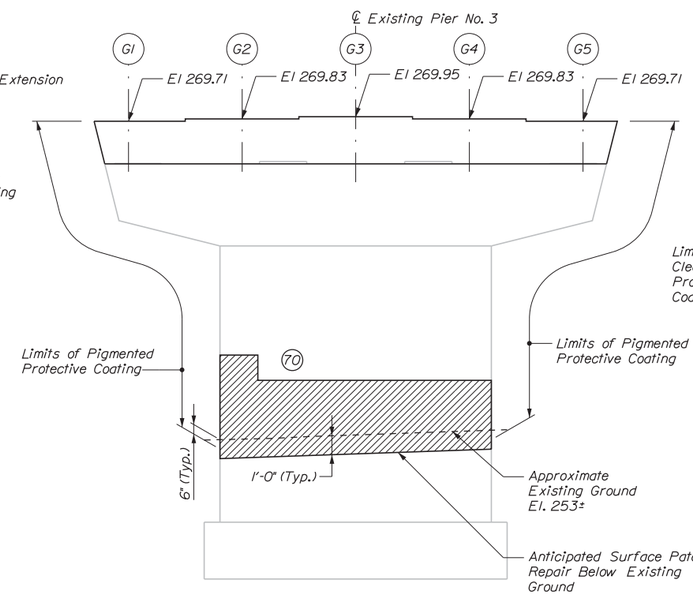

ELEVATION C

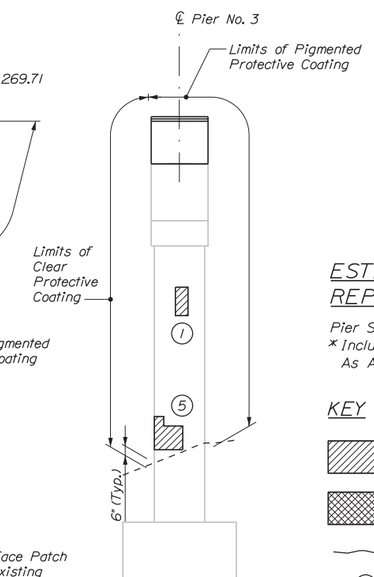

ELEVATION D

ESTIMATED REPAIR QUANTITIES (SF)

Pier Surface Patch Repairs 108 *
* Includes 20 S.F. Additional Repair Quantity As A contingency

KEY

= Concrete Patch Repair (Item 518.20)

= Top of Pier Cap Surface Patch Repair (See Pier Repair and Modifications Note 10)

= Limit of Crack Repair

(#) = Square Foot Area of Repair

[#] = Linear Feet of Crack Repair

Date:12/31/2015

Filename: ...\st\planset\039_pier3_01.dgn

Scale: 4 0 8
1/4" = 1'-0"

No.	Revision	By	Date

Designed by: vhb

CONSULTANT PROJECT MANAGER: T. Bryant

	By	Date		By	Date
Designed	MED	12/2015	Checked	GME	12/2015
Drawn	CMD	12/2015	In Charge of	TSB	12/2015

VANASSE HANGEN BRUSTLIN, INC.
500 Southborough Dr.
Suite 105B
South Portland, ME 04106
TEL (207) 889-3150
FAX (207) 253-5596

MAINE TURNPIKE

THE GOLD STAR MEMORIAL HIGHWAY

MTA PROJECT MANAGER: Ralph Norwood, IV

SUPERSTRUCTURE REPLACEMENT
MAPLE STREET UNDERPASS

PIER NO. 3 REPAIR AND MODIFICATIONS

VHB: 55068.00
CONTRACT: 2016.04

SHEET NUMBER: 39
39 OF 70

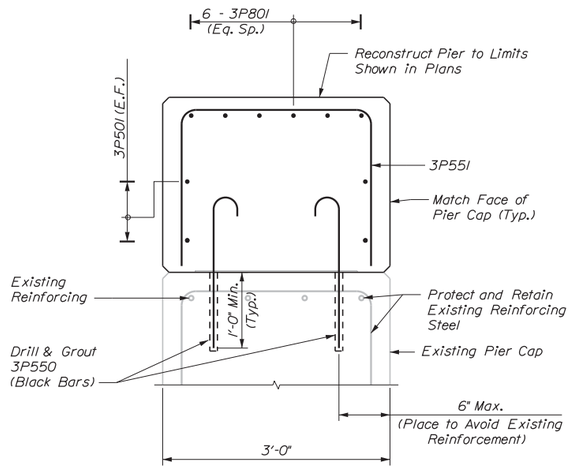

SECTION A-A
Scale: 1" = 1'-0"

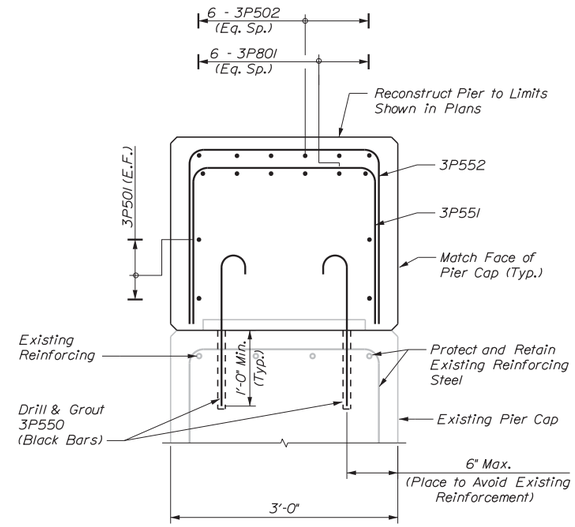

SECTION B-B
Scale: 1" = 1'-0"

NOTE

1. Adjust longitudinal reinforcement to ensure anchor rods and reinforcement do not conflict.

SHEET NOTE

1. See Pier Repair and Modifications Notes on Pier No. 1 Repair and Modifications Sheet.

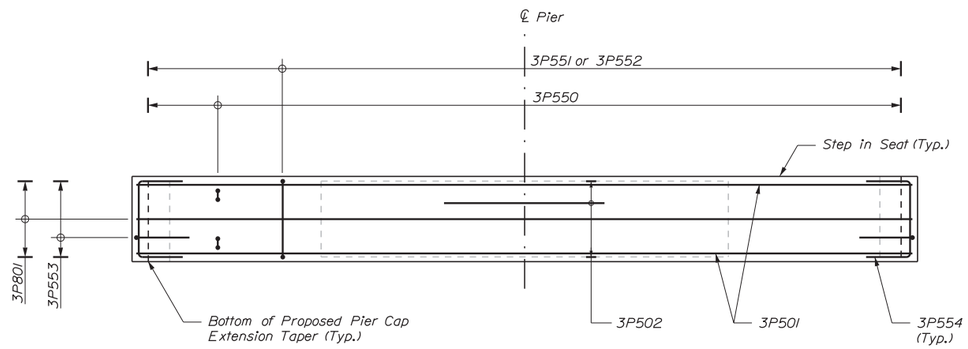

PLAN
Scale: 3/8" = 1'0"

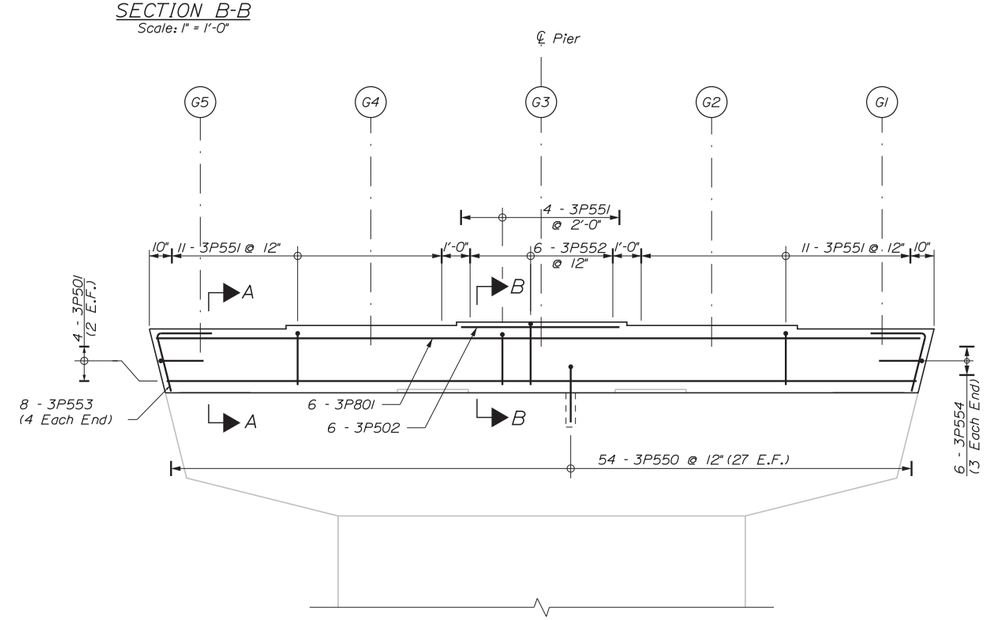

ELEVATION
Scale: 3/8" = 1'0"

REINFORCING KEY

N.F. = Near Face
F.F. = Far Face
E.F. = Each Face
▲ = Cut in Field

1 0 2
1" = 1'-0"
1 0 7
3/8" = 1'-0"

Scale: As Noted

No.	Revision	By	Date

Designed by: vhb

CONSULTANT PROJECT MANAGER: T. Bryant

	By	Date		By	Date
Designed	MED	12/2015	Checked	GME	12/2015
Drawn	CLC	12/2015	In Charge of	TSB	12/2015

VANASSE HANGEN BRUSTLIN, INC.
500 Southborough Dr.
Suite 105B
South Portland, ME 04106
TEL (207) 889-3150
FAX (207) 253-5596

MAINE TURNPIKE

THE GOLD STAR MEMORIAL HIGHWAY

MTA PROJECT MANAGER: Ralph Norwood, IV

SUPERSTRUCTURE REPLACEMENT
MAPLE STREET UNDERPASS

PIER CAP NO. 3 REINFORCEMENT

VHB: 55068.00
CONTRACT: 2016.04

SHEET NUMBER: 40
40 OF 70

Date: 12/31/2015

Filename: ...\st\planset\040_pier3_02.dgn

ELASTOMERIC BEARING NOTES

1. Elastomer shall be virgin Neoprene (Polychloroprene) with a durometer of 50.
2. Vulcanizing of the elastomer to the steel plates shall be done during the primary mold process.
3. Masonry plates, sole plates, and load plates shall meet the requirements of ASTM A709/A709M, Grade 50.
4. Horizontal PTFE at pier expansion bearings shall be dimpled and lubricated. Lubrication shall be supplied and installed per the bearing manufacturers recommendation to ensure a coefficient of friction less than or equal to 0.04 at 68 degrees F. Cost included in Bearing item.
5. All bearings shall be marked prior to shipping. The marks shall include the bearing location on the bridge and a direction arrow which points upstation. All marks shall be permanent and shall be visible after the bearing is installed.
6. Bearings shall be covered during transit.
7. All necessary precautions shall be taken to protect bearing components from field weld flash and spatter.
8. The bearings are designed so that the superstructure may be erected when the ambient air temperature is within the range of 65 degrees F and 90 degrees F. If the ambient air temperature is outside this range, the bridge shall be jacked and the bearings shall be reset as directed by the Resident.
9. Masonry plates, sole plates and load plates shall be painted (shop applied). See Special Provision Section 506.

ANCHOR ROD NOTES

1. All anchor rods, nuts, and plate washers shall be galvanized after fabrication in accordance with ASTM A153. Anchor rods shall be fully threaded.
2. Burr threads on anchor rods after nuts tightened snug to prevent removal. Touch up damaged galvanized areas with zinc-rich paint. Cost included in Bearing item.
3. The Contractor shall adjust longitudinal reinforcement in pier cap to ensure anchor rods and reinforcement do not conflict. Cost included in the Bearing item.
4. Anchor rods shall be placed prior to installing girder end diaphragms.

BEARING DESIGN CRITERIA		
LOADS	ABUTMENTS	PIERS
Unfactored Dead Load (Max.)	19.82k	66.46k
Unfactored Live Load (Max.)	56.97k	97.69k
DESIGN METHOD A		

ELASTOMERIC BEARING

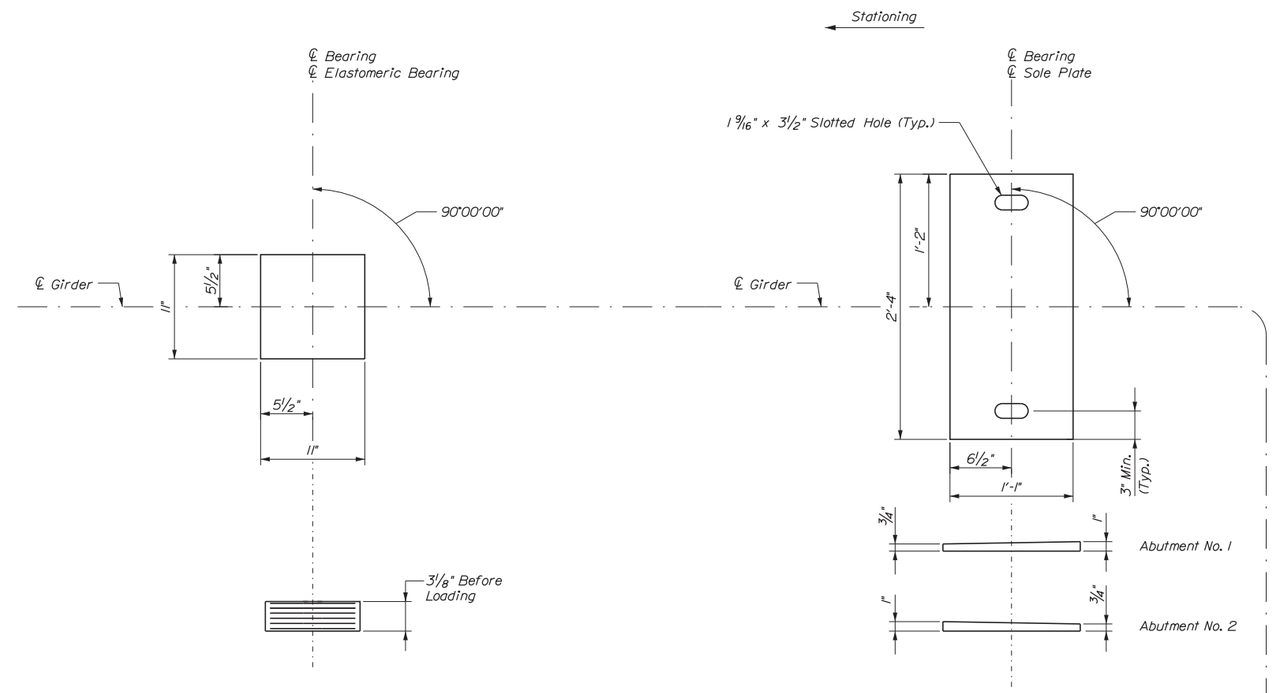

BEVELED SOLE PLATE

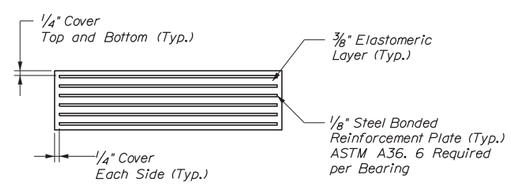

ELASTOMERIC BEARING DETAIL
Not to Scale

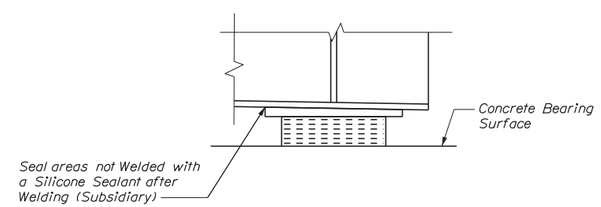

SECTION A-A

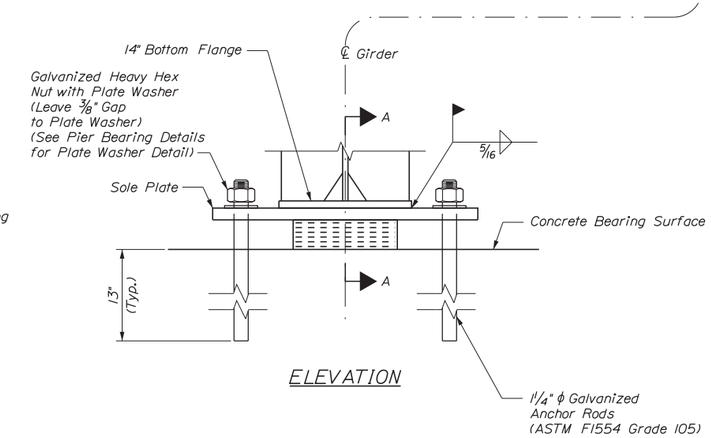

ELEVATION

ABUTMENT BEARINGS (EXPANSION)

Date:12/31/2015

Filename: ...\st\planset\041_bearing_01.dgn

Scale: 1 0 1
1½" = 1'-0"

No.	Revision	By	Date

Designed by: vhb

CONSULTANT PROJECT MANAGER: T. Bryant

	By	Date		By	Date
Designed	MED	12/2015	Checked	GME	12/2015
Drawn	CMD	12/2015	In Charge of	TSB	12/2015

VANASSE HANGEN BRUSTLIN, INC.
500 Southborough Dr.
Suite 105B
South Portland, ME 04106
TEL (207) 889-3150
FAX (207) 253-5596

MAINE TURNPIKE

THE GOLD STAR MEMORIAL HIGHWAY

MTA PROJECT MANAGER: Ralph Norwood, IV

SUPERSTRUCTURE REPLACEMENT
MAPLE STREET UNDERPASS

ABUTMENT BEARING DETAILS

VHB: 55068.00
CONTRACT: 2016.04

SHEET NUMBER: 41

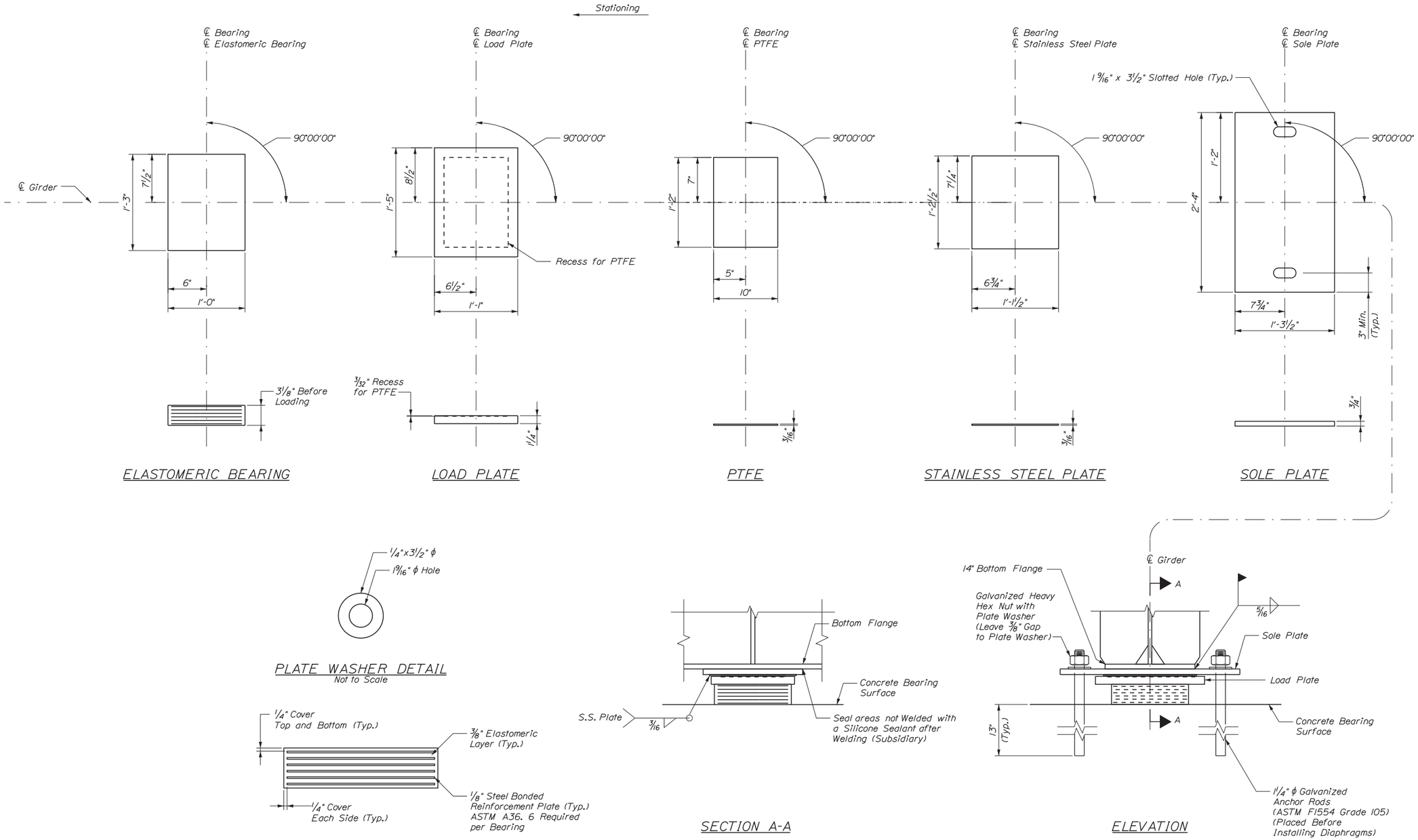

SHEET NOTE

1. See Elastomeric Bearing and Anchor Rod Notes on Abutment Bearing Details Sheet.

Date:12/31/2015

Filename: ...\st\planset\042_bearing_02.dgn

Scale: 1 0 1 — 1 1/2" = 1'-0"

No.	Revision	By	Date

Designed by: vhb

CONSULTANT PROJECT MANAGER: T. Bryant

	By	Date		By	Date
Designed	MED	12/2015	Checked	GME	12/2015
Drawn	CMD	12/2015	In Charge of	TSB	12/2015

VANASSE HANGEN BRUSTLIN, INC.
500 Southborough Dr.
Suite 105B
South Portland, ME 04106
TEL (207) 889-3150
FAX (207) 253-5596

MAINE TURNPIKE

THE GOLD STAR MEMORIAL HIGHWAY

MTA PROJECT MANAGER: Ralph Norwood, IV

SUPERSTRUCTURE REPLACEMENT
MAPLE STREET UNDERPASS

PIER BEARING DETAILS

VHB: 55068.00
CONTRACT: 2016.04

SHEET NUMBER: 42

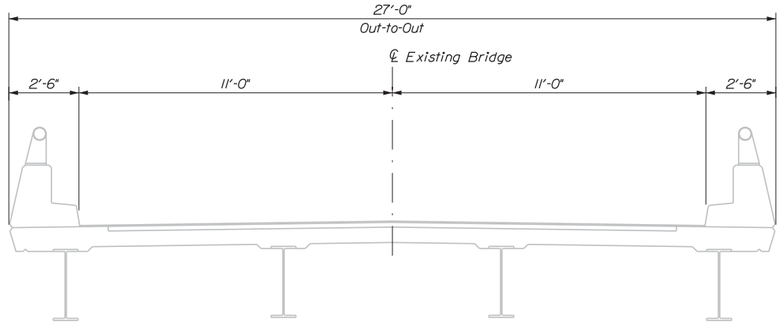

EXISTING SUPERSTRUCTURE SECTION
Scale: 3/8" = 1'-0"

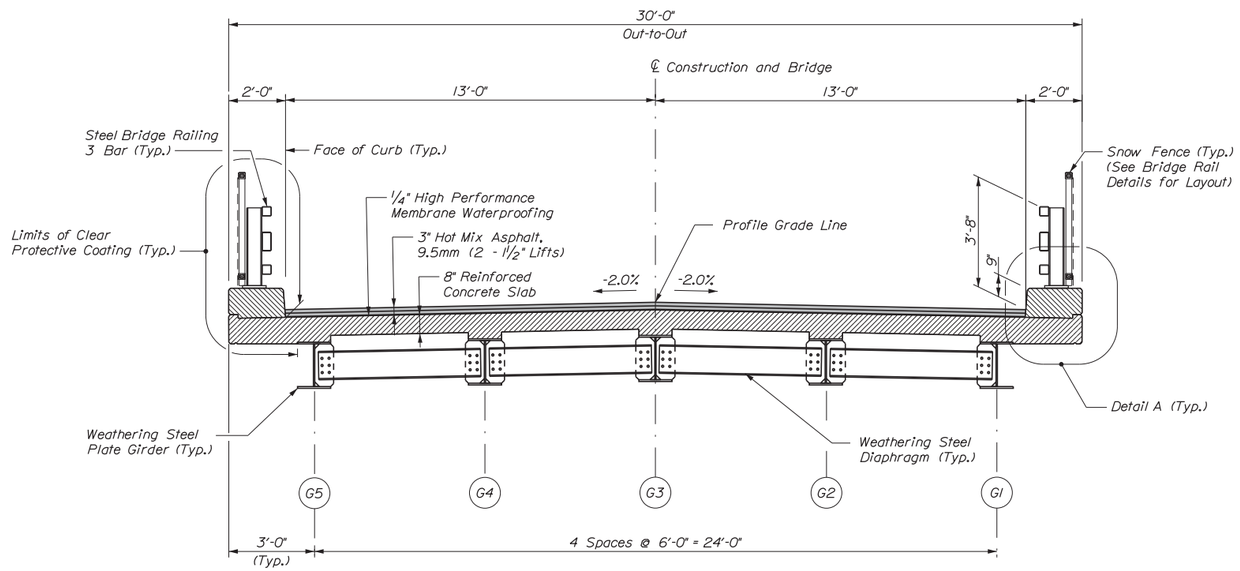

PROPOSED SUPERSTRUCTURE SECTION
(Looking Upstation)
Scale: 3/8" = 1'-0"

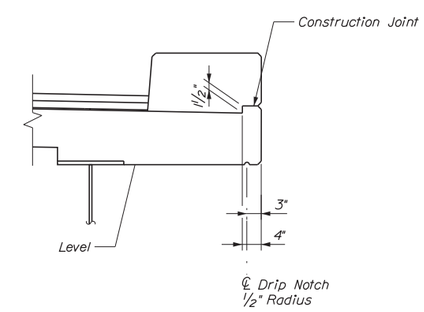

DETAIL A
Scale: 3/4" = 1'-0"

SUPERSTRUCTURE NOTES

1. All bridge curb concrete, including inside faces, top and outside faces, approach curb and deck fascia shall have a rubbed finish prior to the application of the Clear Protective Coating for Concrete Surface.
2. The concrete deck shall be given a smooth ordinary finish.
3. Prior to installing the proposed shear studs the Contractor shall clean the girder top flange so that it is free of debris, rust, scale, oil and other contaminates that would adversely affect the welding operation. All the grinding shall be performed in the longitudinal direction of the beam. Payment for preparing girder top flange for installation of proposed shear studs shall be incidental to Item 505.09.
4. Protective shielding shall be required per Special Provision Section 524.
5. The theoretical blocking used for design of the structure is 3 1/2" at the centerline of bearing at the abutments and piers.
6. Reinforcing steel shall have a minimum concrete cover of 2 inches unless otherwise noted.
7. Form a one inch V-groove on the fascias at the horizontal joint between the curb and slab.
8. The superstructure slab concrete shall be placed in one continuous operation and the concrete shall be kept plastic one complete span behind the span being placed.
9. At the Contractor's option, Precast Deck Panels may be used in place of the full depth cast-in-place deck slab, in accordance with Special Provisions Section 535. See details on Miscellaneous Details sheet.
10. See Framing Plan and Girder Elevation sheet for Structural Steel notes.
11. Install 1" diameter PVC deck drains per Standard Detail 502(04) and Special Provision Section 502.17 as required and as directed by the Resident. Drains shall extend 1'-0" below bottom flange.

1 0 3
3/4" = 1'-0"
1 0 7
3/8" = 1'-0"

Date:12/31/2015

Filename: ...\planset\043_Bridge_Typ_01.dgn

Scale:

No.	Revision	By	Date

Designed by: vhb

CONSULTANT PROJECT MANAGER: T. Bryant

	By	Date		By	Date
Designed	MED	12/2015	Checked	GME	12/2015
Drawn	CMD	12/2015	In Charge of	TSB	12/2015

VANASSE HANGEN BRUSTLIN, INC.
500 Southborough Dr.
Suite 105B
South Portland, ME 04106
TEL (207) 889-3150
FAX (207) 253-5596

MAINE TURNPIKE

THE GOLD STAR MEMORIAL HIGHWAY

MTA PROJECT MANAGER: Ralph Norwood, IV

SUPERSTRUCTURE REPLACEMENT
MAPLE STREET UNDERPASS

TYPICAL SUPERSTRUCTURE SECTIONS AND DETAILS

VHB: 55068.00
CONTRACT: 2016.04

SHEET NUMBER: 43

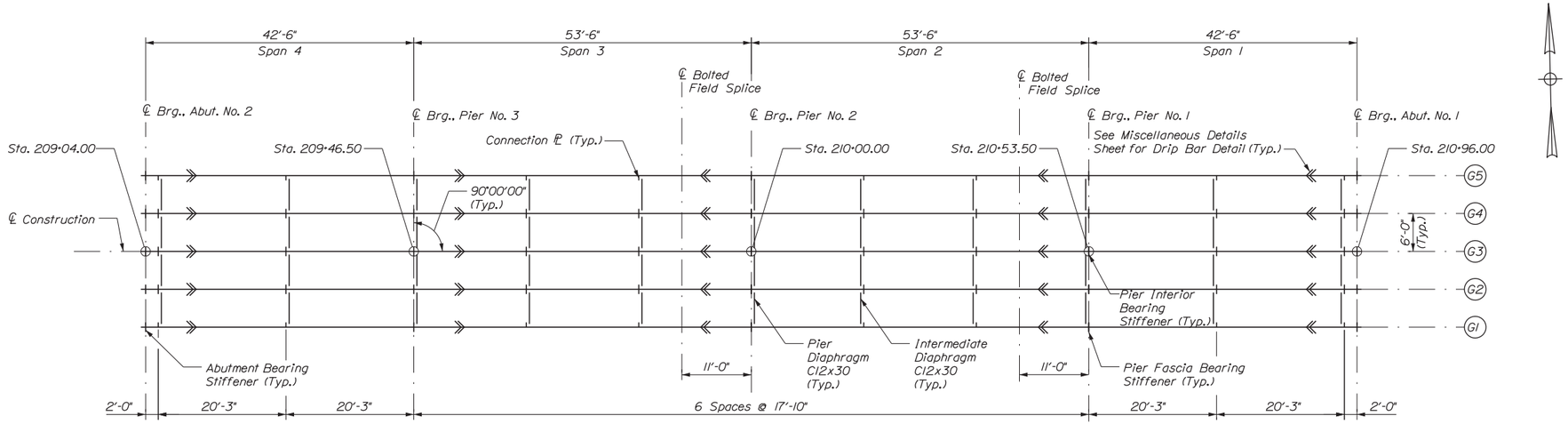

FRAMING PLAN

Scale: 3/32" = 1'-0"

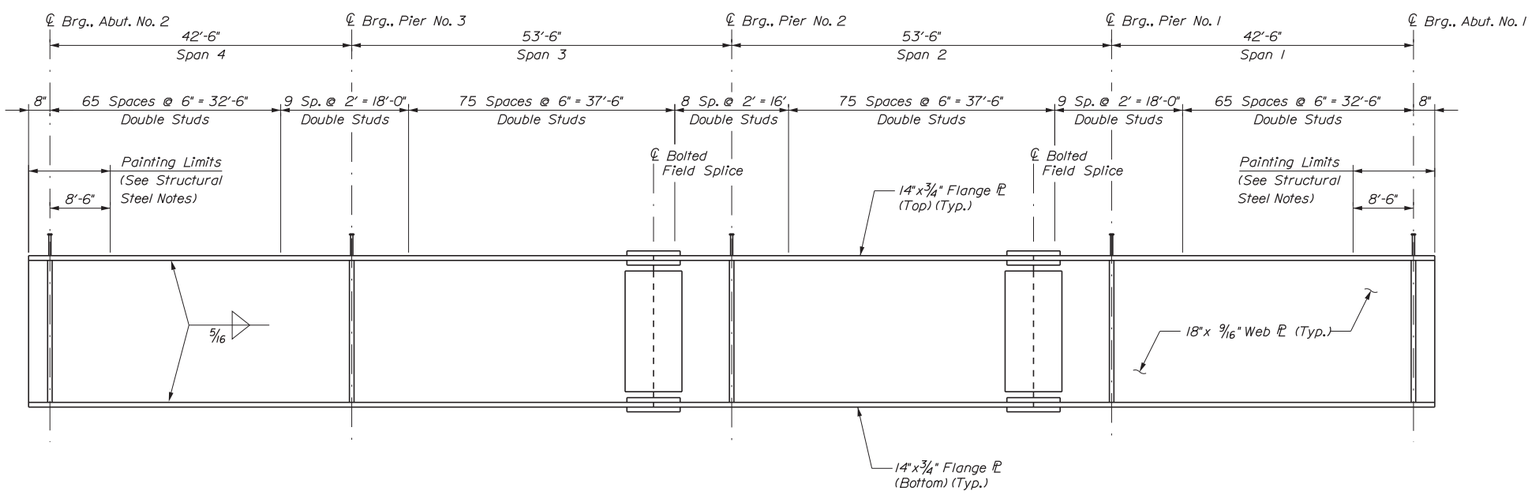

GIRDER ELEVATION AND STUD LAYOUT

(Connection Plates and Drip Bars not Shown)
614 Shear Studs per Girder
(3070 Shear Studs Total)
Not to Scale

STRUCTURAL STEEL NOTES

1. No transverse butt weld splices will be allowed in the flange plates or web plates within 10 feet or 10 percent of the span length (whichever is greater) from the points of maximum negative moment or maximum positive moment. Butt weld splices in flanges shall be not less than 18 inches from transverse butt welds in the web plates and no transverse web or flange butt welds shall be located within 18 inches of other transverse welds (e.g. connection plates to web welds) on either flange or web. No transverse butt weld splices will be allowed in areas of stress reversal.
2. Bearing stiffeners and girder ends shall be plumb after erection and dead loading of the structure. Intermediate web stiffeners may be either plumb or normal to the top flange. Girder webs may be plumb in the no-load condition or full dead load condition for erection purposes.
3. Diaphragm connection plates may be either plumb or normal to the top flange.
4. All bolts shall be 7/8" diameter ASTM A325 Type 3 high strength bolts. Holes shall be 15/16" unless otherwise noted. Bolts shall be installed with heads down at all bottom flange connections and heads up at all top flange connections. In painted areas, bolts shall be Type 1 galvanized.
5. Shear studs shall extend a minimum of 2" into the slab. See Shear Connector Detail on Miscellaneous Details Sheet.
6. Prior to erection of structural steel the Contractor shall submit a detailed erection plan for approval.
7. Bearing stiffeners shall be mill-to-bear on the bottom flange and tight fit to the top flange. Bearing stiffeners used as connection plates shall be detailed as connection plates.
8. All faying surfaces, with the exception of field splices, shall be painted or sealed in accordance with FHWA Technical Advisory T5140.22, Section 4.c.2.c to prevent the formation of pack rust.
9. All plan dimensions provided are horizontal at 45 degrees F without accounting for profile grade, unless otherwise noted.
10. Bolted field splice locations may be mirrored at centerline bearing Pier No. 2.
11. Bearing anchor rods shall be placed prior to installing girder end diaphragms.
12. All structural steel, including connection plates, diaphragms, bearing load plates, sole plates, and curtain wall blockout plates shall be painted within 8'-6" of the center line of bearing at both abutments. All new painted surfaces where the existing protective coating has been removed or damaged due to construction activities shall be touched-up with an approved paint system recommended by the manufacturer of the paint system being repaired, as noted in Special Provision Section 506.

Scale: 2 0 14 30
3/32" = 1'-0"

No.	Revision	By	Date

Designed by: vhb

CONSULTANT PROJECT MANAGER: T. Bryant

	By	Date		By	Date
Designed	MED	12/2015	Checked	GME	12/2015
Drawn	CMD	12/2015	In Charge of	TSB	12/2015

VANASSE HANGEN BRUSTLIN, INC.
500 Southborough Dr.
Suite 105B
South Portland, ME 04106
TEL (207) 889-3150
FAX (207) 253-5596

MAINE TURNPIKE

THE GOLD STAR MEMORIAL HIGHWAY

MTA PROJECT MANAGER: Ralph Norwood, IV

SUPERSTRUCTURE REPLACEMENT
MAPLE STREET UNDERPASS

FRAMING PLAN
AND GIRDER ELEVATION

VHB: 55068.00
CONTRACT: 2016.04

SHEET NUMBER: 44
44 OF 70

Date: 12/31/2015

Filename: ...\st\planset\044_Framing_01.dgn

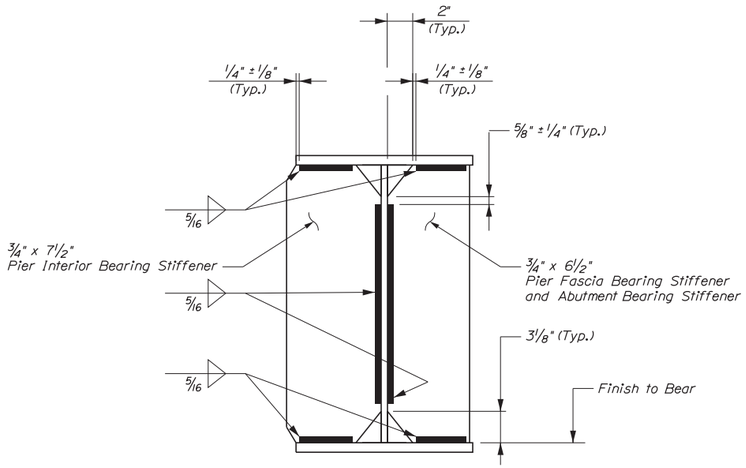

BEARING STIFFENER
Not to Scale

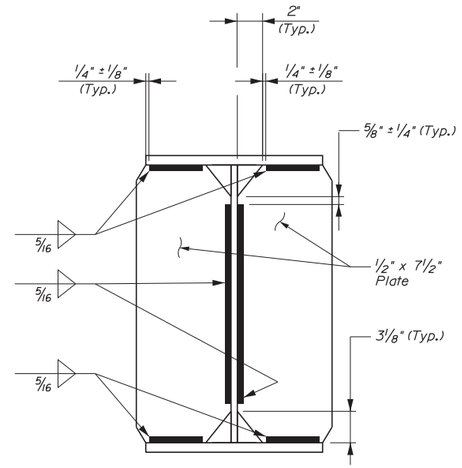

CONNECTION PLATE
(Interior Girder Shown)
Not to Scale

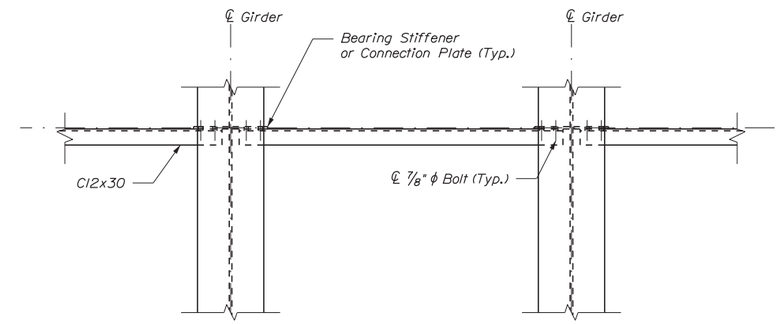

PLAN

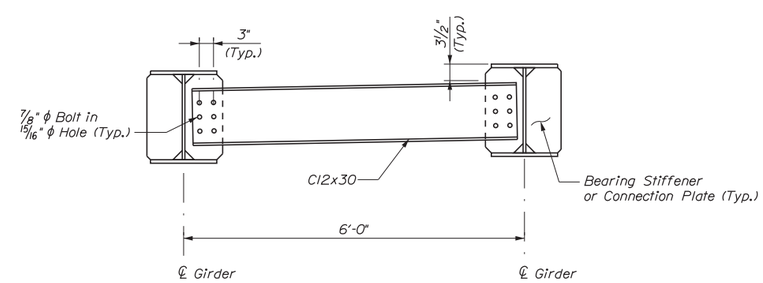

ELEVATION

PIER AND INTERMEDIATE DIAPHRAGM
(Typical all Bays)
Not to Scale

Date:12/31/2015

Filename: ...\planset\045_diaphragm_01.dgn

Scale: As Noted

No.	Revision	By	Date

Designed by: vhb

CONSULTANT PROJECT MANAGER: T. Bryant

	By	Date		By	Date
Designed	MED	12/2015	Checked	GME	12/2015
Drawn	CLC	12/2015	In Charge of	TSB	12/2015

VANASSE HANGEN BRUSTLIN, INC.
500 Southborough Dr.
Suite 105B
South Portland, ME 04106
TEL (207) 889-3150
FAX (207) 253-5596

MAINE TURNPIKE

THE GOLD STAR MEMORIAL HIGHWAY

MTA PROJECT MANAGER: Ralph Norwood, IV

SUPERSTRUCTURE REPLACEMENT
MAPLE STREET UNDERPASS

DIAPHRAGM DETAILS

VHB: 55068.00
CONTRACT: 2016.04

SHEET NUMBER: 45

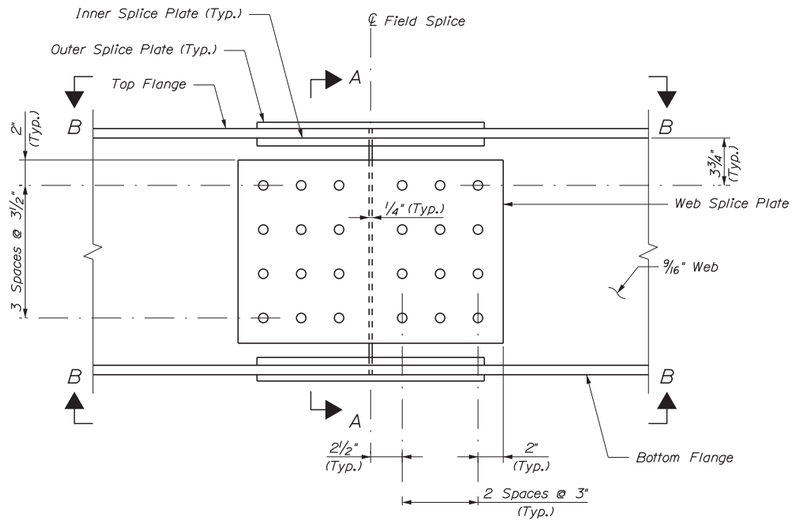

BOLTED FIELD SPLICE ELEVATION
Scale: 2" = 1'-0"

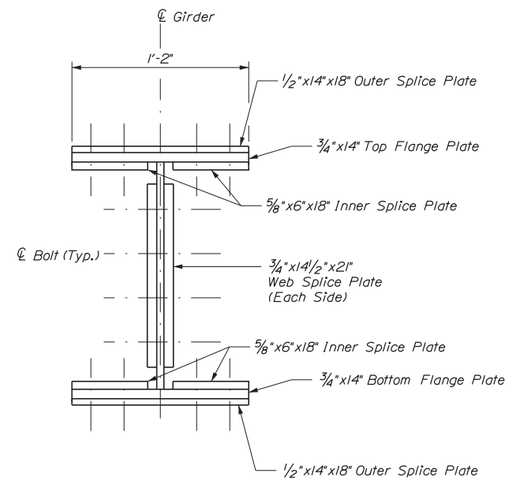

SECTION A-A
Scale: 2" = 1'-0"

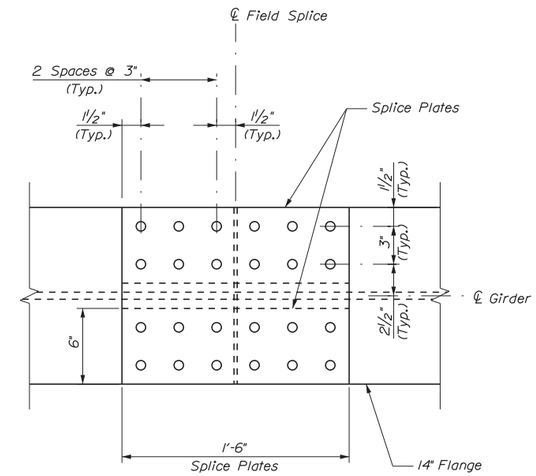

VIEW B-B
Scale: 2" = 1'-0"

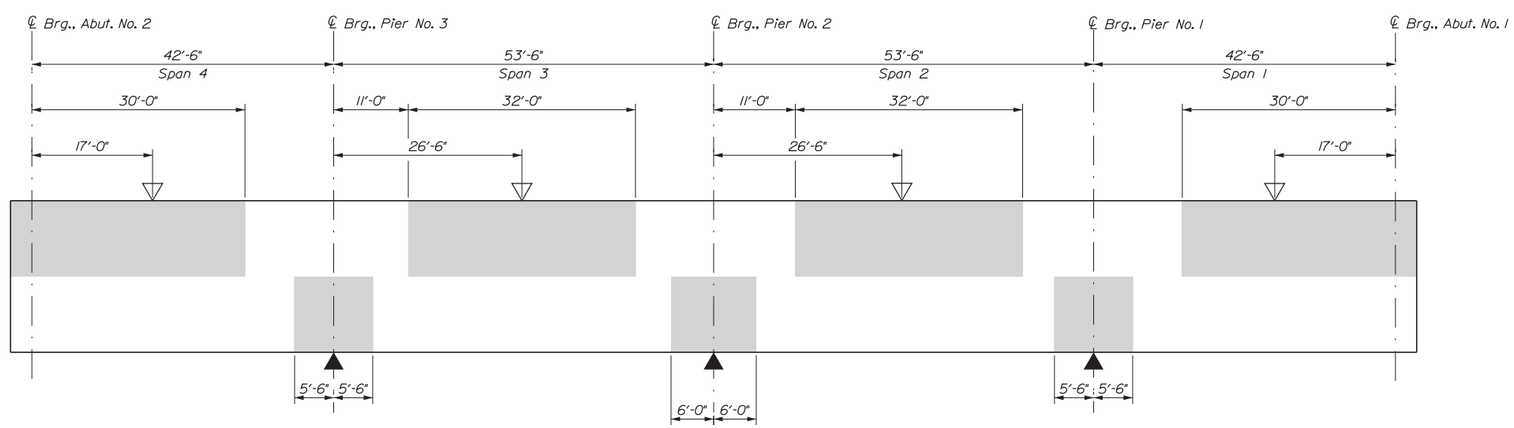

SCHEMATIC
GIRDER STRESS DIAGRAM
Not to Scale

KEY:

Indicates Areas Always in Compression. All Other Areas are in Tension or have Stress Reversals.

▽ Point of Maximum Positive Moment

▲ Point of Maximum Negative Moment

1 0.5 0 0.5
2" = 1'-0"

Scale: AS NOTED

No.	Revision	By	Date

Designed by: vhb

CONSULTANT PROJECT MANAGER: T. Bryant

	By	Date		By	Date
Designed	MED	12/2015	Checked	GME	12/2015
Drawn	CLC	12/2015	In Charge of	TSB	12/2015

VANASSE HANGEN BRUSTLIN, INC.
500 Southborough Dr.
Suite 105B
South Portland, ME 04106
TEL (207) 889-3150
FAX (207) 253-5596

MAINE TURNPIKE

THE GOLD STAR MEMORIAL HIGHWAY

MTA PROJECT MANAGER: Ralph Norwood, IV

SUPERSTRUCTURE REPLACEMENT
MAPLE STREET UNDERPASS

FIELD SPLICE AND STRESS DIAGRAM

VHB: 55068.00
CONTRACT: 2016.04

SHEET NUMBER: 46

Date: 12/31/2015
Filename: ...\cad\st\planset\046_beam_01.dgn

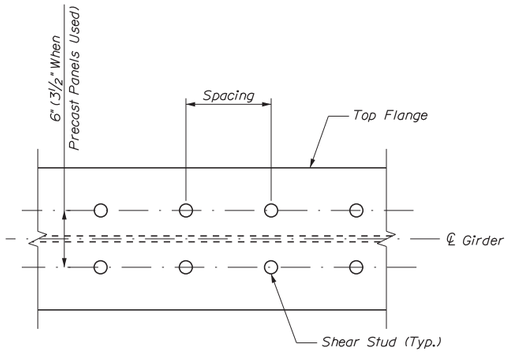

SHEAR CONNECTOR LAYOUT

(Adjust Shear Connector Spacing as Required Around Splice Plate Bolts)
Not to Scale

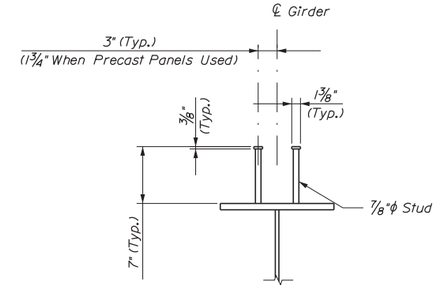

SHEAR CONNECTOR DETAIL

Not to Scale

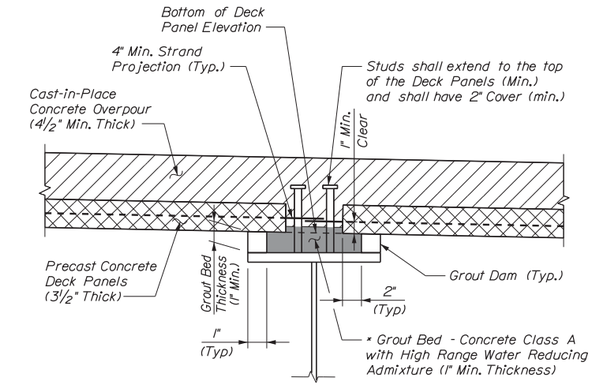

* Ensure Grout Flows Under Panel for Complete Bearing

PRECAST PANEL HAUNCH DETAIL

(Pavement Not Shown)
Not to Scale

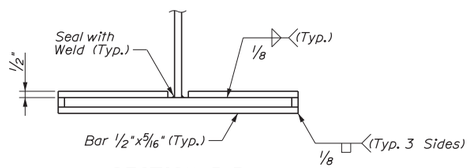

SECTION B-B

Not to Scale

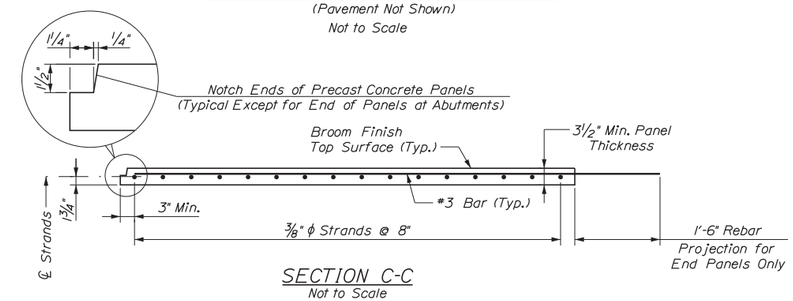

SECTION C-C

Not to Scale

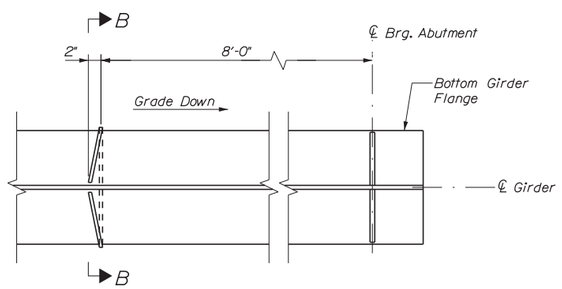

FLANGE DRIP BAR DETAIL

(Abutment Location Shown, Pier Location Similar)
Not to Scale

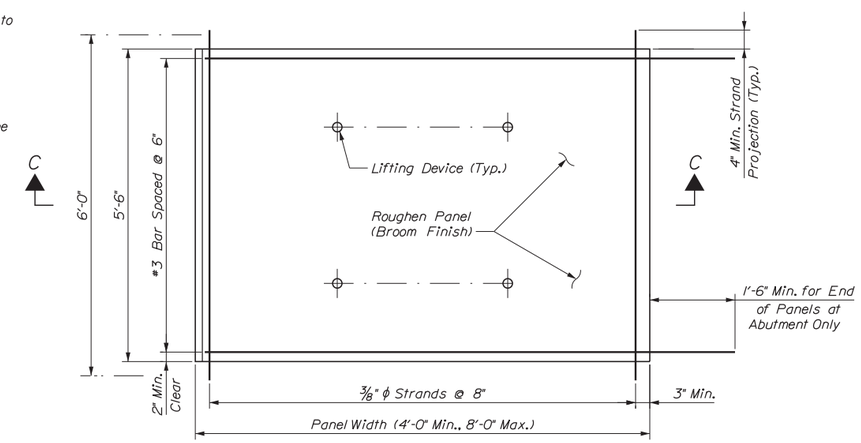

PRECAST DECK PANEL DETAIL

Not to Scale

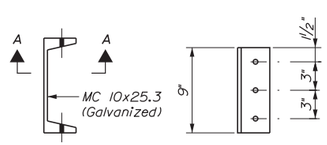

SIGN SUPPORT (4 Required) | SECTION A-A

SIGN SUPPORT DETAILS

Scale: 1½" = 1'-0"

PRECAST CONCRETE DECK PANEL NOTES

1. Precast Concrete Deck Panels shall be fabricated in accordance with Section 535 of the Standard Specifications.
2. The contractor shall submit working drawings showing the exact layout of panel types and sizes.
3. Concrete for panels shall have a minimum 28 day compressive strength of 6,000 psi and a minimum release strength of 4,000 psi.
4. Prestressing strands shall be 3/8 in. diameter, Grade 270 seven wire low-relaxation type, conforming to the requirements of ASTM A416. All strands shall be pulled to have a net tension of 17.2 kips per strand after allowing for chuck slippage.
5. The top surface of the deck panels shall be broomed to a surface roughness of 0.06 in. Broom the surface parallel to the strand.
6. If high density expanded polystyrene foam is used as a temporary support, it shall be cut in the field to the required height and affixed to the girders with an approved high strength adhesive.
7. Panel lifting locations shown are advisory only. Actual lifting locations shall be determined by the Fabricator and indicated on the shop drawings.
8. Mortar to be used for support under the deck panels shall have an approved high range water reducing additive.
9. Corrosion inhibitor (calcium nitrite) admixture shall be used.
10. If leveling screws are used, they shall be completely removed after the grouting operations and prior to deck placement. Holes left by leveling screws shall be filled with an approved grout prior to deck placement.
11. Temporary bracing between ends of panels shall be supplied as required to prevent panel movement transverse to the girders.
12. The specific reinforcing steel layout for the cast-in-place portions of the slab shall be as shown on the Deck Reinforcement Sheets.
13. Reinforcing in panels shall be black bar except for end panels at abutments which shall have epoxy coated rebar.
14. For additional details, see Standard Details 502(07) - 502(12).

SIGN SUPPORT NOTES

1. One street sign shall be placed on each bridge fascia. Location of Street Sign Support shall be field determined by the Resident.
2. Bolts shall be ½" diameter A325 Type I galvanized.
3. Sign Brackets shall be located within two feet of sign ends. Bracket spacing shall be 5' on center maximum.
4. Street Signs shall be provided by the Authority.
5. Installation of the sign and supports will not be measured for payment and will be considered incidental to Item 504.71.

Date:12/31/2015

Filename: ...\cad\st\planset\047_beam_02.dgn

Scale: 1 0 1 — 1½" = 1'-0"

No.	Revision	By	Date

Designed by: vhb

CONSULTANT PROJECT MANAGER: T. Bryant

	By	Date		By	Date
Designed	MED	12/2015	Checked	GME	12/2015
Drawn	CLC	12/2015	In Charge of	TSB	12/2015

VANASSE HANGEN BRUSTLIN, INC.
500 Southborough Dr.
Suite 105B
South Portland, ME 04106
TEL (207) 889-3150
FAX (207) 253-5596

MAINE TURNPIKE

THE GOLD STAR MEMORIAL HIGHWAY

MTA PROJECT MANAGER: Ralph Norwood, IV

SUPERSTRUCTURE REPLACEMENT
MAPLE STREET UNDERPASS

MISCELLANEOUS DETAILS

VHB: 55068.00 | SHEET NUMBER: 47
CONTRACT: 2016.04 | 47 OF 70

TABLE OF DEFLECTIONS (in)

Girder	Load	Span No. 4										
		10/10	9/10	8/10	7/10	6/10	5/10	4/10	3/10	2/10	1/10	0/10
All Girders	Steel Dead Load	0.00	-0.02	-0.04	-0.05	-0.06	-0.05	-0.04	-0.03	-0.02	0	0.00
	Fluid Dead Load	0.00	-0.12	-0.22	-0.28	-0.31	-0.3	-0.25	-0.18	-0.09	-0.03	0.00
	Superimposed Dead Load	0.00	-0.03	-0.06	-0.08	-0.09	-0.09	-0.08	-0.06	-0.03	-0.01	0.00
	Sum	0.00	-0.17	-0.32	-0.41	-0.46	-0.44	-0.37	-0.26	-0.14	-0.04	0.00
Girder	Load	Span No. 3										
		10/10	9/10	8/10	7/10	6/10	5/10	4/10	3/10	2/10	1/10	0/10
All Girders	Steel Dead Load	0.00	-0.01	-0.03	-0.05	-0.07	-0.07	-0.07	-0.05	-0.03	-0.01	0.00
	Fluid Dead Load	0.00	-0.06	-0.17	-0.29	-0.37	-0.40	-0.37	-0.28	-0.16	-0.05	0.00
	Superimposed Dead Load	0.00	-0.03	-0.07	-0.11	-0.14	-0.15	-0.14	-0.11	-0.07	-0.02	0.00
	Sum	0.00	-0.10	-0.28	-0.45	-0.58	-0.62	-0.57	-0.44	-0.26	-0.08	0.00
Girder	Load	Span No. 2										
		10/10	9/10	8/10	7/10	6/10	5/10	4/10	3/10	2/10	1/10	0/10
All Girders	Steel Dead Load	0.00	-0.01	-0.03	-0.05	-0.07	-0.07	-0.07	-0.05	-0.03	-0.01	0.00
	Fluid Dead Load	0.00	-0.05	-0.16	-0.28	-0.37	-0.40	-0.37	-0.29	-0.17	-0.06	0.00
	Superimposed Dead Load	0.00	-0.02	-0.07	-0.11	-0.14	-0.15	-0.14	-0.11	-0.07	-0.03	0.00
	Sum	0.00	-0.08	-0.26	-0.44	-0.57	-0.62	-0.58	-0.45	-0.28	-0.10	0.00
Girder	Load	Span No. 1										
		10/10	9/10	8/10	7/10	6/10	5/10	4/10	3/10	2/10	1/10	0/10
All Girders	Steel Dead Load	0.00	0.00	-0.02	-0.03	-0.04	-0.05	-0.06	-0.05	-0.04	-0.02	0.00
	Fluid Dead Load	0.00	-0.03	-0.09	-0.18	-0.25	-0.30	-0.31	-0.28	-0.22	-0.12	0.00
	Superimposed Dead Load	0.00	-0.01	-0.03	-0.06	-0.08	-0.09	-0.09	-0.08	-0.06	-0.03	0.00
	Sum	0.00	-0.04	-0.14	-0.26	-0.37	-0.44	-0.46	-0.41	-0.32	-0.17	0.00

BOTTOM OF SLAB ELEVATIONS @ 10TH POINTS

Girder	℄ Brg., Abut. No. 2	4.90	4.80	4.70	4.60	4.50	4.40	4.30	4.20	4.10	℄ Brg., Pier No. 3
Span No. 4											
1	271.50	271.58	271.65	271.72	271.78	271.83	271.88	271.91	271.95	271.98	272.02
2	271.62	271.70	271.77	271.84	271.89	271.95	271.99	272.03	272.07	272.10	272.14
3	271.74	271.82	271.89	271.96	272.01	272.07	272.11	272.15	272.19	272.22	272.26
4	271.62	271.70	271.77	271.84	271.89	271.95	271.99	272.03	272.07	272.10	272.14
5	271.50	271.58	271.65	271.72	271.78	271.83	271.88	271.91	271.95	271.98	272.02
Span No. 3											
Girder	℄ Brg., Pier No. 3	3.90	3.80	3.70	3.60	3.50	3.40	3.30	3.20	3.10	℄ Brg., Pier No. 2
1	272.02	272.07	272.12	272.17	272.21	272.23	272.25	272.25	272.24	272.23	272.23
2	272.14	272.19	272.24	272.28	272.32	272.35	272.36	272.37	272.36	272.35	272.35
3	272.26	272.31	272.36	272.40	272.44	272.47	272.48	272.49	272.48	272.47	272.47
4	272.14	272.19	272.24	272.28	272.32	272.35	272.36	272.37	272.36	272.35	272.35
5	272.02	272.07	272.12	272.17	272.21	272.23	272.25	272.25	272.24	272.23	272.23
Span No. 2											
Girder	℄ Brg., Pier No. 2	2.90	2.80	2.70	2.60	2.50	2.40	2.30	2.20	2.10	℄ Brg., Pier No. 1
1	272.23	272.23	272.23	272.23	272.22	272.20	272.16	272.12	272.06	272.00	271.94
2	272.35	272.35	272.35	272.35	272.33	272.31	272.28	272.23	272.18	272.12	272.06
3	272.47	272.47	272.47	272.47	272.45	272.43	272.40	272.35	272.30	272.24	272.18
4	272.35	272.35	272.35	272.35	272.33	272.31	272.28	272.23	272.18	272.12	272.06
5	272.23	272.23	272.23	272.23	272.22	272.20	272.16	272.12	272.06	272.00	271.94
Span No. 1											
Girder	℄ Brg., Pier No. 1	1.90	1.80	1.70	1.60	1.50	1.40	1.30	1.20	1.10	℄ Brg., Abut. No. 1
1	271.94	271.90	271.86	271.82	271.78	271.73	271.67	271.61	271.53	271.45	271.37
2	272.06	272.02	271.98	271.94	271.90	271.85	271.79	271.72	271.65	271.57	271.49
3	272.18	272.14	272.10	272.06	272.02	271.97	271.91	271.84	271.77	271.69	271.61
4	272.06	272.02	271.98	271.94	271.90	271.85	271.79	271.72	271.65	271.57	271.49
5	271.94	271.90	271.86	271.82	271.78	271.73	271.67	271.61	271.53	271.45	271.37

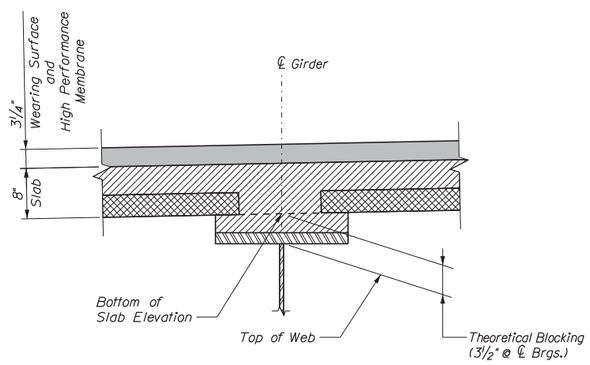

BLOCKING DETAIL
Not to Scale
(Deck Panel Option Shown)

Date:12/31/2015

Filename: ...\st\planset\048_table_01.dgn

Scale: AS NOTED

No.	Revision	By	Date

Designed by: vhb

CONSULTANT PROJECT MANAGER: T. Bryant

	By	Date		By	Date
Designed	MED	12/2015	Checked	GME	12/2015
Drawn	CLC	12/2015	In Charge of	TSB	12/2015

VANASSE HANGEN BRUSTLIN, INC.
500 Southborough Dr.
Suite 105B
South Portland, ME 04106
TEL (207) 889-3150
FAX (207) 253-5596

MAINE TURNPIKE

THE GOLD STAR MEMORIAL HIGHWAY

MTA PROJECT MANAGER: Ralph Norwood, IV

SUPERSTRUCTURE REPLACEMENT
MAPLE STREET UNDERPASS

TABLE OF DEFLECTIONS
AND BOTTOM OF SLAB ELEVATIONS

VHB: 55068.00 SHEET NUMBER: 48
CONTRACT: 2016.04

TABLE OF CAMBER ORDINATES PER SPAN ("COS") (in) @ 10TH POINTS

Girder	℄ Brg., Abut. No. 2	4.90	4.80	4.70	4.60	4.50	4.40	4.30	4.20	4.10	℄ Brg., Pier No. 3
Span No. 4											
1	0.00	0.36	0.65	0.85	0.96	0.96	0.86	0.69	0.46	0.21	0.00
2	0.00	0.34	0.61	0.81	0.90	0.91	0.82	0.66	0.44	0.21	0.00
3	0.00	0.34	0.61	0.81	0.90	0.91	0.82	0.66	0.44	0.21	0.00
4	0.00	0.34	0.61	0.81	0.90	0.91	0.82	0.66	0.44	0.21	0.00
5	0.00	0.36	0.65	0.85	0.96	0.96	0.86	0.69	0.46	0.21	0.00
Span No. 3											
Girder	℄ Brg., Pier No. 3	3.90	3.80	3.70	3.60	3.50	3.40	3.30	3.20	3.10	℄ Brg., Pier No. 2
1	0.00	0.37	0.78	1.12	1.35	1.43	1.34	1.11	0.76	0.36	0.00
2	0.00	0.36	0.75	1.07	1.29	1.36	1.28	1.06	0.73	0.35	0.00
3	0.00	0.36	0.75	1.07	1.29	1.36	1.28	1.06	0.73	0.35	0.00
4	0.00	0.36	0.75	1.07	1.29	1.36	1.28	1.06	0.73	0.35	0.00
5	0.00	0.37	0.78	1.12	1.35	1.43	1.34	1.11	0.76	0.36	0.00
Span No. 2											
Girder	℄ Brg., Pier No. 2	2.90	2.80	2.70	2.60	2.50	2.40	2.30	2.20	2.10	℄ Brg., Pier No. 1
1	0.00	0.36	0.76	1.11	1.34	1.43	1.35	1.12	0.78	0.37	0.00
2	0.00	0.35	0.73	1.06	1.28	1.36	1.29	1.07	0.75	0.36	0.00
3	0.00	0.35	0.73	1.06	1.28	1.36	1.29	1.07	0.75	0.36	0.00
4	0.00	0.35	0.73	1.06	1.28	1.36	1.29	1.07	0.75	0.36	0.00
5	0.00	0.36	0.76	1.11	1.34	1.43	1.35	1.12	0.78	0.37	0.00
Span No. 1											
Girder	℄ Brg., Pier No. 1	1.90	1.80	1.70	1.60	1.50	1.40	1.30	1.20	1.10	℄ Brg., Abut. No. 1
1	0.00	0.21	0.46	0.69	0.86	0.96	0.96	0.85	0.65	0.36	0.00
2	0.00	0.21	0.44	0.66	0.82	0.91	0.90	0.81	0.61	0.34	0.00
3	0.00	0.21	0.44	0.66	0.82	0.91	0.90	0.81	0.61	0.34	0.00
4	0.00	0.21	0.44	0.66	0.82	0.91	0.90	0.81	0.61	0.34	0.00
5	0.00	0.21	0.46	0.69	0.86	0.96	0.96	0.85	0.65	0.36	0.00

TABLE OF CAMBER DIMENSIONS (ft)

Girder	A2	P3	P2	P1	A1
1	0.13	0.65	0.86	0.58	0.00
2	0.13	0.65	0.86	0.58	0.00
3	0.13	0.65	0.86	0.58	0.00
4	0.13	0.65	0.86	0.58	0.00
5	0.13	0.65	0.86	0.58	0.00

CAMBER NOTES

1. Camber ordinates, as shown, are computed to compensate for all dead load deflections and for the curvature of the finished grade profile.
2. Dimensions shown do not account for shop fabrication temperature or girder extensions beyond bearing at abutments.

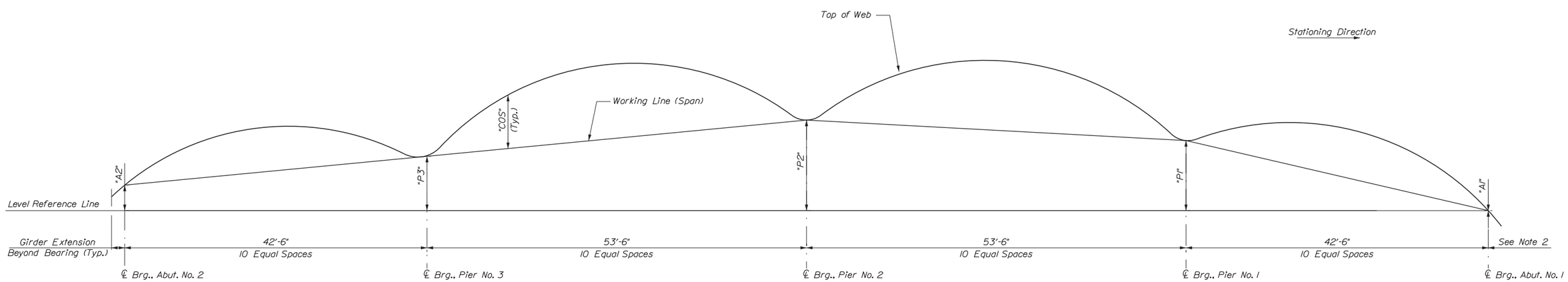

CAMBER DIAGRAM
Not to Scale

Date:12/31/2015

Filename: ...\st\planset\049_camber_01.dgn

Scale: AS NOTED

No.	Revision	By	Date

Designed by: vhb

CONSULTANT PROJECT MANAGER: T. Bryant

	By	Date		By	Date
Designed	MED	12/2015	Checked	GME	12/2015
Drawn	CLC	12/2015	In Charge of	TSB	12/2015

VANASSE HANGEN BRUSTLIN, INC.
500 Southborough Dr.
Suite 105B
South Portland, ME 04106
TEL (207) 889-3150
FAX (207) 253-5596

MAINE TURNPIKE

THE GOLD STAR MEMORIAL HIGHWAY

MTA PROJECT MANAGER: Ralph Norwood, IV

SUPERSTRUCTURE REPLACEMENT
MAPLE STREET UNDERPASS
CAMBER ORDINATES AND DIAGRAM

VHB: 55068.00 SHEET NUMBER: 49
CONTRACT: 2016.04

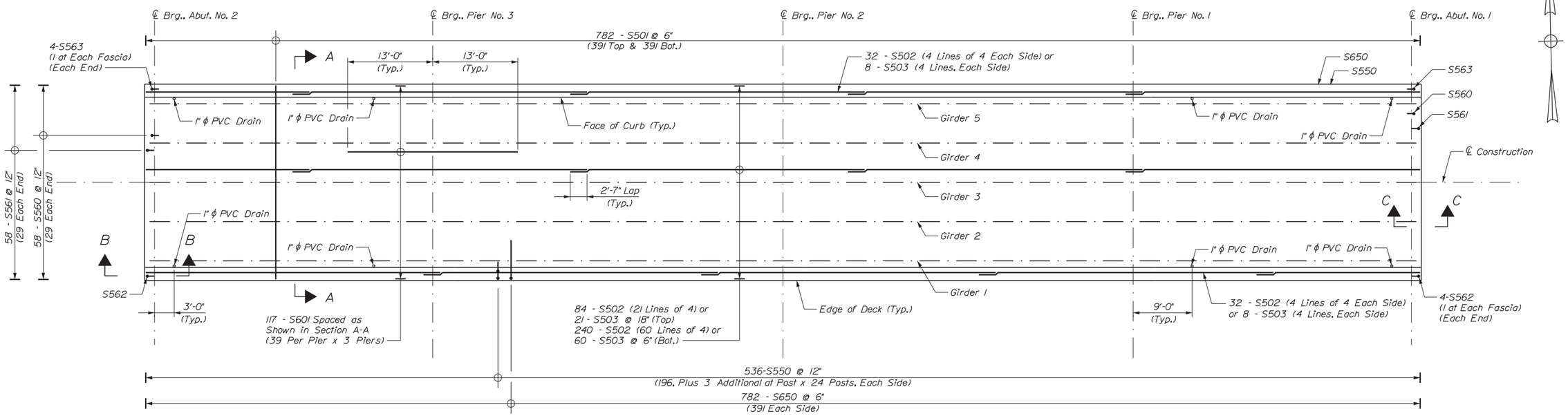

DECK REINFORCEMENT PLAN

(1" PVC Drains Enlarged for Clarity)
Scale: 1/8" = 1'-0"

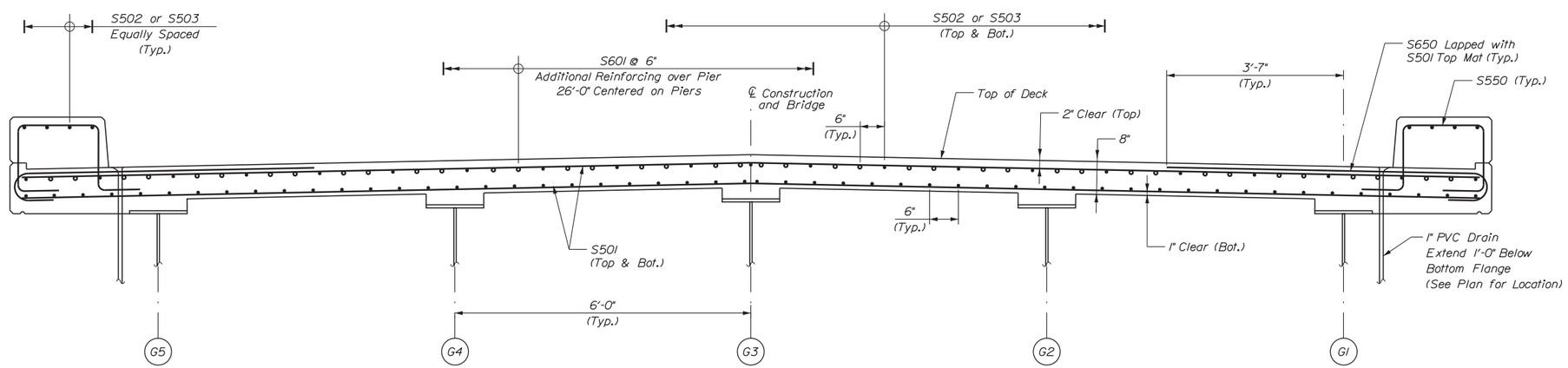

SECTION A-A

(Looking Up Station)
(Pavement not Shown)
Scale: 3/4" = 1'-0"

SHEET NOTES

1. See Deck Reinforcement (2 of 2) for Section B-B and Section C-C.
2. Alternate position of bars S502 and S503 such that longitudinal bar laps are staggered between adjacent lines of reinforcement.

REINFORCING KEY

N.F. = Near Face
F.F. = Far Face
E.F. = Each Face
▲ = Cut in Field

1 0 3
3/4" = 1'-0"
8 0 8 16
1/8" = 1'-0"

Scale: As Noted

No.	Revision	By	Date

Designed by: vhb

CONSULTANT PROJECT MANAGER: T. Bryant

	By	Date		By	Date
Designed	MED	12/2015	Checked	GME	12/2015
Drawn	BJM	12/2015	In Charge of	TSB	12/2015

VANASSE HANGEN BRUSTLIN, INC.
500 Southborough Dr.
Suite 105B
South Portland, ME 04106
TEL (207) 889-3150
FAX (207) 253-5596

MAINE TURNPIKE

THE GOLD STAR MEMORIAL HIGHWAY

MTA PROJECT MANAGER: Ralph Norwood, IV

SUPERSTRUCTURE REPLACEMENT
MAPLE STREET UNDERPASS

DECK REINFORCEMENT (1 OF 2)

VHB: 55068.00
CONTRACT: 2016.04

SHEET NUMBER: 50
50 OF 70

Date: 12/31/2015
Filename: ...\st\planset\050_DeckRein_01.dgn

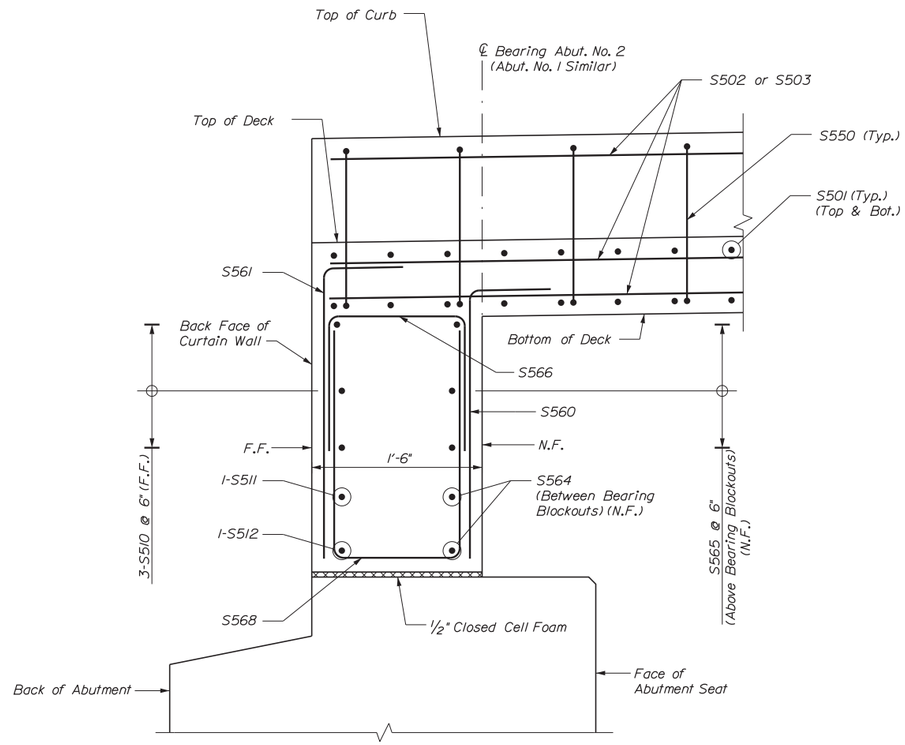

SECTION B-B
(Pavement not Shown)
Scale: 1 1/2" = 1'-0"

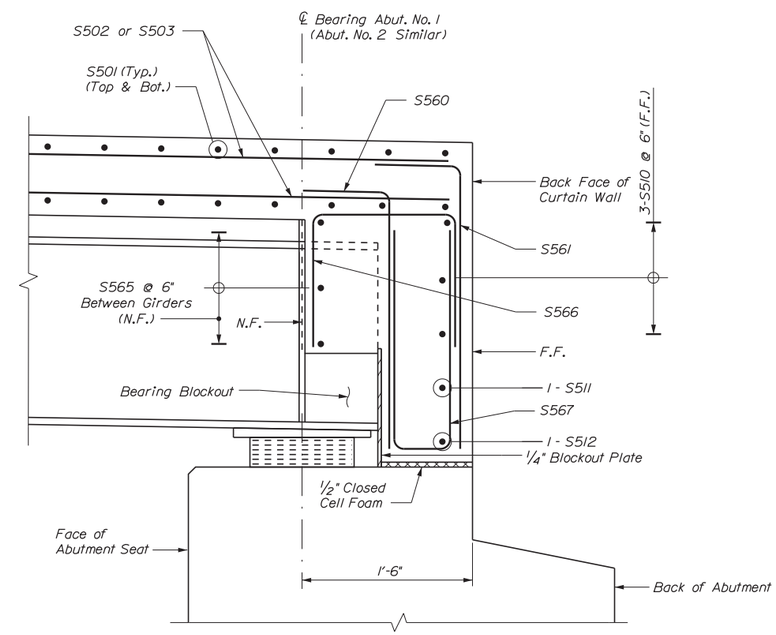

SECTION C-C
(Pavement not Shown)
Scale: 1 1/2" = 1'-0"

SHEET NOTE

1. See Deck Reinforcement (1 of 2) for location of Section B-B and Section C-C.

REINFORCING KEY

N.F. = Near Face
F.F. = Far Face
E.F. = Each Face
▲ = Cut in Field

Date:12/31/2015

Filename: ...\st\planset\051_DeckRein_02.dgn

Scale: 1 0 1
1 1/2" = 1'-0"

No.	Revision	By	Date

Designed by: vhb

CONSULTANT PROJECT MANAGER: T. Bryant

	By	Date		By	Date
Designed	MED	12/2015	Checked	GME	12/2015
Drawn	CLC	12/2015	In Charge of	TSB	12/2015

VANASSE HANGEN BRUSTLIN, INC.
500 Southborough Dr.
Suite 105B
South Portland, ME 04106
TEL (207) 889-3150
FAX (207) 253-5596

MAINE TURNPIKE

THE GOLD STAR MEMORIAL HIGHWAY

MTA PROJECT MANAGER: Ralph Norwood, IV

SUPERSTRUCTURE REPLACEMENT
MAPLE STREET UNDERPASS

DECK REINFORCEMENT (2 OF 2)

VHB: 55068.00
CONTRACT: 2016.04

SHEET NUMBER: 51

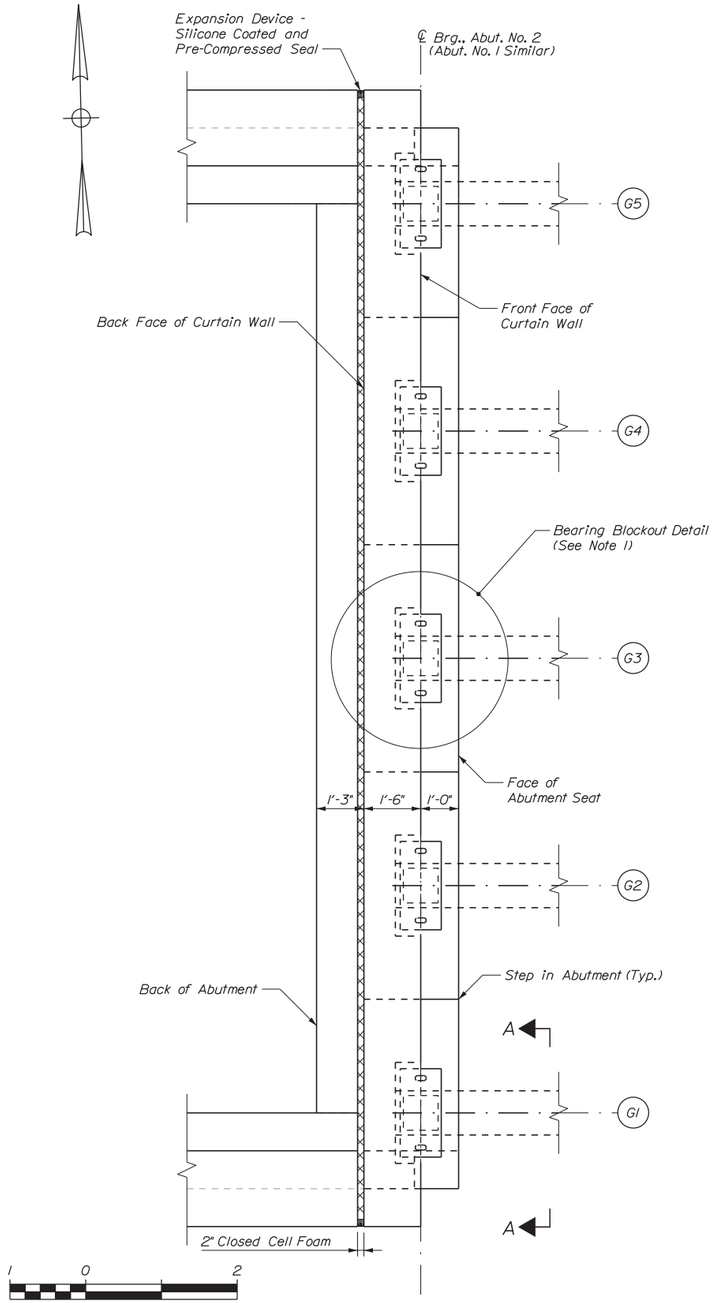

CURTAIN WALL LAYOUT

Scale: 1/2" = 1'-0"

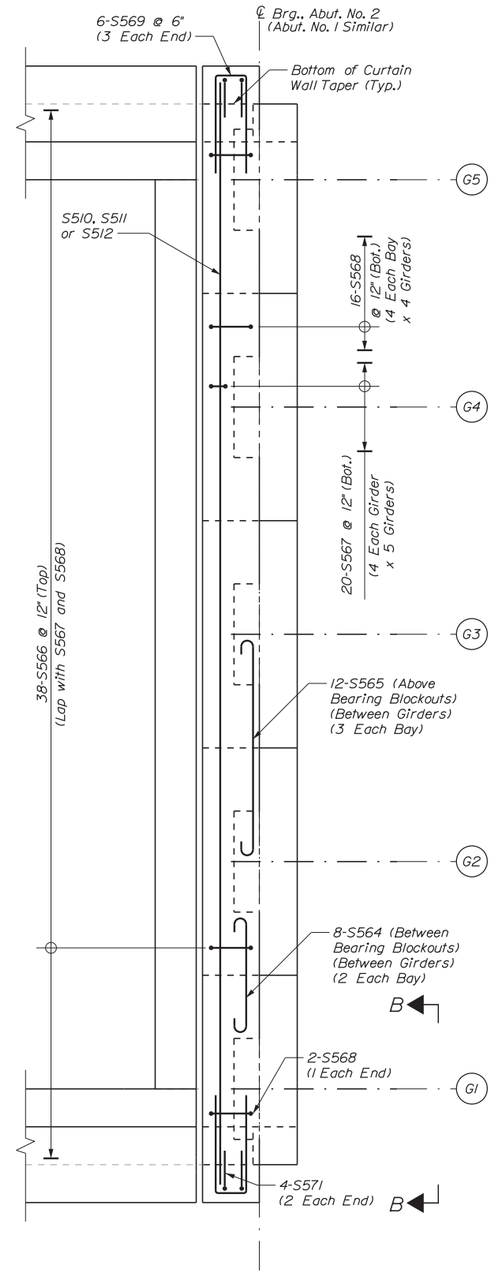

CURTAIN WALL REINFORCEMENT

Scale: 1/2" = 1'-0"

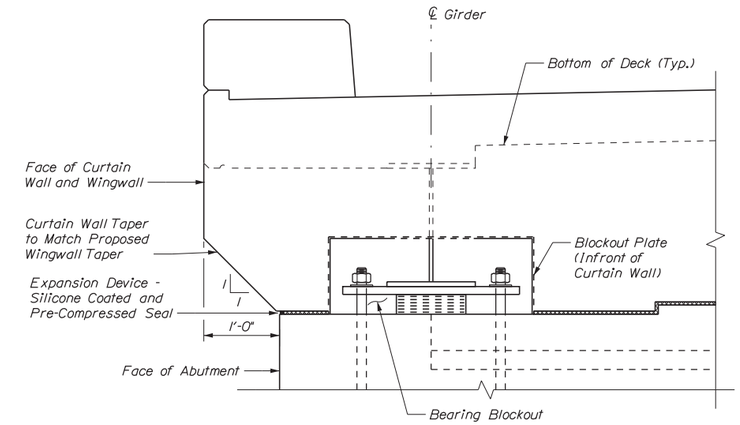

VIEW A-A

(Bearing Stiffener not Shown for Clarity)

Scale: 1" = 1'-0"

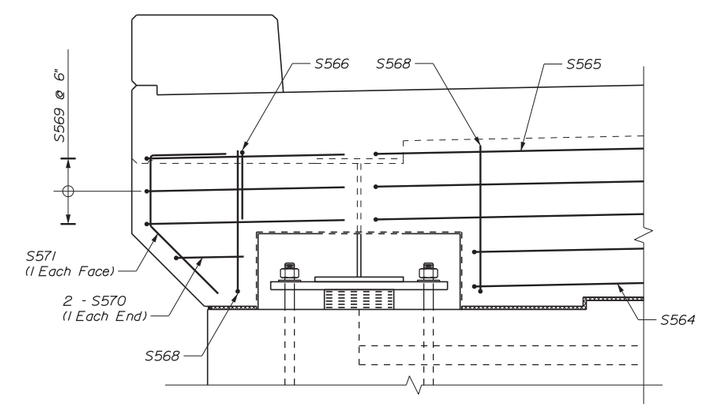

VIEW B-B

(Bearing Stiffener and F.F. Reinf. not Shown for Clarity)

Scale: 1" = 1'-0"

SHEET NOTE

1. See Curtain Wall Details (2 of 2) for Bearing Blockout Detail.

Date:12/31/2015

Filename: ...\st\planset\052_Curtain_01.dgn

Scale: AS NOTED

No.	Revision	By	Date

Designed by: vhb

CONSULTANT PROJECT MANAGER: T. Bryant

	By	Date		By	Date
Designed	MED	12/2015	Checked	GME	12/2015
Drawn	CLC	12/2015	In Charge of	TSB	12/2015

VANASSE HANGEN BRUSTLIN, INC.
500 Southborough Dr.
Suite 105B
South Portland, ME 04106
TEL (207) 889-3150
FAX (207) 253-5596

MAINE TURNPIKE

THE GOLD STAR MEMORIAL HIGHWAY

MTA PROJECT MANAGER: Ralph Norwood, IV

SUPERSTRUCTURE REPLACEMENT
MAPLE STREET UNDERPASS

CURTAIN WALL DETAILS (1 OF 2)

VHB: 55068.00

CONTRACT: 2016.04

SHEET NUMBER: 52

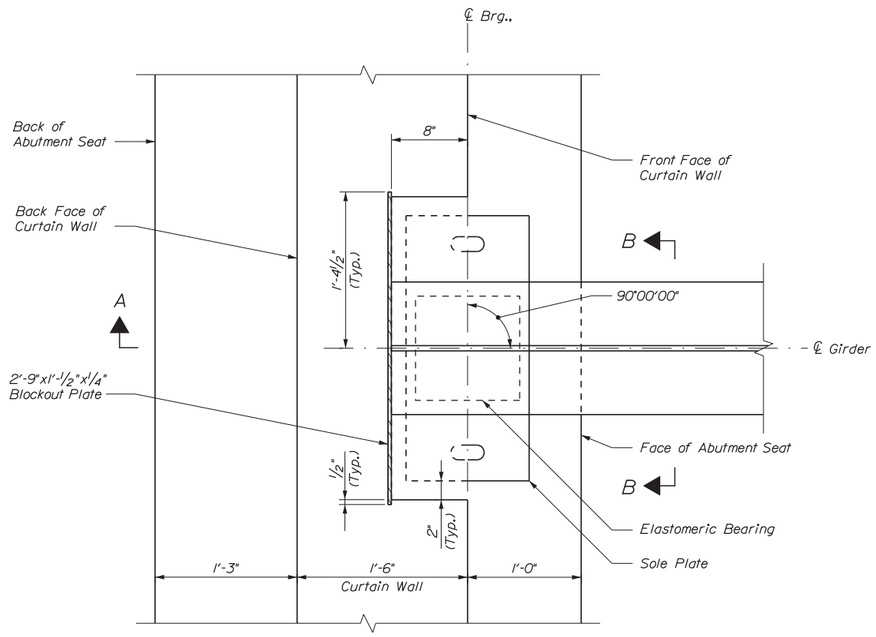

PLAN
(Anchor Bolts and Bearing Stiffeners Not Shown for Clarity)

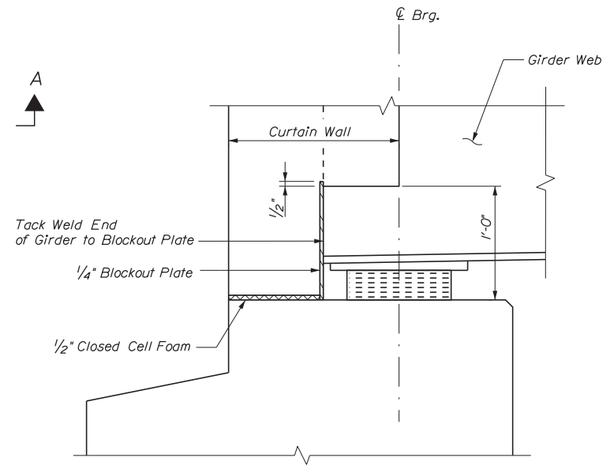

SECTION A-A

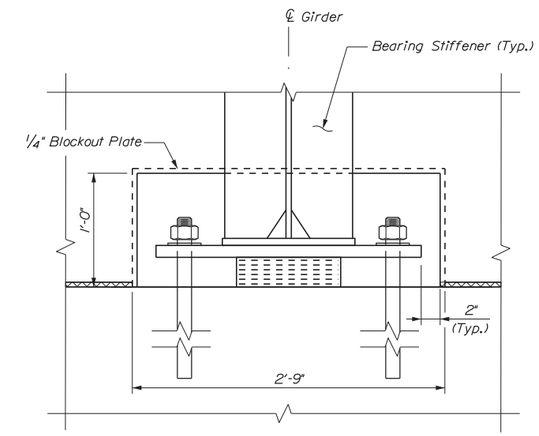

SECTION B-B

BEARING BLOCKOUT DETAILS
(Anchor Bolts and Bearing Stiffeners Not Shown for Clarity)
Scale: 1½" = 1'-0"

Date:12/31/2015

Filename: ...\st\planset\053_Curtain_02.dgn

Scale: 1 0 1
1½" = 1'-0"

No.	Revision	By	Date

Designed by: vhb

CONSULTANT PROJECT MANAGER: T. Bryant

	By	Date		By	Date
Designed	MED	12/2015	Checked	GME	12/2015
Drawn	CLC	12/2015	In Charge of	TSB	12/2015

VANASSE HANGEN BRUSTLIN, INC.
500 Southborough Dr.
Suite 105B
South Portland, ME 04106
TEL (207) 889-3150
FAX (207) 253-5596

MAINE TURNPIKE

THE GOLD STAR MEMORIAL HIGHWAY

MTA PROJECT MANAGER: Ralph Norwood, IV

SUPERSTRUCTURE REPLACEMENT
MAPLE STREET UNDERPASS

CURTAIN WALL DETAILS (2 OF 2)

VHB: 55068.00
CONTRACT: 2016.04

SHEET NUMBER: 53
53 OF 70

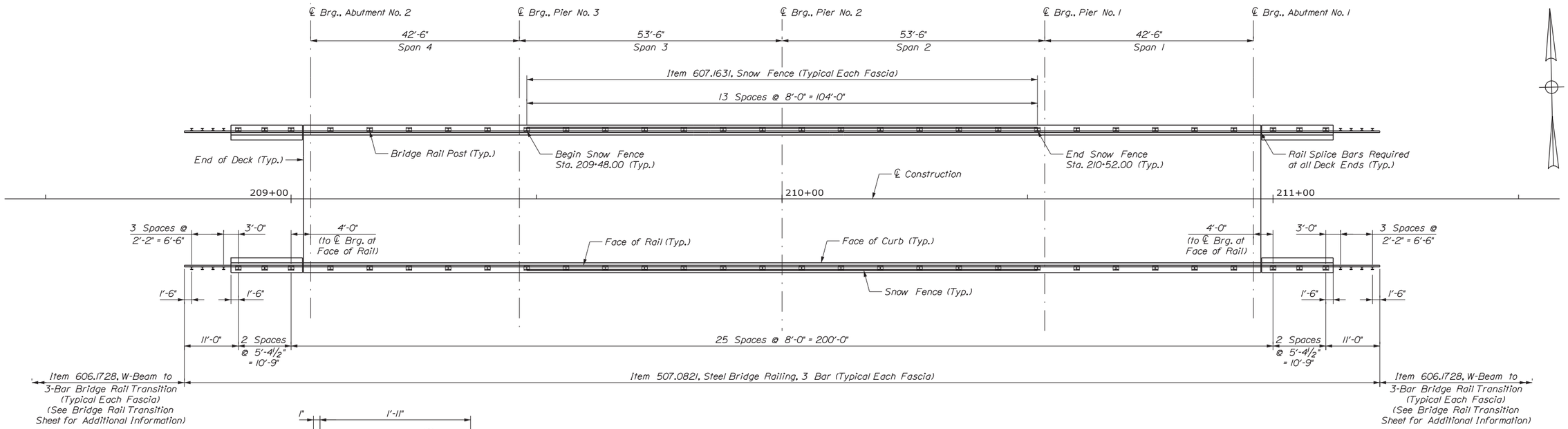

BRIDGE RAIL LAYOUT
(Dimensions at Face of Rail)
Scale: 3/32" = 1'-0"

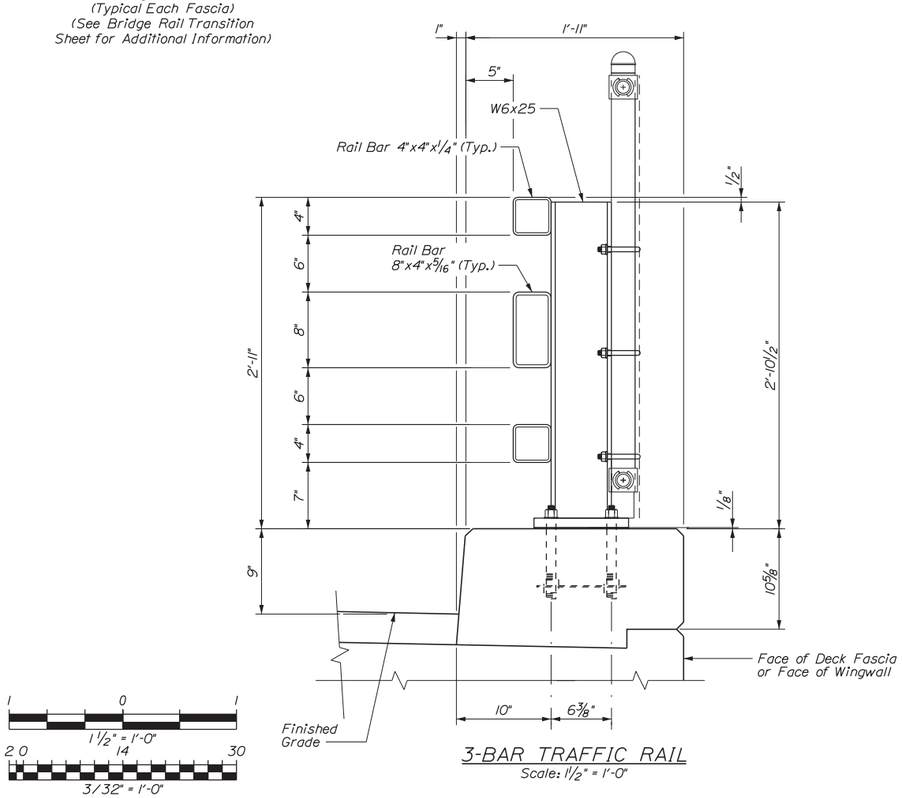

3-BAR TRAFFIC RAIL
Scale: 1 1/2" = 1'-0"

BRIDGE RAIL MATERIAL NOTES:

1. Structural tubing shall conform to the requirements of ASTM A500, Grade B, Structural Tubing. Rail tubing shall meet the longitudinal charpy v-notch requirements of 15 ft. Lbs. At 0 degrees F. For ASTM A500, Grade B. The test samples shall be taken after forming the tubes.
2. Rail posts and base plates shall conform to the requirements of ASTM A572 Grade 50, except anchor plates may be ASTM A36.
3. Bolts and matching nuts for rail-to-post attachment shall conform to ASTM A307 or A449. All other bolts and nuts shall conform to ASTM 307 and ASTM 563 Grade A respectively or better, except ASTM A307 nuts may be used on the bottom of anchor assembly. Washers shall be hardened steel commercial Type A plain wide washers and shall meet dimensional requirements of A.N.S.I. B18.22. Anchor rods shall conform to ASTM A449.
4. All steel components (except stainless) shall be galvanized after fabrication in conformance to AASHTO M232 (ASTM A153) and AASHTO M111 (ASTM A123). The galvanizing kettle shall have 0.05 to 0.09 percent nickel. Galvanizing surfaces shall have a uniform appearance and galvanizing material shall be properly stored.
5. Preformed bearing pads (1/8" thick) shall conform to AASHTO M251.
6. See MaineDOT Standard Details of Steel Bridge Railing for notes and other information not shown.

Date:12/31/2015

Filename: ...\cad\st\planset\054_Rail_01.dgn

Scale: AS NOTED

No.	Revision	By	Date

Designed by: vhb

CONSULTANT PROJECT MANAGER: T. Bryant

	By	Date		By	Date
Designed	CLC	12/2015	Checked	TJC	12/2015
Drawn	CLC	12/2015	In Charge of	TSB	12/2015

VANASSE HANGEN BRUSTLIN, INC.
500 Southborough Dr.
Suite 105B
South Portland, ME 04106
TEL (207) 889-3150
FAX (207) 253-5596

MAINE TURNPIKE
THE GOLD STAR MEMORIAL HIGHWAY

MTA PROJECT MANAGER: Ralph Norwood, IV

SUPERSTRUCTURE REPLACEMENT
MAPLE STREET UNDERPASS

BRIDGE RAIL DETAILS

VHB: 55068.00
CONTRACT: 2016.04

SHEET NUMBER: 54

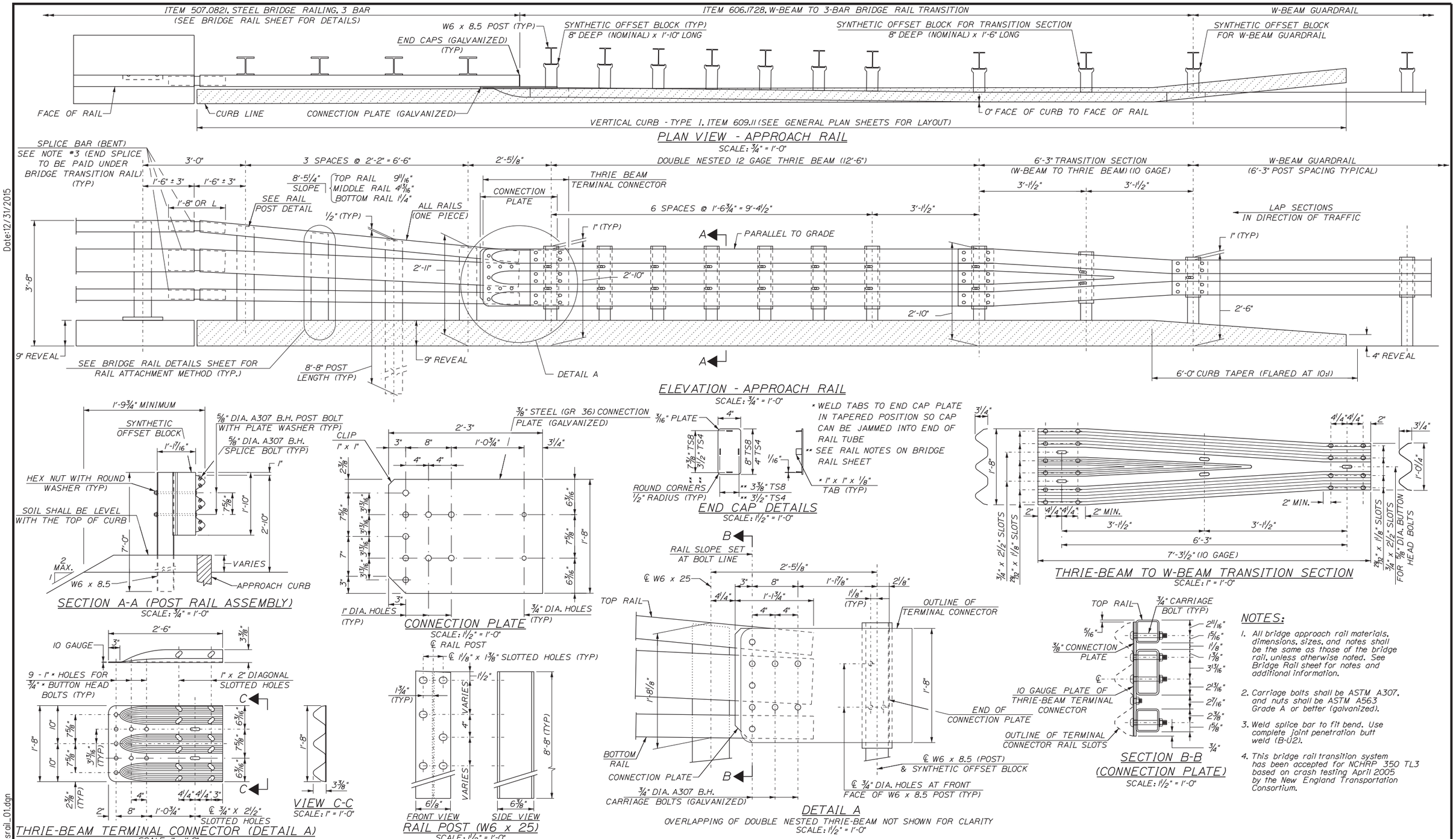

NOTES:

1. All bridge approach rail materials, dimensions, sizes, and notes shall be the same as those of the bridge rail, unless otherwise noted. See Bridge Rail sheet for notes and additional information.
2. Carriage bolts shall be ASTM A307, and nuts shall be ASTM A563 Grade A or better (galvanized).
3. Weld splice bar to fit bend. Use complete joint penetration butt weld (B-U2).
4. This bridge rail transition system has been accepted for NCHRP 350 TL3 based on crash testing April 2005 by the New England Transportation Consortium.

Date: 12/31/2015

Filename: ...\planset\055_Transrail_01.dgn

Scale: AS NOTED

No.	Revision	By	Date

Designed by:

vhb

CONSULTANT PROJECT MANAGER: T. Bryant

	By	Date		By	Date
Designed	MED	12/2015	Checked	GME	12/2015
Drawn	CLC	12/2015	In Charge of	TSB	12/2015

VANASSE HANGEN BRUSTLIN, INC.
500 Southborough Dr.
Suite 105B
South Portland, ME 04106
TEL (207) 889-3150
FAX (207) 253-5596

MAINE TURNPIKE

THE GOLD STAR MEMORIAL HIGHWAY

MTA PROJECT MANAGER: Ralph Norwood, IV

SUPERSTRUCTURE REPLACEMENT
MAPLE STREET UNDERPASS

BRIDGE RAIL TRANSITION

VHB: 55068.00
CONTRACT: 2016.04

SHEET NUMBER: 55

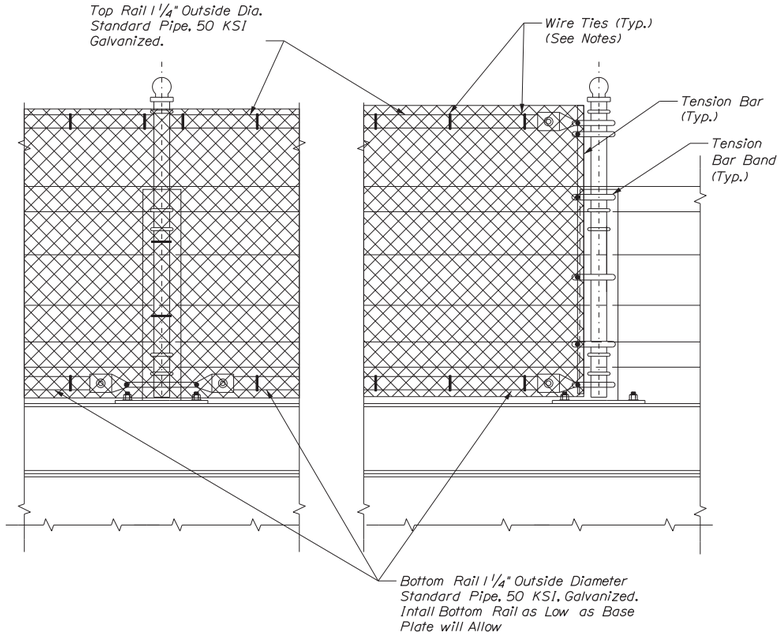

ELEVATION INTERIOR POST

ELEVATION END POST

SNOW FENCE POST ATTACHMENT TO TWO - RAIL RAILING

Scale: 1" = 1'-0"

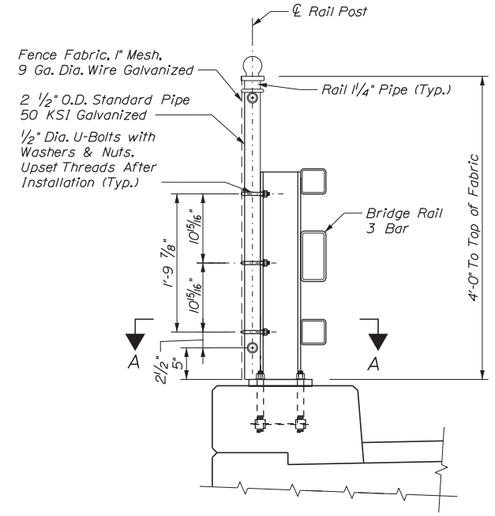

BARRIER DETAIL

Scale: 1" = 1'-0"

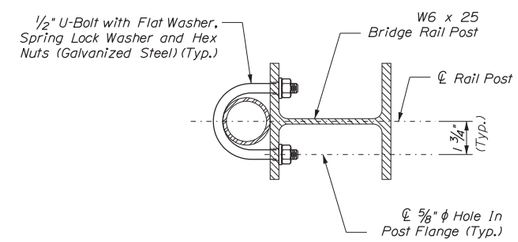

SECTION A-A

Scale: 3" = 1'-0"

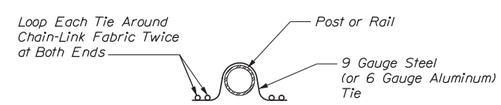

DOUBLE PIGTAILED TIE

Not to Scale

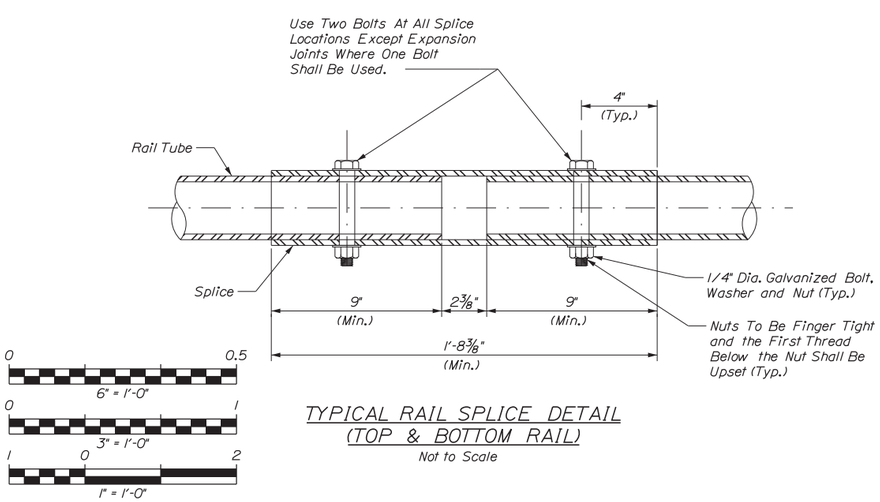

TYPICAL RAIL SPLICE DETAIL (TOP & BOTTOM RAIL)

Not to Scale

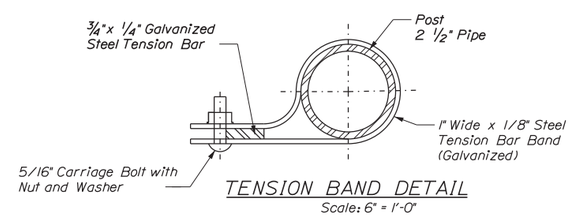

TENSION BAND DETAIL

Scale: 6" = 1'-0"

SNOW FENCE NOTES

1. Chain-link fabric shall be 9 gauge steel, zinc-coated conforming to AASHTO M181, Type I, Class D (ASTM A392), aluminum-coated conforming to AASHTO M181, Type II (ASTM A491). Chain-link fabric shall be knuckled on top and bottom. The size of wire mesh (fabric) shall be 1 1/2".
2. Wire ties shall be standard round 9 gauge zinc- or aluminum-coated steel or 6 gauge aluminum alloy conforming to ASTM F626. All ties shall be wrapped around chain-link fabric twice (double pigtailed) at both ends. Space ties @ 6" o.c. to bottom rail and @ 12" o.c. to all posts and other rails. Mechanical/Power fastened fence ties acceptable.
3. Post, rail pipe and splice sleave shall be hot-dip galvanized steel conforming to AASHTO M181, Grade 1 (ASTM F1083) or aluminum alloy conforming to AASHTO M181 (ASTM B429, alloy 6063-T6). All pipe shall be schedule 40, standard weight. Nominal pipe sizes are shown on the drawing.
4. Tension bars and bar bands shall be steel or aluminum alloy conforming to AASHTO M181 (ASTM F626). Steel components shall be hot-dip galvanized in accordance with AASHTO M111 (ASTM A123) or AASHTO M232 (ASTM A153) as applicable.
5. All bolts and nuts shall be steel conforming to ASTM A307 and ASTM A563 Grade A respectively. Washers shall be hardened steel commercial Type A plain and shall meet the dimensional requirements of ANSI B18.22. All bolts, nuts and washers shall be hot-dip galvanized in accordance with AASHTO M111 (ASTM A123) or AASHTO M232 (ASTM A153) as applicable.
6. Rail may be field cut (sawn) to fit post spacing. Galvanized rail, cut or drilled as allowed.
7. See Bridge Rail Details Sheet for additional details.
8. Post Caps Shall Be Securely Attached to Posts.

Date:12/31/2015

Filename: ...\cad\st\planset\056_Snow_01.dgn

Scale: AS NOTED

No.	Revision	By	Date

Designed by: vhb

CONSULTANT PROJECT MANAGER: T. Bryant

	By	Date		By	Date
Designed	MED	12/2015	Checked	GME	12/2015
Drawn	CMD	12/2015	In Charge of	TSB	12/2015

VANASSE HANGEN BRUSTLIN, INC.
500 Southborough Dr.
Suite 105B
South Portland, ME 04106
TEL (207) 889-3150
FAX (207) 253-5596

MAINE TURNPIKE

THE GOLD STAR MEMORIAL HIGHWAY

MTA PROJECT MANAGER: Ralph Norwood, IV

SUPERSTRUCTURE REPLACEMENT
MAPLE STREET UNDERPASS

SNOW FENCE DETAILS

VHB: 55068.00

CONTRACT: 2016.04

SHEET NUMBER: 56

STRAIGHT BARS

MARK	QTY.	LENGTH	LOCATION	MARK	QTY.	LENGTH	LOCATION
S501	782	29'-6"	Deck Slab and Curbs				
S502	356	45'-0"					
S503	89	25'-0"					
S601	117	26'-0"					
S510	6	29'-6"	Curtain Wall				
S511	2	28'-6"					
S512	2	27'-6"					
A501	54	2'-6"	Abutment 1				
A502	2	25'-8"					
A503	2	26'-8"					
A504	8	27'-8"					
A505	3	5'-8"					
A510	22	14'-3"	Abut. 1 Wingwalls				
B501	54	2'-6"	Abutment 2				
B502	2	25'-8"					
B503	2	26'-8"					
B504	8	27'-8"					
B505	3	5'-8"					
B510	22	14'-3"	Abut. 2 Wingwalls				
1P501	4	26'-2"	Pier 1				
1P502	6	5'-8"					
1P801	6	27'-1"					
2P501	4	26'-2"	Pier 2				
2P502	6	5'-8"					
2P801	6	27'-1"					
3P501	4	26'-2"	Pier 3				
3P502	6	5'-8"					
3P801	6	27'-1"					

BENT BARS

MARK	QTY.	LENGTH	TYPE	A	B	C	D	E	F	G	H	O	R	LOCATION
S550	536	5'-9"	S	0'-10"	1'-3"	1'-7"	1'-3"			0'-10"				Deck Slab and Curbs
S650	782	7'-0"	C	0'-8"	6'-4"	0'-0"								
S560	58	3'-1"	L	2'-1"	1'-0"									Curtain Wall
S561	58	3'-5"	L	2'-5"	1'-0"									
S562	4	2'-1"	L	1'-1"	1'-0"									
S563	4	2'-5"	L	1'-5"	1'-0"									
S564	16	4'-1"	C	0'-7"	2'-11"	0'-7"								
S565	24	6'-9"	C	0'-7"	5'-7"	0'-7"								
S566	76	3'-0"	S		0'-11"	1'-2"	0'-11"							
S567	40	4'-4"	S		1'-11"	0'-6"	1'-11"							
S568	36	5'-0"	S		1'-11"	1'-2"	1'-11"							
S569	12	6'-6"	S		2'-8"	1'-2"	2'-8"							
S570	4	2'-8"	S		0'-9"	1'-2"	0'-9"							
S571	8	3'-3"	SJ		1'-2"	1'-1"	1'-0"							
A550	27	6'-3"	S	0'-0"	1'-5"	3'-5"	1'-5"			0'-0"				Abutment 1
A551	31	5'-2"	S	0'-0"	1'-6"	2'-2"	1'-6"			0'-0"				
A552	6	3'-10"	SJ	0'-0"	1'-3"	1'-1"	1'-6"	0'-0"						
A553	6	6'-5"	S	0'-0"	1'-6"	3'-5"	1'-6"			0'-0"				
A560	24	4'-10"	SJ	2'-4"	0'-11"	1'-7"	0'-0"	0'-0"						Abut. 1 Wingwalls
A561	24	5'-2"	G	2'-5"	1'-7"	1'-2"	0'-0"	0'-0"			1'-4"			
A562	8	3'-7"	SJ	1'-1"	0'-11"	1'-7"	0'-0"	0'-0"						
A563	8	4'-0"	G	2'-5"	1'-7"	0'-0"	0'-0"	0'-0"			1'-4"			
A564	2	3'-0"	V				1'-6"	1'-6"			1'-4"			
A565	50	4'-7"	S	0'-0"	1'-6"	1'-7"	1'-6"			0'-0"				
B550	27	5'-11"	S	0'-0"	1'-3"	3'-5"	1'-3"			0'-0"				Abutment 2
B551	31	5'-2"	S	0'-0"	1'-6"	2'-2"	1'-6"			0'-0"				
B552	6	3'-9"	SJ	0'-0"	1'-3"	1'-0"	1'-6"	0'-0"						
B553	6	6'-5"	S	0'-0"	1'-6"	3'-5"	1'-6"			0'-0"				
B560	26	4'-9"	SJ	2'-3"	0'-11"	1'-7"	0'-0"	0'-0"						Abut. 2 Wingwalls
B561	26	5'-3"	G	2'-6"	1'-7"	1'-2"	0'-0"	0'-0"			1'-4"			
B562	6	3'-7"	SJ	1'-1"	0'-11"	1'-7"	0'-0"	0'-0"						
B563	6	4'-1"	G	2'-6"	1'-7"	0'-0"	0'-0"	0'-0"			1'-4"			
B564	2	3'-0"	V				1'-6"	1'-6"			1'-4"			
B565	50	4'-7"	S	0'-0"	1'-6"	1'-7"	1'-6"			0'-0"				
1P550	54	2'-7"	C	0'-7"	2'-0"	0'-0"								Pier 1
1P551	26	6'-8"	S	0'-0"	2'-0"	2'-8"	2'-0"			0'-0"				
1P552	6	7'-2"	S	0'-0"	2'-3"	2'-8"	2'-3"			0'-0"				
1P553	8	3'-10"	A				2'-0"	1'-10"			1'-9 3/8"			
1P554	6	5'-6"	S	0'-0"	1'-6"	2'-6"	1'-6"			0'-0"				
2P550	54	2'-7"	C	0'-7"	2'-0"	0'-0"								Pier 2
2P551	26	6'-8"	S	0'-0"	2'-0"	2'-8"	2'-0"			0'-0"				
2P552	6	7'-2"	S	0'-0"	2'-3"	2'-8"	2'-3"			0'-0"				
2P553	8	3'-10"	A				2'-0"	1'-10"			1'-9 3/8"			
2P554	6	5'-6"	S	0'-0"	1'-6"	2'-6"	1'-6"			0'-0"				
3P550	54	2'-7"	C	0'-7"	2'-0"	0'-0"								Pier 3
3P551	26	6'-8"	S	0'-0"	2'-0"	2'-8"	2'-0"			0'-0"				
3P552	6	7'-0"	S	0'-0"	2'-2"	2'-8"	2'-2"			0'-0"				
3P553	8	3'-10"	A				2'-0"	1'-10"			1'-9 3/8"			
3P554	6	5'-6"	S	0'-0"	1'-6"	2'-6"	1'-6"			0'-0"				

Note: The following bars are uncoated (plain): 1P550, 2P550, and 3P550

TYPE - BENDING DIAGRAMS

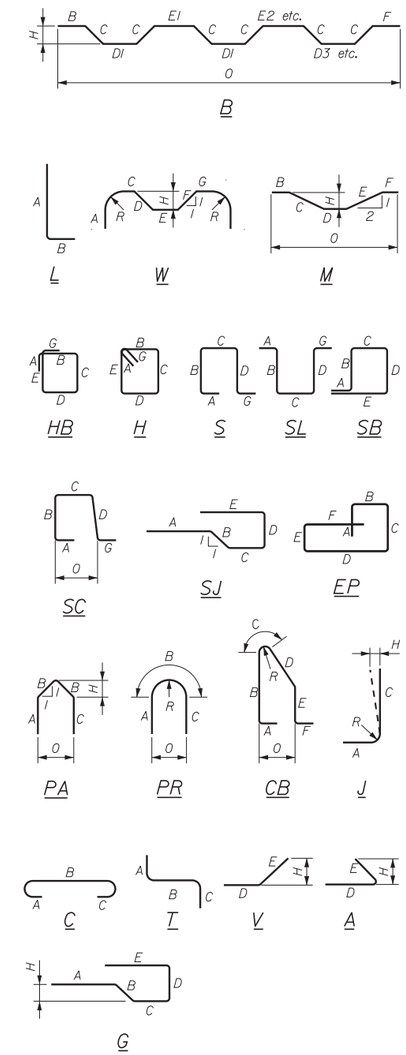

All dimensions are out-to-out of bar.

Bending details and hooks shall conform to the recommendations of the current revision of ACI Standard 315 and ACI Standard 318.

Reinforcing Bar: ASTM A615/A615M, Grade 60

GENERAL NOTES

1. The first digit following the letter(s) of the mark indicate the size ofthe bar:

   Mark "A502" = bar size #5
   Mark "P805" = bar size #8
   Mark "S650" = bar size #6

Scale: NOT TO SCALE

No.	Revision	By	Date

Designed by: vhb

CONSULTANT PROJECT MANAGER: T. Bryant

	By	Date		By	Date
Designed	MED	12/2015	Checked	GME	12/2015
Drawn	CLC	12/2015	In Charge of	TSB	12/2015

VANASSE HANGEN BRUSTLIN, INC.
500 Southborough Dr.
Suite 105B
South Portland, ME 04106
TEL (207) 889-3150
FAX (207) 253-5596

MAINE TURNPIKE

THE GOLD STAR MEMORIAL HIGHWAY

MTA PROJECT MANAGER: Ralph Norwood, IV

SUPERSTRUCTURE REPLACEMENT MAPLE STREET UNDERPASS

REINFORCING STEEL SCHEDULE

VHB: 55068.00
CONTRACT: 2016.04

SHEET NUMBER: 57

Date: 12/31/2015
Filename: ...\st\planset\057_Reinsch_01.dgn

Date:12/31/2015

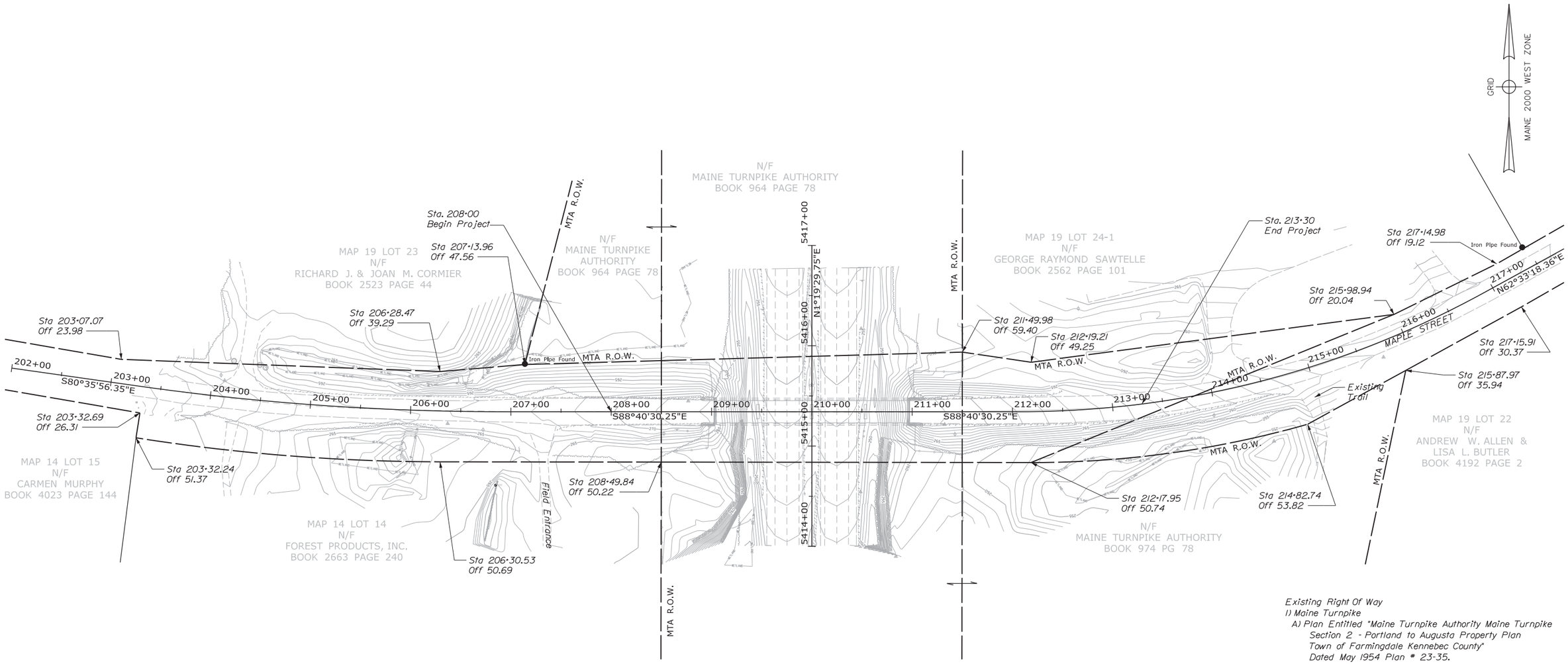

Existing Right Of Way
1) Maine Turnpike
A) Plan Entitled "Maine Turnpike Authority Maine Turnpike Section 2 - Portland to Augusta Property Plan Town of Farmingdale Kennebec County" Dated May 1954 Plan # 23-35.
B) Plan Entitled "Maine Turnpike Authority Maine Turnpike Section 2 - Portland to Augusta Property Plan Town of Farmingdale Kennebec County" Dated May 1954 Plan # 23-34.
C) Plan Book 21 Page 28
D) Plan Book 19 Page 35
E) Plan Book 45 Page 49

R.O.W. NOTE:
Monuments found within vicinity of bridge did not fit well geometrically with dimensions shown on Plan References A & B. A best fit, holding the physical location of the centerlines of the turnpike and Maple Street, and the baseline shown on Plan References A & B, was applied to set the R.O.W. as shown.

Control Information
1) Horizontal Datum - State Plane Zone - Maine 2000 West Zone-Geoid 12a
Vertical Datum - NAVD88

Survey Notes
1) This Plan Is a Result of a Field Survey Performed by Vanasse Hangen Brustlin, Inc. In May 2015.

Scale: 50 0 50 100
1" = 50'-0"

No.	Revision	By	Date

Designed by: vhb

CONSULTANT PROJECT MANAGER: T. Bryant

	By	Date		By	Date
Designed	GEJ	12/2015	Checked	TSB	12/2015
Drawn	CMD	12/2015	In Charge of	TSB	12/2015

VANASSE HANGEN BRUSTLIN, INC.
500 Southborough Dr.
Suite 105B
South Portland, ME 04106
TEL (207) 889-3150
FAX (207) 253-5596

MAINE TURNPIKE

THE GOLD STAR MEMORIAL HIGHWAY

MTA PROJECT MANAGER: Ralph Norwood, IV

SUPERSTRUCTURE REPLACEMENT
MAPLE STREET UNDERPASS

RIGHT OF WAY MAP

VHB: 55068.00
CONTRACT: 2016.04

Filename: ...\planset\058_RightofWay_01.dgn

82.01.04

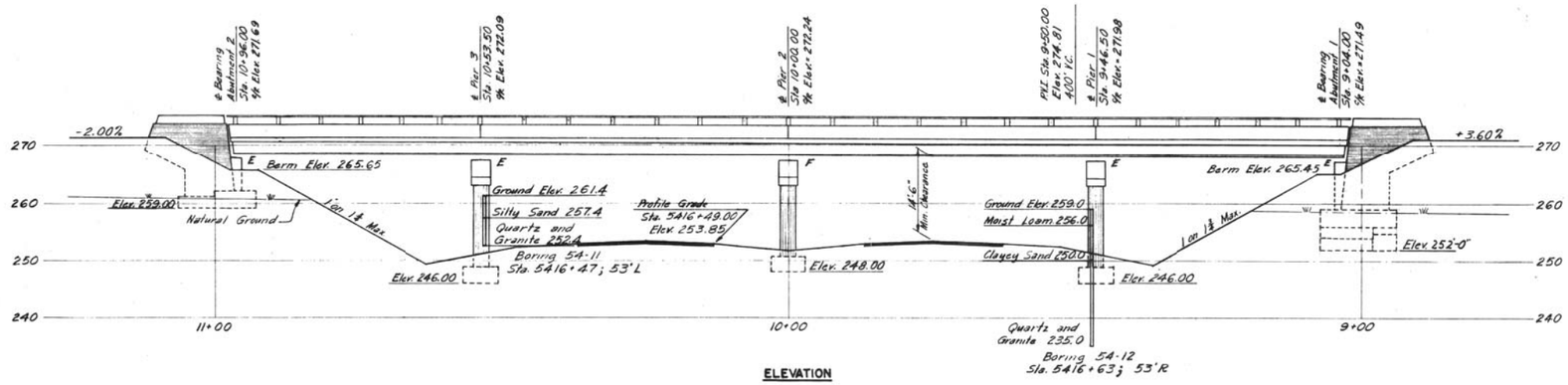

ELEVATION

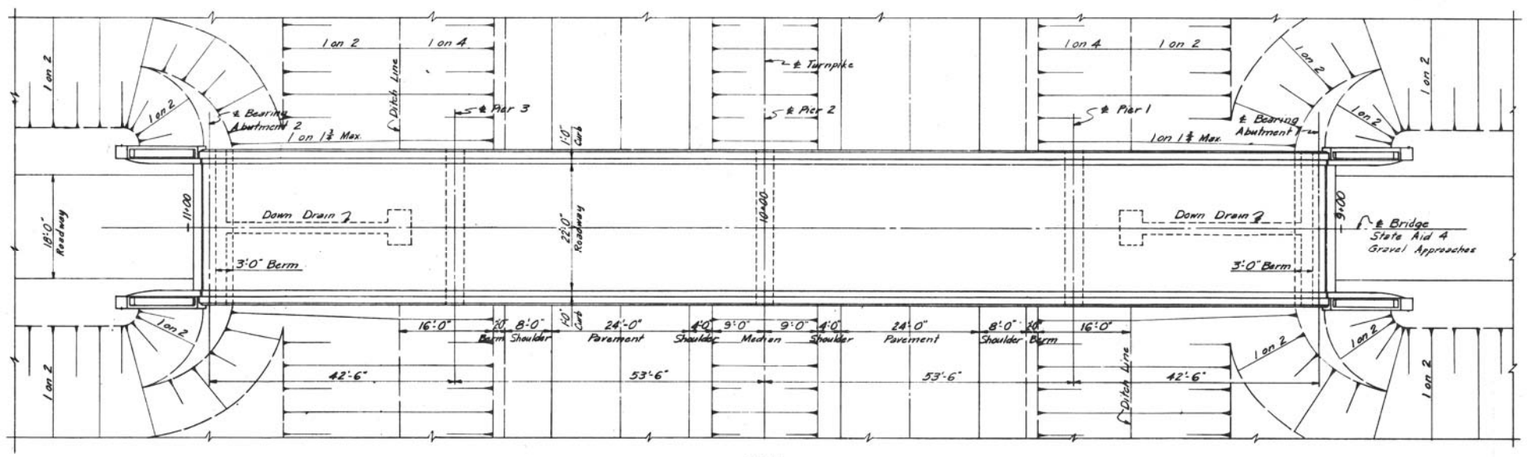

PLAN

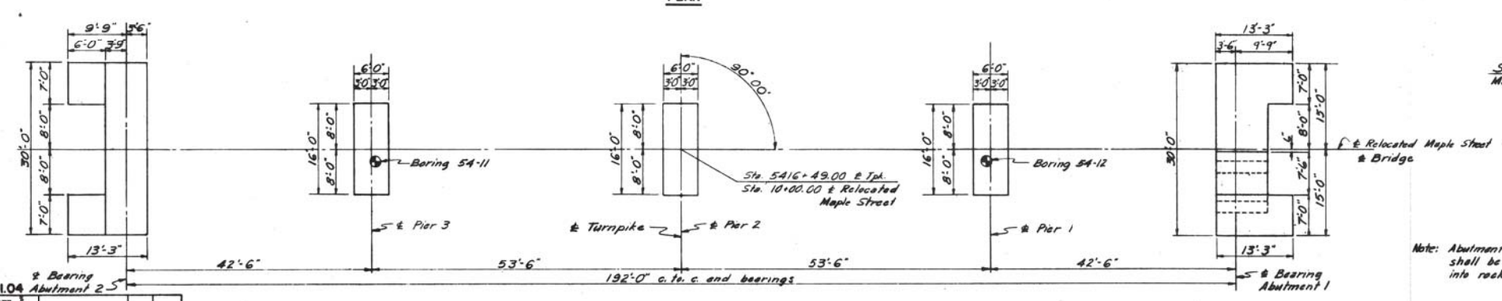

FOOTING PLAN

GENERAL NOTES

Design Specifications: AASHO (1953) with minor modifications.

Design Live Load: H-15

Maximum Soil Pressure: Abutment 2 - 1.8 tons per sq. ft.
Piers - 5.2 tons per sq. ft.

REFERENCES

Drawing Number	Title	Substructure Contract	Superstructure Steel Rehab.	Superstructure Steel Crosbeams	Superstructure Floor Contract
SD-1A	Standard Abutment Details	✓	✓	✓	✓
SD-2	Standard Pier Details	✓	✓	✓	
SD-3	Abutment Drainage Details	✓			
SD-5	Standard Handrail, Bearing Devices & Miscellaneous Details	✓	✓	✓	✓
SD-6	Standard Diaphragm Details		✓	✓	✓
SD-7	Standard Splices for 27WF Beams		✓	✓	
SD-11A	Roadway Expansion Joint Type Y	✓	✓	✓	✓
SD-14	Standard Bridge Floor Cross-section. 20'-0" & 22'-0" Roadways	✓	✓	✓	✓

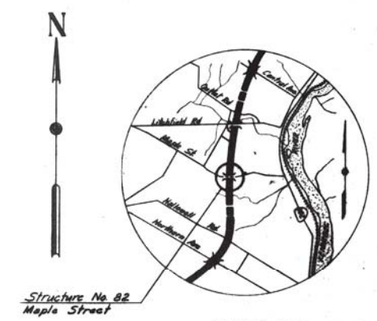

VICINITY MAP
Scale: 1"=1 mile

Note: Abutment 2 footing shall be set 1'-0" Min. into rock.

DRAWING NO. 82.01.04	BY	DATE				
MADE	RFS	5-14-54				
TRACED			2	As-Built	MBW	4-29-52
CHECKED	ASB	5-14-54	1	Abutment 1 footing	ASR	6-30-53
IN CHARGE OF IDSK			No.	REVISION	BY	DATE

MAINE TURNPIKE AUTHORITY
MAINE TURNPIKE
SECTION 2 - PORTLAND TO AUGUSTA

STRUCTURE NO. 82 — TURNPIKE UNDER
MAPLE STREET
STA. 5416 + 49.00
GENERAL PLAN AND ELEVATION

HOWARD, NEEDLES, TAMMEN & BERGENDOFF
CONSULTING ENGINEERS
NEW YORK — KANSAS CITY

SCALE 1/8"=1'-0"
CONTRACT NO. _____
SHEET NO. 357 OF 382

Date:12/31/2015

Filename: ...\st\planset\059_Asbuilt_01.dgn

Scale: NOT TO SCALE

No.	Revision	By	Date

Designed by: vhb

CONSULTANT PROJECT MANAGER: T. Bryant

	By	Date		By	Date
Designed	MED	12/2015	Checked	GME	12/2015
Drawn	CMD	12/2015	In Charge of	TSB	12/2015

VANASSE HANGEN BRUSTLIN, INC.
500 Southborough Dr.
Suite 105B
South Portland, ME 04106
TEL (207) 889-3150
FAX (207) 253-5596

MAINE TURNPIKE

THE GOLD STAR MEMORIAL HIGHWAY

MTA PROJECT MANAGER: Ralph Norwood, IV

SUPERSTRUCTURE REPLACEMENT
MAPLE STREET UNDERPASS

AS-BUILTS AND STANDARD DETAILS

VHB: 55068.00
CONTRACT: 2016.04

SHEET NUMBER: 59
59 OF 70

82.02.04

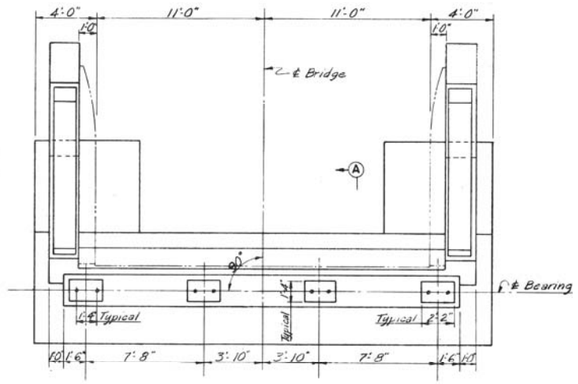

PLAN

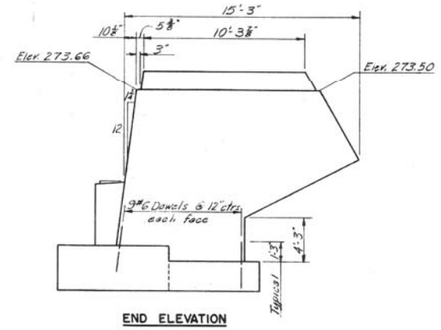

END ELEVATION
ABUTMENT 2

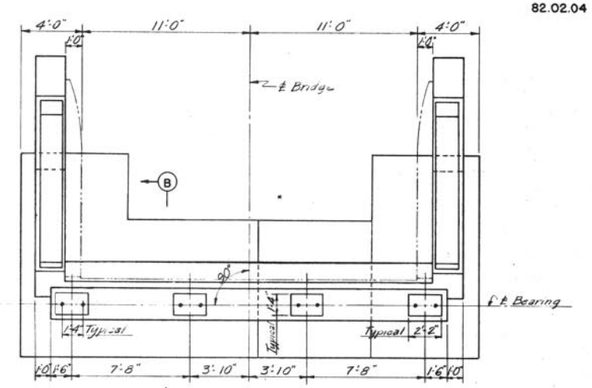

PLAN

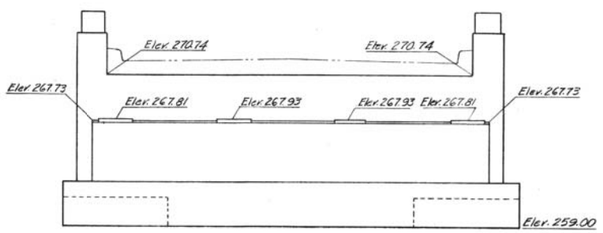

ELEVATION

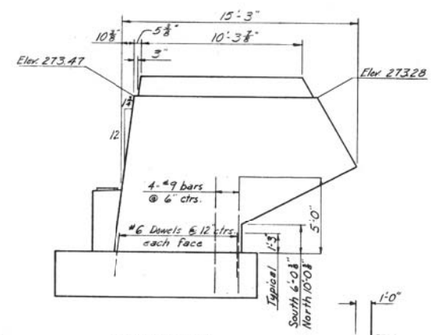

END ELEVATION
ABUTMENT 1

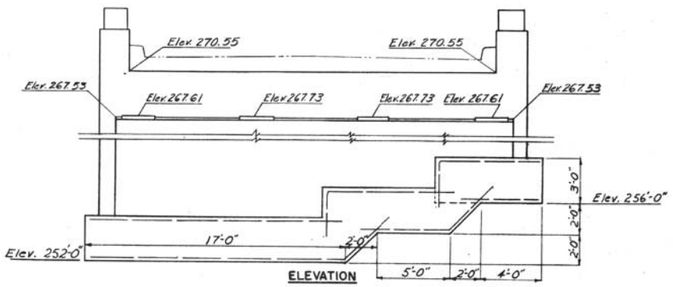

ELEVATION

Note: Abutment 2 footing shall be set 1'-0" Min. into rock.

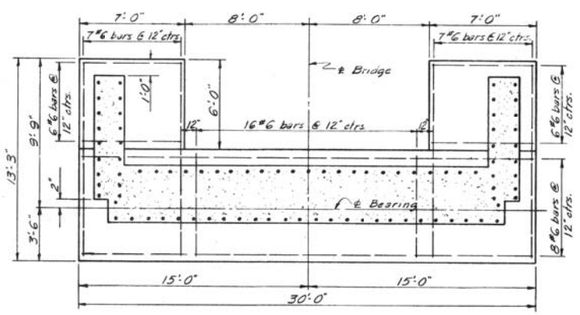

FOOTING PLAN

ABUTMENT 2

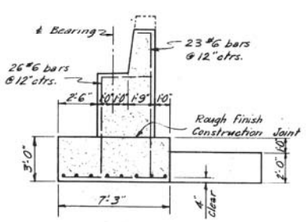

SECTION A-A

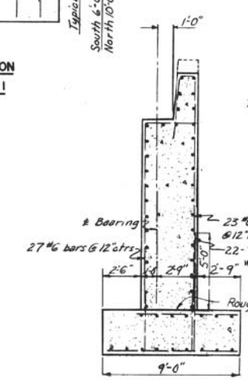

SECTION B-B

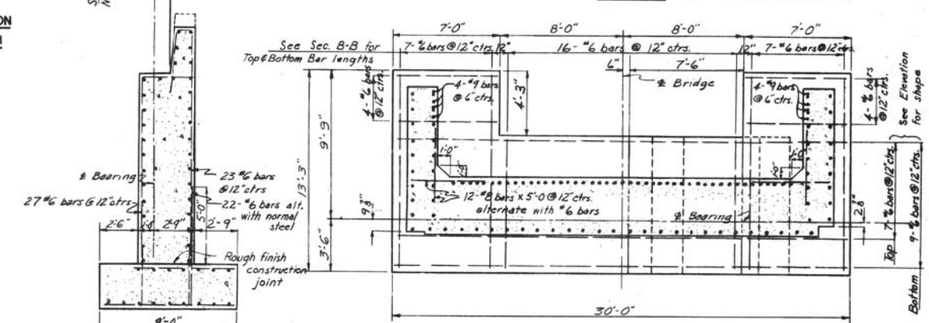

FOOTING PLAN

ABUTMENT 1

DRAWING NO. 82.02.04

	BY	DATE	No	REVISION	BY	DATE
MADE	RFS	5-11-84				
TRACED			2	As-Built	KBW	4-29-92
CHECKED	AER	5-13-84	1	Abutment 1 footing	ASR	6-29-93
IN CHARGE OF	IDSK					

MAINE TURNPIKE AUTHORITY
MAINE TURNPIKE
SECTION 2 - PORTLAND TO AUGUSTA
STRUCTURE NO. 82 TURNPIKE UNDER
MAPLE STREET
STA. 5416 + 49.00
ABUTMENTS
HOWARD, NEEDLES, TAMMEN & BERGENDOFF
CONSULTING ENGINEERS
NEW YORK KANSAS CITY
SCALE: 1/4"=1'-0"
CONTRACT NO.
SHEET NO. 358 OF 382

Date:12/31/2015

Filename: ...\st\planset\060_Asbuilt_02.dgn

Scale: NOT TO SCALE

No.	Revision	By	Date

Designed by:

vhb

CONSULTANT PROJECT MANAGER: T. Bryant

	By	Date		By	Date
Designed	MED	12/2015	Checked	GME	12/2015
Drawn	CMD	12/2015	In Charge of	TSB	12/2015

VANASSE HANGEN BRUSTLIN, INC.
500 Southborough Dr.
Suite 105B
South Portland, ME 04106
TEL (207) 889-3150
FAX (207) 253-5596

MAINE TURNPIKE

THE GOLD STAR MEMORIAL HIGHWAY

MTA PROJECT MANAGER: Ralph Norwood, IV

SUPERSTRUCTURE REPLACEMENT
MAPLE STREET UNDERPASS

AS-BUILTS AND STANDARD DETAILS

VHB: 55068.00
CONTRACT: 2016.04

SHEET NUMBER: 60
60 OF 70

82.03.04

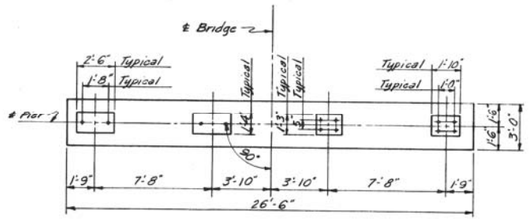

HALF CAP PLAN
PIERS 1 AND 3

HALF CAP PLAN
PIER 2

ELEVATIONS			
Point	Pier 1	Pier 2	Pier 3
A	268.07	268.33	268.18
B	268.19	268.45	268.30
C	268.05	268.31	268.16
D	246.00	248.00	246.00

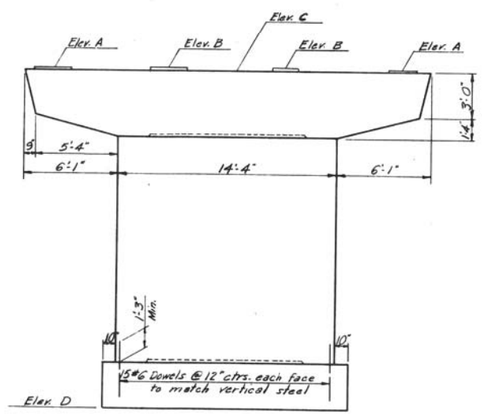

ELEVATION

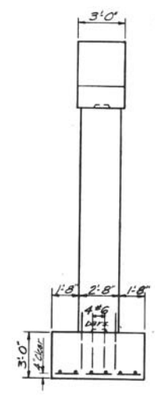

END ELEVATION

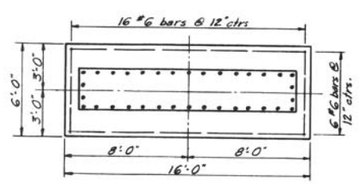

FOOTING PLAN

DRAWING NO. 82.03.04

	BY	DATE				
MADE	RFS	5-6-54				
TRACED						
CHECKED	AEB	5-13-54	1	As-Built	HBW	12-23-56
IN CHARGE OF	IDSK		No.	REVISION	BY	DATE

MAINE TURNPIKE AUTHORITY
MAINE TURNPIKE
SECTION 2 - PORTLAND TO AUGUSTA

STRUCTURE NO. 82 TURNPIKE UNDER
MAPLE STREET
STA. 5416 + 49.00
PIERS

HOWARD, NEEDLES, TAMMEN & BERGENDOFF
CONSULTING ENGINEERS
NEW YORK KANSAS CITY

SCALE: 1/4"=1'-0"
CONTRACT NO. _____
SHEET NO. 359 OF 382

Date:12/31/2015

Filename: ...\st\planset\061_Asbuilt_03.dgn

Scale: NOT TO SCALE

No.	Revision	By	Date

Designed by:

vhb

CONSULTANT PROJECT MANAGER: T. Bryant

	By	Date		By	Date
Designed	MED	12/2015	Checked	GME	12/2015
Drawn	CMD	12/2015	In Charge of	TSB	12/2015

VANASSE HANGEN BRUSTLIN, INC.
500 Southborough Dr.
Suite 105B
South Portland, ME 04106
TEL (207) 889-3150
FAX (207) 253-5596

MAINE TURNPIKE

THE GOLD STAR MEMORIAL HIGHWAY

MTA PROJECT MANAGER: Ralph Norwood, IV

SUPERSTRUCTURE REPLACEMENT
MAPLE STREET UNDERPASS

AS-BUILTS AND STANDARD DETAILS

VHB: 55068.00
CONTRACT: 2016.04

SHEET NUMBER: 61
61 OF 70

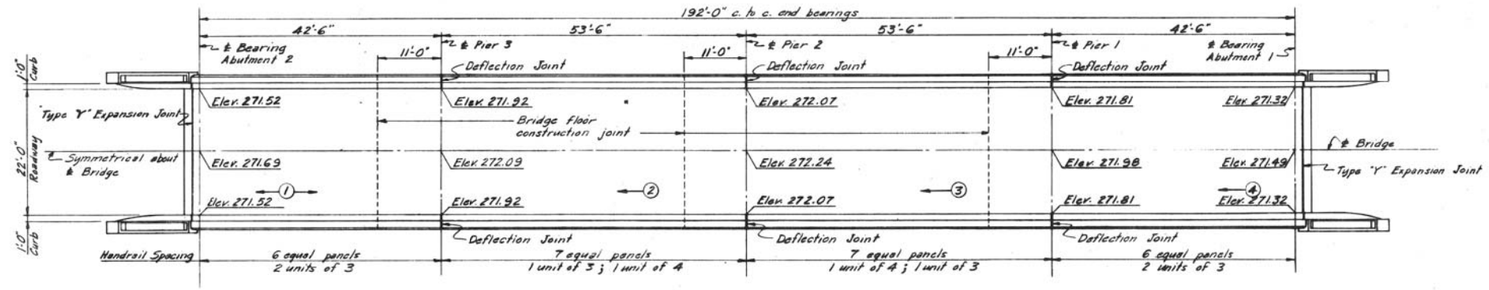

PLAN

Note: Elevations shown on Plan are to top of finished roadway. Floor pouring sequence and direction are noted thus —④ Use "T" Floor (non-composite design) as shown on Standard Drawing No. 14

N

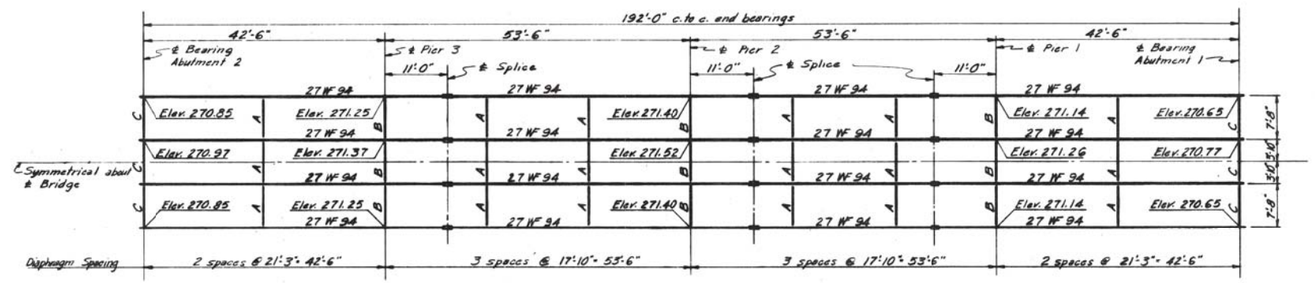

FRAMING PLAN

Note: Elevations shown on Framing Plan are to top of beam flanges. Diaphragms are noted thus: A, B or C. Stiffener angles on outside face of exterior beams at points of support shall be 4"×4"×⅜ Slope shown at ends of beams is true with respect to axis of beams only.

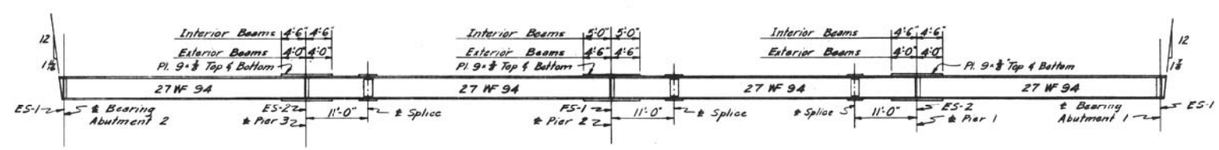

TYPICAL BEAM ELEVATION

Note: Deflections are given at quarter points of spans.

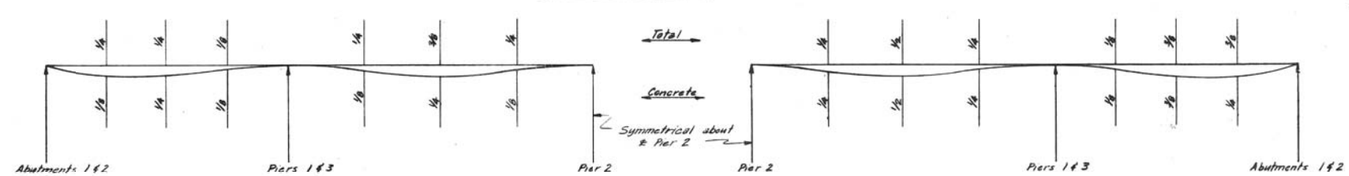

INTERIOR BEAMS — **DEAD LOAD DEFLECTION DIAGRAMS** No Scale — **EXTERIOR BEAMS**

DRAWING NO. 82.04.04						
	BY	DATE				
MADE	RFS	5-7-54				
TRACED						
CHECKED	AEL	5-13-54	1	As-Built	HBH	12-23-96
IN CHARGE OF IDSK			No.	REVISION	BY	DATE

MAINE TURNPIKE AUTHORITY
MAINE TURNPIKE
SECTION 2 - PORTLAND TO AUGUSTA
STRUCTURE NO. 82 — TURNPIKE UNDER
MAPLE STREET
STA. 5416 + 49.00
SUPERSTRUCTURE
HOWARD, NEEDLES, TAMMEN & BERGENDOFF
CONSULTING ENGINEERS
NEW YORK — KANSAS CITY
SCALE: ⅛"=1'-0"
CONTRACT NO. _____
SHEET NO. 360 OF 382

Date:12/31/2015

Filename: ...\st\planset\062_Asbuilt_04.dgn

Scale: NOT TO SCALE			
No.	Revision	By	Date

Designed by: vhb

CONSULTANT PROJECT MANAGER: T. Bryant

	By	Date		By	Date
Designed	MED	12/2015	Checked	GME	12/2015
Drawn	CMD	12/2015	In Charge of	TSB	12/2015

VANASSE HANGEN BRUSTLIN, INC.
500 Southborough Dr.
Suite 105B
South Portland, ME 04106
TEL (207) 889-3150
FAX (207) 253-5596

MAINE TURNPIKE

THE GOLD STAR MEMORIAL HIGHWAY

MTA PROJECT MANAGER: Ralph Norwood, IV

SUPERSTRUCTURE REPLACEMENT
MAPLE STREET UNDERPASS

AS-BUILTS AND STANDARD DETAILS

VHB: 55068.00
CONTRACT: 2016.04

SHEET NUMBER: 62
62 OF 70

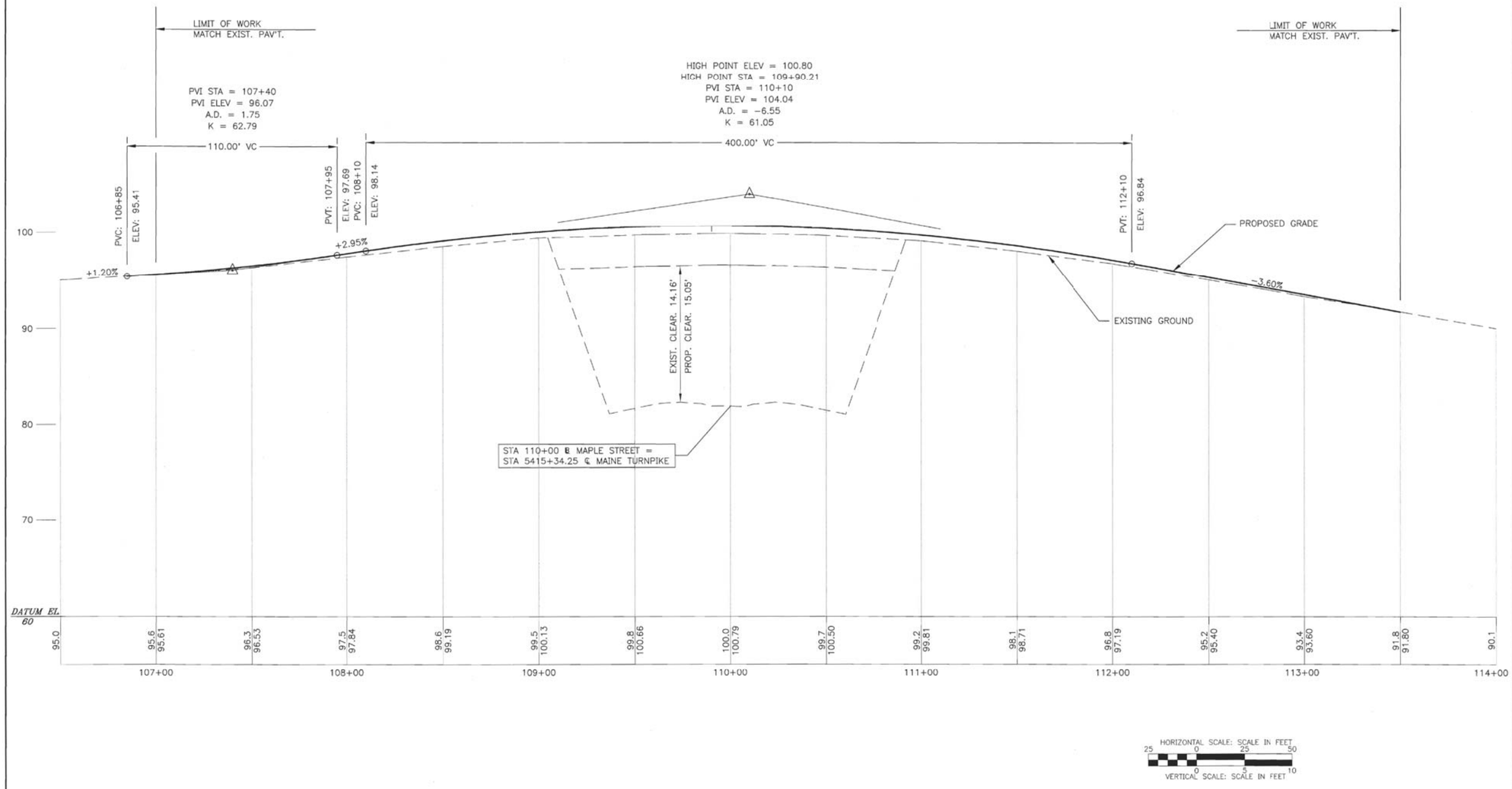

Scale:

No.	Revision	By	Date

Designed by:

HNTB
ARCHITECTS ENGINEERS PLANNERS

	By	Date		By	Date
Designed	DJW	02/00	Checked	RWB	02/00
Drawn	DJW	02/00	In Charge of	RAL	02/00

HNTB CORPORATION
2 Thomas Drive
Westbrook, ME 04092
TEL (207) 774-5155
FAX (207) 772-7410

MAINE TURNPIKE AUTHORITY

MAINE TURNPIKE Trans pass

BRIDGE REPAIR
PROFILE
MAPLE STREET

SHEET NUMBER:
CONTRACT: **2001.13** **12** OF **53**

M:\09009\2000 BRIDGES\MAPLE\CIVIL\MAPLEPRO.DWG 03/27/00 11:22

Date:12/31/2015

Scale: NOT TO SCALE

No.	Revision	By	Date

Designed by:

vhb

CONSULTANT PROJECT MANAGER: T. Bryant

	By	Date		By	Date
Designed	MED	12/2015	Checked	GME	12/2015
Drawn	KDW	12/2015	In Charge of	TSB	12/2015

VANASSE HANGEN BRUSTLIN, INC.
500 Southborough Dr.
Suite 105B
South Portland, ME 04106
TEL (207) 889-3150
FAX (207) 253-5596

MAINE TURNPIKE

THE GOLD STAR
MEMORIAL HIGHWAY

MTA PROJECT MANAGER: Ralph Norwood, IV

SUPERSTRUCTURE REPLACEMENT
MAPLE STREET UNDERPASS

AS-BUILTS AND STANDARD DETAILS

VHB: 55068.00
CONTRACT: 2016.04

SHEET NUMBER: 63
63 OF 70

Filename: ...\st\planset\063_Asbuilt_05.dgn

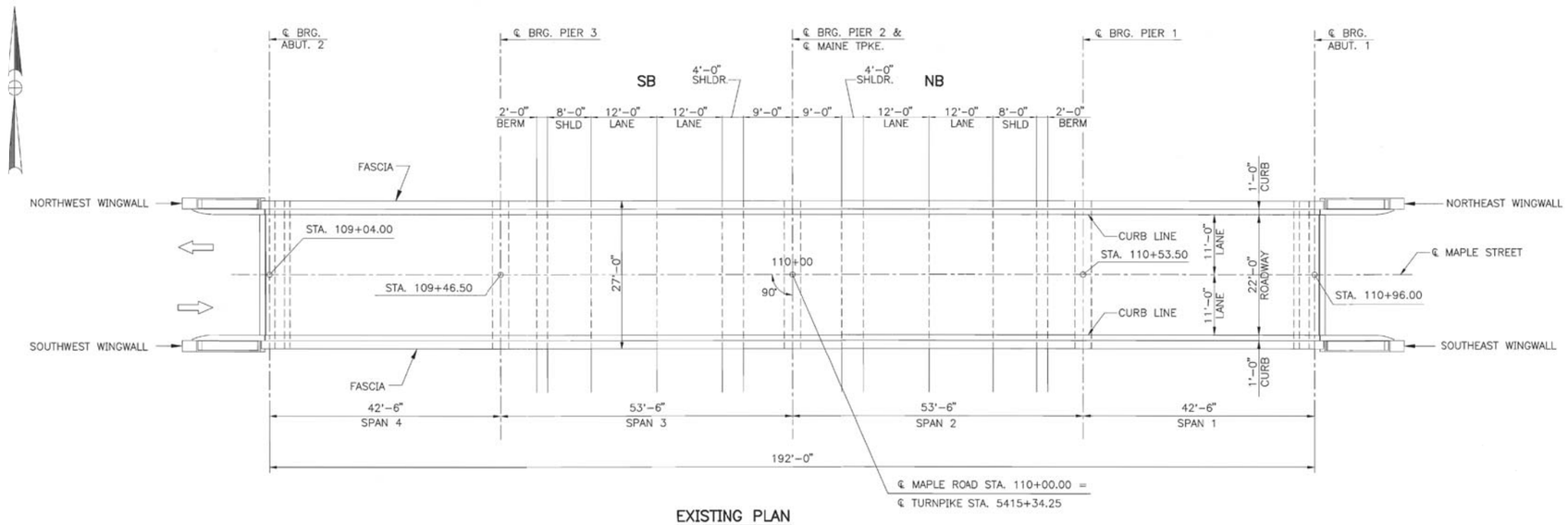

EXISTING PLAN

3/32" = 1'-0"

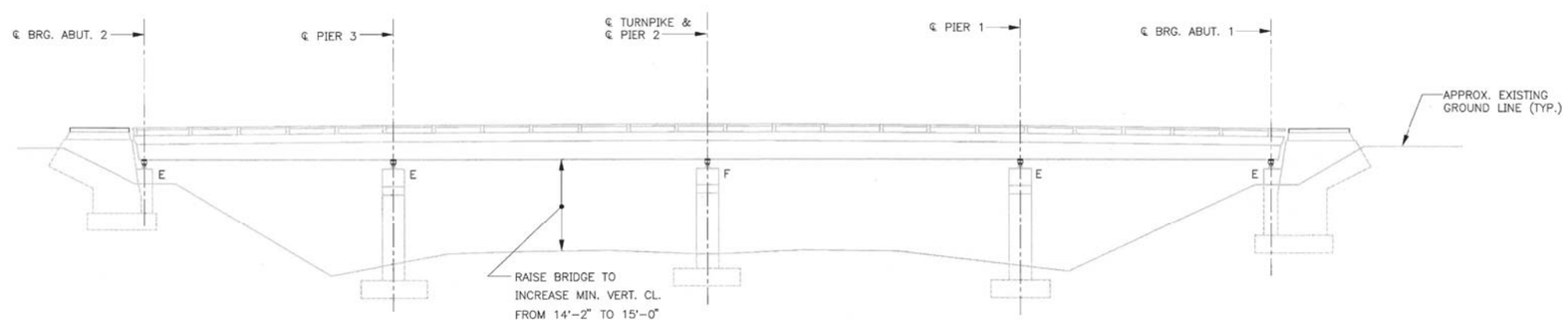

Scale: AS NOTED

No.	Revision	By	Date

Designed by: HNTB ARCHITECTS ENGINEERS PLANNERS

	By	Date		By	Date
Designed	AD	3/00	Checked	ML	3/00
Drawn	RJC	3/00	In Charge of	RAL	3/00

HNTB CORPORATION
2 Thomas Drive
Westbrook, ME 04092
TEL (207) 774-5155
FAX (207) 772-7410

MAINE TURNPIKE AUTHORITY

MAINE TURNPIKE Trans pass

BRIDGE REPAIR
MAPLE STREET UNDERPASS

GENERAL PLAN AND ELEVATION

SHEET NUMBER: MS-1
CONTRACT: 2001.13
19 OF 53

Scale: NOT TO SCALE

No.	Revision	By	Date

Designed by: vhb

CONSULTANT PROJECT MANAGER: T. Bryant

	By	Date		By	Date
Designed	MED	12/2015	Checked	GME	12/2015
Drawn	KDW	12/2015	In Charge of	TSB	12/2015

VANASSE HANGEN BRUSTLIN, INC.
500 Southborough Dr.
Suite 105B
South Portland, ME 04106
TEL (207) 889-3150
FAX (207) 253-5596

MAINE TURNPIKE

THE GOLD STAR MEMORIAL HIGHWAY

MTA PROJECT MANAGER: Ralph Norwood, IV

SUPERSTRUCTURE REPLACEMENT
MAPLE STREET UNDERPASS

AS-BUILTS AND STANDARD DETAILS

VHB: 55068.00
CONTRACT: 2016.04
SHEET NUMBER: 64
64 OF 70

Date: 12/31/2015
M:\09009\2000 BRIDGES\MAPLE\STR\S1GPEMS.DWG 03/21/00 15:25
Filename: ...\st\planset\064_Asbuilt_06.dgn

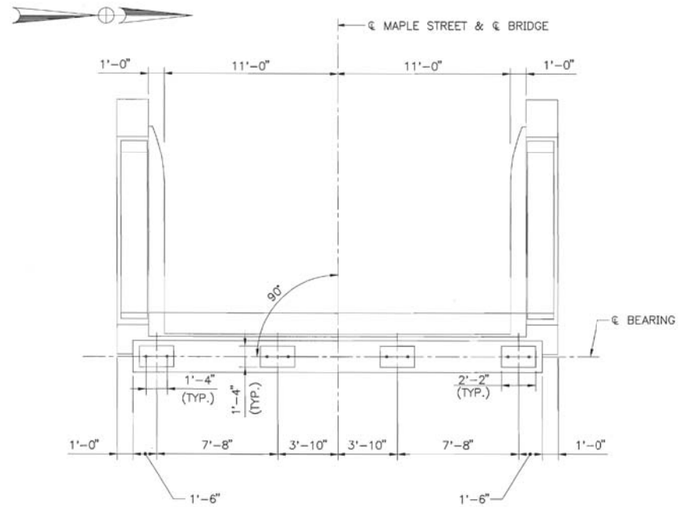

EXISTING PLAN – ABUTMENT 2
1/4"=1'-0"

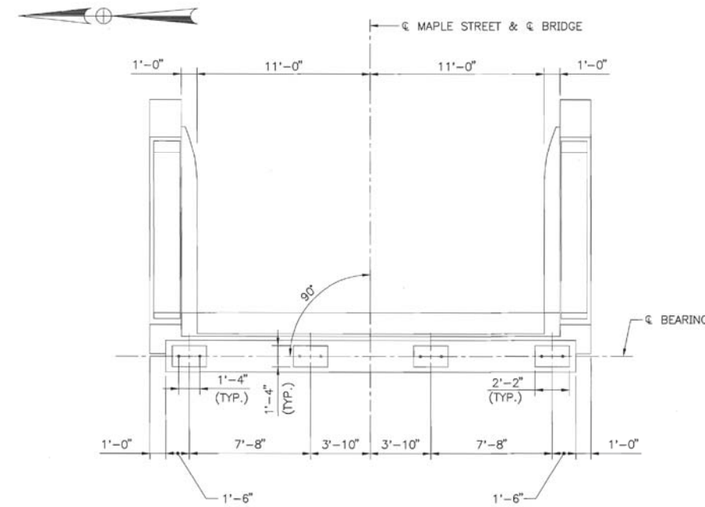

EXISTING PLAN – ABUTMENT 1
1/4"=1'-0"

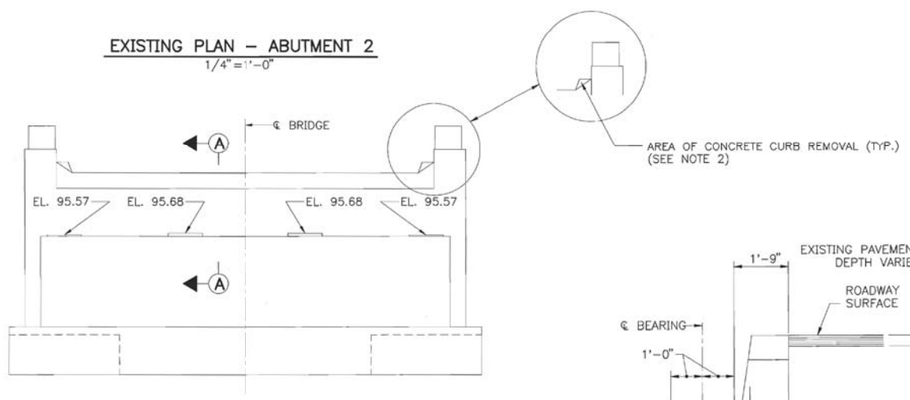

EXISTING ELEVATION – ABUTMENT 2
1/4"=1'-0"

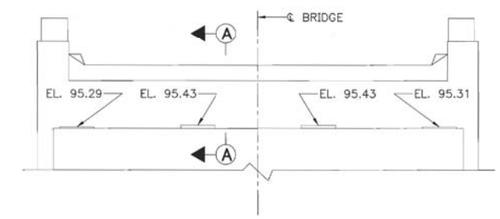

EXISTING ELEVATION – ABUTMENT 1
1/4"=1'-0"

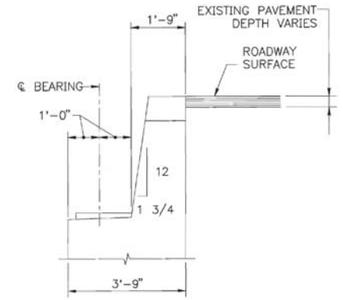

EXISTING SECTION A–A
1/2"=1'-0"

NOTES

1. ELEVATIONS SHOWN ARE FROM FIELD SURVEY.
2. THE CORNERS OF EACH CONCRETE CURB SHALL BE REMOVED TO LIMITS SHOWN. PAYMENT SHALL BE INCIDENTAL TO ITEM 502.21.

Scale:AS NOTED

No.	Revision	By	Date

Designed by:

HNTB
ARCHITECTS ENGINEERS PLANNERS

	By	Date		By	Date
Designed	AD	3/00	Checked	NL	3/00
Drawn	RJC	3/00	In Charge of	RAL	3/00

HNTB CORPORATION
2 Thomas Drive
Westbrook, ME 04092
TEL (207) 774-5155
FAX (207) 772-7410

MAINE TURNPIKE AUTHORITY

MAINE TURNPIKE Trans pass

BRIDGE REPAIR
MAPLE STREET UNDERPASS

EXISTING ABUTMENTS

SHEET NUMBER: MS-2
CONTRACT: 2001.13
20 OF 53

Scale: NOT TO SCALE

No.	Revision	By	Date

Designed by:

vhb

CONSULTANT PROJECT MANAGER: T. Bryant

	By	Date		By	Date
Designed	MED	12/2015	Checked	GME	12/2015
Drawn	KDW	12/2015	In Charge of	TSB	12/2015

VANASSE HANGEN BRUSTLIN, INC.
500 Southborough Dr.
Suite 105B
South Portland, ME 04106
TEL (207) 889-3150
FAX (207) 253-5596

MAINE TURNPIKE

THE GOLD STAR
MEMORIAL HIGHWAY

MTA PROJECT MANAGER: Ralph Norwood, IV

SUPERSTRUCTURE REPLACEMENT
MAPLE STREET UNDERPASS

AS-BUILTS AND STANDARD DETAILS

VHB: 55068.00
CONTRACT: 2016.04
SHEET NUMBER: 65
65 OF 70

Date:12/31/2015
M:\09009\2000 BRIDGES\MAPLE\STR\S1EABTMS.DWG 03/21/00 15:26
Filename: ...\st\planset\065_Asbuilt_07.dgn

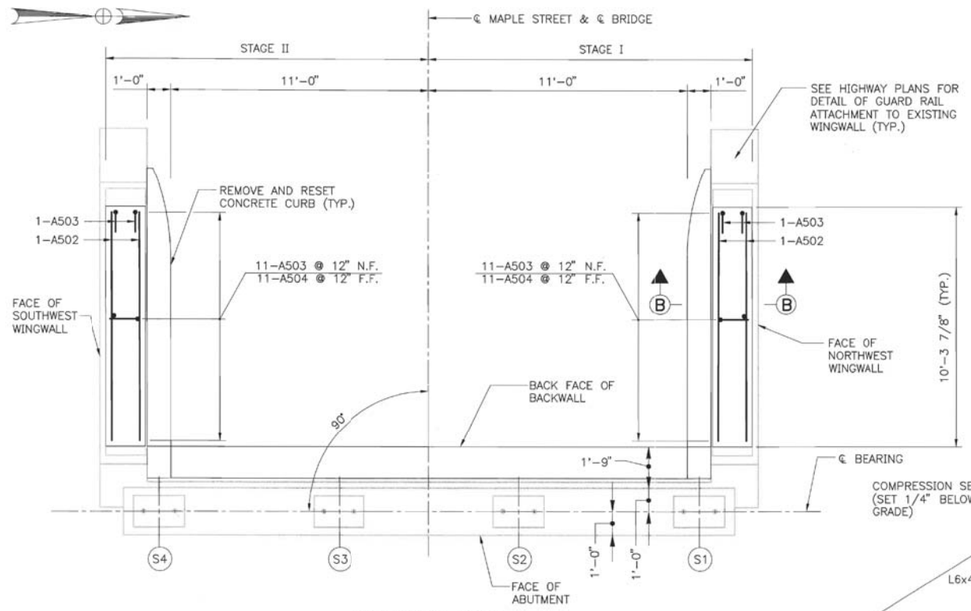

PROPOSED PLAN
3/8"=1'-0"

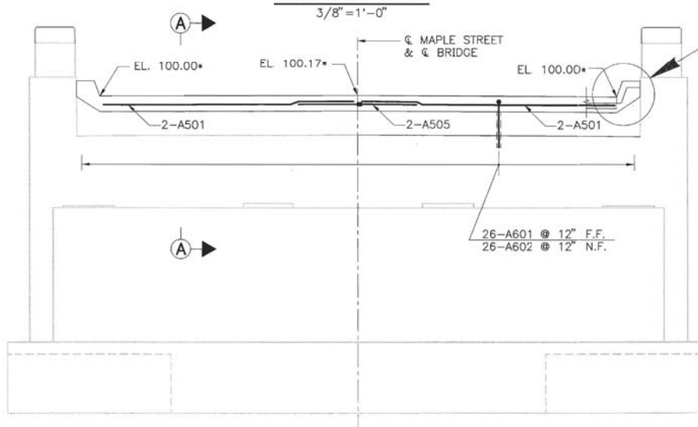

PROPOSED ELEVATION
3/8"=1'-0"

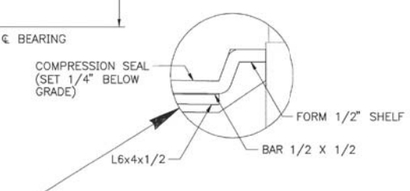

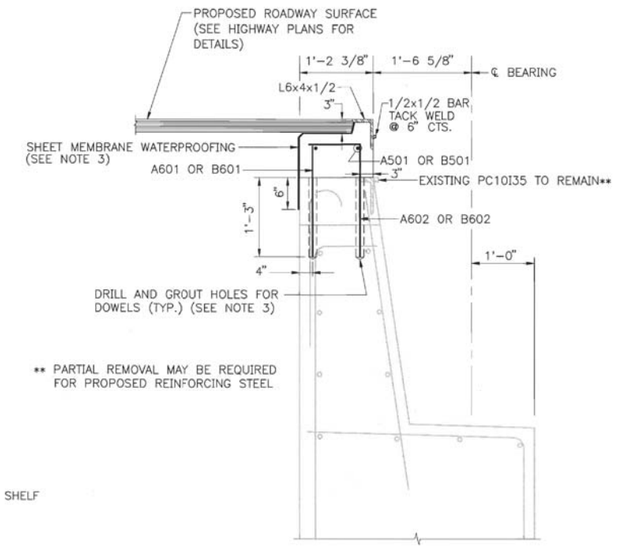

** PARTIAL REMOVAL MAY BE REQUIRED FOR PROPOSED REINFORCING STEEL

SECTION A-A
1" = 1'-0"

MARK	SIZE	NO.	LENGTH FT IN	TYPE	A FT IN	B FT IN
ABUTMENT AND WINGWALL						
*A501	5	4	11 - 2	STR		
*A502	5	4	9 - 11	STR		
*A503	5	26	2 - 10	118	1 - 8	1 - 2
*A504	5	22	1 - 8	STR		
*A505	5	2	5 - 0	113	2 - 6	2 - 6
*A601	6	26	1 - 8	STR		
*A602	6	26	2 - 3	118	1 - 8	0 - 7
*B501	5	4	11 - 2	STR		
*B502	5	4	9 - 11	STR		
*B503	5	26	2 - 10	118	1 - 8	1 - 2
*B504	5	22	1 - 8	STR		
*B505	5	2	5 - 0	113	2 - 6	2 - 6
*B601	6	26	1 - 8	STR		
*B602	6	26	2 - 3	118	1 - 8	0 - 7

* EPOXY-COATED BAR

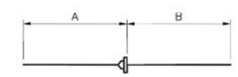

TYPE 113

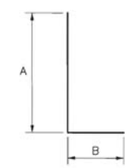

TYPE 118

NOTE:
PAYMENT FOR THREADED COUPLINGS SHALL BE INCIDENTAL TO ITEMS 503.14 AND 503.15.

* ELEVATIONS ARE AT FRONT FACE OF BACKWALL.
N.F. - NEAR FACE
F.F. - FAR FACE

ABUTMENT NOTES

1. FOR SECTION B-B, SEE SHEET NO. MS-4.
2. ALL WORK SHALL BE STAGED CONSTRUCTION.
3. PAYMENT SHALL BE INCIDENTAL TO ITEM 502.21.
4. FOR REINFORCING STEEL SCHEDULE, SEE TABLE THIS SHEET.
5. PREPARE THE EXISTING CONCRETE SURFACES TO BE SOUND, CLEAN AND FREE OF BOND INHIBITING MATERIALS. ANY CONCRETE SURFACES FOUND TO BE UNSOUND, SHALL BE CHIPPED BY THE CONTRACTOR, UNTIL APPROVED OF BY THE ENGINEER. PAYMENT INCIDENTAL TO ITEM 502.21.
6. APPLY A BONDING AGENT TO THE EXISTING CONCRETE SURFACES, BEING MODIFIED, PRIOR TO THE PLACEMENT OF NEW CONCRETE AND TO THE SATISFACTION OF THE ENGINEER. PAYMENT INCIDENTAL TO ITEM 502.21.

Scale:AS NOTED

No.	Revision	By	Date

Designed by:
HNTB
ARCHITECTS ENGINEERS PLANNERS

	By	Date		By	Date
Designed	AD	3/00	Checked	ML	3/00
Drawn	RJC	3/00	In Charge of	RAL	3/00

HNTB CORPORATION
2 Thomas Drive
Westbrook, ME 04092
TEL (207) 774-5155
FAX (207) 772-7410

MAINE TURNPIKE AUTHORITY
MAINE TURNPIKE Trans pass

BRIDGE REPAIR
MAPLE STREET UNDERPASS

ABUTMENT 2 MODIFICATIONS

SHEET NUMBER: MS-3
CONTRACT: 2001.13
21 OF 53

M:\09009\2000 BRIDGES\MAPLE\STR\S1AB2MDMS.DWG 03/23/00 15:05

Date:12/31/2015

Scale: NOT TO SCALE

No.	Revision	By	Date

Designed by:
vhb

CONSULTANT PROJECT MANAGER: T. Bryant

	By	Date		By	Date
Designed	MED	12/2015	Checked	GME	12/2015
Drawn	KDW	12/2015	In Charge of	TSB	12/2015

VANASSE HANGEN BRUSTLIN, INC.
500 Southborough Dr.
Suite 105B
South Portland, ME 04106
TEL (207) 889-3150
FAX (207) 253-5596

MAINE TURNPIKE
THE GOLD STAR MEMORIAL HIGHWAY

MTA PROJECT MANAGER: Ralph Norwood, IV

SUPERSTRUCTURE REPLACEMENT
MAPLE STREET UNDERPASS

AS-BUILTS AND STANDARD DETAILS

VHB: 55068.00
CONTRACT: 2016.04
SHEET NUMBER: 66
66 OF 70

Filename: ...\st\planset\066_Asbuilt_08.dgn

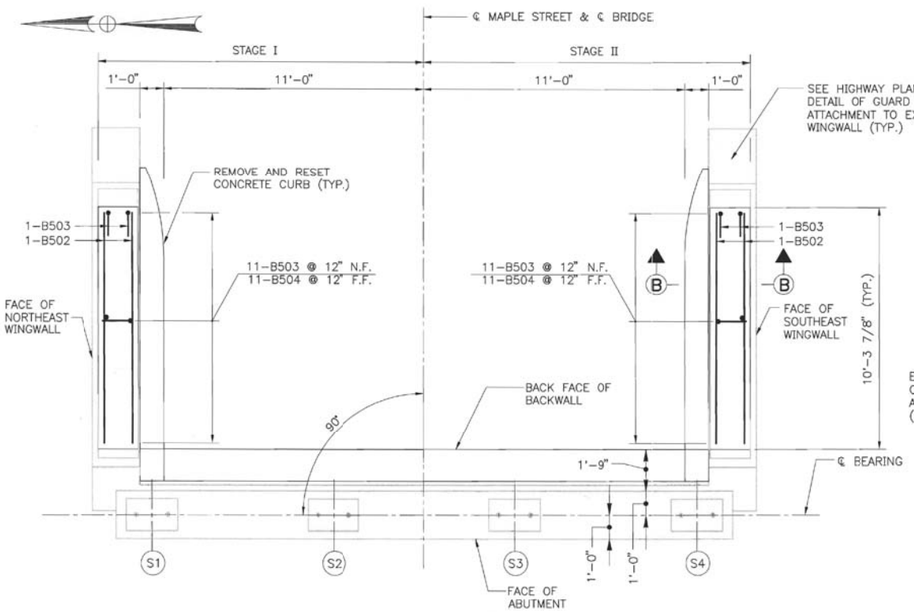

PROPOSED PLAN
3/8" = 1'-0"

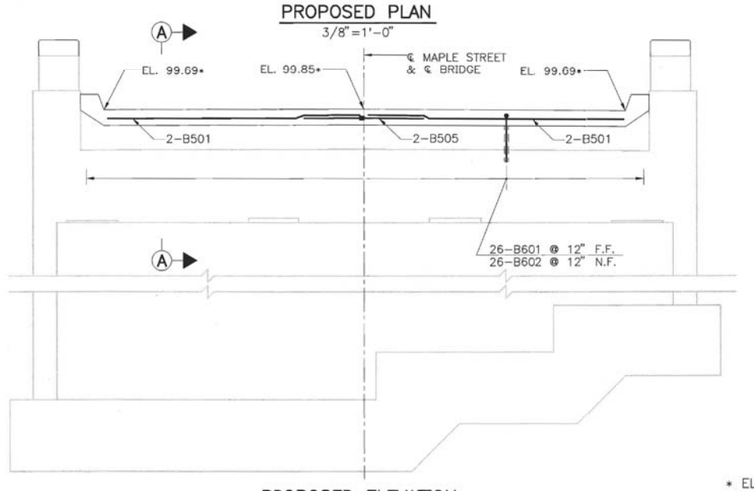

PROPOSED ELEVATION
3/8" = 1'-0"

* ELEVATIONS ARE AT FRONT FACE OF BACKWALL.

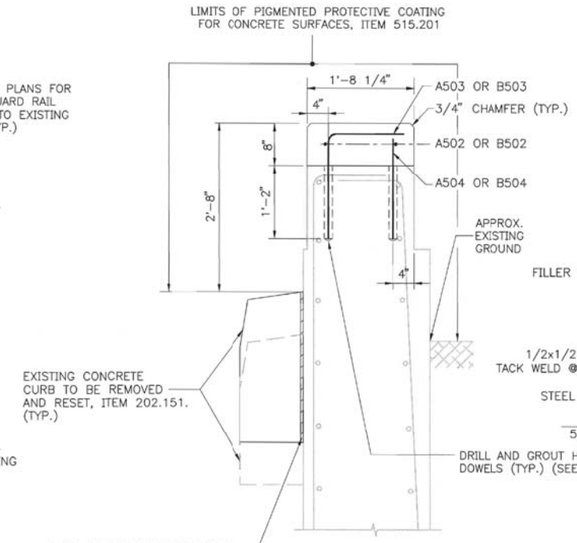

SECTION B-B
1" = 1'-0"

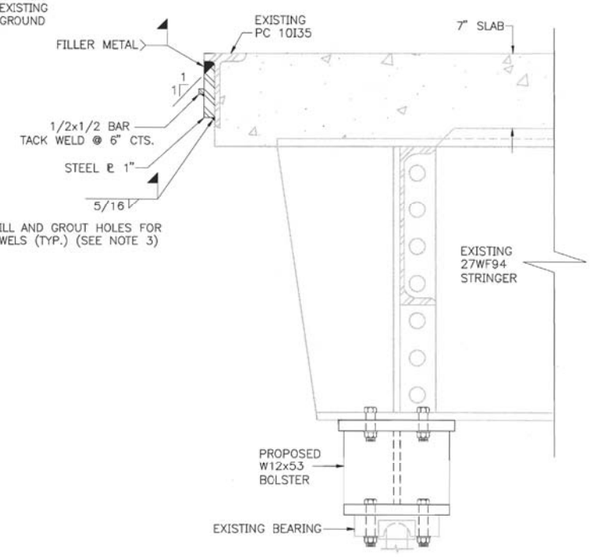

DECK SECTION AT JOINT
2" = 1'-0"

NOTES

1. FOR ABUTMENT NOTES, SEE SHEET NO. MS-3.
2. FOR SECTION A-A, SEE SHEET NO. MS-3.
3. PAYMENT SHALL BE INCIDENTAL TO ITEM 502.21.
4. PAYMENT SHALL BE INCIDENTAL TO ITEM 202.151.

Scale: AS NOTED

No.	Revision	By	Date

Designed by: HNTB ARCHITECTS ENGINEERS PLANNERS

	By	Date		By	Date
Designed	AD	3/00	Checked	ML	3/00
Drawn	RJC	3/00	In Charge of	RAL	3/00

HNTB CORPORATION
2 Thomas Drive
Westbrook, ME 04092
TEL (207) 774-5155
FAX (207) 772-7410

MAINE TURNPIKE AUTHORITY
MAINE TURNPIKE Trans pass

BRIDGE REPAIR
MAPLE STREET UNDERPASS

ABUTMENT 1 MODIFICATIONS

SHEET NUMBER: MS-4
CONTRACT: 2000.13
22 OF 53

M:\09009\2000 BRIDGES\MAPLE\STR\S1AB1MDMS.DWG 03/21/00 15:29

Date:12/31/2015

Scale: NOT TO SCALE

No.	Revision	By	Date

Designed by: vhb

CONSULTANT PROJECT MANAGER: T. Bryant

	By	Date		By	Date
Designed	MED	12/2015	Checked	GME	12/2015
Drawn	KDW	12/2015	In Charge of	TSB	12/2015

VANASSE HANGEN BRUSTLIN, INC.
500 Southborough Dr.
Suite 105B
South Portland, ME 04106
TEL (207) 889-3150
FAX (207) 253-5596

MAINE TURNPIKE

THE GOLD STAR MEMORIAL HIGHWAY

MTA PROJECT MANAGER: Ralph Norwood, IV

SUPERSTRUCTURE REPLACEMENT
MAPLE STREET UNDERPASS

AS-BUILTS AND STANDARD DETAILS

VHB: 55068.00
CONTRACT: 2016.04
SHEET NUMBER: 67
67 OF 70

Filename: ...\st\planset\067_Asbuilt_09.dgn

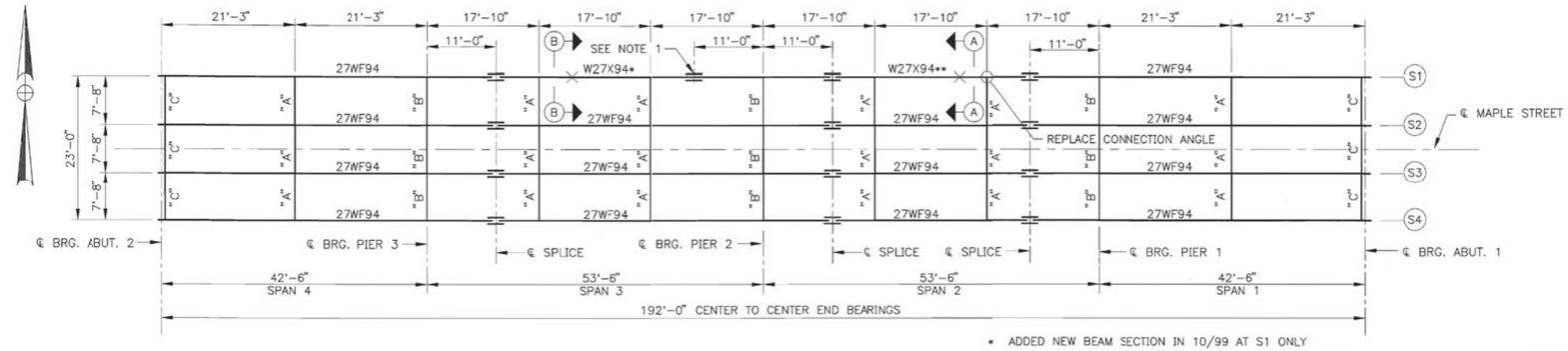

* ADDED NEW BEAM SECTION IN 10/99 AT S1 ONLY

** ADDED NEW W27x94 BEAM SECTION IN 6/00 AT S1 ONLY

× POINT OF IMPACT

FRAMING PLAN

1"=10'

BEARING REACTION TABLE (KIPS)	
STRINGER S1 & S4	
LOCATION	DEAD LOAD
ABUT. 2 OR 1	16.1
PIER 3 OR 1	54.4
PIER 2	54.9
STRINGER S2 & S3	
ABUT. 2 OR 1	16.1
PIER 3 OR 1	54.4
PIER 2	54.9

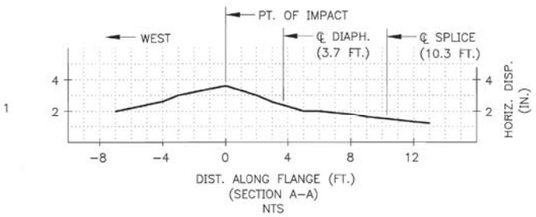

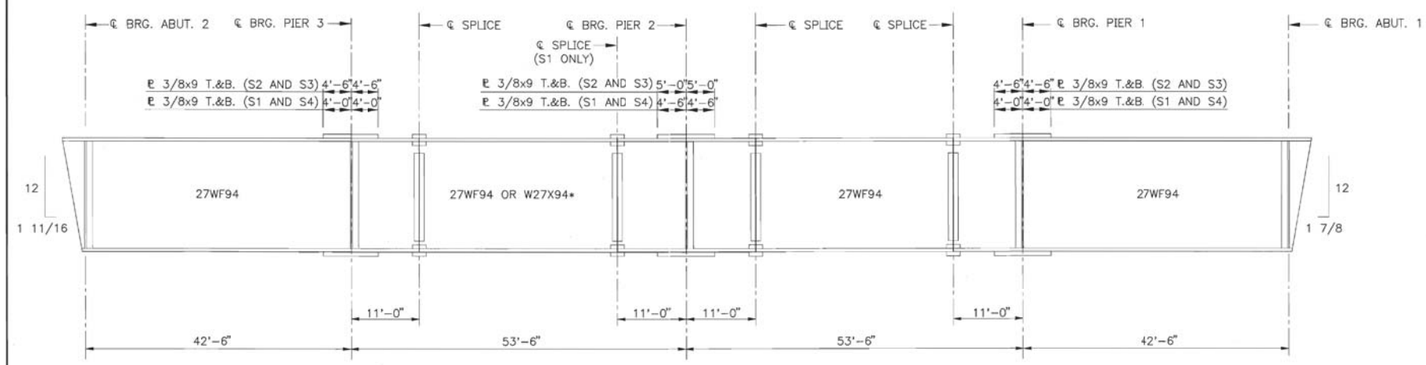

STRINGER ELEVATION

1"=10'-0" (HORIZONTAL)

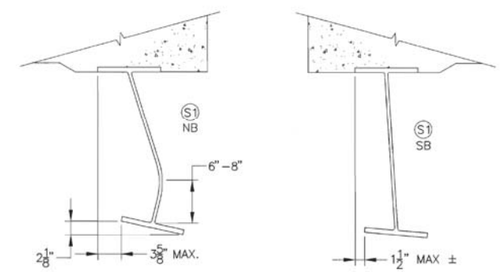

SECTION A-A

NTS

SECTION B-B

NTS

DIAPHRAGM TYPE A

3/4"=1'-0"

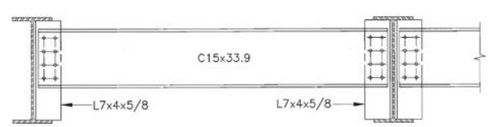

DIAPHRAGM TYPE B

3/4"=1'-0"

DIAPHRAGM TYPE C

3/4"=1'-0"

NOTES

1. SPLICE ADDED 10/99 AT S1 ONLY.
2. ALL COVER PLATES SHOWN ARE EXISTING.
3. ANY EXISTING STEEL MEMBER DAMAGED DURING THE JACKING OPERATION, SHALL BE REPAIRED BY THE CONTRACTOR AT THEIR OWN EXPENSE.
4. FOR STRAIGHTENING OF BEAMS, REFER TO SPECIAL PROVISIONS SECTION 504.

Scale: AS NOTED

No.	Revision	By	Date

Designed by: HNTB ARCHITECTS ENGINEERS PLANNERS

	By	Date		By	Date
Designed	AD	3/00	Checked	ML	3/00
Drawn	LS	3/00	In Charge of	RAL	3/00

HNTB CORPORATION
2 Thomas Drive
Westbrook, ME 04092

MAINE TURNPIKE AUTHORITY
MODERNIZATION AND WIDENING PROJECT

MAINE TURNPIKE Trans pass

BRIDGE REPAIR
MAPLE STREET UNDERPASS

FRAMING PLAN AND STRINGER ELEVATION

SHEET NUMBER: MS-5

CONTRACT: 2001.13

23 OF 53

M:\09009\2000 BRIDGES\MAPLE\STR\S1FRMMS2.DWG 01/15/01 12:24

Date:12/31/2015

Scale: NOT TO SCALE

No.	Revision	By	Date

Designed by: vhb

CONSULTANT PROJECT MANAGER: T. Bryant

	By	Date		By	Date
Designed	MED	12/2015	Checked	GME	12/2015
Drawn	KDW	12/2015	In Charge of	TSB	12/2015

VANASSE HANGEN BRUSTLIN, INC.
500 Southborough Dr.
Suite 105B
South Portland, ME 04106
TEL (207) 889-3150
FAX (207) 253-5596

MAINE TURNPIKE

THE GOLD STAR MEMORIAL HIGHWAY

MTA PROJECT MANAGER: Ralph Norwood, IV

SUPERSTRUCTURE REPLACEMENT
MAPLE STREET UNDERPASS

AS-BUILTS AND STANDARD DETAILS

VHB: 55068.00

SHEET NUMBER: 68

CONTRACT: 2016.04

68 OF 70

Filename: ...\st\planset\068_Asbuilt_10.dgn

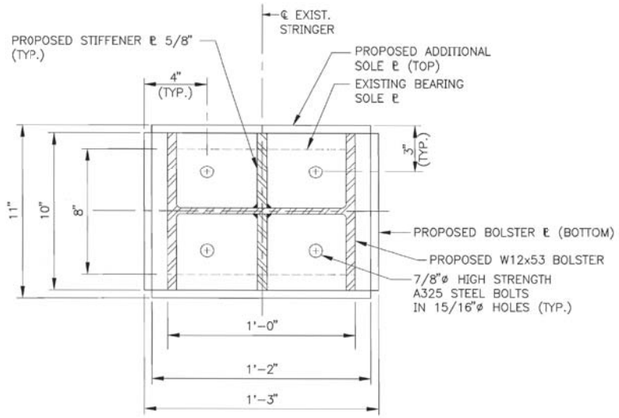

PLAN

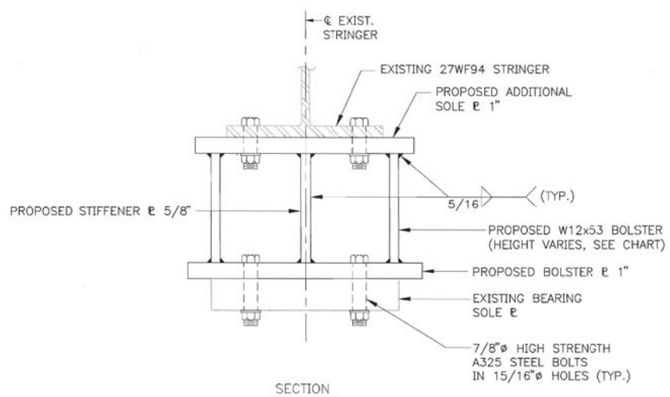

SECTION

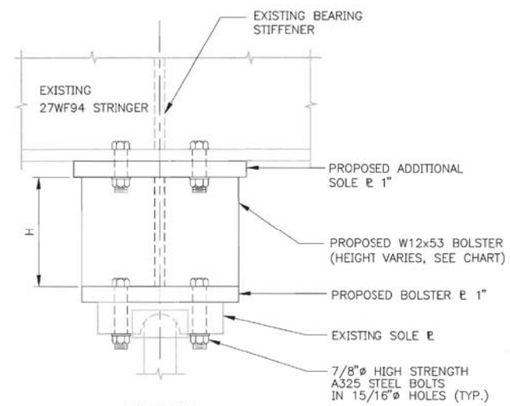

ELEVATION

BOLSTER DETAILS

3" = 1'-0"

BOLSTER HEIGHTS	
LOCATION	H (INCHES)
ABUTMENT 2	7
PIER 3	8
PIER 2	8
PIER 1	7
ABUTMENT 1	6 1/2

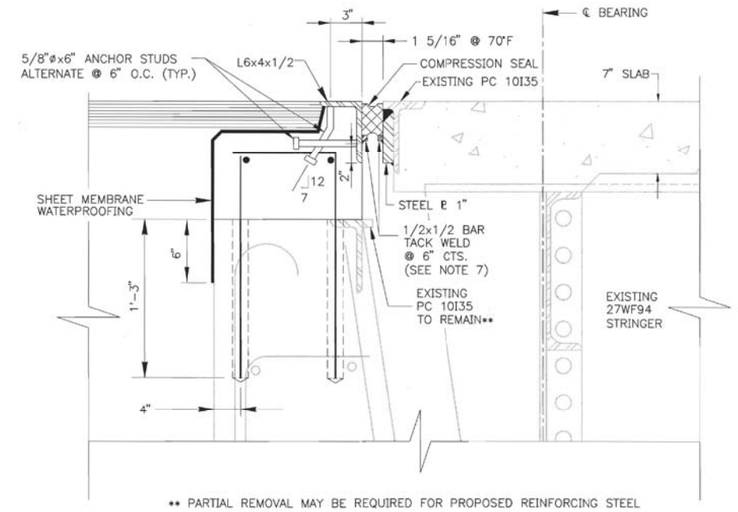

** PARTIAL REMOVAL MAY BE REQUIRED FOR PROPOSED REINFORCING STEEL

SECTION THROUGH JOINT

2" = 1'-0"

NOTES

1. CONTRACTOR SHALL FIELD VERIFY LOCATION AND SPACING OF SOLE PLATE HOLES PRIOR TO BOLSTER FABRICATION.
2. ALL PROPOSED STRUCTURAL STEEL SHALL BE AASHTO M270, GRADE 36.
3. SHOP DRAWINGS OF THE PROPOSED BOLSTER AND PLATES SHALL BE SUBMITTED TO THE ENGINEER FOR APPROVAL.
4. ALL EXPOSED SURFACES OF PROPOSED BOLSTER AND PLATES SHALL BE MECHANICALLY CLEANED AND SHOP PAINTED WITH ONE COAT OF ZRC PAINT. PAYMENT SHALL BE INCIDENTAL TO ITEM 504.7011.
5. ALL SHIM PLATES, WHICH ARE NECESSARY, SHALL BE INCIDENTAL TO ITEM 504.7011.
6. THE 7/8"ø, A325, BOLTS SHALL BE INCIDENTAL TO ITEM 504.7011.
7. THE LOCATION FOR THE 1/2x1/2 BARS SHALL BE SET TO A DEPTH EQUAL TO COMPRESSION SEAL HEIGHT PLUS 1/4 INCH.

Scale: AS NOTED

No.	Revision	By	Date

Designed by:

HNTB
ARCHITECTS ENGINEERS PLANNERS

	By	Date		By	Date
Designed	ML	3/00	Checked	AD	3/00
Drawn	LS	3/00	In Charge of	FAL	3/00

HNTB CORPORATION
2 Thomas Drive
Westbrook, ME 04092
TEL (207) 774-5155
FAX (207) 772-7410

MAINE TURNPIKE AUTHORITY

MAINE TURNPIKE Trans pass

BRIDGE REPAIR
MAPLE STREET UNDERPASS

MISCELLANEOUS DETAILS

SHEET NUMBER: MS-6
CONTRACT: 2001.13
24 OF 53

Scale: NOT TO SCALE

No.	Revision	By	Date

Designed by:

vhb

CONSULTANT PROJECT MANAGER: T. Bryant

	By	Date		By	Date
Designed	MED	12/2015	Checked	GME	12/2015
Drawn	KDW	12/2015	In Charge of	TSB	12/2015

VANASSE HANGEN BRUSTLIN, INC.
500 Southborough Dr.
Suite 105B
South Portland, ME 04106
TEL (207) 889-3150
FAX (207) 253-5596

MAINE TURNPIKE

THE GOLD STAR MEMORIAL HIGHWAY

MTA PROJECT MANAGER: Ralph Norwood, IV

SUPERSTRUCTURE REPLACEMENT
MAPLE STREET UNDERPASS

AS-BUILTS AND STANDARD DETAILS

VHB: 55068.00
CONTRACT: 2016.04
SHEET NUMBER: 69
69 OF 70

Date:12/31/2015
M:\09009\2000 BRIDGES\MAPLE\STR\S5MSCMS.DWG 03/21/00 15:30
Filename: ...\st\planset\069_Asbuilt_11.dgn

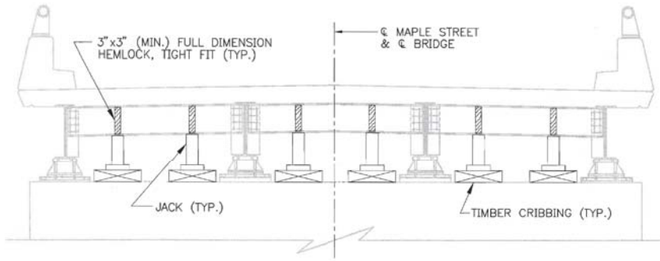

TYPICAL SECTION AT ABUTMENTS
N.T.S.

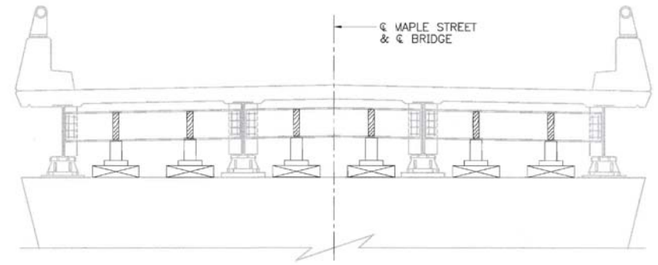

TYPICAL SECTION AT PIERS
N.T.S.

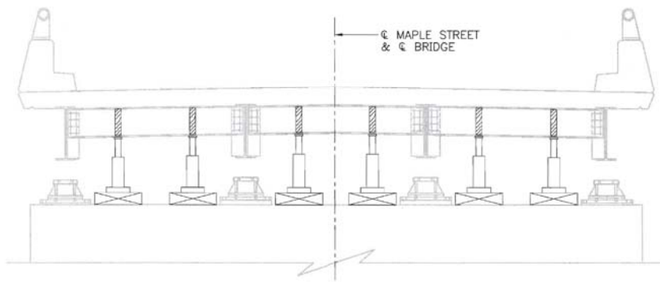

TYPICAL SECTION AT ABUTMENTS
N.T.S.

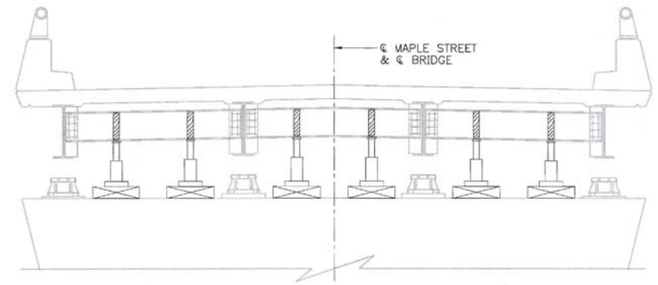

TYPICAL SECTION AT PIERS
N.T.S.

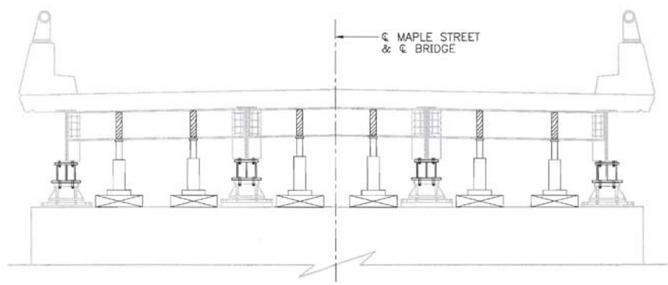

TYPICAL SECTION AT ABUTMENTS
N.T.S.

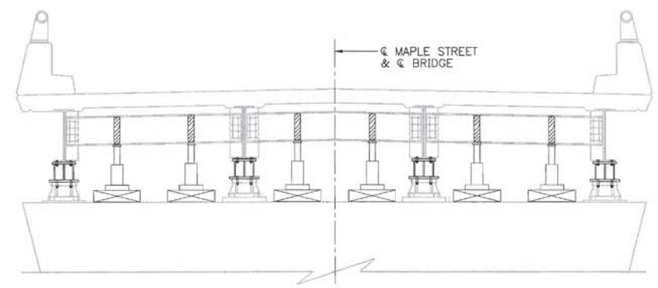

TYPICAL SECTION AT PIERS
N.T.S.

NOTES

1. ALL EXISTING DIMENSIONS AND INFORMATION SHOWN ON THE PLANS ARE BASED ON AS-BUILT AND STANDARD DETAIL DRAWINGS. THE CONTRACTOR SHALL FIELD VERIFY ALL DIMENSIONS PRIOR TO SUBMISSION OF SHOP DRAWINGS.
2. SEE SHEET NO. MS-5 FOR FRAMING PLAN, SHEET NO. MS-7 FOR JACKING INFORMATION, AND SHEET NO. MS-6 FOR BOLSTER DETAILS.
3. REMOVAL OF THE EXISTING SOLE PLATE AND RIVETS AT THE INTERFACE OF THE EXISTING STRINGER SHALL BE BY MECHANICAL METHODS ONLY.

TEMPORARY SUPPORT AND JACKING SYSTEM NOTES

1. THE TEMPORARY SUPPORT AND JACKING SYSTEM SHALL BE DESIGNED BY THE CONTRACTOR. THE CONTRACTOR SHALL SUBMIT A COMPLETE SET OF DESIGN CALCULATIONS AND DRAWINGS FOR THE TEMPORARY SUPPORT, JACKING SYSTEM AND BEARING MODIFICATION PROCEDURE. THE CALCULATIONS AND DRAWINGS SHALL BE STAMPED BY A PROFESSIONAL ENGINEER, REGISTERED IN MAINE. SEE SPECIAL PROVISION FOR ADDITIONAL REQUIREMENTS.
2. THE TEMPORARY SUPPORT AND JACKING SYSTEM ARRANGEMENT SHOWN IS SCHEMATIC AND SUGGESTED ONLY. THE CONTRACTOR'S DESIGN MAY INCLUDE ALTERNATIVE SUPPORT AND JACKING LOCATIONS.
3. TEMPORARY SUPPORT AND JACKING LOADS SHALL BE BASED ON THE SUPPORT REACTIONS SHOWN ON SHEET NO. MS-5.
4. JACKS MUST BE HYDRAULIC TYPES WITH A MINIMUM STROKE OF 12 INCHES AND THE MINIMUM RATED CAPACITY PER JACK TO BE 15 TONS AT ABUTMENTS AND 30 TONS AT PIERS. A TOTAL OF SIX JACKS ARE REQUIRED AT EACH SUBSTRUCTURE UNIT.
5. JACKS SHALL BE SYNCHRONIZED TO INSURE EQUAL DISPLACEMENT OF ALL PISTONS SO THAT ALL SPANS MAY BE RAISED UNIFORMLY.
6. RIGID VERTICAL SUPPORT OF SUPERSTRUCTURE IN THE JACKED POSITION SHALL BE PROVIDED BY LOCKING THE JACK RAMS OR BY FURNISHING AND INSTALLING AN INDEPENDENT SUPPORT SYSTEM. EXCEPT FOR DURING JACKING OPERATIONS, THE SUPERSTRUCTURE SHALL NOT BE HYDRAULICALLY SUPPORTED.

SUGGESTED TEMPORARY SUPPORT, JACKING AND BOLSTER INSTALLATION PROCEDURES:

1. FIELD MEASURE ALL PROPOSED BOLSTER LOCATIONS.
2. FURNISH AND INSTALL TEMPORARY SUPPORT AND JACKING SYSTEM.
3. REMOVE EXISTING RIVETS, BOLTS AND/OR WELDS THAT CONNECT THE SOLE PLATE TO THE STRINGER.
4. CLOSE BRIDGE TO ALL TRAFFIC. JACK THE EXISTING SUPERSTRUCTURE A MINIMUM OF 12 INCHES. PROVIDE BRACING TO MAINTAIN THE SUPERSTRUCTURE IN A STABLE CONDITION DURING THE JACKING OPERATION.
5. SUPPORT SUPERSTRUCTURE IN JACKED POSITION BY LOCKING THE JACK RAMS OR BY FURNISHING AND INSTALLING AN INDEPENDENT TEMPORARY SUPPORT SYSTEM.
6. THOROUGHLY CLEAN EXISTING BEARING SOLE PLATES AND BOTTOM FLANGES OF STRINGERS AT BEARING AREA AS PER SPECIFICATIONS. WELD AND GRIND CORRODED AREAS AS REQUIRED TO PROVIDE A SMOOTH SURFACE.
7. FURNISH AND INSTALL PROPOSED BOLSTER AND SHIM PLATES. SHIM PLATES SHALL BE GALVANIZED AND 1/8 INCH THICK FOR LEVELING PURPOSES ONLY AT THE PROPOSED BOLSTER LOCATIONS. SHIM AS NECESSARY TO ENGAGE THE SUPERSTRUCTURE LOAD AND PROVIDE DIRECT CONTACT BETWEEN STRINGER AND BOLSTER ASSEMBLY.
8. JACK (HYDRAULICALLY SUPPORT) BRIDGE AND REMOVE TEMPORARY VERTICAL SUPPORTS (BLOCKING OR RAM LOCKS) IN PREPARATION FOR SUPERSTRUCTURE LOWERING.
9. SLOWLY RELEASE JACKS AND LOWER SUPERSTRUCTURE ONTO NEW BOLSTER/BEARING ASSEMBLY. REPLACE RIVETS AT STRINGER AND SOLE PLATE INTERFACE WITH A325 HIGH STRENGTH STEEL BOLTS.
10. REMOVE TEMPORARY JACKING SYSTEM.

Scale: AS NOTED

No.	Revision	By	Date

Designed by: HNTB ARCHITECTS ENGINEERS PLANNERS

	By	Date		By	Date
Designed	AD	3/00	Checked	ML	3/00
Drawn	LS	3/00	In Charge of	RAL	3/00

HNTB CORPORATION
2 Thomas Drive
Westbrook, ME 04092
TEL (207) 774-5155
FAX (207) 772-7410

MAINE TURNPIKE AUTHORITY
MAINE TURNPIKE Trans pass

BRIDGE REPAIR
MAPLE STREET UNDERPASS

SEQUENCE OF CONSTRUCTION

SHEET NUMBER: MS-7
CONTRACT: 2001.13
25 OF 53

Scale: NOT TO SCALE

No.	Revision	By	Date

Designed by: vhb

CONSULTANT PROJECT MANAGER: T. Bryant

	By	Date		By	Date
Designed	MED	12/2015	Checked	GME	12/2015
Drawn	KDW	12/2015	In Charge of	TSB	12/2015

VANASSE HANGEN BRUSTLIN, INC.
500 Southborough Dr.
Suite 105B
South Portland, ME 04106
TEL (207) 889-3150
FAX (207) 253-5596

MAINE TURNPIKE

THE GOLD STAR MEMORIAL HIGHWAY

MTA PROJECT MANAGER: Ralph Norwood, IV

SUPERSTRUCTURE REPLACEMENT
MAPLE STREET UNDERPASS

AS-BUILTS AND STANDARD DETAILS

VHB: 55068.00
SHEET NUMBER: 70
CONTRACT: 2016.04
70 OF 70

Date: 12/31/2015
M:\09009\2000 BRIDGES\MAPLE\STR\S3SEQ2MS.DWG 03/21/00 15:31
Filename: ...\st\planset\070_Asbuilt_12.dgn