CONTRACT DOCUMENTS

CONTRACT 2015.13

FALMOUTH SPUR TOLL PLAZA
OPEN ROAD TOLLING CONVERSION
(MM F2.8)

MAINE TURNPIKE AUTHORITY

SPECIFICATIONS

The Specifications are divided into two parts:
Part I, General Provisions and Part II, Special Provisions.

The Maine Turnpike General Provisions and Special Provisions are additions and alterations to the Maine Department of Transportation Standard Specifications **Revision of December 2002**.

TABLE OF CONTENTS

	PAGE
NOTICE TO CONTRACTORS	N-1
PROPOSAL	P-1
CONTRACT AGREEMENT	C-1
CONTRACT BOND	CB-1
FINAL LIEN AND CLAIM WAIVER AND AFFIDAVIT	F-1

ARRANGEMENT OF SPECIFICATIONS

PART I - GENERAL PROVISIONS	GP-1
PART II - SPECIAL PROVISIONS	SP-1
PART III - APPENDICES (Part of Special Provisions)	AP-1

PART I - GENERAL PROVISIONS

SECTION	TITLE	PAGE
100	GENERAL PROVISIONS	
100.1	REPLACEMENT OF FORMER STANDARD SPECIFICATIONS AND DETAILS	GP-1
101	CONTRACT INTERPRETATION	
101.2	DEFINITIONS	GP-1
102	BIDDING	
102.1.1	BASIC REQUIREMENTS	GP-2
102.6	BID GUARANTY	GP-3
102.7.1	LOCATION AND TIME	GP-3
102.7.2	EFFECTS OF SIGNING AND DELIVERY OF BIDS	GP-3

PART I - GENERAL PROVISIONS - Continued

SECTION	TITLE	PAGE
103	AWARD AND CONTRACTING	
103.3.1	NOTICE AND INFORMATION GATHERING	GP-3
103.3.2	NOTICE OF DETERMINATION	GP-3
103.3.3	APPEAL	GP-4
103.4	NOTICE OF AWARD	GP-4
103.5.4	EXECUTION OF CONTRACT BY BIDDER	GP-4
103.8	EXECUTION OF CONTRACT BY DEPARTMENT	GP-5
104	GENERAL RIGHTS AND RESPONSIBILITIES	
104.2.1	FURNISHING OF RIGHT-OF-WAY	GP-5
104.2.3	AUTHORITY OF PROJECT MANAGER AND RESIDENT	GP-5
104.3.5	DUTIES REGARDING INSPECTION OF WORK	GP-5
104.3.7	LAWS TO BE OBSERVED	GP-6
104.3.8	WAGE RATES AND LABOR LAWS	GP-6
104.3.11	RESPONSIBILITY FOR PROPERTY OF OTHERS	GP-7
104.3.14	INTERPRETATION AND INTERPOLATION	GP-7
104.4.2	PRECONSTRUCTION CONFERENCE	GP-7
104.4.5	EARLY NEGOTIATION	GP-8
104.4.7	COOPERATION WITH OTHER CONTRACTORS	GP-8
104.4.10	COORDINATION OF BRIDGE CLOSURE/BRIDGE WIDTH RESTRICTION NOTIFICATION	GP-9
104.5.9	LANDSCAPE SUBCONTRACTORS	GP-9
105	GENERAL SCOPE OF WORK	
105.1	INTENT OF THE CONTRACT	GP-9

SECTION	TITLE	PAGE
105.2.3	JOINT DUTY REGARDING SAFETY	GP-10
105.2.4.1	LOCKOUT/TAGOUT PROCEDURES	GP-10
105.4.1	MAINTENANCE DURING CONSTRUCTION	GP-10
105.4.3	MAINTENANCE DURING WINTER CONSTRUCTION	GP-11
105.5.1	GENERAL REQUIREMENTS	GP-11
105.6	CONSTRUCTION SURVEYING	GP-13
105.6.1	AUTHORITY PROVIDED SERVICES	GP-13
105.6.2	CONTRACTOR PROVIDED SERVICES	GP-13
105.6.2.1	QUALITY CONTROL	GP-13
105.6.3	QUALITY ASSURANCE	GP-13
105.6.4	BOUNDARY MARKERS	GP-14
105.7.1	GENERAL	GP-14
105.7.4	SUBMITTAL REQUIREMENTS	GP-15
105.8.1	TEMPORARY SOIL EROSION AND WATER POLLUTION CONTROL	GP-15
105.10	EQUAL OPPORTUNITY AND CIVIL RIGHTS	GP-16
105.10.1	REQUIREMENTS APPLICABLE TO FEDERALLY FUNDED CONTRACTS	GP-16
105.10.2	REQUIREMENTS APPLICABLE TO ALL CONTRACTS	GP-16
105.11	OTHER FEDERAL REQUIREMENTS	GP-17
105.12	LIMITATIONS OF OPERATIONS	GP-17
106	QUALITY	
106.3.3	SOURCES	GP-18
106.3.4	STORAGE	GP-18

SECTION	TITLE	PAGE
106.3.7	SAMPLING AND TESTING	GP-18
106.6	ACCEPTANCE	GP-18
106.8.3	UNAUTHORIZED WORK	GP-18
107	TIME	
107.1.1	SUBSTANTIAL COMPLETION	GP-19
107.3.1	GENERAL	GP-19
107.3.2	NIGHT WORK	GP-19
107.3.3	SUNDAYS AND HOLIDAYS	GP-20
107.4.2	SCHEDULE OF WORK REQUIRED	GP-20
107.4.4	SCHEDULE REVISIONS	GP-20
107.7.2	SCHEDULE OF LIQUIDATED DAMAGES	GP-20
107.9.1	FINAL CLEAN-UP AND FINISHING	GP-21
108	PAYMENT	
108.1	MEASUREMENT OF QUANTITIES FOR PAYMENT	GP-21
108.1.2	GENERAL MEASUREMENT PROVISIONS	GP-21
108.1.3	PROVISIONS RELATING TO CERTAIN MEASUREMENTS	GP-21
108.2.1	GENERATION OF PROGRESS PAYMENT ESTIMATES	GP-21
108.2.2	PAYMENT	GP-22
108.2.3	MOBILIZATION PAYMENTS	GP-22
108.3	RETAINAGE	GP-22
108.4	PAYMENT FOR MATERIALS OBTAINED AND STORED	GP-23
108.4.1	PRICE ADJUSTMENT FOR HOT MIX ASPHALT	GP-23
108.5	RIGHT TO WITHHOLD PAYMENT	GP-23

PART I - GENERAL PROVISIONS - Continued

SECTION	TITLE	PAGE
108.6	TAXES, FEES, ALLOWANCES, AND NOTICES	GP-24
108.8	FINAL PAYMENT	GP-24
109	CHANGES	
109.1.1	CHANGES PERMITTED	GP-24
109.1.2	SUBSTANTIAL CHANGES TO MAJOR ITEMS	GP-24
109.3	EXTRA WORK	GP-24
109.4	DIFFERING SITE CONDITIONS	GP-25
109.4.1	DEFINITION	GP-25
109.4.4	INVESTIGATION / ADJUSTMENT	GP-25
109.5.1	DEFINITIONS – TYPES OF DELAYS	GP-25
109.5.2	ENTITLEMENT TO ADJUSTMENTS	GP-25
109.5.5	DOCUMENTING THE DELAY AND REQUEST FOR ADJUSTMENTS	GP-26
109.5.6	DECISION BY PROGRAM MANAGER	GP-26
109.5.7	ADDITIONAL CONSIDERATION BY DEPARTMENT	GP-26
109.6.1	OVERVIEW – GENERAL REQUIREMENTS	GP-26
109.7.2	BASIS OF PAYMENT	GP-26
109.7.3	COMPENSABLE ITEMS	GP-26
109.7.5	FORCE ACCOUNT WORK	GP-27
110	INDEMNIFICATIONS, BONDING AND INSURANCE	
110.2.1	BONDS	GP-27
110.2.3	BONDING FOR LANDSCAPE SUBCONTRACTORS	GP-28
110.2.3	BONDING FOR LANDSCAPE ESTABLISHMENT PERIOD	GP-28

PART I - GENERAL PROVISIONS - Continued

SECTION	TITLE	PAGE
110.3	INSURANCE	GP-29
110.3.05	UMBRELLA LIABILITY	GP-29
110.3.2	COMMERCIAL GENERAL LIABILITY	GP-29
110.3.4	PROFESSIONAL LIABILITY	GP-29
110.3.5	OWNER'S AND CONTRACTOR'S PROTECTIVE LIABILITY	GP-30
110.3.6	BUILDER'S RISK INSURANCE	GP-30
110.3.8	ADMINISTRATIVE AND GENERAL PROVISIONS	GP-30
111	RESOLUTION OF DISPUTES	
111.1.2	ESCALATION PROCESS	GP-30
111.1.8	COMMISSIONER COMMUNICATIONS BEFORE APPEAL	GP-31
111.2	PROJECT LEVEL NEGOTIATION TO 111.6 JUDICIAL REVIEW	GP-31
112	DEFAULT AND TERMINATION	
112.2	TERMINATION	GP-31
203	EXCAVATION AND EMBANKMENT	
203.01	DESCRIPTION	GP-32
203.18	METHOD OF MEASUREMENT	GP-32
502	STRUCTURAL CONCRETE	
502.10	FORMS AND FALSE WORK	GP-32
502.11	PLACING CONCRETE	GP-32
502.15	CURING CONCRETE	GP-32
503	REINFORCING STEEL	
503.06	PLACING AND FASTENING	GP-33

SECTION	TITLE	PAGE
504	STRUCTURAL STEEL	
504.09	FACILITIES FOR INSPECTION	GP-33
504.18	PLATES FOR FABRICATED MEMBERS	GP-33
504.31	SHOP ASSEMBLY	GP-33
535	PRECAST, PRESTRESSED CONCRETE SUPERSTRUCTURE	
535.02	MATERIALS	GP-34
535.05	INSPECTION FACILITIES	GP-34
535.26	LATERAL POST-TENSIONING	GP-34
603	PIPE CULVERTS AND STORMDRAINS	
603.0311	CORRUGATED POLYETHYLENE PIPE FOR OPTION III	GP-34
604	MANHOLES, INLETS, AND CATCH BASINS	
604.02	MATERIALS	GP-34
605	UNDERDRAINS	
605.05	UNDERDRAIN OUTLETS	GP-35
606	GUARDRAIL	
606.02	MATERIALS	GP-35
606.09	BASIS OF PAYMENT	GP-35
615	LOAM	
615.02	MATERIALS	GP-35
618	SEEDING	
618.01	DESCRIPTION	GP-36
618.03	RATES OF APPLICATION	GP-36
618.09	CONSTRUCTION METHOD	GP-36

SECTION	TITLE	PAGE
618.15	TEMPORARY SEEDING	GP-36
620	GEOTEXTILES	
620.03	PLACEMENT	GP-36
620.07	SHIPMENT, STORAGE, PROTECTION AND REPAIR OF FABRIC	GP-36
620.09	BASIS OF PAYMENT	GP-36
621	LANDSCAPING	
621.0036	ESTABLISHMENT PERIOD	GP-37
626	HIGHWAY SIGNING	
626.034	CONCRETE FOUNDATIONS	GP-37
639	ENGINEERING FACILITIES	
639.04	FIELD OFFICES	GP-37
639.09	TELEPHONE	GP-37
639.11	BASIS OF PAYMENT	GP-38
652	MAINTENANCE OF TRAFFIC	
652.2	MATERIALS	GP-38
652.2.4	OTHER DEVICES	GP-38
652.2.5	SAFETY VESTS	GP-38
652.3.1	RESPONSIBILITY OF THE DEPARTMENT	GP-38
652.3.2	RESPONSIBILITY OF THE CONTRACTOR	GP-39
652.3.3	SUBMITTAL OF TRAFFIC CONTROL PLAN	GP-39
652.3.4	GENERAL	GP-39
652.3.41	LOCAL ROAD GENERAL REQUIREMENTS	GP-40

SECTION	TITLE	PAGE
652.3.5	INSTALLATION OF TRAFFIC CONTROL DEVICES	GP-41
652.3.6	TRAFFIC CONTROL	GP-42
652.41	TRAFFIC OFFICERS	GP-42
652.6	NIGHT WORK	GP-42
652.61	CONSTRUCTION VEHICLES	GP-42
652.7	METHOD OF MEASUREMENT	GP-42
652.8.2	OTHER ITEMS	GP-43
653	POLYSTYRENE PLASTIC INSULATION	
653.05	PLACING BACKFILL	GP-43
653.06	COMPACTION	GP-43
656	TEMPORARY SOIL EROSION AND WATER POLLUTION CONTROL	
656.01	DESCRIPTION	GP-43
656.02	GENERAL	GP-44
656.03	SILT FENCE	GP-44
656.04	TEMPORARY EROSION CHECKS	GP-45
656.041	EROSION CONTROL FILTER BERM	GP-45
656.05	TEMPORARY BERMS	GP-45
656.06	TEMPORARY SLOPE DRAINS	GP-45
656.07	DUMPED STONE	GP-45
656.08	SILT FENCE	GP-46
656.081	BOOM SUPPORTED FLOATING SILT FENCE	GP-46
656.082	MAINTENANCE	GP-46

SECTION	TITLE	PAGE
656.085	EROSION CONTROL COMPLIANCE OFFICER	GP-46
656.09	REMOVING AND DISPOSING	GP-47
656.10	METHOD OF MEASUREMENT	GP-47
656.11	BASIS OF PAYMENT	GP-47
701	STRUCTURAL CONCRETE RELATED MATERIALS	
701.10	FLY ASH – CHEMICAL REQUIREMENTS	GP-48
703	AGGREGATES	
703.06	AGGREGATE FOR BASE AND SUBBASE	GP-48
703.22	UNDERDRAIN BACKFILL MATERIAL	GP-49
706	NON-METALLIC PIPE	
706.06	CORRUGATED POLYETHYLENE PIPE FOR UNDERDRAIN, OPTION I AND OPTION II IN CULVERT PIPE	GP-49
709	REINFORCING STEEL AND WELDED STEEL WIRE FABRIC	
709.03	STEEL STRAND	GP-49
712	MISCELLANEOUS HIGHWAY MATERIALS	
712.07	TOPS AND TRAPS	GP-49
712.08	CORRUGATED METAL UNITS	GP-49
712.09	CATCH BASIN AND MANHOLE STEPS	GP-50
712.23	FLASHING LIGHTS	GP-50
712.32	COPPER TUBING	GP-51
712.33	NON-METALLIC PIPE, FLEXIBLE	GP-51
712.34	NON-METALLIC PIPE, RIGID	GP-51
712.341	METALLIC PIPE	GP-51

SECTION	TITLE	PAGE
712.35	EPOXY RESIN	GP-51
712.36	BITUMINOUS CURB	GP-52
712.37	PRECAST CONCRETE SLAB	GP-52
712.38	STONE SLAB	GP-52
717	ROADSIDE IMPROVEMENT MATERIAL	
717.03	C. METHOD #3 – ROADSIDE MIXTURE #3	GP-52
717.05	MULCH BINDER	GP-53

PART II – SPECIAL PROVISIONS

SECTION	TITLE	PAGE
__	GENERAL DESCRIPTION OF WORK	SP-1
__	PLANS	SP-1
101.2	DEFINITION	SP-1
102.11.2	CURABLE BID DEFECTS	SP-2
103.4	NOTICE OF AWARD	SP-2
104.2.2	FURNISHING OF PERMITS	SP-2
104.3.8	WAGE RATES AND LABOR LAWS	SP-2
104.4.4	REQUEST FOR INFORMATION (RFI)	SP-6
104.4.6	UTILITY COORDINATION	SP-6
104.4.7	COOPERATION WITH OTHER CONTRACTORS	SP-7
105.2.4.2	LEAD PAINT	SP-8
105.2.4.3	ASBESTOS	SP-10
105.2.4.4	UNIVERSAL WASTE	SP-11
105.2.6	USE OF EXPLOSIVES	SP-11
105.3	TRAFFIC CONTROL AND MANAGEMENT	SP-19
105.4.3	MAINTENANCE DURING WINTER CONSTRUCTION	SP-19
105.5.1	GENERAL REQUIREMENTS	SP-20
105.7.4	SUBMITTAL REQUIREMENTS	SP-20
105.8.1	TEMPORARY SOIL EROSION AND WATER POLLUTION CONTROL	SP-20
105.8.1.1	ENVIRONMENTAL STANDARDS	SP-22
105.8.1.11	WATER POLLUTION CONTROL REQUIREMENTS	SP-22
105.8.1.12	CONSTRUCTION REQUIREMENTS	SP-23
105.8.2	PERMIT REQUIREMENTS	SP-24

PART II – SPECIAL PROVISIONS - Continued

SECTION	TITLE	PAGE
107.1	CONTRACT TIME AND CONTRACT COMPLETION DATE	SP-25
107.1.1	SUBSTANTIAL COMPLETION	SP-26
107.3.2	NIGHT WORK	SP-26
107.4.2	SCHEDULE OF WORK REQUIRED	SP-26
107.4.6	PROSECUTION OF WORK	SP-27
107.4.7	LIMITATIONS OF OPERATIONS	SP-28
107.4.9	FAILURE TO STOP WORK WHEN DIRECTED	SP-29
107.7.2	SCHEDULE OF LIQUIDATED DAMAGES	SP-29
108.4	PAYMENT FOR MATERIALS OBTAINED AND STORED	SP-30
108.4.1	PRICE ADJUSTMENT FOR HOT MIX ASPHALT	SP-31
109.7.3	COMPENSABLE ITEMS	SP-31
201.	CLEARING RIGHT-OF-WAY (Clearing)	SP-32
202.	REMOVING STRUCTURES AND OBSTRUCTIONS (Removing Asbestos Containing Materials)	SP-34
202.	REMOVING STRUCTURES AND OBSTRUCTIONS (Removing Existing Manholes or Catch Basins)	SP-36
202.	REMOVING STRUCTURES AND OBSTRUCTIONS (Removing Existing Structural Concrete)	SP-37
202.	REMOVING STRUCTURES AND OBSTRUCTIONS (Removing Pavement Surface)	SP-38
202.	REMOVING STRUCTURES AND OBSTRUCTIONS (Removing Rumble Strips)	SP-39
203.	EXCAVATION AND EMBANKMENT (Rock Excavation)	SP-41
203.	EXCAVATION AND EMBANKMENT	SP-42

PART II – SPECIAL PROVISIONS - Continued

SECTION	TITLE	PAGE
203.	EXCAVATION AND EMBANKMENT (Presplitting Rock/Cushion Blasting) (Drilling and Blasting of Solid Rock Subgrade)	SP-44
203.	EXCAVATION AND EMBANKMENT (Common Borrow, Truck Measure)	SP-47
205.	SHOULDER RECONSTRUCTION (Widening of Existing Shoulder)	SP-48
206.	STRUCTURAL EXCAVATION	SP-50
401.	HOT MIX ASPHALT PAVEMENTS	SP-52
403.	HOT BITUMINOUS PAVEMENT	SP-73
403.	HOT BITUMINOUS PAVEMENT (Hot Mix Asphalt, 12.5 mm (Polymer Modified))	SP-75
409.	BITUMINOUS TACK COAT	SP-77
419.	SAWING AND SEALING JOINTS IN BITUMINOUS PAVEMENT (Sawing Bituminous Pavement)	SP-78
424.	CRACK SEAL	SP-79
502.	STRUCTURAL CONCRETE (Structural Concrete, Space Frame Pedestals) (Structural Concrete, Space Frame Foundations) (Structural Concrete, Canopy Column Foundations) (Structural Concrete, ORT Slabs) (Structural Concrete, Pavement Slabs) (Structural Concrete, Plaza Islands, Bumpers, and Curtains Walls)	SP-82
503.	REINFORCING STEEL (GFRP Reinforcing)	SP-112
503.	REINFORCING STEEL (Synthetic Fiber Reinforcement)	SP-116
504.	STRUCTURAL STEEL (Space Frame Canopy, Fabricated and Delivered) (Space Frame Canopy, Erection)	SP-117

SECTION	TITLE	PAGE
	(Steel Post Support System)	
504.	STRUCTURAL STEEL (Mounting Bracket Assemblies)	SP-122
504.	STRUCTURAL STEEL (Metal Stairs)	SP-124
506.	FIELD COATING APPLICATION	SP-128
506.	SHOP COATING APPLICATION	SP-143
508.	MEMBRANE WATERPROOFING	SP-151
511.	COFFERDAMS (Temporary Earth Support Systems)	SP-152
515.	PROTECTIVE COATING FOR CONCRETE SURFACES (Pigmented Concrete Protective Coating)	SP-157
515.	PROTECTIVE COATING FOR CONCRETE SURFACES (Pigmented Concrete Protective Coating – Tunnel Walls and Ceiling) (Pigmented Concrete Protective Coating – Tunnel Floor)	SP-160
515.	PROTECTIVE COATING FOR CONCRETE SURFACES (Clear Concrete Protective Coating)	SP-163
515.	PROTECTIVE COATING FOR CONCRETE SURFACES (Epoxy Overlay)	SP-166
526.	CONCRETE BARRIER (Temporary Concrete Barrier Type I - Supplied by Authority)	SP-171
526.	CONCRETE BARRIER (Median Barrier Type I, IA, II, III) (Median Barrier Transition Type I, II)	SP-174
527.	ENERGY ABSORBING UNIT (Center Barrier Crash Attenuator (FasTRACC))	SP-178
527.	ENERGY ABSORBING UNIT (Work Zone Crash Cushion)	SP-179
535.	PRECAST, PRESTRESSED CONCRETE SUPERSTRUCTURE (Precast Concrete Tunnel)	SP-180

SECTION	TITLE	PAGE
535.	PRECAST, PRESTRESSED CONCRETE SUPERSTRUCTURE (Precast Concrete Utility Pit)	SP-187
603.	PIPE CULVERTS AND STORM DRAINS (Reinforced Concrete Pipe) (Concrete Collar)	SP-189
604.	MANHOLES, INLETS, AND CATCH BASINS (Catch Basin)	SP-190
606.	GUARDRAIL (Bridge Transition – Type III) (Bridge Transition – Type III, Modified)	SP-191
606.	GUARDRAIL (Guardrail Beam)	SP-192
606.	GUARDRAIL (Terminal End – Anchored End)	SP-193
606.	GUARDRAIL (Reflectorized Beam Guardrail Delineator)	SP-194
606.	GUARDRAIL (Delineator Post) (Remove and Reset Delineator Post)	SP-196
606.	GUARDRAIL (Guardrail – Remove, Modify and Reset)	SP-199
606.	GUARDRAIL (Guardrail – Remove, Stack and Dispose)	SP-201
606.	GUARDRAIL (Widen Shoulders for Guardrail 350 Flared Terminal)	SP-202
606.	GUARDRAIL (Guardrail 350 FLEAT Terminal)	SP-204
607.	FENCES (Chain Link Fence - 3' High) (Post Assemblies for Chain Link Fence - 3' High)	SP-206

PART II – SPECIAL PROVISIONS - Continued

SECTION	TITLE	PAGE
608.	SIDEWALKS (Curb Ramp Detectable Warning Field)	SP-207
609.	CURBING (Concrete Curb Type 2)	SP-209
610.	STONE FILL, RIPRAP, STONE BLANKET AND STONE DITCH PROTECTION (Stone Check Dams)	SP-210
619.	MULCH	SP-212
626.	FOUNDATIONS, CONDUIT AND JUNCTION BOXES FOR HIGHWAY SIGNING, LIGHTING AND SIGNALS (Precast Junction Box) (Quazite Junction Box)	SP-214
627.	PAVEMENT MARKINGS (Temporary Painted Pavement Markings)	SP-215
627.	PAVEMENT MARKINGS (Temporary Pavement Markings - Tape)	SP-217
627.	PAVEMENT MARKINGS (Temporary Pavement Markings – Black Tape)	SP-219
627.	PAVEMENT MARKINGS (Temporary Raised Pavement Markers)	SP-221
631.	EQUIPMENT RENTAL	SP-223
633.	PROPANE GAS UTILITY (Propane Service Line)	SP-225
634.	HIGHWAY LIGHTING (Remove and Reset Light Standard)	SP-226
639.	ENGINEERING FACILITIES (Field Office, Type A)	SP-229
643.	TRAFFIC SIGNALS (Lane Use Signal Installation)	SP-230
645.	HIGHWAY SIGNING (Remove and Reset Sign)	SP-231

SECTION	TITLE	PAGE
	(Remove and Stack Sign)	
645.	HIGHWAY SIGNING (Remove and Stack Canopy Mounted Sign)	SP-233
645.	HIGHWAY SIGNING (Overhead Mainline Sign) (Cantilever Mainline Sign) (Bridge Overpass-Mounted Sign Support)	SP-234
645.	HIGHWAY SIGNING (Variable Speed Limit Sign)	SP-236
645.	HIGHWAY SIGNING (Remove and Reset Mainline Sign)	SP-237
648.	FLAGPOLE	SP-239
652.	MAINTENANCE OF TRAFFIC (General)	SP-240
652.	MAINTENANCE OF TRAFFIC (Specific Project Maintenance of Traffic Requirements)	SP-243
652.	MAINTENANCE OF TRAFFIC (Temporary Mainline Lane Closures) (Lane Closure Installation and Removal Procedures) (Temporary Mainline Shoulder Closures) (Work Requiring Complete Stoppages of Traffic) (Short-Term or Work Hour Speed)	SP-246
652.	MAINTENANCE OF TRAFFIC (Flashing Beacon – Solar Powered)	SP-251
652.	MAINTENANCE OF TRAFFIC (Construction Signs – Supplied by Authority)	SP-252
652.	MAINTENANCE OF TRAFFIC (Portable Changeable Message Sign)	SP-253
652.	MAINTENANCE OF TRAFFIC (Truck Mounted Attenuator)	SP-255
655.	ELECTRICAL WORK	SP-257

PART II – SPECIAL PROVISIONS - Continued

SECTION	TITLE	PAGE
655.	ELECTRICAL (Concrete Encased Conduit)	SP-296
655.	ELECTRICAL (Lightning Suppression System)	SP-298
655.	ELECTRICAL (Space Frame Lighting)	SP-301
655.	ELECTRICAL (LED Replacement Canopy Light Fixture)	SP-303
655.	ELECTRICAL (Tunnel Life Safety)	SP-304
656.	TEMPORARY SOIL EROSION AND WATER POLLUTION CONTROL	SP-305
670.	SEWAGE DISPOSAL SYSTEM	SP-311
719.	SIGNING MATERIAL	SP-315
800.	MISCELLANEOUS INCIDENTALS (Electrical Demolition)	SP-316
800.	MISCELLANEOUS INCIDENTALS (Temporary Power and Communication Relocation)	SP-318
800.	MISCELLANEOUS INCIDENTALS (Mechanical Demolition)	SP-319
800.	MISCELLANEOUS INCIDENTALS (HVAC Tunnel and Booths)	SP-320
800.	MISCELLANEOUS INCIDENTALS (Toll Plaza Facility Demolition and Restoration)	SP-321
800.	MISCELLANEOUS INCIDENTALS (Temporary Parking Lot)	SP-323
800.	MISCELLANEOUS INCIDENTALS (Tunnel Enclosures)	SP-325
800.	MISCELLANEOUS INCIDENTALS (New Westbound Toll Booths and Canopy)	SP-326

PART III – DIVISION 800

SECTION	TITLE	PAGE
	4 - MASONRY	
04050	Unit Masonry, General	04050 - 1 to 10
04100	Masonry Mortar and Grout	04100 - 1 to 3
04150	Masonry Accessories	04150 - 1 to 3
04210	Brick Masonry	04210 - 1 to 2
	5 – METALS	
05500	Metal Fabrications	05500 - 1 to 8
	6 - WOOD AND PLASTICS	
06100	Rough Carpentry	06100 - 1 to 5
06200	Finish Carpentry	06400 - 1 to 3
	7 - THERMAL AND MOISTURE PROTECTION	
07200	Insulation	07200 - 1 to 3
07600	Flashing and Sheet Metal	07600 - 1 to 2
07610	Metal Roofing	07610 - 1 to 11
07900	Joint Sealers	07900 - 1 to 6
	8 - DOORS AND WINDOWS	
08400	Aluminum Entrance Doors and Framing	08400 - 1 to 5
08500	Aluminum Windows	08500 - 1 to 3
08700	Finish Hardware	08700 - 1 to 3
08800	Glass and Glazing	08800 - 1 to 5
	9 - FINISHES	
09900	Painting	09900 - 1 to 11
	10 - SPECIALTIES	
10200	Miscellaneous	10200 - 1 to 1
10520	Fire Extinguishers	10520 - 1 to 2
	15 - MECHANICAL	
15000	General Mechanical	15000 - 1 to 6
15250	Insulation	15250 - 1 to 8
15400	Plumbing	15400 - 1 to 4
15700	HVAC System	15700 - 1 to 15
15800	Ductwork and Accessories	15800 - 1 to 5
15900	Automatic Temperature Controls	15900 - 1 to 6

PART IV – APPENDICES

SECTION	TITLE	PAGE
APPENDIX A	SUBSURFACE WASTEWATER DISPOSAL SYSTEM APPLICATION	AP-A1
APPENDIX B -	LEAD PAINT ASSESSMENT	AP - B1
APPENDIX C -	PLAZA SAFETY REQUIREMENTS	AP - C1
APPENDIX D -	DEFINED TERMS	AP - D1
APPENDIX E -	PLAZA WORK CHECKLIST	AP – E1
APPENDIX F -	PRODUCT DATA SHEETS	AP – F1
APPENDIX G -	GUIDE SIGN DETAILS	AP – G1

MAINE TURNPIKE AUTHORITY

MAINE TURNPIKE

CONTRACT DOCUMENTS

CONTRACT 2015.13

FALMOUTH SPUR TOLL PLAZA
OPEN ROAD TOLLING CONVERSION
(MM F2.8)

NOTICE TO CONTACTORS

PROPOSAL

CONTRACT AGREEMENT

CONTRACT BOND

FINAL LIEN AND CLAIM WAIVER AND AFFIDAVIT

SPECIFICATIONS

MAINE TURNPIKE AUTHORITY

NOTICE TO CONTRACTORS

Sealed Proposals will be received by the Maine Turnpike Authority for:

CONTRACT 2015.13

FALMOUTH SPUR TOLL PLAZA
OPEN ROAD TOLLING CONVERSION
(MM F2.8)

at the office of the Maine Turnpike Authority (Authority), 2360 Congress Street, Portland, ME, until 11:00 a.m., prevailing time as determined by the Authority on June 16, 2015 at which time and place the Proposals will be publicly opened and read. Bids will be accepted from Contractors **prequalified** by the Maine Department of Transportation for Highway and Bridge Construction Projects with an electrical subcontractor **prequalified** by the Maine Department of Transportation for Traffic Signals and Lighting Projects. All other bids may be rejected. This Project includes a wage determination developed by the State of Maine Department of Labor.

The work consists of converting the exterior two lanes in the eastbound direction to the new cash system, construction of two new westbound cash lanes, construction of a precast pedestrian tunnel for employee access and utilities, demolition of the remaining cash lanes and conversion from cash/E-ZPass into ORT lanes, and reconstruction of the mainline to accommodate approach and departure grade differentials at the modified plaza for the Maine Turnpike.

The work includes earthwork, pavement, concrete, toll plaza demolition and modification, signing, bridge overpass-mounted, overhead and cantilever sign structures, concrete barrier, guardrail, electrical work, lighting and lightning suppression systems. The work also includes the installation of tolling equipment in the tunnel, canopy, and toll booth, maintenance of traffic and all other work incidental thereto in accordance with the Plans and Specifications.

The general limits of work are from Mile F 2.0 (Station 100+00) to Mile F 3.8 (Station 193+50) in Falmouth.

Plans and Contract Documents may be examined by prospective Bidders weekdays between 8:00 a.m. and 4:30 p.m. at the office of the Maine Turnpike Authority, 2360 Congress Street, Portland, Maine. **The full size Plans** and Contract Documents may be obtained from the Authority upon payment of One Hundred and Eighty Five ($185.00) Dollars for each set, which payment will not be returned. **The half size Plans** and Contract Documents may be obtained from the Authority upon payment of One Hundred and Twenty Five ($125.00) Dollars for each set, which payment will not be returned. Checks shall be made payable to: Maine Turnpike Authority. The plans and Contract documents may also be downloaded from a link on our website at http://www.maineturnpike.com/project-and-planning/Construction-Contracts.aspx.

For general information regarding Bidding and Contracting procedures, contact Nate Carll, Purchasing Manager, at (207) 482-8115. For information regarding Schedule of Items, plan holders list and bid results, visit our website at http://www.maineturnpike.com/project-and-planning/Construction-Contracts.aspx. For Project specific information, fax all questions to Nate Carll, Purchasing Manager, at (207) 871-7739. Responses will not be prepared for questions received by telephone. Bidders shall not contact any other Authority staff or Consultants for clarification of Contract provisions, and the Authority will not be responsible for any interpretations so obtained.

All work shall be governed by the Specifications entitled "State of Maine, Department of Transportation, Standard Specifications, **Revision of December 2002**", "Standard Details, **Revision of December 2002**" and "Best Management Practices for Erosion and Sediment Control", latest issue. Copies and recent updates to these publications can be downloaded at: http://www.maine.gov/mdot/contractors/publications/.

Proposals must be accompanied by an original bid bond, certified or cashier's check payable to the Maine Turnpike Authority in an amount not less than Five (5%) Percent of the Total Amount in the Proposal, but not less than $500.00. The Bidder to whom a Contract is awarded will be required to furnish a Surety Corporation Bond, satisfactory to the Authority, on the standard Contract Bond form of the Authority, for a sum not less than the Total Amount of the Proposal.

Proposals must be made upon the Proposal Forms furnished by the Authority separately with the Contract Documents, and must be enclosed in the sealed special addressed envelope provided therefore bearing the name and address of the Bidder, the name of the Contract, and the date and time of Proposal opening on the outside.

A pre-bid conference will be held on June 02, 2015 at 11:00 a.m. at the Maine Turnpike Authority, 2360 Congress Street, Portland, Maine.

The Authority reserves the unqualified right to reject any or all Proposals and to accept that Proposal which in its sole judgment will under all circumstances serve its best interest.

MAINE TURNPIKE AUTHORITY

_____

Nate Carll
Purchasing Manager
Maine Turnpike Authority

Portland, Maine

Maine Turnpike Authority

MAINE TURNPIKE

PROPOSAL

CONTRACT 2015.13

FALMOUTH SPUR TOLL PLAZA
OPEN ROAD TOLLING CONVERSION
(MM F2.8)

MAINE TURNPIKE AUTHORITY

PROPOSAL

CONTRACT 2015.13

FALMOUTH SPUR TOLL PLAZA
OPEN ROAD TOLLING CONVERSION
(MM F2.8)

TO THE MAINE TURNPIKE AUTHORITY:

The work consists of converting the exterior two lanes in the eastbound direction to the new cash system, construction of two new westbound cash lanes, construction of a precast pedestrian tunnel for employee access and utilities, demolition of the remaining cash lanes and conversion from cash/E-ZPass into ORT lanes, and reconstruction of the mainline to accommodate approach and departure grade differentials at the modified plaza for the Maine Turnpike.

The work includes earthwork, pavement, concrete, toll plaza demolition and modification, signing, bridge overpass-mounted, overhead and cantilever sign structures, concrete barrier, guardrail, electrical work, lighting and lightning suppression systems. The work also includes the installation of tolling equipment in the tunnel, canopy, and toll booth, maintenance of traffic and all other work incidental thereto in accordance with the Plans and Specifications.

The general limits of work are from Mile F 2.0 (Station 100+00) to Mile F 3.8 (Station 193+50) in Falmouth.

This Work will be done under a Contract known as Contract 2015.13 according to the Plans and Specifications which are on file in the office of the Maine Turnpike Authority, 2360 Congress Street, Portland, Maine.

On the acceptance of this Proposal for said Work, the undersigned will give the required bond with good security conditioned for the faithful performance of said Work, according to said Plans and Specifications, and the doing of all other work required by said Specifications for the consideration herein named and with the further condition that the Authority shall be saved harmless from any and all damages that might accrue to any person, persons or property by reason of the carrying out of said Work, or any part thereof, or by reason of negligence of the undersigned, or any person or persons under his employment and engaged in said Work.

The undersigned hereby declares that he/she has carefully examined the Plans, Specifications and other Contract Documents, and that he/she will contract to carry out and complete the said Work as specified and delineated at the price per unit of measure for each scheduled item of Work stated in the Schedule of Prices as follows:

It is understood that the TOTAL AMOUNT stated by the undersigned in the following Schedule of Prices is based on approximate quantities and will be used solely for the comparison of bids, and that the quantities stated in the Schedule of Prices for the various items are estimates only and may be increased or decreased all as provided in the Specifications.

SCHEDULE OF BID PRICES
CONTRACT NO. 2015.13
Falmouth Spur Toll Plaza
Open Road Tolling Conversion
Mile F2.8

Item No	Item Description	Units	Approx. Quantities	Unit Prices in Numbers		Bid Amount in Numbers	
				Dollars	Cents	Dollars	Cents
202.071	Removing Asbestos Containing Materials, Electrical Conduit	Lump Sum	1				
202.15	Removing Existing Manhole or Catch Basin	Each	4				
202.17	Removing Existing Structural Concrete	Lump Sum	1				
202.202	Removing Pavement Surface	Square Yard	9,500				
202.206	Removing Rumble Strips	Linear Foot	525				
203.20	Common Excavation	Cubic Yard	25,300				
203.21	Rock Excavation	Cubic Yard	6,830				
203.211	Presplitting Rock/Cushion Blasting	Linear Foot	3,900				
203.212	Drilling and Blasting of Solid Rock Subgrade	Square Yard	2,800				
203.241	Common Borrow, Truck Measure	Cubic Yard	540				
203.25	Granular Borrow	Cubic Yard	8,635				

CARRIED FORWARD:

Item No	Item Description	Units	Approx. Quantities	Unit Prices in Numbers		Bid Amount in Numbers	
				Dollars	Cents	Dollars	Cents
			BROUGHT FORWARD:				
205.51	Widening of Existing Shoulder	Linear Foot	2,565				
206.07	Structural Rock Excavation – Drainage and Minor Structures	Cubic Yard	15				
206.08	Structural Earth Excavation – Major Structures	Cubic Yard	2,060				
206.092	Structural Rock Excavation – Major Structures	Cubic Yard	160				
304.09	Aggregate Base Course - Crushed	Cubic Yard	4,150				
304.10	Aggregate Subbase Course - Gravel	Cubic Yard	6,520				
403.207	Hot Mix Asphalt, 19.0 mm Nominal Maximum Size	Ton	5,450				
403.2083	Hot Mix Asphalt, 12.5 mm (Polymer Modified)	Ton	2,350				
403.209	Hot Mix Asphalt, 9.5 mm Nominal Maximum Size (sidewalks, drives, islands & incidentals)	Ton	340				
403.211	Hot Mix Asphalt (shimming)	Ton	170				
403.213	Hot Mix Asphalt, 12.5 mm Nominal Maximum Size, Base	Ton	1,800				
409.15	Bituminous Tack Coat, Applied	Gallon	3,950				

CARRIED FORWARD:

Item No	Item Description	Units	Approx. Quantities	Unit Prices in Numbers		Bid Amount in Numbers	
				Dollars	Cents	Dollars	Cents
			BROUGHT FORWARD:				
419.30	Sawing Bituminous Pavement	Linear Foot	7,600				
424.323	Asphalt Rubber Fiber Crack Sealer - Applied	Pound	950				
502.231	Structural Concrete, Space Frame Pedestals	Cubic Yard	35				
502.232	Structural Concrete, Space Frame Foundations	Cubic Yard	90				
502.233	Structural Concrete, Canopy Column Foundations	Cubic Yard	15				
502.261	Structural Concrete, ORT Slabs	Cubic Yard	145				
502.262	Structural Concrete, Pavement Slabs	Cubic Yard	185				
502.263	Structural Concrete, Plaza Islands, Bumpers, and Curtain Walls	Cubic Yard	155				
503.14	Epoxy-Coated Reinforcing Steel, Fabricated and Delivered	Pound	36,060				
503.15	Epoxy-Coated Reinforcing Steel, Placing	Pound	36,060				
503.18	Glass Fiber Reinforced Polymer (GFRP) Reinforcing Bars, Fabricated and Delivered	Pound	23,425				
503.19	Glass Fiber Reinforced Polymer (GFRP) Reinforcing Bars, Placing	Pound	23,425				

CARRIED FORWARD:

Item No	Item Description	Units	Approx. Quantities	Unit Prices in Numbers		Bid Amount in Numbers	
				Dollars	Cents	Dollars	Cents
			BROUGHT FORWARD:				
503.90	Synthetic Fiber Reinforcement	Pound	1,635				
504.80	Space Frame Canopy, Fabricated and Delivered	Lump Sum	1				
504.81	Space Frame Canopy, Erection	Lump Sum	1				
504.90	Steel Post Support System	Lump Sum	1				
504.91	Mounting Bracket Assemblies	Lump Sum	1				
504.96	Metal Stairs	Lump Sum	1				
506.14	Field Painting of Existing Steel	Lump Sum	1				
506.15	Shop Coating of New Steel	Lump Sum	1				
506.17	Surface Preparation of Existing Steel	Lump Sum	1				
506.18	Containment System and Pollution Control Measures	Lump Sum	1				
506.191	Disposal of Hazardous or Toxic Material	Lump Sum	1				
508.14	High Performance Waterproofing Membrane	Lump Sum	1				

CARRIED FORWARD:

Item No	Item Description	Units	Approx. Quantities	Unit Prices in Numbers		Bid Amount in Numbers	
				Dollars	Cents	Dollars	Cents
			BROUGHT FORWARD:				
511.091	Temporary Earth Support Systems	Lump Sum	1				
515.201	Pigmented Protective Coating for Concrete Surfaces	Square Yard	200				
515.2011	Pigmented Concrete Protective Coating - Tunnel Walls & Ceiling	Square Yard	400				
515.2012	Pigmented Concrete Protective Coating - Tunnel Floor	Square Yard	135				
515.202	Clear Protective Coating for Concrete Surfaces	Square Yard	5,380				
515.23	Epoxy Overlay	Square Yard	110				
526.306	Temporary Concrete Barrier Type I - Supplied by the Authority	Lump Sum	1				
526.351	Median Barrier Type I - Precast	Linear Foot	1,220				
526.3511	Median Barrier Type IA - Precast	Linear Foot	1,600				
526.352	Median Barrier Type II - Cast-in-Place	Linear Foot	16				
526.3522	Median Barrier Type II - Precast	Linear Foot	174				
526.353	Median Barrier Type III - Precast	Linear Foot	150				

CARRIED FORWARD:

Item No	Item Description	Units	Approx. Quantities	Unit Prices in Numbers		Bid Amount in Numbers	
				Dollars	Cents	Dollars	Cents
			BROUGHT FORWARD:				
526.361	Median Barrier Transition Type I - Precast	Each	7				
526.362	Median Barrier Transition Type II - Precast	Each	2				
527.306	Center Barrier Crash Attenuator (FasTRACC)	Each	2				
527.341	Work Zone Crash Cushions - TL-3	Unit	6				
535.70	Precast Concrete Tunnel	Lump Sum	1				
535.71	Precast Concrete Utility Pit	Each	2				
603.155	12 inch Reinforced Concrete Pipe - Class III	Linear Foot	850				
603.159	12 inch Culvert Pipe Option III	Linear Foot	12				
603.165	15 inch Reinforced Concrete Pipe - Class III	Linear Foot	70				
603.179	18 inch Culvert Pipe Option III	Linear Foot	24				
603.199	24 inch Culvert Pipe Option III	Linear Foot	36				
603.209	30 inch Culvert Pipe Option III	Linear Foot	24				

CARRIED FORWARD:

Item No	Item Description	Units	Approx. Quantities	Unit Prices in Numbers		Bid Amount in Numbers	
				Dollars	Cents	Dollars	Cents
			BROUGHT FORWARD:				
603.28	Concrete Collar for Reinforced Concrete Pipe	Each	8				
604.09	Catch Basin Type B1	Each	9.4				
604.15	Manhole	Each	2.5				
604.26	Catch Basin Type B5	Each	6				
605.11	12 inch Underdrain Type C	Linear Foot	610				
606.1723	Bridge Transition - Type III	Each	1				
606.1724	Bridge Transition - Type III, Modified	Each	4				
606.178	Guardrail Beam	Linear Foot	50				
606.24	Guardrail Type 3d - Single Rail	Linear Foot	1,275				
606.265	Terminal End - Single Rail - Galvanized Steel	Each	2				
606.278	Terminal End - Anchored End	Each	6				
606.279	Terminal End - Anchored End, Thrie Beam	Each	2				

CARRIED FORWARD:

Item No	Item Description	Units	Approx. Quantities	Unit Prices in Numbers		Bid Amount in Numbers	
				Dollars	Cents	Dollars	Cents
				BROUGHT FORWARD:			
606.352	Reflectorized Beam Guardrail Delineator	Each	125				
606.353	Delineator Post	Each	60				
606.354	Delineator Post - Remove and Reset	Each	13				
606.3605	Guardrail - Remove, Modify and Reset, Single Rail	Linear Foot	1,575				
606.3606	Guardrail - Remove, Modify and Reset, Double Rail	Linear Foot	50				
606.3631	Guardrail - Remove, Stack and Dispose	Linear Foot	250				
606.48	Single Galvanized Steel Post	Each	20				
606.64	Guardrail Thrie Beam - Double Rail	Linear Foot	275				
606.65	Guardrail Thrie Beam - Single Rail	Linear Foot	50				
606.754	Widen Shoulder for Guardrail 350 Flared Terminal	Each	3				
606.80	Guardrail 350 FLEAT Terminal	Each	6				
607.40	Chain Link Fence - 3' High	Linear Foot	400				

CARRIED FORWARD:

Item No	Item Description	Units	Approx. Quantities	Unit Prices in Numbers		Bid Amount in Numbers	
				Dollars	Cents	Dollars	Cents
			BROUGHT FORWARD:				
607.41	Post Assembly for Sign or Chain Link Fence	Each	56				
608.08	Reinforced Concrete Sidewalk	Square Yard	87				
608.26	Curb Ramp Detectable Warning Field	Square Foot	10				
609.11	Vertical Curb Type 1	Linear Foot	32				
609.12	Vertical Curb Type 1 - Circular	Linear Foot	15				
609.191	Concrete Curb Type 2	Linear Foot	60				
609.237	Terminal Curb Type 1 - 7 ft	Each	2				
610.08	Plain Riprap	Cubic Yard	71				
610.18	Stone Ditch Protection	Cubic Yard	14				
610.181	Temporary Stone Check Dam	Cubic Yard	80				
613.319	Erosion Control Blanket	Square Yard	2,050				
615.07	Loam	Cubic Yard	1,600				

CARRIED FORWARD:

Item No	Item Description	Units	Approx. Quantities	Unit Prices in Numbers		Bid Amount in Numbers	
				Dollars	Cents	Dollars	Cents
			BROUGHT FORWARD:				
618.1301	Seeding Method Number 1, Plan Quantity	Unit	1				
618.1401	Seeding Method Number 2, Plan Quantity	Unit	92				
618.1411	Seeding Method Number 3, Plan Quantity	Unit	35				
619.1201	Mulch, Plan Quantity	Unit	126				
619.1202	Temporary Mulch	Lump Sum	1				
620.58	Erosion Control Geotextile	Square Yard	230				
625.103	1 1/4 inch Non-metallic Pipe-Flexible	Linear Foot	880				
626.11	Precast Concrete Junction Box	Each	18				
626.12	Quazite Junction Box	Each	6				
626.31	18 Inch Foundation	Each	2				
626.32	24 Inch Foundation	Each	28				
627.681	Temporary 6 Inch Painted Pavement Marking Line - Yellow or White	Linear Foot	17,000				

CARRIED FORWARD:

Item No	Item Description	Units	Approx. Quantities	Unit Prices in Numbers		Bid Amount in Numbers	
				Dollars	Cents	Dollars	Cents
			BROUGHT FORWARD:				
627.73	Temporary 6 Inch Pavement Marking Tape	Linear Foot	4,050				
627.731	Temporary 6 Inch Black Pavement Marking Tape	Linear Foot	2,300				
627.77	Removing Existing Pavement Marking	Square Foot	6,000				
627.812	Temporary Raised Pavement Markers	Each	1,000				
629.05	Hand Labor, Straight Time	Hour	40				
631.10	Air Compressor (including operator)	Hour	40				
631.11	Air Tool (including operator)	Hour	40				
631.12	All Purpose Excavator (including operator)	Hour	40				
631.171	Truck - small (including operator)	Hour	40				
631.18	Chain Saw Rental (including operator)	Hour	10				
631.32	Culvert Cleaner (including operators)	Hour	10				
631.36	Foreman	Hour	40				

CARRIED FORWARD:

Item No	Item Description	Units	Approx. Quantities	Unit Prices in Numbers		Bid Amount in Numbers	
				Dollars	Cents	Dollars	Cents
			BROUGHT FORWARD:				
631.50	Jackhammer (Air Tool Including Operator)	Hour	40				
631.51	Bucket Truck	Hour	40				
631.52	Scissor Lift	Hour	40				
631.53	Electrician	Hour	80				
631.54	Electrician's Apprentice	Hour	80				
633.021	Propane Service Line	Lump Sum	1				
634.208	Remove and Reset Light Standard	Each	18				
639.18	Field Office, Type A	Each	1				
643.711	Lane Use Signal Installation	Each	4				
645.105	Remove and Stack Sign	Each	53				
645.107	Remove and Stack Canopy Mounted Sign	Each	4				
645.109	Remove and Reset Sign	Each	3				

CARRIED FORWARD:

Item No	Item Description	Units	Approx. Quantities	Unit Prices in Numbers		Bid Amount in Numbers	
				Dollars	Cents	Dollars	Cents
				BROUGHT FORWARD:			
645.121	Overhead Guide Sign: (Sta. 132+50)	Lump Sum	1				
645.122	Overhead Guide Sign: (Sta. 150+50)	Lump Sum	1				
645.131	Bridge Overpass-Mounted Guide Sign: (Sta. 80+60)	Lump Sum	1				
645.151	Cantilever Guide Sign: (Sta. 107+00)	Lump Sum	1				
645.152	Cantilever Guide Sign: (Sta. 120+00)	Lump Sum	1				
645.153	Cantilever Guide Sign: (Sta. 177+00)	Lump Sum	1				
645.154	Cantilever Guide Sign: (Sta. 193+50)	Lump Sum	1				
645.155	Variable Speed Limit Sign	Each	2				
645.161	Breakaway Device Single Pole	Each	2				
645.162	Breakaway Device Multi Pole	Each	10				
645.251	Roadside Guide Signs, Type I	Square Foot	220				
645.271	Regulatory, Warning, Confirmation and Route Assembly Sign, Type I	Square Foot	375				

CARRIED FORWARD:

Item No	Item Description	Units	Approx. Quantities	Unit Prices in Numbers		Bid Amount in Numbers	
				Dollars	Cents	Dollars	Cents
			BROUGHT FORWARD:				
645.289	Steel H-Beam Poles	Pound	2,905				
645.501	Remove and Reset Mainline Sign No. 1	Lump Sum	1				
645.502	Remove and Reset Mainline Sign No. 2	Lump Sum	1				
645.503	Remove and Reset Mainline Sign No. 3	Lump Sum	1				
645.504	Remove and Reset Mainline Sign No. 4	Lump Sum	1				
645.505	Remove and Reset Mainline Sign No. 5	Lump Sum	1				
645.506	Remove and Reset Mainline Sign No. 6	Lump Sum	1				
645.507	Remove and Reset Mainline Sign No. 7	Lump Sum	1				
645.508	Remove and Reset Mainline Sign No. 8	Lump Sum	1				
645.509	Remove and Reset Mainline Sign No. 9	Lump Sum	1				
645.512	Remove and Reset Mainline Sign No. 12	Lump Sum	1				
645.513	Remove and Reset Mainline Sign No. 13	Lump Sum	1				

CARRIED FORWARD:

Item No	Item Description	Units	Approx. Quantities	Unit Prices in Numbers		Bid Amount in Numbers	
				Dollars	Cents	Dollars	Cents
			BROUGHT FORWARD:				
645.514	Remove and Reset Mainline Sign No. 14	Lump Sum	1				
645.516	Remove and Reset Mainline Sign No. 16	Lump Sum	1				
648.01	Remove and Reset Flagpole	Lump Sum	1				
652.30	Flashing Arrow	Each	4				
652.301	Flashing Beacon - Solar Powered	Each	2				
652.312	Type III Barricades	Each	10				
652.33	Drum	Each	270				
652.34	Cone	Each	100				
652.35	Construction Signs	Square Foot	2,100				
652.361	Maintenance of Traffic Control Devices	Lump Sum	1				
652.38	Flaggers	Hour	50				
652.41	Portable-Changeable Message Sign	Each	4				

CARRIED FORWARD:

Item No	Item Description	Units	Approx. Quantities	Unit Prices in Numbers		Bid Amount in Numbers	
				Dollars	Cents	Dollars	Cents
			BROUGHT FORWARD:				
652.45	Truck Mounted Attenuator	Calendar Day	60				
655.01	Installation of ORT Lane Controller Cabinet	Each	2				
655.012	Installation of Cash Lane Controller Cabinet	Each	5				
655.02	DVAS Mount Installation	Each	9				
655.03	VCARS Mount Installation	Each	12				
655.04	Installation of Sensor Loops	Lump Sum	1				
655.05	Installation of AVI Antennas	Each	11				
655.06	Installation of AVI Readers	Each	2				
655.061	Relocation of AVI Readers	Each	1				
655.07	Traffic Control Pedestal Preparation Work	Each	5				
655.09	Armored Cable - 10/3	Linear Foot	100				
655.10	#4 AWG Wire	Linear Foot	5,550				

CARRIED FORWARD:

Item No	Item Description	Units	Approx. Quantities	Unit Prices in Numbers		Bid Amount in Numbers	
				Dollars	Cents	Dollars	Cents
			BROUGHT FORWARD:				
655.101	#6 AWG Wire	Linear Foot	9,100				
655.11	#10 AWG Wire	Linear Foot	5,500				
655.12	#12 AWG Wire	Linear Foot	24,500				
655.13	#14 AWG Wire	Linear Foot	14,000				
655.14	4pr/24 (Category 5e) Cable	Linear Foot	7,400				
655.15	LMR 400 Cable	Linear Foot	1,330				
655.16	6 Strand Multi-modal Fiber Optic Cable	Linear Foot	2,100				
655.17	IVIS Homerun Loop Cable (IMSA 50-2 #16)	Linear Foot	5,800				
655.18	Half Diamond Loop Wire (#16 XHHW or XLP Stranded Wire)	Linear Foot	400				
655.19	500 MCM Wire	Linear Foot	1,050				
655.191	50 Pair 24AWG Telephone Cable - PE89 Direct Burial	Linear Foot	350				
655.200	1 1/2" Schedule 40 PVC Conduit	Linear Foot	160				

CARRIED FORWARD:

Item No	Item Description	Units	Approx. Quantities	Unit Prices in Numbers		Bid Amount in Numbers	
				Dollars	Cents	Dollars	Cents
			BROUGHT FORWARD:				
655.201	3" Schedule 40 PVC Conduit	Linear Foot	3,930				
655.202	4" Schedule 40 PVC Conduit	Linear Foot	1,300				
655.2021	1" Schedule 80 PVC Conduit	Linear Foot	220				
655.203	1 1/2" Schedule 80 PVC Conduit	Linear Foot	900				
655.2031	2" Schedule 80 PVC Conduit	Linear Foot	5,050				
655.204	3" Schedule 80 PVC Conduit	Linear Foot	5,350				
655.205	4" Schedule 80 PVC Conduit	Linear Foot	300				
655.2051	6" Schedule 80 PVC Conduit	Linear Foot	100				
655.206	1" Galvanized Rigid Metal Conduit	Linear Foot	600				
655.207	1 1/2" Galvanized Rigid Metal Conduit	Linear Foot	350				
655.208	3" Galvanized Rigid Metal Conduit	Linear Foot	550				
655.209	1/2" Liquid Tight Metallic Flexible Conduit	Linear Foot	400				

CARRIED FORWARD:

Item No	Item Description	Units	Approx. Quantities	Unit Prices in Numbers		Bid Amount in Numbers	
				Dollars	Cents	Dollars	Cents
			BROUGHT FORWARD:				
655.210	3/4" Liquid Tight Metallic Flexible Conduit	Linear Foot	270				
655.2101	1 1/2" Liquid Tight Metallic Flexible Conduit	Linear Foot	100				
655.2102	2" Liquid Tight Metallic Flexible Conduit	Linear Foot	100				
655.211	1 1/2" Electrical Metallic Tubing Conduit	Linear Foot	40				
655.212	2" Electrical Metallic Tubing Conduit	Linear Foot	80				
655.213	3" Electrical Metallic Tubing Conduit	Linear Foot	40				
655.214	4" Electrical Metallic Tubing Conduit	Linear Foot	40				
655.215	3/4" Electrical Metallic Tubing Conduit	Linear Foot	50				
655.221	Type A Pull Box Inside	Each	8				
655.222	Type C Pull Box in Tunnel	Each	18				
655.223	Type D Pull Box Outdoor Canopy	Each	4				
655.224	Type E Pull Box Steel in booth	Each	8				

CARRIED FORWARD:

Item No	Item Description	Units	Approx. Quantities	Unit Prices in Numbers		Bid Amount in Numbers	
				Dollars	Cents	Dollars	Cents
			BROUGHT FORWARD:				
655.225	Type F Pull Box Outside	Each	20				
655.30	12" x 12" x 6" Galvanized Junction Box	Each	62				
655.31	18" x 18" x 6" Galvanized Junction Box	Each	4				
655.40	24" x 24" x 12" Junction Box	Each	6				
655.42	36" x 30" x 20" NEMA 4X Cabinet	Each	2				
655.43	60 AMP Panelboard Cabinet	Each	6				
655.51	4" Schedule 80 PVC Conduit Condulets	Each	4				
655.52	1" Rigid Metal Conduit Condulets	Each	40				
655.53	1½" Rigid Metal Conduit Condulets	Each	20				
655.55	3" Electrical Metal Tubing Condulets	Each	32				
655.63	4-inch x 4-inch Plastic NEMA 4R Wireway	Linear Foot	100				
655.64	6-inch x 6-inch Plastic NEMA 4R Wireway	Linear Foot	400				

CARRIED FORWARD:

Item No	Item Description	Units	Approx. Quantities	Unit Prices in Numbers		Bid Amount in Numbers	
				Dollars	Cents	Dollars	Cents
			BROUGHT FORWARD:				
655.71	Removal of Existing Select Toll Equipment	Lump Sum	1				
655.75	Concrete Encased Conduit	Cubic Yard	90				
655.80	Lightning Suppression System	Lump Sum	1				
655.81	Key Switch	Each	12				
655.82	Duplex Receptacle	Each	14				
655.83	NEMA L5-30R Receptacle	Each	4				
655.84	Quadplex Receptacle	Each	12				
655.85	Electrical/Communications Vault/Manhole	Each	4				
655.90	Space Frame Lighting	Lump Sum	1				
655.91	LED Replacement Canopy Light Fixture	Each	4				
655.92	LED Canopy Light Fixture	Each	4				
655.93	Tunnel Life Safety	Lump Sum	1				

CARRIED FORWARD:

Item No	Item Description	Units	Approx. Quantities	Unit Prices in Numbers		Bid Amount in Numbers	
				Dollars	Cents	Dollars	Cents
			BROUGHT FORWARD:				
656.50	Baled Hay, in place	Each	50				
656.60	Temporary Berms	Linear Foot	2,100				
656.62	Temporary Slope Drains	Linear Foot	150				
656.632	30" Temporary Silt Fence	Linear Foot	8,000				
659.10	Mobilization	Lump Sum	1				
670.01	Sewage Disposal Replacement System	Lump Sum	1				
800.10	Electrical Demolition	Lump Sum	1				
800.15	Temporary Power Relocation	Lump Sum	1				
800.20	Mechanical Demolition	Lump Sum	1				
800.22	HVAC Tunnel and Booths	Lump Sum	1				
800.30	Toll Plaza Demolition and Restoration	Lump Sum	1				
800.31	Temporary Parking Lot	Lump Sum	1				

CARRIED FORWARD:

Item No	Item Description	Units	Approx. Quantities	Unit Prices in Numbers		Bid Amount in Numbers	
				Dollars	Cents	Dollars	Cents
			BROUGHT FORWARD:				
800.40	Tunnel Enclosures	Lump Sum	1				
800.50	New Westbound Toll Booths and Canopy	Lump Sum	1				
					TOTAL:		

Acknowledgment is hereby made of the following Addenda received since issuance of the Plans and Specifications: _____
_____
_____

We will enter into a Contract with the following electrical contractor prequalified by the Maine Department of Transportation for Traffic Signals and Lighting Projects for all the 655 pay item work if awarded the Project_____.

Accompanying this Proposal is an original bid bond, cashiers or certified check on _____ Bank, for _____, payable to the Maine Turnpike Authority. In case this Proposal shall be accepted by the Maine Turnpike Authority and the undersigned should fail to execute a Contract with, and furnish the security required by the Maine Turnpike Authority as set forth in the Specifications, within the time fixed therein, an amount of money equal to Five (5%) Percent of the Total Amount of the Proposal for the Contract awarded to the undersigned, but not less than $500.00, obtained out of the original bid bond, cashier's or certified check, shall become the property of the Maine Turnpike Authority; otherwise the check will be returned to the undersigned.

The performance of said Work under this Contract will be completed during the time specified in Subsection 107.1.

It is agreed that time is of the essence of this Contract and that I (we) will, in the event of my (our) failure to complete the Work within the time limit named above, pay to Maine Turnpike Authority liquidated damages in the amount or amounts stated in the Specifications.

The undersigned is an Individual/Partnership/Corporation under the laws of the State of _____, having principal office at _____, thereunto duly authorized.

_____ *(SEAL)*

_____ *(SEAL)*

Affix Corporate Seal
or Power of Attorney
Where Applicable

_____ *(SEAL)*

By: _____

Its: _____

Information below to be typed or printed where applicable:

INDIVIDUAL:

_____	_____
(Name)	(Address)

PARTNERSHIP - Name and Address of General Partners:

_____	_____
(Name)	(Address)
_____	_____
(Name)	(Address)
_____	_____
(Name)	(Address)
_____	_____
(Name)	(Address)

INCORPORATED COMPANY:

_____	_____
(President)	(Address)
_____	_____
(Vice-President)	(Address)
_____	_____
(Secretary)	(Address)
_____	_____
(Treasurer)	(Address)

MAINE TURNPIKE AUTHORITY

MAINE TURNPIKE

YORK TO AUGUSTA

CONTRACT AGREEMENT

This Agreement made and entered into between the Maine Turnpike Authority, and sometimes termed the "Authority", and _____

_____

herein termed the "Contractor":

WITNESSETH: That the Authority and the Contractor, in consideration of the premises and of the mutual covenants, considerations and agreements herein contained, agree as follows:

FIRST: The parties hereto mutually agree that the documents attached hereto and herein incorporated and made a part hereof collectively evidencing and constituting the entire Contract to the same extent as if herein written in full, are the Notice to Contractors, the Accepted Proposal, the Specifications, the Plans, this Agreement, the Contract Bond and all Addenda to the Contract Documents duly issued and herewith enumerated:

_____

_____

SECOND: The Contractor for and in consideration of certain payments to be made as hereafter specified, hereby covenants and agrees to perform and execute all of the provisions of this Contract and of all documents and parts attached hereto and made a part thereof, and at his own cost and expense to furnish and perform everything necessary and required to construct and complete, ready for its intended purpose, in accordance with the Contract and such instructions as the Engineer may give, acceptable to the Authority, in the times provided, all of the Work covered and included under Contract No. _____ covering _____ as herein described.

THIRD: In consideration of the performance by the Contractor of his covenants and agreements as herein set forth, the Authority hereby covenants and agrees to pay the Contractor according to the Schedule of Prices set forth in the Proposal with additions and deductions as elsewhere herein provided in the times and in the manner stated in the Specifications. This Agreement shall insure to the benefit of, and shall be binding upon the parties hereto, and upon their respective successors and assigns; but neither party hereto shall assign or transfer his interest herein in whole or in part without the consent of the other, except as herein provided.

IN WITNESS WHEREOF the parties to this Agreement have executed the same in duplicate.

AUTHORITY -

MAINE TURNPIKE AUTHORITY

By: _____

Title: CHAIRMAN

Date of Signature: _____

ATTEST:

_____
Secretary

CONTRACTOR -

_____
CONTRACTOR

By: _____

Title: _____

Date of Signature: _____

WITNESS:

_____

CONTRACT BOND

KNOW ALL MEN BY THESE PRESENTS that _____

of _____ in the County of _____ and State of _____

as Principal, and _____ a Corporation duly organized under

the laws of the State of _____ and having a usual place of business in _____

_____

As Surety, are held and firmly bound unto the Maine Turnpike Authority in the sum of _____Dollars ($_____.___), to be paid to said Maine Turnpike Authority, or its successors, for which payment, well and truly to be made, we bind ourselves, our heirs, executors, successors and assigns jointly and severally by these presents.

The condition of this obligation is such that the Principal designated as Contractor in the foregoing Contract No. _____ shall faithfully perform the Contract on his part and satisfy all claims and demands incurred for the same and shall pay all bills for labor, material, equipment and all other items contracted for, or used by him, in connection with the Work contemplated by said Contract, and shall fully reimburse the Obligee for all outlay and expense which the Obligee may incur in making good any default of said Principal, then this Obligation shall be null and void; otherwise it shall remain in full force and effect.

Signed and sealed this _____ day of _____, A.D., 201___

Witnesses:	CONTRACTOR	
_____	_____	*(SEAL)*
_____	_____	*(SEAL)*
_____	_____	*(SEAL)*
	SURETY	
_____	_____	*(SEAL)*
_____	_____	*(SEAL)*
_____	_____	*(SEAL)*

(Surety must attach copy of Power of Attorney showing authority of Office or Agent to execute bonds)

FINAL LIEN AND CLAIM WAIVER AND AFFIDAVIT

Upon receipt of the sum of _____, which sum represents the total amount paid, including the current payment for work done and materials supplied for Project No. _____, in _____, Maine, under the undersigned's Contract with the Maine Turnpike Authority.

The undersigned, on oath, states that the Final Payment of _____ is the final payment for all work, labor, materials, services and miscellaneous (all of which are hereinafter referred to as "Work Items") supplied to the said Project through _____and that no additional sum is claimed by the undersigned respecting said Project.

The undersigned, on oath, states that all persons and firms who supplied Work Items to the undersigned in connection with said Project have been fully paid by the undersigned for such Work Items or that such payment will be fully effected immediately upon receipt of this payment.

In consideration of the payment herewith made, the undersigned does fully and finally release and hold harmless the Maine Turnpike Authority, and its Surety, if any, from any and all claims, liens or right to claim or lien, arising out of this Project under any applicable bond, law or statute.

It is understood that this Affidavit is submitted to assure the Owner and others that all liens and claims relating to the Work Items furnished by the undersigned are paid.

_____
(Contractor)

By: _____

Title: _____

State of MAINE

County of _____

I, _____, hereby certify on behalf of _____
(Company Officer) *(Company Name)*

its _____, being first duly sworn and stated that the foregoing representations are
(Title)

are true and correct upon his own knowledge and that the foregoing is his free act and deed in said capacity and the free act and deed of the above-named _____.
(Company Name)

The above-named, _____, personally appeared before me this ____ day of _____ and swears that this is his free act and deed.

(SEAL)

_____
Notary Public

My Commission Expires: _____

MAINE TURNPIKE AUTHORITY

SPECIFICATIONS

PART I – GENERAL PROVISIONS

(Rev. May 18, 2009)

DIVISION 100 - GENERAL PROVISIONS

100.1 Replacement of Former Standard Specifications and Details

The following paragraphs are added:

The Maine Department of Transportation Standard Specifications Revisions of 2002 as modified herein is referenced and incorporated in all Maine Turnpike Authority Construction Contracts. These Maine Turnpike General Provisions replace all previous Maine Turnpike General Provisions and are additions and alterations to the Maine Department of Transportation Standard Specifications. Maine Department of Transportation Consolidated Special Provisions or corrections, additions, and revisions to their Standard Specifications are not referenced or incorporated unless specifically included in the Contract. Applicable MaineDOT December 28, 2004 Consolidated Special Provisions, corrections, additions, and revisions have been incorporated into this document.

All references to components or employees of the Maine Department of Transportation listed in Column A shall also refer to components or employees of the Maine Turnpike Authority in Column B unless otherwise stated.

A	B
Maine Department of Transportation	Maine Turnpike Authority
Department	Authority
Commissioner	Executive Director
Contracts Engineer	Purchasing Manager
Contracts Section	Purchasing Department
Chief Engineer	Director of Engineering
Bureau of Project Development	Maine Turnpike Authority

SECTION 101 – CONTRACT INTERPRETATION

101.2 Definitions

The following definitions are added or revised:

Authority - The Maine Turnpike Authority, a body corporate and politic duly created and existing under and by virtue of an act of the Legislature of the State of Maine, Chapter 69 of the Private and Special Laws of 1941, as amended.

Award - The resolution of the Authority at an official meeting expressly authorizing the Executive Director or his designee to notify the successful Bidder that his/her Proposal has been accepted and that he/she is required to execute the Contract Agreement and to furnish satisfactory Bonds.

Environmental Information - Hazardous waste assessments, dredge material test results, boring logs, geophysical studies, and other records and reports of the environmental conditions. For a related provision, see Subsection 104.3.14, Interpretation and Interpolation.

Fabrication Engineer - The Department's representative responsible for Quality Assurance of pre-fabricated products that are produced off-site.

Geotechnical Information - Replace with the following: "Boring logs, soil reports, geotechnical design reports, ground penetrating radar evaluations, seismic refraction studies, and other records of subsurface conditions. For a related provision, see Subsection 104.3.14, Interpretation and Interpolation.

Holidays - The following are extended to include the Holiday Period:

HOLIDAY	HOLIDAY PERIOD
Martin Luther King Day	12:01 a.m. (Midnight) to 11:59 p.m. Martin Luther King Day.
President's Day	12:01 a.m. (Midnight) preceding Friday to 12:01 p.m. following Tuesday.
Easter	12:01 a.m. (Midnight) preceding Friday to 12:01 p.m. following Monday.
Memorial Day	12:01 p.m. preceding Thursday to 6:00 a.m. following Tuesday.
Labor Day	12:01 p.m. preceding Thursday to 6:00 a.m. following Tuesday.
Columbus Day	12:01 a.m. (Midnight) preceding Friday to 12:01 p.m. following Tuesday.
Veterans' Day	12:01 a.m. (Midnight) to 11:59 p.m. Veterans' Day.
Thanksgiving Day	12:01 a.m. (Midnight) preceding Wednesday to 12:01 p.m. following Monday.

Project - The following sentence is added:

All the Work to be performed under the Contract.

Solicitation - Contract proposal sent to a select list of Contractors. Solicitations do include a requirement for a bid bond. Solicitations do not need Maine Turnpike Board Approval for an award.

Turnpike - The entire toll highway, including all approaches, bridges, interchanges, toll facilities, and structures owned by the Maine Turnpike Authority, and authorized by Chapter 69, Private and Special Laws of Maine, 1941, as amended, and located on properties held in the name of the Authority.

Working Day - The Contractor shall not work during the period from 1/2-hour after sunset to 1/2-hour before sunrise, unless otherwise approved by the Resident.

If, after approval, Work is performed on a Saturday, Sunday, or a holiday, the day shall be considered a Working Day.

SECTION 102 - BIDDING

102.1.1 Basic Requirements

This Subsection is amended by the addition of the following:

To be eligible to Bid, prospective Bidders must not have been debarred or suspended from Bidding by the Authority or the Maine Department of Transportation.

102.6 Bid Guaranty

The second paragraph is deleted and replaced with the following:

No Proposal will be considered unless accompanied by a "Proposal Guaranty" in the form of an original bid bond, certified or cashier's check in favor of the Maine Turnpike Authority, in the amount of not less than five (5%) percent of the Total Amount of the Proposal, except that the amount of the check or Proposal Guaranty shall not be less than $500.00. Solicitations do not require a Bid Guaranty.

Sentence (C) of the third paragraph is deleted and not replaced.

102.7.1 Location and Time

The first paragraph is deleted and replaced with the following:

The Proposal and the Proposal Guaranty shall be enclosed in a sealed envelope furnished by the Authority for this purpose, and shall bear on the outside, the name and address of the Bidder as well as the designation of the Project as named in the Proposal form. Proposals will be received at the place and time stated in the Notice to Contractors, Solicitation, or Addendum as determined by the Authority. Proposals received after the time for opening of bids will be returned to the Bidder unopened. See also Subsection 102.11, Bid Responsiveness.

102.7.2 Effects of Signing and Delivery of Bids

Paragraph C, Certifications, is deleted and not replaced.

SECTION 103 - AWARD AND CONTRACTING

103.3.1 Notice and Information Gathering

This Subsection is deleted and replaced with the following:

The Authority will review the Bid Proposals. As a condition for Award of a Contract, the Authority may require an Apparent Successful Bidder to demonstrate to the Authority's satisfaction that the Bidder is responsible and qualified to perform the Work. If such information is required, the Authority, or the Authority’s agent, will contact the Apparent Successful Bidder and request specific information. If requested by the Apparent Successful Bidder, this request can be in writing. The Apparent Successful Bidder shall respond to the request within 24-hours (one work day) unless both parties agree in writing to extend the deadline.

103.3.2 Notice of Determination

The first paragraph is deleted and replaced with the following:

If the Authority determines that a Bidder is “Not Qualified”, the Authority or its representative will notify the Bidder in writing of its determination. The notice will set forth the specific reasons therefore to the extent practical. Such reasons may include the following:

N. Bidder has previously performed Work for the State or for the Authority in an unsatisfactory manner;

O. Bidder does not have the capacity to perform the required Work in the opinion of the Authority;

P. This Project combined with other projects committed to by the Bidder puts him in excess of his capacity in the opinion of the Authority;

Q. Reasonable grounds for believing that the Bidder is interested in more than one Proposal for the Work contemplated;

R. Developments arise which, in the opinion of the Authority, adversely affect the Bidder's responsibility; and/or,

S. Lack of qualifications as determined by the Authority.

The Maine Turnpike Authority Board or Executive Director must approve the Award of a Contract. Once approved, the Contractor will be provided with a "Notice of Award". See Subsection 103.4.

103.3.3 Appeal

"Commissioner" is replaced with "Chief Operations Officer".

The third and fourth paragraphs are deleted and replaced with the following:

Within 14 Days of Receipt of such information and arguments, the Chief Operations Officer will notify the Bidder in writing as to whether the decision of "Not Qualified" is upheld, modified, or reversed. The Chief Operations Officer's decision is final.

After a final determination of "Not Qualified" the Bidder's Bid Guaranty will be returned and the Bidder will be ineligible to bid on future MTA Contracts until the Bidder has been determined "Qualified" by the Maine Turnpike.

103.4 Notice of Award

This Subsection is deleted and replaced with the following:

Within five (5) days of the Maine Turnpike Authority Board or Executive Director approval of a Contract Award, the Authority will transmit to the successful Bidder a Notice of Award along with the Contract Documents for execution by the Contractor. The Authority has the option of notifying the successful low Bidder that the above noted material is available at the Authority for the Contractor to pick-up. The Contractor has 20 days following the Bid Opening to deliver to the Authority the signed Contract Documents, required bonds, insurance certificates, and other required information from the successful Bidder. Once these Documents are submitted to the Authority, the Authority will execute the Contract. If the Authority does not execute the Contract within 30 days of receipt of all the proper requested information, the successful Bidder may withdraw their bid without forfeiture of its Bid Guaranty or bidding eligibility. If the Authority and the successful Bidder agree in writing, an extension may be allowed.

103.5.4 Execution of Contract by Bidder

The first sentence is deleted and replaced with the following:

The properly completed and signed Contract Agreement form provided in the Contract Documents constitutes the Bidder's offer.

103.8 Execution of Contract by Department

This Subsection is deleted and replaced with the following:

The Contract will be awarded or Proposals rejected within twenty (20) days from the date of Proposal openings, except that by mutual written agreement between the Bidders and the Authority, the award may be withheld for any length of time. Any Bidder not agreeing to extend the award date shall be eliminated from the Bid List without prejudice, and their Bid Bond released.

The Contract shall not be binding until the Contract has been executed by the Authority, nor shall any Work be performed on account of the proposed Contract until the Contract has been fully executed and delivered.

SECTION 104 - GENERAL RIGHTS AND RESPONSIBILITIES

104.2.1 Furnishing of Right-of-Way

The first sentence is deleted and replaced with the following:

The Maine Turnpike Authority will secure all necessary rights to real property within the Project Limits shown on the Plans.

104.2.3 Authority of Project Manager and Resident

The following sentences are added:

The Resident is not responsible for supervising the construction Work and is not responsible for monitoring jobsite safety.

The Resident is not authorized to increase the obligation of the Authority to the Contractor, except as specifically set forth in the Specifications.

104.3.5 Duties Regarding Inspection of Work

The following paragraphs are added at the end of Paragraph A. Safe Access:

The Contractor shall furnish the Resident with every reasonable facility for ascertaining whether or not the Work is performed and the materials are furnished in accordance with the requirements and intent of the Contract. Such inspection may include mill, plant or shop inspection. If at any time before acceptance of the Work, the Resident requests it in writing, the Contractor shall remove or uncover such portion of the finished Work as directed. After examination, the Contractor shall restore said portions of the Work to the standards required by the Specifications. Should the Work exposed or examined meet the requirements of the Plans and Specifications, the uncovering or removing and the restoration of the uncovered Work shall be paid for as Extra Work except that no such payment will be made in those cases for which such removal is required by the Plans and Specifications as a part of the Work under the Project. Should the Work not meet the requirements of the Plans and Specifications, the uncovering or removing and restoration shall be at the Contractor's own expense. Any Work done or materials used without suitable supervision or inspection may be ordered to be removed and replaced by the Contractor without extra compensation.

No Work shall be done at night, on weekends, or legal holidays, without prior notice and approval of the Resident. No night Work shall be done until the Contractor has provided an adequate and sufficient source of artificial light to permit examination by the Resident of the suitability of the materials being used and the quality and character of the workmanship.

104.3.7 Laws to be Observed

This Subsection is amended by the addition of the following:

Any section of roadway open to the traveling public is a public way and subject to the applicable rules, regulations, and laws.

104.3.8 Wage Rates and Labor Laws

This Subsection is amended as follows:

A. Federal Wage Rates and Labor Laws is deleted and not replaced.

B. State Wage Rates and Labor Laws.

This Subsection is amended by the addition of the following:

This Contract is governed by the Prevailing Wage Provisions in Title 26, Chapter 15 of the Maine Revised Statutes Annotated. State Wage Rates, if applicable to the Contract, will be included in the Special Provisions.

Fair Minimum Wages

The hourly wage rate paid to laborers of the General Contractor and all Subcontractors shall not be less than the prevailing hourly rate of wages for Work of similar character in the State of Maine. The fair minimum hourly rates determined by the State of Maine Department of Labor for this Contract are included as part of this Contract.

A copy of the Wage Determination(s) shall be provided by the Contractor to all Subcontractors on the Project. In addition, the Wage Determination(s) must be kept posted at the Work site by the Contractor and by all Subcontractors at a prominent location, easily accessible by the workers. On a Project where there is no such location, a Contractor may comply with this requirement by providing each worker with a copy of the Wage Determination(s) within the first full day that the worker works on that Project. The Contractor must be able to document that each worker has received a copy of the Wage Determination(s).

Records

The Contractor and all Subcontractors shall keep an accurate record noting:

- The name and occupation of each and all laborers, workmen, and mechanics employed by them, and all independent Contractors working under Contract to them in connection to the Project;
- Number of hours worked;
- Title of the job;
- Hourly rate or other method of remuneration for the job; and,
- Actual wages or other compensation paid to each of the laborers, workmen, mechanics, and independent Contractors.

A copy of this record must be kept at the jobsite and shall be available at all reasonable hours to the inspection of the Bureau of Labor and/or the Maine Turnpike Authority, its officers and agents. These records must be preserved for a minimum of three (3) years after the completion of the Contract.

A copy of each record must be filed monthly with the Maine Turnpike Authority. This information shall be sent directly to the Maine Turnpike Authority, Director of Engineering and Building Maintenance, Attention: Wage Rate Records, 2360 Congress Street, Portland, ME 04102. The records shall note the Maine Turnpike Contract Number.

The Contractor and all Subcontractors are subject to penalties described in Title 26, Chapter 15 of the Maine Revised Statutes Annotated, for any violations of the Fair Minimum Wage Rates Policy for the State of Maine.

104.3.11 Responsibility for Property of Others

This Subsection is amended by the addition of the following:

The Contractor shall respond to all damage claims in writing, within 30 days, to the party making a damage claim. The response shall state that the Contractor accepts responsibility for the damage or outlines the reasons why the claim has been denied. If the Contractor has turned the claim over to their insurance agent or carrier, the name of the agent or carrier, along with the contact person, address and telephone information shall be included in the response to the claimant and a copy to the Authority. A standard form letter denying the claim without an explanation of the situation shall be unacceptable. A copy of the response letter shall be submitted to the Authority within the 30 day response time. The Authority shall review the response letter and will determine if the Contractor has replied in a responsive manner. If the Authority does not receive a response letter or action report from the Contractor within the 30 day response time, the Authority will determine if the Contractor is responsible for the claimed damage. If, in the absence of the Contractor's response or action report, the Authority deems the claim to be valid, the Authority will at its option pay the damage claim and deduct the amount of the claim from the Contractor. The Contractor will not be entitled to recoup these funds if their response was not transmitted within the 30 day response time. The Authority will not intervene in any claim actions where the Contractor's insurance carrier is conducting a valid, ongoing claim investigation.

104.3.14 Interpretation and Interpolation

The first sentence is change from "...and Geotechnical Information." to "...Environmental Information, and Geotechnical Information".

104.4.2 Preconstruction Conference

The following Matrix is added:

Project Decision Matrix

A Project "communication decision tree" will be developed mutually by the Authority and the Contractor during either the preconstruction meeting or partnering session. This Decision Matrix will clearly define, by descriptive job title and name, the respective counterparts for the Authority, and the Contractor who will be responsible for resolving issues at their respective levels of communication. Each level of communicators will be assigned a dollar magnitude of authority and a designated period of time within which all disputed issues must either be resolved or referred to the next higher level of communicators. The purpose of this Decision Matrix is to accelerate the resolution of decisions, to promote resolution at the lowest possible level, and to reduce the number of issues that become disputes.

The following is a sample of the Decision Matrix:

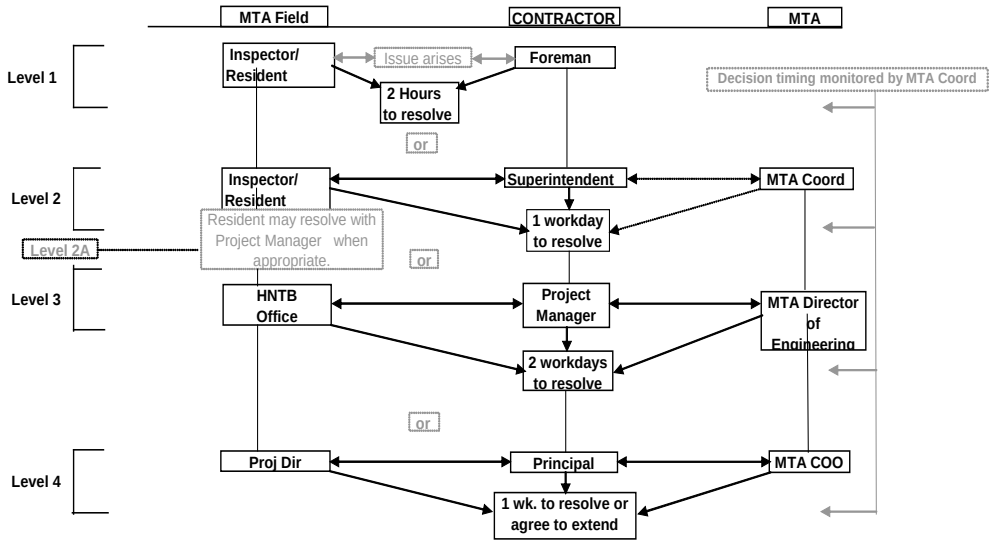

Level 5 **If an issue is not resolved at Level 4, the matter becomes a Dispute. Refer to Section 111**

Notes:

1) **Each project will enter names in all title boxes at Preconstruction or Partnering sessions.**
2) **Substitute names will be provided for all key decision levels.**
3) **Each decision level will be empowered with a maximum dollar guidance value.**
4) **Issues will automatically bounce up to next level if decision time limits are surpassed.**

104.4.5 Early Negotiation

The second paragraph in Part A is deleted and replaced with the following:

Such notice may not be verbal. Notice shall be in the form of a written memo with signatures representing both the Owner and Contractor or shall be in the form of meeting minutes within 14 days of the date that the issue became known. Meeting minutes shall not be valid documentation until they are accepted by the Resident and the Contractor.

Paragraph C, Additional Consideration, is deleted and not replaced. See related Subsection 104.4.2.

104.4.7 Cooperation With Other Contractors

This Subsection is amended by the addition of the following:

The Contractor shall cooperate with the Maine Turnpike Authority. The Authority reserves the right to conduct maintenance operations and to erect and remove traffic control devices as deemed necessary by the Authority or the Resident within or adjacent to the Project.

The Contractor shall note that other contracts may be awarded for Work adjacent to this Contract and these shall be considered adjacent contracts. The Contractor shall cooperate with other Contractors and the Resident so that all Work can be completed in a safe and timely manner. The Resident may direct the Contractor to revise the Work or schedule based on Work that is ongoing in the adjacent Contract. The Contractor's Superintendent or Project Manager shall attend coordination meetings with the Resident and the adjacent Contractors at least once every two weeks. All Contractors bear the full responsibility of cooperation and coordination with each other in the planning and scheduling of traffic closures, stoppages, and other construction activity. The Resident's responsibility for coordination is limited to the timely dissemination of all schedules and information submitted by adjacent Contractors. Neither the Resident, nor the Maine Turnpike Authority, shall bear any responsibility for costs resulting from a Contractor's failure to submit all information as required. Issues and concerns not presented for review and discussion at joint Contractor meetings will not later be cause for claims. This cooperation shall be completed at no additional cost to the Authority.

The Contractor working on an adjacent section may require the placement of temporary construction signs and traffic control devices within this Project area. The placement and maintenance of these devices by another Contractor shall be allowed in this Contract at no additional cost to the Authority.

104.4.10 Coordination of Bridge Closure/Bridge Width Restriction Notification

This Subsection is deleted and replaced with the following:

The Contractor shall notify the Authority a minimum of two (2) weeks prior to the date of closure/restriction with the date on which the closure/restriction will begin and the anticipated duration of the closure/restriction. The Authority will be responsible for notification to others.

104.5.9 Landscape Subcontractors

This Subsection is deleted and replaced with the following:

The Contractor shall retain only Landscape Subcontractors that are certified by the Maine Department of Transportation Environmental Office Landscape Unit.

SECTION 105 – GENERAL SCOPE OF WORK

Scope of Section

The second paragraph is deleted and replaced with the following:

This Contract is not federally funded.

105.1 Intent of the Contract

This Subsection is amended by the addition of the following:

The Plans and Specifications complement and supplement each other. Should any Work be required, which is not denoted on the Plans or in the Specifications because of an omission, but which is nevertheless necessary for the proper performance and completion of the Project, such Work shall be fully performed as if it were described and delineated. Should any misunderstanding arise as to the intent or meaning of said Plans and Specifications, refer to Subsection 104.4.4, Requests for Information.

The silence of the Specifications, Plans, or other supplemental documents as to any detail, or the apparent omission from them of a detailed description concerning any point, shall be regarded as meaning that only material and workmanship of excellent quality are to be used.

105.2.3 Joint Duty Regarding Safety

The first sentence is amended as follows:

The “Contractor’s TCP” is deleted and replaced with “Traffic Control Plan”.

This Subsection is amended by the addition of the following:

Nothing in the foregoing paragraphs shall be construed as relieving the Contractor from full responsibility for safe prosecution of the Work at all times. The Resident is not responsible for jobsite safety.

The following Subsection is added:

105.2.4.1 Lockout/Tagout Procedures

Prior to the start of Work, the Contractor and the Maine Turnpike Authority shall exchange and review the other party's Lockout/Tagout Procedures for the control of hazardous energy. If the Lockout/Tagout Procedures are similar and neither party has concerns, the two parties shall agree to abide by the procedures of the other party. Only the authorized individual who locked or tagged-out a circuit or piece of equipment is permitted to remove the lockout/tagout, except as provided for in the respective Lockout/Tagout Procedures.

Should either the Contractor or the Maine Turnpike Authority have concerns with the other party's Lockout/Tagout Procedures, the Safety Officers of the Contractor and the Maine Turnpike Authority shall meet, discuss and resolve the areas of concern. The Authority reserves the right to have the Contractor comply with the restrictions and prohibitions of the Maine Turnpike Authority's Lockout/Tagout Procedures if the Authority determines the Contractor's Lockout/Tagout Procedures are inadequate to protect the Authority's employees and patrons.

105.4.1 Maintenance During Construction

This Subsection is amended by the addition of the following:

Paved Surface - The Contractor is responsible for maintaining the existing paved shoulder, ramps, and travel lanes on the Maine Turnpike in good condition. The presence of tracked-dirt on the paved surfaces is unacceptable. The Resident shall have the sole authority to determine the acceptability of the paved surfaces. The use of stabilized construction entrances and frequent sweeping of the shoulder are the responsibility of the Contractor and shall be completed at no additional costs to the Authority.

Gravel Surface - The Contractor is responsible for maintaining gravel surfaces that are used for traffic in good condition. Potholes and wheel ruts are unacceptable. The Resident shall have the sole authority to determine the acceptability of the surfaces. Repairing the surfaces are the responsibility of the Contractor and shall be completed at no additional costs to the Authority.

Signs and Delineators - The Contractor is responsible for maintaining all mile markers, delineator, and signs including regulatory, warning, and guide signs during construction. Maintenance of signs shall mean that signs are clearly visible to motorists at the required height during construction. These items shall be kept in their existing location as long as is practicable. At no time shall any signs not be visible to the

driver. Construction material or equipment shall not obscure signs. This Work shall be accomplished at no additional cost to the Authority.

Erosion and Sedimentation Control - The Contractor shall plan their operations to protect existing Work from erosion. The Contractor is responsible for the inspection and maintenance of all erosion and sedimentation control devices until final acceptance. No payment will be made to repair failed areas if the Best Management Practices had not been utilized prior to a weather event.

105.4.3 Maintenance During Winter Construction

This Subsection is amended by the addition of the following:

The Maine Turnpike Authority will be responsible for winter maintenance including snow removal and application of salt on Maine Turnpike pavement open to traffic.

105.5.1 General Requirements

This Subsection is amended by the addition of the following:

Toll Free Passage on the Turnpike

The Contractor shall be granted free use of the turnpike for movement of vehicles, labor and equipment and for delivery of material essential to the Work. The Contractor will be issued cards with the Contract Number and Contractor Name while working on the Project. The cards shall be transferable and distributed by the Contractor to employees and vehicles working on the Project. The cards may only be used while working on the Project designated on the cards. Such free use shall be limited to the portion of the turnpike between the site of the Work and the nearest practicable exit including movement of vehicles, labor, equipment and materials from one site to another Work site. All vehicles must stop at a manned lane at the toll plazas to present the cards to the toll attendant. Vehicles without the required cards shall pay the required toll. This shall not be a reimbursable expense. The Contractor shall advise the Resident of the number of cards that are required. All cards shall be returned to the Resident at the completion of the Project. The use of the cards for toll free travel shall be revoked if the cards are misused. The Contractor shall nevertheless comply with regulations of the Authority relating to use of the turnpike and with established controls for non-revenue vehicles.

Existing Access

All existing access from local roads to the Maine Turnpike shall remain passable to emergency vehicles at all time. At no time shall construction equipment or material block these roads. Any misuse of this privilege will result in the Contractor's loss of access through these gates. The Contractor shall provide a lock and a piece of chain to link to the existing padlock on the gate allowing access to the Contractor and emergency vehicles.

Access From Local Roads

The Contractor shall not impact wetlands or streams to construct access to the Project. The Contractor may construct temporary access to the turnpike to facilitate the Project. Any damage caused to private property or local roads as a result of the access shall be repaired at the Contractor's own expense. The Contractor shall prepare a written plan outlining the proposed access.

At a minimum, the plan shall outline the following:

- Estimated number of vehicles;

- Time and duration of operation;
- Types of vehicles to use the access;
- Plans to construct a stabilized construction entrance;
- Plan to keep the local road free of tracked-mud and dust;
- Plan to control access to prevent unauthorized use;
- Restoration plan; and,
- Written permission from private property owners (if required).

The Contractor is required to retain the services of qualified flaggers to control the Contractor's operation at the local road access. Flaggers shall be present whenever construction vehicles are utilizing the access. The Contractor shall be responsible for constructing a gate across the access point to prohibit unauthorized access. The Contractor shall also construct a stabilized construction entrance in accordance with the MaineDOT Best Management Practices. All cost associated with the access including, but not necessarily limited to, the construction, restoration, flaggers, gate, and stabilized construction entrance shall be the responsibility of the Contractor. Failure to utilize flaggers will result in termination of permission to use local roads for access. Failure to keep local roads clear of tracked-mud will result in termination of permission to use local roads for access.

Construction Access

The Contractor shall construct a stabilized construction entrance in accordance with the Best Management Practices at all locations where construction vehicles will exit the mainline and/or enter the existing paved shoulder from a non-paved area. The Resident shall approve of the locations. The stabilized construction entrance shall be constructed in conjunction with the clearing activities or other early activities. Additional stabilized construction entrances may be required due to the Contractor's operations as well as site conditions. The construction and maintenance of the stabilized construction entrance shall be incidental.

Change of Direction

The Contractor will not be permitted to reverse directions (U-turns) at the toll plazas or at interchanges. All vehicles must exit the turnpike prior to reversing directions.

The Contractor shall not use the median openings on the turnpike unless the opening is located within passing lane closures on both roadways. The Contractor will be assessed a fine every time any employee of the Contractor, Subcontractor or supplier is observed using a median opening by a Resident or turnpike employee anywhere on the Maine Turnpike throughout the duration of the Contract. The fine will be deducted from monies owed to the Contractor.

The fines will be levied on a per occurrence basis as follows:

NUMBER OF OCCURRENCES	FINE
First	$100

For the second occurrence, and any occurrence thereafter, the fine is increased by $100 per each occurrence. The number of occurrences is not specific to a Contract, an individual or a vehicle, but based solely on the number of times any employee of the Contractor, Subcontractor or supplier is observed using a median opening anywhere on the Maine Turnpike. The Contractor shall be notified in writing of the violation by the Authority.

105.6 Construction Surveying

This Subsection is deleted in its entirety and replaced with the following:

105.6.1 Authority Provided Services

The Authority will provide the Contractor with the description and coordinates of vertical and horizontal control points, set by the Authority, within the Project Limits, for full construction Projects and other Projects where survey control is necessary. For Projects of 1,500 feet in length, or less: The Authority will provide three points. For Projects between 1,500 and 5,000 feet in length: The Authority will provide one set of two points at each end of the Project. For Projects in excess of 5,000 feet in length: The Authority will provide one set of two points at each end of the Project, plus one additional set of two points for each mile of Project length. For non-full construction Projects and other Projects where survey control is not necessary, the Authority will not set any control points and, therefore, will not provide description and coordinates of any control points: Upon request of the Contractor, the Authority will provide the Authority's survey data management software and Survey Manual to the Contractor, or its survey Subcontractor, for the exclusive use on the Authority's Projects.

105.6.2 Contractor Provided Services

Utilizing the survey information and points provided by the Authority, described in Subsection 105.6.1, Authority Provided Services, the Contractor shall provide all additional survey layout necessary to complete the Work. This may include, but not necessarily be limited to, reestablishing all points provided by the Authority, establishing additional control points, running axis lines, providing layout and maintenance of all other lines, grades, or points, and survey quality control to ensure conformance with the Contract. The Contractor is also responsible for providing construction centerline, or close reference points, for all utility facility relocations and adjustments as necessary to complete the Work. When the Work is to connect with existing structures, the Contractor shall verify all dimensions before proceeding with the Work. The Contractor shall employ or retain competent engineering and/or surveying personnel to fulfill these responsibilities.

The Contractor must notify the Authority of any errors or inconsistencies regarding the data and layout provided by the Authority as provided by Subsection 104.3.3, Duty to Notify Department If Ambiguities Discovered.

105.6.2.1 Quality Control

The Contractor is responsible for all construction survey quality control. Construction survey quality control is generally defined as, first, performing initial field survey layout of the Work and, second, performing an independent check of the initial layout using independent survey data to assure the accuracy of the initial layout; additional iterations or checks may be required if significant discrepancies are discovered in this process. Construction survey layout quality control also requires written documentation of the layout process such that the process can be followed and repeated, if necessary, by an independent survey crew.

105.6.3 Quality Assurance

It is the Authority's prerogative to perform construction survey quality assurance. Construction survey quality assurance may or may not be performed by the Authority. Construction survey quality assurance is generally defined as an independent check of the construction survey quality control. The construction survey quality assurance process may involve physically checking the Contractor's construction survey layout using independent survey data, or may simply involve reviewing the construction survey quality control written documentation. If the Authority elects to physically check the

Contractor's survey layout, the Contractor's designated surveyor may be required to be present. The Authority will provide a minimum notice of 48-hours to the Contractor, whenever possible, if the Contractor's designated surveyor's presence is required. Any errors discovered through the quality assurance process shall be corrected by the Contractor, at no additional cost to the Authority.

105.6.4 Boundary Markers

The Contractor shall preserve and protect from damage all monuments or other points that mark the boundaries of the right-of-way or abutting parcels that are outside the area that must be disturbed in order to perform the Work. The Contractor indemnifies and holds harmless the Authority from all claims to reestablish the former location of all such monuments or points including claims arising from 14 MRSA § 7554-A. For a related provision, see Subsection 104.3.11, Responsibility for Property of Others.

105.7.1 General

The following paragraphs are added:

Within ten (10) days after the date of execution of the Contract, the Contractor shall inform the Resident in writing of the sources from which he proposes to obtain the materials required for the Project and statements of quality of these materials as hereinafter required in Subsection 106.01, Roles Regarding Quality. Information or materials not required to be incorporated in the Work within six (6) months after said date of execution, may be furnished within thirty (30) days.

Prior to the approval of the submittal, any Work done or materials ordered shall be at the Contractor's own risk. All submittals shall be stamped and signed by the Contractor verifying their approval of the Shop Drawings.

Prior to forwarding submittals to the Resident for review and approval, the Contractor shall mark the Item Number on each submittal for identification, thoroughly check the submittals for compliance with the Contract Documents, and place its stamp of approval on each sheet certifying that the Contractor has so checked each submittal. The Contractor shall certify that "This Shop Drawing has been thoroughly checked and complies with the Contract Documents and field measurements and the item fits with adjoining Work except as noted". Submittals which do not contain this stamp of approval and certification, or which are incomplete, have not been checked, have been checked only superficially, or contain numerous errors, will be returned un-reviewed by the Resident for resubmission by the Contractor. Delays in obtaining approvals, other than those caused by the Authority, are not grounds for granting an extension of time. Disclaimers by the Contractor, any Subcontractor, or supplier of responsibility for any requirements of the Contract Documents, will not be accepted by the Authority and will be deemed invalid.

The following submissions are required if applicable to the Work:

- Construction plans for access
- Project master schedule
- Updated schedules as required
- Shop Drawings
- Spill Prevention Control and Countermeasure (SPCC) Plan
- Traffic control plans
- Temporary earth support system submission
- Bridge beam or structural steel erection plan

105.7.4 Submittal Requirements

The second paragraph is deleted and replaced with the following:

For the first and subsequent submittals, the Contractor shall submit a minimum of seven (7) sets of drawings to the Resident on the size sheets required unless otherwise directed by the Resident.

105.8.1 Temporary Soil Erosion and Water Pollution Control

This Subsection is amended by the addition of the following:

Spill Prevention Control and Countermeasure (SPCC) Plan

Any areas where petroleum products, oils or hazardous materials are handled or stored will require a Spill Prevention Control and Countermeasure (SPCC) Plan. The Plan will be submitted to the Resident before construction begins for review and approval. At a minimum, the Plan shall provide the following information:

1. Name of person who is responsible for spill prevention;

2. Description of handling or storage location, noting setbacks from water bodies where relevant. Significant sand and gravel aquifers and other sensitive resources must be avoided wherever possible;

3. Description of storage and containment facilities;

4. Description of equipment and/or materials used to prevent discharges (including sorbent materials);

5. Preventative measures to minimize the possibility of a spill; and,

6. Contingency plan if spill should occur.

The approved plan must be posted at the jobsite. All personnel working in the area are required to read and be familiar with the plan.

There shall be no separate payment for preparation of a SPCC Plan acceptable to the Resident and preparation is considered incidental to the Work.

ENVIRONMENTAL STANDARDS

The Project will be performed in accordance with the MaineDOT Best Management Practices (BMP) latest issue. The Contractor shall fully comply with all erosion and sedimentation control requirements outlined in the BMP's or contained herein. Non-compliance with these requirements as determined by the Resident shall result in a financial penalty of $1,000 per day, per violation. Any fines assessed to the Maine Turnpike Authority as a result of the Contractor's non-compliance shall be paid by the Contractor. If the Contractor fails to pay, the cost of the fine will be deducted from monies due, or which may become due to the Contractor under this Contract.

In the event of conflict between these Specifications and other erosion and pollution control laws, rules or regulations of other Federal, State and local agencies, the more restrictive law, rules or regulations shall apply.

The standards as described below shall be met on the Project:

1. Temporary erosion control measures shall be maintained until the site is permanently stabilized with vegetation or other permanent control measures.

2. The Contractor will immediately take appropriate measures to prevent erosion or sedimentation from occurring or to correct any existing problems regardless of the time of year.

3. Work in wetlands is prohibited except to the minimum extent necessary for completion of the Work as detailed on the Plans. Excavated and other material shall not be stockpiled in wetlands. Haybales, silt fence or other suitable barriers shall be used, where necessary, to prevent sedimentation from eroding materials.

4. Uncured concrete shall not be placed directly into the water body. Concrete may be placed in forms and shall cure at least one (1) week prior to form removal. No washing of tools, forms, etc. shall occur in or adjacent to the water body or wetland. Any additional requirements are outlined in Subsection 107.261 of the Special Provisions.

5. Disturbance of natural resources beyond the construction limits shown on the Plans is not allowed.

6. Bare earth slopes shall be roughened to dissipate sheet flow. This shall be accomplished by "tracking" the slope perpendicular to the centerline. No bare earth shall be maintained for more than five days without surface roughening. This Work will not be measured separately for payment, but shall be incidental to the Excavation item.

7. No wheeled or tracked equipment shall be operated in the water. Equipment operating on the shore may reach into the water with a bucket or similar extension. Equipment may NOT cross streams.

8. Existing ditches shall be maintained until the new ditches are stabilized. Stone check dams shall be placed in existing ditches prior to construction as to prevent the release of sedimentation. Stone check dams shall be installed at the outlets of all existing and proposed ditches adjacent to all stream and wetlands.

9. The Contractor's operation may require the placement of temporary pipes and fill over a ditch line to provide access to the Work area. The Resident shall approve the size of the pipe. The placement and removal of the temporary access will not be measured separately for payment, but shall be incidental to the Excavation item.

105.10 Equal Opportunity and Civil Rights

105.10.1 Requirements Applicable to Federally Funded Contracts

This Subsection is deleted and not replaced.

105.10.2 Requirements Applicable to All Contracts

The following is added after Paragraph (A), Maine Code of Fair Practice and Affirmative Action, Paragraph 4).

The Maine Turnpike Authority is an equal opportunity employer and as such, requires all Contractors to pursue in good faith affirmative action programs.

THEREFORE;

The Contractor hereby agrees to the following requirements:

1. The Contractor will pursue an affirmative action program which includes procedures designed to increase the numbers of minorities, women, and handicapped at all levels and in all segments of the workforce where imbalances exist. Such a program should include an assessment of the existing situation, and the development of realistic goals for necessary actions. These goals and related procedures and timetables should not require rigid quotas but are commitments which the Contractor should make every good faith effort to achieve.

2. In connection with Contracts in excess of $250,000, the Contractor will insure contractually that all Subcontractors shall also pursue an affirmative action program meeting the above requirements. The Contractor shall also ensure contractually that all Subcontractors with Contracts in excess of $50,000 pursue an affirmative action program meeting the above requirements.

3. An affirmative action program will provide that no Contractor and/or Subcontractor will discriminate against an employee or applicant for employment because of race, color, religious creed, sex, national origin, ancestry, age, physical handicap or mental handicap unless based upon a bona fide occupational qualification. Such action shall include, but not necessarily be limited to, the following; employment, upgrading, demotions, transfers, recruitment or recruitment advertising, layoffs or terminations, rates of pay and compensation, and selection for training and apprenticeship.

Paragraph (D), Prevention of Sexual Harassment, is deleted and replaced with the following:

Contractors are responsible, under Maine State Law, for ensuring and maintaining a Work environment that is free from sexual harassment. The Contractor shall comply with all relevant provisions of Maine State Law in regard to sexual harassment including, but not necessarily limited to, 5 MRSA 4572, 26 MRSA 806-807, and the regulations of the Maine Human Rights Commission.

Subsections 105.10.2 (E), DBE Reporting Requirements, and (F), Certification of Continuing EEO Efforts, are deleted and not replaced.

105.11 Other Federal Requirements

This Subsection is deleted in its entirety and not replaced.

The following Subsection is added:

105.12 Limitations of Operations

The Contractor shall keep the existing shoulder clear of construction activity except for the period of shoulder reconstruction. The Contractor shall not park or store construction equipment, vehicles, or materials on the shoulder. Construction vehicles shall not enter the mainline travel lane until they can safely merge with the traffic in the travel lane. The construction access shall be in accordance with the details in the Plans. The Resident must approve all shoulder closures.

Existing drainage shall be maintained at all times. All ditches that discharge into wetlands shall have a series of stone check dams installed in the ditch near the outlet prior to the commencement of clearing activities in the area.

SECTION 106 – QUALITY

106.3.3 Sources

Paragraph A, General, is amended by the addition of the following:

Preference in the purchase of supplies and materials, other considerations being equal, shall be given in favor first of supplies and materials manufactured and sold within the State of Maine, and second, of supplies and materials manufactured within the United States. Materials and supplies sold outside the United States will be considered third in the preference order.

106.3.4 Storage

This Subsection is amended by the addition of the following:

The Contractor shall be responsible for the security of all storage areas. Materials and supplies that are stolen, damaged or otherwise made unacceptable while in storage shall be replaced in kind at the Contractor's own expense.

106.3.7 Sampling and Testing

The forth paragraph is deleted in its entirety and not replaced.

106.6 Acceptance

All paragraphs after the first paragraph are deleted and not replaced.

106.8.3 Unauthorized Work

The following paragraphs are added:

No omission or failure on the part of the Resident to disapprove or reject any Work or material shall be taken to be an acceptance of any defective Work or material. Within the time set by the Resident, the Contractor shall remove any Work or material condemned by the Resident and shall rebuild and replace the same without extra compensation and in default thereof the removal and replacement may be done by the Authority at the expense of the Contractor; or, in case the Resident should not consider the defect of sufficient importance to require the Contractor to rebuild or replace any imperfect Work or material, he shall have power, and is hereby authorized, to make an equitable deduction from the Contract price.

Materials which do not conform to the requirements of these Specifications shall be considered as defective and will be rejected, whether in place or not, and shall be removed from the Project. No material which has been rejected, the defects of which have been corrected or removed, shall be used until approved by the Resident in writing.

SECTION 107 – TIME

The following Subsection is added:

107.1.1 Substantial Completion

An 80 percent reduction of retainage will be considered by the Authority when the Project is substantially complete. The Contractor shall include an explanation of the outstanding Work, an estimate of the cost to complete the Work, and a schedule for completing the Work. Seasonal limitations as well as warranty and establishment periods (for vegetation) shall be addressed.

107.3.1 General

This Subsection is amended as follows:

See related Subsection 101.2, Definitions: Holidays.

Work that impacts traffic may be subjected to further restrictions. See related Special Provision Section 652.

107.3.2 Night Work

This Subsection is amended by the addition of the following:

- The Maine Turnpike encourages the Contractor to construct the Project cost effectively while maintaining quality and conformance with all Federal, State and local laws. To facilitate this process, the Maine Turnpike recognizes that the Contractor may choose to construct portions of the Project at night.
- The following is a partial list of activities that would be favorably considered for night construction. The final determination of applicability by the Authority will be based on the Contractor's plan of operation. The Contractor shall demonstrate that the Work can be accomplished in conformance with the appropriate regulations.

Highway Related Work

- Installation and removal of traffic control devices (drums, concrete barrier, impact attenuators)
- Installation and removal of painted pavement markings
- Placement of pavement
- Sawcutting of pavement
- Installation and removal of guardrail

Bridge Related Work

- Delivery of materials (except oversize loads)
- Placement and removal of pier forms
- Shielding of old and new bridge
- Installation and removal of deck and diaphragm forms
- Installation and removal of overhang brackets
- Field painting and preparation of damaged paint areas
- Application of penetrating sealers
- Installation of sign panels on sign bridges

107.3.3 Sundays and Holidays

This Subsection is amended by the addition of the following:

"Saturday" is added before Sunday.

Requests to work outside of the allowable periods must be submitted in writing and approved by the Resident prior to the start of Work. Approval for Work, that in the Authority's opinion will not significantly impact traffic flow, will not be unreasonably withheld.

107.4.2 Schedule of Work Required

This Subsection is amended by the addition of the following:

No Pay Requisition will be approved for payment until the schedule requirement is fulfilled and accepted by the Maine Turnpike Authority.

In addition to the Schedule required hereinbefore, the Contractor shall submit, no later than 12:00-noon every Thursday, a detailed plan of his operations for the following week. This plan shall show the type of Work to be done and the traffic lanes that are to be impacted. This updated plan will be used by the Resident to schedule the appropriate resources and inform other interested parties of the proposed Work.

107.4.4 Schedule Revisions

This Subsection is amended by the addition of the following:

The progress of Work shall be compared against the Schedule of Work at a job meeting once every month. If the Authority determines that the Contractor's actual progress is not in substantial conformity with the Schedule of Work, then the Contractor shall submit a revised Schedule of Work to the Authority depicting the increased or decreased variations in activity durations and milestones as compared to previously submitted schedule(s). If noted in the meeting minutes, or directed in writing by the Resident, the Contractor shall submit a revised Schedule to the Authority within one week of the request. If a revised realistic Schedule is not received within one week of the request, the monthly pay requisition will be withheld. Failure to modify completion dates without a commitment to modify Project resources shall be deemed an unrealistic Schedule unless the particular activity had adequate float.

107.7.2 Schedule of Liquidated Damages

The table of liquidated damages is deleted and replaced with the following:

Original Contract Amount From More Than	Original Contract Amount up to and Including	Amount of Liquidated Damages per Calendar Day
$0	$100,000	$100
$100,000	$300,000	$200
$300,000	$500,000	$400
$500,000	$1,000,000	$575
$1,000,000	$2,000,000	$750
$2,000,000	$4,000,000	$900
$4,000,000	and more	$1,875

This Subsection is amended by the addition of the following:

At the option of the Authority, the Contractor may be held responsible for all costs incurred by the Authority which are due to any Work that remains incomplete after the time specified for the completion of the Contract, in addition to the daily calendar day charge.

107.9.1 Final Clean-up and Finishing

This Subsection is amended by the addition of the following:

No separate payment will be made for final clean-up and restoration of property, but the cost thereof shall be included in the prices bid for the various items scheduled in the Proposal.

SECTION 108 - PAYMENT

108.1 Measurement of Quantities for Payment

This Subsection is amended by the addition of the following:

The quantities in the Schedule of Items are the approximate totals. The breakdown of quantities for various locations is approximate and is for information only. No change in the bid price will be considered for changes in the actual quantities at each location except as provided for in Subsection 109.1, Changes in Quantities.

108.1.2 General Measurement Provisions

The first sentence is deleted and replaced with the following:

The Maine Turnpike Authority will utilize the U.S. Customary system for all units of measurement.

108.1.3 Provisions Relating to Certain Measurements

This Subsection is amended by the addition of the following:

No allowance will be made for surface laid over a greater area than indicated on the Plans or otherwise authorized, or for excavation removed or embankment placed beyond the slope lines shown on the cross-sections, except as otherwise specifically noted or authorized by the Resident in writing.

108.2.1 Generation of Progress Payment Estimates

The first paragraph is deleted and replaced with the following:

The Resident will make current estimates in writing once each month, on or before the date set by the Resident at the time of starting Work, or from time to time as the Work progresses. Progress payments twice per month will not be allowed. The estimate shall include all materials complete in place and the amount of Work performed in accordance with the Contract, during the preceding month or period and the value thereof figured at the unit prices contracted together with estimates of the cost of Extra Work performed during the same period. Estimates or payments will not be made, if in the opinion of the Resident, the Work is not proceeding in accordance with the provisions of the Contract. The Contractor agrees to waive all claims relating to the timing and amount of such estimates.

108.2.2 Payment

The first two sentences are deleted and replaced with the following:

The Maine Turnpike Authority will make payment within 30 days of Contractor and Resident concurrence of progress payment.

108.2.3 Mobilization Payments

The second paragraph is deleted and replaced with the following:

A. The first payment of 50 percent of the lump sum price for mobilization or five percent of the original Contract Amount, whichever is less, will be made with the first monthly estimate.

B. The second payment of 25 percent of the lump sum price for mobilization or 2.5 percent of the original Contract Amount, whichever is less, will be made following completion of 25 percent of the proposed Contract Amount.

C. The third payment of 25 percent of the lump sum price for mobilization or 2.5 percent of the original Contract Amount, whichever is less, will be made following completion of 50 percent of the proposed Contract Amount.

D. Upon substantial completion of the Work on the Project, as determined by the Resident, payment of any amount bid for mobilization in excess ten percent of the original Contract Amount will be paid.

All payments are subject to standard retainage.

Demobilization will not be measured separately for payment, but shall be incidental to Item 659.10, Mobilization.

108.3 Retainage

This Subsection is deleted and replaced with the following:

From the total of the amounts so ascertained there will be deducted an amount equivalent to 7.5 percent of the whole, to be retained by the Authority until after the completion of the entire Contract in an acceptable manner, and the balance, or a sum equivalent to 92.5 percent of the whole shall be certified by the Resident to the Authority for payment.

If it became evident, on the basis of approved progress schedules, or otherwise, that the completion date for the Contract will not be met, the Authority reserves the right to retain the amount of the liquidated damages which have apparently accumulated, in addition to 7.5 percent of the value of the Work done to date.

If at any time there shall be evidence of any lien or claim for which, if established, the Authority might become liable and which is chargeable to the Contractor, the Authority shall have the right to retain out of any payment, then due or thereafter to become due, an amount sufficient to completely indemnify the Authority against such lien or claim.

If the Contractor elects to furnish to the Authority a surety bond in the amount of twice the amount of all liens or claims pending against the Contractor, then the Authority will not exercise the aforementioned right to make retention out of payments on account of such liens or claims.

The payment of any current estimates or of any retained percentages shall in no way affect the obligations of the Contractor to repair or renew any defective parts of the construction and to be responsible for all damage due to such defect.

All material estimates and payments shall be subject to correction in subsequent partial estimates and payments and on the final estimate and payment.

108.4 Payment for Materials Obtained and Stored

The first paragraph is amended as follows:

In the second sentence, the words "...Delivered on or near the Work site at acceptable storage places." are deleted and not replaced.

108.4.1 Price Adjustment for Hot Mix Asphalt

This Subsection is deleted and replaced with the following:

For Contracts containing an excess of 5,000 tons of bituminous pavement, an asphalt price adjustment will be made for all bituminous concrete placed six (6) months after the bid date of the Contract. No asphalt price adjustment will be allowed for Contracts containing less than 5,000 tons. For Contracts containing more than 5,000 tons, no adjustment will be made for asphalt placed at any time within six months of the bid date.

Price adjustment will be based on the variance in cost for the performance-graded binder component of the hot mix asphalt. The quantity of hot mix asphalt for each pay item will be multiplied by performance graded binder given in the table below, times the difference in price in excess of ten percent between the base price and the period price of asphalt cement. Adjustments will be made upward or downward, as prices increase or decrease. The quantity of Hot Mix Asphalt will be determined from the quantity shown on the progress estimate for each pay period. The base price of performance graded binder to be used is the price per standard ton current with the bid opening date. The period price shall be determined by the Authority and shall be the price per standard ton current with the ending date of the progress estimate. The prices shall be determined by using the average N.E. Barge Price, FOB, as listed in the Asphalt Weekly Monitor.

Plant Mix B Pavement	4.0%
Hot Bituminous Pavement Grading B	4.5%
Hot Bituminous Pavement Grading C	5.5%
Hot Bituminous Pavement Grading D	5.5%
Hot Bituminous Pavement Grading E	5.5%

108.5 Right to Withhold Payment

This Subsection is amended by the addition of the following:

L. Contractor's failure to, or refusal to, remove within 24-hours after receipt of proper notice, any employee or person engaged in Work under Contract.

M. Contractor's failure to submit required schedule or schedule updates.

108.6 Taxes, Fees, Allowances, and Notices

This Subsection is amended by the addition of the following:

The Maine Turnpike Authority, an agency of the State of Maine, is exempt from payment of sales tax, under the present Maine Sales Tax Law, on any property purchased by it at retail for consumption. The Maine Tax Bureau has interpreted this to mean that all materials purchased by the Contractor which ultimately remain the property of the Maine Turnpike Authority, even though in a changed form, are not subject to the sales tax.

108.8 Final Payment

This Subsection is amended by the addition of the following:

Before final payment is made, the Contractor shall furnish to the Authority, on the forms prescribed (Sheet F-1), a sworn affidavit to the effect that no claims are pending. If such affidavit that claims have been paid cannot be given because of a dispute as to the amount or legality of such claim, the Contractor's affidavit shall clearly set out the facts as to the name, address, amount, and nature of the dispute. The Authority will review the matter and will make payment that the Authority deems is appropriate to the Contractor.

SECTION 109 – CHANGES

109.1.1 Changes Permitted

The following is added to the end of the paragraph:

There will be no adjustment to Contract Time due to an increase or decrease in quantities, compared to those estimated, except as addressed through Contract Modification(s).

109.1.2 Substantial Changes to Major Items

The following is added to the end of the paragraph:

Contract Time adjustments may be made for substantial changes to Major Items when the change affects the Critical Path, as determined by the Authority.

109.3 Extra Work

The following paragraphs are added:

No Extra Work shall be performed except pursuant to the written orders of the Resident, expressly and unmistakably indicating its intention to treat the Work described therein as Extra Work.

If the Contractor determines that Work directed by the Resident is Extra Work, he shall, within 48-hours, give written notice thereof to the Resident stating why he deems it to be Extra Work and shall furnish to the Resident daily time slips and memoranda for the purpose of affording to the Authority an opportunity to verify the Contractor's claim at the time and (if it desires to do so) cancel promptly such order, direction or requirement of the Resident.

Accordingly, the failure of the Contractor to serve such notice or to furnish such time slips and memoranda shall be deemed to be a conclusive and binding determination on his part that the direction,

order or requirement of the Resident does not involve the performance of Extra Work, and shall be deemed to be a waiver by the Contractor of all claims for additional compensation or damages by reason thereof.

Refer to related Subsections 104.4.2, Preconstruction Conference, and 109.7.5, Force Account Work.

109.4 Differing Site Conditions

109.4.1 Definition

This Subsection is amended by the addition of the following:

Paragraph (A) is the definition of Differing Site Conditions. Paragraphs (B), (C) and (D) are not all required along with Paragraph (A) to prove Differing Site Conditions. However, they will be considered by the Maine Turnpike Authority as part of the evaluation of Differing Site Conditions. See related Subsection 102.3, Examination of Documents, Site, and Other Information.

109.4.4 Investigation / Adjustment

This Subsection is amended as follows:

In the third sentence, delete the words "Subsections (A) - (E)".

109.5.1 Definitions - Types of Delays

This Subsection is amended as follows:

B. Compensable Delay -

Replace (1) with the following:

1(A) a weather related Uncontrollable Event of such an unusually severe nature that a Federal Emergency Disaster is declared. The Contractor will only be entitled to an Equitable Adjustment if the Project falls within the geographic boundaries prescribed under the disaster declaration.

1(B) a weather related Uncontrollable Event of such an unusually severe nature that the Contractor's critical path schedule is disrupted.

109.5.2 Entitlement to Adjustments

This Subsection is amended as follows:

A. Types of Adjustments -

Paragraph 2. is deleted and replaced with the following:

2. If a Compensable Delay 1(A), (2), or (3), the Contractor is entitled to an extension of time and an equitable adjustment as set forth in Subsection 109.7, Equitable Adjustment to Compensation. If a Compensable Delay 1(B), the Contractor is entitled to an extension of time and an equitable adjustment as set forth in Subsection 109.7, Equitable Adjustment to Compensation, except that Cost of extended jobsite overhead and time will not be allowed.

109.5.5 Documenting the Delay and Request for Adjustments

The last paragraph is deleted and replaced with the following:

The Authority may require that all cost shown in the report be certified by an accountant.

109.5.6 Decision by Program Manager

This Subsection is deleted and not replaced.

Refer to related Subsection 104.4.2, Preconstruction Conference.

109.5.7 Additional Consideration by Department

This Subsection is deleted and not replaced.

Refer to related Subsection 104.4.2, Preconstruction Conference.

109.6.1 Overview - General Requirements

This Subsection is amended by the addition of the following:

The Maine Turnpike will not participate in any costs borne by the Contractor that are not in accordance with Maine Turnpike policies. All money paid to a business or resident as compensation for impacts created by the Contractor's operation will not be reimbursed by the Authority. All Contractor costs must be documented. Monies paid by the Contractor to others must be documented by a receipt for the cost to be considered as part of the VECP. Copies of all receipts shall be submitted to the Resident.

109.7.2 Basis of Payment

This Subsection is deleted in its entirety and replaced with the following:

Equitable Adjustments will be established by mutual Agreement for compensable items listed in Subsection 109.7.3, Compensable Items, based upon Unit or Lump Sum Prices. If Agreement cannot be reached, the Contractor shall accept payment on a Force Account basis as provided in Subsection 109.7.5, Force Account Work, as full and complete compensation for all Work relating to the Equitable Adjustment.

109.7.3 Compensable Items

This Subsection is deleted and replaced with the following:

The Contractor is entitled to compensation for the following items, with respect to agreed upon Unit or Lump Sum Prices:

1. Labor expenses for non-salaried workers and salaried foremen.

2. Costs for Materials.

3. A markup on the totals of Items 1 and 2 of this Subsection (109.7.3) for home office overhead and profit of the Contractor, its Subcontractors and suppliers, and any lower tier Subcontractors or suppliers, with no mark-ups on mark-ups.

4. Cost for Equipment, based on Blue Book Rates or leased rates, as set forth in Subsection 109.7.5(C), or the Contractor's Actual Costs.

5. Costs for extended jobsite overhead.

6. Time.

7. Subcontractor quoted Work, as set forth below in Subsection 109.7.5, Force Account Work.

109.7.5 Force Account Work

This Subsection is amended by the addition of the following:

C. Equipment

When the Contractor is paid for furnishing and operating equipment on an hourly or daily basis, it shall be operated as approved by the Resident in such a manner as to obtain maximum production under the prevailing conditions. The Resident may order the removal and require replacement of any unsatisfactory equipment.

The first sentence of the second paragraph, which begins: "Equipment leased...", is deleted.

The second sentence of the sixth paragraph is changed from "The Contractor may furnish..." to read "If requested by the Authority, the Contractor will produce cost data to assist the Authority in the establishment of such rental rate, including all records that are relevant to the Actual Costs including rental Receipts, acquisition costs, financing documents, lease Agreements, and maintenance and operational cost records."

The following sentence is added:

Equipment leased by the Contractor for Force Account Work and actually used on the Project will be paid for at the actual invoice amount plus 10 percent markup for administrative costs.

The following sentence is added:

F. Subcontractor Quoted Work - When accomplishing Force Account Work that utilizes Subcontractor quoted Work, the Contractor will be allowed a maximum markup of five percent for profit and overhead.

SECTION 110 - INDEMNIFICATIONS, BONDING AND INSURANCE

110.2.1 Bonds

The first three paragraphs are deleted and replaced with the following:

The Bidder to whom the Contract is awarded shall furnish a Surety Corporation Bond, satisfactory to the Authority, on the form of the Contract Bond bound herewith, as security for the faithful performance of the Work. The Contract Bond must be executed or countersigned on the part of such Surety by the Resident Agent of the Surety for the State of Maine.

The Bond shall be in an amount not less than the Total Amount bid in the Proposal and shall be maintained by the Contractor until the final payment under the Contract is made. In the event of insolvency

of the Surety, the Contractor shall forthwith furnish and maintain as above provided, other security satisfactory to the Authority.

If the Contractor is unable to continue the Work, then the completion of the Contract shall be the sole responsibility of the Surety. The Surety shall assume the role of and become the Contractor. Work shall not commence until the Authority has approved, in writing, the Subcontractor's employed by the Surety. All Work to complete the Contract will be paid for at Contract bid prices as shown on the Proposal bid sheets. All payments made by the Authority will be paid directly to the Surety who in turn will then pay the Subcontractors and suppliers. Regardless of the amounts previously paid to the Contractor as Progress Estimates for Work reported to have been put in place by the Contractor or his Subcontractors, the full Scope of the Contract Work shall be completed by the Surety and its designates for compensation not to exceed the Contract Price less the aggregate of prior payments to the Contractor.

110.2.3 Bonding for Landscape Subcontractors

This Subsection is deleted and replaced with the following:

110.2.3 Bonding for Landscape Establishment Period

The Contractor shall provide a signed, valid, and enforceable Performance, Warranty, or Maintenance Bond complying with the Contract, to the Department at Final Acceptance.

The Bond shall be in the full amount for all Pay Items for Work pursuant to Section 621, Landscape, made payable to the Maine Turnpike Authority.

The Contractor shall pay all premiums and take all other actions necessary to keep said Bond in effect for the duration of the Landscape Establishment Period as described in Special Provision 621.0036, Establishment Period. If the Surety becomes financially insolvent, ceases to be licensed or approved to do business in the State of Maine, or stops operating in the United States, the Contractor shall file new Bonds complying with this Subsection and within 10 days of the date the Contractor is notified or becomes aware of such change.

All Bonds shall be procured from a company organized and operating in the United States, licensed or approved to do business in the State of Maine by the State of Maine Department of Business Regulation, Bureau of Insurance, and listed on the latest Federal Department of the Treasury listing for "Companies Holding Certificates of Authority as Acceptable Sureties on Federal Bonds and as Acceptable Reinsuring Companies."

By issuing a Bond, the Surety agrees to be bound by all terms of the Contract, including those related to payment, time for performance, quality, warranties, and the Department's self help remedy as provided in Subsection 112.1, Default, to the same extent as if all terms of the Contract are contained in the Bond(s).

Regarding claims related to any obligations covered by the bond, the Surety shall provide, within 60 Days of Receipt of written notice thereof, full payment of the entire claim or written notice of all bases upon which it is denying or contesting payment. Failure of the Surety to provide such notice within the 60-day period constitutes the Surety's waiver of any right to deny or contest payment and the Surety's acknowledgment that the claim is valid and undisputed.

110.3 Insurance

This Subsection is amended by the addition of the following:

Each policy shall be signed by the President and Secretary of the insurance company and shall be countersigned by a licensed Resident Agent of the State of Maine as an authorized representative of the company.

Before Work is commenced pursuant to the Agreement, the Contractor shall file with the Authority a Certificate of Insurance, executed by an insurance company or companies satisfactory to the Authority and licensed or approved by the State of Maine Department of Business Regulation, Bureau of Insurance to do business in the State of Maine, stating that the Contractor carries insurance in accordance with the requirements of the Contract.

If at any time, any of the said policies shall be or become unsatisfactory to the Authority, the Contractor shall promptly obtain new and satisfactory policies and furnish certificates therefor as required above. All policies shall contain a valid provision or endorsement providing that the insurance company will notify the Authority in writing at least thirty (30) days prior to the termination of any policy or before any changes are made in any policies. The policy shall also indicate which exclusions have been deleted and any additional coverages.

Neither approval by the Authority, nor a failure to disapprove insurance furnished by a Contractor, shall release the Contractor of full responsibility for liability, damages and accidents as set forth herein.

No separate payment shall be made for any insurance that the Contractor may be required to carry, but all costs thereof shall be included in the prices bid for the various items scheduled in the Proposal.

The following Subsection is added:

110.3.05 Umbrella Liability

An Umbrella Liability Policy in excess of Employer's Liability, General Liability, and Automobile Liability shall be provided with a limit of $4,000,000.

110.3.2 Commercial General Liability

This Subsection is amended by the addition of the following:

Where the Work to be performed has to do with railroads, then railroad Protective Liability Insurance shall be provided, with the Maine Turnpike Authority as a named insured.

The Contractual Liability Insurance shall cover the Contractor's obligation to indemnify the Authority as provided in Subsection 110.1, Indemnification.

110.3.4 Professional Liability

The first sentence is deleted and replaced with the following:

Contractors who engage in design Work, preliminary engineering Work, and environmental consulting Work for the Authority shall maintain a Professional Liability policy for errors and omissions with a minimum limit of liability of $5,000,000. The Authority reserves the right to require increased insurance limits for certain major Projects.

110.3.5 Owner's and Contractor's Protective Liability

This Subsection is deleted and replaced with the following:

For Projects with a Contract price in excess of $500,000, an "Owner's Protective" policy in the name of the Maine Turnpike Authority, with a $5,000,000 limit, shall also be provided.

110.3.6 Builder's Risk Insurance

This Subsection is amended by the addition of the following:

The Contractor shall provide Builder's Risk Insurance if the Project requires it. This determination will be made by the Authority and shall be so stated in the Special Provisions. The insurance coverage shall be shown on a special form and provide for transient and off-premise coverage and materials intended for use at the Project site. Any exclusion related to design, materials, or workmanship shall not apply to resulting damage.

110.3.8 Administrative and General Provisions

A. Additional Insured

This paragraph is deleted and replaced with the following:

Each policy, with the exception of Workers' Compensation and Professional Liability Insurance, shall name the Authority as an additional named insured. The Maine Turnpike Authority Contract Number shall be clearly stated on each policy.

SECTION 111 - RESOLUTION OF DISPUTES

111.1.2 Escalation Process

This Subsection is deleted and replaced with the following:

To resolve Issues and Disputes, the Contractor and the Maine Turnpike Authority will develop a Decision Matrix at the preconstruction or partnering meeting. See related Subsection 104.4.2, Preconstruction Conference. If an issue is not resolved, the matter becomes a Dispute and is eligible for settlement by an Alternate Dispute Resolution (ADR) process as outlined in this Section. Either the Authority or the Contractor may request an ADR process. If a Contractor is dissatisfied with an ADR recommendation, the decision may be appealed to the MTA Executive Director. A decision by the MTA Executive Director may be appealed to either Mediation or Arbitration. All costs of ADR, including Neutral Evaluations, Dispute Review Boards (DRBs), Mediation or Arbitration shall be shared equally.

ALTERNATIVE DISPUTE RESOLUTION

Preliminary ADR:

The purpose of the optional use of ADR is to assist the consenting parties to resolve disputes in a manner that complies with the Contract, that is fair, impartial, less expensive, faster and less formal than litigation. A Project issue becomes a Dispute eligible for ADR only when mutually acceptable resolution can not be achieved within the Decision Matrix-prescribed time period at the level of the Authority's Chief Operating Officer (COO), and the Contractor's Principal.

The Contractor and the Authority shall select a mutually acceptable form of Preliminary ADR from the following options, with the preference expressed in the order of listing.

1. NEUTRAL EVALUATION: Jointly selected by the disputing parties, the Neutral would conduct a third party, neutral investigation of both sides of the dispute, resulting in the submission of a Report of Recommended Settlement to the disputing parties.

2. DISPUTE REVIEW BOARD (DRB): The parties would jointly select two to three mutually acceptable experts who would hear and weigh a presentation of positions and evidence by the parties; resulting in the issuance by the DRB of a Recommended Settlement of the matter.

Recommendations by either a Neutral or a DRB will be non-binding unless the parties mutually agree in writing at the time of process selection that such recommendations will be binding.

Appeal to the Executive Director:

If either party rejects a recommendation resulting from ADR, the Dispute may be appealed to the Executive Director of the Authority. Once a dispute has been submitted to ADR, no party shall discuss the elements of the dispute with the Executive Director.

Final ADR - Mediation or Arbitration:

At the request of the Contractor, appeal decisions rendered by the Executive Director may be appealed by the Contractor to a Final ADR process of either Mediation or Arbitration. The costs of Mediation or Arbitration shall be borne equally by the Contractor and the Authority. Decisions by either a Mediator or an Arbitrator(s) will be non-binding unless the parties mutually agree in writing at the time of process selection that such recommendations will be binding.

NOTE: It is the intent of this Specification to retain maximum flexibility for the specific procedures for either Preliminary or Final Alternative Dispute Resolution. The processes shall follow the guidelines of construction industry ADR practices in general. The Authority and the Contractor will contribute equal input to the selection of location, methods, experts and timing of such processes. When a Dispute Review Board is utilized, the Authority and the Contractor shall have equal veto power in the selection of DRB composition.

111.1.8 Commissioner Communications Before Appeal

This Subsection is deleted and not replaced.

111.2 Project Level Negotiation to 111.6 Judicial Review

These Subsections (inclusive) are deleted and not replaced.

SECTION 112 - DEFAULT AND TERMINATION

112.2 Termination

This Subsection is amended by the addition of the following:

When the Contract is terminated, the Contractor shall, if so required by the Authority, promptly remove any or all of his/her equipment and supplies from the Project site or from other property of the

Authority, failing which the Authority may remove such equipment and supplies at the expense of the Contractor.

SECTION 203 - EXCAVATION AND EMBANKMENT

203.01 Description

The following is added at the end of the last paragraph:

Unclassified bids are submitted at the sole risk of the Bidder. The Contractor shall only be entitled to compensation at the unit prices submitted for the actual quantity of Common Excavation and Rock Excavation. No additional compensation shall be considered for changes from the estimated quantities to the actual quantities regardless of the reason for the change.

203.18 Method of Measurement

The seventh paragraph is amended as follows:

Elevations for final cross sections shall be determined as shown and calculated on the Plans. Measurements shall be determined at the bottom of loam line unless otherwise noted.

SECTION 502 - STRUCTURAL CONCRETE

502.10 Forms and False Work

D. Removal of Forms and False Work

The first paragraph is amended as follows:

In the first, second, and third sentences, "forms and false work" are replaced with "forms".

502.11 Placing Concrete

G. Concrete Wearing Surface and Structural Slabs on Precast Superstructures

The last paragraph is amended as follows:

In the third sentence, replace "The temperature of the concrete shall not exceed 24°C [75°F] at the time of placement." with "The temperature of the concrete shall not exceed 24°C [75°F] at the time the concrete is placed in its final position."

502.15 Curing Concrete

The first paragraph is amended as follows:

The first sentence is replaced with: "All concrete surfaces shall be kept wet with clean, fresh water for a curing period of at least seven (7) days after concrete placing, with the exception of vertical surfaces as provided for in Subsection 502.10 (D), Removal of Forms and False Work.

The second paragraph is amended as follows:

The first two sentences are deleted.

The third paragraph is amended as follows:

The entire paragraph, which starts "When the ambient temperature....", is deleted.

The fourth paragraph is amended as follows:

Delete "approved" to now read "...continuously wet for the entire curing period…".

The fifth paragraph is amended as follows:

The second sentence is changed from "...as soon as it is possible to do so without damaging the concrete surface." to: "...as soon as possible."

The seventh paragraph is amended as follows:

The first sentence is changed from "...until the end of the curing period." to "...until the end of the curing period, except as provided for in Subsection 502.10(D), Removal of Forms and False Work."

SECTION 503 - REINFORCING STEEL

503.06 Placing and Fastening

The second paragraph is amended as follows:

The third sentence is changed from "All tack welding shall be done in accordance with Section 504, Structural Steel." to "All tack welding shall be done in accordance with AWS D1.4, Structural Welding Code - Reinforcing Steel."

SECTION 504 - STRUCTURAL STEEL

504.09 Facilities for Inspection

The following is added to the last paragraph:

Failure to comply with the above requirements will be consider to be a denial to allow access to Work by the Contractor. The Department will reject any Work done when access for inspection is denied.

504.18 Plates for Fabricated Members

The second paragraph is amended as follows:

The first sentence is changed from "…ASTM A 898/A 898 M..." to "...ASTM A 898/A 898 M or ASTM A 435/A 435 M as applicable and...".

504.31 Shop Assembly

The following is added to the last sentence:

The minimum assembly length shall include bearing centerlines of at least two substructure units.

SECTION 535 - PRECAST, PRESTRESSED CONCRETE SUPERSTRUCTURE

535.02 Materials

"Steel Strand for Concrete Reinforcement" is changed to "Steel Strand."

The following is added to the beginning of the third paragraph:

Concrete shall be Class P conforming to the requirements in this Subsection. Twenty-eight day compressive strength shall be as stated on the Plans. Coarse aggregate...

535.05 Inspection Facilities

The following is added to the last paragraph:

Failure to comply with the above requirements will be considered to be a denial to allow access to Work by the Contractor. The Department will reject any Work done when access for inspection is denied.

535.26 Lateral Post-Tensioning

The first paragraph is replaced with the following:

Overstressing strands for setting losses cannot be accomplished for chuck to chuck lengths of 7.6 m [25 feet] and less. In such instances, refer to the Plans for all materials and methods. Otherwise, post-tensioning shall be in accordance with PCI standards and shall provide the anchorage force as noted in the Plans. The applied jacking force shall be no less than 100 percent of the design jacking force.

SECTION 603 - PIPE CULVERTS AND STORM DRAINS

603.0311 Corrugated Polyethylene Pipe for Option III

Minimum Mandrel Diameter Table is replaced with the following:

Nominal Size US Customary (in)	Minimum Mandrel Diameter (in)	Nominal Size Metric (nun)	Minimum Mandrel Diameter (mm)
12	11.23	300	280.73
15	14.04	375	350.91
18	16.84	450	421.09
24	22.46	600	561.45
30	28.07	750	701.81
36	33.69	900	842.18
42	39.30	1050	982.54
48	44.92	1200	1122.90

SECTION 604 - MANHOLES, INLETS, AND CATCH BASINS

604.02 Materials

The following are added:

Tops and Traps 712.07

Corrugated Metal Units	712.08
Catch Basin and Manhole Steps	712.09

SECTION 605 - UNDERDRAINS

605.05 Underdrain Outlets

The first paragraph is amended as follows:

In the second sentence, the words "metal pipe" are deleted.

SECTION 606 - GUARDRAIL

606.02 Materials

The fourth paragraph, which reads "Retroreflective beam guardrail delineators..." is deleted and replaced with the following:

Reflectorized sheeting for Guardrail Delineators shall meet the requirements of Subsection 719.01, Reflective Sheeting. Delineators shall be fabricated from high-impact, ultraviolet and weather resistant thermoplastic.

The eighth paragraph, which reads "The sole patented supplier of multiple mailbox..." is deleted and replaced with the following:

Acceptable multiple mailbox assemblies shall be listed on the Department's Approved Products List and shall be NCHRP 350 tested and approved.

606.09 Basis of Payment

The second and third sentences in the first paragraph are deleted in their entirety and replaced with the following:

Butterfly-type guardrail reflectorized delineators shall be mounted on all W-beam guardrail at an interval of every 10 posts [62.5 feet] on tangents sections and every five posts [31.25 feet] on curved sections as directed by the Resident. On divided highways, the delineators shall be yellow on the left hand side and silver/white on the right hand side. On two-way roadways, the delineators shall be silver/white on the right hand side. All delineators shall have retroreflective sheeting applied to only the traffic facing side. Reflectorized guardrail delineators will not be paid for directly, but will be incidental to the guardrail items.

SECTION 615 - LOAM

615.02 Materials

This Subsection is amended as follows:

One hundred percent of the loam material must pass the two inch sieve.

Organic Content	Percent by Volume
Humus	"5% - 10%", as determined by Ignition Test

SECTION 618 - SEEDING

618.01 Description

The first sentence is amended to read:

This Work shall consist of furnishing and applying seed.

The words “and cellulose fiber mulch” are deleted from 618.01(a).

618.03 Rates of Application

The last sentence in 618.03(a) is deleted and replaced with the following:

These rates shall apply to Seeding Method 2, 3, and Crown Vetch.

In 618.03(c), "1.8 kg [4 lb]/unit." is deleted and replaced with "1.95 kg [4 lb]/unit."

618.09 Construction Method

In 618.09(a) 1, sentence two, "100 mm [four inches]" is replaced with "25 mm [one inch] (Method 1 areas) and 50 mm [two inches] (Method 2 areas)".

618.15 Temporary Seeding

The Pay Unit is changed from “Unit” to “Kg [lb]”.

SECTION 620 - GEOTEXTILES

620.03 Placement

Section (c): Replace "Non-woven" in title with "Erosion Control".

The word "Non-woven” in the first paragraph is replaced with "Woven monofilament”.

The word "Non-woven" in the second paragraph is replaced with "Erosion Control".

620.07 Shipment, Storage, Protection and Repair of Fabric

Section (a): the second sentence is replaced with the following:

Damaged geotextiles, as identified by the Resident, shall be repaired immediately.

620.09 Basis of Payment

Pay Item 620.58: "Non-woven" is replaced with "Erosion Control".

Pay Item 620.59: "Non-woven" is replaced with "Erosion Control".

SECTION 621 - LANDSCAPING

621.0036 Establishment Period

In the fourth and fifth paragraphs, "time of Final Acceptance" is replaced with "end of the period of establishment".

In the seventh paragraph, "Final Acceptance date" is replaced with “end of the period of establishment”; and "date of Final Acceptance" is replaced with "end of the period of establishment".

SECTION 626 - HIGHWAY SIGNING

626.034 Concrete Foundations

The following is added to the end of the second paragraph:

Pre-cast and cast-in-place foundations shall be warranted against leaning and corrosion for two years after the Project is complete. If the lean is greater than two degrees from normal or the foundation is spalling within the first two years, the Contractor shall replace the foundation at his own cost.

SECTION 639 - ENGINEERING FACILITIES

639.04 Field Offices

This Subsection is amended by the addition of the following:

The Field Office location shall be approved by the Resident and shall be provided when the Contract starts and shall remain until the Contract is complete. The Contractor shall be responsible for furnishing and maintaining electricity, heat, facsimile machine and appliances for the entire duration of the Contract, which includes periods of time which Work has been suspended.

The Contractor shall provide a plain paper (8-1/2” x 11”) fax/copier machine with a 10 page (minimum) auto document feeder, 15 page (minimum) fax memory, 50 sheet (minimum) paper capacity, and a transmission speed of six pages (minimum) per minute for the Resident's use during the Project. All maintenance and supplies shall be the responsibility of the Contractor. The fax machine shall be connected to a separate telephone line so that the fax machine operates independent of the telephone and answering machine. A total of three phone lines shall be provided by the Contractor. All of the costs associated with the above shall be the responsibility of the Contractor except for the monthly telephone charges.

The following are not required:

- Accessible route conforming to the Americans with Disabilities Act
- Wheelchair accessible toilet

639.09 Telephone

This Subsection is amended as follows:

The Contractor shall be reimbursed at cost for the monthly telephone service charges. Telephone service shall remain throughout the Contract including periods of seasonal shutdowns.

639.11 Basis of Payment

The following is added after the first paragraph:

The Contractor shall be reimbursed at cost for the monthly telephone service charges. No additional markup will be allowed. The Contractor shall submit copies of the monthly bills to the Resident for payment.

SECTION 652 - MAINTENANCE OF TRAFFIC

652.2 Materials

The first sentence in the second paragraph is replaced with the following:

All construction signs shall be fabricated with super high intensity (ASTM 4956 – Type VII) retroreflective sheeting. All construction signs and construction sign packages shall have the Type VII sheeting material. 3924 Diamond Grade fluorescent orange sheeting manufactured by 3M conforms to ASTM 4956 – Type VII.

652.2.4 Other Devices

The eighth paragraph is amended by the addition of the following:

The Portable Message Signs shall be capable of being programmed remotely by telephone, of monitoring the speed of traffic in a travel lane, and of displaying a message in response to a vehicle exceeding an allowable speed threshold. The Contractor shall submit a catalog cut to the Resident for approval, establish a cellular account so that signs may be programmed remotely and provide training for the operation of the sign to the Resident.

The portable-changeable message signs may be moved throughout the Project area as required to provide advance warning of construction operations which may impact the flow of traffic as well used during lane closures to display messages relative to the speed of traffic. The Contractor shall remove, transport and maintain the signs as directed and approved by the Resident.

The Authority will be responsible for the actual programming of the signs.

A deduction will be made from money due the Contractor for signs that fail to operate for extended periods of time.

The following Subsection is added:

652.2.5 Safety Vests

All jobsite personnel shall wear a safety vest labeled as ANSI 107-199 standard performance for Class 2 risk exposure or an equivalent.

652.3.1 Responsibility of the Department

The first paragraph is deleted and replaced with the following:

The Authority will provide Project specific traffic control requirements and traffic control plans for use by the Contractor. The specific traffic control requirements for the Project are identified in Special Provision Section 652, Maintenance of Traffic (Specific Project Maintenance of Traffic Requirements). No

revisions to these requirements or Plans will be permitted unless the Contractor can thoroughly demonstrate an overall benefit to the public and a Contract Modification is approved.

The following sentence is added to the end of this Subsection:

The Maine Turnpike Authority may erect lane closures on the mainline within the Project area to collect survey, provide layout, and for any other reasons deemed necessary by the Resident.

652.3.2 Responsibility of the Contractor

The first paragraph is amended as follows:

The Contractor shall provide continuous and effective traffic control and management for the Project that is appropriate to the means, methods and sequencing allowed by the Contract; and consistent with the Traffic Control Plans and Maintenance of Traffic Specifications. The Contractor is responsible for ensuring a safe environment for the Contract workforce, local road users, and turnpike users; and maintaining the safe efficient flow of traffic through the construction zone at all times during the Contract. The protocols and requirements outlined in the Contract shall be strictly enforced.

The following paragraph is added:

The Contractor shall designate a supervisor to be responsible for the safe placement and maintenance of all traffic control devices. This individual shall be trained to safely install and maintain the devices. The Contractor shall submit to the Resident, in writing, documentation stating that this individual has reviewed and understands the traffic control requirements of the Contract and the Manual of Uniform Traffic Control Devices.

652.3.3 Submittal of Traffic Control Plan

This Subsection is deleted and not replaced.

652.3.4 General

This Subsection is deleted in its entirety and replaced with the following:

Prior to starting any Work on any part of the Project adjacent to or being used by the traveling public, the Contractor shall install the appropriate traffic control devices in accordance with the Plans, Specifications and the latest edition of the Manual of Uniform Traffic Control Devices, Part VI. The Contractor shall continuously maintain the traffic control devices in their proper position, and they shall be kept clean, legible and in good repair throughout the duration of the Work. The Contractor shall correct all problems or violations upon observation by the Contractor or upon notification by the Resident. Failure to correct a problem within one hour of notification during non-working hours or to respond immediately to a problem during Work hours, shall result in a penalty of $150.00 per occurrence. The Resident shall be the sole judge as to the time and response.

No equipment or vehicles of the Contractor, their Subcontractors, or employees engaged in Work on this Contract shall be parked or stopped on lanes carrying traffic, or on lanes or shoulders adjacent to lanes carrying traffic, at any time, except as required by ongoing Work operations. Contractor equipment or vehicles shall never be used to stop, block, or channelize traffic.

Vehicles parked on the shoulder shall be located so all portions of the vehicle(s) are a minimum of one foot from the traveled way. No operation (including loading or unloading vehicles) shall be conducted

on or near the traveled lanes or shoulders without first setting up the proper lane closure and traffic control devices. These precautions shall be maintained at all times while this Work is being performed.

The Contractor shall keep all paved areas of the highway as clear as possible at all times. No materials shall be stored on any paved area of the highway or within 30 feet of the traveled way (unless protected by concrete barriers and specifically approved by the Resident). Private vehicles owned by Contractor's employees shall be parked close together in a group no closer than 30 feet from the traveled way in pre-approved areas.

Channelization devices shall include Vertical Panel Markers, Barricades, Cones, and Cones and Drums. These devices shall be installed and maintained at the spacing shown on the Traffic Control Plans, or determined by the MUTCD, through the Work area.

No lane closures will be allowed during non-working hours, weekends and/or holiday periods unless included in the Contract as long-term traffic control requirement or approved by the Resident.

Any special signs, barricades or other devices deemed necessary by the Resident shall be furnished and maintained by the Contractor. Extra care shall be taken so that the traffic flow will not be disturbed. The use of construction signs and warning devices not shown on the Plans or in the MUTCD, unless approved by the Resident, will be prohibited.

The Contractor's personnel and equipment shall avoid crossing traffic whenever possible. No Contractor's vehicle may slow down or stop in a traffic lane unless said lane has previously been made safe with signs and barricades as required by the Resident.

No vehicle will move onto the traveled way at such a time or in such a manner so as to cause undue concern or danger to traffic approaching from either direction. The Contractor or his employees are not empowered to stop traffic.

The Contractor shall take necessary care at all times, in all operations and use of his equipment, to protect and facilitate traffic. During periods of idleness, the equipment shall not be left in a way to obstruct the traffic artery or to interfere with traffic.

The following Subsection is added:

652.3.41 Local Road General Requirements

Channelization devices consisting of barricades or drums, at a maximum spacing of 50 feet, shall be used in guardrail areas when neither the existing nor the new guardrail is in place. The Contractor shall not remove guardrail until absolutely necessary for construction operations in that area. The guardrail shall be replaced as soon as possible thereafter.

All excavation areas adjacent to the roadway shall be channelized continuously in both directions for the length of the Project in all areas where the centerline strip is not effective in accordance with the latest edition of MUTCD.

Where the roadway is adjacent to an area being excavated or filled, a minimum two foot shoulder should be maintained and the effective slope of the earth excavation or fill slope, beyond the two foot shoulder, shall not be steeper than 1-1/2 horizontal to 1 vertical. The effective slope of rock excavation shall not be steeper than 1 horizontal to 1 vertical beyond the two foot shoulder. In the case of cuts over five feet deep, an earth berm or other approved barrier shall be placed between the travel lane and the excavated area. In this instance, travel speeds shall be limited by specific advisory signing to 20 miles per hour in all cases. When excavation does not leave sufficient usable widths to maintain two-way traffic as provided in

Subsection 105.4, Maintenance of Work, one-lane traffic controlled by a traffic signal or continuous flagging may be considered. Closely spaced vertical panels, drums or other channelizing devices shall be used on any of these types of areas that are left exposed for short durations.

When paving operations or shoulder grading leave a three inch or less exposed vertical face at the edge of the traveled way, channelization devices shall be placed two feet outside of the pavement at intervals not exceeding 600 feet and a 48 inch by 48 inch W8-9 "Low Shoulder" sign shall be placed at a maximum spacing of 1/2 mile. When paving operations or shoulder grading leave a three inch or grater exposed vertical face at the edge of the traveled way, the Contractor shall place shoulder material for a width of at least four feet to meet the pavement grade, and place channelizing devices as above, before the lane is opened to traffic.

652.3.5 Installation of Traffic Control Devices

The first paragraph is deleted and replaced with the following:

Portable signs shall be erected on temporary sign supports approved crashworthy devices in conformance with NCHRP 350 requirements so that the bottom is either 1) 300 mm [12 inches]; or 2) greater than 1.5 m [five feet] above the traveled way. Post-mounted signs shall be erected so the bottom is no less than 1500 mm [five feet] above the traveled way, and 2100 mm [seven feet] above the traveled way in business, commercial, and residential areas. All post-mounted signs on the turnpike mainline shall be erected so the bottom is no less than 2100 mm [seven feet] above the traveled way. Post-mounted signs must also be erected so that the sign face is in a true vertical position. All signs shall be mounted within four feet of the existing edge of pavement. All signs shall be placed so that they are not obstructed in any manner and immediately modified to ensure proper visibility if obstructed. Due to Contractor or Project staging, it may be necessary to relocate previously erected portable or post-mount signs so they are clearly visible. Signs may be mounted lower or higher to fit the situation when authorized by the Resident. Cones shall either be weighted or nailed. Tires will not be allowed as weights.

The following is added to the end of the third paragraph:

NHCRP 350 tested drums with tire sidewall ballasts are acceptable. During winter periods, drums shall be placed on the grass shoulder or removed from the roadway so winter maintenance operations will not be impacted. This requires the placement of drums behind the median guardrail. Drums shall not be placed on snow banks.

The following is added to the end of the fifth paragraph:

The method of covering existing signs must be approved by the Resident. The use of adhesives on the sign face is prohibited.

The sixth paragraph is deleted and replaced with the following:

The Contractor shall replace damaged or missing traffic control devices with similar devices of acceptable quality.

The following paragraph is added to the end of this Subsection:

The Contractor is required to cover all existing signs, including regulatory and warning signs, within the Work zone which may conflict with the proposed construction signs. The Contractor is also required to cover all permanent construction signs when they conflict with a daily traffic control setup.

652.3.6 Traffic Control

The first sentence of the first paragraph is deleted and replaced with the following:

The minimum roadway width for local road one-way and two-way traffic, and minimum number of lanes and lane widths for the Maine Turnpike, are identified on the Project's traffic control plans and/or in Special Provision Section 652, Maintenance of Traffic (Specific Project Maintenance of Traffic).

The last sentence of the third paragraph is deleted and not replaced.

652.41 Traffic Officers

The first paragraph is deleted and replaced with the following:

Local road traffic officers, if required, shall be uniformed police officers. State Police officers and vehicles shall be used to warn and stop traffic on the Maine Turnpike. All State Police shall be scheduled through the Maine Turnpike Authority. The Authority will make payment for the State Police officers and vehicles directly to the State Police.

The Contractor will not be entitled to additional compensation if scheduled Work is not completed due to the unavailability of State Police.

652.6 Night Work

The sixth and seventh paragraphs are deleted and not replaced.

The following Subsection is added:

652.61 Construction Vehicles

The Contractor shall furnish approved signs reading "Construction Vehicle - Keep Back" to be used on trucks hauling to the Project. The signs shall be a minimum of 30 inch by 60 inch, Black and Orange, Type VII. The older type "Construction Vehicle - Do Not Follow" may be used until the end of their service life.

All vehicles used on the Project shall be equipped with amber flashing lights, visible from both front and rear, or by means of a single, approved type, revolving, flashing or strobe lights mounted so as to be visible 360 degrees. The vehicle flashing system shall be in continuous operation while the vehicle is on any part of the Project. Dump trucks and utility trucks shall have a strobe light mounted on each side of the vehicle.

652.7 Method of Measurement

The following is added to the end of the first paragraph:

The per unit measurement for payment of the portable–changeable message sign shall include the establishment and payment of a cellular phone account so that the portable–changeable message sign may be programmed remotely.

The following is added to the end of the second paragraph:

The number and locations of Flaggers will be determined by the Resident. Flaggers used during the Contract, for the convenience of the Contractor, will not be measured separately for payment, but shall be

incidental to the various pay items. The Authority will make payment for the State Police officers and vehicles directly to the State Police when utilized for mainline traffic control activities. State Police escorts, if required to move oversize material or equipment loads to the jobsite, will not be paid separately, but shall be incidental to the various pay items.

652.8.2 Other Items

The last paragraph is deleted and replaced with the following:

There will be no payment made under any 652 pay items after the expiration of the adjusted total Contract time.

SECTION 653 - POLYSTYRENE PLASTIC INSULATION

653.05 Placing Backfill

In the second sentence, "...shall be not less than 150 mm [six inches] loose measure." is changed to "...shall be not less than 250 mm [10 inches] loose measure."

In the third sentence "...crawler type bulldozer of not more than 390 kg/m^2 [80 lb/ft^2] ground contact pressure..." is changed to "...crawler type bulldozer of not more than 4875 kg/m^2 [2000 lb/ft^2] ground contact pressure..."

653.06 Compaction

In the final sentence "...crawler type bulldozer of not more than 390 kg/m^2 [80 lb/ft^2] ground contact pressure..." is change to "...crawler type bulldozer of not more than 4875 kg/m^2 [2000 lb/ft^2] ground contact pressure..." it]."

SECTION 656 - TEMPORARY SOIL EROSION AND WATER POLLUTION CONTROL

Section 656 is deleted in its entirety and replaced with the following:

656.01 Description

This Work shall consist of providing temporary erosion control during construction in accordance with these Specifications, standard details, Best Management Practices, or as otherwise directed.

All temporary erosion control devices shall be in place and approved by the Resident prior to any embankment and excavation operations. The Contractor is responsible for repairing and replacing damaged or missing sandbags, haybales, and silt fence material. The Contractor shall maintain these devices in a clean and properly operating condition as described herein.

The Contractor is responsible for all temporary drainage and erosion control measures. The Contractor shall review his construction operations and staging to determine if additional erosion control measures are required. The Resident may also request additional erosion control measures. The cost for all erosion control devices necessary, due solely to the Contractor's construction operations and are not shown on the Plans, shall be borne solely by the Contractor. The frequency of inspection of these devices by the Contractor and the Erosion Control Compliance Officer (ECCO) shall be bi-weekly and immediately following a rainfall of greater than 1/2 inch in a 24-hour period.

In areas of ledge or frozen ground only, the Contractor may opt to furnish and install an erosion control filter berm in lieu of silt fence. The erosion control filter berm shall be a water permeable windrow of a composted bark mix to remove suspended soil particles from water moving off the site. Erosion control filter berm shall be considered an erosion control device. This material and specific application shall be submitted to the Resident for approval.

656.02 General

Baled hay shall be bales at approximately 350 by 450 by 750 mm [14 by 18 by 30 inch], or an equivalent, securely tied to form a firm bale.

Sandbags shall consist of heavy cloth or woven plastic bags, approximately 0.03 m3 [one cubic foot] capacity, filled with sand or gravel.

Dumped stone shall be a graded mixture of large and small stone with approximately 50 percent of the stones larger than 150 mm [six inch].

Flexible drainage pipe shall consist of collapsible neoprene pipe, a minimum of 12 inches in diameter or equal.

656.03 Silt Fence

(a) Posts

Either hardwood posts or steel posts shall be used.

Hardwood posts shall be straight, at least 450 mm [18 inches] longer than the height of the silt fence and at least 32 mm by 32 mm [1 inch by 1 inch].

Staples shall be of No. 9 wire.

Steel posts shall be at least 450 mm [18 inches] longer than the height of the silt fence and have the means provided for fastening wire to the fence.

(b) Wire Support Fence

If required, wire support fence shall be at least 50 mm [2 inches] higher than the height of the silt fence. Horizontal and vertical wires shall be spaced no more than 150 mm [6 inches] apart. The top and bottom wires shall be at least 10 gauge; all other wires at least 12 gauge.

(c) Silt Fence

The woven geotextile fabric and components shall be made from polypropylene, polyester, polymide or other chemically stable material and be resistant to ultraviolet radiation degradation for at least 12 months of installation. Silt retention capacity shall be no less than 75 percent. The fabric shall have a Mullen burst test of no less than 1790 kPa [260 pounds per square inch] with a maximum average sieve opening size of 850 pm to 250 pm [No. 20 to No. 60]. Roll width of the fabric shall be no less than 150 mm [6 inches] wider than the height of the fence, except fabric for boom supported floating silt fence which shall be no less than 600 mm [two feet] wider than the design width.

(d) Flotation Devices

The flotation boom and weighing devices for boom supported floating silt fence shall be sufficient to hold the fence in an approximately vertical position.

656.04 Temporary Erosion Checks

Temporary erosion checks shall be constructed in ditches and at other locations designated. Checks shall be in accordance with the Standard Detail unless otherwise directed.

Baled hay, sandbags, or both, shall be used in other areas as necessary to inhibit soil erosion.

Sediment deposits behind haybales and silt fence shall be removed when the depth of sediment reaches 50 percent of the erosion control device height.

The Contractor is also required to have on-site, at all times, 25 percent additional Contract quantities of silt fence for use as backup devices.

656.041 Erosion Control Filter Berm

The erosion control berm shall be placed uncompacted, in a windrow in locations approved by the Resident. The cross section of the berm shall be four feet wide at the base and 1-1/2 feet high at the center. The erosion control filter berm shall be removed when no longer required, as determined by the Resident, and shall be distributed over an adjacent area.

656.05 Temporary Berms

When designated, temporary barriers shall be constructed along the edge of the embankment. The barriers shall be of embankment earth material, gravel or sand as available and shaped approximately as shown in the Standard Details. The barriers shall be compacted with the wheels of construction equipment. When placed on pavement, the berms shall be constructed of asphalt grindings or other non-erodible soil material as approved by the Resident, and shaped as shown in the Standard Details.

At designated intervals, temporary slope drains shall be constructed with a crescent shaped barrier placed at each slope drain to direct the water into the inlet pipe.

656.06 Temporary Slope Drains

Collapsible pipe with corrugated metal pipe inlet shall be placed down the embankment slopes at designated locations and in accordance with the Best Management Practices.

At the outlet end of the drain, dumped stone shall be placed to prevent scoring unless otherwise directed.

656.07 Dumped Stone

Dumped stone shall be placed at designated locations and shaped to the extent necessary to spread the stone over the area and in sufficient depth to prevent soil erosion.

656.08 Silt Fence

The silt fence shall be installed at all environmentally sensitive areas as shown on the Plans or as directed. The Contractor shall have the option to provide a reinforced filter fabric or an un-reinforced filter fabric attached to a wire fence.

The fence posts shall be spaced as specified by the Resident, however, not to exceed a maximum of 2.5 m [eight feet] apart when either type of silt fence is used and be driven a minimum of 450 mm [18 inches] into the ground.

The geotextile fabric shall be secured to the post or fence by suitable staples, tie wire or hog rings in such a manner as to prevent tearing and sagging of the fabric. The bottom of the geotextile fabric shall be entrenched into the ground a minimum depth of 150 mm [six inches] to prevent water from flowing under the fence. The geotextile shall be spliced together only at support posts with a minimum 150 mm [six inches] overlap and secure post connection which prevents leakage of silt. The top of the geotextile shall be installed with a reinforced top end section.

The Contractor shall maintain the silt fence in a functional condition at all times. All deficiencies shall be immediately corrected by the Contractor. The Contractor shall make a daily inspection of the silt fences in areas where construction activity causes drainage runoff, to ensure that the silt fences are properly located for effectiveness. Where deficiencies exist, additional silt fences shall be installed as approved or directed.

Sediment deposits shall be removed when sediments reach 50 percent of the height of the device. All sediment deposits remaining in place after the device is no longer required shall be graded to conform with the existing ground, seeded, and mulched immediately.

Geotextile fabric which has decomposed or has become ineffective and is still needed shall be replaced with material equal to the original design.

656.081 Boom Supported Floating Silt Fence

The silt fence fabric shall be securely attached to the flotation boom with a continuous weight placed the entire length of the fence to maintain the fence in a vertical submerged position from the surface of the water to the design depth.

Anchor's shall be placed at the ends of the fence, and intermediate locations if necessary, to hold the fence securely in place.

656.082 Maintenance

The erosion control devices will be cleaned, repaired, or replaced as necessary. All deficiencies shall be corrected immediately by the Contractor.

656.085 Erosion Control Compliance Officer

The Contractor shall designate an Erosion Control Compliance Officer (ECCO) on this Project who shall accompany the Resident's ECCO in the inspection of all erosion control devices. An inspection log shall be maintained by the Resident and the log shall be signed by the Resident's ECCO and the Contractor's ECCO after each inspection. Failure to comply with the erosion and sedimentation control requirements herein or as directed by the Resident's ECCO within 24-hours after the violation is noted in the inspection log, will result in the $1,000 per day per violation penalty until the violation is corrected to the satisfaction of the Resident.

656.09 Removing and Disposing

When no longer needed, material and devices for temporary erosion control shall be removed or may be left in place and dispersed over an adjacent area, as directed.

When removed, such devices may be reused in other locations provided they are in good condition and suitable to perform the erosion control for which they are intended.

When dispersed over adjacent areas, the material shall be scattered to the extent that it causes no unsightly conditions nor creates future maintenance problems. Dumped stone shall be dispersed or covered in such a manner that it will not interfere with future mowing operations.

656.10 Method of Measurement

Baled hay and sandbags will be measured for payment by the number of bales or bags satisfactorily placed. Dumped stone will be measured for payment by the cubic meter [cubic yard] in vehicles.

Temporary berms and temporary slope drains will be measured for payment by the meter [linear foot] measured parallel with the flow line including the pipe inlet.

Temporary silt fence will be measured by the meter [linear foot] along the gradient of the fence, end post to end post.

Boom supported floating silt fence will be measured by the meter [linear foot] not including anchorages.

Erosion control filter berm shall be measured by the linear foot.

The quantity of additional haybales and silt fence material required herein will be measured for payment only when and if they are actually put to use as additional measures on the Project as directed by the Resident. Haybales and silt fence material used for maintenance or replacement of existing devices will not be measured for payment.

The removal of silt and other material from behind the haybales and silt fence will not be measured separately for payment, but shall be incidental to the Erosion Control items.

656.11 Basis of Payment

The accepted quantity of baled hay or sandbags will be paid for at the Contract unit price each for each bale or bag which price shall be full compensation for furnishing and placing the bales or sandbags, for furnishing and driving the stakes for baled hay and for the removing and disposing of the bales, stakes and sandbags when no longer needed.

The accepted quantity of temporary berms will be paid for at the Contract unit price per meter [linear foot] of berm which price shall be full compensation for furnishing, placing and compacting material, for maintaining and for removing the berm when no longer needed.

There will be no separate payment for excavation done in the construction of temporary erosion control items under this Section and all necessary excavation shall be incidental to the Work.

The accepted quantity of dumped stone will be paid for at the Contract unit price per cubic

meter [cubic yard] which price shall be full compensation for furnishing the stone, transporting, placing and shaping. Payment for removal or for covering will be made under Item 629.05, Hand Labor, and the appropriate equipment rental items.

The accepted quantity of temporary silt fence and boom supported floating silt fence will be paid for at the Contract unit price per meter [linear foot] complete in place. Payment shall be full compensation for furnishing, installing, maintaining, for replacing deteriorated geotextile and clogged geotextile when required and for removing and disposing of the fence when no longer needed.

The accepted quantity of erosion control filter berm will be paid for at the Contract unit price per linear foot under Item 656.632, 30 Inch Temporary Silt Fence, which price shall be full compensation for furnishing, placing, and removing the erosion control filter berm.

The removal of sediments and debris that accumulate around erosion control devices, when directed by the Resident, will be paid for under the appropriate Contract items.

Cost of seeding and mulching the area after removal of the temporary silt fence will be paid for at the Contract unit prices for Item 618, Seeding, and Item 619, Mulch.

Payment will be made under:

Pay Item		Pay Unit
656.50	Baled Hay, in place	Each
656.51	Sandbag, in place	Each
656.55	Dumped Stone	Cubic Meter [Cubic Yard]
656.60	Temporary Berms	Meter [Linear Foot]
656.62	Temporary Slope Drains	Meter [Linear Foot]
656.631	375 mm [15 inch] Temporary Silt Fence	Meter [Linear Foot]
656.632	750 mm [30 inch] Temporary Silt Fence	Meter [Linear Foot]
656.64	Boom Supported Floating Silt Fence	Meter [Linear Foot]

SECTION 701 – STRUCTURAL CONCRETE RELATED MATERIALS

701.10 Fly Ash - Chemical Requirements

All references to “ASTM C311’ are changed to “ASTM C114”.

SECTION 703 - AGGREGATES

703.06 Aggregate for Base and Subbase

The first paragraph is deleted and replaced with the following:

The material shall have a minimum degradation value of 15 as determined by Washington State DOT Test Method T113, Method of Test for Determination of Degradation Value (March 2002 version), except that the reported degradation value will be the result of testing a single specimen from that portion of a sample that passes the 12.5 mm [1/2 inch] sieve and is retained on the 2.00 mm [No. 10] sieve, minus any reclaimed asphalt pavement used.

703.22 Underdrain Backfill Material

The first paragraph is amended as follows:

"...for Underdrain Type B..." is changed to "... for Underdrain Type B and C..."

SECTION 706 - NON-METALLIC PIPE

706.06 Corrugated Polyethylene Pipe for Underdrain, Option I and Option II in Culvert Pipe

The first sentence is changed from "...300 mm diameters to 900 mm" to "...300 mm diameters to 1,200 mm".

The last sentence which begins "This pipe and resins..." is deleted in its entirety and replaced with the following:

The manufacturing plants of polyethylene pipe shall be certified by the Eastern States Consortium. Polyethylene pipe shall be accepted based on third party certification by the AASHTO's National Transportation Product Evaluation Program.

SECTION 709 - REINFORCING STEEL AND WELDED STEEL WIRE FABRIC

709.03 Steel Strand

The second paragraph is changed from "...shall be 12mm [1/2 inch] AASHTO M203M/M203 (ASTM A416/A416M)..." to "...shall be 15.24 mm [0.600 inch] diameter AASHTO M203 (ASTM A416)...".

SECTION 712 - MISCELLANEOUS HIGHWAY MATERIALS

The following Subsections are added:

712.07 Tops and Traps

These metal units shall conform to the Plan dimensions and to the following Specification requirements for the designated materials:

Gray iron castings shall conform to the requirements of AASHTO M105, Class 30, unless otherwise designated.

Carbon steel castings shall conform to the requirements of AASHTO M103/M103M. Grade shall be 450-240 [65-35] unless otherwise designated.

Structural steel shall conform to the requirements of AASHTO M183/M183M or ASTM A283/A283M, Grade B or better. Galvanizing, where specified for these units, shall conform to the requirements of AASHTO M 111.

712.08 Corrugated Metal Units

The units shall conform to Plan dimensions and the metal to AASHTO M36/M36M. Bituminous coating, when specified, shall conform to AASHTO M 190 Type A.

712.09 Catch Basin and Manhole Steps

Steps for catch basins and for manholes shall conform to ASTM C478M [ASTM C478], Section 13 for either of the following material:

(a) Aluminum steps-ASTM B221M, [ASTM B21 1] Alloy 6061-T6 or 6005-T5.

(b) Reinforced plastic steps steel reinforcing bar with injection molded plastic coating copolymer polypropylene. Polypropylene shall conform to ASTM D 4101.

712.23 Flashing Lights

Flashing lights shall be power operated or battery operated as specified.

(a) Power operated flashing lights shall consist of housing, adapters, lamps, sockets, reflectors, lens, hoods and other necessary equipment designed to give clearly visible signal indications within an angle of at least 45 degrees and from three to 90 m [10 to 300 feet] under all light and atmospheric conditions.

Two circuit flasher controllers with a two-circuit filter capable of providing alternate flashing operations at the rate of not less than 50 nor more than 60 flashes per minute shall be provided.

The lamps shall be 650 lumens, 120 volt traffic signal lamps with sockets constructed to properly focus and hold the lamp firmly in position.

The housing shall have a rotateable sun visor not less than 175 nun [seven inches] in length designed to shield the lens.

Reflectors shall be of such design that light from a properly focused lamp will reflect the light rays parallel. Reflectors shall have a maximum diameter at the point of contact with the lens of approximately 200 mm [eight inches].

The lens shall consist of a round one-piece convex amber material which, when mounted, shall have a visible diameter of approximately 200 mm [eight inches]. They shall distribute light and not diffuse it. The distribution of the light shall be asymmetrical in a downward direction. The light distribution of the lens shall not be uniform, but shall consist of a small high intensity portion with narrow distribution for long distance throw and a larger low intensity portion with wide distribution for short distance throw. Lenses shall be marked to indicate the top and bottom of the lens.

(b) Battery operated flashing lights shall be self- illuminated by an electric lamp behind the lens. These lights shall also be externally illuminated by reflex reflective elements built into the lens to enable it to be seen by reflex reflection of the light from the headlights of oncoming traffic. The batteries must be entirely enclosed in a case. A locking device must secure the case. The light shall have a flash rate of not less than 50 nor more than 60 flashes per minute from minus 30°C [minus 20°F] to plus 65°C [plus 150°F]. The light shall have an on time of not less than 10 percent of the flash cycle. The light beam projected upon a surface perpendicular to the axis of the light beam shall produce a lighted rectangular projection whose minimum horizontal dimension shall be five degrees each side of the horizontal axis. The effective intensity shall not have an initial value greater than 15.0 candelas or drop below 4.0 candelas during the first 336-hours of continuous flashing. The illuminated lens shall appear to be uniformly

bright over its entire illuminated surface when viewed from any point within an angle of nine degrees each side of the vertical axis and five degrees each side of the horizontal axis. The lens shall not be less than 175 mm [seven inches] in diameter including a reflex reflector ring of 13 mm [1/2 inch] minimum width around the periphery. The lens shall be yellow in color and have a minimum relative luminous transmittance of 0.440 with a luminance of 2854° Kelvin. The lens shall be one-piece construction. The lens material shall be plastic and meet the luminous transmission requirements of this Specification. The case containing the batteries and circuitry shall be constructed of a material capable of withstanding abuse equal to or greater than 1.21 mm thick steel [No. 18 U.S. Standard Gage Steel]. The housing and the lens frame, if of metal shall be properly cleaned, degreased and pretreated to promote adhesion. It shall be given one or more coats of enamel which, when dry shall completely obscure the metal. The enamel coating shall be of such quality that when the coated case is struck a light blow with a sharp tool, the paint will not chip or crack and if scratched with a knife will not powder. The case shall be so constructed and closed as to exclude moisture that would affect the proper operation of light. The case shall have a weep hole to allow the escape of moisture from condensation. Photoelectric controls, if provided, shall keep the light operating whenever the ambient light falls below 215 lx [20 foot candles]. Each light shall be plainly marked as to the manufacturer's name and model number.

If required by the Resident, certification as to conformance to these Specifications shall be furnished based on results of tests made by an independent testing laboratory. All lights are subject to random inspection and testing. All necessary random samples shall be provided to the Resident upon request without cost to the Authority. All such samples shall be returned to the Contractor upon completion of the tests.

712.32 Copper Tubing

Copper tubing and fittings shall conform to the requirements of ASTM B88M Type A [ASTM B88, Type K] or better.

712.33 Non-metallic Pipe, Flexible

Non-metallic pipe and pipe fittings shall be acceptable flexible pipe manufactured from virgin polyethylene polymer suitable for transmitting liquids intended for human or animal consumption.

712.34 Non-metallic Pipe, Rigid

Non-metallic pipe shall be Schedule 40 polyvinylchloride (PVC) that meets the requirement of ASTM D 1785. Fittings shall be of the same material.

712.341 Metallic Pipe

Metallic pipe shall be ANSI, Standard B36. 10, Schedule 40 steel pipe conforming to the requirements of ASTM A53 Types E or S, Grade B. End plates shall be steel conforming to ASTM A36/A36M.

Both the sleeve and end plates shall be hot dip galvanized. Pipe sleeve splices shall be welded splices with full penetration weld before galvanizing.

712.35 Epoxy Resin

Epoxy resin for grouting or sealing shall consist of a mineral filled thixotropic, flexible epoxy

resin having a pot life of approximately one hour at 10°C [50°F]. The grout shall be an approved product suitable for cementing steel dowels into the preformed holes of curb inlets and adjacent curbing. The sealant shall be an approved product, light gray in color and suitable for coating the surface.

712.36 Bituminous Curb

The asphalt cement for bituminous curb shall be of the grade required for the wearing course, or shall be Viscosity Grade AC-20 meeting the current requirements of Subsection 702.01, Asphalt Cement. The aggregate shall conform to the requirements of Subsection 703.07. The coarse aggregate portion retained on the 2.36 mm [No. 8] sieve may be either crushed rock or crushed gravel.

The mineral constituents of the bituminous mixture shall be sized and graded and combined in a composite blend that will produce a stable durable curbing with an acceptable texture. Bituminous material for curb shall meet the requirements of Section 403, Hot Bituminous Pavement.

712.37 Precast Concrete Slab

Portland Cement concrete for precast slabs shall meet the requirements of Section 502, Structural Concrete, Class A.

The slabs shall be precast to the dimension shown on the Plans and cross section and in accordance with the Standard Detail Plans for Concrete Sidewalk Slab. The surface shall be finished with a float finish in accordance with Subsection 502.14(c). Lift devices of sufficient strength to hold the slab while suspended from cables shall be cast into the top or back of the slab.

712.38 Stone Slab

Stone slabs shall be of granite from an acceptable source, hard, durable, predominantly gray in color, free from seams which impair the structural integrity and be of smooth splitting character. Natural color variations characteristic of the deposit will be permitted. Exposed surfaces shall be free from drill holes or indications of drill holes. The granite slabs in any one section of backslope must be all the same finish.

The granite slabs shall be scabble dressed or sawed to an approximately true plane having no projections or depressions over 13 mm [1/2 inch] under a 600 mm [two foot] straightedge or over 25 mm [one inch] under a 1200 mm [four foot] straightedge. The arris at the intersection of the top surface and exposed front face shall be pitched so that the arris line is uniform throughout the length of the installed slabs. The sides shall be square to the exposed face unless the slabs are to be set on a radius or other special condition which requires that the joints be cut to fit, but in any case shall be so finished that when the stones are placed side by side no space more than 20 mm [3/4 inch] shall show in the joint for the full exposed height.

Lift pin holes in all sides will be allowed except on the exposed face.

SECTION 717 - ROADSIDE IMPROVEMENT MATERIAL

717.03 C. Method #3 - Roadside Mixture #3

Seed proportions are amended as follows:

Crown Vetch	25.0%
Perennial Lupine	25.0%

Red Clover	12.5%
Annual Rye	37.5%

717.05 Mulch Binder

The third sentence is amended as follows:

"Paper fiber mulch may be used as a binder at the rate of 2.3 kg/unit [5 lb/unit]."

MAINE TURNPIKE AUTHORITY

SPECIFICATIONS

PART II – SPECIAL PROVISIONS

MAINE TURNPIKE AUTHORITY

SPECIFICATIONS

PART II - SPECIAL PROVISIONS

All work shall be governed by the Maine Department of Transportation Standard Specifications except for that work which applies to sections of the Maine Department of Transportation Standard Specifications which are amended by the Maine Turnpike General Provisions and the following modifications, additions and deletions.

General Description of Work

The work consists of converting the exterior two lanes in the eastbound direction to the new cash system, construction of two new westbound cash lanes, construction of a precast pedestrian tunnel for employee access and utilities, demolition of the remaining cash lanes and conversion from cash/E-ZPass into ORT lanes, and reconstruction of the mainline to accommodate approach and departure grade differentials at the modified plaza for the Maine Turnpike.

The work includes earthwork, pavement, concrete, toll plaza demolition and modification, signing, bridge overpass-mounted, overhead and cantilever sign structures, concrete barrier, guardrail, electrical work, lighting and lightning suppression systems. The work also includes the installation of tolling equipment in the tunnel, canopy, and toll booth, maintenance of traffic and all other work incidental thereto in accordance with the Plans and Specifications.

The general limits of work are from Mile F 2.0 (Station 100+00) to Mile F 3.8 (Station 193+50) in Falmouth.

Plans

The drawings included in these Contract Documents, and referred to as the Plans show the general character of the work to be done under this Contract. They bear the general title "Maine Turnpike Authority – Contract 2015.13 – Falmouth Spur Toll Plaza, Open Road Tolling Conversion, (MM F2.8)". The right is reserved by the Resident to make such minor corrections or alterations in the Plans as he deems necessary without change in the unit prices on the Schedule of Prices of the Proposal.

101.2 Definition

Holidays

The following is added after Memorial Day in the General Provisions:

Christmas Day 2015	12:01 p.m. preceding Wednesday to 12:01 p.m. the following Monday.
New Year's Day 2016	06:00 a.m. preceding Thursday to 06:00 a.m. the following Monday.

Independence Day 2016	06:00 a.m. preceding Friday to 06:00 a.m. the following Tuesday.
Christmas Day 2016	06:00 a.m. preceding Friday to 06:00 a.m. the following Tuesday.
New Year's Day 2017	06:00 a.m. preceding Friday to 06:00 a.m. the following Tuesday.
Independence Day 2017	06:00 a.m. preceding Friday to 06:00 a.m. the following Wednesday

102.11.2 Curable Bid Defects

This Subsection is amended by the addition of the following:

G. If the electrical subcontractor is not identified in the Proposal the Contractor will need to identify prior to Award.
H. If the electrical subcontractor identified in the Proposal is not prequalified by the Maine Department of Transportation for Traffic Signals and Lighting Projects the Contractor will need to agree to contract with a prequalified electrical subcontractor prior to Award.

103.4 Notice of Award

The following sentence is added:

The Maine Turnpike Authority Board is scheduled to consider the Contract Award on Date June 25, 2015.

104.2.2 Furnishing of Permits

The following paragraphs are added:

The Authority shall provide the Subsurface Wastewater Disposal System permit. See related Subsection 105.8.2, Permit Requirements (Environment).

The Contractor shall build time into his schedule, and permit access to the work, for the required Subsurface Wastewater Disposal System permit inspections. The Contractor shall coordinate with the Resident so the required Subsurface Wastewater Disposal System permit inspections do not impact the work progress.

104.3.8 Wage Rates and Labor Laws

The fourth paragraph under Records on GP Page 7 of 53 has been amended as follows:

A copy of each record must be filed monthly with the Maine Turnpike Authority. This information shall be sent directly to the Maine Turnpike Authority, Director of Engineering and

Building Maintenance, Attention: Wage Rate Records, 2360 Congress Street, Portland, ME 04102. The records shall note the Maine Turnpike Contract Number.

The fair minimum hourly rates determined by the State of Maine Department of Labor for this Contract are as follows:

THIS DOCUMENT MUST BE CLEARLY POSTED AT THE PERTAINING STATE FUNDED PREVAILING WAGE CONSTRUCTION SITE

State of Maine
Department of Labor
Bureau of Labor Standards
Wage and Hour Division
Augusta, Maine 04333-0045
Telephone (207) 623-7906

Wage Determination - In accordance with 26 MRSA §1301 et. seq., this is a determination by the Bureau of Labor Standards, of the fair minimum wage rate to be paid laborers and workers employed on the below titled project.

Title of Project --------Falmouth Spur Toll Plaza ORT Conversion 2015.13

Location of Project –Falmouth, Cumberland County

2015 Fair Minimum Wage Rates
Heavy & Bridge Cumberland County

Occupation Title	Minimum Wage	Minimum Benefit	Total	Occupation Title	Minimum Wage	Minimum Benefit	Total
Asphalt Raker	$14.00	$0.00	$14.00	Line Erector - Power/Cable Splicer	$28.50	$8.40	$36.90
Backhoe Loader Operator	$18.00	$2.23	$20.23	Loader Operator - Front-End	$17.50	$3.02	$20.52
Boom Truck (Truck Crane) Operator	$22.50	$0.00	$22.50	Mechanic- Maintenance	$22.78	$3.99	$26.77
Bulldozer Operator	$18.00	$2.77	$20.77	Mechanic- Refrigeration	$22.00	$4.43	$26.43
Carpenter	$22.00	$2.31	$24.31	Millwright	$24.73	$3.42	$28.15
Carpenter - Rough	$18.03	$2.82	$20.85	Painter	$16.00	$0.00	$16.00
Cement Mason/Finisher	$16.81	$0.74	$17.55	Pile Driver Operator	$22.93	$4.29	$27.22
Communication Equip Installer	$23.57	$5.63	$29.20	Pipe/Steam/Sprinkler Fitter	$21.50	$4.30	$25.80
Comm Transmission Erector-Microwave & Cell	$18.00	$2.92	$20.92	Pipelayer	$23.06	$9.55	$32.61
Crane Operator =>15 Tons)	$24.35	$4.12	$28.47	Plumber (Licensed)	$24.00	$3.63	$27.63
Crusher Plant Operator	$18.65	$3.62	$22.27	Plumber Helper/Trainee (Licensed)	$17.88	$2.39	$20.27
Diver	$23.00	$8.25	$31.25	Propane & Natural Gas Servicer & Inst	$24.00	$3.13	$27.13
Driller - Rock	$17.50	$4.86	$22.36	Pump Installer	$22.00	$2.70	$24.70
Earth Auger Operator	$22.50	$10.46	$32.96	Reclaimer Operator	$20.75	$10.84	$31.59
Electrician - Licensed	$28.00	$14.20	$42.20	Rigger	$20.00	$3.18	$23.18
Electrician Helper/Cable Puller (Licensed)	$17.50	$8.16	$25.66	Roller Operator - Earth	$12.50	$4.76	$17.26
Excavator Operator	$20.75	$3.38	$24.13	Roller Operator - Pavement	$18.75	$5.25	$24.00
Fence Setter	$14.00	$0.00	$14.00	Screed/Wheelman	$17.00	$3.42	$20.42
Flagger	$9.00	$0.00	$9.00	Truck Driver - Light	$17.00	$1.46	$18.46
Ironworker - Reinforcing	$20.00	$1.23	$21.23	Truck Driver - Medium	$12.25	$0.93	$13.18
Ironworker - Structural	$23.70	$1.36	$25.06	Truck Driver - Heavy	$16.00	$2.34	$18.34
Laborers (Incl.Helpers & Tenders)	$15.00	$1.04	$16.04	Truck Driver - Tractor Trailer	$20.16	$3.31	$23.47
Laborer - Skilled	$17.05	$2.79	$19.84				

The Laborer classifications include a wide range of work duties. Therefore, if any specific occupation to be employed on this project is not listed in this determination, call the Bureau of Labor Standards at the above number for further clarification.

Welders are classified in the trade to which the welding is incidental.

Apprentices - The minimum wage rate for registered apprentices are those set forth in the standards and policies of the Maine State Apprenticeship and Training Council for approved apprenticeship programs.

Posting of Schedule - Posting of this schedule is required in accordance with 26 MRSA §1301 et. seq., by any contractor holding a State contract for construction valued at $50,000 or more and any subcontractors to such a contractor.

Appeal - Any person affected by the determination of these rates may appeal to the Commissioner of Labor by filing a written notice with the Commissioner stating the specific grounds of the objection within ten (10) days from the filing of these rates with the Secretary of State.

Determination No: HB-017-2015

Filing Date: May 5, 2015

Expiration Date: 12-31-2015

A true copy

Attest: _____

Steve Greeley
Director
Workplace Safety & Health Division

BLS 424HB (R2015) (Heavy & Bridge Cumberland)

THIS DOCUMENT MUST BE CLEARLY POSTED AT THE PERTAINING STATE FUNDED PREVAILING WAGE CONSTRUCTION SITE

State of Maine
Department of Labor
Bureau of Labor Standards
Wage and Hour Division
Augusta, Maine 04333-0045
Telephone (207) 623-7906

Wage Determination - In accordance with 26 MRSA §1301 et. seq., this is a determination by the Bureau of Labor Standards, of the fair minimum wage rate to be paid laborers and workers employed on the below titled project.

Title of Project --------Falmouth Spur Toll Plaza ORT Conversion 2015.13

Location of Project –Falmouth, Cumberland County

2015 Fair Minimum Wage Rates

- Highway & Earthwork Cumberland County

Occupation Title	Minimum Wage	Minimum Benefit	Total	Occupation Title	Minimum Wage	Minimum Benefit	Total
Asphalt Raker	$16.00	$0.48	$16.48	Ironworker - Reinforcing	$20.00	$1.23	$21.23
Backhoe Loader Operator	$19.50	$0.71	$20.21	Ironworker - Structural	$22.65	$6.06	$28.71
Bricklayer	$23.24	$1.80	$25.04	Laborers (Incl.Helpers & Tenders)	$12.50	$0.71	$13.21
Bulldozer Operator	$18.40	$3.11	$21.51	Laborer - Skilled	$15.50	$3.60	$19.10
Carpenter	$19.00	$1.75	$20.75	Line Erector - Power/Cable Splicer	$27.42	$8.05	$35.47
Carpenter - Rough	$24.00	$1.90	$25.90	Loader Operator - Front-End	$17.00	$2.68	$19.68
Cement Mason/Finisher	$16.81	$0.74	$17.55	Mechanic- Maintenance	$18.00	$3.08	$21.08
Concrete Pump Operator	$19.00	$3.35	$22.35	Painter	$16.75	$3.50	$20.25
Crane Operator =>15 Tons)	$24.00	$4.81	$28.81	Paver Operator	$19.88	$1.57	$21.45
Crusher Plant Operator	$18.00	$2.85	$20.85	Pipelayer	$15.16	$1.84	$17.00
Diver	$23.00	$8.25	$31.25	Pump Installer	$22.00	$2.70	$24.70
Driller - Rock	$17.50	$4.86	$22.36	Reclaimer Operator	$20.75	$10.84	$31.59
Earth Auger Operator	$22.50	$8.14	$30.64	Rigger	$20.00	$3.18	$23.18
Electrician - Licensed	$27.77	$13.76	$41.53	Roller Operator - Pavement	$17.00	$1.02	$18.02
Electrician Helper/Cable Puller (Licensed)	$16.39	$3.23	$19.62	Screed/Wheelman	$17.00	$4.32	$21.32
Excavator Operator	$18.38	$2.36	$20.74	Stone Mason	$17.00	$0.00	$17.00
Fence Setter	$11.00	$0.00	$11.00	Truck Driver - Light	$17.00	$1.46	$18.46
Flagger	$9.00	$0.00	$9.00	Truck Driver - Medium	$15.38	$0.48	$15.86
Grader/Scraper Operator	$20.00	$4.90	$24.90	Truck Driver - Heavy	$15.00	$1.70	$16.70
Highway Worker/Guardrail Installer	$16.80	$3.56	$20.36	Truck Driver - Tractor Trailer	$15.00	$0.53	$15.53
Hot Top Plant Operator	$20.75	$10.84	$31.59	Truck Driver - Mixer (Cement)	$14.60	$0.68	$15.28

The Laborer classifications include a wide range of work duties. Therefore, if any specific occupation to be employed on this project is not listed in this determination, call the Bureau of Labor Standards at the above number for further clarification.

Welders are classified in the trade to which the welding is incidental.

Apprentices - The minimum wage rate for registered apprentices are those set forth in the standards and policies of the Maine State Apprenticeship and Training Council for approved apprenticeship programs.

Posting of Schedule - Posting of this schedule is required in accordance with 26 MRSA §1301 et. seq., by any contractor holding a State contract for construction valued at $50,000 or more and any subcontractors to such a contractor.

Appeal - Any person affected by the determination of these rates may appeal to the Commissioner of Labor by filing a written notice with the Commissioner stating the specific grounds of the objection within ten (10) days from the filing of these rates with the Secretary of State.

Determination No: HI-090-2015

Filing Date: May 5, 2015

Expiration Date: 12-31-2015

A true copy

Attest: _____

Steve Greeley
Director
Workplace Safety & Health Divsion

BLS 424HI (R2015) (Highway & Earthwork Cumberland)

104.4.4 Request for Information (RFI)

This Subsection is amended by the addition of the following:

RFI's shall be submitted on company letterhead or on a standard company form with a tracking number. The General Contractor shall maintain a corresponding RFI log.

RFI's may be attached to an e-mail, but shall not be in the form of an e-mail, and at a minimum, must reference the subject Plan or Specification in question.

RFI's with multiple questions may be treated as a submittal and the allowed 21 calendar days for review and response will govern.

104.4.6 Utility Coordination

This Subsection is amended by the addition of the following:

The Contractor shall build time into his schedule, and permit access for Subsurface Wastewater Disposal System permit inspections. The Contractor shall coordinate with the Resident so the required Building and Subsurface Wastewater Disposal System permit inspections do not impact the work progress.

These Special Provisions outline the arrangements which have been established by the Authority for coordination of the work to be accomplished by the utilities. The scope and schedule of utility relocation work is noted herein. The Contractor shall plan and conduct his work accordingly.

General

Utility working days are Monday through Friday, conditions permitting. Times are estimated on the basis of a single crew for each utility. Any times and dates mentioned are estimates only and are dependent upon favorable weather, working conditions, and freedom from emergencies. The Contractor shall have no claim against the Authority if they are exceeded.

The Contractor must comply with all OSHA regulations pertaining to work adjacent to utility wires. The Contractor shall plan and conduct his work accordingly.

Existing utilities at the site include Maine Turnpike Authority. The Authority will be responsible for contracting Dig Smart to locate their facilities.

AERIAL AND UNDERGROUND UTILITIES

WATER LINE:

Portland Water District
Customer Service
(207)761-8310

PROPANE:

Downeast Energy is the MTA's supplier,
MTA owns the propane tanks

LIGHTING & TOLL EQUIPMENT

Maine Turnpike Authority
2360 Congress Street
Portland, ME 04101
(207) 871-7771

ELECTRIC:

Central Maine Power
83 Edison Drive
Augusta, ME 04336
(800) 750-4000

COMMUNICATIONS

Northern New England Telephone Operations LLC
5 Davis Farm Road
Portland, ME 04103
(207) 272-7993
Attn: Marty Pease

CENTRAL MAINE POWER (CMP) NORTHERN NEW ENGLAND TELEPHONE (NNNTO)

CMP and NNNTO have service that comes in on the south side of the plaza and goes underground across the spur to the Plaza building

Contractor shall notify CMP and NNNTO two (2) weeks in advance of any work impacting these services.

CMP and NNNTO will install overhead temporary services in Phase 1A per Plans.

MAINE TURNPIKE AUTHORITY (AUTHORITY)

Underground electrical and communication conduit, operated by the Maine Turnpike Authority, does exist within the project limits. These utilities are live and the contractor shall coordinate construction activity with the Authority per the Plans. This will involve, as part of this contract, the contractor utilizing existing infrastructure, removing existing infrastructure, and installing new infrastructure.

PORTLAND WATER DISTRICT

Portland Water District is the utility that provides water for the toll building. The Contractor shall Contact customer service 2 days in advance to request the water shut off. The water shut off is located within the ROW of the Falmouth Public Works facilities on Middle Road/Route 9.

104.4.7 Cooperation With Other Contractors

This Subsection is amended by the addition of the following:

The Maine Turnpike will have the following adjacent work during this Contract:

Contract 2015.01, Pavement Rehabilitation, Guardrail and Clear Zone Improvements, and Route 9 Bridge Repairs. The contract is scheduled for substantial completion on the Falmouth Spur on July 30, 2105 excluding Route 9.

The following Subsection is added:

105.2.4.2 Lead Paint

The Contractor shall note that the existing structure may contain lead based paint. The Contractor shall institute every precaution when working with materials coated with lead based paints.

Lead Paint Removal

The Contractor is required to remove and dispose of lead based paint and paint residue before cutting, grinding, drilling and sandblasting existing materials in preparation of completing the work except as provided under the Drilling of Lead Based Paint subsection in this Special Provision. All lead based paint and paint residue shall be removed, handled, stored and disposed of in conformance with all local, State and Federal laws and regulations governing lead based paint. The Contractor may use his own properly trained employees to abate the lead based paint in accordance with applicable regulations and requirements; or he may hire a licensed lead abatement subcontractor to abate the lead based paint in accordance with applicable regulations and requirements.

The Contractor, or licensed lead abatement subcontractor, shall submit a Project specific Health and Safety (OSHA) Plan and a Hazardous Waste Management Plan (EPA/DEP) a minimum of two (2) weeks prior to undertaking the removal of lead based paint.

Drilling of Lead Based Paint

The Contractor may drill lead based painted steel, without lead based paint removal, provided the Contractor collects and recycles the drill cuttings at a licensed metal recycling facility. If the Contractor chooses not to collect and recycle the drill cuttings at a licensed metal recycling facility he will be required to abate the area where drilling is to occur in full accordance with the lead based paint removal, storage and disposal requirement of this Special Provision.

The Authority will require a signed statement from the Contractor stating the drill cuttings were collected and recycled at a licensed metal recycling facility and the name the recycling facility.

Health and Safety Plan

The Health and Safety Plan submittal shall describe how the Contractor/licensed lead abatement subcontractor intends to remove the lead based paints; and shall outline how the Contractor/licensed lead abatement subcontractor will adhere to all Federal, State and local ordinances which govern worker (including authorized representatives of the Authority) exposure to lead based paints, and ensure the safety of the workers performing lead removal. Copies of current worker training certificates (OSHA), medical screenings, and respirator fit up shall be included in the submittal.

Hazardous Waste Management Plan

The Hazardous Waste Management Plan submittal shall describe how the Contractor/licensed lead abatement subcontractor intends to manage the hazardous waste that will be generated, temporarily accumulated, stored, transported off-site and disposed; adhere to ordinances associated with the management of hazardous wastes; and ensure protection of the environment.

The Hazardous Waste Management Plan shall:

- Be signed by the Contractor;
- State whether Contractor or licensed lead abatement subcontractor will be undertaking the work; and,
- State whether abated lead materials will be accumulated and stored on-site (required if the Contractor is not licensed by DEP/EPA to transport and temporarily store lead based hazardous waste), or be removed in HEPA vacuums daily to the removal Contractor's licensed waste storage facility (permitted only if the Contractor is licensed by DEP/EPA to transport and temporarily store lead based hazardous waste).

If abated lead materials are to be accumulated and stored on-site, the Hazardous Waste Management Plan shall include (at a minimum) the following:

- Container size and labeling standards:
  - Containers must be 55 gallons or less
  - Containers must have the labeled "HAZARDOUS WASTE"

- Accumulation requirements:
  - Labels will include accumulation start date and container full date
  - On-site storage will not exceed 180 days from full date
  - Total on-site storage shall not exceed 55 gallons or 220 pounds

- Inspections (including frequency and checklist):
  - Inspections shall be performed each day the Contractor works
  - Inspection checklist shall be similar to MaineDEP format (Refer to Appendix A1 of MaineDEP Handbook for Hazardous Waste Generators – January 2003)
- Transport and DOT "pre-transport requirements":
  - Specify the licensed hazardous waste transporter to be used
  - Obtain Generator's EPA ID No. (typically a provisional ID # is obtained through the licensed hazardous waste transporter)
  - USDOT – approved containers must be used for shipment
  - Schedule the Authority for signing Hazard Waste Manifest

- Recordkeeping requirements:
  - Describe where at the jobsite the required records (e.g., inspection logs, training records, Lead Determination report/hazardous waste characterization, etc.) will be maintained
  - Describe how and when copies of the required documents specified above will be transferred to the Authority's Environmental Services Coordinator's office

The Contractor/licensed lead abatement subcontractor, shall provide documentation to the Authority that the employees who will be removing, handling, managing and/or directly supervising the hazardous waste operations have received required Resource Conservation and Recovery Act (RCRA) hazardous waste management training, and all training is current.

The lead based hazardous waste must remain on-site, unless the removal is being performed by a licensed lead abatement subcontractor that collects the paint residue in HEPA vacuums and is licensed by DEP/EPA to transport and temporarily store lead based hazardous waste at the removal Contractor's licensed waste storage facility. Both on-site and licensed off-site lead based hazardous waste storage facilities require secure storage and daily inspection of the stored waste.

If the removal Contractor is not licensed by DEP/EPA to transport and temporarily store lead based hazardous waste off-site, then an EPA licensed Hazardous Waste transporter(s) shall be used to remove hazardous waste from the site. All removal and disposal documentation will be required when the hazardous waste leaves the site. As the Generator, only the Authority's Environmental Services Coordinator or his trained designee shall sign waste manifests when material is removed from the Project site.

The removal, storage, handling, transporting, and disposal of lead based paint and lead based paint residue will not be measured separately for payment, but shall be incidental to the various Contract work items.

The following Subsection is added:

105.2.4.3 Asbestos

The Contractor shall note that the existing structure(s) have undergone Asbestos Containing Material Determination Survey(s), and have not tested positive for asbestos containing materials. A copy of the Asbestos Containing Determination Survey report is attached as Appendix B.

Whereas no Asbestos Containing Material Determination Survey is 100 percent accurate, demolition activities shall be accomplished under the supervision of a "competent person", as defined by OSHA, to evaluate whether materials uncovered/exposed are asbestos containing materials. If the "competent person" observes, or believes he has observed, asbestos containing materials while demolition is underway, the "competent person" shall immediately stop the demolition, secure the site and notify the Project Resident/Inspector.

The Owner shall have the area sampled and analyzed for asbestos containing materials. No work will be permitted in the area until samples show that no asbestos containing materials exists, or if asbestos containing materials are present, the conditions are abated. Compensation for delays resulting from stopping the demolition, testing for asbestos containing materials, and abating asbestos containing materials, if they exist, shall be limited to a time extension.

The Contractor shall note all conduit associated with lighting shall be assumed to contain asbestos. The removal and disposal of the asbestos containing materials is specified in Special

Provision 202, Removing Structure and Obstructions (Removing Asbestos Containing Materials).

105.2.4.4 Universal Waste

The Maine Turnpike Authority shall be responsible for the removal of universal waste items required in coordination with the demolition work required by the Contractor.

Prior to the commencement of demolition activities, the Contractor shall coordinate with the Resident and Maine Turnpike Authority to identify the timing of when universal waste removal will be required. Contractor should anticipate up to two days of schedule for the Maine Turnpike Authority to perform this work in advanced of associated demolition.

105.2.6 Use of Explosives

This Subsection is deleted in its entirety and replaced with the following:

The use of explosives is permitted, however, prior to any blasting, the Contractor must submit a detailed blasting plan to the Resident at least three (3) weeks prior to commencing drilling and blasting operations. The blasting plan shall contain the following information:

a. Written evidence of licensing, experience and qualifications of the blasters who will be directly responsible for the blasting operations;

b. Name and qualifications of the person(s) responsible for design and directing the blasting. The submittal shall document by project lists that the person has the required experience in controlling blast vibrations in blasting rounds of the type required on this Project;

c. Site plan with location of nearest structures and abutters. Plan shall also show the location of all private wells;

d. Sequence and schedule of blasting rounds;

e. Plan of each blast showing hole-spacing and delay pattern;

f. Diameter and depth of each hole;

g. Amount of explosive per hole;

h. Total pounds of explosives per delay;

i. Total amount of explosives per blast;

j. Type of non-electric delays to be used;

k. Amount of stemming in each hole;

l. Type of explosive to be used;

m. Type and location of seismograph(s) to be used. A listing of instrumentation for the purpose of monitoring vibrations and airblast over pressure levels complete with performance specifications and user manuals supplied by the manufacturer;

n. Recent calibration certificate(s) (within previous six months) for the proposed blast monitoring instrumentation;

o. Soil and rock profile in blast zone;

p. Scale distance to the nearest abutting structure;

q. Size of blasting mats and cover to be used;

r. Safety precautions to be followed; and,

s. Location of safe zones for MTA Toll Attendants during blasting operations.

After submission of the blasting plan, but prior to the start of the blasting program, the blasting Contractor shall meet with the Resident, Maine Turnpike Authority officials, State Police (turnpike barracks), Town of Falmouth Fire officials, and affected utility representatives. The purpose of the meeting is to advise them of their blasting plan and schedule, accept feedback on the proposed plan, and coordinate the blasting effort.

Should field conditions warrant a change in the general blasting plan, the blasting Contractor shall provide a sketch and blasting plan details based on the actual field conditions prior to the blast for inclusion in the Project records.

The following general requirements are to be adhered to:

A. Blasting permits shall be obtained by the Contractor from all local, State and Federal agencies having jurisdictions. Blasting will not be authorized by the Resident without proper permits.

The Contractor shall comply with all applicable laws, rules, ordinances, and regulations of the Federal Government, the State of Maine, and the city or town governing the transportation, storage, handling, and the use of explosives. All labor, materials, equipment, and services necessary to make the blasting operations comply with such requirements shall be provided at no additional costs to the Authority.

The Contractor shall obtain and pay for all permits and licenses required to complete the work of this Section.

In case of conflict between regulations or between regulations and Specifications, the Contractor shall comply with the strictest applicable codes, regulations or Specifications.

Blasting agents shall comply with appropriate regulatory environmental requirements. Explosives containing perchlorates should not be used.

B. Obtain the services of a qualified vibration and blasting expert to monitor the blasting. All seismographic instruments shall be capable of producing a permanent record of the information required to determine the particle velocity at any time during all phases of the blasting operation. A copy of all recording shall be furnished to the Authority within two (2) working days after a blast. Seismographic recordings shall be taken at the critical locations and additional instruments shall be furnished, located and operated as deemed necessary by the Resident.

Persons responsible for blasting shall be Licensed Blasters in the State of Maine and shall have had acceptable experience in similar excavations in rock and controlled blasting techniques.

C. Non-electric detonation systems shall be used. Electric blasting caps will not be permitted.

D. The Contractor shall conduct all blasting activity in such a manner that the peak particle velocity of ground vibration, measured at the locations of the nearest structures to the blast, does not exceed the "safe limits" recommended by the U.S. Bureau of Mines in FIGURE B of BUMINES RI 8507, as follows:

FIGURE B - BUMINES RI 8507

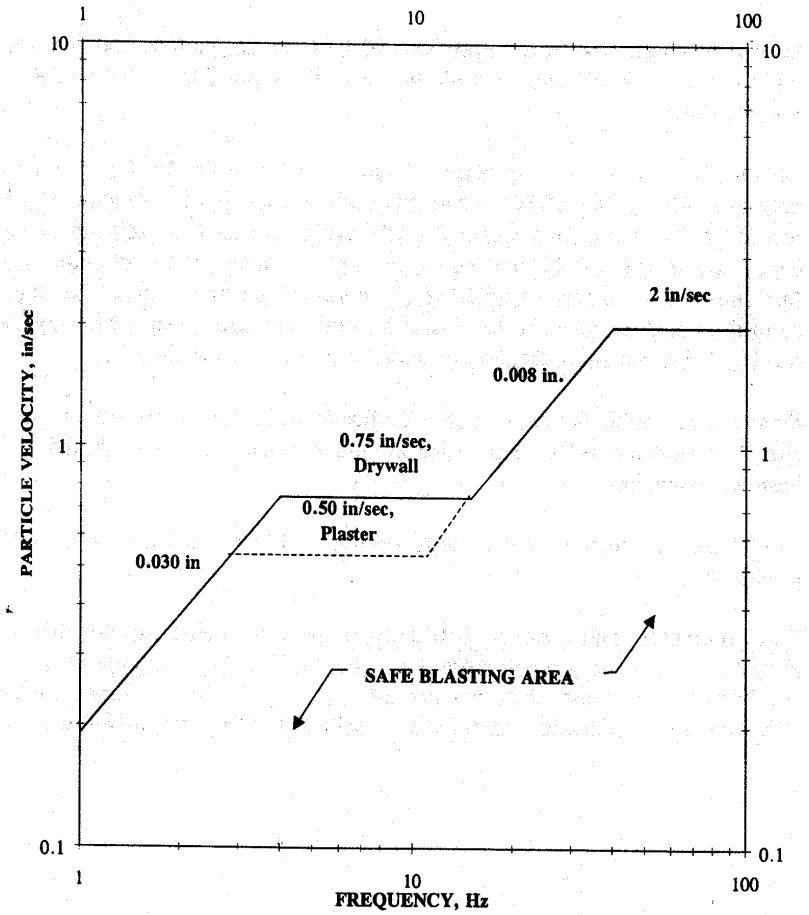

Figure B-1 - Safe levels of blasting vibration for houses using a combination of velocity and displacement

ALTERNATIVE BLASTING LEVEL CRITERIA

E. The Contractor shall conduct all blasting activity in such a manner that the peak airblast overpressure measured at the locations of the nearest above ground occupied structures to the blast (considering wind direction) does not exceed 0.014 psi.

F. Scaled distance factors permitted for various distances from blast:

Distance from blast site (ft)	Scaled distance factor to be used without seismic monitoring (ft)
0* to 300	50
300 to 5000	55
5000 and beyond	65

*Except that seismic monitoring will be required for any blast within 50 feet of a structure regardless of charge size or arrangement.

G. The Contractor shall advise the Resident at least five (5) working days in advance of the dates on which he proposes to perform blasting operations, providing an approximate hour for the Resident's approval. The Authority will provide police at the turnpike site, who will stop traffic in both directions while the blast is detonated. The Contractor will be responsible for obtaining the necessary permits and police or flaggers required to close local streets during periods of blasting.

H. Safety Precautions

1. Clearing Danger Area Before Blasting - no blasting shall be permitted until ***all*** personnel in the danger area have been removed to a place of safety. A loud, audible warning system, devised and implemented by the Contractor, shall be sounded before each blast. The Contractor shall familiarize all personnel on the Project, Authority, Police Officers, Residents, and the general public with the implemented system. The danger area shall be patrolled before each blast to make certain that it has been completely cleared, and guards shall be stationed to prevent entry until the area has been cleared by the blaster following the blast.

2. Explosives shall be stored, handled and employed in accordance with Federal, State and local regulations.

3. No explosives, caps, detonators or fuses shall be stored on-site during non-working-hours.

4. Blasting mats may be used to cover the top and vertical face of all blasts in order to minimize the possibility of excessive throw of rock. The use of blasting mats is required when blasting in the plaza limits.

5. The Contractor is advised that the Authority's Maintenance Forces and State Police use two-way radios in the vicinity of the Project. These radios cannot

be turned off during loading operations. Therefore, non-electric detonation systems shall be used. Electric blasting caps will *not* be permitted.

6. The Contractor shall be responsible for determining any other safety requirements unique to blasting operations at these particular sites so as not to endanger life, property, utility services, any existing or new construction, or any property adjacent to the site.

   a. Vibration monitoring should be conducted at nearby sensitive utilities and structures, including bridges, during blasting. Utility operators should be contacted to obtain vibration criteria to limit the potential for damage to existing utilities. Vibration monitoring should be conducted to confirm the vibration criteria are not exceeded.

7. No requirements of, or omissions to, require any precautions under this Contract shall be deemed to limit or impair any responsibility or obligations assumed by the Contractor under or in connection with this Contract; and the Contractor shall at all times maintain adequate protection to safeguard the public and all persons engaged in the work, and shall take such precautions as will accomplish such end, without undue interference to the public. The Contractor shall be responsible for and pay for any damage to adjacent roadways or structures resulting from work executed under this Section.

8. The Contractor is required to secure all travelways, entrances and exits within 300 feet of the blast zone. No vehicles or pedestrians will be allowed within the 300-foot-zone until the blast is complete, all debris is cleaned from the roadways, and the site is deemed safe by the Resident.

I. <u>Pre-Production Test Blast</u>

1. The Contractor shall conduct a test blast prior to production blasting. The test blast shall include the same perimeter control (presplit or cushion blasting) and production blast hole spacing, loading, and delays as proposed in the blast plan and shall be conducted over a minimum 25 foot long section of the rock cut. The rock slope created by the test blast shall be exposed for review by the Resident. Production blasting shall not continue without approval of the test blast results by the Resident.

2. If the test blast does not show an acceptable slope condition, a revised Blast Plan shall be provided by the Contractor with modifications to the hole spacing, loading and/or delay, and another test blast shall be conducted.

3. Test blasts shall be conducted at any time during the project in which changes to the blast design are proposed.

J. <u>General Blasting Procedures</u>

1. The time during which explosives may be restricted to non-peak travel periods. Blasting is permitted Monday through Thursday 9:30 a.m. – 3:00

p.m. and Friday 9:30 a.m. – 11:59 a.m. The use of explosives is not permitted on weekends (Saturday and Sunday), holidays, on the eve of a holiday, or during non-daylight-hours unless approved in writing by the Resident. In order to minimize traffic disruptions, the Contractor shall schedule blasting such that all disrupted traffic shall be cleared between any two successive blasts detonated anywhere on the Project. The Contractor will be allowed as many traffic stoppages as can be cleared in the designated blasting window, provided the blast schedule can be safely coordinated. The Contractor will be required to stop traffic on the mainline and all ramps for all blasts. The Authority may withhold permission to blast if, in the opinion of the Authority, actual or anticipated traffic volumes will produce mainline or local road congestion that cannot be cleared in a reasonable amount of time. The Contractor's blasting operations shall be performed using extreme care to minimize the inconvenience and interruption to traffic and damage to the existing pavement, structures and surrounding areas.

2. The Contractor shall have sufficient equipment available on-site to clear the pavement of blast rock, if it is necessary. At a minimum, the Contractor shall have a vehicle to sweep the pavement and a half-ton pickup equipped with a plow. The blast will not be allowed to occur if this equipment is not present.

3. The Contractor shall coordinate all blasting with the Resident on-site who shall determine in advance when the charges may be set.

4. Blast hole diameter shall not be greater than three inches.

5. No free flowing, pourable or pumpable explosives shall be used unless approved by the Resident. All explosives shall be in cartridges or other semi-rigid containers.

6. Mainline traffic control during blasting periods shall be in accordance with the Plans and Specifications. All temporary signage shall be removed when the daily blasting period is over. Traffic control signs shall meet the requirements of Section 652 and will be paid for under Item 652.35, Construction Signs. The setup and removal of signs and the coordination with State Police and local Municipalities for mainline blasting will be included for payment under Item 652.361, Maintenance of Traffic Control Devices.

7. Local traffic control during blasting periods shall be in accordance with MUTCD and local requirements. All temporary signage shall be removed when the daily blasting period is over. Local traffic control signs shall meet MUTCD requirements and will be measured for payment as construction signs. Providing flaggers, or local police officers if required, on local roads for mainline and ramp blasting, will be measured for payment. The payment for local police will be paid as a direct cost with no markup allowed by the Contractor. Coordination with the local officials for mainline or ramp blasting will not be paid for separately, but shall be incidental to the Rock Excavation item.

8. The Contractor shall report to the Resident, in writing, all blasting complaints received by the Contractor within 24-hours of receipt. Each blast complaint report shall include the name and address of the complainant, time received, date and time of blast complained about, and a description of the circumstances which led to the complaint. Upon receipt of a written complaint alleging damage from the blasting, the Contractor's vibration and blasting consultant and/or a representative of the blaster's insurance company shall investigate the claim and a written report shall be issued to the complainant, with a copy to the Resident, of the results of the investigation and the response of the Contractor. This written report shall be received by the complainant and Resident within 15 work days of receipt of the written complaint.

9. The maximum time for which traffic may be stopped at any single time shall be eight (8) minutes when blasting outside of station 138+50 to 144+50. This duration shall be measured as the time between the time that the last car passes the Resident, until the time the Resident determines that all travel lanes are cleared of blast debris. The Contractor shall reduce the size of the blast, change the design and method of the blast, use more mats, or otherwise alter the blasting so that the traffic is not stopped for more than eight minutes. If, due to the throw of rock onto the highway or ramps or other blasting related activities, traffic is stopped for more than eight minutes, the Contractor shall pay a penalty of $500.00 per minute for every minute traffic is stopped in excess of the eight minute limit. The penalty shall be measured separately on the eastbound and westbound roadway. Total liquidated damage shall be deducted from the next pay estimate. Whenever the volume of traffic is excessive such that an eight minute interruption would cause objectionable congestion, in the opinion of the Resident, the hours during which blasting may occur may be further restricted.

10. The maximum time for which traffic may be stopped at any single time shall be ten (10) minutes when blasting between station 138+50 to 144+50. This duration shall be measured as the time between the time that the last car passes the Resident, until the time the Resident determines that all travel lanes are cleared of blast debris. The ten minutes shall also include the time needed for the Toll Attendants to move from their booths or the plaza building to the designated safe zone and back to their booth prior to traffic being released from the stoppage. The Contractor shall reduce the size of the blast, change the design and method of the blast, use more mats, or otherwise alter the blasting so that the traffic is not stopped for more than ten minutes. If, due to the throw of rock onto the highway or ramps or other blasting related activities, traffic is stopped for more than ten minutes, the Contractor shall pay a penalty of $500.00 per minute for every minute traffic is stopped in excess of the ten minute limit. The penalty shall be measured separately on the ramps and the northbound and southbound roadway. Total liquidated damage shall be deducted from the next pay estimate. Whenever the volume of traffic is excessive such that a ten minute interruption would cause objectionable congestion, in the opinion of the Resident, the hours during which blasting may occur may be further restricted.

J. Pre-Blast Condition Survey

The Contractor shall provide a pre-blast survey as described below:

Prior to start of excavation (earth/rock) or blasting work, the Contractor shall conduct a pre-blast condition survey of all existing structures, including bridges, and conditions on the site, adjacent to the site, or in the vicinity of the site. This survey shall extend to such structures or conditions as may be affected by the Contractor's construction operations. As a minimum, condition surveys shall be performed on all structures within 500 feet of anticipated blasting areas. The Contractor is responsible for the following:

1. Coordinate activities, issue notices, obtain clearances and provide whatever photographic and secretarial assistance is necessary to accomplish the survey.

2. Give notice, in writing, to the owner of the property concerned and tenants of the property. Advise in notice, the dates on which surveys are to be made so that they may have representatives present during the examination. Provide copies of all notices to the Resident.

3. The survey shall consist of a description of the interior and exterior conditions of the various structures examined. Descriptions shall locate any existing cracks, damage or other defects existing, and shall include such information so as to make it possible to determine the effect, if any, of the construction operations on the defect. Where significant cracks or damage exist, or for defects too complicated to describe in words, photographs shall be taken and made part of the record.

4. The survey shall include a test of all private wells in the area. Water quality tests shall be obtained so that a baseline condition may be developed.

   Contractor's record of the pre-blast condition survey shall consist of written documentation and photographs of the conditions identified, or a good quality videotape survey with appropriate audio description of conditions and defects. Prior to start of work, one copy of the Contractor's record of conditions survey shall be submitted to the Resident for review and retention.

   Upon completion of all excavation (earth/rock) and blasting work, the Contractor shall make an examination similar to the pre-construction survey of any properties, structures, and conditions where complaints of damage have been received or damage claims have been filed. Notice shall be given to all interested parties so that they may be present during the final examination. Records of the final examination shall be distributed the same as the original preconstruction survey.

K. Payment

No separate measurement or payment will be made for the work outlined in this Section including the detailed blasting program, pre-blast and post-blast surveys, blasting and permit acquisitions. All cost associated with this work shall be incidental to the Rock Excavation item(s).

L. Indemnity

Notwithstanding full compliance with these Specifications, approval of blasting plan, and successful limitation to maximum peak particle velocity noted above, the Contractor shall be solely responsible for any damage, direct or indirect, arising from blasting and shall hold the Authority and Resident harmless from any costs, liens, charges, claims or suits, including the costs of defense, arising from such damage, real or alleged. The Authority and Resident shall be additionally-named insured on any insurance policy covering blasting carried by the Contractor, and this requirement shall also be enforced on any subcontractor.

The Contractor shall provide a pre-blast and post-blast survey including photographs. An inspection of all facilities within and adjacent to the Contract limits shall be made to determine any changes that may occur due to the blasting operations.

The Resident's approval shall not relieve the Contractor of any responsibility for any hazards or damages related to this work. The use of explosives shall conform to all Federal and State laws and regulations. Explosives must not be stored within the turnpike right-of-way. Explosives shall be in the care of competent watchmen at all times, and placement and detonation shall be performed under the direction of a qualified blaster licensed in the State of Maine.

105.3 Traffic Control and Management

See Special Provision Section 526, Concrete Barrier.

See Special Provision Section 652, Maintenance of Traffic.

105.4.3 Maintenance During Winter Construction

This Subsection is amended by the addition of the following:

The Contractor is responsible for the maintenance of erosion control and traffic control devices. The Authority will be responsible for winter road maintenance for lanes open to traffic. The Authority will also be responsible for winter road maintenance for the ORT lanes after Substantial Completion.

The Contractor is also responsible for snow and ice removal from all drainage paths and catch basins located behind traffic control devices, in order to maintain drainage away from the paved travel way.

105.5.1 General Requirements

Construction Access

The Contractor shall construct a stabilized construction entrance in accordance with the Best Management Practices at all locations where construction vehicles will exit and/or enter existing paved shoulders or travel ways from non-paved areas. The Resident shall approve of the locations. Additional stabilized construction entrances may be required due to the Contractor's operations as well as site conditions. The construction and maintenance of the stabilized construction entrance including frequent sweeping of the paved surfaces shall be incidental to the Contract.

105.7.4 Submittal Requirements

The following paragraph is added:

In addition to the hardcopy requirement, the Contractor shall also make submittals in PDF electronic file format via email. Submittals shall be accompanied by a cover sheet, which identifies the submittal number, subject date, and any revision numbers associated with the submittal.

105.8.1 Temporary Soil Erosion and Water Pollution Control

This Subsection in the General Provisions is deleted and replaced with the following:

The Contractor shall certify in writing to the Resident that an On-Site Responsible Party (OSRP) has been trained and is knowledgeable in erosion and sediment control (ECS) through the MaineDEP's Non-Point Source Training Center, or an equivalent program, or is licensed in the State of Maine as a Professional Engineer, Landscape Architect or Soil Scientist. Proof of certification for the OSRP, and any other Contractor employees charged with conducting ESC inspections, must be submitted to the Authority's Environmental Coordinator prior to starting work.

Spill Prevention Control and Countermeasure (SPCC) Plan

Any areas where petroleum products, oils or non-petroleum hazardous materials are handled or stored will require a Spill Prevention Control and Countermeasure (SPCC) Plan. These materials may not be stored or handled in areas of the site draining to an infiltration area. The Plan will be submitted to the Resident before construction begins. In addition to petroleum products and hazardous materials, controls must be used to prevent additional pollutants (i.e., fertilizers, pesticides, salt/brine, litter, construction demolition debris, etc.) from being discharged from materials on-site, including storage practices, to minimize exposure of the materials to stormwater, and appropriate spill prevention, containment, and response planning and implementation. The Plan shall provide the following information at a minimum:

1. The name and emergency response numbers (telephone number, cellular phone and pager numbers, if applicable) of the Contractor's representative responsible for spill prevention and response;

2. Description of handling or storage location noting setbacks from water bodies where relevant. Significant sand and gravel aquifers and other sensitive resources, including infiltration areas, must be avoided wherever possible;

3. Description of storage and containment facilities, such as dikes, berms, sumps, and other forms of secondary containment that prevent discharge to groundwater or surface water;

4. Description of equipment and/or materials used to prevent discharges (including sorbent materials);

5. Preventative measures to minimize the possibility of a spill; and,

6. Contingency plan if spill should occur.

The approved plan must be posted at the Project site. All personnel working in the area are required to read and be familiar with the plan.

There shall be no separate payment for preparation of a SPCC Plan acceptable to the Resident and preparation shall be incidental to the work.

Notification of Authority of Hazardous Material Spills

In addition to MaineDEP reporting requirements for spills greater than five (5) gallons, the Contractor shall notify the on-site Resident Inspector. The on-site Resident Inspector shall notify the Maine Turnpike Radio Room at 207-871-7701. When the on-site Resident Inspector is not available, the Contractor shall notify the Maine Turnpike Radio Room directly at 207-871-7701.

In addition to MaineDEP reporting requirements for all spills where any stream or water body is threatened, the Contractor shall notify the on-site Resident Inspector. The on-site Resident Inspector shall notify the Maine Turnpike Radio Room at 207-871-7701. When the on-site Resident Inspector is not available, the Contractor shall notify the Maine Turnpike Radio Room directly at 207-871-7701.

These notification procedures shall be incorporated into the Spill Prevention Control and Countermeasure (SPCC) Plan.

Responsibility for Control and Cleanup of Hazardous Material Spills

The Contractor shall be responsible to control spills and properly cleanup, containerize, and dispose of petroleum and/or other hazardous material waste that results from the actions and/or equipment of the Contractor or his employees, subcontractors and suppliers. Chemicals, exposed to stormwater must be prevented from becoming a pollutant source.

The Contractor shall also be responsible for all direct and indirect costs associated with the control of spills and proper cleanup, containerization, and disposal of petroleum and/or other hazardous material waste that results from the actions and/or equipment of the Contractor or his employees, subcontractors and suppliers.

The following Subsections are added:

105.8.1.1 Environmental Standards

The Project will be performed in accordance with the MaineDOT Best Management Practices (BMP) latest issue. The Contractor shall fully comply with all erosion and sedimentation control requirements outlined in the BMP's or contained herein. Non-compliance with these requirements as determined by the Resident shall result in a financial penalty of $1,000 per day, per violation. Any fines assessed to the Maine Turnpike Authority as a result of the Contractor's non-compliance shall be paid by the Contractor. If the Contractor fails to pay, the cost of the fine will be deducted from monies due, or which may become due, to the Contractor under this Contract.

In the event of conflict between these Specifications and other erosion and pollution control laws, rules or regulations of other Federal, State and local agencies, the more restrictive law, rules or regulations shall apply.

The standards as described below shall be met on the Project:

105.8.1.11 Water Pollution Control Requirements

(a) General

1. The Contractor must comply with the applicable Federal, State and local laws and regulations relating to prevention and abatement of water pollution.
2. Except as allowed by an approved permit or otherwise authorized by the Authority in writing, pollutants containing construction debris including excavated material, aggregate, residue from cleaning, sandblasting or painting, cement mixtures, chemicals, fuels, lubricants, bitumens, raw sewage, wood chips, and other debris shall not be discharged into water bodies, wetlands or natural or manmade channels leading thereto and such materials shall not be located alongside water bodies, wetlands, or such channels such that it will be washed away by high water runoff. Furthermore, liquid petroleum products and other hazardous materials with the potential to contaminate groundwater may not be stored or handled in the areas of the site draining to an infiltration area, unless these portions of the site (where storage and handling of these materials) are isolated using dikes, berms, sumps and other forms of secondary containment that prevent discharge to groundwater.
3. Temporary winter stabilization must be used between November 1st and April 15th or outside of said time period if the ground is frozen or snow covered. Temporary winter stabilization involves, at a minimum, covering all disturbed soils and seeded ground that is not Acceptable Work with an approved method. Use of these methods for over-winter temporary erosion control will be paid for under the appropriate Erosion Control items included in the Contract.
4. Construction operations in water bodies or wetlands shall be restricted to the construction limits shown on the Plans and to those areas that must be entered for the construction of temporary or permanent structures, except as allowed

by approved permit or otherwise authorized by the Authority in writing. Mechanized equipment shall not be operated in water bodies or wetlands except as allowed by approved permit or otherwise authorized by the Authority in writing.

5. Upon completion of the work, water bodies or wetlands shall be promptly cleared of all falsework, piling, debris or other obstructions caused by the construction operations, except as allowed by approved permit or otherwise authorized by the Authority in writing.

(b) Earthwork

If earthwork disturbance is part of the Project scope:

1. Newly disturbed earth shall be mulched or otherwise stabilized by the end of each workday. Mulch shall be maintained on a daily basis.
2. All disturbed ditches shall be stabilized by the end of each workday. Stabilization shall be maintained on a daily basis.
3. Erosion control blanket shall be installed in the bottom of all ditches except where a stone lining is planned. Seed shall be applied prior to the placement of the blanket.
4. Permanent slope stabilization measures shall be applied within one (1) week of the last soil disturbance. Newly seeded or sodded areas must be protected from vehicle traffic, excessive pedestrian traffic, and concentrated runoff until the vegetation is well-established. If necessary, areas must be reworked and restabilized if germination is sparse, plant coverage is spotty, or topsoil erosion is evident.
5. Dust control items, other than those under Standard Specification Section 637, Dust Control, if applicable, shall be included in the plan.

105.8.1.12 Construction Requirements

1. The Contractor, to the maximum extent practicable, shall install temporary and permanent sedimentation control measures prior to conducting clearing and grubbing operations.
2. The Contractor shall conduct inspections of disturbed and impervious areas, erosion control measures, materials storage areas that are exposed to precipitation, and locations where vehicles enter or exit the site. Inspections shall be conducted: (1) at least once a week as well as before and after a storm event and prior to completing permanent stabilization measures; and (2) by a person knowledgeable of erosion and stormwater control, including the standards and conditions in the permit.
3. The Contractor shall maintain all measures in effective operating condition until areas are permanently stabilized. If BMPs need to be modified (i.e., corrective action, additional BMPs installed, etc.), implementation must be completed within seven (7) calendar days and prior to any storm event.
4. Temporary erosion control measures shall be maintained until the site is permanently stabilized with vegetation or other permanent control measures.
5. The Contractor will immediately take appropriate measures to prevent erosion or sedimentation from occurring or to correct any existing problems regardless of the time of year.

6. During periods of approved suspension, the Contractor shall inspect and maintain temporary and permanent erosion and sedimentation controls.
7. Work in wetlands is prohibited except to the minimum extent necessary for completion of the work as detailed on the Plans. Excavated and other material shall not be stockpiled in wetlands. Haybales, silt fence or other suitable barriers shall be used, where necessary, to prevent sedimentation from eroding materials.
8. Disturbance of natural resources beyond the construction limits shown on the Plans is not allowed.
9. Existing ditches shall be maintained until the new ditches are stabilized. Stone check dams shall be placed in existing ditches prior to construction as to prevent the release of sedimentation. Stone check dams shall be installed at the outlets of all existing and proposed ditches adjacent to all stream and wetlands.
10. For proposed ditches, stabilize the outlet first and build from the bottom up. Only excavate what can be stabilized or protected by the end of the work day.
11. Before permitting permanent channels to carry water, they shall be stabilized. This may require the installation of temporary erosion control BMP's or temporarily diverting flows.
12. All cross culvert outlets shall be armored before the end of the work day.
13. The Contractor's operation may require the placement of temporary pipes and fill over a ditch line to provide access to the work area. The Resident shall approve the size of the pipe. The placement and removal of the temporary access shall not be measured for payment and shall be incidental to the Excavation item.
14. Bare earth slopes shall be roughened to dissipate sheet flow. This shall be accomplished by "tracking" the slope perpendicular to the centerline. This work will not be measured separately for payment, but shall be incidental to the Excavation item.
15. Uncured concrete shall not be placed directly into the water body. Concrete may be placed in forms and shall cure at least one (1) week prior to form removal. No washing of tools, forms, etc. shall occur in or adjacent to the water body or wetland.
16. The Contractor shall contain all demolition debris (including debris from wearing surface removal, sawcut slurry, dust, etc.) and shall not allow it to discharge to any resource. Litter, construction debris, and chemicals exposed to stormwater must be prevented from becoming a pollutant source. The Contractor shall dispose of debris in accordance with Maine Solid Waste Law, Title 38 M.R.S.A., Section 1301 et. seq.
17. No wheeled or tracked equipment shall be operated in the water. Equipment operating on the shore may reach into the water with a bucket or similar extension. Equipment may NOT cross streams.
18. The Contractor shall not remove rocks from below the normal high water line of any wetland, great pond, river, stream or brook, except to the extent necessary for completion of the work and as allowed by environmental permits.

105.8.2 Permit Requirements

The Project is being constructed under the Maine Department of Environmental Protection (DEP) Natural Resources Protection Act Permit by Rule regulations Section 11 – State Transportation Facilities, updated July 15, 2009. Final permit authorization is anticipated prior to contract bid opening. An addendum will be issued acknowledging the receipt or denial of the permit; providing the actual MaineDEP permit conditions, and providing Plan and

Specification changes if required. A copy of the Section 11 – State Transportation Facilities Permit by Rule regulations are attached in Appendix A.

The Project is being permitted under Section 404 of the Clean Water Act, through the US Army Corps of Engineers Programmatic General Permit, Category 1. The Project is subject to the General Conditions of the Category 1 Authorization dated October 12, 2010 through October 12, 2015. A copy of the General Permit is attached in Appendix A.

The Contractor shall prepare a LOD plan illustrating the Contractor's proposed limit of earthwork disturbance. The LOD plan shall show all construction access locations, field office locations, material and temporary waste storage locations, as well as include the Contract limits of earthwork disturbance. All applicable erosion and sedimentation control devices needed shall be detailed on the Contractor's LOD plan and are not limited to those devices shown on the Contract LOD plan. This Plan shall be submitted for review and approval, to the Resident within 14 days of Contract award**.** Payment for creating, revising, and completing this plan shall be incidental to Item 659.10, Mobilization.

The LOD for this Contract has been estimated to be **7.62** acres.

At any time during the Contract, if the Limit of Disturbance needs to be adjusted to accommodate construction activities, the Contractor shall resubmit the LOD plan (including any additional erosion and sedimentation control measures needed) to the Resident for review and approval prior to any additional disturbance taking place:

- If the cumulative area of disturbance exceeds the estimated LOD noted above, for a total less than one acre, the Resident shall have a minimum of five (5) working days to approve the revised LOD plan.
- If the cumulative area of disturbance exceeds one acre, the Resident shall first approve of the plan and then submit a MPDES Construction General Permit NOI for MaineDEP approval. The approval will take a minimum of 14 working days.

Compliance with the erosion and sedimentation control requirements outlined in this Contract is required by the Contractor.

The Contractor shall comply with the conditions outlined in the Army Corps General Permit, Maine Department of Environmental Protection NRPA Permit by Rule, the US Army Corps of Engineers General Permit, and the Maine Pollutant Discharge Elimination System General Permit for stormwater discharge associated with construction activity. The Contractor shall indemnify and hold harmless the Maine Turnpike Authority or its agents, representatives and employees against any and all claims, liabilities or fines arising from or based on the violation of the above noted permits.

107.1 Contract Time and Contract Completion Date

This Subsection is amended by the addition of the following:

The Contract start date will be July 09, 2015 and all work shall be completed on or before October 20, 2017. The Project shall be substantially complete by July 28, 2017.

107.1.1 Substantial Completion

This Subsection is amended by the addition of the following:

Substantially complete shall be defined by the Authority as the following:

- All Contract work is complete.
- No lane closures are required to complete contract work.
- Toll systems infrastructure has been completed per required milestones and is acceptable to the Authority.
- Only "punch list" items remain.

Supplemental Liquidated damages on a calendar day basis in accordance with Subsection 107.7.2 shall be assessed for each calendar day that substantial completion is not achieved. Supplemental Liquidated damages for substantial completion will end when substantial completion is accepted by the Resident. If the work remains incomplete at the Contract Completion Date, liquidated damages on a calendar day basis in accordance with Subsection 107.7.2 shall be assessed for each calendar day that Contract completion is not achieved. If substantial completion is not completed by the Contract Completion date both supplemental liquated damages and liquated damages will be incurred.

107.3.2 Night Work

The Contractor shall be responsible to determine and adhere to the local regulations pertaining to night work time restrictions and noise limitations. The Contractor shall plan his work accordingly.

107.4.2 Schedule of Work Required

This Subsection is amended by the addition of the following:

The work shall be completed in logical timely increments. The Contractor shall submit a schedule for review that shows large segments of work scheduled for continuous blocks of time. Work in a segment shall be completed over a period of continuous work days. Work shall not be started in an area until the Contractor has scheduled the labor and equipment necessary to complete all work in the segment. The Contractor will not be permitted to "stretch" the Project over the entire Contract period, doing a day or two work per week.

A schedule that shows sporadic work activities through the duration of the Contract will not be approved. Actual work activities that are sporadic will not be allowed.

A two (2) week schedule shall be submitted by the Contractor weekly, the first week shall be detailed. The weekly detailed schedule shall show all lane closures that are anticipated for the following week. Lane closures that are not shown on this schedule will only be allowed if they are deemed emergency lane closures by the Resident.

The following Subsection is added:

107.4.6 Prosecution of Work

The following is a summary of the Construction Phases:

Phase 1A:

New Roadway Construction - Widening of departure side of westbound Lane 1 and 2 and Site Work

The Contractor shall construct a temporary MTA employee parking lot at the start of this phase per the Plans and Specifications. Once the employee parking lot is complete, the contractor shall construct the western portion of the widening of the westbound lanes including all associated roadway and site work as detailed in the Plans and Specifications. All work shall be completed in Phase 1A prior to starting phase 1B, except surface paving.

Phase 1B:

New Roadway Construction - Widening of approach side of WB Lane 1 and 2, Site Work, Tunnel Installation and Toll Lane Construction.

The Contractor shall construct the eastern portion of the widening of the westbound lanes including all associated roadway and site work. The Contract shall also start tunnel construction and construct the new westbound cash toll lanes as detailed in the Plans and Specifications. The contractor shall allow 10 business days within the schedule for the System Integrator to test, commission and open the new toll lanes. The Contractor shall not commence Phase 2 until the new westbound lanes are commissioned and open to traffic.

Phase 2:

The Contractor shall continue installing the tunnel through the plaza and reconstruct lane 3 toll equipment to be useable as an eastbound toll lane during Phase 3. The closing of lane 7 for ledge removal for the tunnel extension shall be restricted to a maximum of seven days and shall not occur between June 1st and August 31st. The Contractor shall complete all Phase 2 work as detailed in the Plans and Specifications.

Phase 3:

New Roadway Construction - Widening of approach and departure of eastbound Lane 7 and 8, Tunnel Installation and Toll Lane Reconstruction.

The Contractor shall construct the widening portions of the eastbound roadway per the plans and specifications. The Contract shall also complete tunnel construction and the construction of the south side tunnel entrance onto the island for lane 8. The Contractor shall reconstruct the eastbound cash toll lanes as detailed in the Plans and Specifications. The contractor shall allow 10 business days within the schedule for the System Integrator to test, commission and open the new lanes. The Contractor shall not commence Phase 4 until the new eastbound toll lanes are commissioned and open to traffic.

Phase 4: ORT Construction

ORT Construction – ORT slab and space frame installation, median barrier and paving the ORT land and surface paving the project limits.

All work shall be complete by the substantial completion date with the exception of the closure of median guardrail openings for looping ORT testing traffic after ORT testing is complete. The System Integrator shall commence commissioning testing after substantial completion and complete the testing no later than August 25, 2017.

Once the System Integrator completes commission testing, the Contractor shall schedule closing of the median guardrail openings and opening of the ORT lanes with the Authority.

It is the Contractor's responsibility to maintain long-term lane closures of the ORT zones and maintain all proposed ORT signage covers until the ORT lanes are open to traffic. At the Authority's discretion, opening may be accelerated if all required work is complete, but any such acceleration is still subject to the schedule terms in these Specifications.

107.4.7 Limitations of Operations

Once work commences on any entering wide load lanes it shall proceed expeditiously until completed. No work shutdown will be allowed.

The temporary parking area for Turnpike employees shall be constructed prior to closing the existing parking lot.

Wide loads will be allowed to safely pass through the Project area during daylight hours as authorized by the Authority unless otherwise approved. Wide loads are restricted from moving on the Turnpike from a half hour after sunset until a half hour before sunrise. The request to implement wide load restrictions must be made two weeks in advance.

All contract work west of 131+00 and east of Station 152+00 may not be started until Contract 2015.01 Falmouth Spru Paving contract is complete, which is anticipated by July 30, 2015 excluding Route 9 contract work. Care shall be taken to not damage the new surface pavement.

The Contractor will be allowed to mill the entire work area prior to beginning the paving operation in the work area provided the milled areas can be surfaced within two weeks. Temporary ramps shall be installed if the milling and paving operation do not occur in the same closure(s). Temporary bituminous ramps, incidental to paving operations, shall be a minimum 35 feet per two inches of pavement elevation change and will be required at all butt joints. The Contractor shall submit his milling and paving schedule for review and acceptance.

The Contractor shall limit the construction operations such that temporary pavement markings or pavement markers are applied prior to the roadway being open to traffic. Temporary pavement marking tape shall be used on all new surface pavement, no grinding of new surface pavement will be permitted.

No clearing operations, tree cutting or removal, shall take place in July or August.

The Contractor shall replace if necessary and secure all catch basin grates with Sikaflex 1a before being allowed to shift traffic onto the catch basins or if traffic has to potential to drive on the catch basin.

Care shall be taken when working near catch basins to ensure foreign material and contaminants do not enter the basin. If foreign material and/or contaminants enter the basin, it shall be removed prior to the material exiting the basin into a waterway. Removal shall be completed to the satisfaction of the Resident and payment shall be incidental to the Contract.

The Contractor shall submit his proposed staging and storage areas for approval by the Resident. All stored equipment must be outside of the clear zone. Proposed equipment storage locations shall be selected based on (1) proximity to UIS/Protected Natural Resources; (2) minimizing rutting or other actions that may hinder sheet flow from roadway; and (3) spill control and prevention, in the event of a fluid release from the equipment.

There shall be no H-pile or sheet pile driving during non-daylight hours. Pile driving will not be allowed within 10 feet of traffic.

The following Subsection is added:

107.4.9 Failure to Stop Work When Directed

In the event the Authority determines that the safety of the turnpike users (public) might be unduly compromised if work on the Project is not halted; the Resident Engineer, Resident Inspector or other authorized Authority representative will notify the Contractor to stop work. This may include directives to the Contractor to remove lane closures due to significant traffic delays. If the Contractor refuses to stop work within the time frame determined by the Authority, the Contractor will not be allowed to recommence work until after the Contractor meets with the Authority. In addition, work completed after the time allotted by the Authority to stop work will not be measured for payment.

107.7.2 Schedule of Liquidated Damages

The table of liquidated damages is deleted and replaced with the following:

Original Contract Amount From More Than	Original Contract Amount up to and Including	Amount of Liquidated Damages per Calendar
$0	$100,000	$225
$100,000	$300,000	$350
$300,000	$500,000	$475
$500,000	$1,000,000	$675
$1,000,000	$2,000,000	$900
$2,000,000	$4,000,000	$1,000
$4,000,000	and more	$2,100

108.4 Payment for Materials Obtained and Stored

This Subsection in the General Provisions is deleted and not replaced.

This Subsection of the Standard Specifications is deleted and replaced with the following:

Acting upon a request from the Contractor, accompanied by the required documentation, the Authority will pay for all or part of the value of acceptable, non-perishable Materials that are to be incorporated in the Work, including Materials that are to be incorporated into the Work not delivered on the Work site, and stored at places acceptable to the Authority (e.g. at a facility controlled by the Contractor or his Subcontractor\Fabricator). Examples of such Materials include steel piles, structural steel, prestressed concrete beams and slabs, stone masonry, curbing, timber and lumber, metal culverts, and other similar Materials. The Authority will not make payment on living or perishable Materials until acceptably planted in their final locations.

For structural steel fabrication, the Authority will not make partial payments for expenses such as shop drawing development, overhead, transportation, rent, storage, heat, Contractor mark-ups or other items until after fabrication has commenced. Payment will be based on the Authority's determination of percent complete at the close of the period.

As a condition of payment, the Contractor or their Subcontractor\Fabricator shall provide the following:

1. Proof that all Materials are stored in a secure location acceptable to the Authority.
2. Detailed invoices from the material supplier including a summary of the Materials provided, quantities shipped and received, unit costs, taxes, transportation fees, and all other charges included in the invoice total.
3. Copies of mill certifications, or other material certifications, as required by the Specifications relevant to the Materials.
4. Right of access for the Authority, or its duly authorized agent, to inspect and quantify the Materials at the approved storage site.
5. Proof of insurance for the stored Materials. The Contractor or his Subcontractor\Fabricator shall carry insurance, equal to 100% of the replacement value of the Materials, for all stored Materials. The Maine Turnpike Authority shall be named as an Additional Insured on the insurance policy.

If payment for Materials obtained and stored by the Contractor's Subcontractor\Fabricator is made to the Contractor, then the Contractor must provide proof of payment from his Subcontractor\Fabricator within 14 calendar days of the date the Contractor receives payment for the Materials. Failure by the Contractor to provide timely proof of payment for these Materials will result in the paid amount being withheld from the subsequent progress payment, or payments, until such time proof of payment is received by the Authority.

Materials paid for by the Authority will become the property of the Authority, but the risk of loss shall remain with the Contractor. Payment for Materials does not constitute acceptance of the Material. If Materials for which the Authority has paid are later found to be unacceptable, then the Authority may withhold amounts reflecting such unacceptable Materials from payments otherwise due the Contractor.

In the event of Default, the Authority may use, or cause to be used, all paid-for-Materials in any manner that is in the best interest of the Authority.

108.4.1 Price Adjustment for Hot Mix Asphalt

This Subsection in the General Provisions is deleted and replaced with the following:

For Contracts containing an excess of 500 tons of bituminous pavement, an asphalt price adjustment will be made for all bituminous concrete placed after the bid date of the Contract. No asphalt price adjustment will be allowed for Contracts containing less than 500 tons.

Price adjustments will be based on the variance in cost for the performance-graded binder component of the hot mix asphalt. The quantity of hot mix asphalt for each pay item will be multiplied by performance graded binder given in the table below, times the difference in price between the base price and the period price of asphalt cement. Adjustments will be made upward or downward, as prices increase or decrease. The quantity of Hot Mix Asphalt will be determined from the quantity shown on the progress estimate for each pay period. The base price of performance graded binder to be used is the price per standard ton current with the bid opening date. The period price of performance grade binder shall be determined by the Authority by using the average New England Selling Price and shall be the price per standard ton current with the ending date of the progress estimate. The Authority will determine the price adjustment weekly as prices increase or decrease and the sum of the weekly totals will be included in the monthly payment. No price adjustment will be made after the substantial completion date. The last price listed before the substantial completion will be used for pavement placed after the substantial completion date. The prices shall be determined by using the average New England Selling Price, as listed in the Asphalt Weekly Monitor.

Item 403.207	Hot Mix Asphalt - 19 mm	5.2%
Item 403.2083	Hot Mix Asphalt - 12.5 mm	5.6%
Item 403.209	Hot Mix Asphalt - 9.5 mm (sidewalks, drives, & incidentals)	6.2%
Item 403.211	Hot Mix Asphalt - Shim	6.2%
Item 403.213	Hot Mix Asphalt - 12.5 mm (base and intermediate course)	5.6%

109.7.3 Compensable Items

The following is added to Item 3.:

3. "A maximum 15% markup will be allowed on the total..."

The following is added to the end of the paragraph:

4. ..."if determined by the Authority to be lower."

SPECIAL PROVISION

SECTION 201

CLEARING RIGHT-OF-WAY

(Clearing)

201.03 General

The following paragraphs are added:

Clearing was completed within the project area in early 2015. These clearing limit lines are shown as exiting on the Contract Plans. This clearing line is both within final slope limit lines and beyond final slope limit lines. A proposed clearing limit is also shown on the Plans.

The Contractor is advised, that pursuant to Maine State law, the sale of harvested forest products must be reported to the Maine Forest Service at the end of each year. The Contractor is designated as the Authority's agent for reporting such harvesting. The Contractor shall prepare and submit the appropriate forms to the Maine Forest Service.

There shall be no clearing operations (tree cutting and removal) in July or August.

201.04 Clearing

The following is added at the end of the second paragraph:

Stumps that remain in areas not grubbed shall be cut flush with the ground, this shall extend to the previous clearing limit line. The stumps shall be treated with a herbicide, covered with two inch loam and seeded.

Vegetation within the clearing limit that has a height greater than the distance measured from the edge of existing pavement to the base of the tree shall be cleared by a means that assures that the tree will not fall onto the pavement. The Contractor shall submit his method of clearing to the Resident for approval.

The Contractor shall flag the clearing limits at 50 foot intervals two feet beyond the clearing limit line such that the flags remain in place at the completion of the clearing operation. This work shall be completed a minimum of one (1) week prior to the clearing. The flags shall be removed by the Contractor prior to the completion of the Contract. This work will be incidental to Clearing.

201.07 Disposal

The second paragraph is deleted and replaced with the following:

All clearing materials must be disposed of off-site by an approved method. Materials chipped on-site must be transported off-site for disposal. The Contractor will not be permitted to bury any brush or logs in the embankment slopes or within the turnpike right-of-way.

The loading of chips and logs for transport off the Project site shall not be conducted on the existing pavement. This activity shall be located at least 20 feet from the edge of pavement. The Resident may increase the required offset distance if it is determined that chips are spraying onto the pavement.

201.10 Basis of Payment

The following paragraph is added:

Loam and seed will be measured for payment under their respective pay items.

SPECIAL PROVISION

SECTION 202

REMOVING STRUCTURES AND OBSTRUCTIONS

(Removing Asbestos Containing Materials)

202.01 Description

The following paragraphs are added:

The work shall also consist of removing and disposing of lighting electrical conduit, foundations and pull boxes containing asbestos.

All asbestos containing materials shall be removed by a licensed asbestos abatement contractor prior to the excavation of the conduit. All asbestos containing materials shall be disposed of at licensed asbestos containing material disposal sites in compliance with current EPA and Maine DEP regulations. The Contractor shall submit to the Resident the original disposal receipts acknowledging proper disposal of asbestos containing materials prior to the payment of Removing Asbestos Containing Material pay items.

All non-asbestos containing materials shall become the property of the Contractor and shall be removed from the site prior to the completion of the Project. The Contractor shall provide the Resident with an affidavit stating the final location of all disposed material and that the material was disposed of in accordance with the Maine Department of Environmental Protection Solid Waste Regulations.

The following Subsection is added:

202.021 Removing Asbestos Containing Materials

It is anticipated that all existing Exit 52 conduit contains asbestos materials. Where practical the existing conduit and wires will be abandoned in place and new conduits and wires will be installed at a minimum 3’-0” lateral offset. Where interferences occur between the existing and new conduits, or where new foundations and pull boxes are being installed in the same location(s) as the existing foundations and pull boxes, the asbestos will need to be abated prior to the existing conduits/ foundations/ pull boxes be removed and the new conduits/ foundations/ pull boxes being installed. If metal conduits into the existing foundations can be cut and the foundation can be removed without disturbing the asbestos materials, asbestos abatement at that location will not be required.

A licensed asbestos abatement contractor shall properly abate and dispose of all asbestos containing materials which require removal.

No asbestos containing materials may be removed without a Maine Turnpike Authority approved removal and disposal plan; and proper notifications and filings with the Maine Department of Environmental Protection.

The licensed asbestos abatement contractor shall restrict access around the trench perimeters by installing barrier tape at minimum 10 feet offsets to the excavation.

The General Contractor may sub-contract the removal of the asbestos containing material (ACM) to a licensed asbestos abatement contractor or use his own trained and licensed personnel. The licensed asbestos abatement contractor must prepare a work plan for the removal of the ACM and submit a copy to the Resident for approval prior to commencing with the removal of ACM.

Disposal of all ACM shall comply with current EPA and Maine DEP regulations. The Contractor shall submit to the Resident the original disposal receipts acknowledging proper disposal of ACM prior to the payment of Removing Asbestos Containing Material pay items.

The licensed asbestos abatement contractor will be responsible for all work associated with the asbestos removal, including the Asbestos Removal Plan, Maine DEP Notification, demolition, final clearances, legal disposal, and Abatement Certification.

The licensed asbestos abatement contractor shall obtain any and all permits or licenses necessary for the performance of the work and shall familiarize themselves with, and conform to, all local, State and Federal laws, regulations or ordinances applicable to the work.

202.05 Method of Measurement

The first and third sentences of the first paragraph are deleted and replaced with the following:

Removing Asbestos Containing Materials will be measured as one lump sum.

202.06 Basis of Payment

This Subsection is amended by the addition of the following:

Removing Asbestos Containing Materials will be paid for at the Contract lump sum price which price shall be full compensation for the legal removal and disposal of all asbestos containing materials, and shall include all materials, labor, tools and equipment necessary to complete this work.

Payment will be made under:

Pay Item		Pay Unit
202.071	Removing Asbestos Containing Materials, Electrical Conduit	Lump Sum

SPECIAL PROVISION

SECTION 202

REMOVING STRUCTURES AND OBSTRUCTIONS

(Removing Existing Manholes or Catch Basins)

202.05 Removing Manholes or Catch Basins

The following sentence is added:

Frames and grates shall be removed, transported and stacked at the Crosby Maintenance Area located at Mile 45.8 Southbound.

202.07 Method of Measurement

The last paragraph is deleted and replaced with the following:

Removing Manholes or Catch Basins will be measured by each unit satisfactorily removed.

202.08 Basis of Payment

The following is added after the first sentence of the fourth paragraph:

Removing, transporting and stacking the frames and grates will not be paid for separately, but shall be incidental to the Removing Existing Manholes or Catch Basin item.

SPECIAL PROVISION

SECTION 202

REMOVING STRUCTURES AND OBSTRUCTIONS

(Removing Existing Structural Concrete)

202.01 Description

The following paragraphs are added:

This work shall include removal and disposal of the existing pavement and toll island slabs including bumpers and booth enclosures as shown on the Plans.

All removed concrete materials shall become the property of the Contractor and shall be removed from the site at the completion of the Project. The Contractor shall provide the Resident with an affidavit stating the final location of all disposed material and that the material was disposed of in accordance with the Maine Department of Environmental Protection Solid Waste Regulations.

SPECIAL PROVISION

SECTION 202

REMOVING STRUCTURES AND OBSTRUCTIONS

(Removing Pavement Surface)

202.01 Description

The following sentence is added:

This work shall also consist of removing the surface of the bituminous concrete pavement to the depth, width, grade, and cross section as shown on the Plans or as approved by the Resident.

The following Subsection is added:

202.061 Removing Pavement

The equipment for removing the bituminous surface shall be a power-operated milling machine or planer capable of removing the bituminous concrete pavement to the required depth. The milling machine shall be capable of accurately establishing profile grades by referencing from a floating straight edge, a minimum of 50 feet. The equipment shall also have an effective means for removing excess material from the surface and for preventing accidents from flying material in compliance with Subsection 105.2.45, Compliance with Health and Safety Laws.

All pavement grindings shall be disposed of by the Contractor off of the turnpike right-of-way in accordance with the Maine Department of Environmental Protection Solid Waste Management Requirements.

SPECIAL PROVISION

SECTION 202

REMOVING STRUCTURES AND OBSTRUCTIONS

(Removing Rumble Strips)

202.01 Description

The following paragraph is added:

This work shall consist of grinding existing rumble strip locations to a depth of 1-1/2 inches, coating vertical and horizontal surfaces with bituminous tack coat, and installing 1-1/2 inches of hot mix asphalt, 9.5 mm over the entire milled area. Locations and lengths of removal shall be as shown on the Plans or as approved by the Resident.

The following Subsections are added:

202.011 Materials

Grinding shall be done in accordance with Section 202. Bituminous tack coat shall conform to Section 409.

Hot mix asphalt, 9.5 mm shall conform to Section 401.

202.025 General

Existing rumble strips are approximately 16 inches long, seven inches wide, 1/2 inch deep, and spaced approximately every five inches.

202.07 Method of Measurement

The following paragraph is added:

Removing Rumble Strips shall be measured by the linear foot removed and accepted. Measurement shall be parallel to the baseline.

202.08 Basis of Payment

The following sentences are added:

Removing Rumble Strips shall be paid for at the Contract unit price per linear foot which includes all grinding, bituminous tack coat, pavement, equipment and labor necessary to satisfactorily complete the work.

Payment will be made under:

Pay Item		Pay Unit
202.206	Removing Rumble Strips	Linear Foot

SPECIAL PROVISION

SECTION 203

EXCAVATION AND EMBANKMENT

(Rock Excavation)

203.04 General

The following paragraphs are added:

The quantity of rock excavation is approximate and based on a subsurface exploration program. The exploration locations are illustrated on the Plans. The actual limits of ledge shall be determined by probing without the removal of the overburden or by cross section after the removal of the overburden. The Contractor shall propose a method of verifying the quantities to the Resident for approval.

203.19 Basis of Payment

The following paragraphs are added:

The Contractor shall not be compensated for any additional costs associated with verifying quantities by the method approved by the Resident. The Contractor shall be compensated for the actual quantity of ledge excavated at the unit price submitted. No unit price adjustment will be considered if the actual rock excavation quantity differs from the estimated quantity.

SPECIAL PROVISION

SECTION 203

EXCAVATION AND EMBANKMENT

This Section is amended as follows:

All references to "waste storage areas" shall be deleted.

203.01 Description

The following paragraph is added:

This work shall consist of cutting, removing and disposing of the full depth of existing bituminous concrete pavement within the limits of full depth pavement excavation as shown on the Plans or as approved by the Resident. The pavement shall be sawcut to the full depth of pavement at the limits of the excavation to provide a clean, vertical cut surface.

203.04 General

The third paragraph is deleted and replaced with the following:

There are no approved waste storage areas or waste areas within the Project limits. Unsuitable materials shall be disposed of off-site in accordance with Subsection 203.06.

Any temporary earth support required to install or remove drainage structures and utilities and support existing or proposed utilities will not be measured separately for payment, but shall be incidental to the Excavation items.

All excavations shall be accomplished in accordance with the applicable OSHA Standards. The Resident reserves the right to request the Contractor to prepare an excavation plan. This plan shall include, but not necessarily be limited to, the limit and depth of excavation, side slope, shoring, trench box and utility support.

203.10 Embankment Construction - General

The thirteenth and fourteenth paragraphs are deleted and replaced with the following:

All portions of the embankment shall be compacted in accordance with the designated embankment compaction requirements specified for the Project.

The existing slopes should be benched as shown on the drawings prior to placing additional fill. Embankment fill should be placed in lifts which extend laterally beyond the limits of the design side slopes such that the specified degree of compaction is achieved within the limits of the completed embankment. The slopes should then be trimmed back to design dimensions.

203.11 Construction of Earth Embankment - Layer Method

The second, third, and fourth paragraphs are deleted and replaced with the following:

Layers shall be placed in lifts not to exceed 12 inches after compaction. Common borrow shall be compacted using vibratory compaction equipment to 92 percent of the material's maximum dry density as determined by ASTM D-1557. The compacted material shall appear firm and stable. Strict moisture control shall be utilized by the Contractor when using a cohesive fill material and the moisture content of the compacted material should not exceed four percent above the material's optimum moisture content.

The first sentence of the fourth paragraph is amended as follows:

Satisfactory compaction of granular borrow is defined as not less than 95 percent of the maximum density.

203.12 Construction of Earth Embankment with Moisture and Density Control

The last sentence of the second paragraph is amended as follows:

Each granular borrow layer placed with controlled moisture shall be compacted to not less than 95 percent of the maximum density.

The following paragraph is added:

Common borrow shall be placed in lifts not to exceed 12 inches after compaction. Common borrow shall be compacted using vibratory compaction equipment to 92 percent of the material's maximum dry density as determined by ASTM D-1557. The compacted material shall appear firm and stable. Strict moisture control shall be utilized by the Contractor when using a cohesive fill material and the moisture content of the compacted material should not exceed four percent above the material's optimum moisture content.

203.16 Winter Construction of Embankments

The word "core" is deleted from the first and second sentences in the first paragraph.

203.18 Method of Measurement

Any reference to borrow will be deleted from the first paragraph.

The pay quantity of common borrow and granular borrow shall be 115 percent of the compacted quantity measured in place.

The following sentence is added:

There will be no additional payment for the required excavation plan, and costs shall be incidental to the Excavation items.

SPECIAL PROVISION

SECTION 203

EXCAVATION AND EMBANKMENT

(Presplitting Rock/Cushion Blasting)
(Drilling and Blasting of Solid Rock Subgrade)

203.01 Description

The following paragraph is added:

This work shall also consist of providing special perimeter control blasting where existing utilities need to be protected, or where property lines need to be protected, and/or where the rock slope height shown on plans is 10 feet or more. Special perimeter control blasting shall involve either presplitting rock, cushion blasting, or both. This provision is in addition to the requirements of rock excavation and all requirements of the Standard Specifications, General Provisions, and Special Provisions for rock excavation and blasting shall be followed.

203.04 General

The following paragraphs are added:

Special perimeter control blasting procedures shall be required where ledge is soft or fractured, and over-breakage of rock will damage existing utilities and structures or where property lines need to be maintained. Special perimeter control blasting procedures will not be required to maintain pay limits or create aesthetically pleasing rock cuts for proposed rock cuts less than 10 feet high.

The Contractor shall presplit or cushion blast the rock along proposed rock cuts over eight (8) feet high. The Contractor shall drill parallel slope holes to the full depth of the rock lift along the line and plane of inclination of the proposed slope using a two foot maximum center-to-center spacing and a three inch maximum hole diameter. The Contractor shall modify the spacing and loading of the presplitting holes and cushion blast holes, if necessary, according to the characteristics and structure of the rock formations encountered to obtain the required slope without fracture of the rock beyond the presplit face. The contractor shall not modify the presplit hole spacing or diameter without notification of and approval from the Resident.

The Contractor shall notify the Resident where he feels the special perimeter control blasting procedures are required, including on slopes less than 10 feet high, and the Resident shall concur they are necessary before the Contractor will be paid for the special perimeter control blasting procedures.

The following Subsection is added:

203.043 Excavation

At any location, all blasting shall be completed and the slopes of all rock cuts shall be thoroughly cleaned and scaled of all loose fragments, to the satisfaction of the Resident. Where excavation is progressed in stages (lifts), the backslope for each stage (lift) shall be cleaned and scaled prior to the succeeding stage (lift). Where a stage (lift) height exceeds the reach of excavation equipment used for rock removal, the scaling operation shall be completed to the satisfaction of the Resident while such equipment rests upon a partial height lift of blast rock.

The solid rock subgrade shall be shattered to a depth of at least one (1) foot below subgrade elevation in areas where blasting is needed to remove bedrock.

The following Subsection is added:

203.044 Protection

The Contractor shall conduct all rock excavation operations, including blasting, in accordance with all State and local laws and ordinances. Precautions shall be exercised, including the use of mats, and other cover necessary to avoid damage to property and utilities adjacent to the work. The cost for the use of the mats, whether ordered by the Resident or used at the Contractor's discretion, and all other precautionary measures shall be included in the price bid for the excavation item. Refer to Subsection 105.2.6, Use of Explosives, for additional information.

Traffic shall be stopped as required under Subsection 105.2.6.

203.17 Preparation and Protection of Subgrade

The following sentences are added:

Drilling and Blasting of Solid Rock Subgrade. Subgrade areas shall be shattered to the dimensions shown or described on the Plans or directed by the Resident.

In areas where blasting is needed to remove bedrock, the rock subgrade shall be shatter blasted to a depth of one (1) foot below subgrade elevation and extended sufficiently beyond the beginning and end of cut areas to eliminate water pockets.

After detonation, any rock that protrudes above the subgrade elevation shall be removed. When directed by the Resident, the Contractor shall excavate a trench across the blasted rock to determine if the rock is broken and rearranged to a depth of one (1) foot below subgrade. Afterwards, the trench shall be backfilled with the rock removed.

203.18 Method of Measurement

The following sentences are added:

Presplitting and cushion blasting will be measured by the linear foot of presplitting holes drilled or cushion blast holes drilled, loaded and detonated, measured from the surface of the rock to the designated depth of cut.

The quantity of Drilling and Blasting of Solid Rock Subgrade to be measured for payment will be the number of square yards of subgrade plan area drilled and detonated in accordance with this Section, measured at subgrade level.

The number of cubic yards of excavation required by the Resident to inspect the depth of shattered and rearranged rock, computed at a maximum width of 30 inches, will be measured for payment under 206.07 Structural Rock Excavation – Drainage and Minor Structures.

When Structural Rock Excavation – Drainage and Minor Structures, and Drilling and Blasting of Solid Rock Subgrade occur at the same location, measurement and payment for Structural Rock Excavation - Drainage and Minor Structures will be made for the required trench. This area will not be included in the measurement and payment for Drilling and Blasting of Solid Rock Subgrade.

203.19 Basis of Payment

The following paragraphs are added:

The accepted quantity of Presplitting Rock will be paid for at the Contract unit price per linear foot of presplitting or cushion blast holes drilled and accepted. Payment shall be full compensation for drilling holes, furnishing, placing and detonating explosives, and for all incidentals required to complete the work. There will be no payment for rock removed from beyond the limit of finished slopes or limit of work.

The accepted quantity of Drilling and Blasting of Solid Rock Subgrade will be paid for at the Contract unit price per square yard accepted. Payment will be full compensation for performing the work specified including any necessary stripping and removal of blasted subgrade rock that may swell above subgrade, and its disposition on the project as directed by the Resident.

Excavation and backfill required to inspect the depth of broken rock below subgrade will be paid for at the Contract unit price per cubic yard for Structural Rock Excavation – Drainage and Minor Structures

Payment will be made under:

Pay Item		Pay Unit
203.211	Presplitting Rock/Cushion Blasting	Linear Foot
203.212	Drilling and Blasting of Solid Rock Subgrade	Square Yard

SPECIAL PROVISIONS

SECTION 203

EXCAVATION AND EMBANKMENT

(Common Borrow, Truck Measure)

203.01 Description

The following sentence is added:

This work shall also consist of furnishing, grading and compacting common borrow used for slope widening in areas of new guardrail or as approved by the Resident.

203.04 General

The following paragraph is added:

Existing excavation shall be used as fill material. Unsuitable material shall be disposed of as directed and no material shall be wasted without permission. Common borrow will only be paid for when it is brought on-site from an outside source.

203.18 Method of Measurement

The following paragraph is added:

Common Borrow will be measured for payment by the cubic yard, truck measure, at 85 percent of measured volume. The measurement will be in vehicles at the point of delivery as shown on delivery slips.

203.19 Basis of Payment

The following paragraph is added:

The accepted quantity of Common Borrow, Truck Measure will be paid for at the Contract unit price per cubic yard.

Payment will be made under:

Pay Item		Pay Unit
203.241	Common Borrow, Truck Measure	Cubic Yard

SPECIAL PROVISIONS

SECTION 205

SHOULDER RECONSTRUCTION

(Widening of Existing Shoulder)

205.01 Description

The following paragraph is added:

This work shall consist of widening existing outside shoulders in areas of proposed single rail guardrail, or as approved by the Resident. The widening shall be done by excavating, furnishing, placing, grading and compacting aggregate subbase course gravel, granular borrow, common borrow and asphalt grindings in accordance with the thickness and typical sections shown on the Plans.

The following Subsections are added:

205.021 Granular Borrow

Granular borrow shall be material meeting the requirements of Subsection 703.19.

205.022 Fill Material

Fill material shall be existing excavation or common borrow from an outside source.

205.023 Asphalt Grindings

The grindings shall be reprocessed (crushed) to meet the following gradation:

Sieve Designation	Grading
3/4”	100
1/2”	95-100
No.4	50-80
No.50	18-28
No. 200	3-10

205.024 Aggregate Subbase Course-Gravel

Aggregate subbase course-gravel shall be material meeting the requirements of Subsection 703.06.

205.0511 Compaction - Asphalt Grindings

The asphalt grindings shall be placed and compacted to a minimum thickness of three inches unless otherwise designated by the Resident.

205.06 Method of Measurement

The following sentence is added:

The quantity of widening of existing shoulder will be measured for payment per linear foot at locations noted on the Plans.

205.11 Basis of Payment

The following paragraph is added:

The accepted quantity of Widening Existing Shoulder will be paid for at the Contract unit price per linear foot which shall include the asphalt grindings, excavation, aggregate subbase course gravel and granular borrow. Common Borrow will be measured in accordance with Section 203 of these Specifications.

Payment will be made under:

Pay Item		Pay Unit
205.51	Widening of Existing Shoulder	Linear Feet

SPECIAL PROVISION

SECTION 206

STRUCTURAL EXCAVATION

This Section is amended as follows:

All references to “waste storage areas” shall be deleted.

206.01 Description

The following is added after the first paragraph:

This work also shall consist of excavating and removal of earth materials at the ORT slabs, grade beams and departure slabs within the limits of work as shown on the Plans or as approved by the Resident.

206.02 Construction Methods

The following paragraphs are added:

There are no approved waste storage areas or waste areas within the Project limits. Unsuitable materials shall be disposed of off-site in accordance with Subsection 203.06.

The bituminous pavement shall be disposed of by the Contractor off the Turnpike Right-of-Way. All bituminous pavement shall be disposed of in accordance with Chapter 404 of the Maine Department of Environmental Protection Solid Waste Management Regulations.

206.04 Method of Measurement

The following paragraph is added:

Excavation required to expose repair areas will be paid for under Item 206.08, Structural Earth Excavation - Major Structures. Backfill of the repair areas, not requiring gravel or hot bituminous pavement, will not be measured separately for payment, but shall be incidental to the Structural Earth Excavation item.

206.05 Basis of Payment

The following is added after the first paragraph:

The work shall also include all materials, equipment and labor associated with excavating, backfilling and compacting areas of structural excavation.

Payment will be made under:

Pay Item		Pay Unit
206.08	Structural Earth Excavation – Major Structures	Cubic Yard

SPECIAL PROVISION

SECTION 401

HOT MIX ASPHALT PAVEMENT

The following Specification is based on the MaineDOT February 11, 2009 Specification for Division 400, Pavements.

Section 401, Hot Mix Asphalt is deleted in its entirety and replaced with the following:

401.01 Description

The Contractor shall furnish and place one or more courses of Hot Mix Asphalt Pavement (HMA) on an approved base in accordance with the Contract documents and in reasonably close conformity with the lines, grades, thickness, and typical cross sections as shown on the Plans or established by the Resident. The Authority will accept this work under Quality Assurance provisions, in accordance with these Specifications and the requirements of Section 106, Quality, the provisions of AASHTO M 323, except where otherwise noted in Sections 401 and 703 of these Specifications, and the MaineDOT Policies and Procedures for HMA Sampling and Testing.

401.02 Materials

Materials shall meet the requirements specified in Section 700, Materials:

- Asphalt Cement 702.01
- Aggregates for HMA Pavement 703.07
- HMA Mixture Composition 703.09

401.021 Recycled Asphalt Materials

Recycled Asphalt Pavement (RAP) may be introduced into the mixture at percentages approved by the Authority according to the MaineDOT Policies and Procedures for HMA Sampling and Testing. If approved by the Authority, the Contractor shall provide documentation stating the source, average test results for average residual asphalt content, and stockpile gradations showing RAP materials have been sized to meet the maximum aggregate size requirements of each mix designation. The Authority will obtain samples for verification and approval prior to its use.

In the event that RAP source or properties change, the Contractor shall notify the Authority of the change and submit new documentation stating the new source or properties a minimum of 72-hours prior to the change to allow for obtaining new samples and approval.

The RAP for surface pavement shall be processed to meet the requirements of Class I RAP. The shim pavement RAP may be from any source meeting the requirements of Class II RAP.

401.03 Composition of Mixtures

The Contractor shall compose the Hot Mix Asphalt Pavement with aggregate, Performance Graded Asphalt Binder (PGAB), and mineral filler if required. HMA shall be designed and tested according to AASHTO R35 and the volumetric criteria in Table 1. The Contractor shall size, uniformly grade, and combine the aggregate fractions in proportions that provide a mixture meeting the grading requirements of the Job Mix Formula (JMF). The Contractor may use a maximum of 15 percent reclaimed asphalt pavement (RAP) in any base, binder, surface, or shim course, unless otherwise noted.

The MaineDOT (Department), or an independent consultant approved by the Authority, will be providing the mix design verification (Job Mix Formula) for the Authority's approval. The Job Mix Formula (JMF) will be sent to the Department Central Laboratory in Bangor, Maine. The samples will be obtained by the Department for laboratory testing. Before the start of paving, the Contractor and the Department will split a sample for verification of design before production will be allowed. The Contractor shall submit for Authority approval a JMF for each mixture to be supplied. The Authority may approve one (1) active design per nominal maximum size, per traffic level, per plant, plus a 9.5 mm "fine" mix @ 50 gyrations for shimming, and where required, a non-RAP design for bridge decks. The Authority shall then have 15 calendar days in which to process a new design before approval. The JMF shall establish a single percentage of aggregate passing each sieve size within the limits shown in Subsection 703.09. The mixture shall be designed and produced, including all production tolerances, to comply with the allowable control points for the particular type of mixture as outlined in Subsection 703.09. The JMF shall state the original source, gradation, and percentage to be used of each portion of the aggregate and mineral filler if required. It shall also state the proposed PGAB content, the name and location of the refiner, the supplier, the source of PGAB submitted for approval, the type of PGAB modification if applicable, and the location of the terminal if applicable.

In addition, the Contractor shall provide the following information with the proposed JMF:

- Properly completed JMF indicating all mix properties (Gmm, VMA, VFB, etc.).
- Stockpile Gradation Summary.
- Design Aggregate Structure Consensus Property Summary.
- Design Aggregate Structure Trial Blend Gradation Plots (0.45 power chart).
- Trial Blend Test Results for at least three different asphalt contents.
- Design Aggregate Structural for at least three trial blends.
- Test results for the selected aggregate blend at a minimum of three binder contents.
- Specific Gravity and temperature/viscosity charts for the PGAB to be used.
- Recommended mixing and compaction temperatures from the PGAB supplier.
- Material Safety Data Sheets (MSDS) For PGAB.
- Asphalt Content vs. Air Voids trial blend curve.
- Test report for Contractor's Verification sample.
- Summary of RAP test results (if used), including count, average and standard deviation of binder content and gradation.

At the time of JMF submittal, the Contractor shall identify and make available the stockpiles of all proposed aggregates at the plant site. There must be a minimum of 150 ton for

stone stockpiles, 75 ton for sand stockpiles, and 50 ton of blend sand before the Authority will sample. The Authority shall obtain samples for laboratory testing. The Contractor shall also make available to the Authority the PGAB proposed for use in the mix in sufficient quantity to test the properties of the asphalt and to produce samples for testing of the mixture. Before the start of paving, the Contractor and the Authority shall split a production sample for evaluation. The Contractor shall test its split of the sample and determine if the results meet the requirements of the Department's written policy for mix design verification (See Maine DOT Policies and Procedures for HMA Sampling and Testing available at the Central Laboratory in Bangor). If the results are found to be acceptable, the Contractor will forward their results to the Authority's Lab, which will test the Authority's split of the sample. The results of the two split samples will be compared and shared between the Authority and the Contractor. If the Department finds the mixture acceptable, an approved JMF will be forwarded to the Authority. The Authority will then notify the Contractor that paving may commence. The first day's production shall be monitored, and the approval may be withdrawn if the mixture exhibits undesirable characteristics such as checking, shoving or displacement. The Contractor shall be allowed to submit aim changes within 24 hours of receipt of the first Acceptance test result for an individual JMF. Adjustments will be allowed of up to 2% on the percent passing the 2.36 mm sieve through the 0.075 mm and 3% on the percent passing the 4.75 mm or larger sieves. Adjustments will be allowed on the %PGAB of up to 0.2 percent. Adjustments will be allowed on GMM of up to 0.010.

The Contractor shall submit a new JMF for approval each time a change in material source or materials properties is proposed. The same approval process shall be followed. The cold feed percentage of any aggregate may be adjusted up to 10 percentage points from the amount listed on the JMF, however no aggregate listed on the JMF shall be eliminated. The cold feed percentage for RAP may be reduced up to five percentage points from the amount listed on the JMF and shall not exceed the percentage of RAP approved in the JMF or for the specific application.

TABLE 1
VOLUMETRIC DESIGN CRITERIA

<table>
<tr><th rowspan="2">Design ESAL's (Millions)</th><th colspan="3" rowspan="2">Required Density (Percent of G_{mm})</th><th colspan="5">Voids in the Mineral Aggregate (VMA)(Minimum Percent)</th><th rowspan="2">Voids Filled with Binder (VFB) (Minimum %)</th><th rowspan="2">Fines/Eff. Binder Ratio</th></tr>
<tr><th colspan="5">Nominal Maximum Aggregate Size (mm)</th></tr>
<tr><th>$N_{initial}$</th><th>N_{design}</th><th>N_{max}</th><th>25</th><th>19</th><th>12.5</th><th>9.5</th><th>4.75</th></tr>
<tr><td><0.3</td><td>≤91.5</td><td rowspan="6">96.0</td><td rowspan="6">≤98.0</td><td rowspan="6">13.0</td><td rowspan="6">14.0</td><td rowspan="6">15.0</td><td rowspan="6">16.0</td><td rowspan="6">16.0</td><td>70-80</td><td rowspan="6">0.6-1.2</td></tr>
<tr><td>0.3 to <3</td><td>≤90.5</td><td>65-80</td></tr>
<tr><td>3 to <10</td><td rowspan="3">≤89.0</td><td rowspan="3">65-80*</td></tr>
<tr><td>10 to <30</td></tr>
<tr><td>≥ 30</td></tr>
</table>

** For 9.5 mm nominal maximum aggregate size mixtures, the maximum VFB is 82.*

** For 4.75 mm nominal maximum aggregate size mixtures, the maximum VFB is 84.*

**For 4.75mm nominal maximum aggregate size mixtures, the Fines/Effective Binder Ratio is 0.6-1.4*

401.031 Warm Mix Technology

The Contractor may place Hot Mix Asphalt Pavement produced with an accepted WMA technology if approved by the Authority. Methods or technologies shall generally be at the Contractors' option, but will be limited to proven, Agency and Industry accepted practice. Mixture production, placement and volumetric testing details, including temperatures, shall be included in the project specific QCP, submitted to the Authority for approval prior to any work.

401.04 Temperature Requirements

After the JMF is established, the temperatures of the mixture shall conform to the following tolerances:

- In the truck at the mixing plant – allowable range 275° to 325°F.
- At the paver – allowable range 275° to 325°F.
- Or the recommendations, approved by the Authority, from the Asphalt Binder supplier.

The JMF and the mix subsequently produced shall meet the requirements of Table 1 and Subsection 703.07.

401.05 Performance Graded Asphalt Binder

Unless otherwise noted in Special Provision Section 403, Hot Bituminous Pavement, PGAB shall be 64-28. The PGAB shall meet the applicable requirements of AASHTO M320 - Standard Specification for PGAB. The Contractor shall request approval from the Authority for a change in PGAB supplier or source by submitting documentation stating the new supplier or source a minimum of 24-hours prior to the change. In the event that the PGAB supplier or source is changed, the Contractor shall make efforts to minimize the occurrence of PGAB co-mingling.

401.06 Weather and Seasonal Limitations

The Contractor may place Hot Mix Asphalt Pavement for use other than a traveled way wearing course, provided that the air temperature as determined by an approved thermometer (placed in the shade at the paving location) is 40°F or higher and the area to be paved is not frozen. The Contractor may place Hot Mix Asphalt Pavement as traveled way wearing course, provided the air temperature determined as above is 45°F or higher. For the purposes of this Section, the traveled way includes truck lanes, ramps, approach roads and auxiliary lanes. The atmospheric temperature for all courses on bridge decks shall be 50°F or higher.

Hot Mix Asphalt Pavement used for curb, driveways, sidewalks, islands, or other incidentals is not subject to seasonal limitations, except that conditions shall be satisfactory for proper handling and finishing of the mixture. All mixtures used for curb, driveways, sidewalks, islands, or other incidentals shall conform to Subsection 401.04, Temperature Requirements. Unless otherwise specified, the Contractor shall not place Hot Mix Asphalt Pavement on a wet or frozen surface and the air temperature shall be 40°F or higher.

On all sections of overlay with wearing courses one inch thick or less, the wearing course for the travelway and adjacent shoulders shall be placed provided the air temperature is determined as above 50°F or higher.

401.07 Hot Mix Asphalt Plant

401.071 General Requirements

HMA plants shall conform to AASHTO M156.

a. Truck Scales - When the hot mix asphalt is to be weighed on scales meeting the requirements of Section 108, Payment, the scales shall be inspected and sealed by the State Sealer as often as the Authority deems necessary to verify their accuracy.

Plant scales shall be checked prior to the start of the paving season, and each time a plant is moved to a new location. Subsequent checks will be made as determined by the Resident. The Contractor will have at least ten 50 pound masses for scale testing.

401.072 Automation of Batching

Batch plants shall be automated for weighing, recycling, and monitoring the system. In the case of a malfunction of the printing system, the requirements of Subsection 401.074 c. of this Specification will apply.

The batch plant shall accurately proportion the various materials in the proper order by weight. The entire batching and mixing cycle shall be continuous and shall not require any manual operations. The batch plant shall use auxiliary interlock circuits to trigger an audible alarm whenever an error exceeding the acceptable tolerance occurs. Along with the alarm, the printer shall print an asterisk on the delivery slip in the same row containing the out-of-tolerance weight. The automatic proportioning system shall be capable of consistently delivering material within the full range of batch sizes. When RAP is being used, the plant must be capable of automatically compensating for the moisture content of the RAP.

All plants shall be equipped with an approved digital recording device. The delivery slip load ticket shall contain information required under Subsection 108.1.3, Provisions Relating to Certain Measurements, Mass and Paragraphs a, b, and c of Subsection 401.073.

401.073 Automatic Ticket Printer System on Automatic HMA Plant

An approved automatic ticket printer system shall be used with all approved automatic HMA plants. The requirements for delivery slips for payment of materials measured by weight, as given in the following Sections, shall be waived: 108.1.3 a., 108.1.3 b., 108.1.3 c., and 108.1.3 d. The automatic printed ticket will be considered as the Weight Certificate.

The requirements of Subsection 108.1.3 f., Delivery Slips, shall be met by the weigh slip or ticket, printed by the automatic system, which accompanies each truckload, except for the following changes:

a. The quantity information required shall be individual weights of each batch or total net weight of each truckload.

b. Signatures (legible initials acceptable) of Weighmaster (required only in the event of a malfunction as described in 401.074 c.).
c. The MaineDOT designation for the JMF.

401.074 Weight Checks on Automatic HMA Plant

At least twice during each five days of production either of the following checks will be performed:

a. A loaded truck may be intercepted and weighed on a platform scale that has been sealed by the State Sealer of Weights and Measures within the past 12 months. The inspector will notify the producer to take corrective action on any discrepancy over 1.0%. The producer may continue to operate for 48 hours under the following conditions:
   1. If the discrepancy does not exceed 1.5%; payment will still be governed by the printed ticket.
   2. If the discrepancy exceeds 1.5%, the plant will be allowed to operate as long as payment is determined by truck platform scale net weight.

   If, after 48 hours the discrepancy has not been addressed and reduced below 1.0%, then plant operations will cease. Plant operation may resume after the discrepancy has been brought within 1.0%.
b. Where platform scales are not readily available, a check will be made to verify the accuracy and sensitivity of each scale within the normal weighing range and to assure that the interlocking devices and automatic printer system are functioning properly.
c. In the event of a malfunction of the automatic printer system, production may be continued without the use of platform truck scales for a period not to exceed the next two working days, providing total weights of each batch are recorded on weight tickets and certified by a Licensed Public Weighmaster.

401.08 Hauling Equipment Trucks for Hauling Hot Mix Asphalt

Trucks for hauling Hot Mix Asphalt Pavement shall have tight, clean, and smooth metal dump bodies, which have been thinly coated with a small amount of approved release agent to prevent the mixture from adhering to the bodies. Solvents based agents developed to strip asphalts from aggregates will not be allowed as release agents.

All truck dump bodies shall have a cover of canvas or other water repellent material capable of heat retention, which completely covers the mixture. The cover shall be securely fastened on the truck, unless unloading.

All truck bodies shall have an opening on both sides, which will accommodate a thermometer stem. The opening shall be located near the midpoint of the body, at least 12 inches above the bed.

401.09 Pavers

Pavers shall be self-contained, self-propelled units with an activated screed (heated if necessary) capable of placing courses of Hot Mix Asphalt Pavement in full lane widths specified in the Contract on the mainline, shoulder or similar construction.

On projects with no price adjustment for smoothness, pavers shall be of sufficient class and size to place Hot Mix Asphalt Pavement over the full width of the mainline travel way with a 10 feet minimum main screed with activated extensions.

The Contractor shall place Hot Mix Asphalt Pavement on the mainline with a paver using an automatic grade and slope controlled screed, unless otherwise authorized by the Authority. The controls shall automatically adjust the screed and increase or decrease the layer thickness to compensate for irregularities in the preceding course. The controls shall maintain the proper transverse slope and be readily adjustable so that transitions and super elevated curves can be properly paved. The controls shall operate from a fixed or moving reference such as a grade wire or ski type device (floating beam) with a minimum length of 30 ft, a non-contact grade control with a minimum span of 24 ft, except that a 40 ft reference shall be used on mainline projects.

The Contractor shall operate the paver in such a manner as to produce a visually uniform surface texture and a thickness within the requirements of Subsection 401.101, Surface Tolerances. The paver shall have a receiving hopper with sufficient capacity for a uniform spreading operation and a distribution system to place the mixture uniformly, without segregation in front of the screed. The screed assembly shall produce a finished surface of the required evenness and texture without tearing, shoving, or gouging the mixture. Pavers with extendible screeds shall have auger extensions and tunnel extenders as per the manufacturer's recommendations, a copy of which shall be available if requested.

The Contractor shall have the paver at the Project site sufficiently before the start of paving operations to be inspected and approved by the Authority. The Contractor shall repair or replace any paver found worn or defective, either before or during placement, to the satisfaction of the Authority. Pavers that produce an unevenly textured or non-uniform mat will be repaired or replaced before continuing to place HMA on MTA projects. On a daily basis, the Contractor shall perform density testing across the uncompacted mat being placed, at 12 inch intervals. If the values vary by more than 2.0 percent from the mean, the Contractor shall make adjustments until the inconsistencies are remedied.

Failure to replace or repair defective placement equipment may result in a letter of suspension of work and notification of a quality control violation resulting in possible monetary penalties as governed by Section 106, Quality.

401.10 Rollers

Rollers shall be static steel, pneumatic tire, oscillatory, or approved vibrator type. Rollers shall be in good mechanical condition, capable of starting and stopping smoothly, and be free from backlash when reversing direction. Rollers shall be equipped and operated in such a way as

to prevent the picking up of hot mixed material by the roller surface. The use of rollers, which result in crushing of the aggregate or in displacement of the HMA will not be permitted. Any Hot Mix Asphalt Pavement that becomes loose, broken, contaminated, shows an excess or deficiency of Performance Graded Asphalt Binder, or is in any other way defective shall be removed and replaced at no additional cost with fresh Hot Mix Asphalt Pavement, which shall be immediately compacted to conform to the adjacent area.

The Contractor shall repair or replace any roller found to be worn or defective, either before or during placement, to the satisfaction of the Authority. Rollers that produce grooved, unevenly textured or non-uniform mat will be repaired or replaced before continuing to place HMA on MTA projects.

The type of rollers to be used and their relative position in the compaction sequence shall generally be the Contractor's option, provided Specification densities are attained and with the following requirements:

a. On variable-depth courses, the first lift of pavement over gravel, reclaimed pavement, an irregular or milled surfaces, or on bridges, at least one roller shall be a 16 ton pneumatic-tired. Unless otherwise allowed by the Resident, pneumatic-tired rollers shall be equipped with skirting to minimize the pickup of HMA materials from the paved surface. When required by the Resident, the roller shall be ballasted to 20 ton.
b. Compaction with a vibratory or steel wheel roller shall precede pneumatic-tired rolling, unless otherwise authorized by the Authority.
c. Vibratory rollers shall not be operated in the vibratory mode when checking or cracking of the mat occurs, or on bridge decks.
d. Any method, which results in cracking or checking of the mat, will be discontinued and corrective action taken.
e. The use of an oscillating steel roller shall be required to compact all mixtures placed on bridge decks.

The maximum operating speed for a steel wheel or pneumatic roller shall not exceed the manufacturer's recommendations, a copy of which shall be available if requested.

401.101 Surface Tolerances

The Authority will check surface tolerance utilizing the following methods:

a. A 16 ft straightedge or string line placed directly on the surface, parallel to the centerline of pavement.
b. A 10 ft straightedge or string line placed directly on the surface, transverse to the centerline of pavement.

The allowable tolerance shall be ¼ inch in the segment as described above. This includes fresh HMA joints as well as new HMA adjoining existing pavement. The tolerance shall also apply to the cross slope in a single paver width with the exception that in no case shall the cross slope in the single paver width be inverted resulting in a depression as measured transverse to the direction of travel. The Contractor shall correct variations exceeding ¼ inch by removing

defective work and replacing it with new material as directed by the Authority. The Contractor shall furnish a 10 foot straightedge for the Authority's use.

401.11 Preparation of Existing Surface

The Contractor shall thoroughly clean the surface upon which Hot Mix Asphalt Pavement is to be placed of all objectionable material. When the surface of the existing base or pavement is irregular, the Contractor shall bring it to uniform grade and cross section. All surfaces shall have a tack coat applied prior to placing any new HMA course. Tack coat shall conform to the requirements of Section 409, Bituminous Tack Coat, Section 702, Bituminous Material, and all applicable sections of the Contract.

401.12 Hot Mix Asphalt Documentation

The Contractor and the Authority shall agree on the amount of Hot Mix Asphalt Pavement that has been placed each day. All delivery slips shall conform to the requirements of 401.073.

401.13 Preparation of Aggregates

The Contractor shall dry and heat the aggregates for the HMA to the required temperature. The Contractor shall properly adjust flames to avoid physical damage to the aggregate and to avoid depositing soot on the aggregate.

401.14 Mixing

The Contractor shall combine the dried aggregate in the mixer in the amount of each fraction of aggregate required to meet the JMF. The Contractor shall measure the amount of PGAB and introduce it into the mixer in the amount specified by the JMF.

The Contractor shall produce the HMA at the temperature established by the JMF.

The Contractor shall dry the aggregate sufficiently so that the HMA will not flush, foam excessively, or displace excessively under the action of the rollers. The Contractor shall introduce the aggregate into the mixer at a temperature of not more than 25°F above the temperature at which the viscosity of the PGAB being used is 0.150 Pa·s (Pascal-second).

The Contractor shall store and introduce into the mixer the Performance Graded Asphalt Binder at a uniformly maintained temperature at which the viscosity of the PGAB is between 0.150 Pa·s and 0.300 Pa·s. The aggregate shall be coated completely and uniformly with a thorough distribution of the PGAB. The Contractor shall determine the wet mixing time for each plant and for each type of aggregate used.

401.15 Spreading and Finishing

On areas where irregularities or unavoidable obstacles make the use of mechanical spreading and finishing equipment impracticable, the Contractor shall spread, rake, and lute the HMA with hand tools to provide the required compacted thickness. Solvent based agents developed to strip asphalts from aggregates will not be allowed as release agents.

On roads opened to two-way traffic, the Contractor shall place each course over the full width of the traveled way section being paved that day, unless otherwise noted by the Authority in Section 403, Hot Mix Asphalt Pavement.

In addition, hot mix asphalt pavement placed on bridges shall also conform to Section 508.04 and the following requirements.

a. The bottom course shall be placed with an approved rubber mounted paver of such type and operated in such a manner that the membrane waterproofing will not be damaged in any way.

b. The top course shall not be placed until the bottom course has cooled sufficiently to provide stability.

c. The Contractor will not be required to cut sample cores from the compacted pavement on the bridge deck, unless otherwise directed by Special Provisions.

d. After the top course has been placed, the shoulder areas shall be sealed 3 ft wide with two applications of an emulsified bituminous sealer meeting the requirements of Section 612.03 – Sealing and Section 702.12 – Emulsified Bituminous Sealing Compound. The first application shall be pre-mixed with fine, sharp sand, similar to mortar sand, as needed to fill all voids in the mix in the area being sealed. The second application may be applied without sand. The sealer shall be carried to the curb at the gutter line in sufficient quantity to leave a bead or fillet of material at the face of curb. The area to be sealed shall be clean, dry and the surface shall be at ambient temperature.

e. The furnishing and applying of the required quantity of sealer for the bridge shoulder areas shall be incidental to placing the hot mix asphalt pavement. The sealer shall be applied after 30 days of cure time on the new HMA placed.

f. The atmospheric temperature for all courses placed on bridge decks shall be 50°F or higher.

401.16 Compaction

Immediately after the Hot Mix Asphalt Pavement has been spread, struck-off, and any surface irregularities adjusted, the Contractor shall thoroughly and uniformly compact the HMA by rolling.

The Contractor shall roll the surface when the mixture is in the proper condition and when the rolling does not cause undue displacement, cracking, or shoving. The Contractor shall prevent adhesion of the HMA to the rollers or vibrating compactors without the use of fuel oil or other petroleum based release agents. Solvents designed to strip asphalt binders from aggregates will not be permitted as release agents on equipment, tools, or pavement surfaces.

The Contractor shall immediately correct any displacement occurring as a result of the reversing of the direction of a roller or from other causes to the satisfaction of the Authority.

Any operation other than placement of variable depth shim course that results in breakdown of the aggregate shall be discontinued. Any new pavement that shows obvious cracking, checking, or displacement shall be removed and replaced for the full lane width as directed by the Resident at no cost to the Authority.

Along forms, curbs, headers, walls, and other places not accessible to the rollers, the Contractor shall thoroughly compact the HMA with mechanical vibrating compactors. The Contractor shall only use hand tamping in areas inaccessible to all other compaction equipment. On depressed areas, the Contractor may use a trench roller or cleated compression strips under a roller to transmit compression to the depressed area.

Any HMA that becomes unacceptable due to cooling, cracking, checking, segregation or deformation as a result of an interruption in mix delivery shall be removed and replaced, with material that meets Contract Specifications at no cost to the Authority.

401.162 Voids

The HMA will be accepted for percent air voids on a sublot basis. Percent air voids will be determined in accordance with AASHTO T 312. Point of sampling will be from the truck at the plant. A sublot will consist of 500 tons. The number of samples per day will be computed as one for every 500 tons plus one for any additional fractional sublot that is equal to or greater than 100 tons or as directed by the Resident. There shall be a minimum of one sublot per day per JMF. One sample shall be taken and tested for each 500 tons of production or portions thereof. Full payment will be made for each 500 tons of production that meets the specified void range of 2.5 to 5.5 percent.

Payment reduction will be applied to each sublot (500 tons) that falls outside of this range. See Subsection 401.21.

401.163 PGAB Content

The HMA will be accepted for PGAB content on a sublot basis. PGAB content will be determined in accordance with AASHTO T 308. Point of sampling will be from the truck at the plant. A sublot will consist of 500 tons. The number of samples per day will be computed as one for every 500 tons plus one for any additional fractional sublot that is equal to or greater than 100 tons or as directed by the Resident. There shall be a minimum of one sublot per day per JMF.

Payment reduction will be applied to each sublot (500 tons) that falls outside the allowable limits. Note minimum asphalt content specified in Special Provision Section 403. See Subsection 401.21.

401.164 Density

Pavement density will be determined by comparing the density of six inch diameter full depth cores (for the course being laid) taken from the compacted pavement to the Theoretical Maximum Density of that core. Core locations shall be by random samples in conformance with ASTM-D979 & D3665. The Contractor shall supply a masonry saw with a 12 inch deep diamond wet cutting saw blade capable of cutting the six inch diameter cores.

For determination of pavement density, core samples six inches in diameter, for the full depth of the course being laid, shall be taken by the Contractor from the mixture incorporated in the work after finishing operations have been completed and the pavement has cooled to 70°F. Ice or dry ice shall be used to reduce temperature as necessary.

Vertical surface of the core area shall be coated with rubberized joint sealer prior to refilling with bituminous mixture. Cores will not be cut for shim pavement.

The joint sealer, bituminous mixture and the labor for obtaining these samples in the field and restoring the surface shall be furnished without charge by the Contractor. The joint sealant shall conform to Federal Specification SS-S-1401C and shall be incidental to the pavement items. Care must be exercised to avoid excess joint material on top of the finish mat and at the bottom of the joint.

No additional course shall be constructed on a course until the density of the sample has been established and approved.

The densities of the completed pavement shall be 92.5 to 97.0 percent of the theoretical maximum density obtained.

The pavement will be accepted for density on a sublot basis. A sublot will consist of 500 tons. The number of cores per day will be computed as one for every 500 tons plus one for any portion that does not equal 500 tons or as directed by the Resident. There shall be a minimum of one sublot per day per JMF.

Each sublot will be evaluated separately and full or partial payment will be made based on the results of tests performed on the cores.

Payment reduction will be applied to each core that has a density outside of the allowable range (92.5 to 97.0). See Subsection 401.21.

401.165 Longitudinal Joint Density

The Authority will measure the pavement density of longitudinal joints between adjoining mainline travel lanes.

Pavement joint density will be determined by comparing the density of six inch diameter full depth cores (for the course being laid) taken from the compacted pavement to the Theoretical Maximum Density of that core. The edge of the core nearest the joint shall be a 1” offset from the visible longitudinal joint as determined by the resident. Longitudinal core locations shall be determined by random sampling in conformance with ASTM-D979 & D3665. The Contractor shall supply a masonry saw with a 12 inch deep diamond wet cutting saw blade capable of trimming the underside of the six inch diameter cores if necessary. The resident shall determine if trimming is required and the core will be labeled as such.

For determination of pavement joint density, core samples six inches in diameter, for the full depth of the course being laid, shall be taken by the Contractor from the mixture

incorporated in the work after finishing operations have been completed and the pavement has cooled to 70°F. Ice or dry ice shall be used to reduce temperature as necessary.

Vertical surface of the core area shall be coated with rubberized joint sealer prior to refilling with bituminous mixture. Cores will not be cut for shim pavement.

The joint sealer, bituminous mixture and the labor for obtaining these samples in the field and restoring the surface shall be furnished without charge by the Contractor. The joint sealant shall conform to Federal Specification SS-S-1401C and shall be incidental to the pavement items. Care must be exercised to avoid excess joint material on top of the finished mat and at the bottom of the joint.

No additional course shall be constructed on a course until the density of the sample has been established and approved.

The minimum density of the completed pavement shall be 91.0 percent of the theoretical maximum density obtained. Two consecutive failing tests shall result in production shut down. Prior to resuming paving operations, the contractor quality control unit shall satisfy the Authority that the paving operation will produce joint densities in compliance with the Specifications.

The pavement will be accepted for density on a sublot basis. A sublot will consist of 2640 lineal feet per lane. The number of cores per day will be computed as one for every 2640 lineal feet plus one for any additional fractional sublot or as directed by the Resident. There shall be a minimum of 1 sublot per day per JMF.

Each sublot will be evaluated separately and full or partial payment will be made based on the results of tests performed on the cores.

Payment reduction will be applied to each sublot that has a density lower than 91.0% as outlined below.

PERCENT COMPACTION	PERCENT PAY
91.0 or greater	100
90.0 to 90.99	95
89.0 to 89.9	85
88.9 or less	0

An example of payment reduction is as follows:

Total daily paved length divided by 2640’

Example 7200’ / 2640 = 2.73 sublots

Total daily tons divided by the number of sublots

Example 1260 ton / 2.73 = 461.54 tons per sublot

Percent pay based on density based on tons per sublot

Example sublot 1 core density 90.3% corresponds to 95% pay for the sublot
461.54 * 0.95 = 438.46
461.54 – 438.46 = 23.08
Deduction would be 23.08 tons for sublot 1.

401.17 Joints

The Contractor shall construct wearing course transverse and longitudinal joints in such a manner that minimum tolerances shown in Subsection 401.101, Surface Tolerances, are met when measured with a straightedge.

The paver shall always maintain a uniform head of HMA during the joint construction.

The HMA shall be free of segregation and meet temperature requirements outlined in Subsection 401.04. Transverse joints of the wearing course shall be straight and neatly trimmed. The Contractor may form a vertical face exposing the full depth of the course by inserting a header, by breaking the bond with the underlying course, or by cutting back with hand tools. The Authority may allow feathered or "lap" joints on lower base courses or when matching existing base type pavements.

Longitudinal joints shall be generally straight to the line of travel, and constructed in a manner that will best ensure joint integrity. Methods or activities that prove detrimental to the construction of straight, sound longitudinal joints will be discontinued.

Extra care shall be taken to insure satisfactory vertical joints in the pavements. The Contractor shall apply a coating of joint sealant immediately before paving all cold joints (temperatures less than 120°F) to the vertical face of the wearing surface unless otherwise directed by the Resident. A heavy application of tack coat shall be applied to the vertical face of all cold joints on lower lifts. The Contractor shall use an approved spray apparatus designed for covering a narrow surface. The Authority may approve application by a brush for small surfaces, or in the event of a malfunction of the spray apparatus, but for a period of not more than one (1) working day. Joint sealer shall conform to Federal Specification SS-S-1401C. The Contractor shall submit to the Resident a manufacturer's certification for the joint sealant (SS-S-1401C).

Where pavement under this Contract joins an existing pavement or when the Authority directs, the Contractor shall cut the existing pavement along a smooth line, producing a neat, even, vertical joint. The Authority will not permit broken or raveled edges. The cost of all work necessary for the preparation of joints is incidental to related Contract pay items.

401.18 Quality Control

The Contractor shall submit for approval and operate in accordance with the approved Quality Control Plan (QCP) to assure a product meeting the contract requirements. The QCP shall meet the requirements of Section 106.4 – Quality Control and this Section. The Contractor shall not begin paving operations until the Authority approves the QCP in writing. Prior to placing any mix, the Authority and the Contractor shall hold a Pre-paving conference to discuss the paving schedule, source of mix, type and amount of equipment to be used, sequence of paving pattern, rate of mix supply, random sampling, project lots and sublots and traffic control.

A copy of the QC random numbers to be used on the project shall be provided to the Resident.
The Authority's random numbers for Acceptance testing shall be generated and on file with the Resident and the Project Manager. All personnel of the Authority and the Contractor who have significant information relevant to the paving items shall attend, including the responsible onsite paving supervisor for the Contractor. The Resident will prepare minutes of the conference and distribute them to all attendees. Any requests to revise the minutes must be made to the Resident within 7 days of receipt. These minutes will constitute the final record of the pre-paving conference.

The QCP shall address any items that affect the quality of the Hot Mix Asphalt Pavement including, but not limited to, the following:

a. JMF(s)
b. Hot mix asphalt plant details
c. Stockpile Management (to include provisions for a minimum 2 day stockpile)
d. Make and type of paver(s)
e. Make and type of rollers including weight, weight per inch of steel wheels, and average contact pressure for pneumatic tired rollers
f. Name of QCP Administrator, and certification number
g. Name of Process Control Technician(s) and certification number(s)
h. Name of Quality Control Technician(s) and certification number(s)
i. Mixing and transportation including process for ensuring that truck bodies are clean and free of debris or contamination that could adversely affect the finished pavement
j. Testing plan
k. Laydown operations including longitudinal joint construction, procedures for avoiding paving in inclement weather, type of release agent to be used on trucks tools and rollers, compaction of shoulders, tacking of all joints, methods to ensure that segregation is minimized, procedures to determine the maximum rolling and paving speeds based on best engineering practices as well as past experience in achieving the best possible smoothness of the pavement. Solvent based agents developed to strip asphalts from aggregates will not be allowed as release agents
l. Examples of Quality Control forms including a daily plant report, daily paving report and delivery slip template for any plant to be utilized.
m. Silo management and details (can show storage for use on project of up to 36 hours)
n. Provisions for varying mix temperature due to extraordinary conditions or production limitations. If a warm-mix technology is utilized, a proposed target production range(not to exceed 50 F) will be provided for each mix design.
o. Name and responsibilities of the Responsible onsite Paving Supervisor
p. Method for calibration/verification of Density Gauge
q. A note that all testing will be done in accordance with AASHTO and the Maine DOT
Policies and Procedures for HMA Sampling and Testing
r. A detailed description of RAP processing, stockpiling and introduction into the plant as well as a note detailing conditions under which the percent of RAP will vary from that specified on the JMF

s. A detailed procedure outlining when production will be halted due to QC or Acceptance testing results

t. A plan to address the change in PGAB source or supplier and the potential co-mingling of differing PGAB's.

u. Provisions for how the QCP will be communicated to the Contractor's field personnel

The QCP shall include the following technicians together with following minimum requirements:

a. QCP Administrator – A qualified individual shall administer the QCP. The QCP Administrator must be a full-time employee of or a consultant engaged by the Contractor or paving subcontractor. The QCP Administrator shall have full Authority to institute any and all actions necessary for the successful operation of the QCP. The QCP Administrator (or its designee in the QCP Administrator's absence) shall be available to communicate with the Authority at all times. The QCP Administrator shall be certified as a Quality Assurance Technologist certified by the New England Transportation Technician Certification Program (NETTCP).

b. Process Control Technician(s) (PCT) shall utilize test results and other quality control practices to assure the quality of aggregates and other mix components and control proportioning to meet the JMF(s). The PCT shall inspect all equipment used in mixing to assure it is operating properly and that mixing conforms to the mix design(s) and other Contract requirements, and that delivery slips and plant recordation accurately reflects the mix being produced with all required information. The QCP shall detail how these duties and responsibilities are to be accomplished and documented, and whether more than one PCT is required. The Plan shall include the criteria to be utilized by the PCT to correct or reject unsatisfactory materials. The PCT shall be certified as a Plant Technician by the NETTCP.

c. Quality Control Technician(s) (QCT) shall perform and utilize quality control tests at the job site to assure that delivered materials meet the requirements of the JMF(s). The QCT shall inspect all equipment utilized in transporting, laydown, and compacting to assure it is operating property and that all laydown and compaction conform to the Contract requirements. The QCP shall detail how these duties and responsibilities are to be accomplished and documented, and whether more than on QCT is required. The QCP shall include the criteria utilized by the QCT to correct or reject unsatisfactory materials. The QCT shall be certified as a Paving Inspector by the NETTCP.

The QCP shall detail the coordination of the activities of the Plan Administrator, the PCT and the QCT. The Project Superintendent shall be named the QCP, and the responsibilities for successful implementation of the QCP shall be outlined

401.191 Inspection/Testing

All quality control testing at the plant and paving site for bituminous concrete paving shall be provided by the Contractor and will be incidental to the various items of the Contract. Quality control testing to verify the job mix formula at the plant shall be comprised of a sample

taken and tested for each 500 tons of production. The plant will be shut down for two consecutive out of Specification test results for VMA, VFB, Fbe, PGAB content, gradation, and/or voids. Prior to resuming paving operations, the plant quality control unit shall satisfy the Authority that the plant production is in compliance with the Specifications. The plant, at no additional cost to the Authority, shall assign qualified quality control staff personnel and have an on-site laboratory equipped to perform all tests.

The Contractor shall submit a list of on-site laboratory and sampling facilities, including available equipment.

Adequate and convenient sampling facilities shall be provided, allowing the Resident and the Authority's designated quality assurance personnel to obtain representative samples from the full width and depth of the discharge area of each aggregate bin. The sampling tray shall be structurally supported during the sampling operation. Access to the sampling facilities shall be provided. The use of such access shall not be more difficult than climbing a ladder leading to a secure platform with railings.

Final acceptance shall be based on quality assurance tests to assure compliance with the job mix formula as established. Samples and certified quality control reports shall be available to the Resident and the Authority's designated quality assurance personnel as often as requested. Sample locations will be random in compliance with ASTM D3665 or as directed by the Resident.

When plant inspection is maintained, the material will be considered acceptable for use when the specified tests from samples obtained at the production plant indicate conformance to the approved job mix formula.

Quality assurance testing services for bituminous concrete pavement shall be provided by the Authority. The Contractor shall provide adequate space and all lab equipment, materials and chemicals at the bituminous plant necessary to verify job mix formula (asphalt content (AASHTO T 164 or T 308) and gradations). Upon completion, the Contractor shall be responsible for the proper disposal of all materials and chemicals. This work will not be measured separately for payment, but shall be incidental to the various items of the Contract.

A. Inspection. The Resident, or his authorized representative, shall have access and use of the laboratory facilities at any time and access to all parts of the plant for:

1. Inspection of the condition and operations of the plant.
2. Confirmation of the adequacy of equipment in use.
3. Verification of the character and proportions of the mixture.
4. Determination of temperatures being maintained in the preparation of the mixtures.
5. Inspection of incidental related procedures.
6. Performing quality assurance testing.

B. Plant Testing Laboratory. The Contractor shall provide a plant testing laboratory for use by the Authority's quality assurance personnel for acceptance testing functions.

The plant laboratory shall be available at the following times for use by the Authority's quality assurance personnel:

1. During periods of pavement production;
2. During periods of sampling and testing; and,
3. Whenever materials subject to the provisions of these Specifications are being supplied or tested.

The Authority's quality assurance personnel will always have priority in use of the laboratory. The laboratory shall have sufficient equipment in order for both (Authority's and Contractor's) testing representatives to operate efficiently.

The plant testing laboratory shall have a floor space area of not less than 150 square feet, with a ceiling height of not less than 7-1/2 feet. The laboratory shall be weather tight, sufficiently heated in cold weather and air-conditioned in hot weather, to maintain temperatures for testing purposes of 70°F ± 5°F.

As a minimum the plant testing laboratory shall have:

1. Adequate artificial lighting.
2. Electrical outlets sufficient in number and capacity for operating the required testing equipment and drying samples.
3. Two fire extinguishers, Underwriter's Laboratory approved.
4. Work benches for testing, minimum 2-1/2 feet by 10 feet.
5. Desk with two chairs.
6. Sanitary facilities convenient to testing laboratory.
7. Exhaust fan to outside air, minimum 12 inch blade diameter.
8. A direct telephone line and telephone including answering machine and FAX machine, operating 24-hours per day, seven days a week.
9. File cabinet with lock for Resident.
10. Sink with running water, attached drain board and drain.
11. Metal stand for holding washing sieves.
12. A Two element hot plate or other comparable heating device, with dial type thermostatic controls for drying aggregates.
13. Mechanical shaker and appropriate sieves (listed in 639.06) meeting the requirements of ASTM E11.
14. Superpave gyratory compactor.
15. Oven, thermostatically controlled, inside minimum one cubic foot.
16. Two volumetric specific gravity flasks, 500 CC.
17. Other necessary hand tools required for sampling and testing.
18. Library containing Contract Specification, latest ASTM Volumes 4.03 and 4.04, AASHTO Materials Parts I and II, and Asphalt Institute Publications MS-2 and SS-1.
19. Equipment for Maximum Theoretical Density meeting the requirements of AASHTO T209 and equipment for Bulk Spec. Gravity meeting the requirements of AASHTO T166.
20. Infra-red temperature measuring device for use at both plant and Project site.
21. Necessary equipment for extraction (wet sample) testing.
22. Diamond blade saw for trimming pavement cores.

23. Two ovens.
24. All equipment (scales, Superpave gyratory compactor, etc.) to have current calibrations and certifications.

Approval of the plant and testing laboratory by the Resident requires all the above facilities and equipment to be in good working order during pavement production, sampling and testing. Failure to provide any of the above shall be sufficient cause for disapproving the bituminous plant operations.

401.21 Method of Measurement

The Authority will measure Hot Mix Asphalt Pavement by the ton in accordance with Subsection 108.1, Measurement of Quantities for Payment.

This Subsection is amended by the following:

A reduction in payment will occur when the voids, asphalt content, and density are other than the limits specified below for 100 percent payment. The payment reduction for voids and PGAB content and density will be based upon each sublot (500 tons) of production as specified in Subsections 401.162, 401.163 and 401.164. The Contractor may request one retest for each failing sublot for core density only. The original core density and the recut core density shall be averaged together to determine payment for the sublot. No retest will be allowed for voids or asphalt content. The Contractor shall pay $100.00 for each additional core tested. Pavement restoration will not be measured separately for payment, but shall be incidental to the respective pay item.

Any lot resulting in zero payment shall be removed, disposed of and replaced at no additional cost to the Authority. Replacement pavement will be paid for based on the accepted and payment criteria specified herein.

CORE DENSITY VS. CORE THEORETICAL MAXIMUM DENSITY COMPACTION (SURFACE) 92.5-97 PERCENT	
PERCENT COMPACTION	**PERCENT PAYMENT**
92.5 - 97.0	100
91.5 - 92.4, 97.1 - 97.9	95
90.5 - 91.4, 98.0 - 98.9	90
89.5 - 90.4, 99.0 - 99.9	75
<89.5, > 99.9	0
Note: Percent compaction is the percentage of the field core density as compared to the Theoretical Maximum Density (TMD) of that core.	

AIR VOIDS – 2.5 – 5.5 PERCENT	
VOIDS	**PAYMENT PERCENT**
2.5 to 5.5	100
2.0 - 2.4, 5.6 - 6.1	95
1.5 – 1.9, 6.2 – 6.6	90
1.0 - 1.4, 6.7-7.1	75
<1.0, >7.1	0
Note: Voids are based on the average of the test specimens fabricated at the plant for each sublot (500 tons).	

Payment for PGAB content shall be based on the JMF aim with an allowable production tolerance of 0.4% except that test results which fall outside of the following ranges shall not be permitted

4.75 mm	6.0 – 7.5
9.5 mm	5.7 – 7.5
12.5 mm	5.2 – 6.4
19.0 mm	4.7 – 6.1

4.75 mm PGAB CONTENT	
% PGAB	% PAYMENT
JMF Aim ± 0.4	100
JMF Aim + 0.5 , - 0.5 , < 6.00	95
JMF Aim + 0.6 , - 0.6 , < 5.90	85
JMF Aim + 0.7 , - 0.7 , < 5.80	75
JMF Aim + 0.8 , - 0.8 , ≦ 5.70, > 7.50	50
Note: PGAB content is based on samples tested at the plant for each 500 Ton sublot	

9.5 mm PGAB CONTENT	
% PGAB	% PAYMENT
JMF Aim ± 0.4	100
JMF Aim + 0.5 , - 0.5 , < 5.7	95
JMF Aim + 0.6 , - 0.6 , < 5.6	85
JMF Aim + 0.7 , - 0.7 , < 5.5	75
JMF Aim + 0.8 , - 0.8 , ≦ 5.4, > 7.5	50
Note: PGAB content is based on samples tested at the plant for each 500 Ton sublot	

12.5 mm PGAB CONTENT	
% PGAB	% PAYMENT
JMF Aim ± 0.4	100
JMF Aim + 0.5 , - 0.5 , < 5.1	95
JMF Aim + 0.6 , - 0.6 , < 5.0	85
JMF Aim + 0.7 , - 0.7 , < 4.9	75
JMF Aim + 0.8 , - 0.8 , ≦ 4.8, > 6.4	50
Note: PGAB content is based on samples tested at the plant for each 500 Ton sublot	

19.0 mm PGAB CONTENT	
% PGAB	% PAYMENT
JMF Aim ± 0.4	100
JMF Aim + 0.5 , - 0.5 , < 4.6	95
JMF Aim + 0.6 , - 0.6 , < 4.5	85
JMF Aim + 0.7 , - 0.7 , < 4.4	75
JMF Aim + 0.8 , - 0.8 , ≦ 4.3, > 6.1	50
Note: PGAB content is based on samples tested at the plant for each 500 Ton sublot	

As an example of payment reduction, if a sublot of 500 tons of 12.5mm was tested and found to have 96 percent TMD compaction, 5.8 percent air voids and asphalt content of 5.19 percent, the payment reduction would be as follows:

500 tons x 1.00	= 500 tons payment	=	0 tons reduction (compaction)
500 tons x 0.95	= 475 tons payment	=	25 tons reduction (voids)
500 tons x 0.95	= 475 tons payment	=	25 tons reduction (asphalt content)

Payment = 500 tons - (0 + 25 + 25) = 450 tons.

401.22 Basis of Payment

The Authority will pay for the work, in place and accepted, in accordance with the applicable sections of this Section, for each type of HMA specified.

The Authority will pay for the work specified in Subsection 401.11, for the HMA used, except that cleaning objectionable material from the pavement and furnishing and applying bituminous material to joints and contact surfaces is incidental.

Payment for this work under the appropriate pay items shall be full compensation for all labor, equipment, materials, and incidentals necessary to meet all related Contract requirements, including design of the JMF, implementation of the QCP, obtaining core samples, transporting cores and samples, filling core holes, applying specified material to joints, and providing testing facilities and equipment.

SPECIAL PROVISION

SECTION 403

HOT BITUMINOUS PAVEMENT

Desc. of Course	Grad. Design	Item Number	Bit Cont. % of Mix	Total Thick	No. Of Layers	Comp. Notes
			Mainline Mill and Fill			
Wearing	12.5 mm	403.2083	5.2 min. to 6.4	1-1/2 in.	1	A, B, C, D, E F, & G
Shim	4.75 mm	403.211	5.7 min to 7.50	1/2 in.	1	A, B, C, D, E, & F
			Cash Lane Mill and Fill			
Wearing	12.5 mm	403.2083	5.2 min. to 6.4	1-1/2 in.	1	A, B, C, D, E & F
Shim	4.75 mm	403.211	5.7 min to 7.50	1/2 in.	1	A, B, C, D, E, & F
			Mainline Full Depth Construction			
Wearing	12.5 mm	403.2083	5.2 min. to 6.4	1-1/2 in.	1	A, B, C, D, E F, & G
Binder	12.5 mm	403.213	5.2 min. to 6.4	1-1/2 in.	1	A, B, C, D, E & F
Base	19 mm	403.207	4.7 min to 6.10	7 in.	3	A, B, C, D, E & F
			Variable Depth Construction			
Wearing	12.5 mm	403.2083	5.2 min. to 6.4	1-1/2 in.	1	A, B, C, D, E F, & G
Binder	12.5 mm	403.213	5.2 min. to 6.4	1-1/2 in.	1	A, B, C, D, E & F
Base	19 mm	403.207	4.7 min to 6.10	3-3/4 in.	2	A, B, C, D, E & F
			Mainline Full Depth Construction – Hand Placed Paid as Item 403.209 including but not limited to drainage trenches and median barrier hand placed areas			
Wearing	9.5 mm	403.209	5.2 min. to 6.4	1 to 1-1/2 in.	1	A, B, C, D, E & F
Binder	12.5 mm	403.209	5.2 min. to 6.4	1-1/2 in.	1	A, B, C, D, E & F
Base	19 mm	403.209	4.7 min to 6.10	7 in.	3	A, B, C, D, E & F

COMPLEMENTARY NOTES

A. The required PGAB for Items 403.2083 will meet a **PG 64E-28** grading. Refer to provisions of 403.02 – General for HMA, for additional testing and documentation requirements. The required minimum PGAB for Items 403.207, 403.209, 403.211, and 403.213 shall be a **PG 64-28** grading.

B. A maximum of 15 percent RAP may be used in the Hot Mix Asphalt.

C. The MaineDOT will conduct the job mix verification. The aggregate qualities shall meet the design traffic level of 3 to < 10 million ESAL for mix placed under this Contract. The design, verification, Quality Control, and Acceptance tests for this mix will be performed at **75 gyrations**.

D. No vehicular traffic or loads shall be permitted on newly completed pavement until adequate stability has been attained and the material has cooled sufficiently to prevent distortion or loss of fines. The newly paved area may be opened to traffic after the internal temperature of the pavement has cooled to 120°F. The Resident will test the internal temperature of the pavement and shall be the sole judge as to the opening to traffic. The period of time before opening to traffic may be extended at the discretion of the Resident. The lane closure may not be removed until the internal temperature has cooled to 120°F.

E. Joints shall conform to Subsection 401.17.

F. Tack coat shall be applied to the pavement at a rate of 0.03G/SY prior to placing the surface course. Tack coat is required between all lifts of pavement, or as directed by the Resident.

G. Asphalt cement shall conform to the provisions of 403.02 – Polymer Modified PGAB for HMA.

SPECIAL PROVISION

SECTION 403

HOT BITUMINOUS PAVEMENT

(Hot Mix Asphalt, 12.5 mm (Polymer Modified))

403.01 Description

This work shall also consist of the construction, maintenance and removal of all temporary bituminous ramps at locations as shown on the Plans or as directed by the Resident.

403.02 General

The Contractor shall compose the Hot Mix Asphalt Pavement with aggregate, Performance Graded Asphalt Binder (PGAB), and mineral filler if required. The Performance Graded Asphalt Binder (PGAB) shall be polymer modified as detailed in this special provision and shall conform to the requirements of AASHTO M 320. The PG64E-28 Binder shall contain a minimum of 2.5% Styrene-Butadiene-Styrene (SBS) polymer {BWT} in a homogeneous blend. The stability of the modified binder shall be verified in accordance with ATSM D7173 using the Dynamic Shear Rheometer (DSR). The DSR $G^*/\sin(\delta)$ results from the top and bottom sections of the ATSM D7173 test shall not differ by more than 10%. The results of ASTM D7173 shall be included on the Certified Test Report. The binder shall meet the requirements of AASHTO M 332 (including Appendix X1).

Polymer-Modified

The RTFOT (AASHTO T 240) residue of the polymer modified PGAB shall be tested by the Contractor according to ASTM D 6084 and have a minimum elastic recovery value of 60% at a test temperature of 25 °C. The Contractor shall provide the Authority with documentation and test results from the asphalt binder provider showing that the polymer modified PGAB meets the requirements of this special provision. The base asphalt binder PGAB shall be unmodified and meet a **PG 58-28** to **PG 64-28** grading. The Authority may take an informational samples of the polymer modified PGAB at any time to evaluate its elastic recovery value.

403.03 Construction

All areas which have been milled or overlaid shall have a minimum 35 foot temporary ramp constructed at the milled or overlaid limits prior to opening the roadway to traffic. Temporary ramps shall be constructed using the same material as being placed on that day or as directed by the Resident. All temporary ramps are to be constructed on a sand joint. The Contractor shall be responsible for all repairs and maintenance required for the temporary ramps.

The Contractor shall be responsible for the layout of the longitudinal centerline between the travel lanes.

The sand and loose debris adjacent to the median guardrail shall be removed and disposed of by the Contractor off of Turnpike property.

The forty-five degree pavement safety edge needed between lanes 1 and 2 shall be incidental to the 202 pay items.

A minimum test strip of 100 tons placed at a nominal depth of 1 ½ inches, full lane width, shall be required. It shall be evaluated under testing requirements for mix volumetric and density. The exact location will be identified by the Authority. Prior to placement of the test strip, a leveling course (Item 403.211) shall be placed at the chosen location. A fog coat of Item 409.15, Bituminous Tack Coat, shall be applied to the level course prior to the placement of the HMA surface course, payment to be made under the 409.15 pay item. The test strip will be excluded from the remainder of the projects' QA analysis. The Contractor shall notify the Authority at least 48 hours in advance of placing the test strip. The test strip is intended to allow the Contractor to establish a method of compaction and adjust plant settings prior to mainline plant production.

403.04 Method of Measurement

The construction and removal of temporary ramps on sand joints, and maintaining the ramps will not be measured separately for payment, but shall be incidental to Items 403.

The removal of sand and loose debris will not be measured separately for payment, but shall be incidental to paving items.

Hot Mix Asphalt, 12.5 mm (Polymer Modified pavement with (up to) 15% RAP, placed as a wearing surface will be measured under Item 403.2083 Hot Mix Asphalt, 12.5 mm (Polymer Modified).

403.05 Basis of Payment

Hot Mix Asphalt, 12.5 mm (Polymer Modified) pavement with (up to) 15% RAP, placed as a wearing surface will be paid under Item 403.2083 Hot Mix Asphalt, 12.5 mm (Polymer Modified).

The following pay items are added:

Pay Item		Pay Unit
403.2083	Hot Mix Asphalt, 12.5 mm (Polymer Modified)	Ton

SPECIAL PROVISION

SECTION 409

BITUMINOUS TACK COAT

409.02 Bituminous Material

This Subsection is deleted in its entirety and replaced with the following:

Bituminous material shall conform to the Specifications for Emulsified Asphalt RS-1, of the AASHTO Designation M-140.

409.05 Equipment

Add "or as determined by the Resident", after the words "gal/yd^2]" in the fourth line of the second paragraph of this Subsection.

409.06 Preparation of Surface

The following paragraph is added:

All existing pavement and shoulder areas on which bituminous concrete mixtures are to be placed shall receive a tack coat. The surface area where the tack coat is to be applied shall be dry and cleaned of all dirt, sand, and loose material. Cleaning shall be accomplished by use of revolving brooms or mechanical sweepers. Undesirable material not removed by the above means shall be cleaned by hand-brooming or scraping, or a combination of both. Small areas otherwise inaccessible may be broomed with hand brooms. The tack coat shall be applied only when the existing surface is dry.

409.08 Method of Measurement

The following paragraphs are added:

Measurement will be based on delivery slips made out in duplicate by the Contractor and signed by the Resident, or his representative, at the point of delivery. One of these slips shall be retained by the Resident and one by the Contractor. Delivery slips shall be furnished by the Contractor and shall provide space for identifying the vehicle and driver, for stating the volume of material, the source of the material, the date, and the Resident or his representative's signature.

Material included in the delivery slips and not used or rejected shall be deducted from the amount being measured for payment. Each day's delivery slips shall be reconciled by the Contractor and the Resident within 24-hours.

Cleaning of the surface area where tack coat is to be applied shall be incidental to Item 409.15, Bituminous Tack Coat, Applied.

SPECIAL PROVISION

SECTION 419

SAWING AND SEALING JOINTS IN BITUMINOUS PAVEMENT

(Sawing Bituminous Pavement)

419.01 Description

This work consists of sawing bituminous concrete pavement as shown on the Plans, as specified herein or as approved by the Resident.

419.02 General

The bituminous concrete pavement to be sawed shall be accurately marked before cutting. The marking shall be in accordance with the locations as shown on the Plans or as approved by the Resident. Cutting shall be with an approved power driven saw with an abrasive blade.

Unless otherwise noted or directed, the sawcut shall be vertical, a minimum of 3/8 inch wide, and extend to the depth as shown on the Plans.

Residue or debris from the sawing operation shall be removed immediately and legally disposed of by the Contractor.

419.03 Method of Measurement

Sawing Bituminous Pavement will be measured by the linear foot of pavement actually cut and accepted. No additional payment will be made for variations in the pavement thickness.

419.04 Basis of Payment

Sawing Bituminous Pavement will be paid for at the Contract unit price per linear foot which shall be full compensation for all materials, tools, equipment, labor, and all incidentals necessary for the completion of the work to the satisfaction of the Resident. The disposal of sawcut residue shall be incidental to this item.

Payment will be made under:

Pay Item		Pay Unit
419.30	Sawing Bituminous Pavement	Linear Foot

SPECIAL PROVISION

SECTION 424

CRACK SEAL

424.01 Description

This work shall consist of the furnishing and placement of crack sealing material in the longitudinal, transverse and random cracks of the all milled pavement areas as well as all existing pavement to be overlaid as shown on the Plans, as specified herein or as approved by the Resident.

Placement shall consist of:

1. Crack cleaning and drying
2. Material preparation and application
3. Material finishing and shaping.

424.02 Materials

Asphalt Rubber Crack Sealer shall be an asphalt and rubber compound designed especially for improving the strength and performance of the base asphalt cement. Hot pour rubber crack sealant material shall conform to ASTM D-3405.

Fiber reinforcing material shall be short-length polyester fibers having the following properties:

Tensile Strength; ASTM D2256-90	>70,000 psi
Elongation at Break; ASTM D2256-90	38%

The asphalt rubber fiber compound shall be mixed at a rate of 3 percent fiber weight to the weight of the asphalt cement.

424.03 Weather

Asphalt Rubber Crack Sealer shall not be applied on a wet surface or when the atmospheric temperature is below 45°F as determined by an approved thermometer (placed in the shade at the crack sealing location), or when weather conditions are otherwise unfavorable for proper construction procedures.

424.04 Equipment

Equipment used in the performance of the work shall be subject to the Resident's or authorized representative's approval and shall be maintained in a satisfactory working condition at all times.

(a) Air Compressor: Air compressors shall be portable and capable of furnishing not less than four yd^3 of air per minute at not less than 90 psi pressure at the nozzle. The compressor shall be equipped with traps that will maintain the compressed air free of oil and water.

(b) Sweeper: Manually operated, gas powered air-broom or self-propelled sweeper designed especially for use in cleaning pavements shall he used to remove debris, dirt, and dust from the cracks.

(c) Hot Air Lance: Should operate with propane and compressed air in combination at 2000°F - 3000°F, exit air heated at 310 m/s [1000 ft/s]. The lance should draw propane from no smaller than a 100 pound tank using separate hoses for propane and air draw. The hoses shall be wrapped together with reflectorized wrap to keep them together and to protect workers in low light situations.

(d) Hand Tools: Shall consist of V-shaped squeegee, brooms, shovels, metal bars with chisel shaped ends, and any other tools which may be satisfactorily used to accomplish this work. The joints shall be raked open.

(e) Melting Kettle: The unit used to melt the joint sealing compound shall be a double boiler, indirect fired type. The space between inner and outer shells shall he filled with a suitable heat transfer oil or substitute having a flash point of not less than 320°C [608°F]. The kettle shall be equipped with a satisfactory means of agitating and mixing the joint sealer with 90 percent fibers at all times. This may be accomplished by continuous stirring with mechanically operated paddles and/or a continuous circulating gear pump attached to the heating unit. The kettle must be equipped with thermostatic control calibrated between 200°F and 550°F.

424.05 Preparations of Cracks

All cracks greater than 1/4 inch shall be blown free and raked-off of loose material, dirt, vegetation, and other debris by high pressure air. Material removed from the crack shall be removed from the pavement surface by means of a power sweeper or appropriate hand tools as required. Cracks showing evidence of vegetation after being blown out shall be additionally cleaned by appropriate hand tools and additionally blown out. All cracks must be blown and heated via the hot air lance 10 minutes prior to the crack being sealed. Distance between the hot air lance and the crack sealing unit should be no more than 50 feet to eliminate reinvasion of water, debris, and other incompressibles. All debris, vegetation, and water shall be removed to enhance adhesion of the crack sealing material. This work shall not be done during inclement weather.

424.06 Preparation and Placement of Sealer

The rubber and fiber crack sealer material shall be heated and applied at the temperature specified by the manufacturer and approved by the Resident or authorized representative. Any material that has been heated above the manufacturer's specification shall not be used. Material that is reheated or held at temperature for an extended period of time may be used as allowed by the manufacturer's specification and approval of the Resident or authorized representative. The Contractor shall provide the Resident or authorized representative with a suitable device for verifying the sealant temperature in the kettle and at the application site.

Any over application or spills are to be removed to the satisfaction of the Resident or authorized representative. Any sealed areas with damaged or contaminated sealer or visible voids are to be removed, prepared and resealed.

Sealer shall be delivered to the crack while the cracks are still hot from the hot air lance preparation through a pressure hose line and applicator shoe. The shoe width and the sealer overbanding area shall vary from 2 to 4 inches depending on the severity of the cracks. The applicator shall be followed by a V-shaped squeegee to minimize the thickness of the overband. Any loose material on the surface or in the crack, which may contaminate the crack sealer or impede bonding of the sealant to the pavement, is to be removed by hand tools prior to crack filling. No crack filling material shall be applied in a crack that is wet or where frost, snow, or ice is present.

424.07 Quality of Work

Excess of spilled sealer shall be removed from the pavement by approved methods and discarded. Any quality of work determined to be below normal acceptable standards will not be accepted and will be corrected and/or replaced as directed by the Resident or authorized representative at no additional cost to the Authority.

424.08 Method of Measurement

Asphalt Rubber Fiber Crack Sealer will be measured by the pound of sealant used. The manufacturer's weights of the sealant will be accepted as the basis for measurement.

424.09 Basis of Payment.

Asphalt Rubber Fiber Crack Sealer will be paid for at the Contract unit price per pound complete in place. This price shall be full compensation for furnishing and placing crack sealer, including cleaning and drying cracks; and furnishing all labor, materials, tools, equipment and incidentals necessary to complete the work.

Payment will be made under:

Pay Item		Pay Unit
424.323	Asphalt Rubber Fiber Crack Sealer - Applied	Pound

SPECIAL PROVISION

SECTION 502

STRUCTURAL CONCRETE

This Subsection is deleted in its entirety and replaced with the following:

502.01 Description

This work shall consist of furnishing and placing Portland Cement Concrete for structures and incidental construction in accordance with these Specifications and in conformity with the lines, grades and dimensions shown on the Plans or established, or for placing concrete fill or underwater seals for foundations where called for on the Plans.

502.02 Classification

The Portland Cement Concrete shall be the class indicated on the Plans.

502.03 Materials

Materials shall meet the requirements specified in the following Subsections of Division 700, Materials:

Portland cement and Portland-pozzolan cement	701.01
Water	701.02
Air-Entraining Admixtures	701.03
Water Reducing Admixtures	701.04
High Range, Water Reducing, Admixture	701.0401
Set-retarding Admixtures	701.05
Curing Materials	701.06
Waterstops	701.07
Smoothed Surfaced Asphalt Roll Roofing (formerly heavy roofing felt)	701.08
Fly Ash	701.10
Calcium Nitrite Solution	701.11
Silica Fume	701.12
Ground Granulated Blast Furnace Slag	701.13
Fine Aggregate for Concrete	703.01
Coarse Aggregate for Concrete	703.02
Alkali Silica Reactive Aggregates	703.0201
Preformed Expansion Joint Filler	705.01
Bridge Drains	711.04
Non-Metallic Conduit	715.03
Anchor Bolts	720.07

In Subsection 701.10, Fly Ash, the “Loss on Ignition (LOI)” paragraph is deleted and replaced with the following:

Loss on Ignition (LOI) - Shall be 6.0 percent maximum per AASHTO T105 (ASTM C311) provided the Fly Ash has a documented history of not adversely effecting the concrete air content, otherwise the LOI shall be 3.0 percent maximum per AASHTO T105 (ASTM C311).

502.04 Shipping and Storage

Cement may be shipped in bags or in bulk from pre-tested and approved silos at the cement mill. The cement shall be completely protected from rain and moisture. Any cement damaged by moisture or which fails to meet any of the specified requirements shall be rejected and removed from the site. If requested by the Resident, cement stored for a period longer than 60 days shall be retested before being used in the work.

Bags of cement in shipment or storage shall not be piled more than eight (8) bags high. Bags of cement which for any reason have become partially set or which contain lumps of caked cement shall be rejected. Shipments of cement in bags shall be separately stored in a manner as to provide easy access for identification and inspection of each shipment.

Fly ash and slag shall be stored in weather tight silos approved by the Resident. All silos shall be completely empty and clean before material is deposited therein, unless the silo already contains material of the same type and properties.

Fly ash or slag remaining in bulk storage for a period greater than one (1) year after completion of tests will be resampled and retested by the supplier before shipment or use.

Handling, shipping and stockpiling of aggregates shall be done in such a way as to minimize segregation and breakage.

Fine aggregate and each size of coarse aggregate shall be stored in completely separate stockpiles on prepared bases constructed of the same material as that to be stockpiled, with a minimum thickness of 300 mm [1 foot]. The ground under the prepared bases shall be reasonably graded to drain away from the stockpile and shall be free of brush or other harmful vegetation. The base shall be left in place, undisturbed for the duration of the use of the stockpile. Prepared bases can be salvaged for reuse provided this material is reprocessed. Barge floors, wood, metal or other approved hard surfaces shall be considered acceptable alternates for the prepared bases described above.

502.041 Testing Equipment

The Contractor shall provide testing equipment and materials as specified below for use by the Resident or their representative exclusively. The equipment shall be available and acceptable to the Resident one (1) week prior to placing any concrete. All costs associated with providing and maintaining testing equipment shall be incidental to the work and no additional payment will be made.

The Resident will maintain the test equipment in reasonable condition. However, the Contractor shall replace any equipment that becomes unusable due to normal wear and tear or which is stolen or damaged from other than the Resident's neglect or mistreatment. All such replacement costs shall be incidental to the work and no additional payment will be made.

A. Pressure air meter meeting requirements of AASHTO T152 (Type B) and all accessory pay items required for use with the particular design of apparatus. This shall include one nine inch mason trowel, one metal scoop nine inches long *x* five inches wide, one tamping rod conforming to AASHTO T119, one rubber mallet as described in AASHTO T152, one strike off bar (flat straight bar of steel). The air meter shall be functional and shall bear a current calibration certificate issued by a recognized testing laboratory. Current shall mean within the calendar year.

B. Two pocket dial thermometers 0˚F to 200˚F, one inch diameter dial, five inch pointed stem, unbreakable poly carbonate crystal, stainless steel case, stem and bezel. Accuracy required is one percent over entire range.

C. "Contractors" rubber tired wheelbarrow.

D. Two D-handle square end shovels 9-1/2 inches wide.

E. Two pair heavy duty, long cuff, rubber gloves.

F. Miscellaneous equipment: 16 oz. plastic squeeze bottle, five gallon bucket, scrub brush, paper towels, folding rule, and rubber syringe.

G. Small rod – one tamping rod conforming to AASHTO T277.

H. Slump cone.

I. 10 foot straightedge as required by the Resident.

502.05 Composition and Proportioning

Concrete shall be composed of a homogenous mixture Portland Cement, fly ash, or ground granulated blast furnace slag, fine aggregate, coarse aggregate, water and admixtures proportioned according to these Specifications and shall conform to the requirements of Table 1.

At least 45 days prior to placement of any concrete to be incorporated in the bridge or other concrete structure, the Contractor shall submit mix designs that meet the requirements of Table 1 along with the proposed sources of aggregates, cement, water and admixtures for each class of cement concrete specified. Sufficient material shall be obtained by the Authority's designated testing personnel at the proposed sources for verification of acceptability by test and for mix design. Materials failing to meet the specified requirements shall be rejected and new materials shall be resubmitted to the laboratory. The Authority's testing laboratory will determine the proportions of cement, aggregate, water, air entraining agents, and other admixtures of all specified and proposed concrete mixtures by means of trial design batches and tests using the consistencies, air content and other properties suitable for the work and in accordance with the latest applicable AASHTO or ASTM Standards and designations.

TABLE 1
MASTER LIMITS TABLE

Class of Concrete	Minimum Compressive Strength at 28 Days	Minimum Cementitious Content	Water Cement Ratio	Slump	Air Content	Maximum Coarse Aggregate Size (703.02)	Notes
	PSI	LB/CY		INCHES	%	INCHES	
A	4000	611	0.38±0.02	6 ± 2	6 ± 1	1	3, 4
AA	4000	658	0.38±0.02	3.5	5 to 7	3/4	1, 3
AAA	4500	658	0.38±0.02	6 ± 2	6 ± 1	3/4	3, 4
AAA – Deck	4500	658	0.42±0.02	6 ± 2	7.5 ± 1.5	3/4	3,4,6
AAA - Modified	4500	752	0.38±0.02	6 ± 2	6 ± 1.5	3/8	3,4
B	3000	517	0.40±0.02	6 ± 2	5 ± 1	1-1/2	1, 3
S	3500	635	0.38±0.02	6 ± 2	6 ± 1	1-1/2	1, 3
P	SEE PLANS	658	0.38±0.02	6 ± 2	5 ± 1	3/4	3, 4, 5
IS	3000	470	0.58	5 ± 1	3.0% Max	1-1/2	2, 3

NOTES:

1. All concrete shall contain either a normal water reducing admixture (Type A) or a high range water reducing admixture (HRWR) meeting the requirements of Subsection 701.0401. When a HRWR is used, a maximum of an 8.0 inch slump is allowed.

2. All concrete shall contain a non-chloride based, mid-range water reducing admixture (MRWR) meeting the requirements of ASTM C494.

3. All concrete shall contain a Portland Cement replacement. Portland Cement pre-blended with either fly ash or ground granulated blast-furnace slag may be used when accepted by the Resident.

   Due to the lower heat of hydration effect of high cement replacements, the Contractor is responsible for selecting a replacement level which is appropriate for the time of year if cold weather conditions are anticipated.

4. All concrete shall contain a high range water reducing admixture (HRWR) meeting the requirements of Subsection 701.0401. A minimum of one-half the design dosage of the HRWR should be added at the plant to insure thorough mixing. The HRWR should be added in strict accordance with the manufacturer's guidelines and limitations. The HRWR Guidelines shall be submitted to the Resident for review and approval. The concrete will not be slump tested by the Authority prior to the addition of the HRWR. The supplier shall provide the aggregate moisture adjustment and plant-added water on

the delivery tickets. If additional slump is required in the field, it will be achieved with additional HRWR (in accordance with the manufacturer's recommendations and limitations).

5. A calcium nitrate corrosion inhibitor meeting the requirements of ASTM 494 Type C shall be added at a rate of not less than three (3) gallons per cubic yard.

6. Synthetic Fiber Reinforcement shall be added to all Concrete Pavement Slabs and ORT Slabs concrete mixes in accordance with Special Provision 503 “Synthetic Fiber Reinforcement”.

Deck concrete (Class AAA - Deck) may gain strength slower than other Authority mix designs, and the Contractor shall plan construction operations accordingly.

The mix design submitted by the Contractor shall include the following information:

A. Description of individual coarse aggregate stockpiles, original source, bulk specific gravity, absorption, gradation and alkali silica reactivity test results. A combined coarse aggregate blended gradation shall be provided.

B. Description of fine aggregate, original source, bulk specific gravity, absorption, colorimetric, gradation and Fineness Modulus (F.M.).

C. Description and amount of cement and cement replacement material.

D. Target water cement ratio.

E. Target water content by volume.

F. Target strength.

G. Target air content, slump, and concrete temperature.

H. Target concrete unit weight.

I. Type and dosages of air entraining and chemical admixtures.

Approval by the Authority will be contingent upon the ability of the mix design proportions to meet the concrete strength requirement and other factors that affect durability. Cement replacements are included in the cementitious material.

Concrete mix designs shall contain 15 to 30 percent fly ash replacement by weight, or 25 to 50 percent slag cement replacement by weight. Class AAA-Deck concrete mix designs shall contain a maximum of 30 percent slag cement replacement by weight.

Cast-in-place concrete shall contain not more than 660 lb/cy of cementitious material, except for Class AAA-Modified which shall contain no more than 760 lb/cy of cementitious material.

All concrete mixes must be designed in accordance with the criteria of this Section. The design proportions with the fine aggregates designated as a percent of the total aggregate must be stated in terms of aggregate in a saturated, surface dry condition and the batch weights will be adjusted by the Contractor for the actual moisture of the aggregate at the time of use.

Based on the design parameters, including minimum cement factor and maximum water cement ratio, a curve representing the relation between the water/cement ratio and the average seven day and 28 day compressive, or earlier strength at which the concrete is to receive its full working load, will be established by the Authority's laboratory for a range of values including all of the compressive strengths required. The curves shall be established by at least three points, each point representing average values from at least three test specimens. Amount of water used in the concrete, as determined from the curve, shall correspond to the required average strength called for in the Specifications in accordance with the ACI 301-89, Table for Laboratory Mix Design Data – Required Average Compressive Strength shown below. When required, the consistency of the basic mix selected shall be adjusted by the use of high range water reducers.

LABORATORY MIX DESIGN DATA
REQUIRED AVERAGE COMPRESSIVE STRENGTH

SPECIFIED f'_c	REQUIRED f'_{cr}
LESS THAN 3000 PSI	f'_c + 1,000 PSI
3000 PSI TO 5000 PSI	f'_c + 1,200 PSI
OVER 5000 PSI	f'_c + 1,400 PSI
The curves shall be established by at least three (3) points, each point representing the average values from at least three (3) test specimens for each age of seven (7) and twenty-eight (28) days. Laboratory tests are valid for ninety (90) days.	

The laboratory adjusted mix design will then be forwarded to the Contractor for his use. No change in the source or character of the mix ingredients may be made without notice to the Resident, and no new mix ingredients shall be used until the Resident has approved such ingredients and new mix proportions, if they change. Additional testing, if required, shall be paid for by the Contractor.

502.0501 Quality Control

The Contactor shall control the quality of the concrete through testing, inspection and quality control practices which shall be sufficient to assure a product meeting the Contract requirements.

Concrete sampling for quality control (QC) shall be taken at the discharge point with pumped concrete sampling taken at the discharge end of the pump line.

For each truckload of concrete, the Contractor shall provide a Certificate of Compliance to the Authority at the time of the load placement. The Certificate of Compliance shall be a form acceptable to the Authority and shall include the following:

- Contract Name & Number
- Bridge Name (if applicable)
- Manufacturing Plant (Batching Facility)
- Name of Contractor (Prime Contractor)
- Date
- Time Batched/Time Discharged
- Truck No.
- Quantity (Quantity Batched this Load)
- Type of Concrete by Class and Producer Design Mix No.
- Cement Brand or Type, and Shipment Certification No.
- Temperature of Concrete at Discharge
- Target Weights per Cubic Yard and Actual Batched Weights for:

    1. Cement
    2. Pozzolanic additives, including fly ash, slag cement, and microsilica
    3. Coarse concrete aggregate
    4. Fine concrete aggregate
    5. Water (including free moisture in aggregates and water added at the Project)
    6. Admixtures brand and quantity (fl. oz./cubic yard)

        - Air-entraining admixture
        - Water reducing admixture
        - Other admixtures

- Placement Location

502.0502 Quality Assurance

The Authority will determine the acceptability of the concrete through a quality assurance program and field measurement of surface tolerance, alignment and trueness, plumb and batter, and finish.

The Authority will take verification tests at times deemed appropriate by the Resident. Verification tests will include compressive strength, air content and permeability.

Concrete sampling for verification tests will be taken at the discharge point, with pumped concrete sampling taken at the discharge end of the pump line.

Compressive strength test will be completed by the Authority in accordance with AASHTO T22 at 28 days except that no slump will be taken. The average of two cylinders will be used to determine compressive strength.

Testing for entrained air in concrete, at the rate of one test per load, shall be in accordance with AASHTO T152.

Determination of the concrete cover over reinforcing steel for structural concrete shall be made prior to concrete being placed in the forms. Bar supports, chairs, slab bolsters, and side form spacers shall meet the requirements of CRSI Chapter 3, Section 2.5 Class 1, Section 2.6 Class 1A or Section 4. All supports shall meet the requirements for type and spacing as stated in

the Concrete Reinforcing Steel Institute (CRSI) Manual of Standard Practice, Chapter 3. Concrete will not be placed until the placing of the reinforcing steel and supports have been approved by the Resident. If the Contractor fails to secure Authority approval prior to placement, the Contractor's failure shall be cause for removal and replacement at the Contractor's expense. The Contractor shall notify the Resident, at least 48-hours prior to the placement, when the reinforcing steel will be ready for checking. Sufficient time must be allowed for the checking process and any needed repairs.

Rejection by Resident - For material not meeting Project Specifications, the Authority at its sole discretion will:

A. Require the Contractor to remove and replace the entire affected placement with concrete meeting the Contract requirements at no additional expense to the Authority; or,

B. Accept the material at a reduced payment as determined by the Authority.

Surface Tolerance, Alignment and Trueness, Plumb and Batter, and Finish - The Resident will measure each of these properties as follows:

A. Surface Tolerance - Exposed horizontal and sloping portions of the substructure, superstructure slabs, wearing surface, sidewalks, parapets, barriers, and wingwalls will be measured at randomly generated locations with a 10 foot straightedge once per 100 ft^2. Measurements beyond tolerances given in Table 5, Subsection 502.14(E) will be cause for removal or pay adjustment and potential corrective action as determined by the Resident. The Contractor shall furnish the 10 foot straightedge. At the Resident's discretion, measurements may be taken with a lightweight profiler. When the Resident uses the lightweight profiler to measure tolerance, and the International Ride Index (IRI) is between 250 and 300 inches/mile for any one placement, a pay adjustment will be made. When tolerances exceed 300 inches/mile, there will be cause for removal or a pay adjustment and potential corrective action.

B. Alignment and Trueness - Alignment and trueness may be measured by the Resident longitudinally along any vertical surface of any portion of the structure and shall not exceed a deviation of 1/4 inch in three feet for structures up to 30 feet in length. Structures in excess of 30 feet in length will be subject to a maximum tolerance of two inches. Measurements exceeding these tolerances will be cause for removal or pay adjustment and potential corrective action as determined by the Resident.

C. Plumb and Batter - The Resident will measure all columns and other vertical surfaces that will remain exposed to determine actual plumbness and batter. Measurements will be taken subsequent to every placement. Vertical faces of columns will be measured at a minimum of two faces at right angles to each other. Other vertical surfaces will be measured once every 15 feet along the face of longitudinal wall. All measurements will be made on a per placement basis and will be subject to a tolerance of 1/4 inch in 10 feet. Measurements between 1/4 inch and 1/2 inch in 10 feet will result in pay adjustments. Measurements beyond 1/2 inch in 10 feet will be cause for removal or pay adjustment and potential corrective action as determined by the Resident.

D. Finish - The Resident will measure and determine the areas to be repaired in accordance with Subsections 502.10(d), 502.13, and 502.14(e) for each placement. Areas to be repaired will be measured as a percentage of the total surface area of the placement. Those areas to be repaired that are between zero and five percent of the total surface area of the placement will result in no pay adjustments. Areas to be repaired that are between five percent and 10 percent will result in pay adjustments. Areas greater than 10 percent of the total surface area of the placement will be cause for removal or pay adjustment and corrective action as determined by the Resident.

Appropriate pay adjustments, as described in Subsection 502.194, will be made for any or all of the properties described above that do not meet Specification requirements.

502.0505 Resolution of Disputed Acceptance Test Results

The Contractor shall work cooperatively with the Resident in maintaining Control Charts in order to identify potential issues with any test results and take appropriate actions to address these issues before they become disputed issues. Circumstances may arise where the Authority's test results indicate that a material is unacceptable and removal is warranted. If the material is marginally acceptable, it may remain in place and be paid for at a reduced rate determined by the Authority. This Subsection provides recourse for the Contractor to contest the Authority's QA test results as follows, at no additional cost to the Authority:

A. Compressive Strength - The Contractor shall take appropriate corrective measures when the Resident advises the Contractor that the average of three consecutive compressive strength test results fall to less than 150 psi above the specified strength, or any single test falls more than 200 psi below the specified strength. The Contractor shall make corrective changes in materials, mix proportions, or in the concrete manufacturing procedure before additional concrete of the same class is placed.

There may be situations where there is the possibility that an underlying structural element could be built-upon before test results for the underlying element have been reported, based upon the normal frequency of testing. In these instances, it is in the Contractor's best interest to perform additional testing that will provide indications that the concrete will meet the requirements of the applicable Specifications, prior to continuing to build upon this underlying element. In the extreme case where an underlying structural element has been built-upon before test results for the underlying element have been reported, the above mentioned safeguards of tracking and additional testing have failed and the final test results for the concrete of the underlying element indicate that removal is warranted and the Contractor's QC results do not confirm the Authority's test results, the following procedure concerning compressive strength may be undertaken by the Contractor and witnessed by the Authority, within 36 days of the placement date:

1. Drilled core specimens shall be retrieved from the concrete in question in accordance with the requirements of ASTM C42/C42M, Standard Test Method for Obtaining and Testing Drilled Cores and Sawed Beams of Concrete. The core strength acceptance and evaluation criteria included in ACI 318 shall not apply.

2. Three drilled core specimens shall be taken from each sublot in question, from randomly selected locations to be representative to the entire volume of the sublot.

The Resident and the Contractor's representative shall agree on the sample locations prior to drilling. The specimens shall have a minimum diameter of four inches and a minimum length of eight inches.

3. The concrete cores shall be taken directly from the Project to the Authority's designated independent testing laboratory where they will be tested. The cores shall be protected from drying and damage during transport. The Contractor shall make arrangements with the Authority's designated independent testing laboratory for testing prior to beginning the coring process.

4. Core test results will be evaluated by the Authority with the understanding that the strength of drilled cores is, in general, 85 percent of that of corresponding standard-cured molded cylinders. Therefore, the test results of the three cored cylinders shall be averaged, and then divided by a factor of 0.85. The resulting compressive strength shall be used by the Authority in the final determination of the acceptability of the material in question and shall replace the contested test result in computing pay adjustments for the sublot in question. If coring is not done with the 36 day time limit, the Authority will not allow dispute testing of the sublot.

5. If the Authority concludes that the strength of the structural element in question is adequate as a result of the above procedure, then the concrete shall remain in place and will be paid for at a reduced rate, as determined by the Authority. If the Authority concludes that the strength of the structural element in question is unsatisfactory as a result of the above procedure, then the Authority will direct the Contractor to take appropriate actions, as determined by the Authority, and at no additional cost to the Authority.

B. Entrained Air – In order to dispute the Authority's test results, the Contractor must test material from the same sample as the Authority. If the difference between the Authority's and the Contractor's air tests is equal to or greater than 0.8 percent, then the material shall be retested by both parties. If the difference between the retests is equal to or greater than 0.8 percent, the concrete placement will be suspended immediately, and 1) both air meters shall be calibrated immediately, or 2) the Contractor shall immediately replace both air meters. Once it is demonstrated the QC and Acceptance air meters are in agreement with 0.8 percent, the concrete placement may resume.

502.06 Batching

Measuring and batching shall be performed at an approved batching plant, unless otherwise approved by the Resident. The batching plant shall meet the requirements of AASHTO M-157.

502.0701 Delivery

A. Delivery and discharge of the concrete from the mixer shall be completed within a maximum of 1-1/2-hours from the time the cement is added to the aggregate, except that in hot weather when the concrete mix temperature exceeds 70˚F or under other conditions contributing to quick stiffening of the concrete, delivery and discharge from the mixer shall be completed within one hour. When approved by the Resident, the use of a retarding admixture (Type D)

may be used for increasing the one hour discharge time to 1-1/2-hours, provided concrete temperatures are kept below 80˚F and conditions contributing to quick stiffening of the concrete are not present.

B. Concrete, which has been condemned for any reason, shall be removed immediately from the jobsite and disposed of properly.

C. Concrete temperature before placement shall not exceed 85˚F.

D. All concrete trucks must have working revolution counters, and be set to zero at the start of mixing. Any truck without a counter will be rejected from the job unless the Contractor can assure the Resident that adequate mixing has been achieved.

502.08 Cold Weather Concrete

All frost, ice, and snow shall be removed from all material that will be in contact with fresh concrete.

Unless authorized by the Resident, the mixing and placing of concrete shall be discontinued when the atmospheric temperature is below 40˚F in the shade and dropping and shall not be resumed until the atmospheric temperature is as high as 35˚F in the shade and rising. If authorization is granted for the mixing and placing of concrete under atmospheric conditions different from those specified above, the water shall be heated to a temperature not exceeding 180˚F. When either the aggregate or water is heated to above 120˚F, they are to be combined first in the mixer before the cement is added. If the atmospheric temperature is below 25˚F, the aggregate shall also be heated when approved by the Resident. Materials containing frost or lumps of frozen material shall not be used. Stockpiled aggregates may be heated by the use of dry heat or steam. Aggregates shall not be heated directly by gas or oil flame or on sheet metal over a fire. When aggregates are heated in bins, steam coil or water coil heating or other methods that will not be detrimental to the aggregates may be used. The heating apparatus shall be capable of heating the mass uniformly and preventing the occurrence of spots of overheated material. The temperature of the mixed concrete shall be between the minimum values shown in Table 4 and 70˚F when it is placed in the forms. Salt or other chemicals shall not be added to the concrete for any reason whatsoever, except by written permission of the Resident.

TABLE 4
COLD WEATHER TEMPERATURE TABLE

MINIMUM FORM DIMENSION SIZE

Less than 300 mm (12 in.)	300 – 900 mm (12 - 36 in.)	900 – 1800 mm (36 - 72 in.)	Greater than 1800 mm (72 in.)
13˚C (55˚F)	10˚C (50˚F)	7˚C (45˚F)	5˚C (40˚F)
MINIMUM CONCRETE TEMPERATURE AS PLACED			

When permitted by the Resident, footings may be protected by completely submerging them by admitting water inside the cofferdam. Until submersion takes place, the temperature of the concrete and its surface shall be controlled as specified above. Submersion shall proceed

slowly and the temperature of the air or water shall be maintained sufficient to prevent ice from forming within the cofferdam for a period of seven (7) days after the placing of the concrete.

When depositing concrete under water, there shall be no ice inside the cofferdam.

Permission given to place concrete under the conditions mentioned above shall not relieve the Contractor of responsibility for obtaining satisfactory results. The Contractor shall be wholly responsible for the protection of concrete during cold weather operations and any concrete injured by frost action or overheating shall be removed and replaced at the Contractor's expense.

502.10 Forms and False Work

A. Construction of Forms - All forms shall be well built, substantial and unyielding, securely braced, strutted and tied to present motion and distortion while concrete is being placed in them. The forms shall be strong enough to safely support the weight of the concrete and all superimposed loads (such as runways, concrete buggy loads, workers, scaffolding, etc.) placed upon them.

Forms shall be built to conform to the dimensions, location, contours and details shown on the Plans. The faces of forms against which the concrete is to be placed shall be dressed smooth and uniform and shall be free from winds, twists, buckles and other irregularities.

Stay-in-place forms of any type will not be permitted for any part of the slab structures, unless otherwise indicated on the Plans.

The placing of concrete in excavated pits and trenches without forms will be permitted only in exceptional cases and then at the discretion of the Resident.

All corners within the forms shall be fitted with chamfer strips mitered at their intersections, except that chamfer strips will not be required as follows: (1) on corners of slab blocking of interior steel beams and the inside of exterior steel beams; (2) on corners constructed transversely at the underside of the slab of superstructures which consist of a concrete slab on steel beams; (3) on footings not exposed to view; and (4) on all structures when more than two feet below the final finished ground line.

Chamfer strips shall have a width across the diagonal face between 1/2 inch and 3/4 inch. The size to be adopted for a given portion of the work shall depend upon the general dimensions. Except where special size chamfer strips are shown on the Plans, the size of chamfer strips shall be uniform on individual projects. Provisions shall be made for the chamfering of the top edges of abutment bridge seats and wing walls, tops of piers and retaining walls, tops of through girders, roadway curbs, etc., by nailing chamfer strips inside the forms. Unless otherwise provided, all chamfer strips shall produce plain flat surfaces on the concrete.

The forms for beams, girders and spandrel arches shall be so constructed as to permit the sides to be removed without disturbing the supports.

All foreign matter within the forms shall be removed before depositing concrete in them.

In all cases where metal anchorages or ties within or through the face forms are required to hold the forms in their correct position, such anchorages or ties shall be of ample strength and shall be constructed so that the metal work can be removed to a depth of not less than one inch from the face and back surfaces of the concrete without damaging such surfaces.

Elevations will be taken on the top flanges of structural steel beams and girders for the purpose of determining the depth of blocking necessary for the construction of the forms for the concrete slab, after the following conditions have been satisfied:

1. The satisfactory erection of the superstructure structural steel beams or girders, including any required flooring beams and stringers, unless an alternative plan is submitted by the Contractor and approved by the Authority.

2. All bolt tightening operations must be complete.

3. No foreign loads supported by the beams or girders are present.

The Contractor shall submit working drawings for approval of the proposed forms supporting the superstructure slabs, and of the proposed forms and false work supporting the overhanging portion of the superstructure slab in accordance with Subsection 105.7. The working drawings shall show the size, spacing and location of the supporting members, and the proposed loads and weight of the concrete forms to be carried by the members. The proposed superstructure slab form and false work systems' computations, plans, and working drawings shall be designed and sealed by the Contractor's Professional Engineer, who must be registered in the State of Maine. This Professional Engineer may be directly employed or otherwise retained by the Contractor.

In the construction of forms and false work for the portion of superstructure slabs overhanging the exterior members of beam and girder spans, forms and supporting devices resulting in point loadings on the exterior members shall not be used. Loads resulting from supporting devices shall be distributed directly to the flanges by means of brackets or braces.

All forms shall be inspected and approved by the Professional Engineer responsible for the design of the form and false work systems before the placing of any concrete within them. The Professional Engineer shall, after inspection, provide a sealed certification to the Resident that the systems were erected in conformance with the Professional Engineer's Plans and design details.

B. Surface Treatment of Forms - The inside surfaces of forms shall be uniformly coated with form oil or other approved surface treatment.

Form surfaces shall be treated before placing the reinforcing steel.

C. Construction of False Work - All false work used for supporting reinforced concrete superstructures shall be composed of members having ample structural sections to resist all loads imposed upon them, with deformations less than span length / 360.

When the vertical members of false work consist of piles or when framed or other false work is supported upon piles, the piles shall be driven to secure a safe load resistance.

When false work is supported upon mud sills, the foundation pressures resulting from the imposed loads upon the mud sills (false work, forms, fresh concrete, scaffolding, etc.) shall not exceed the capacity of the on-site soils.

All false work systems shall be designed to support all vertical loading and any differential settlement forces, all horizontal and longitudinal forces, and shall account for any temporary unbalanced loading due to the placement sequence of the concrete. Sufficient redundancy shall be designed into centering or false work systems so that the failure of any member shall not cause a collapse. Design computations, layout drawings, and details of materials for the centering or false work systems shall be submitted to the Authority for its records. The erection of centering or false work systems shall be accomplished in strict conformance with the design and details. No concrete shall be placed without prior approval of the Resident.

False work systems adjacent to and/or over traveled ways shall additionally be designed to resist any vibration forces due to traffic and shall incorporate sufficient protection against impact by errant vehicles.

All false work system computations, plans and working drawings shall be designed and sealed by the Contractor's Professional Engineer, who must be registered in the State of Maine. This Professional Engineer may be directly employed or otherwise retained, by the Contractor. Prior to concrete placement, the Professional Engineer responsible for the design of the false work system shall, after false work inspection, provide a sealed certification to the Resident that the system was erected in conformance with the Professional Engineer's Plans and design details.

False work shall be so constructed that the forms will have a camber, the amount depending upon the deflection anticipated in the design.

Forms supported upon false work shall be provided with a satisfactory means for their adjustment in the event of settlement or deformation of the false work due to overloading or other causes.

Provisions shall be made for the gradual lowering of false work and rendering the supported structure self-supporting.

D. Removal of Forms and False Work

1. Location, weather conditions, cementitious materials used and the character of the structure involved shall be considered in determining the time for the removal of forms and false work. Forms and false work shall not be removed until concrete cylinders cured with the structure establish that the concrete has developed 80 percent of design strength. The Contractor shall cast and break two cylinders per sublot and furnish the Resident with these test reports before removal of the forms and false work.

   When approved by the Resident, the vertical forms of footings, walls, columns and sides of beams and slabs may be removed 48-hours after completion of placement

of concrete, exclusive of the time the ambient air temperature is below 45˚F and provided the following conditions are met:

Immediately after the forms are removed, defects in the concrete surface shall be repaired in accordance with Subsection 502.13 and the repaired area thoroughly dampened with water. The surfaces of exposed concrete shall be cured for the remainder of the seven day curing period by the application of a product listed on the Maine Department of Transportation Prequalified list of curing compounds. The curing compound shall be applied continuously by an approved pressure spraying or distributing equipment at a rate necessary to obtain an even, continuous membrane, meeting the manufacturer's recommendation but at a rate of not less than 1 gal/200 ft^2 of surface. Other methods of curing concrete may be used with the prior approval of the Resident.

2. Forms and false work, including blocks and bracing, shall not be removed without the consent of the Resident. The Resident's consent shall not relieve the Contractor of responsibility for the safety of the work. In no case shall any portion of the wood forms be left in the concrete. As the forms are removed, all projecting metal devices that have been used for holding the forms in place shall be removed in accordance with Subsection 502.10. The holes shall be filled as required in Subsection 502.13.

502.11 Placing Concrete

A. General – Concrete shall not be placed until forms and reinforcing steel have been checked and approved by the Resident. The forms shall be clean of all debris. The method and sequence of placing the concrete shall be approved before any concrete is placed.

All concrete shall be placed before it has taken its initial set and, in any case, as specified in Subsection 502.0701. Concrete shall be placed in horizontal layers in such a manner as to avoid separation and segregation. A sufficient number of workers for the proper handling, tamping and operation of vibrators shall be provided to compact each layer before the succeeding layer is placed and to prevent the formation of cold joints between layers. Care shall be taken to prevent mortar from spattering on structural steel, reinforcing steel and forms. Any concrete or mortar that becomes dried on the structural steel, reinforcing steel or forms shall be thoroughly cleaned off before the final covering with concrete. Following the placing of the concrete, all exposed surfaces shall be thoroughly cleaned as required, with care not to injure any surfaces.

Concrete shall not come in direct contact with seawater during placing and for a period of 72- hours thereafter, except as follows:

1. Concrete seals that are located entirely below low tide.

2. Concrete footings constructed in the dry and located entirely below low tide or final ground elevation.

3. Concrete Fill placed under water.

Concrete in any section of a structure shall be placed in approximately horizontal layers of such thickness that the entire surface shall be covered by a succeeding layer before the underlying layer has taken its initial set. Layers shall not exceed 18 inches in thickness and be compacted to become an integral part of the layer below. Should the placement be unavoidably delayed long enough to allow the underlying layer to take initial set or produce a so-called "cold joint", the following steps shall be taken:

- An incomplete horizontal layer shall be bulk headed-off to produce a vertical joint.
- Horizontal joints shall be treated as required in this Subsection 502.11(F).
- Portland Cement concrete with a high range, water reducing admixture shall not be placed when the concrete mix temperature is below 40˚F or above 85˚F.

The concrete in superstructures shall be placed monolithically except when construction joints are shown on the Plans or are authorized in accordance with approved details submitted by the Contractor. If the concrete in the stems of T-beams is to be placed independent of the slab section, the construction joint shall be located at the underside of the slab and the bond between stem and slab shall be a mechanical one. The bond shall be produced by embedding two *x* four, four inch wooden blocks having a length approximately four inches less than the width of the stem and placed horizontally at right angles to the centerline of the beam in the top surface of the concrete immediately following the completion of the concrete placement. To provide for the uniform spacing of the blocks and their ready removal when the concrete has taken a set sufficient to hold its form, the blocks shall be firmly nailed upon a board at a distance of one foot center to center. The blocks shall be thoroughly oiled to facilitate their ready removal from the concrete.

In arch spans, the order of construction or sequence of the work, as shown on the Plans shall be followed in the placing of concrete.

In no case shall the work on any section or layer be stopped or temporarily discontinued within 18 inches below the top of any face, unless the Plans provide for a coping having a thickness less than 18 inches in which case, at the option of the Resident, the construction joint may be made at the underside of the coping. Concrete in columns shall be placed in one continuous operation, unless otherwise directed.

Fresh concrete, threatened with rain damage shall be protected by approved means. Sufficient material for covering the work expected to be done in one day shall be on hand at all times for emergency use. The covering shall be supported above the surface of the concrete.

Concrete Fill shall be placed at least to the pay limits shown on the Plans. Forms may be omitted at the Contractor's option. Vibration of concrete will not be required. The Contractor has the option of placing concrete fill under water or in the dry.

B. Chutes, Troughs, Pipes and Buckets - Sectional drop chutes or short chutes, troughs, pipes and buckets when used as aids in placing concrete, shall be arranged and used in such a manner that the ingredients of the concrete do not become separated or segregated. Wood and aluminum chutes, troughs, pipes or buckets shall not be used.

Dropping the concrete a distance of more than six feet, unless confined by closed chutes or pipe will not be permitted. The concrete shall be deposited at or as near as possible to its final position.

C. Vibrating - Mechanical, high frequency internal vibrators shall be used, operating within the concrete, for compacting the concrete in all structures and precast and cast-in-place piles, with the exception of concrete placed under water. The vibrators shall be an approved type with a frequency of 5,000 to 10,000 cycles per minute and shall be visibly capable of properly consolidating the designed mixture. A spare vibrator shall be available on the Project at all times during the placing of concrete.

Sufficient vibrators shall be used to consolidate the incoming concrete within five (5) minutes after placing. Vibrators shall neither be held against forms or reinforcing steel, nor shall they be used for flowing the concrete or spreading it into place. Over-vibrating shall not be allowed.

D. Dewatering Forms - All forms shall be dewatered before concrete is placed in them. Pumping will not be permitted from the inside of forms while concrete is being placed. Moving water shall not be permitted to be exposed to fresh concrete.

E. Depositing Concrete Under Water - No concrete shall be deposited under water except for cofferdam seals. Pumping will not be allowed within the cofferdam while concrete is being placed.

Seal concrete shall be placed carefully in a compact mass in its final position by means of a tremie or by other approved means and shall not be disturbed after being deposited. Bottom dump buckets will not be permitted. Special care must be exercised to maintain still water at the point of deposit. Seal concrete shall not be placed in running water. The method of depositing concrete shall be so regulated as to produce approximate horizontal surfaces. Each seal shall be placed in one continuous operation.

When a tremie is used, it shall consist of a tube not less than 10 inches in diameter. The means of supporting the tremie shall be such as to permit free movement of the discharge end over the entire seal and to permit its being lowered rapidly, when necessary to choke-off or retard flow. The tremie shall be filled by a method that will prevent washing of the concrete. The discharge end shall be completely submerged in concrete at all times and the tremie tube shall be kept full to the bottom of the hopper. The flow shall be regulated by raising or lowering the tremie.

When the horizontal area of the tremie seal is large, several tremie hoppers shall be provided and positioned strategically to allow easy deposit of concrete near the point where it is needed to avoid moving concrete horizontally through the water. The number of tremie hoppers and the work plan shall be approved by the Resident.

All laitance or other unsatisfactory material shall be removed from the surface of the seal before placing additional concrete. The surface shall be cleaned by scraping, chipping or other means that will not injure the concrete.

The placing and dewatering of seal concrete within cofferdams shall be in accordance with Section 511, Cofferdams.

F. Construction Joints - Construction joints shall be located where shown on the Plans or permitted by the Resident. When the concrete is in seawater, except concrete cores for stone masonry, no horizontal construction joint will be permitted between extreme low tide and extreme high tide elevations.

At horizontal construction joints, temporary gage strips having a minimum thickness of 1-1/2 inches shall be placed horizontally inside the forms along all exposed faces to give the joints straight lines. The joint shall be so constructed that the surface of the concrete will not be less than 1/4 inch above the bottom of the gage strip. Before placing fresh concrete, the temporary gage strip shall be removed, the surfaces of construction joints shall be thoroughly cleaned, drenched with water until saturated and kept saturated until the new concrete is placed. Immediately prior to placing new concrete, the forms shall be drawn tight against the concrete already in place. Concrete in substructures shall be placed in such a manner that all horizontal joints will be horizontal and if possible, in locations such that they will not be exposed to view in the finished structure.

Where vertical construction joints are necessary, reinforcing bars shall extend across the joint in such a manner as to make the structure monolithic. Construction joints through paneled wing walls or other large surfaces which are to be treated architecturally will not be allowed except as shown on the Plans. All vertical construction joints in abutments and retaining walls shall contain water stops as shown on the Plans. The water stops shall be one continuous piece at each location.

All horizontal construction joints in abutments and retaining walls shall be constructed using a joint cover, as shown on the Plans.

Construction joints in the wearing surface shall be located where called for on the Plans. No other construction joints will be allowed.

All joints shall be formed in the manner detailed on the Plans. The forms shall not be treated with oil or any other bond breaking material that will adhere to the concrete.

Sealing slots shall be provided at all joints in the wearing surface that are located directly over a slab construction joint.

Construction joints in the wearing surface not receiving a sealing slot shall be brushed with a neat cement paste immediately prior to making the adjacent concrete placement.

After the concrete has been cured, sealing slots, when required, shall be sandblasted with approved equipment to remove all laitance and foreign material on the surfaces of the slots. The bottom of the sealing slots shall receive an approved bond breaker. The joint shall then be filled within 1/8 inch of the surface with a poured sealant conforming to the following requirements and in accordance with the manufacturer's recommendations. The joint sealant supplied shall be an approved two component, elastomeric sealant capable of 50 percent joint movement. Both components shall be in liquid form and the combining ratio of components by volume shall be as recommended by the manufacturer.

G. Concrete Wearing Surface and Structural Concrete Slabs on Precast Superstructures

When called for on the Plans, a separate concrete wearing surface or structural concrete slabs on precast superstructures shall be bonded to the supporting slab. No surface preparation of a new structural concrete slab shall begin before completion of the specified curing period.

When the supporting slab is composed of cast-in-place concrete, the Contractor shall scabble the entire surface of the structural concrete slab and then sandblast the entire structural concrete slab surface. When the supporting slab is comprised of precast units, the Contractor shall sandblast the entire deck surface.

The entire area of the deck surface and the faces of curb and barrier walls or other median devices, up to a height of one inch above the top elevation of the wearing surface or slab, shall be cleaned to a bright, clean appearance which is free from curing compound, laitance, dust, dirt, oil, grease, bituminous material, paint and all other foreign matter. Air lines shall be equipped with effective oil traps. The cleaning of an area of the deck shall be performed within the 24-hour period preceding placement of the wearing surface. The cleaning shall be performed by dry sand blasting or other methods approved by the Resident. All debris from the cleaning operation shall be thoroughly removed by compressed dry air from the cleaned surfaces and adjacent areas. The cleaned areas shall be protected against contamination before placement of the wearing surface. Contaminated areas shall be recleaned by dry sand blasting. Prepared, areas that have not received the wearing surface within 36-hours shall be recleaned.

All horizontal surfaces in contact with the wearing surface shall receive a coating of bonding grout or bonding agent listed on Maine Department of Transportation Prequalified List of Bonding Agents. The vertical faces in contact with the wearing surface shall be broomed-up to the elevation of the top of the wearing surface with bonding grout or an approved bonding agent.

Stiff bristled street brooms shall be used to brush the grout onto the surface. The coating shall not exceed 1/8 inch in thickness. The rate of progress in applying grout shall be limited so the grout does not become dry before it is covered with new concrete. During delays in the surfacing operations, should the surface of the grout indicate an extensive amount of drying, the grout shall be removed by methods approved by the Resident and the area should be regrouted.

The bonding grout shall have Portland Cement and fine aggregate proportioned 2 to 1 by volume. The fine aggregate from which the material larger than 1/8 inch has been removed shall be the same source as used in the concrete. The cement and fine aggregate shall be measured separately in appropriately sized containers. The fine aggregate shall be deposited in an approved mechanical mortar mixer before adding cement. Water shall be added in sufficient quantity to allow flow of the grout without segregation of the grout ingredients.

No water shall be added after initial mixing. The grout shall not be allowed to separate before placement. The cement to water contact time of the grout shall not exceed 30 minutes before it is placed. Any grout that has dried or become unworkable before application, as determined by the Resident, shall not be incorporated into the work. The use of retarding admixtures for increasing the discharge time limits will be allowed.

The Resident may approve the batching of bonding grout at an approved commercial concrete batch plant. In this case, mixing and delivery shall be in transit truck mixers. The

bonding agent shall be one of the products listed on the Maine Department of Transportation's List of Prequalified Bonding Agents and shall be applied in accordance with the manufacturer's recommendations.

No structural concrete slab structure, including but not necessarily limited to, concrete deck slabs, wearing surfaces, simple slab spans and slabs on precast superstructures, shall be commenced if the combination of ambient air temperature, relative humidity, wind speed, and plastic concrete temperature result in a surface moisture evaporation rate theoretically equal to or greater than 0.1 lb/ft^2/hr. of exposed surface (refer to the Rate of Evaporation from Concrete Surface Chart). If the surface moisture evaporation rate rises to 0.15 lb/ft^2/hr. of exposed surface, the Contractor shall immediately implement remedial actions to reduce the surface moisture evaporation rate. The temperature of the concrete shall not exceed 75˚F at the time the concrete is placed in its final position. The maximum temperature of the surface on which concrete will be placed shall be 90˚F. The Contractor shall provide all equipment and perform all measurements and calculations in the presence of the Resident to determine the rate of evaporation.

RATE OF EVAPORATION FROM CONCRETE SURFACE NOMOGRAPH

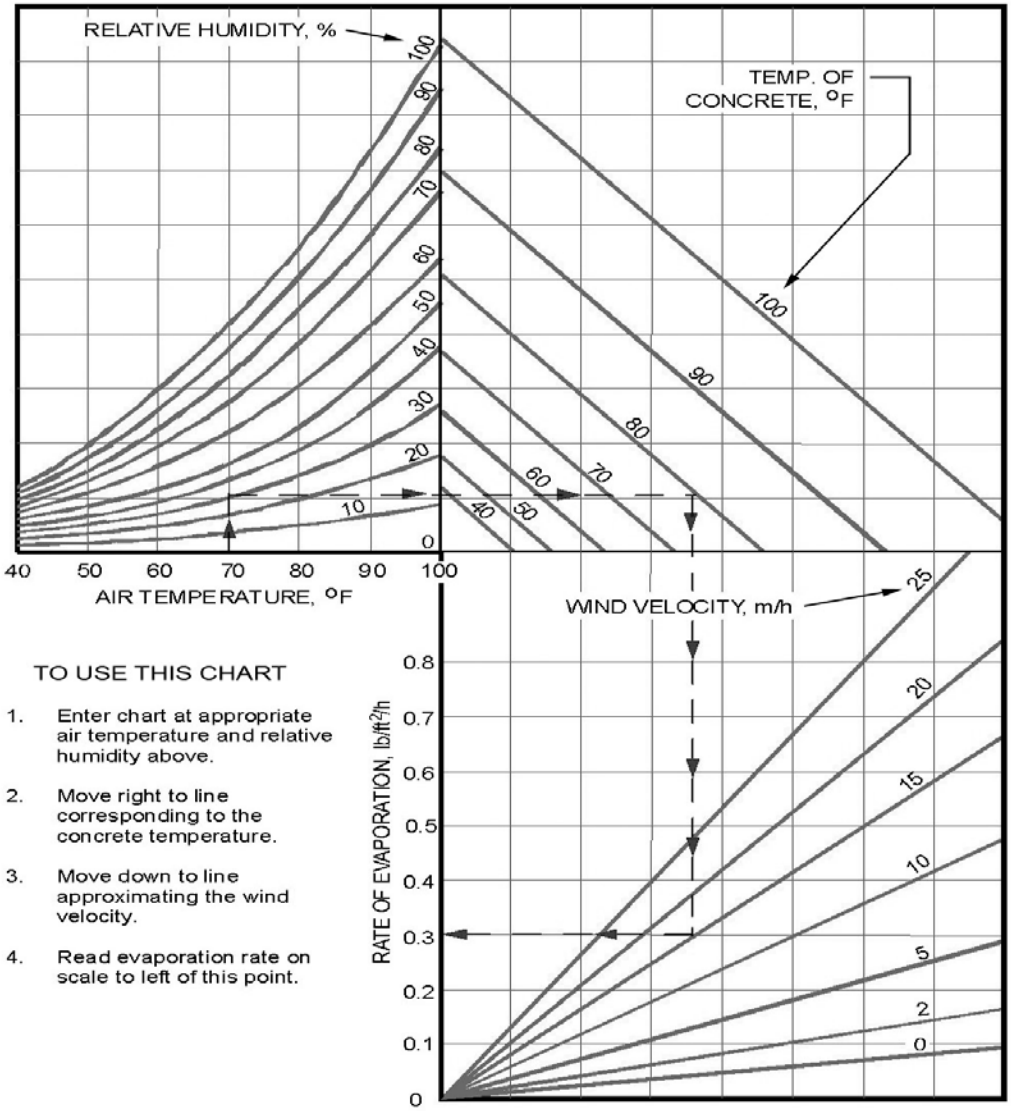

502.12 Expansion and Contraction Joints

Expansion and contraction joints shall be located and constructed or sawn as shown on the Plans and within the timeline allotted. Water stops shall be one continuous piece at each location. Joint cover, as shown on the Plans, shall be applied to all joints where water stops cannot physically be installed, as determined by the Resident.

502.13 Repairing Defects and Filling Form Tie Holes in Concrete Surfaces

After the forms are removed, all surface defects and holes left by the form ties shall be repaired.

All fins and irregular projections shall be removed from the following: Surfaces which are visible in the completed work; surfaces to be waterproofed; and the portion of vertical surfaces of substructure units which is below the final ground surface to a depth of 12 inches, not including underwater surfaces.

In patching surface defects, all coarse or fractured material shall be chipped away until a dense uniform surface, exposing solid coarse aggregate is obtained. Feathered edges shall be sawcut away to form faces having a minimum depth of one inch perpendicular to the surface. All surfaces of the cavity shall be saturated thoroughly with water, after which a thin layer of neat cement paste shall be applied. The cavity shall then be filled with thick, reasonably stiff mortar, not more than 30 minutes old, composed of material of the same type and quality and of the same proportions as that used in the concrete being repaired. The surface of this mortar shall be floated before initial set takes place and shall be neat in appearance. The patch shall be water cured for a period of five (5) days.

If the removal of defective concrete materially impairs the soundness or strength of the structure, as determined by the Resident, the affected unit shall be removed and replaced by the Contractor at their expense.

The holes left by form ties, on the portions of substructure concrete that are to be permanently covered in the finished work, may be filled with an acceptable grade of plastic roofing cement. Holes in the bottom of slabs caused by supporting hangers need not be filled with the exception of voids that expose the top side of a girder top flange. Where holes in the deck or haunch are required to be filled, this work shall be completed using an approved high performance elastomeric sealant.

502.14 Finishing Concrete Surfaces

Neat cement paste, dry cement powder or the use of mortar for topping or plastering of concrete surfaces will not be permitted.

A. Float Finish - A float finish for horizontal surfaces shall be achieved by placing an excess of concrete in the form and removing or striking-off the excess with a template or screed, forcing the coarse aggregate below the surface. Creation of concave surfaces shall be avoided. After the concrete has been struck-off, the surface shall be thoroughly floated to the finished grade with a suitable floating tool. Aluminum and steel floats are not allowed.

Float finish, unless otherwise required, shall be given to all horizontal surfaces except those intended to carry vehicular traffic and those of curbs and sidewalks.

B. Structural Concrete Slab Structures – Include, but not limited to, structural concrete deck slabs, wearing surfaces, slabs on precast superstructures, top and bottom slabs of box culverts, approach slabs, rigid frame structures and simple slab spans, as applicable. Screed rails shall be set entirely above the finished surface of the concrete and shall be supported in a manner approved by the Resident. Where shear connector studs are available, welding to the studs will be permitted. No welding will be permitted directly on the stringer flanges to attach either screed rail supports or form supports of any type.

Screed rail supports set in the concrete shall be so designed that they may be removed to at least 50 mm [2 inches] below the surface of the concrete. Voids created by removal of the upper part of the screed rail supports shall be filled with mortar having the same proportions of sand and cement as that of the slab or wearing surface. The mortar shall contain an approved additive in sufficient proportions to produce non-shrink or slightly expansive characteristics.

The rate of placing concrete shall be limited to that which can be finished without undue delay and shall not be placed more than 10 feet ahead of strike-off.

The Contractor shall furnish a minimum of two work bridges behind the finishing operation, capable of spanning the entire width of the deck and supporting at least a 500 lb. load without deflection to the concrete surface, to be supported on the screed rails. These working bridges shall be used by the Contractor for touch-up and curing cover application and shall be available for inspection purposes. When the overall length of the structure is 60 feet or less only one working bridge will be required.

An approved bridge deck finishing machine complying with the following requirements shall be used, except as otherwise specified, for finishing structural concrete slab structures. The finishing machine shall have the necessary adjustments, built in by the manufacturer, to produce the required cross section, line and grade. The supporting frame shall span the section being cast in a transverse direction without intermediate support. The finishing machine shall be self-propelled and capable of forward and reverse movement under positive control. Provisions shall be made for raising all screeds to clear the screeded surface for traveling in reverse. The screed device shall be provided with positive control of the vertical position.

The finishing machine shall be self-propelled with one or more oscillating screeds or one or more rotating cylinder screeds. An oscillating screed shall oscillate in a direction parallel to the centerline of the structure and travel in a transverse direction. A rotating cylinder screed shall rotate in a transverse direction while also traveling in the same direction. Either type of screed shall be operated transversely in overlapping strips in the longitudinal direction not to exceed six inches. One or more powered augers shall be operated in advance of the screed(s) and a drag (pan type) float shall follow the screed(s). For concrete placements less than six (6) inches in depth, vibratory pan(s) having a minimum of 3000 vibrations/min shall be operated between the oscillating screed(s) or rotating cylinder screed(s) and the power auger(s). For concrete placed in excess of 3-1/2 inches but less than six (6) inches in thickness, hand- operated spud vibrators shall be used in addition to the machine vibratory pan(s).

The transversely operated rotating cylinder(s) of the bridge deck finishing machine shall be rotated such that the direction of the rotation of the cylinder(s) at the surface of the concrete is in accordance with the manufacturer's recommendations.

Concrete immediately in front of the power auger(s) of a bridge deck finishing machine shall be placed or cut to a depth no higher than the center of the rotating auger(s). The advance auger(s) shall strike-off the concrete to approximately 1/4 inch above the final grade. The concrete shall then be consolidated with the vibrating pan(s) and then finished to final grade.

A small handheld pan vibrator shall be required at edges and adjacent to joint bulkheads. In lieu of the handheld pan vibrator equipment, the Resident may approve small spud vibrator(s).

Lightweight, vibrating screeds may be used on slab structures which are more than 12 inches below the roadway finish grade or have a length of 30 feet or less, or where concrete placements are specified to be less than 16 feet in width and shall have the following features:

1. It shall be portable and easily moved, relocated, or adjusted by no more than four persons.
2. The power unit shall be operable without disturbing the screeded concrete.
3. It shall be self-propelled with controls that will allow a uniform rate of travel and by which the rate of travel can be increased, decreased or stopped.
4. It shall have controlled, uniform, variable frequency vibration, end to end.
5. It shall be fully adjustable for flats, crowns, or valleys.
6. The screed length shall be adjustable to accommodate the available work area.

When a lightweight vibrating screed is utilized, the concrete shall be placed or cut to no more than 1/2 inch above the finished grade in front of the front screed. The screed shall be operated such that at least three feet of concrete is in position in front of the screed.

Supporting slabs for bituminous wearing surfaces shall be finished in accordance with the recommendations of the waterproofing membrane manufacturer.

The texturing of concrete wearing surfaces shall be applied as approved by the Resident. The surface tolerance and texture shall be acceptable to the Resident, or the placement may be suspended until remedial action has been taken. The Resident may order the removal and replacement of material damaged by rainfall.

On all concrete wearing surfaces, a one foot wide margin shall be finished adjacent to curbs and permanent barriers with a magnesium float.

Immediately after screeding, floating and texturing, the surface of the concrete shall be tested for trueness, by the Contractor, with a 10 foot straightedge and all irregularities corrected at once in order to provide a final surface within the tolerance required in Table 5. The surface shall be checked both transversely and longitudinally. Any area that requires finishing to correct surface irregularities shall be retextured.

The straightedges shall be furnished and maintained by the Contractor. They shall be fitted with a handle and all parts shall be made of aluminum or other lightweight metal. The straightedges shall be made available for use by the Resident when requested.

In the event of a delay during a concrete placement, all concrete that cannot receive the final curing cover shall be covered with wet burlap.

No vehicles will be allowed, either directly or indirectly, on reinforcing steel before concrete placement.

C. Curb and Sidewalk Finish on Bridges - Curb and sidewalk finish is a float finish produced by using a short float moved in small circles to produce a shell-like pattern on the surface of the concrete. Alternately, sidewalks may receive a light broom finish perpendicular to the sidewalk.

When a concrete curb is monolithic with a sidewalk, a six inch wide smooth margin shall be made along the top of the curb with a magnesium float.

Unless shown on the Plans, the sidewalk area shall not be divided into sections by transverse grooves.

At all transverse construction and expansion joints, except where steel expansion dams are used, the edges of the joints, on the surface of the sidewalk, shall be finished with a sidewalk edging tool two inches in width with a 1/4 inch radius lip.

D. Form Surface Finish - The character of the materials used and the care with which forms are constructed and concrete placed shall be considered in determining the amount of rubbing required. If using first class form material, well-constructed forms and the exercise of special care, concrete surfaces are obtained that are satisfactory to the Resident, the Contractor may be relieved in part from the requirement of rubbing.

1. Ordinary Finish - An Ordinary Finish is defined as the finish left on a surface after the removal of the forms, the filling of all holes and the repairing of all defects. The surface shall be true and even, free from stone pockets and depressions or projections and of uniform texture. All formed concrete surfaces shall be given an ordinary finish unless otherwise specified.

   Repaired areas that do not meet the above requirements or areas that cannot be satisfactorily repaired to meet the requirements for ordinary finish shall be given a rubbed finish. When a rubbed finish is required on any part of a surface, the entire surface shall be given a rubbed finish.

2. Rubbed Finish - Rubbing of the concrete shall occur within seven days of the concrete placement. If rubbing of the concrete is not complete within seven days, the Contractor must apply a latex bonding agent to the concrete as submitted and approved by the Resident.

   The concrete shall be thoroughly saturated with water immediately before starting this work. Sufficient time shall have elapsed before wetting-down to allow the mortar used in ordinary finish to become thoroughly set. Surfaces to be finished shall be rubbed with a medium coarse carborundum stone, using a small amount of mortar on its face. The mortar shall be composed of cement and fine sand mixed in

proportions as used in the concrete being finished. Rubbing shall be continued until all form marks, projections and irregularities have been removed, all voids filled and a uniform surface has been obtained. A thin layer of paste produced by this rubbing shall be left on the surfaces.

After all concrete above the surface being treated has been cast, the final finish shall be obtained by a second rubbing with a fine carborundum stone using only water. This rubbing shall be continued until the entire surface is of a smooth texture and uniform color.

After the final rubbing is completed and the surface has dried, it shall be rubbed lightly with clean and dry burlap to remove excess loose powder and shall be left free from all unsound patches, paste, powder and objectionable marks. This finish shall result in a surface of smooth texture and uniform color.

No surface finishing shall be done in freezing weather or when the concrete contains frost. In cold weather the preliminary rubbing necessary to remove the inert sand and cement materials and the surface irregularities may be done without the application of water to the concrete surfaces.

The following portions of concrete roadway grade separation structures shall be given a rubbed finish unless otherwise indicated in the Contract:

(a) Retaining walls and the breast and wing walls of abutments - face surfaces to 12 inches below the finished ground line.
(b) Piers - all vertical surfaces and the underside of overhanging portions of caps, except that for overpass structures, the piers beyond the outside limits of the roadway pavement, the vertical surfaces on the back which are not visible from the roadway or sidewalk will not require a rubbed finish.
(c) Parapets and end posts – all horizontal and face surfaces, excluding overhead surfaces, to 12 inches below the finish ground.

If, in the opinion of the Resident, the general appearance of a concrete structure, due to the excellence of workmanship, cannot be improved by a rubbed finish, this requirement may be waived.

E. Surface Finish - After the concrete has cured, the surface shall be tested with a 10 foot straightedge or a lightweight profiler.

The straightedge shall be furnished and maintained by the Contractor. It shall be fitted with a handle and all parts shall be made of aluminum or other lightweight metal. The straightedges shall be made available for use by the Resident when requested. The lightweight profiler will be furnished by the Authority.

Areas found to not comply with the tolerance of Table 5 shall be brought into conformity by methods proposed by the Contractor and approved by the Resident at no additional cost to the Authority.

TABLE 5
SURFACE TOLERANCE LIMITS

Type of Surface:	* Maximum deviation of surface in millimeters [in.] below 3 m [10 ft.] straightedge
Concrete Wearing Surface, Curbs, Sidewalks, and Barriers	3 mm [1/8 in.]
Concrete Slab Surfaces to be Covered by Membrane Waterproofing or Concrete Wearing Surfaces	6 mm [1/4 in]
Concrete Slab Surfaces with Integral Concrete Wearing Surface	6 mm [1/4 in.]
Concrete Slab Surfaces to be Covered By Earth or Gravel	10 mm [3/8 in.]
Concrete Surface of Box Culvert Bottom Slab	10 mm [3/8 in.]
Concrete Surface of Abutments, Piers, Pier Shafts, Footings, and Walls	10 mm [3/8 in.]

* Allowance shall be made for crown, camber and vertical curve.

502.15 Curing Concrete

All concrete surfaces shall be kept wet with clean, fresh water for a curing period of at least seven (7) days after concrete placing, with the exception of vertical surfaces as provided for in Subsection 501.10(D), Removal of Forms and False Work.

For concrete wearing surfaces and all concrete containing fly ash or slag, the temperature of the concrete shall be kept above 50˚F for the entire seven day period. All other concrete and its surfaces shall be kept above 50˚F for the first four days of the curing period and above 32˚F for the remainder of the period.

In the 24-hours following the end of the curing period, the temperature of the concrete shall be decreased on a gradual basis, not to exceed a total change of 40˚F for moderate sections, such as abutments and pier bents, and 30˚F for mass sections such as massive piers.

All slabs and wearing surfaces shall be water cured only and kept continuously wet for the entire curing period by covering with one of the following systems:

A. Two (2) layers of wet burlap;

B. Two (2) layers of wet cotton mats;

C. One (1) layer of wet burlap and either a polyethylene sheet or a polyethylene coated burlap blanket; or,

D. One (1) layer of wet cotton mats and either a polyethylene sheet or a polyethylene coated burlap blanket.

Except as otherwise specified, curing protection for slabs and wearing surfaces shall be applied within 30 minutes after the concrete is screeded and before the surface of the concrete

has lost its surface “wetness” or “sheen” appearance. The first layer of either the burlap or the cotton mats shall be wet and shall be applied as soon as it is possible. Polyethylene sheets shall not be placed directly on the concrete, but may be placed over the fabric cover to prevent drying.

The covering of concrete wearing surfaces, decks, curbs and sidewalks shall be kept continuously wet for the entire curing period by the use of a continuous wetting system and shall be located to insure a completely wet concrete surface for the entire curing period.

All other surfaces, if not protected by forms, shall be kept thoroughly wet either by sprinkling or by the use of wet burlap, cotton mats or other suitable fabric until the end of the curing period, except as provided for in 502.10(D), Removal of Forms and False Work. Polyethylene sheets shall not be placed directly on the concrete, but may be placed over the fabric cover to prevent drying.

Surfaces of all concrete placements containing silica fume additive shall be coated with an approved evaporation retardant immediately after finishing and texturing the concrete surface. The application of wet burlap or wet cotton mats shall be made within 15 minutes after the finishing of the concrete surface.

The application rate, the desired equipment, and the mixing and application procedures for an approved evaporation retardant shall be as designated by the manufacturer. Successive applications or heavier applications of this evaporation retardant shall be applied as necessary to retain the required surface “wetness” appearance.

502.16 Loading Structures and Opening to Traffic

No superstructure concentrated loads such as structural steel beams, girders and trusses shall be placed upon finished concrete substructures until the concrete has reached its design strength.

No load or work will be permitted on concrete superstructure slabs or rigid frame structures until concrete cylinders cured with the slab establish that design strength has been reached. However, after a shorter period of time, the Resident may permit handwork for form construction and setting stone bridge curb. No curbing or other materials shall be stored on the bridge during the seven day curing period, except that if handwork is permitted, curb stones may be stored in a line near to their final location until ready to be set.

Neither traffic nor fill material shall be allowed on superstructures of concrete bridges or culverts until concrete cylinders cured with the slab establish that design strength has been reached, dependent upon conditions as specified in Subsection 502.10 and with the approval of the Resident.

No traffic will be allowed on the cured concrete of a concrete wearing surface until 24-hours after the completion of the application of protective coating for concrete surfaces.

Concrete approach slabs at the end of structures may be opened to traffic or backfilled if buried when the design strength has been reached.

502.17 Bridge Drains and Incidental Drainage

All drains shall be accurately placed at the locations shown on the Plans or as approved by the Resident, and an adequate means provided for securely holding them in the required positions during the placing of concrete.

Bridge drains shall be galvanized in accordance with Subsection 711.04, Bridge Drains. The Contractor shall furnish an insulator between surfaces of galvanized and weathering steels when erecting the bridge drain support assembly. Epoxy-coated washers shall be used when the support assembly attaches to weathering steel beam webs.

Drains or weep holes through abutments and retaining walls shall be pipe of the size and shape shown on the Plans and shall be of Schedule 40 PVC pipe.

For the purpose of providing drainage for any moisture that may collect between the floor slab and the bituminous concrete roadway surface, approved one inch inside diameter plastic tube drains shall be installed at the low points of the slab surface, adjacent to the end dam or dams. The exact location will be determined in the field by the Resident and the discharge from them shall be such as to clear the bridge seats and any other portion of the structure in their proximity. The tops of the drains shall be depressed 3/8 inch below the surface of the slab and the outlets shall project two inches below the underside of the slab. Care shall be exercised such that the drains are open after the installation of the membrane waterproofing, when it is installed.

502.175 Miscellaneous Construction of Conduits and Anchor Bolts

All conduit materials and installation procedures shall follow the requirements of Section 626.03 through 626.033 of the MaineDOT Standard Specifications.

Before placing concrete, the required elbows of entrance conduits, reinforcement, and anchor bolts shall be carefully positioned. The anchor bolt size and the bolt circle diameter shall be determined from data furnished by the supplier of the poles or as shown on the Plans. Anchor bolts for use with breakaway couplings, longitudinally grooved-type, shall be 1 inch diameter and shall project between 2-1/2 and 3 inches above the top of the foundation. All other anchor bolts shall be a minimum of one inch diameter and shall project sufficiently to accommodate the thickness of the base plus all nuts and washers. The bolt length shall also be sufficient to allow clearances of approximately 1/2 inch below the leveling nut and 1/4 inch above the top nut. At least two threads on each anchor bolt shall project beyond the outside of the nuts holding the plumbed pole.

When the anchor bolt template is removed, the threads of the anchor bolts shall be greased and protected with a metal sleeve, held in position with nuts and washers to be furnished with the bolts. This thread protection shall remain in place until the pole or other equipment is installed.

A copper-clad steel ground rod shall be installed when shown on the Plans.

502.18 Method of Measurement

Structural concrete satisfactorily placed and accepted will be measured by the cubic yard, in accordance with the dimensions shown on the Plans or authorized changes in the Plans.

Structural Concrete for any irregular shapes may be measured by the cubic yard as determined from the theoretical yield of the design mix or in the case of transit mixed concrete, by delivery ticket as approved by the Resident.

The limits to be used in determining the quantities of the aforementioned structural concrete items will be as follows:

1. Structural Concrete, Space Frame Pedestals. The limits will be the space frame pedestals from the top of the spread footing column_to the top of the pedestal (match barrier elevation).
2. Structural Concrete, Space Frame Foundations. The limits will be the space frame foundations from the bottom of the pedestal to the bottom of the spread footing.
3. Structural Concrete, Canopy Column Foundations, The limits will be the column foundation from the bottom of the spread footing to the top of the footing column (bottom of plaza island concrete).
4. Structural Concrete, Pavement Slabs. The limits will be the entire ORT slab bounded transversely and longitudinally by the extreme ends.
5. Structural Concrete, Pavement Slabs The limits will be the entire ORT slab bounded transversely and longitudinally by the extreme ends or edges of existing concrete.
6. Structural Concrete, Plaza Island, Bumpers and Curtain Walls. The limits will be the entire concrete island, outside to outside, both transversely and longitudinally, exclusive of curbing and space frame pedestals. Concrete bumpers and curtain walls placed atop the plaza islands, are included in this item. As is the infill concrete against the barrier. Curtains walls included the concrete walls at the base of the toll booths, as well as the above ground enclosure at the southern stairwell.

No deduction will be made for the volume of concrete displaced by structural steel, reinforcing steel, pile heads, expansion joint material, drains, chamfers on corners, inset panels of 1-1/2 inches or less in depth, pipes, weep holes and authorized openings for utilities of 1/4 yd^3 or less in volume, when any of these items occur in structural concrete which is to be paid for on a cubic yard basis.

502.19 Basis of Payment

The accepted work done under structural concrete, of the classes and for the types of work required, will be paid for at the Contract unit price per cubic yard for the respective Contract items involved. Payment for miscellaneous construction items such as asphalt for painting or covering various types of joints, all required sandblasting, bonding, curing, joint sealing, and joint sawing shall be incidental to the respective 502 pay items. No direct payment will be made for concrete admixtures with the exception of Synthetic Fiber Reinforcement, which shall be paid for under its respective Pay Item, 503.90.

Steel reinforcing and GFRP reinforcing will be measured and paid for separately as outlined in Section 503.

The procurement and installation of the electric conduit and anchorages placed within the Space Frame Pedestals will not be measured separately for payment, but shall be incidental to the Structural Concrete, Space Frame Pedestal pay item.

Implementation of the Quality Control Requirements and costs associated with acceptance test sampling shall be incidental to relative pay item.

Payment will be made under:

Pay Item		Pay Unit
502.231	Structural Concrete, Space Frame Pedestals	Cubic Yard
502.232	Structural Concrete, Space Frame Foundations	Cubic Yard
502.233	Structural Concrete, Canopy Column Foundations	Cubic Yard
502.261	Structural Concrete, ORT Slabs	Cubic Yard
502.262	Structural Concrete, Pavement Slabs	Cubic Yard
502.263	Structural Concrete, Plaza Islands, Bumpers, and Curtains Walls	Cubic Yard

SPECIAL PROVISION

SECTION 503

REINFORCING STEEL

(GFRP Reinforcing)

503.01 Description

The first paragraph is amended to read:

This work shall consist of fabrication, delivery and placing glass fiber reinforced polymer (GFRP) reinforcement in accordance with these Specifications and in conformance with the Plans, General Provisions and Special Provisions.

503.02 Materials

The following paragraphs are added:

Materials shall meet the following requirements:

All GFRP reinforcement shall conform to the requirements shown in AASHTO Bridge Design Guide Specification for GFRP - Reinforced Concrete Bridge Decks and Traffic Railings (November 2009), except as shown on the Plans, and as stated herein. All GFRP reinforcement bar shall be deformed or sand coated.

GFRP bars shall be from one of the following approved manufacturers:

1. Aslan 100 by Hughes Brothers Inc.
2. V-Rod by Pultrall Inc.
3. ComBAR by Schoeck Bauteile.
4. Mateen-Bar by Sigma Development Group, LLC.

All GFRP bars in the same structural component shall be supplied by the same manufacturer.

Documentation

For all GFRP reinforcement bar used on Authority projects, the bar manufacturer shall furnish the Resident with one hardcopy and one electronic copy of written certifications that the GFRP reinforcement meets the requirements of this specification. In addition, the certification shall list the test values and test procedures used to determine the physical properties of the GFRP reinforcement. Certifications bearing the notarized signature of a responsible authorized representative of the bar manufacturer are required. Each bundle of GFRP reinforcement shall be identified with a corresponding lot number with the lot numbers affixed to each bundle by means of a durable tag.

Repair Material

The material used to repair the cut ends of GFRP reinforcement shall comply with the requirements established by the bar manufacturer.

503.04 Protection of Material

The following paragraphs are added:

Delivery, storage and handling of GFRP reinforcing bars shall be in accordance with these Specifications. Prevent bending, coating with earth, oil, or other material, or otherwise damaging the reinforcement. When handling reinforcement, use equipment to avoid damaging or abrading the bar. Do not drop or drag reinforcement.

GFRP reinforcement shall be stored on skids or other supports a minimum of 12 inches above the ground surface and protected at all times from damage and surface contamination. The storage supports shall be constructed of wood, or other material that will not damage the surface of the reinforcement. Bundles of bars shall be stored on supports in a single layer. Each bundle shall be placed on the supports out of contact with adjacent bundles. Reinforcing bars expected to be stored outdoors for a period in excess of two months, shall be protected from ultraviolet radiation. Prevent exposure of reinforcing to temperatures above 120 degrees Fahrenheit during storage.

All handling of reinforcing bars by mechanical means shall be done by equipment having padded contact areas, or by the use of nylon webbing slings. The use of chains or wire rope slings shall not be allowed, even when used with padding. All bundles of bars shall be lifted with a strong back, spreader bar, multiple supports or a platform bridge to prevent bar-to-bar abrasion from sags in the bundles. Support points during lifting or transporting of bundled reinforcing bars shall be spaced at a maximum of 15 feet, or as required by the manufacturer, whichever is more restrictive.

Bundled bars shall be strapped together with non-metallic or padded straps in a manner to prevent bar-to-bar abrasion due to relative movement between bars.

Bars loaded for transport shall be loaded and strapped down in a manner that will prevent damage from motion and vibration, to the greatest extent possible. Bundles of bent bars shall be transported strapped to wooden platforms or shall be crated. All individual bundles and layers of bundles shall be separated, and supported by dunnage.

Individual bars shall be handled in a manner that prevents damage due to abrasion or impact, and at no time shall any bar be moved by dragging over any surface, including other reinforcing bars. Sufficient personnel shall be assigned to assure compliance with the above.

For GFRP bars the maximum total visible damage permitted on each linear foot shall not exceed two percent of the surface area in that linear foot of bar. The depth of the permissible damage shall not exceed 0.04 inches.

503.06 Placing and Fastening

The following paragraphs are added:

All reinforcement shall be accurately placed in the positions shown on the Plans and shall be firmly held there during the placing and setting of the concrete. Immediately before placing concrete the reinforcement shall be free from all foreign material which could decrease the bond between the reinforcing and concrete. Such foreign material shall include, but not be limited to: dirt, paint, oil, bitumen and dried concrete mortar.

Reinforcing bars within the formwork shall be secured to prevent movement during concrete placement. The bars must be adequately supported or tied to resist settlement, floating upward, or movement in any direction during concrete placement.

Field bending of GFRP shall not be allowed.

Field cutting of GFRP will be permitted only with the approval of the Resident. The field cutting shall be with a high speed cutter, fine blade saw, diamond blade or masonry saw. The GFRP bars shall not be shear cut.

Proper distances from the forms shall be maintained by means of stays, blocks, ties, hangers or other approved means. Blocks used for this purpose shall be precast Portland cement mortar blocks of approved shape and dimensions. Chairs may be used for this purpose and, when used, must be GFRP or plastic. The use of pebbles, pieces of broken stone or brick, metal pipe or wooden blocks shall not be permitted. The placing of reinforcement as concrete placement progresses, without definite and secure means of holding the bar in its correct position, shall not be permitted. Reinforcing bars used as support bars and spreader bars shall be the same type used for the main reinforcing.

Bars shall be fastened together at all intersections except where spacing is less than one foot in either direction, in which case, fastening at alternate intersections of each bar with other bars will be permitted providing this will hold all the bars securely in position. This fastening may be plastic or nylon ties only.

Minimum embedment lengths of reinforcing bars shall comply with the manufacturers published recommendations for the anchoring material selected. These embedment lengths shall be verified by the Resident before installation of the reinforcing bars. The reinforcing bar lengths indicated on the Plans may be reduced, at the Contractor's option, to the determined minimum embedment lengths.

Reinforcement shall be inspected and approved by the Resident before any concrete is placed.

503.07 Splicing

The following sentence is added:

Lap splice length for GFRP bars shall be as per manufacture’s recommendation.

503.10 Method of Measurement

The first sentence of the first paragraph is amended as follows:

GFRP reinforcing bars shall be measured by the computed number of pounds of reinforcement authorized.

503.11 Basis of Payment

The following is added:

The accepted quantity of GFRP reinforcing will be paid for at the Contract unit price per pound for each item involved, completed, and accepted.

Pay Item		Pay Unit
503.18	Glass Fiber Reinforced Polymer (GFRP) Reinforcing Bars, Fabricated and Delivered	Pound
503.19	Glass Fiber Reinforced Polymer (GFRP) Reinforcing Bars, Placing	Pound

SPECIAL PROVISION

SECTION 503

REINFORCING STEEL

(Synthetic Fiber Reinforcement)

The following Subsection shall be added:

503.01 Description

This work shall consist of furnishing synthetic fiber reinforcement to be used as temperature and shrinkage reinforcement in the structural concrete pavement slabs and ORT slabs.

503.02 Materials

The following sentence shall be added:

Synthetic fibers shall be STRUX 90/40 as manufactured by W. R. Grace & Co. or an approved equal.

The following Subsection shall be added:

503.03 Dosage

The dosage rate for synthetic fibers shall be five lbs per cubic yard of concrete.

503.10 Method of Measurement

The following sentence shall be added:

Synthetic fiber reinforcement will be measured by the pound.

503.11 Basis of Payment

Payment will be made under:

Pay Item		Pay Unit
503.90	Synthetic Fiber Reinforcement	Pound

SPECIAL PROVISION

SECTION 504

STRUCTURAL STEEL

(Space Frame Canopy, Fabricated and Delivered)
(Space Frame Canopy, Erection)
(Steel Post Support System)

504.01 Description

The following paragraphs are added:

This work shall also consist of designing, fabricating and erecting a space frame canopy in accordance with the Plans, these Specifications, and as directed by the Engineer. The Contractor shall have the option to fabricate the space frame canopy from galvanized steel or aluminum.

This work shall also consist of fabricating and erecting a steel support post system to support the space frame canopy in accordance with the Plans, these Specifications, and as directed by the Engineer. The steel support post system shall be fabricated from galvanized steel.

The space frame shall be designed, fabricated and manufactured by one of the following companies, or an approved equal:

- Delta Structures, Inc., 811 Eagle Drive, Bensenville, IL 60106
- Novum Structures, LLC, W126 N8585 Westbrook Crossing, Menomonee Falls, WI 53051
- Gossamer Space Frames, 5622 Research Drive, Ste. B, Huntington Beach, CA 92649

Design of the space frame canopy and steel post support system shall be in accordance with the Plans, these Specifications, and the AASHTO Standard Specifications for Structural Supports for Highway Signs, Luminaries, and Traffic Signals, 5th Edition, with 2010 and 2011 Interims.

Fabrication of the space frame canopy and steel post support system shall be completed in accordance with Standard Specification Subsections 504.14 through 504.39 with modifications included in this Specification.

Erection of the space frame canopy and steel post support system shall be completed in accordance with Standard Specification Subsections 504.40 through 504.56.

504.02 Materials

The following paragraphs are added:

The space frame canopy and steel post support system shall be fabricated from the following:

- Structural steel plates and shapes shall be ASTM A572, Grade 50 and shall meet the requirements of AWS D1.1, Section 4, Part D for CVN testing.
- Aluminum extrusions shall conform to 6061-T6.
- Pipes for use in the space frame canopy shall conform to one of the following:
  - ASTM A500, Grade B (Fy = 46 ksi) (minimum)
  - 6061-T6 Aluminum

Anchor rods shall conform to ASTM F1554, Grade 105.

Nuts, washers, and anchor rods shall be hot dip galvanized. Bolts and anchor rods shall be furnished with double nuts and washers. Threaded length shall be in accordance with the details shown.

Galvanized components, including fasteners, used in the space frame canopy and support post system that are in contact with aluminum elements shall be stainless steel; or provisions shall be made to isolate galvanized components from direct contact with aluminum parts using stainless steel sheet metal separators or Teflon pads.

Materials not specifically covered in the Plans and Specifications shall be in accordance with the AASHTO Standard Specifications for Structural Supports for Highway Signs, Luminaries, and Traffic Signals, 5th Edition, with 2010 and 2011 Interims, and shall be subject to approval by the Engineer.

504.03 Drawings

The first sentence of the first paragraph is deleted and replaced with the following:

The Contractor shall submit design computations, fabrication drawings, erection plans and other necessary working drawings in accordance with Subsection 105.07, Working Drawings.

504.06 Inspection

The second paragraph is deleted and replaced with the following:

Quality Control and all testing of welds shall be certified by a qualified laboratory engaged by the Contractor and approved by the Engineer. The Contractor shall forward the certifications to the Engineer and shall pay for all costs of weld inspection and certification as herein specified.

The Engineer reserves the right to inspect, by nondestructive testing techniques, all welds and adjacent base metal as deemed warranted. All such additional testing shall be paid for by the Authority.

504.14 Materials for Bridges

This Subsection is deleted and replaced with the following:

The space frame canopy and steel post support system shall be fabricated from one of the following pipe or tubular materials:

- High-strength low alloy steel pipe of the nominal diameter and schedule shown on the Plans, or equal, subject to the approval of the Engineer.
- Aluminum pipes and extrusions conforming to 6061-T6.

504.15 Design

This Subsection is deleted and replaced with the following:

Design, detail and load requirements shall conform to the AASHTO Standard Specifications for Structural Supports for Highway Signs, Luminaries, and Traffic Signals, 5th Edition, with 2010 and 2011 Interims, and shall be subject to approval by the Engineer.

504.16 Fabrication

This Subsection is deleted and replaced with the following:

Fabrication shall be in accordance with *ANSI/AASHTO/AWS D1.1 Structural Welding Code* (the D1.1 Code) as modified herein, and these Specifications.

Ends of sections shall be cut true and smooth, free from burrs and ragged breaks. Open ends of tubular sections shall be capped. Drain holes shall be provided where required and as noted on the Plans.

End connections for the space frame canopy chords to the nodal points shall be bolted. No welding shall be used for the field assembly of the space frame canopy. Crimped end connections for tubular members shall not be used in the space frame canopy structure.

Material shall be handled in a manner that prevents nicks, gouges or other damage from chains, wire ropes or other handling devices during all phases of construction.

All surfaces of the completed steel support post system shall be finished with a galvanized coating. The support post system components shall be fabricated in complete units as shown on the Plans, so as to provide for ease of handling in pickling and galvanizing tanks so that galvanizing may be done on the fabricated section. Any repair of zinc coatings damaged by handling and erection shall be kept to a minimum. Damaged galvanized coatings shall be repaired in accordance with ASTM A780.

Aluminum material 1/2 inch thick or less may be cut by shearing, sawing, or milling. Material over 1/2 inch thick shall be sawed or milled. Cut edges shall be true and smooth and free from excessive burrs or ragged breaks. Reentrant cuts shall be filleted by drilling prior to cutting. Flame cutting will not be permitted. No welding of aluminum shall be permitted.

504.30 Welded Fabrication

The following paragraphs are added:

All welding shall be done in the shop by the inert gas shielded arc method. The procedures, techniques, standards of acceptance, inspection and methods of repair for all welded joints shall be in accordance with AWS D1.1. Any defects detected shall be corrected by removing and replacing the entire weld.

All welds shall meet the "quality of welds" requirements specified in the sections on "Design of New Bridges" and "Tubular Structures" of the structural welding code. All welds not meeting these quality requirements shall be repaired and/or replaced by the Contractor to meet these requirements and check tests, without additional cost to the Authority.

Welds shall be tested using the magnetic particle inspection procedure in accordance as follows:

- 100 percent of the welds securing the support post columns to their base plates.
- No less than 25 percent of all other welds within the completed structure.

Transverse butt welds shall be tested throughout their entire length using radiographic inspection procedures. Longitudinal seam welds shall be tested throughout their entire length using ultrasonic inspection procedures.

504.41 Methods and Equipment

This Subsection is deleted and replaced with the following:

The erection of the space frame canopy shall be in accordance with the space frame canopy Manufacturer's recommendations, as approved by the Engineer, and with these Specifications. A manufacturer's representative of the space frame canopy shall be onsite to supervise the assembly and erection of the space frame canopy.

After the support posts for the canopy have been placed over the anchor bolts onto the leveling nuts, the nuts shall be adjusted until the support posts are truly vertical. The upper nuts shall then be tightened and the space between the concrete base and the underside of the base plate shall be completely filled with non-shrink grout. Following placement of the grout, exposed surfaces of the grout and concrete shall be kept moist for at least 72-hours by means of wet burlap or fabric mats.

Under no circumstances shall the space frame canopy be erected before the expiration of the curing period for the grouted portion of all pedestals.

Attention is directed to Special Provision Section 652 regarding maintenance and protection of traffic during work adjacent to, or over active roadways. Work adjacent to, or over active roadways will not be permitted unless appropriate traffic control measures are in place and have been approved by the Resident.

504.641 Method of Measurement

The following Subsection is added:

Fabrication and delivery of the accepted space frame canopys will be measured as one lump sum.

Erection of the space frame canopys will be measured as one lump sum.

The steel post support system will be measured as one lump sum, satisfactorily fabricated, delivered and erected.

Any temporary false work or support systems required for the erection process will not be measured for payment separately, but shall be considered incidental to the related Contract items.

504.65 Basis of Payment

This Subsection is deleted and replaced with the following:

The space frame canopy and steel post support system will be paid for at the Contract Lump Sum price for the respective pay items. Payment will be full compensation for all materials, fabrication, inspection, testing, installation, false work, equipment, labor and incidentals necessary to fabricate, deliver, and erecting the space frame canopy and support system.

Payment will be made under:

Pay Item		Pay Unit
504.80	Space Frame Canopy, Fabricated and Delivered	Lump Sum
504.81	Space Frame Canopy, Erection	Lump Sum
504.90	Steel Post Support System	Lump Sum

SPECIAL PROVISION

SECTION 504

STRUCTURAL STEEL

(Mounting Bracket Assemblies)

504.01 Description

The following paragraphs are added:

This work shall consist of fabricating and erecting Mounting Bracket Assemblies for the support of overhead signs as shown on the Plans and ORT equipment to be furnished and mounted by others in accordance with the Plans and as directed by the Engineer.

Fabrication and Erection of the Mounting Bracket Assemblies shall be completed in accordance with Subsections 504.01 through 504.13 and with Subsections 504.57 through 504.64.

504.02 Materials

The following paragraphs are added:

The Mounting Bracket Assemblies shall be constructed of hot dip galvanized Unistrut Brand materials, manufactured by Unistrut Corporation, or an approved equal.

Nuts, washers, and all miscellaneous hardware, unless otherwise noted, shall be stainless steel conforming to ASTM A276. All bolts shall be furnished with nuts and lock washers.

Any components of the Mounting Bracket Assemblies that are in contact with aluminum elements shall be stainless steel; or provisions shall be made to isolate galvanized components from direct contact with aluminum parts using stainless steel sheet metal separators or Teflon pads.

Materials not specifically covered in the Plans and Specifications shall be in accordance with the AASHTO Standard Specifications for Structural Supports for Highway Signs, Luminaries, and Traffic Signals, 5th edition, with 2010 and 2011 Interims, and shall be subject to approval by the Engineer.

504.03 Drawings

The first sentence of the first paragraph is deleted and replaced with the following:

The Contractor shall submit design computations, fabrication drawings, erection plans, and other necessary working drawings in accordance with Subsection 105.07, Working Drawings.

504.16 Fabrication

This Subsection is deleted and replaced with the following:

Ends of sections shall be cut true and smooth, free from burrs and ragged breaks. Material shall be handled in a manner that prevents nicks, gouges or other damage from chains, wire ropes or other handling devices during all phases of fabrication.

All connections between the mounting bracket assemblies and the supporting space frame shall be bolted. No welding will be permitted for field assembly or erection of the mounting bracket assemblies.

All surfaces of the completed mounting bracket assemblies shall be hot dip galvanized. Any repair of zinc coatings damaged by handling and erection shall be kept to a minimum. Damaged galvanized coatings shall be repaired in accordance with ASTM A780.

504.41 Methods and Equipment

This Subsection is deleted and replaced with the following:

The erection of the mounting bracket assemblies shall be in accordance with the Plans, as approved by the Engineer, and with these Specifications.

Attention is directed to Special Provision Section 652 regarding maintenance and protection of traffic during work adjacent to, or over active roadways. Work adjacent to, or over active roadways will not be permitted unless appropriate traffic control measures are in place and have been approved by the Resident.

504.641 Method of Measurement

The following Subsection is added:

The specified quantity of Mounting Bracket Assemblies will be measured as one lump sum, satisfactorily fabricated, installed and accepted by the Resident.

504.65 Basis of Payment

This Subsection is deleted and replaced with the following:

Mounting Bracket Assemblies will be paid for at the Contract Lump Sum price for the respective pay items. Payment will be full compensation for all materials, fabrication, installation, equipment, labor and incidentals necessary for furnishing and erecting the Mounting Bracket Assemblies.

Payment will be made under:

Pay Item		Pay Unit
504.91	Mounting Bracket Assemblies	Lump Sum

SPECIAL PROVISION

SECTION 504

STRUCTURAL STEEL

(Metal Stairs)

504.01 Description

This work shall consist of furnishing and installing industrial-type metal stairs in accordance with these Specifications and in conformity with the locations and dimensions shown on the Plans. The stairs shall consist of steel treads, steel platforms, steel tube railings attached to metal stairs, and steel tube handrails attached to the concrete walls adjacent to the metal stairs. Metal stairs are located at the northern and southern stairwells of the tunnel.

504.02 Materials

The following information is added:

- Steel Pipe: ASTM A53, Standard Weight, zinc coated.
- Sheet Steel: ASTM A1008.
- Structural Steel: ASTM A36.
- Steel Floor Plate: ASTM 786.
- Steel Decking: Form from zinc coated steel conforming to ASTM A446, with properties conforming to AISI Specification for the Design of Cold-Formed Steel Structural Members.
- Steel Plate: ASTM A1011.

504.03 Working Drawings

The following paragraphs are added:

The Contractor's stair manufacturer shall submit shop drawings of the metal stair elements which shall illustrate individual element dimensions, layout, and installation procedures as necessary for the Contractor to construction the stairs in accordance with the phased construction denoted in the contract Plans. The shop drawings will be reviewed by the engineer of record and approval will be established in accordance with Section 105.7 of these Specifications. Approval of the shop drawings shall be completed prior to fabricating any stair segments.

504.15 Design

The following paragraph is added:

- Design stairs to support a live load of 100 pounds per square foot.
- Concentrated Load: 300 lbf applied on an area of 4 sq. in.
- Uniform and concentrated loads need not be assumed to act concurrently.

- Structural design, fabrication and assembly in accordance with requirements of NAAMM Metal Stairs Manual, except as otherwise specified or shown.
- Design pipe railings in accordance with NAAMM Pipe Railing Manual for 200 pounds in any direction at any point.

504.16 Fabrication

The following paragraphs are added:

Fasteners:

1. Conceal bolts and screws wherever possible.
2. Use countersunk heads on exposed bolts and screws with ends of bolts and screws dressed flush after nuts are set.

Welding:

1. Structural steel, AWS D1.1 and sheet steel, AWS D1.3.
2. Where possible, locate welds on unexposed side.
3. Grind exposed welds smooth and true to contour of welded member.
4. Remove welding splatter.

Remove sharp edges and burrs.

Fit stringers to head channel and close ends with steel plates welded in place where shown.

Fit face stringer to newel post by tenoning into newel post, or by notching and fitting face stringer to side of newel where shown.

Painting: Prepare surface and apply paint coating system as specified for metals in Section 506, Coatings. Paint coating system shall comprise a zinc primer with a polyurethane top coat. The top coat shall be a glossy finish and a color chosen by the Authority from the manufacturer's standard color pallet.

504.641 Railings

The following paragraph is added:

- Fabricate railings, including handrails, from steel pipe with flush.
  1. Connections may be standard fittings designed for welding, or coped or mitered pipe with full welds.
- Return ends of handrail to wall and close free end.
- Provide standard terminal castings where fastened to newel.
- Space intermediate posts not over six feet on center between end post or newel post.
- Provide standard terminal fittings at ends of post and rails

504.642 Stairs

The following paragraphs are added:

- Provide treads, platforms, railings, stringers and other supporting members.
- Treads and platforms of checkered or button-embossed steel floor plate:
  1. Turn floor plate down to form nosing on treads and edge of platforms.
  2. Support tread and platforms with angles welded to plate.

3. Do not leave exposed fasteners on top of treads or platform surfaces.
4. Provide flat sheet steel risers for stairs with steel plate treads where shown.
5 Create abrasive surface on nosing, on treads, and on edge of platforms stairs.
6. Provide toe plates around the perimeter of platforms.

504.643 Installation

The following paragraphs are added:

Stair Installation

- Provide hangers and struts required to support the loads imposed.
- Perform job site welding and bolting as specified for shop fabrication.
- Set stairs and other members in position and secure to structure as shown.
- Install stairs plumb, level and true to line.
- Provide steel closure plate to fill any gap between the stringer and surrounding wall.
- Weld and finish with prime and paint finish of adjoining steel.

Railing Installation

- Install standard terminal fittings at ends of posts and rails.
- Secure brackets, posts and rails to steel by welds, and to masonry or concrete with expansion sleeves and bolts, except secure posts at concrete by setting in sleeves filled with commercial non-shrink grout.
- Set rails horizontal or parallel to rake of stairs to within 1/8-inch in 12 feet.
- Set posts plumb and aligned to within 3 mm in 1/8-inch in 12 feet.

Field Painting (touch-up)

- When installation is complete, clean field welds, connections, and surrounding areas to bright metal, and coat with same primer paint used for shop priming.
- Touch-up abraded areas with same primer paint used for shop priming.
- Complete painting with touch-up polyurethane coat.

504.649 Method of Measurement

The following paragraph is added:

The Metal Stairs will be measured for payment as one lump sum unit, complete, and accepted.

504.65 Basis of Payment

The following paragraphs are added:

The accepted quantity of Metal Stairs will be paid for at the contract lump sum price, which shall include all labor and materials required for the fabrication, delivery, and installation of the stair segments. Shop drawing submittals shall be incidental to the Metal Stairs pay item.

Payment will be made under:

Pay Item		Pay Unit
504.96	Metal Stairs	Lump Sum

SPECIAL PROVISION

SECTION 506

FIELD COATING APPLICATION

506.01 Description

This Specification covers the field cleaning and painting of the existing Falmouth Spur Toll Plaza Canopy Support Columns and Canopy Structural Members for Lanes 7 and 8. The following areas are required to be cleaned and painted:

All remaining canopy support columns and canopy structural members for lanes 7 and 8 with a cleanliness level of SSPC-SP 2. Any areas of corrosion, deteriorated paint, and other detrimental foreign matter to an SSPC-SP 3 condition on all remaining canopy support columns and canopy structural members for lanes 7 and 8. Any areas of corrosion and/or deteriorated areas of galvanizing on the corrugated underside decking for lanes 7 and 8 shall receive a SSPC-SP 2 cleanliness level and touch-up with a cold galvanizing compound approved by the Resident.

The work shall consist of furnishing all supervisory personnel, competent person(s), labor, tools, equipment, containment, scaffolding, protection of public and private property, Quality Control activities, materials, and incidentals necessary for satisfactory completion of the work.

If applicable, all lead abatement requirements shall be in compliance with current Local, State, and Federal regulations, the requirements of Subsection 105.2.4.2, Lead Paint, Special Provisions 506.08(E), Hazardous Waste Management Plan, 506.7,0 Containment System and Disposal of Hazardous Materials, and 506.80, Lead Health Protection.

Appendix B - Lead Paint Assessment, is included in this Contract for informational purposes.

In reference to surface preparation, cleanliness, coating application, containment measures, and hazardous waste management, the Contractor shall have the latest copies of the following reference on-site at all times:

1. Steel Structures Painting Council's Steel Structures Painting Manual, Volumes 1 and 2 (Good Painting Practice and Systems and Specifications).
2. SSPC-VIS 3, Visual Standard for Power and Hand-Tool Cleaned Steel.
3. SSPC Guide 6, Guide for Containing Surface Preparation Debris Generated During Paint Removal Operations.
4. SSPC Guide 7, Guide to the Disposal of Lead-Contaminated Surface Preparation Debris.
5. Maine Department of Environmental Protection's "Hazardous Waste Management Rules".
6. Maine Department of Environmental Protection – Handbook for Hazardous Waste Generators.
7. OSHA 29 CFR Part 1910 "Occupational Safety and Health Standards" and Part 1926 "Safety and Health Regulations for Construction".

8. OSHA 40 CFR Part 264 “Hazardous Waste Contingency Plan”.
9. OSHA 42 CFR Part 84 “Respiratory Protective Devices”.

All surface preparation, containment, and field painting included in the Contract shall be sequenced to accommodate maintenance of traffic in accordance with Section 652, Maintenance of Traffic, Subsection 107.4.7, Limitations of Operations, and as shown in the Maintenance of Traffic Plans.

506.02 Materials

Materials shall comply with the requirements of the respective Subsections of this Specification.

506.03 Submittals

Contractor shall submit the following for review to the Resident:

- Contractor’s Certifications
- Quality Control Plan
- Surface Preparation / Painting Plan
- Material Safety Data Sheets
- Containment Plan
- Hazardous Waste Management Plan
- Environmental Protection Plan
- Health and Safety Plan
- SPCC Plan
- Finish coat color sample per 506.21 Materials
- All other documentation as specified herein

506.05 Inspection

For the purpose of this Specification, the following definitions shall apply:

Quality Assurance Inspector (Q.A.I.): The Authority’s authorized representative for field inspection.

Quality Control Inspector (Q.C.I.): The Contractor’s authorized representative for field surface preparation and application.

Quality Control (Q.C.) is the responsibility of the Contractor. The Q.C.I. shall inspect all aspects of the work and shall supervise required testing. The Q.C.I. shall record measurements and test results in a Job Control Record (JCR). The Q.C.I. shall reject materials and workmanship that do not meet Contract requirements. The results of all testing shall be documented and a copy made available to the Q.A.I. on a daily basis or as requested by the Resident or Q.A.I.

The JCR shall include the following typical testing requirements, as applicable:

- Surface Preparation Cleanliness and Anchor Profile - before application of the first or primer coat.
- Environmental conditions - Ambient temperature, surface temperature, relative humidity, and dew point prior to the application of each coat and at the conclusion of final coating application of the work shift.
- Dry Film Thickness (DFT) - After the coating has cured and before the application of any subsequent coating.
- Type of testing equipment, model, serial number and calibration data, if applicable.
- Type of application equipment.
- Type of containment, when required.
- Coating batch and/or lot number, date of manufacture, and shelf life.
- Manufacturer's certification of conformance.
- Name(s) of applicator(s).
- Cure data, cure times, temperature, and relative humidity.
- Final inspection by the Q.C.I. and acceptance by the Resident or Q.A.I.

Quality Assurance (Q.A.) is the prerogative of the Authority. The Q.A.I. will ensure that the Q.C. is being performed properly, verify documentation, periodically inspect workmanship, and witness testing. Q.A. testing deemed necessary by the Resident in addition to the minimum test requirements shall be scheduled to minimize interference with the production schedule.

506.06 Quality Assurance Inspector's Authority

The Q.A.I. will have the authority to reject material or workmanship that does not meet the Contract requirements. The acceptance of material or workmanship by the Q.A.I. will not preclude subsequent rejection, if materials or workmanship is found unacceptable, by other authorized representatives of the Authority.

506.07 Rejections

Rejected material or workmanship, as described above, shall be corrected or replaced by the Contractor, at no additional cost to the Authority.

506.08 Contractor Qualification

All Contractors and Subcontractors involved in the cleaning and removal of existing painted surfaces shall be certified in accordance with SSPC-QP 2 "Standard Procedure for Evaluating the Qualifications of Painting Contractors to Remove Hazardous Paint".

All Contractors and Subcontractors involved in the field application and touch-up of the steel coating system shall be certified in accordance with SSPC-QP 1 "Standard Procedure for Evaluating Qualifications of Painting Contractors: Field Application to Complex Structures".

All Contractor and Subcontractor SSPC certifications specified above shall be current and in-place prior to bid opening. The Contractor shall ensure that all required SSPC certifications are kept current throughout the duration of the Contract until final acceptance of the work. A copy of valid current certifications shall be transmitted with the Bid Package.

A) Quality Control Personnel Qualifications:

The Contractor's Quality Control personnel shall have successfully completed the National Association of Corrosion Engineers (NACE) Coating Inspector Program (CIP) Level 1, 2 and 3 – Peer Review training, with certifications in current standing, or shall provide evidence of successful inspection of three projects of similar size and scope that have been completed in the last two years. References shall include the name, address, and telephone number of a contact person employed by the bridge owner. The personnel performing the Quality Control tests shall be trained in the use of the Quality Control instruments. Documentation of training shall be provided to the Resident.

If the Quality Control personnel the Contractor engages for the Project does not follow and enforce the approved Quality Control Plan, the Resident may require the Contractor to retain the services of an independent, third party certified NACE inspector for the remainder of the Project, at no additional cost to the Authority.

B) Quality Control Plan:

The Contractor shall submit a Quality Control Plan (QCP) to the Resident for review a minimum of 21 days prior to initiating any removal of paint from the existing toll plaza(s). The Quality Control is the responsibility of the Contractor to ensure compliance with the Contract documents. The QCP shall, at a minimum, include the names of all the Contractor's representatives on-site, who shall be responsible for the inspection, and the acceptance of the Contractor's work prior to inspection by the Resident. The plan shall also define hold points, submittals of Job Control Records, coating / DFT reports and the process for rework. Inspection by the Contractor's representative shall be incidental to the surface preparation.

The Contractor shall adhere to the approved QCP at all times. Violation of the QCP, including failure to submit daily work reports and/or coating and DFT reports, may result in a suspension of work. If suspension is ordered in writing by the Resident, work shall not resume until the Contractor provides a plan in writing, which is acceptable to the Resident, describing how compliance will be restored and maintained. A suspension resulting from the Contractor's failure to adhere to the approved QCP shall be at no additional cost to the Authority and shall not be cause for a time extension of the Contract.

C) Surface Preparation / Painting Plan:

The Contractor shall submit to the Resident for review, written procedures for the surface preparation, remediation of soluble salts, coating application, and coating touch-up/repair. This plan shall include a description of the equipment that will be used for surface preparation and painting. This plan shall also include the surface preparation methods to be used in "sensitive areas" (e.g., "EZ-Pass" equipment, utilities, lighting fixtures, galvanized surfaces, galvanized conduit, galvanized conduit supports etc.). If any of the areas that are determined to be "sensitive" by the Resident receive damage due to any work operations, the Contractor shall be

responsible for all damage at no additional cost to the Authority. The Contractor shall receive approval from the Resident before performing work adjacent any "sensitive areas".

This plan shall address methods for sequencing work to accommodate Maintenance of Traffic in accordance with Section 652, Maintenance of Traffic, Subsection 107.4.7, Limitations of Operations, and as shown in the Maintenance of Traffic Plans.

This plan shall also identify the methods of protection or work isolation procedures that will be followed to protect surrounding structures, toll equipment, utilities, and property of the Authority from exposure to surface preparation and paint debris. The Contractor is responsible for any damage caused by the surface preparation.

The Contractor shall submit the manufacturers' product data sheet(s) for the specified protective coating system in the submission to the Resident.

D) Containment and Environmental Plan:

At least two weeks prior to starting the surface preparation and/or painting of the structure, the Contractor shall submit the proposed Containment Plan to the Resident for review. The Containment Plan shall address the Contractor's proposed containment and pollution control measures for each work zone phase of the containment systems attached to the toll plaza canopy, framing members, and/or toll booths. Containment enclosures shall meet the requirements of SSPC Guide 6 Class 3P. Containment walls used to separate the lane closure work zone from the traveling public and toll plaza employees shall be fastened securely so that they do not billow more than six inches from the vertical. All interfaces between the containment and toll plaza components shall be constructed as necessary to prevent any debris from exiting the containment during cleaning operations.

As soon as the containment installation begins, the Contractor shall immediately provide full 24/7 access for emergency egress for toll plaza personnel from both sides of the operational toll booth(s), while maintaining the integrity of the containment system once installation is complete. Access configuration and functionality shall be approved by the Resident before containment installation continues.

The Contractor shall submit a plan and drawings for the installation, moving, and removal of the containment enclosure, as well as the means and methods of providing and maintaining emergency access. The Containment Plan shall address methods for sequencing work to accommodate maintenance of traffic in accordance with Section 652 Maintenance of Traffic, Subsection 107.4.7 Limitations of Operations, and as shown in the Maintenance of Traffic Plans.

The erection of containment enclosure(s), or conducting any paint removal activities, shall not begin until the Resident has reviewed the Containment Plan and authorized the Contractor to begin work.

The Contractor is responsible for ensuring the containment meets all OSHA, Federal and State regulations.

All equipment placement and work shall be in strict conformance with Section 652, Maintenance of Traffic.

E) Hazardous Waste Management Plan:

A minimum of two weeks prior to undertaking the removal of existing coatings, the Contractor shall submit a Hazardous Waste Management Plan (EPA/DEP) to the Resident outlined below which, if applicable, shall include the requirements of Subsection 105.2.4.2, Lead Paint.

Procedures used for management and disposal of any lead paint and associated hazardous materials shall conform to the latest requirements of SSPC Guide 7 "Guide for the Disposal of Lead-Contaminated Surface Preparation Debris", and all Federal, State, and local requirements. The Contractor shall have a copy of the SSPC Guide 7 available on-site at all times. The Contractor shall also have a copy of the Maine Department of Environmental Protection's (DEP's) Handbook for Hazardous Waste Generators, and a copy of the State of Maine Hazardous Waste Management Rules, 06-096 CMR Chapters 850-857, on-site at all times.

Plans and drawings of the Hazardous Waste Management Plan shall be prepared and stamped by a Professional Engineer licensed in the State of Maine.

The Contractor shall have aid agreements with the local fire department, police department, hospital, and hazardous waste spill responder for each town. Copies of these agreements shall be provided to the Resident prior to generating any waste, in conformance with DEP Rules, Chapter 851, Section 13, Part C (7)(c)(ii) and OSHA 40 CFR Part 264.37.

See Subsections 506.70 through 506.72 for additional requirements.

G) Health and Safety Plan:

A minimum of two weeks prior to performing any work on the toll plaza(s), the Contractor shall submit to the Resident a written site-specific Health and Safety Plan. If applicable, the plan shall conform to the requirements of Subsection 105.2.4.2, Lead Paint.

Failure of the Contractor or Subcontractors to comply with the provisions for the Health and Safety Plan defined in this Specification will affect whether the Contractor or Subcontractors will be considered a responsible Contractor or Subcontractor on future work involving structure rehabilitation and removal of hazardous paint coatings on projects for the Maine Turnpike Authority.

H) Spill Prevention Control and Countermeasure Plan:

Prior to the start of construction, the Contractor shall submit a Spill Prevention Control and Countermeasure (SPCC) Plan in accordance with the requirements of Subsection 105.8.1, Temporary Soil Erosion and Water Pollution Control.

06.09 Thru 506.19 Vacant

COATING SYSTEMS

506.20 Description

Work shall consist of the field application of coating systems in accordance with the Plans and Specification. Each coat shall be applied in accordance with the manufacturer's product data sheet and this Specification.

506.21 Materials

FIELD COATING SCHEDULE

One of the following coating systems shall be used. Alternately, an equivalent system may be proposed and used by the Contractor, subject to approval by the Authority:

Manufacturer:	The Sherwin Williams Company
Primer:	Corothane I PrePrime moisture-cure urethane
Intermediate:	Corothane I MIO Aluminum moisture-cure urethane
Finish:	Corothane I HS moisture-cure urethane

Manufacturer:	Wasser Corporation
Primer:	MC Miozinc 2.8 moisture-cure urethane
Intermediate:	MC Miomastic 2.8 moisture-cure urethane
Finish:	MC Shieldcoat 2.8 moisture-cure urethane

Manufacturer:	Xymax Coatings, Inc.
Primer:	Mono Lock PP moisture-cure polyurethane
Intermediate:	Mono Ferro PUR moisture-cure polyurethane
Finish:	Bridge Finish moisture-cure polyurethane

All three coats of the paint system shall be contrasting colors as follows:

Primer:	Default by the manufacturer
Intermediate:	Light gray as approved by the Resident
Finish:	“Toll Booth Dark Blue” Color formula to be provided by the Resident

The Contractor shall provide a dried sample of the specified finish color to the Authority for approval prior to the batching and delivery of the finish coat. Sample size, shape, and material shall be agreed upon with the Resident prior to submission.

The Contractor shall provide the paint batch description, lot number, date of manufacture, shelf life, and the manufacturer's published storage requirements to the Resident. The Contractor shall provide the manufacturer's product data sheet for each coating. The product data sheets shall include the manufacturer's recommended requirements for the equipment, surface cleanliness, mixing, thinning, application, environmental conditions, touch-up/repair procedures, and cure times for the entire range of allowable environmental conditions. All product data sheets and MSDS shall be submitted to the Resident for approval prior to initiating any coating work.

The product data sheets shall also provide the minimum and maximum recoat times for the primer and intermediate coat over the expected range of temperatures, relative humidity, and range of acceptable dry film thicknesses. The manufacturer's product data sheets at the time of submission shall be those used during the duration of the Project. Newly published product data sheets may be substituted as approved by the Resident.

506.22 Limits of Work

All existing exposed steel surface areas on the toll plaza(s) specified herein shall be coated including all connection components.

506.23 Surface Preparation

The following SSPC cleanliness levels are required for this work:

All remaining canopy support columns and canopy structural members for lanes 7 and 8 with a cleanliness level of SSPC-SP 2. Any areas of corrosion, deteriorated paint, and other detrimental foreign matter to an SSPC-SP 3 condition on all remaining canopy support columns and canopy structural members for lanes 7 and 8. Any areas of corrosion and/or deteriorated areas of galvanizing on the corrugated underside decking for lanes 7 and 8 shall receive a SSPC-SP 2 cleanliness level and touch-up with a cold galvanizing compound approved by the Resident.

Solvent clean all surfaces as necessary with clean rags to remove dirt, grease, oil, and other foreign matter in accordance with SSPC-SP 1 before employing surface preparation methods. Pressure washing is not permitted.

Surface preparation cleanliness levels as stated above for these areas shall be the minimum unless a higher standard of surface cleanliness is required by the manufacturer's product data sheet. SSPC-VIS 1 shall be used to determine acceptable surface cleanliness.

The tools used to remove these corrosion products shall be identified in the submittals and accepted by the Resident. If the surface preparation or removal of rust results in nicks or gouges, the work will be suspended by the Resident. The Contractor shall demonstrate that the necessary adjustments have been made to prevent a reoccurrence of the damage prior to resuming work.

The Contractor shall remove and properly dispose of any latent concrete from prior toll plaza structural work, accumulated winter sand/salt, bird droppings, dirt, grease, oil, asphalt coatings, and debris from all areas to be prepared and painted prior to undertaking any paint removal or surface preparation operations. Removal and disposal of existing debris and foreign matter as described above shall be considered incidental to the Surface Preparation.

Chloride and ferrous salts may be present on the existing surfaces to be cleaned and painted, especially where corrosion is present. Prior to painting these surfaces, these salts must be reduced to acceptable levels. The Contractor shall verify that residual soluble salts on the canopy support columns are at a surface cleanliness condition of SC-2 or better, in accordance with SSPC-SP 12, as determined by the KTA SCAT Kit, Chlor-Rid Test, or an approved equal. Acceptable level thresholds are:

- Chloride < 7 µg/cm²
- Ferrous Ion < 10 µg/cm²
- Sulfate < 17 µg/cm²

Test for chlorides after surface preparation at the following frequency, unless approved otherwise: Two tests per toll booth work zone. Test locations are to be approved by the Resident or Q.A.I.

If unacceptable levels of soluble salt remain, the Contractor shall clean the affected areas in accordance with SSPC-SP 1 until acceptable results are achieved. All testing and retesting shall be incidental to the Surface Preparation and shall be at no additional cost to the Authority and shall not be just cause for a time extension. The Contractor shall describe the proposed method(s) of soluble salt remediation, and other contamination in the Surface Preparation / Painting Plan.

After surface preparation, the surface shall be visually inspected by the Q.C.I. and Q.A.I. for fins, tears, delaminations, and other unacceptable discontinuities. Unacceptable discontinuities shall be removed with a grinder or other suitable power tool and the area shall be blended at a slope of approximately 1:20.

Prior to the first coat or primer application, all steel surfaces to be painted shall be cleaned of dust and debris by vacuum method. Surface blow down with compressed air will not be permitted.

The allowable time between the SSPC-SP 3 power tool cleaning and primer application shall not exceed the manufacturer's published recommendations or eight hours, whichever is less.

506.24 Application

The Contractor shall provide adequate protection to the local environment, traveling public, and toll plaza employees from the application of the coating. Only brush and roller application is allowed or as recommended by the manufacturer. Application by spray will not be permitted.

The Q.A.I. shall witness the mixing and thinning of the coatings. Failure to notify the Q.A.I. shall result in the coating being rejected.

Thinning and mixing of coatings shall be in conformance with the manufacturer's product data sheet and shall be in conformance with all Local, State and Federal VOC regulations. Thinner shall be measured using a graduated cup or other container that clearly indicates the amount of thinner being added. Mixing shall be done using the method, equipment, and time recommended by the coating manufacturer.

The Q.C.I. shall record the batch and lot numbers of the coating, the type and amount of thinner used, and the time and pot life of the coating. The Q.A.I. shall confirm that the record is correct.

Coating equipment including mixers, rollers, and brushes shall meet the recommendations of the manufacturer's product data sheet.

Surfaces to be painted that are adjacent to concrete, canopy underside panels, traffic signs, roof light fixtures, traffic (red/green) light fixtures, toll booths, and “EZ Pass” equipment, shall be masked off to provide a neat appearance when painted. Acceptability of the masking procedure shall be at the discretion of the Resident.

The environmental conditions in the immediate vicinity of the steel to be coated shall be within the ranges in the manufacturer's product data sheet during the coating operation and during the cure period. Ambient temperature, surface temperature, relative humidity, and dew point shall be measured and recorded by the Q.C.I. The Q.A.I. may perform environmental testing in addition to the testing performed by the Q.C.I. If there are differences between the test results, the differences shall be resolved or explained to the satisfaction of the Resident prior to coating application. The results of the environmental testing shall be recorded in the JCR.

Cure and recoat times shall be in accordance with the manufacturer's product data sheet for the environmental conditions at the time of application and cure and recorded in the JCR. The Contractor shall provide the cure and recoat times for the environmental conditions in the immediate vicinity of the coated product. The cure times with coinciding environmental condition requirements shall be provided on the product data sheet or be authorized in writing by a technical representative of the coating manufacturer.

If the coating becomes contaminated with dust, debris, over spray, or other deleterious material, the surface shall be solvent cleaned in accordance with SSPC-SP 1 prior to any subsequent coating applications. Other methods of cleaning may be used if approved by the Resident. Areas exhibiting trapped fiber or bristles shall be rejected.

The Q.A.I. shall be given ample notice and time in order to inspect the product prior to coating, recoating, or removal of paint from unacceptable areas. Substrates that are primed or surfaces that are recoated without notification of the Q.A.I. shall be rejected and no further coating shall be performed. Coating applied without notification of the Q.A.I. may be investigated by destructive and non-destructive testing as directed by the Resident and by a review of the JCR. The Resident may reject, conditionally accept, or accept the coating based on documentation and test results. Rejected coating shall be removed and re-applied. Conditionally accepted coatings shall be made acceptable as directed by the Resident. The cost of additional testing and repairs shall be borne by the Contractor.

506.25 Dry Film Thickness

DFT shall be measured in accordance with SSPC-PA 2. The results shall be documented in the JCR. The JCR documentation shall include the actual gage readings, spot average and the location(s).

506.26 Coating Repairs and Touch-Up

Repairs and touch-up shall be done in accordance with the manufacturer's product data sheet and this Specification. Areas to be touched-up shall be prepared to assure proper adhesion of each coat. Each existing coat shall be feathered back to assure that each touch-up coat is continuous with each corresponding existing coat. Environmental conditions, cure times, and DFTs shall be in accordance with manufacturer's product data sheet for the coating being applied. Repairs to the topcoat shall be smooth and result in a uniform gloss and color match. The Resident shall have final authority concerning acceptable appearance.

506.27 Handling and Storage

No coating material, coating equipment, or cleaning equipment shall be stored within the limits of the toll plaza as directed by the Resident.

506.28 Observed Steel Defects

If any cracks or section loss in the existing steel are found during cleaning or painting operations, the Contractor shall immediately notify the Resident. The Contractor shall not work on the area in question until the Contractor has received the Resident's approval.

506.29 Through 506.69 Vacant

CONTAINMENT SYSTEM AND DISPOSAL OF HAZARDOUS MATERIALS

506.70 Description

The containment enclosure shall meet the criteria for Class 3P containment classification of SSPC Guide 6, Guide for Containing Debris Generated during Paint Removal Operations.

The Contractor shall comply with all applicable Local, State and Federal laws, ordinances, and rules and regulations relating to the prevention of and/or abatement of pollution. The Contractor shall use all necessary means to prevent new pollution of the environment (air, soil, and water) in the project area and the areas immediately adjacent to the project area.

506.71 Hazardous Materials

A Hazardous Waste Management Plan shall be prepared in accordance with Special Provision Section 506.08(E), Hazardous Waste Management Plan. Potential hazardous material and pollutants such as fresh paint, old paint chips, cleaning debris, chemicals, fuels, lubricants, bitumen, and any other harmful or toxic material shall be contained and disposed of in such manner and in such place as will conform with all applicable Local, State, and Federal regulations governing the disposal of such materials.

It shall be the Contractor's responsibility to provide documentation to the Resident that all hazardous or toxic materials were disposed of in an acceptable manner. The documentation shall consist of truck manifests, weigh-bills, or such other documentation that may be acceptable to the Resident. The documentation shall show the method and site used and the quantity of material disposed of.

Prior to starting the surface preparation and/or coating application, the Contractor shall submit the proposed containment and pollution control measures for the Resident's review. The proposal shall be sufficiently detailed to show that conformance with the requirements specified herein or elsewhere in the Contract will be achieved. See Special Provision 105.2.4.2, 506.08(D) and 506.08(E) for additional requirements.

Hazardous waste or toxic materials shall not be placed or accumulated on unprotected ground or released into waters of the State. Work areas shall be adequately shielded at all times to prevent dispersion of debris by wind or rain. All of the Contractor's equipment and storage areas used for the handling and storage of hazardous waste and hazardous materials shall be placed on an impervious surface in accordance with MaineDEP's Handbook for Hazardous Waste Generators. Any evidence of improper storage and handling shall be cause for immediate suspension of work in progress, and work will not be allowed until corrective actions are taken. Emergency procedures to be taken in the event of a release of hazardous material to the environment shall be part of the Contractor's Spill Prevention, Control and Countermeasures Plan that is required in accordance with Subsection 105.8.1 Temporary Soil Erosion and Water Pollution Control.

Non-compliance may expose the Contractor to fines assessed by DEP/EPA for failing to comply with Local, State, and Federal regulations. The Contractor shall not be granted additional Contract time for suspensions of work due to non-compliance.

506.72 Containment Enclosure

The Containment enclosure(s) shall meet the criteria for Class 3P containment classification of SSPC Guide 6, Guide for Containing Debris Generated during Paint Removal Operations and shall be in conformance with the requirements of this Section and Subsection 506.08(D), Containment and Environmental Plan.

The Contractor's choice of equipment or system used for the collection of the paint removal and cleaning debris will be reviewed by the Resident for health and safety, probable environmental impact, and to determine the suitability for the intended purpose.

Personnel working in a containment system may be exposed to health hazards. The Contractor shall be responsible for supplying adequate protection for all personnel required to be in the containment system. See Subsections 506.80 through 506.82 for specific requirements.

If the Resident deems emissions from the containment enclosure are unacceptable, all cleaning or painting operations shall cease until the problem is resolved.

Cleaning or painting materials, drips, or any form of construction debris from the cleaning and painting operations are not allowed to touch any vehicles of the traveling public. The Authority may restrict, prohibit, or require changes to the Contractor's means and methods if

in the Resident's judgment they will not be or by demonstration are not effective in protecting the traveling public.

506.74 through 506.79 Vacant

LEAD HEALTH PROTECTION

506.80 Description

The Contractor is fully responsible for the protection of their employees, their Subcontractor's employees, and Authority personnel and their representatives from exposure to hazardous materials under OSHA regulations.

If applicable, the Contractor shall include requirements specified in Subsections 105.2.4.2, Lead Paint, and 506.08(G), Health and Safety Plan, into the Health and Safety Plan submittal.

Typical work tasks that pose a lead exposure risk consist of, but are not necessarily limited to, welding, burning paint, flame cutting, abrasive blast cleaning, grinding, chipping, needle gun cleaning, lead burning, manual scraping and sanding, manual demolition of structures, heat gun cleaning, peening on existing structural steel, abrasive blast cleaning debris cleaning, using lead containing mortar, abrasive blasting enclosure movement and removal, power tool cleaning, lead removal equipment cleaning, decontamination trailer cleaning, rehabilitation of existing structural steel, gouging, and rivet busting.

All Projects where employee lead exposure without regard to the use of respirators, may exceed the action level, that is employee exposure to an airborne concentration of lead of 50 micrograms per cubic meter of air (50 μ g/m^3) averaged over an eight hour period (i.e., removal of paint containing lead, etc.) must have a decontamination facility and hand-wash facility on-site and available for use by the designated staff.

Authority personnel or their representatives shall be allowed access to each work site covered by the provisions of the Health and Safety Plan and shall be furnished upon request with such information and assistance by the Contractor as is required to make a complete and detailed inspection.

506.81 Materials

A. Protective Equipment: Respiratory protective equipment shall conform to 42 CFR Part 84, OSHA Standard for Lead in Construction 29 CFR Part 1910.134, and 29 CFR Part 1926.62. Protective clothing shall be in conformance with 29 CFR Parts 1910.132 and 1910.133. The minimum protective clothing required shall be head covering, coveralls (reusable or disposable clothing), gloves, dedicated work-boots or disposable over-boots, eye protection, hearing protection, and hardhat.

B. Hand-Wash Facility: The number of facilities to be provided will be dictated by the site(s) and approved by the Resident. Each facility shall be equipped with hot and cold clean water, hand soap or similar cleansing agents, individual hand towels or sections made of cloth or paper, warm air blowers or clean individual sections of

continuous cloth toweling which the workers will use to wash and dry their hands, face and exposed skin prior to eating, drinking, smoking or applying cosmetics. Each facility shall be located as close to the work site as physically possible. Ownership of and liability for the facility shall remain with the Contractor throughout the duration of the Project. The facility shall comply with 29 CFR Part 1926.51.

Any wastewater generated shall be filtered/treated to be acceptable to current state and/or local standards for discharge into the existing public wastewater system. Each facility shall be kept in a sanitary condition and clean as defined in the most recent OSHA requirements. At a minimum, the facility shall be cleaned after every shift in which it is used.

C. Decontamination Facility: Facility(s) shall comply with 29 CFR Part 1926.51. The number of facilities to be provided will be dictated by the site(s) and approved by the Resident. The facility shall be located as close to the work site as physically possible. If the Contractor is unable to locate the decontamination facility close to specific work area, a designated shuttle vehicle shall be provided. This vehicle shall be classified as contaminated and shall remain at the jobsite in the decontamination zone. The vehicle shall be operated and maintained to eliminate cross-contamination with the support zone. The vehicle shall be cleaned as defined in the most recent OSHA protocols. Ownership of and liability for the facility and shuttle vehicle shall remain with the Contractor throughout the duration of the Project.

Any wastewater generated shall be filtered/treated to be acceptable to current state and/or local standards for discharge into the existing public wastewater system.

506.90 Method of Measurement

Field Painting of Existing Steel shall be measured for payment by lump sum for the toll plaza work, complete, and accepted.

Surface Preparation of Existing Steel shall be measured for payment by lump sum for the toll plaza work, complete and accepted.

Containment System and Pollution Control Measures shall be measured for payment by the lump sum for the toll plaza work, consisting of all work previously described, completed, and accepted.

Disposal of Hazardous or Toxic Material shall be measured for payment by the lump sum for the toll plaza work, consisting of all material satisfactorily disposed of in conformance with these Specifications.

Lead Health Protection, if applicable, will not be measured for payment, and shall be incidental to the Contract.

506.91 Basis of Payment

The accepted quantity of Surface Preparation of Existing Steel will be paid for at the respective Contract lump sum price for the toll plaza work. Payment will be full compensation for furnishing all materials, labor, tools, equipment, scaffolding, QC inspections, and any other incidentals necessary for the satisfactory performance of the work.

All work for Field Painting of Existing Steel will be paid for at the Contract lump sum price for the toll plaza work. Payment will be full compensation for furnishing all materials, labor, tools, equipment, scaffolding, QC inspections, and any other incidentals necessary for the satisfactory performance of the work.

Containment System and Pollution Control Measures will be paid for at the Contract lump sum price for the toll plaza work. Payment will be full compensation for furnishing all materials, labor, tools, equipment, scaffolding, QC inspections, and any other incidentals necessary for the satisfactory performance of the work..

Disposal of Hazardous or Toxic Material will be paid for at the Contract lump sum price for the toll plaza work. Payment will be full compensation for all permits, tests, transportation, tipping fees, and any other incidentals necessary for the satisfactory performance of the above work.

Lead Health Protection, if applicable, will not be measured for payment, and shall be incidental to the Contract.

Partial payment of lump sum items as described in this 506 Specification may be made as lanes are completed as approved by Resident.

Payment will be made under:

Pay Item		Pay Unit
506.14	Field Painting of Existing Steel	Lump Sum
506.17	Surface Preparation of Existing Steel	Lump Sum
506.18	Containment System and Pollution Control Measures	Lump Sum
506.191	Disposal of Hazardous or Toxic Material	Lump Sum

SPECIAL PROVISION

SECTION 506

SHOP COATING APPLICATION

506.11 Description

This Specification covers the shop cleaning and painting of all new Falmouth Spur Toll Plaza Structure Canopy Support Columns and Canopy Structural Members for Lanes 1 and 2 including all connection components (plates, blocks, etc.).

The work shall consist of furnishing all supervisory personnel, competent person(s), labor, tools, equipment, Quality Control activities, materials, and incidentals necessary for satisfactory completion of the work.

506.12 Materials

Materials shall comply with the requirements of the respective Subsections of this Specification.

506.13 Submittals

The Contractor shall submit for review by the Authority a materials list and other such details as described within the Plans and the respective Subsections of this Specification.

506.15 Inspection

For the purpose of this Specification, the following definitions shall apply:

Quality Assurance Inspector (Q.A.I.): The Authority's authorized representative for shop inspection.

Quality Control Inspector (Q.C.I.): The Contractor's authorized representative for shop surface preparation and application.

Quality Control (Q.C.) is the responsibility of the Contractor. The Q.C.I. shall inspect all aspects of the work and shall supervise required testing. The Q.C.I. shall record measurements and test results in a Job Control Record (JCR). The Q.C.I. shall reject materials and workmanship that do not meet Contract requirements. The results of all testing shall be documented and a copy made available to the Q.A.I. on a daily basis or as requested by the Resident or Q.A.I.

The JCR shall include the following, as applicable:

- Surface Preparation Cleanliness and Anchor Profile – before application of the first or primer coat.
- Environmental Conditions – Ambient temperature, surface temperature, relative humidity, and dew point.

- Dry Film Thickness (DFT) – After the coating has cured and before the application of any subsequent coating.
- Type of testing equipment, model, serial number, and calibration data, if applicable.
- Type of application equipment.
- Coating batch and/or lot number, date of manufacture, and shelf life.
- Manufacturer's certification of conformance.
- Name(s) of applicator(s).
- Cure data, cure times, temperature, and relative humidity.
- Final inspection by the Q.C.I. and acceptance by the Resident or Q.A.I.

Quality Assurance (Q.A.) is the prerogative of the Authority. The Q.A.I. will ensure that the Q.C. is being performed properly, verify documentation, periodically inspect workmanship and witness testing. Q.A. testing deemed necessary by the Resident in addition to the minimum test requirements shall be scheduled to minimize interference with the production schedule.

506.16 Quality Assurance Inspector's Authority

The Q.A.I. will have the authority to reject material or workmanship that does not meet the Contract requirements. The acceptance of material or workmanship by the Q.A.I. will not preclude subsequent rejection, if materials or workmanship is found unacceptable, by other authorized representatives of the Authority.

506.17 Rejections

Rejected material or workmanship, as described above, shall be corrected or replaced by the Contractor at no additional cost to the Authority.

506.18 Contractor Qualification

Shop applied coating systems shall be applied in facilities holding a current AISC Sophisticated Paint Endorsement (SPE) or has been qualified in accordance with SSPC QP3-Standard Procedure for Evaluating Qualifications of Shop Painting Applicators.

All Contractor and Subcontractor SSPC certifications specified above shall be current and in-place prior to bid opening. The Contractor shall ensure that all required SSPC certifications are kept current throughout the duration of the Contract until final acceptance of the work. A copy of valid current certifications shall be transmitted with the Bid Package.

COATING SYSTEMS

506.30 Description

Work shall consist of the shop application of coating systems in accordance with the Plans and Specification. Each coat shall be applied in accordance with the manufacturer's product data sheet and this Specification.

506.31 Materials

SHOP COATING SCHEDULE

The following coating system shall be used. Alternately, an equivalent system may be proposed and used by the Contractor, subject to approval by the Authority:

Manufacturer:	The Sherwin Williams Company
Primer:	Corothane I Galvapac 1K zinc-rich primer
Intermediate:	Corothane I Ironox B moisture-cure urethane
Finish:	Corothane I HS moisture-cure urethane

All three coats of the paint system shall be contrasting colors as follows:

Primer:	Default by the manufacturer
Intermediate:	As approved by the Resident
Finish:	"Toll Booth Dark Blue": Color formula to be provided by the Resident

The Contractor shall provide a dried sample of the specified finish color to the Authority for approval prior to the batching of the finish coat. Sample size, shape, and material shall be agreed upon with the Resident prior to submission.

The Contractor shall provide the paint batch description, lot number, date of manufacture, shelf life, and the manufacturer's published storage requirements to the Resident. The Contractor shall provide the manufacturer's product data sheet for each coating. The product data sheets shall include the manufacturer's recommended requirements for the equipment, surface cleanliness, mixing, thinning, application, environmental conditions, touch-up/repair procedures, and cure times for the entire range of allowable environmental conditions. All product data sheets and MSDS shall be submitted to the Resident for approval prior to initiating any coating work.

The product data sheets shall also provide the minimum and maximum recoat times for the primer and intermediate coat over the expected range of temperatures, relative humidity, and range of acceptable dry film thicknesses. The manufacturer's product data sheets at the time of submission shall be those used during the duration of the Project. Newly published product data sheets may be substituted as approved by the Resident.

506.32 Limits of Work

All new Falmouth Spur Toll Plaza Structure Canopy Support Columns and Canopy Structural Members for lanes 1 and 2 including all connection components (plates, blocks, etc.).

The faying surfaces of bolted connections shall be painted with one coat of the zinc-rich primer meeting the AASHTO/RCSC requirements for Class B slip-critical connections. This coat shall not exceed the maximum thickness nor fail to meet the minimum cure time specified on the manufacturer's product data sheet. Both surfaces of bolted connections shall be masked

off within two inches of bolt holes after application and curing of the primer for subsequent coating application. Areas required to be field painted after welding and bolting is complete shall meet the application requirements of Subsection 506.36 Coating Repairs and Touch-up.

506.33 Surface Preparation

Prior to abrasive blast cleaning, all corners and edges of members and plates, whether rolled cut or sheared, exposed in the assembled product shall be rounded to approximately an 1/8 inch radius. A series of tangents to the approximate radius will be considered as a rounded. The Contractor shall prepare a plate approximately 2 inch x 12 inch with the appropriate rounded corner and edge. The Q.C.I. and Q.A.I. shall agree upon the acceptability of the corner preparation and the plate shall become the Job Standard. The plate shall remain the property of the Contractor.

Surfaces to be coated shall be abrasive blast cleaned to meet the requirements of SSPC-SP 10/NACE No. 2 or the coating manufacturer's published recommendations, whichever is the more stringent. SSPC-VIS 1 shall be used to determine acceptable cleanliness. The Q.C.I. and Q.A.I. shall evaluate the first piece using VIS 1 as a comparator. No further blast cleaning shall be done until the Q.C.I. and Q.A.I. agree upon the acceptable Job Standard for cleanliness. If more than one method of abrasive blast cleaning is used (e.g., centrifugal blast and compressed air), the acceptable Job Standard shall be established for each method. At the Contractor's option, a sample piece may be abrasive blast cleaned and sealed with a clear coating to preserve the surface preparation and the sample piece may be used as a comparator to establish the agreed upon Job Standard.

After abrasive blast cleaning, the surface shall be visually inspected for fins, tears, delaminations and other discontinuities. Fins, tears and other discontinuities shall be removed with a grinder or other suitable power tool and the area shall be blended at a slope of approximately 1:20. The affected area(s) shall be abrasive blast cleaned to develop an acceptable anchor profile.

The anchor profile shall meet the requirements of the coating manufacturer's published recommendations. The blast media shall contain enough grit to provide an angular anchor profile. The anchor profile shall be measured in accordance with ASTM D 4417 Method C. If the anchor profile fails to meet the minimum requirements, the Contractor shall re-blast the substrate until the minimum required anchor profile is achieved. If the anchor profile exceeds the maximum allowed in the manufacturer's published recommendations, the substrate shall be coated only with the approval of the Resident.

The Q.C.I. shall measure the anchor profile of the substrate on each plane of the first piece and each additional piece with a significant change in size or geometry. The Q.A.I. will witness the testing. After it has been established to the satisfaction of the Resident, that the abrasive blast equipment is capable of providing uniform, acceptable surface preparation, a diminished degree of testing may be agreed upon by the Q.C.I. and Q.A.I. The Quality Assurance Inspector may require that the anchor profile be measured and recorded on any surface that is, in the judgment of the Quality Assurance Inspector, unacceptable. Failure to measure anchor profile as required will result in rejection of the surface preparation on the piece in question.

If there is a significant change in surface cleanliness or anchor profile due to blast media degradation or other reasons, the Contractor shall cease the blast operation until corrective action is taken.

If compressed air is used for abrasive blast cleaning, a blotter test shall be performed in accordance with ASTM D 4285 at the beginning of each shift and at any other time the Q.A.I. directs it. The Q.C.I. and Q.A.I. shall be present to witness the blotter test.

The allowable time between abrasive blast cleaning and primer application shall not exceed the manufacturer's published recommendations or eight-hours, whichever is less. If the substrate develops flash rust (rust bloom) before the primer is applied or before the primer application is completed, the piece shall be re-blasted to bare substrate and re-coated.

506.34 Application

All protective coating shall be applied using either conventional or airless spray equipment meeting the manufacturer's published recommendations. Striping and touchup of areas less than 36 in^2 may be applied by other methods with the approval of the Resident. Protective coating shall not be applied when the ambient temperature in the immediate vicinity of the piece(s) in question is above 90˚F or below 40˚F. Thinning and mixing of coatings shall be in conformance with the manufacturer's published instructions. Thinner shall be measured using a graduated cup or other container that clearly indicates the amount of thinner being added. Mixing shall be done using the method, equipment and for the amount of time recommended by the coating manufacturer.

Primer, intermediate, and top coat shall be applied in accordance with the manufacturer's published recommendations. Environmental conditions in the immediate vicinity of the surfaces to be coated shall be within the range of the manufacturer's published requirements both during the coating operation and during the curing period. Primer shall not be force-cured.

Environmental conditions shall be measured by the Q.C.I. in the immediate vicinity of the surfaces to be coated. The Q.A.I. may perform environmental testing in addition to the testing performed by the Q.C.I. If there are significant differences between the test results, the differences shall be resolved or explained to the satisfaction of the Resident prior to coating application. The results of the environmental testing shall be recorded in the JCR.

Corners, fasteners, welds and inaccessible locations shall be striped in accordance with SSPC-PA 1. The Contractor shall meet the minimum Dry Film Thickness (DFT) requirements on all surfaces. The Contractor may stripe with the intermediate coat if approved by the Resident.

Recoat time shall be in accordance with the manufacturer's published requirements for the environmental conditions at the time of application and cure. If the coating is contaminated with dust, debris, over spray or other deleterious material, the surface shall be cleaned in accordance with SSPC-SP 1 immediately prior to recoating. Other methods of cleaning may be used if approved by the Resident.

The Q.A.I. shall be given ample notice in order to inspect the product prior to coating, recoating or removal of paint from the area. "Ample notice" shall be defined at the Pre-Job meeting depending on shop or site conditions.

Substrates that are primed or surfaces that are recoated without notification of the Q.A.I. will be rejected and no further coating shall be done on the piece. Coating applied without notification of the Q.A.I. will be investigated by destructive and non-destructive testing as approved by the Resident and by a review of the JCR. The Resident may reject, conditionally accept, or accept the coating based on documentation and test results. Rejected coating shall be removed and re-applied. Conditionally accepted coatings shall be made acceptable as approved by the Resident. The cost of additional testing and repairs shall be borne by the Contractor.

506.35 Dry Film Thickness

DFT shall be measured in accordance with SSPC-PA 2. The results shall be documented in the JCR. The JCR documentation shall include the actual gage readings, spot average and the location(s).

506.36 Coating Repairs and Touch-up

Touch-up shall be done in accordance with the manufacturer's product data sheet and this Specification. Areas to be touched-up shall be prepared to assure proper adhesion of each coat. Each existing coat shall be feathered back to assure that each touch-up coat is continuous with each corresponding existing coat. The top-coat shall be smooth and uniform in appearance.

Damaged or unacceptable coatings shall be repaired using the same coating system. Environmental conditions cure times, and DFTs shall be in accordance with manufacturer's product data sheet for the coating being applied. Repairs to topcoat shall result in a uniform gloss and color match. The Resident shall have final authority concerning acceptable appearance.

506.37 Handling and Storage

The coating shall be adequately cured before handling, but under no circumstances shall the product be handled before the coating has achieved the manufacturer’s published minimum cure time. Coated steel members shall be handled in a manner to avoid damage to the coating. Members shall be lifted and moved using non-metallic slings, padded chains and beam clamps, softeners or other non-injurious methods. Material shall be stored, both at the coating facility and in the field, in a manner that prevents damage to the coating.

Material shall not be loaded for shipment until the shop coating has adequately cured and been inspected. The components will be stamped "APPROVED" only after the loading has been completed and approved, and no material shall be shipped without the prior approval of the Resident.

Damage to the coating that is discovered after the product is loaded for shipment to the jobsite shall be documented by the Q.C.I. Repairs shall not be made unless the damaged area is repaired in accordance with Subsection 506.26 Coating Repairs and Touch-up. Repairs that cannot be acceptably done on the truck shall be done in the shop or in the field at the Contractor’s option.

HOT-DIP GALVANIZING

506.40 Description

This work shall consist of surface preparation and application of hot-dip galvanizing in accordance with the Plans and this Specification. Hot-dip galvanizing shall meet the requirements of AASHTO M 111/ASTM A 123, Standard Specification for Zinc (Hot-Dip Galvanized) Coatings on Iron and Steel (A 123), including any applicable requirements listed in Section 2-Referenced Documents. The minimum average coating thickness grade shall conform to Table 1. The frequency of testing shall be in accordance with Section 6. The choice of the test method is the prerogative of the Contractor. Record the test results and provide them to the Department. Provide certification of compliance and written test results to The Department in accordance with A 123 -Section 10.

506.41 Surface Preparation

Abrasive blast-clean the steel to a minimum of SSPC-SP 6, Commercial Blast Cleaning (SP 6) prior to galvanizing. Grind all corners exposed in the assembled product to a 1/16 inch radius prior to galvanizing.

506.42 Repairs

Repairs to galvanizing shall be in accordance with ASTM A 780, Standard Practice for Repair of Damaged and Uncoated Areas of Hot-Dip Galvanized Coatings (A 780), Annex A1 or A3. Zinc-rich paints for repairs may only be used with approval of the Fabrication Engineer.

506.43 Top-coating Galvanized Surfaces

Areas of galvanized surfaces to be top-coated will be described on the Plans or in the Special Provisions.

Do not use chromate quenching or other types of quenching after galvanizing. Remove runs, sags, dross and other deleterious material from surfaces to be painted. Provide a smooth uniform surface, free of heavy build areas or other discontinuities that will project through the finish coat. Perform repairs to galvanizing in accordance with A 780. Remove visible surface contaminants in accordance with SSPC-SP 1, Solvent Cleaning (SP 1) prior to blast cleaning. Blast-clean surfaces to be coated in accordance with SSPC-SP 7/NACE No.4-Brush-Off Blast-Cleaning (SP 7). Measure the anchor profile in accordance with ASTM D 4417 Method C (replica tape). Record the results in a manner acceptable to the Fabrication Engineer. Assure that the anchor profile corresponds with the anchor profile requirements on the Manufacturer's Product Data Sheet.

506.92 Method of Measurement

Shop Coating of New Steel shall be measured for payment by lump sum for the toll plaza work, complete, and accepted. The limits shall be as described within these Specifications.

506.93 Basis of Payment

All work for Shop Coating of New Steel will be paid for at the Contract lump sum price for the toll plaza work. Payment will be full compensation for furnishing all material, labor, equipment, and incidentals necessary for the satisfactory performance of the work.

Payment will be made under:

Pay Item		Pay Unit
506.15	Shop Coating of New Steel	Lump Sum

SPECIAL PROVISION

SECTION 508

MEMBRANE WATERPROOFING

508.01 Description

The second sentence of the first paragraph is deleted and replaced with the following:

When high performance waterproofing membrane is specified, the Contractor shall furnish and install an approved high performance waterproofing membrane to the concrete deck with a heat welded membrane system applied in accordance with the Plans, Specifications and the manufacturer's published recommendations.

508.02 Materials

The first sentence of the first paragraph is deleted and replaced with the following:

When high performance waterproofing membrane is specified, the materials shall meet the requirements of the manufacturer and shall be one of the approved heat welded products on the MaineDOT's Prequalified List of Approved Materials for High Performance Waterproofing Membrane.

SPECIAL PROVISION

SECTION 511

COFFERDAMS

(Temporary Earth Support Systems)

Section 511, Cofferdams, is deleted in its entirety and replaced with the following:

511.01 Description

This work shall consist of the complete design, construction, maintenance and removal of all temporary earth support systems including, but not necessarily limited to, cofferdams, caissons, cribs and sheeting, and other related work, including dewatering, required to allow for the excavation of foundation pits; to permit and protect the construction of structural units; to allow for the demolition and/or construction of concrete abutments, piers, foundations, wingwalls, headwalls, and culverts; removal and/or construction and maintenance of approach roadways; and any other work requiring temporary earth support mandated by OSHA, Subpart P, Excavation Requirements, or required for the maintenance of traffic. The temporary earth support systems shall meet all of the applicable requirements of the Standard Specifications.

Temporary earth support structures shall be specified as Cofferdam(s) when it is determined a temporary earth support structure will be required to keep high ground water, stream, river, pond, lake or ocean tidal waters out of the excavation so the identified substructure unit can be constructed in the dry. The locations of Cofferdam(s) will be shown on the Plans. Cofferdam(s) may or may not require seal concrete.

All other temporary earth support structures shall be specified as Temporary Earth Support Structures. Temporary earth support structures may require pumping or dewatering to complete the Project work. The locations of temporary earth support structures may, or may not, be shown on the Plans whether required for the completion of the Contract or not. Temporary earth support structures do not require seal concrete.

511.02 Materials

A minimum of three (3) weeks prior to the start of work, the Contractor shall submit the proposed method of temporary earth support systems for review and approval. The submission shall include working drawings and list the type and size of the proposed support, details of construction, calculations and a sequence of operations all of which shall be designed and sealed by a Professional Engineer licensed in the State of Maine. This Professional Engineer may be directly employed or otherwise retained by the Contractor. Working drawings shall consist of plan views and cross sections to illustrate clearances, limits, and retainment heights as applicable at roadway cuts, cofferdams, abutment footings, and phased construction areas. Construction shall not be started on temporary earth support systems until such submittals are approved. Approval of the submittals shall not relieve the Contractor of the responsibility for the satisfactory functioning of the temporary earth support systems.

The temporary earth retaining structures shall be designed to support all appropriate combinations of earth, water, and surcharge loads (from traffic, construction equipment, material stockpiles, and other sources) imposed on the systems during all phases of construction. The Contractor's design shall consider the means and methods and construction sequencing proposed by the Contractor. The Contractor is responsible for selecting an appropriate factor of safety for the Temporary Earth Retaining Structures. The factor of safety and maximum applied loads are resistances used for the design shall be clearly stated on the submitted calculations.

Prior to excavating or loading the temporary earth support systems, the Professional Engineer responsible for the design of the temporary earth support systems shall provide after inspection of the systems a sealed certification to the Resident that the systems were erected in conformance with the Professional Engineer's Plans and design details.

The submission shall also show the Contractor's proposed method of excavation, water diversion and dewatering methods (sumps, wells, seal concrete, or well points) to minimize the flow of groundwater into the excavation. Such methods should preserve the undisturbed condition of the subgrade and permit foundation construction in-the-dry.

Seal concrete shall conform to the requirements of Class S Concrete. Where seal concrete is required to have a steel reinforcing mat, the steel reinforcement shall conform to ASTM A615, Grade 60.

511.03 Temporary Earth Support System Construction

Temporary earth support systems shall, in general, be carried well below the elevation of the bottom of footings or approach slabs, and shall be well braced and watertight. In cases where pile foundations contain batter piles, the temporary earth support system shall be installed to accommodate without obstruction the proper placement and alignment of the batter piles, either by staggering the depth of the support system or by increasing the annulus between the foundation and the support system. Unless it is contemplated that a concrete foundation seal will be placed under water, the interior dimensions of temporary earth support systems shall be such as to give sufficient clearance for the construction and inspection of forms and to permit pumping outside of forms. Exterior dimensions of the temporary earth support system shall be limited to the size shown on the Plans or those illustrated in the Project permits, whichever is more stringent.

During the placing of seal concrete, the elevation of the water inside the temporary earth support systems shall be controlled to prevent any flow through the concrete.

Temporary earth support systems shall be constructed to protect fresh concrete against damage from the sudden rising of the water body and to prevent damage by erosion.

Temporary earth support systems, including all sheeting and bracing involved, shall be removed after the completion of the substructure unless otherwise noted on the Contract Drawings; care being taken not to disturb or otherwise injure the finished masonry. No timber or bracing shall be used in temporary earth support systems in such a way as to remain in the substructure masonry.

At bridge approaches where phased construction results in close confinement of the temporary earth support systems to the existing and new roadways, a lateral support device shall be designed and installed atop the concrete approach slab for the purpose of preventing undermining and/or settlement of the newly constructed roadway. Lateral support systems shall be designed and positioned so as to provide lateral rigidity to the completed roadway during Phase II construction, while preventing any reflection of the device through the pavement above. The design, details, and sketches of the permanent lateral support device shall be presented as part of the Contractor's submissions for Temporary Earth Support Systems. Removal of the lateral support device shall not require additional phases of construction nor compromise the integrity of the roadway. At the Contractor's option, the lateral support device may be left in place with the approval of the Resident.

511.04 Pumping

Pumping from the interior of any foundation enclosure shall be done in such a manner as to prevent any current of water that would carry away or segregate the concrete.

Pumping to dewater a sealed temporary earth support system shall not commence until the seal concrete has set sufficiently to withstand the hydrostatic pressure. In no case will pumping be permitted until a minimum of five (5) days has elapsed since the completion of the installation of the seal concrete, when the temperature of the water body outside the temporary earth support system is greater than 4°C [40°F], or a minimum of seven (7) days has elapsed since the completion of the installation of the seal concrete, when the temperature of the water body outside the temporary earth support systems is less than 4°C [40°F].

Sediment laden water will not be allowed to leave the Project area. The Contractor shall be required to install appropriate erosion and sedimentation control devices as approved by the Resident. Erosion and sedimentation control devices may include plain riprap, haybales, silt fence and sedimentation basins.

All water and materials pumped from excavation shall be pumped into a sedimentation basin which is of sufficient volume to detain the pumped water and materials. The water and materials removed from the excavation shall be pumped at a rate that permits infiltration of the water into the earth, preventing any overland flow or direct discharge into a stream or other waterbody.

511.05 Method of Measurement

Temporary Earth Support Systems, with the exception of Cofferdams, shall be measured for payment as one lump sum per Contract, regardless of the number of Temporary Earth Support structures required at the Project site or sites, which price shall include full compensation for design, furnishing materials, excavation beyond the pay limits, installation, removal, tools, equipment and labor necessary to construct, maintain and remove the work in accordance with the Plans or as called for in the Contract.

If Temporary Earth Support Systems is not required due to the acceptance of a Value Engineering Proposal in accordance with Subsection 109.6, the cost of the deleted Temporary Earth Support Systems shall be included as part of the Value Engineering Proposal.

Cofferdam shall be measured for payment as one lump sum per location identified on the Plans, which price shall include full compensation for design, furnishing materials, excavation beyond the pay limits, installation, removal, tools, equipment and labor necessary to construct, maintain and remove the work in accordance with the Plans or as called for in the Contract. When cofferdams remain as permanent countermeasures against scour, removal of the unused section of sheet pile above the cut-off line shall be included in the lump sum payment.

If Cofferdam is not required due to the acceptance of a Value Engineering Proposal in accordance with Subsection 109.6, the cost of the deleted Cofferdam shall be included as part of the Value Engineering Proposal.

511.06 Basis of Payment

The accepted quantity of Temporary Earth Support Systems will be paid for at the Contract lump sum price, per Contract, for the respective Temporary Earth Support Systems.

When required, the elevation of the bottom of footing of any substructure unit may be lowered, without change in the price to be paid for Temporary Earth Support Systems. However, if the average elevation of more than 25 percent of the area of the excavation is more than three (3) feet below the elevation shown on the Plans, and if requested by the Contractor, then the entire cost of the Temporary Earth Support Systems will be paid in accordance with Subsection 109.7, Equitable Adjustments to Compensation, instead of the Contract lump sum price.

All costs of constructing, maintaining and removing sedimentation basins; water testing; and pumping or transporting water and other materials to the sedimentation basin will not be measured separately for payment, but shall be incidental to the Temporary Earth Support Systems item.

All costs of related temporary soil erosion and water pollution controls, including inspection and maintenance, will not be measured separately for payment, but shall be incidental to the Temporary Earth Support Systems item.

All costs of lateral support devices installed in support of phased construction at the bridge approaches, will not be measured separately for payment, but shall be incidental to the Temporary Earth Support Systems item.

When required, the elevation of the bottom of footing of any substructure unit may be lowered, without change in the price to be paid for Cofferdam. However, if the average elevation of more than 25 percent of the area of the excavation is more than three feet below the elevation shown on the Plans, and if requested by the Contractor, then the entire cost of the Cofferdam will be paid in accordance with Subsection 109.7, Equitable Adjustments to Compensation, instead of the Contract lump sum price.

All costs relating to the furnishing and placing of seal concrete will be paid under Pay Item 502.249, Structural Concrete Piers – Seal Concrete (placed under water), pay unit lump sum.

All costs relating to the excavation of earth material to facilitate construction of Temporary Earth Support Systems and Cofferdams, and placement of structural concrete will be

paid under Pay Item 206.08, Structural Earth Excavation – Major Structures, pay unit cubic yard; or Pay Item 206.10, Structural Earth Excavation – Piers, pay unit cubic yard, as applicable.

All cost of constructing, maintaining and removing sedimentation basins; water testing; and pumping or transporting water and other materials to the sedimentation basin will not be measured separately for payment, but shall be incidental to the Cofferdam item(s).

All costs of related temporary soil erosion and water pollution controls, including inspection and maintenance, will not be measured separately for payment, but shall be incidental to the Cofferdam item(s).

Payment will be made under:

Pay Item		Pay Unit
511.091	Temporary Earth Support Systems	Lump Sum

SPECIAL PROVISION

SECTION 515

PROTECTIVE COATING FOR CONCRETE SURFACES

(Pigmented Concrete Protective Coating)

This Section is deleted in its entirety and replaced with the following:

515.01 Description

The work shall include the surface preparation and application of a pigmented concrete protective coating system to protect new and existing concrete and masonry structures. The coating system shall be applied to existing island concrete to remain including but not limited to bumpers, booth enclosures and curtain walls in accordance with the Plans, Specifications and the manufacturer's published recommendations.

515.02 Materials

The pigmented penetrating sealer system shall be a two coat system consisting of Certi-Vex Guard and Certi-Vex Envio Smooth VOC, as manufactured by Vexcon Chemicals, Inc., or an approved equal, consisting of the following two parts:

- The primer shall be a vinyl toluene acrylic silane polymer blend or an approved equal. This primer shall provide the main protection against the ingress of water borne chlorides and sulfates.

- The top coat shall be solvent borne modified acrylic resins with selected pigments and fillers.

The product shall comply with regulations limiting the Volatile Organic Compound (VOC) content of architectural and industrial maintenance coatings.

The Contractor shall submit the Vexcon Chemical's product data sheets, material safety data sheets and recommended instructions for application of the Certi-Vex Guard and Certi-Vex Envio Smooth VOC.

The pigmented penetrating sealer color shall be Concrete Gray.

Materials shall be delivered to the site in original packages or containers bearing the manufacturer's labels and identification.

515.021 Substitute Materials

The Contractor shall submit a written request for approval of proposed substitute material naming the proposed manufacturer and product. This request shall be accompanied by:

1. Test data from an independent testing laboratory stating that the proposed substitute meets or exceeds the specified requirements as listed and has been tested in accordance with the specified test standards.

2. Documentation that the proposed material has a proven record of performance when used in the intended application as confirmed by actual field tests and successful installations in place on at least five similar projects.

3. Certification that if two or more types of products are intended to be used as part of a system they will be supplied by the same manufacturer to ensure compatibility of materials, and to maintain single source manufacturer responsibility.

The Resident reserves the right to require additional testing to evaluate any proposed substitute product at no additional cost to the Authority. The Resident's decision as to the acceptability or non-acceptability of the proposed product shall be final.

515.03 Surface Preparation

All caulking, patching, and joint sealant shall be installed prior to application of the sealer. The surface shall be prepared in strict accordance with the instructions of the approved manufacturer. Surface shall be fully cured, dry, and free from contamination such as asphalt coatings, oil, grease, loose particles, decaying matter, moss, algae growth, and curing compounds. For maximum penetration of the primer, the Contractor shall lightly sandblast the surface.

Existing form tie hole plugs which are loose or deteriorated shall be completely removed. The holes shall be reamed to sound concrete. All open form tie holes, new and existing shall be filled with an approved non-shrinking mortar, and after setting, rubbed level to the adjacent surface. Filled holes shall be cured for at least two (2) days prior to the application of the concrete protective coating.

The Contractor may use, when required, appropriate cleaning materials recommended by the sealer manufacturer in conjunction with high pressure water for cleaning the concrete or masonry.

Grass and vegetation adjacent to surfaces to be coated shall be removed or trimmed closely to permit proper preparation and application of the coating.

515.04 Application

The materials shall be mixed and applied in strict accordance with the instructions of the approved manufacturer. Spray or roll the primer at the recommended application rate. If the surface is very absorbent, the primer should be applied until surface is saturated per the manufacturer’s written instructions. All areas not to receive coating shall be marked with straight, even lines as the limit lines.

The Contractor shall, in the presence of the Resident, apply the materials on a sample area which is representative of a jobsite application. When color and application methods are approved, the sample area shall serve as a standard of acceptance for all further work.

The primer shall not be applied in direct sunlight when the air or surface temperature is greater than 90°F, or when air or surface temperature is below 35°F. The top coat shall not be applied when air or surface temperature is below 40°F or as approved by the Resident.

The primer shall be allowed to dry for a minimum of two-hours before applying pigmented top coat. Under poor drying conditions this time shall be extended. The primer shall not be coated with top coat until the surface is dry. The top coat should be applied by brush, roller or suitable airless spray.

Top coat material shall be applied per the manufacturer's recommended application rate and in strict accordance with the manufacturer's written instructions. The top coat shall provide consistent color without light spots or shadows. The Resident reserves the right to have the Contractor recoat the top coat if the dried top coat(s) lack consistent color or show light spots or shadows.

Protect plants, grass, sealant, asphalt, traffic, etc. during application from spray.

515.05 Method of Measurement

Pigmented Concrete Protective Coating will be measured for payment by the square yard, satisfactorily applied and accepted.

515.06 Basis of Payment

Pigmented Concrete Protective Coating will be paid at the Contract unit price per square yard which price shall be full compensation for all labor, materials, equipment and incidentals required for furnishing and applying the pigmented concrete protective coating as shown on the Plans, in accordance with these Specifications or as approved by the Resident.

Surface preparation, vegetation removal, and protection of surfaces not designated for treatment will not be paid for separately, but shall be incidental to the Pigmented Concrete Protective Coating item.

Payment will be made under:

Pay Item		Pay Unit
515.201	Pigmented Protective Coating for Concrete Surfaces	Square Yard

SPECIAL PROVISION

SECTION 515

PROTECTIVE COATING FOR CONCRETE SURFACES

(Pigmented Concrete Protective Coating – Tunnel Walls and Ceiling)
(Pigmented Concrete Protective Coating – Tunnel Floor)

This Section is deleted in its entirety and replaced with the following:

515.01 Description

The work shall include the surface preparation and application of a pigmented concrete protective coating system to protect new concrete and masonry structures. The coating system shall be applied to the interior walls, ceiling, and the floor of the precast concrete tunnel in accordance with the Plans, Specifications and the manufacturer's published recommendations.

515.02 Materials

For Walls and Ceiling:

The pigmented concrete protective coating system shall consist of Drylok Masonry Waterproofing, as manufactured by UGL, or an approved equal, consisting of the following:

- One primer coat of latex-based Drylok masonry waterproofer. Color: White.
- One finish coat of latex-based Drylok masonry waterproofer. Color: White.

For Floors:

The pigmented concrete protective coating system shall consist of Drylok Concrete Floor Paint, as manufactured by UGL, or an approved equal, consisting of the following:

- One primer coat of latex-based Drylok concrete floor paint. The floor paint shall be brush applied per manufacturer's instructions to provide a non-skid surface. Color: Gray ("Gull").
- One finish coat of latex-based Drylok concrete floor paint. The finish coat shall be brushed or roller applied per manufacturer's instructions to provide a non-skid surface. Color: Gray ("Gull").

The products shall comply with regulations limiting the Volatile Organic Compound (VOC) content of architectural and industrial maintenance coatings.

The Contractor shall submit the UGL product data sheets, material safety data sheets and recommended instructions for application of the coating products.

Materials shall be delivered to the site in original packages or containers bearing the manufacturer's labels and identification.

515.021 Substitute Materials

The Contractor shall submit a written request for approval of proposed substitute material naming the proposed manufacturer and product. This request shall be accompanied by:

1. Test data from an independent testing laboratory stating that the proposed substitute meets or exceeds the specified requirements as listed and has been tested in accordance with the specified test standards.

2. Documentation that the proposed material has a proven record of performance when used in the intended application as confirmed by actual field tests and successful installations in place on at least five similar projects.

3. Certification that if two or more types of products are intended to be used as part of a system they will be supplied by the same manufacturer to ensure compatibility of materials, and to maintain single source manufacturer responsibility.

The Resident reserves the right to require additional testing to evaluate any proposed substitute product at no additional cost to the Authority. The Resident's decision as to the acceptability or non-acceptability of the proposed product shall be final.

515.03 Surface Preparation

All caulking, patching, and joint sealant shall be installed prior to application of the concrete protective coating system. The surface shall be prepared in strict accordance with the instructions of the approved manufacturer. Surface shall be fully cured, dry, and free from contamination such as asphalt coatings, oil, grease, loose particles, decaying matter, moss, algae growth, and curing compounds.

The Contractor may use, when required, appropriate cleaning materials recommended by the coating manufacturer for cleaning the concrete or masonry.

515.04 Application

The materials shall be mixed and applied in strict accordance with the instructions of the approved manufacturer. Brush or roll the coatings at the recommended application rate.

The Contractor shall, in the presence of the Resident, apply the materials on a sample area which is representative of a jobsite application. When color and application methods are approved, the sample area shall serve as a standard of acceptance for all further work.

The coatings shall not be applied in direct sunlight when the air or surface temperature is greater than 90°F, or when air or surface temperature is below 35°F. The coatings shall not be applied when air or surface temperature is below 40°F or as approved by the Resident.

The primer coat shall be allowed to dry for a minimum of eight-hours before applying the finish coat. Under poor drying conditions this time shall be extended. The finish coat shall not be applied until the primer coat is dry. The finish coat should be applied by brush or roller.

The finish coat material shall be applied per the manufacturer's recommended application rate and in strict accordance with the manufacturer's written instructions. The finish coat shall provide consistent color without light spots or shadows. The Resident reserves the right to have the Contractor recoat the finish coat if the dried finish coat(s) lack consistent color or show light spots or shadows.

Protect walls, ceiling, and utilities during application of the final coat from splatter.

515.05 Method of Measurement

Pigmented Concrete Protective Coating will be measured for payment by the square yard of final coated surface, satisfactorily applied and accepted. The quantity of primer coat and finish coat will not be measured separately.

515.06 Basis of Payment

Pigmented Concrete Protective Coating will be paid at the Contract unit price per square yard which price shall be full compensation for all labor, materials, equipment and incidentals required for furnishing and applying the pigmented concrete protective coating as shown on the Plans, in accordance with these Specifications or as approved by the Resident.

Surface preparation, and protection of surfaces not designated for treatment will not be paid for separately, but shall be incidental to the Pigmented Concrete Protective Coating item.

Payment will be made under:

Pay Item		Pay Unit
515.2011	Pigmented Concrete Protective Coating -Tunnel Walls & Ceiling	Square Yard
515.2012	Pigmented Concrete Protective Coating – Tunnel Floor	Square Yard

SPECIAL PROVISION

SECTION 515

PROTECTIVE COATING FOR CONCRETE SURFACES

(Clear Concrete Protective Coating)

This Section is deleted in its entirety and replaced with the following:

515.01 Description

The work shall include the surface preparation and application of a clear protective coating on concrete surfaces to protect new and existing cast-in-place concrete, precast concrete and masonry structures. The coating system shall be applied to all exposed island, bumpers, curbs, fascia, barriers, pedestals and other exposed concrete surfaces in accordance with the Plans, Specifications and the manufacturer's published recommendations.

515.02 Materials

The penetrating sealer shall be Stand Off SLX100 Water & Oil Repellent, as manufactured by ProSoCo, Inc., or an approved equal. The sealer shall have the following properties:

Active Substance:	modified alkyl alkoxy silane
Active Content:	> 90%
Form:	clear liquid
VOC:	< 3.5 pounds per gallon

The product shall comply with regulations limiting the Volatile Organic Compound (VOC) content of architectural and industrial maintenance coatings.

The Contractor shall submit the ProSoCo's product data sheets, material safety data sheets and recommended instructions for application of the Stand Off SLX100.

Materials shall be delivered to the site in original packages or containers bearing the manufacturer's labels and identification.

515.021 Substitute Materials

The Contractor shall submit a written request for approval of proposed substitute material naming the proposed manufacturer and product. This request shall be accompanied by:

1. Test data from an independent testing laboratory stating that the proposed substitute meets or exceeds the specified requirements as listed and has been tested in accordance with the specified test standards.
2. Documentation that the proposed material has a proven record of performance when used in the intended application as confirmed by actual field tests and successful installations in place on at least five similar projects.

3. Certification that if two or more types of products are intended to be used as part of a system, they will be supplied by the same manufacturer to ensure compatibility of materials, and to maintain single source manufacturer responsibility.

The Resident reserves the right to require additional testing to evaluate any proposed substitute product at no additional cost to the Authority. The Resident's decision as to the acceptability or non-acceptability of the proposed product shall be final.

515.03 Surface Preparation

All caulking, patching, and joint sealant shall be installed prior to application of the sealer. On new surfaces to be treated, all voids shall be dressed by dry rubbing to remove form marks and blemishes to present a neat appearance. Concrete and masonry surfaces shall be cleaned free of dust, surface dirt, oil, efflorescence and contaminants to ensure penetration of the sealer. The surface may be slightly damp at the time of treatment.

The Contractor may use, when required, appropriate cleaning materials recommended by the sealer manufacturer in conjunction with high pressure water for cleaning the concrete or masonry.

515.04 Application

The Contractor shall apply the clear concrete protective coating in strict accordance with the manufacturer's published recommendations.

The application shall not be conducted when surface and air temperatures are below 40°F or above 100°F. The work shall not be conducted when there is a chance of the surface temperature falling below 40°F in the 24-hours following application.

The treatment shall not be applied during rain to wet surfaces or when there is a chance of rain within 24-hours after application. After treatment, surfaces should be protected from rain for not less than 48-hours. It shall not be applied when winds are sufficient to carry airborne chemicals to unprotected surfaces.

Prior to applying the sealer, the Contractor shall protect all surrounding non-masonry/non-concrete surfaces, landscape and lawn areas, and surfaces not designated for treatment, from contact with the penetrating sealer, and prevent overspray of the penetrating sealer caused by wind drift.

The Contractor shall ensure that all safety equipment, facilities and precautions recommended by the product manufacturer are furnished and/or strictly adhered to.

The sealer material shall be applied in the manner and with the equipment recommended by the product manufacturer. Coverage will vary depending on condition, texture and porosity of the surfaces. Pre-testing is required.

Sealer shall be applied as packaged without dilution or alteration. The sealer shall be applied with low pressure (20 psi) airless spray equipment or with a heavily saturated brush or

roller unless otherwise permitted by the Resident. Sufficient material shall be applied to thoroughly saturate the surface making sure to brush out excess material that does not penetrate.

When the sealer is applied to horizontal surfaces, it shall be applied in a single saturating application with sufficient material and applied so the surface remains wet for one to two minutes before penetration into the concrete. Surface residues, pools and puddles shall be broomed-out thoroughly until they completely penetrate into the surface.

When the sealer is applied to vertical and sloped surfaces, it shall be applied in a "wet-on-wet" application for best results on most porous materials. In the case of extremely dense concrete, it may be necessary to restrict the amount of material applied to one saturating application in order to prevent surface darkening. Apply from the bottom up with sufficient material to thoroughly coat the surface and create a slight rundown below the spray pattern. Allow the first application to penetrate the concrete surface, and within a few minutes after the first coat appears dry, reapply in the same saturating manner.

When the sealer is applied to vertical and sloped surfaces, it shall be applied in two applications, 10 minutes apart, with a low pressure (20 psi) airless sprayer.

515.05 Method of Measurement

Clear Protective Coating for Concrete Surfaces will be measured for payment by the square yard, satisfactorily applied and accepted.

515.06 Basis of Payment

Clear Protective Coating for Concrete Surfaces will be paid at the Contract unit price per square yard which price shall be full compensation for all labor, materials, equipment and incidentals required for furnishing and applying the clear concrete protective coating as shown on the Plans, in accordance with these Specifications or as approved by the Resident.

Surface preparation, vegetation removal, and protection of surfaces not designated for treatment will not be measured separately for payment, but shall be incidental to the Clear Concrete Protective Coating item.

Payment will be made under:

Pay Item		Pay Unit
515.202	Clear Protective Coating for Concrete Surfaces	Square Yard

SPECIAL PROVISION

SECTION 515

PROTECTIVE COATING FOR CONCRETE SURFACES

(Epoxy Overlay)

515.01 Description

The first paragraph is amended to read:

This special provision describes furnishing and applying two layers of a two-component polymer overlay system in accordance with what is shown on the Plans or as approved by the Resident. The total thickness of the overlay system shall be 1/4 inch.

515.02 Materials

Furnish materials specifically designed for use over concrete. Pre-qualified polymer liquid binders are as follows:

Product Trade Name	Manufacturer or Supplier	Telephone
Mark-163 Flexogrid	PolyCarb, Inc.	(866) 765-9227
Sikadur 22 Lo-mod	Sika Corporation	(248) 569-5665
E-Bond 526 Lo-Mod	E-Bond Epoxies, Inc.	(954) 566-6555
Propoxy DOT Type III	Unitex	(816) 231-7700
Sure Level Epoxy (J-57)	Dayton Superior	(888) 977-9600
ICO Flexi-Coat	International Coatings, Inc.	(800) 624-8919
Flexolith	Euclid Chemical Co.	(800) 321-7628

Polymer Resin

The polymer resin base and hardener shall be composed of two-component, 100 percent solids, 100 percent reactive, thermosetting compound with the following properties:

Property	Requirements	Test Method
Gel Time [A]	15 - 45 minutes @ 75° F	ASTM C881
Viscosity [A]	7 - 70 poises	ASTM D2393, Brookfield RVT, Spindle No. 3, 20 rpm
Shore D Hardness [B]	60-75	ASTM D2240
Absorption [B]	1% maximum at 24 hour	ASTM D570
Tensile Elongation [B]	30% - 70% @ 7 days	ASTM D638
Tensile Strength [B]	>2000 psi @ 7 days	ASTM D638
Flexural Strength [B]	>4500 psi @ 7 days	ASTM D790
Chloride Permeability [B]	<100 coulombs @ 28 days	AASHTO T277

[A] Uncured, mixed epoxy binder [B] Cured, mixed epoxy binder

Aggregates

Furnish natural or synthetic aggregates that have a proven record of performance in applications of this type. Furnish aggregates that are non-polishing, clean, free of surface moisture, fractured or angular in shape; free from silt, clay, asphalt, or other organic materials; and meet the following properties and gradation requirements:

Aggregate Properties:

Property	Requirement	Test Method
Moisture Content	≤0.2%	ASTM C566
Hardness	≥6.5	Mohs Scale
Fractured Faces	100% with at least 1 fractured face & 80% with at least 2 fractured faces of material retained on No.16	ASTM 5821

Gradation:

Sieve Size	% Passing by Weight
No. 4	100
No. 8	30 – 75
No. 16	0 – 5
No. 30	0– 1

515.21 Required Properties of Overlay System

The required properties of the overlay system are listed in the table below:

Property	Requirement [A]	Test Method
Minimum Compressive Strength at 8 Hrs. (psi)	1,000 psi @ 8 hours 5,000 psi @ 24 hours	ASTM C 579 Method B, Modified [B]
Thermal Compatibility	No Delaminations	ASTM C 884
Minimum Pull-off Strength	250 psi @ 24 hours	ACI 503R, Appendix A

[A] Based on samples cured or aged and tested at 75°F

[B] Plastic inserts that will provide 2-inch by 2-inch cubes shall be placed in the oversized brass molds.

515.22 Approval of Polymer Overlay System

Submit product data sheets and specifications from the manufacturer, and a certified test report to the Resident for approval.

For materials not pre-qualified, in addition to the above submittals, submit product history/reference projects and a certified test report from an independent testing laboratory showing compliance with the requirements of the specification.

Product data sheets and specifications from the manufacture consists of literature from the manufacturer showing general instructions, application recommendations/methods, product properties, general instructions, or any other applicable information.

515.23 Construction

Conduct a pre-installation conference with the manufacturer's representative prior to construction to establish procedures for maintaining optimum working conditions and coordination of work. Furnish the Resident a copy of the recommended procedures and apply the overlay system according to the manufacturer's instructions. The manufacturer's representative familiar with the overlay system installation procedures shall be present at all times during surface preparation and overlay placement to provide quality assurance that the work is being performed properly.

Store resin materials in their original containers in a dry area. Store and handle materials according to the manufacturer's recommendations. Store all aggregates in a dry environment and protect aggregates from contaminants on the jobsite.

Surface Preparation

Determine an acceptable shotblasting machine operation (size of shot, flow of shot, forward speed, and/or number of passes) that provides a surface a profile meeting CSP 5 according to the International Concrete Repair Institute Technical Guideline No. 03732. If the Resident requires additional verification of the surface preparation, test the tensile bond strength according to ACI 503R, Appendix A of the ACI *Manual of Concrete Practice*. The surface preparation will be considered acceptable if the tensile bond strength is greater than or equal to 250 psi or the failure area at a depth of 1/4 inches or more is greater than 50 percent of the test area. Continue adjustment of the shotblasting machine and necessary testing until the surface is acceptable to the Resident or a passing test result is obtained.

Prepare the entire surface using the final accepted adjustments to the shotblasting machine as determined above. Thoroughly blast cleans with hand-held equipment any areas inaccessible by the shotblasting equipment. Do not perform surface preparation more than 24-hours prior to the application of the overlay system.

Just prior to overlay placement, clean all dust, debris, and concrete fines from the concrete surface including vertical faces of curbs and barrier walls up to a height of one inch above the overlay with compressed air. When using compressed air, the air stream must be free of oil. Any grease, oil, or other foreign matter that rests on or has absorbed into the concrete shall be removed completely.

The Resident may consider alternate surface preparation methods per the overlay system manufacture's recommendations. The Resident will approve the final surface profile and cleanliness prior to the Contractor placing the epoxy overlay.

Application of the Overlay

Perform the handling and mixing of the epoxy resin and hardening agent in a safe manner to achieve the desired results according to the manufacturer's instructions. Do not apply the overlay system if any of the following exists:

a. Ambient air temperature is below 50°F;
b. Concrete surface temperature is below 50°F;
c. Moisture content in the concrete exceeds 4.5 percent when measured by an electronic moisture meter or shows visible moisture after two-hours when measured in accordance with ASTM D4263;
d. Rain is forecasted during the minimum curing periods listed under C.5 ;
e. Materials component temperatures below 50°F;
f. Concrete age is less than 28 days unless approved by the Resident.

After the concrete surface has been shotblasted or during the overlay curing period, only necessary surface preparation and overlay application equipment will be allowed on the concrete surface. Begin overlay placement as soon as possible after surface preparation operations.

The polymer overlay shall consist of a two-course application of epoxy and aggregate. Each of the two courses shall consist of a layer of epoxy covered with a layer of aggregate in sufficient quantity to completely cover the epoxy. Apply the epoxy and aggregate according to the manufacturer's requirements. Apply the overlay using equipment designed for this purpose. The application machine shall feature positive displacement volumetric metering and be capable of storing and mixing the polymer resins at the proper mix ratio. Disperse the aggregate using a standard chip spreader or equivalent machine that can provide a uniform, consistent coverage of aggregate. First course applications that do not receive enough aggregate before the epoxy gels shall be removed and replaced. A second course applied with insufficient aggregate may be left in place, but will require additional applications before opening to traffic.

After completion of each course, cure the overlay according to the manufacturer's instructions. Follow the minimum cure times as prescribed by the manufacturer. Remove the excess aggregate from the surface treatment by sweeping, blowing, or vacuuming without tearing or damaging the surface; the material may be re-used if approved by the Resident and manufacturer. Apply all courses of the overlay system before opening the area to traffic. Do not allow traffic on the treated area until directed by the Resident.

After the first layer of coating has cured to the point where the aggregate cannot be pulled out, apply the second layer. Prior to applying the second layer, broom and blow off the first layer with compressed air to remove all loose excess aggregate.

Prior to opening to traffic, clean all debris and polymer from the roadway. If required by the Resident, a minimum of three days following opening to traffic, remove loosened aggregates from the concrete and approach pavement.

Application Rates

Apply the epoxy overlay in two separate courses in accordance with the manufacturer's instructions, but not less than the following rate of application.

Course	Minimum Epoxy Rate [A] (GAL/100 SF)	Aggregate [B] (LBS/SY)
1	2.5	10+
2	5.0	14+

[A] The minimum total applications rate is 7.5 GAL/100 SF.
[B] Application of aggregate shall be of sufficient quantity to completely cover the epoxy.

Minimum Curing Periods

As a minimum, cure the coating as follows:

	Average temperature of concrete surface, epoxy and aggregate components in °F					
Course	60-64	65-69	70-74	75-79	80-84	85+
1	4 hrs.	3 hrs.	2.5 hrs	2 hrs	1.5 hrs.	1 hr.
2 *	6.5 hrs.	5 hrs.	4 hrs.	3 hrs.	3 hrs.	3hrs.

*Cure course 2 for eight hours if the air temperature drops below 60° F during the curing period.

515.05 Method of Measurement

The Authority will measure Epoxy Overlay in area by square yards completed and accepted, in accordance with the Plans.

515.06 Basis of Payment

Payment is full compensation for preparing the surface; for tensile bond testing; for providing the overlay; for cleanup; for sweeping/vacuuming and disposing of excess materials; and for labor, equipment, tools, and incidentals necessary to complete the work.

Payment will be made under:

Pay Item		Pay Unit
515.23	Epoxy Overlay	Square Yard

SPECIAL PROVISION

SECTION 526

CONCRETE BARRIER

(Temporary Concrete Barrier Type I - Supplied by Authority)

526.01 Description

The following paragraphs are added:

This work shall consist of loading, transporting, setting, resetting, removing, transporting and stacking temporary concrete barrier Type I – supplied by Authority of a shape designated on the Plans. The barrier shall have attachments allowing individual sections to be connected into a continuous barrier.

The work also includes supplying connecting pins and furnishing and mounting retro-reflective delineators, per Subsection 526.03, on both Contractor-supplied and Authority-supplied temporary concrete barriers.

Concrete barriers supplied by Authority shall be available at the following location(s):

Maintenance Area	Linear Feet of Barrier
Crosby Maintenance Area Mile 45.8	3,550 LF

Upon substantial completion of work, the Contractor shall remove and transport the concrete barrier - supplied by Authority back to Crosby Maintenance Area.

526.02 Materials

The following paragraphs are added:

e. Delineators shall be bi-directional with a minimum effective reflective area of eight square inches as approved by the Resident. The reflectors shall be methyl methacrylate and the housing of acrylonitrile butadiene styrene. Color shall be in accordance with the MUTCD.

f. Connecting pins shall be a one inch diameter A36 steel hot rolled round rod that has a four inch long 180 degree bend at the top ("J" shaped). The rod shall be 2'-11" long pre-bend and 2'-7" long post bend.

526.021 Acceptance

The Resident shall have the authority to accept or reject all temporary concrete barrier Type I and temporary concrete barrier Type I – supplied by Authority used on the Project.

526.03 Construction Requirements

The following paragraphs are added:

The Contractor shall notify the Resident prior to the scheduled pick-up and delivery of concrete barrier. No barrier shall be removed from or stacked at the Turnpike's Maintenance Area without approval of the Resident.

The Contractor shall move and place barrier utilizing methods that will not damage the barrier. Barrier that is damaged by the Contractor by failing to use proper methods shall be replaced by the Contractor at no additional cost to the Authority.

Concrete barrier supplied by the Authority consists of several different styles. Not all barriers may be compatible. The Contractor shall utilize caution when setting barrier to use identical barrier types as adjacent barrier. Non-compatible barrier that cannot be attached together shall be overlapped by a minimum of 10 feet with the blunt end on the non-traffic side of the barrier. This work will not be measured separately for payment, but shall be incidental to the concrete barrier.

Concrete barrier placed at roadway low points shall be shimmed on 1 inch by 2 inch by 2 foot long wood planks to allow drainage to pass under the barrier. In addition, the Resident may direct the Contractor to shim the concrete barrier at other locations to provide for proper roadway drainage. All labor, material, and equipment necessary to shim the barrier will not be measured separately for payment, but shall be incidental to the Concrete Barrier.

Pins connecting the barrier shall be set flush with the top of the barrier.

The removal of concrete barrier from adjacent to the travel lane may be conducted without a lane closure if it is accomplished in accordance with the following requirements:

- Barrier is removed from the trailing end and the workmen and equipment involved in the operation are always behind the barrier. No workmen or equipment shall enter the travel lane.
- Barrier shall be dragged away from the travel lane to at least a 30-degree angle by the use of a cable.
- Barrier shall be lifted no more than six inches while within 10 feet of the travel lane.

Retro-Reflective Delineators shall be mounted as follows:

- One on top of each barrier.
- One on the traffic side of every barrier used in a taper.
- One on the traffic side of every other barrier at regularly spaced intervals and locations.
- Delineators shall be installed on both sides of the barrier if barrier is used to separate opposing traffic.
- Delineators shall be physically adhered so as to withstand the force of throw from a snow plow.

- If more than 25% of delineators in any 50 foot section of barrier fall off for any reason, the Contractor will be responsible for reinstalling all the delineators in that run at that their own cost.
- The Contractor is required to submit the installation method for review and approval to the Resident.

526.04 Method of Measurement

The following paragraphs are added:

Temporary Concrete Barrier Type I – Supplied by Authority shall be measured for payment by the lump sum.

The loading, transporting, setting, resetting, removing, transporting and stacking of the barrier, the furnishing, installation and maintenance of the barrier delineators, and furnishing and installing connector pins will not be measured separately for payment, but shall be incidental to the cost of the Barrier. Temporary storage of Concrete Barrier between construction phases, if required, will not be measured separately for payment, but shall be incidental to the cost of the Barrier. All equipment required to load, unload, transport and stack Concrete Barrier shall be supplied by the Contractor.

Any Barrier lost or damaged by the Contractor shall be replaced by the Contractor at no additional cost to the Authority.

526.05 Basis of Payment

The fifth paragraph is deleted and not replaced.

The following paragraphs are added:

Temporary Concrete Barrier Type I – Supplied by Authority will be paid for at the Contract lump sum price, complete in place. Such payment shall be full compensation for loading, transporting, setting, resetting, temporary storage, removing, transporting and stacking at the area designated, furnishing all materials, and all other incidentals necessary to complete the work. Temporary Concrete Barrier Type I – Supplied by Authority and all connecting pins shall remain the property of the Authority, and shall be returned to the Turnpike Maintenance Area as designated in Subsection 526.01.

Payment of Concrete Barrier shall be based on a percentage of the work accomplished during that pay period.

Payment will be made under:

Pay Item		Pay Unit
526.306	Temporary Concrete Barrier Type I – Supplied by the Authority	Lump Sum

SPECIAL PROVISION

SECTION 526

CONCRETE BARRIER

(Median Barrier Type I, IA, II, III)
(Median Barrier Transition Type I, II)

526.01 Description

This Section is deleted and replaced with the following:

This work shall consist of the furnishing, constructing, erecting, and setting permanent concrete barrier and associated elements in accordance with these Specifications and the lines and grades shown on the Plans or established by the Resident. The length of each precast barrier segment shall be in accordance with the parameters shown on the Plans. The Contractor shall minimize the number of joints in the final barrier assembly to the extent possible.

Median Barrier Type I - Precast Double faced single slope barrier 2'- 0" wide at the base, 48" high and 45" reveal as shown on the Plans.

Median Barrier Type IA - Precast Double faced single slope barrier 2'- 5 ½" wide at the base, 66" high and 45" min. reveal as shown on the Plans.

Median Barrier Type II – Cast in Place Double faced single slope barrier 4'- 0" wide at the base, 48" high and 45" reveal as shown on the Plans.

Median Barrier Type II – Precast Double faced single slope barrier 4'- 0" wide at the base, 48" high and 45" reveal as shown on the Plans.

Median Barrier Type III - Precast Single faced single slope barrier 1'- 5 ¼" wide at the base, 51.5" high and 45" reveal as shown on the Plans.

Median Barrier Transition Type I - Precast Section of barrier to transition from double faced single slope barrier to vertical section for guardrail attachment as shown on the Plans.

Median Barrier Transition Type II - Precast Section of barrier to transition from Median Barrier Type I to Median Barrier Type II as shown on the Plans.

526.02 Materials

The second paragraph is deleted in its entirety and replaced with the following:

All concrete Median Barrier and Median Barrier Transitions, except Median Barrier Type II, shall be supplied as precast units produced by an approved commercial precasting plant. Precast concrete shall be Class P, in accordance with Special Provisions, Section 502.05 - Composition and Proportioning, with a minimum compressive strength of 4,500 psi. Cast-in-Place concrete shall be Class AAA-Deck (without synthetic reinforcement) in accordance with Special

Provisions, Section 502.05 - Composition and Proportioning, with a minimum compressive strength of 4,500 psi.

Materials for barrier connection assemblies shall be fabricated in accordance with MaineDOT Standard Specification 504. All barrier connection assemblies shall be hot dip galvanized after fabrication in accordance with ASTM A123 and A153.

The second paragraph is amended by the addition of the following:

All reinforcing steel for concrete barrier shall be epoxy coated. Reinforcing steel shall be fabricated and placed in accordance with the Standard Specifications, Section 503.

526.03 Construction Requirements

The first and second paragraphs are deleted and replaced with the following:

All permanent concrete barrier and transition barrier shall be constructed in accordance with the provisions of Special Provision 502 – Composition and Proportioning, through Section 502.15 – Curing Concrete, inclusive, with the following additions:

a. The following is added to Section 502.10 A. – Construction of Forms, after Construction of Forms: "Permanent concrete barrier shall not be formed using slip forming methods. Temporary concrete barrier may be formed by precasting and/or prestressing methods."

The following paragraphs are added after the fourth paragraph:

d. Sections of barrier shall be uniform in color and in good condition, free from cracked or spalled surfaces.

e. Defects shall be divided into two categories, minor defects and major defects. Minor defects in the barrier may be repaired in the field. Major defects shall be cause for rejection of the section or, at the Authority's sole discretion, the section shall be repaired in a manner directed by the Resident.

   Minor defects are defined as holes, honeycombing or spalls which are 6 inch or less, in diameter, and which do not expose the outermost surface of the steel reinforcement. Surface voids 3/8 inch, or less, in diameter and 3/8 inch, or less, in depth are not considered defects and do not require repair.

   Major defects are defined as any defect which does not meet the definition of a minor defect or minor defects which, in aggregate, comprise more than 2% of the surface area of the barrier section.

The repair of hardened concrete shall be as follows:

- Minor Defect Repair: Repair shall be made with a fast set non-shrink patching material included on MaineDOT's list of prequalified materials. Methods of repair shall be acceptable to the Resident. The color of the repaired portion shall match as nearly as practicable, the color of the surrounding concrete. Repaired portions shall match shape and tolerance requirements.

- Major Defect Repair: Major defect repair shall be pre-approved by the Engineer.

The following paragraphs are added at the end of this section:

The layout and placement of the concrete barriers shall be to the alignment and elevations shown on the Plans or as directed. Before any barrier or transitions may be placed, the subbase shall be compacted to 95 percent density and fine graded to a tolerance of +/- 1/2 inch of the true grade at any location under the barrier.

All Cast-in-Place barrier adjacent to precast barriers shall include hardware for the barrier connection as detailed in the Plans.

526.04 Method of Measurement

The following paragraphs are added:

Median Barrier Type I, IA, II, and III will be measured for payment by the linear foot from end to end of each run of barrier measured along the centerline of the barrier complete in place. No deduction in pay length will be made for joints between abutting barrier sections.

Median Barrier Transition Type I and II will be measured by each barrier as shown on the Plans.

526.05 Basis of Payment

The following paragraphs are added:

The accepted quantities of Median Barrier Type I, IA, II, and III will be paid for at the Contract unit price per linear foot, as specified, complete in place. Such payment shall be full compensation for furnishing all material, assembling and all incidentals necessary to complete the work.

The accepted quantities of Median Barrier Transition Type I and II shall be paid for at the Contract unit price per each, as specified, complete in place.

Payment will be made under:

Pay Item		Pay Unit
526.351	Median Barrier Type I - Precast	Linear Foot
526.3511	Median Barrier Type IA - Precast	Linear Foot
526.352	Median Barrier Type II - Cast-in-Place	Linear Foot
526.3522	Median Barrier Type II - Precast	Linear Foot
526.353	Median Barrier Type III - Precast	Linear Foot
526.361	Median Barrier Transition Type I - Precast	Each
526.362	Median Barrier Transition Type II - Precast	Each

SPECIAL PROVISION

SECTION 527

ENERGY ABSORBING UNIT

(Center Barrier Crash Attenuator (FasTRACC))

527.01 Description

This task shall include furnishing, installing and securing the energy absorbing units as described in the Plan drawings and detailed by the vendor. Drawings and general provisions of this Contract, including General Provisions and Special Conditions, apply to work of this Section.

527.02 Materials

Energy absorbing units shall be FasTRACC™ manufactured by Trinity Highway Products, LLC or an approved equal. Units must be fully re-directive, non-gating and suitable for installation on a concrete or asphalt surface. Units shall have the ability to mount to a 2' wide concrete barrier. The energy absorbing units shall be approved at NCHRP Report 350 Test Level 3 with a 70 mph impact speed and must be approved by the Resident.

527.03 Execution

Installation and securing of the energy absorbing units shall be done according to the manufacturer's recommendations so that the unit meets NCHRP Report 350 Test Level 3 with a 70 mph impact speed. Installation must be approved by the Resident.

Basis of Payment

The energy absorbing units will be paid for at the Contract unit price per each which shall include all associated hardware and equipment required for a complete operational system which meets NCHRP Report 350 Test Level 3 with a 70 mph impact head.

Payment will be made under:

Pay Item		Pay Unit
527.306	Center Barrier Crash Attenuator (FasTRACC)	Each

SPECIAL PROVISION

SECTION 527

ENERGY ABSORBING UNIT

(Work Zone Crash Cushion)

527.01 Description

The first paragraph is deleted in its entirety and replaced with the following:

The Contractor shall furnish and install work zone crash cushions where shown on the Plans, as specified herein, in Special Provision 652, or as approved by the Resident. Work zone crash cushions are required at each exposed end of temporary concrete barrier or guardrail.

The exposed end of the concrete barrier within 30 feet of the mainline travel lane shall be protected at all times. Barrier shall not be reset until after the work zone crash cushion(s) has been set to protect the exposed end of the barrier.

527.02 Materials

The following paragraph is added:

Only work zone crash cushions meeting the NCHRP Report 350 TL-3 crash test requirements may be used on the turnpike and local roadways with posted speeds of 45 MPH or greater. Work zone crash cushions meeting the NCHRP Report 350 TL-2 crash test requirements may be used on local roadways with posted speeds of 40 MPH or less. The Contractor shall provide the Resident with documentation of the proposed work zone crash cushion's NCHRP Report 350 Crash Test Results prior to installation at the jobsite.

527.03 Construction Requirements

The following is added to the end of the first paragraph:

The design speeds for work zones with crash cushions shall be 35 mph for local roads and 70 mph for turnpike roadways unless otherwise noted on the Plans.

527.05 Basis of Payment

Payment will be made under:

Pay Item		Pay Unit
527.341	Work Zone Crash Cushions – TL-3	Unit

SPECIAL PROVISION

SECTION 535

PRECAST, PRESTRESSED CONCRETE SUPERSTRUCTURE

(Precast Concrete Tunnel)

535.01 Description

This work shall consist of furnishing and installing precast concrete tunnel sections into one continuous unit in accordance with these Specifications and in conformity with the lines, grades, and dimensions shown on the Plans. The tunnel shall consist of individual concrete sections connected together via connection rods located within the sides of the segments and extending across the lap joints of each segment. The precast concrete tunnel in its final configuration shall be watertight. Underground precast concrete stairwells will form the two terminal ends of the overall tunnel, and shall include the above ground section of the tunnel on the tunnel's north side. (Note that the above ground section at the southern end of the tunnel shall be cast in place concrete measured and paid under Special Provision 502).

535.02 Materials

The following information is added:

Joint Sealants:

Self-leveling joint sealant shall be Sikaflex 1C-SL or an approved equal. Material shall be a premium-grade, high-performance, self-leveling one-part polyurethane sealant. Material shall meet Federal Specification TT-S-00230C, Type I, Class A; ASTM C920, Type S, Grade P, Class 25; and shall exhibit the following minimum data properties at 21 days:

Shore A Hardness:	40 +/-5 (ASTM D2240)
Tensile Strength:	150psi (ASTM D412)
Elongation @ Break:	450% (ASTM D412)
Modulus of Elasticity:	110psi (ASTM D412, @ 100%)

Non-sag joint sealant shall be Sikaflex 1A or an approved equal. Material shall be a premium-grade, high-performance, moisture cured polyurethane-based elastomeric sealant. Material shall meet Federal Specification TT-S-00230C, Type II, Class A, and ASTM C920, Type S, Grade NS, Class 35.

Shore A Hardness:	40 +/-5 (ASTM D2240)
Tensile Strength:	175psi (ASTM D412
Elongation @ Break:	550% (ASTM D412)
Modulus of Elasticity:	85psi (ASTM D412, @ 100%)

Non-Shrink Grout Materials:

Non-shrink grout material shall be chosen from the MaineDOT qualified product list for grout materials. The design compressive strength shall be no less than 5,000 psi.

Gasket Materials:

Gasket material shall be a prelubricated RFS (Reduced Friction Seal) for sealing the tunnel joints as manufactured by Hamilton Kent, Tylox Superseal TSS Series, or an approved equal. The gasket shall be comprised of a synthetic rubber compound which meets the requirements of ASTM C1619 Class C and ASTM C443. Material shall shaped with *rounded-corners* and shall exhibit the following minimum data properties:

Shore A Hardness:	50 +/-10 (ASTM D2240)
Tensile Strength:	1200 psi (ASTM D412)
Elongation @ Break:	350% (ASTM D412)
Watertightness:	5 psi (ASTM C1677)
Installation:	Per manufacturer's instructions

Connection Rods:

Connection rods and corresponding nuts and bearing plates shall be made of a high strength steel material such as a DSI Dywidag system or an approved equal. Connections rods shall be in conformance with the following minimum data properties:

Bar Diameter:	1-3/8 inches (36 mm) (min.)
Ultimate Tensile Strength:	fu = 150 ksi (ASTM A722)
Ultimate Tensile Load:	Fu = 237 kips
Bearing Plates:	Fy = 36 ksi (ASTM A36)

535.024 Design Criteria

The following paragraph is added:

The precast concrete tunnel shall be a precast concrete steel-reinforced structure designed to satisfy the AASHTO HL-93 live load requirements when combined with the thickness of fill above the tunnel as shown on the Contract Plans.

The design cross-section shall contain haunches within the corners to increase the rigidity of the slabs and walls; however the limits of the haunches must be minimized as shown on the drawings to avoid conflicts with the electrical equipment.

535.025 References

The following paragraph is added:

This special provision incorporates by reference ASTM Specification C1433, "*Standard Specification for Manufacturer of Precast Reinforced Concrete Box Culvert Sections for Culverts, Storm Drains and Sewers*." ASTM C1433 shall provide the minimum design standards for the precast concrete tunnel segments, unless otherwise noted herein or on the Contract Plans.

535.03 Working Drawings

The following paragraphs are added:

The Contractor's precast manufacturer shall submit shop drawings of the precast concrete tunnel elements which shall illustrate individual element dimensions, reinforcing layout, and erection procedures as necessary for the Contractor to construction the tunnel in accordance with the phased construction denoted in the contract Plans. Concrete mix designs shall be included with the submittal. The shop drawings will be reviewed by the engineer of record and approval will be established in accordance with Section 105.7 of these Specifications.

Approval of the shop drawings shall be completed prior to fabricating any precast tunnel segments. Drawings shall illustrate tunnel dimensions, connection rod locations and pocket sizes, gaskets, and lap splice details. Concrete mix designs shall include aggregate specific gravity, absorption, percent fracture, fineness modulus, gradation, and reports of previous test results.

The Contractor's concrete precaster/manufacturer shall submit shop drawings of the tunnel segments including the gasket and connection rod materials. Shop drawings for these elements shall include gasket properties, gasket installation procedures, connection rod steel material properties, connection rod pocket dimensions (within the walls and ceiling of the tunnel sections), and bearing plate dimensions. The shop drawings will be reviewed by the engineer of record and approval will be established in accordance with Section 105.7 of these Specifications.

The Contractor's concrete precaster/manufacturer is responsible for the design of the lifting devices.

535.11 Reinforcing Steel

The following paragraph is added:

The mild steel reinforcing shall be Grade 60 ksi in accordance with ASTM A615 and shall be epoxy coated in accordance with ASTM A775.

535.115 Connection Rods

The following paragraph is added:

Connection rods shall be placed within the small voided pockets on the interior walls, corners, and ceiling of the tunnel segments as shown in the Contract Plans. Connection rods shall be hand-tightened with a wrench once the tunnel segment is installed into its final position.

535.12 Voids and Inserts

The following paragraph is added:

The Contractor shall take notice that there are voids/penetrations identified in several tunnel segments for the installation of utilities such as conduits and sump pump pipes. This information shall be shown on the shop drawings. Steel reinforcement layout shall be predetermined to avoid conflicts with penetrations. Penetrations shall be formed with sleeves prior to casting of the segments. Field drilling will not be permitted without written consent from the Engineer of Record.

535.13 Concrete

The following paragraph is added:

The concrete mix design shall meet the requirements shown in the table and result in a minimum 28-day compressive strength of 5,000 psi.

535.22 Tolerances

The following paragraphs are added:

Permissible variation to each tunnel segment is as follows:

- Internal Dimensions – The internal dimensions shall not vary from the design by more than 1% with a maximum variation of 1/4 inch. Do not allow the internal diagonal dimensions to vary by more than 1/2 inch. Do not allow the haunch dimensions to vary more than 1/4 inch from design dimensions.
- Slab and Wall Thickness – The slab and wall thickness shall not vary from the design dimensions by more than 3/16 inch.
- Length of Opposite Surface – The laying length of the two opposite surfaces of the tunnel section shall not vary by more than 1/8 inch/foot of the internal span, with a maximum of 1/2 inch.
- Position of Reinforcement – The position of reinforcement shall not vary from the approved shop drawings by more than 1/2 inch in any direction. Place reinforcement so the indicated cover clearance does not deviate more than +/- 1/4 inch). Provide 1-1/2 inch minimum cover at the mating surface, as measured to the end of the joint.

- Position of the ducts for post-tensioning bars shall not vary by more than 1/8-inch in any direction.
- Joint gap between segments shall be no more than 1/2 inch (to minimize joint sealant materials).

535.235 Installation of Precast Tunnel Segments

The following paragraphs are added:

Precast tunnel segments shall be erected as shown on the Plans. Subbase materials shall be installed to the grades and compactness shown on the plans prior to setting the tunnel segments. Manufacturer-installed gaskets shall be checked prior to setting each segment to ensure the gasket is securely affixed at the concrete joint. Defective gaskets shall be immediately replaced, and gaskets not securely fastened to the concrete shall be repaired with factory-supplied adhesive for field installation.

The precast tunnel segment shall be set to the elevation and location shown on the Plans. Once in position, the next tunnel segment shall be aligned and adjoined to the previous segment. When adjoining segments care shall be taken to prevent subbase materials from fouling the lap splice joint and the adhesive material along the bottom lap splice joint. Prevention of subbase migration into the joint may be accomplished using a thin sheet of pressure-treated plywood of dimensions 8 ft long by 10 ft wide (with the 10-ft wide dimension parallel to the 9 ft – 8 inch dimension of the tunnel segment). In lieu of plywood, a low-friction sheet material may be used. Sheet materials may be left in place if less than 1/4 inch thick.

Prior to releasing subsequent segments from the crane support, the segment shall be tightened to the adjoining segment by installing the connection rods at the interior pocket locations to create a watertight seal at the joint. Bearing plates and nuts shall be readily available on-hand to commence the tightening of the rods. To overcome the bottom friction between the tunnel segment and the subbase materials, the crane may be used to lift the tunnel segment and to slightly lift the previously installed tunnel segment to enable a tight fit at the joint. Once the joint is tight and the rods are hand-tightened, the position of the tunnel segments shall be checked for alignment and condition. Tolerances shall be checked and maintained, including the gap between the segments. Upon successful inspection by the resident, the crane may release the segments and tunnel construction may continue.

After setting all of the tunnel segments within the specific construction phase, and after tightening of the connection rods, the joint sealant material shall be applied to the exterior side of the segment gap per the joint sealant manufacturer's instructions. Backer rod material may be used around the perimeter of the joint (top face and two side faces only) so that the depth of the joint sealant material is no greater than 1 inch. Special care shall be taken to ensure full application along the gaps of the segment. The bottom gap will not receive any joint sealant material. Non-sag joint sealant material shall be used on the vertical surfaces, while self-leveling joint sealant material shall be used on the top exterior surface of the joint.

Exterior waterproofing membranes shall be applied to the exterior tunnel faces (including underground sections of the stairwells) once all tunnel sections are fully installed for the designated construction phase. Full installation shall include snug-tight fitting of the tunnel segments and hand-tightening of the connection rods. Exterior perimeter drainage and backfill

shall be installed upon completion of the waterproofing installation. Exterior waterproofing and backfilling shall be completed in accordance with their respective specifications.

Temporary earth support systems placed at the opening of the tunnel segments in support of phased construction shall be installed in accordance with Section 511 of these Specifications. Care shall be taken to prevent any damage, settlement, or shifting of the tunnel segments during installation of the temporary earth support system.

Once exterior waterproofing is performed for each particular construction phase, the interior waterproofing materials shall be installed. Backer rod material may be used around the interior perimeter of the joint (four sides) so that the depth of the joint sealant material is no greater than 1 inch. The self-leveling joint sealant shall be installed in the floor gap, while the non-sag joint sealant shall be installed in the gaps along the walls and ceiling. The bottom pockets (connection rod locations) shall be filled with non-shrink grout. The top pockets shall remain unfilled.

Once interior waterproofing per phase is completed and the bottom pockets are filled, the walls and ceiling of the tunnel shall be coated with a pigmented coating as described in Special Provision 515. Wall and ceiling coating shall be applied prior to installation of utilities.

The floor of the tunnel shall be coated with a non-skid coating material as described in Special Provision 515. The floor coating shall only be applied once all tunnel segments and architectural enclosures are installed and the tunnel is weather tight.

535.28 Method of Measurement

The following paragraph is added:

The Precast Concrete Tunnel will be measured for payment as one lump sum unit, complete, and accepted.

535.29 Basis of Payment

The following paragraphs are added:

The accepted quantity of Precast Concrete Tunnel will be paid for at the contract lump sum price, which shall include all labor and materials required for the fabrication, delivery, and installation of the precast concrete tunnel segments; delivery and installation of connection rods; non-shrink grout; and installation of joint sealant materials around the interior and exterior perimeter of each tunnel joint. Low-friction sheets used to install the tunnel segments and shop drawing submittals shall be incidental to the Precast Concrete Tunnel pay item.

The above ground section at the northern end of the precast concrete tunnel is included in the basis of payment. There is only one above-ground precast concrete tunnel sections as shown on the plans.

Excavations, subbase preparation, drainage, exterior waterproofing membranes, metal staircases, interior coatings, architectural components, and temporary earth support systems are not included herein, but rather will be paid for separately under their respective pay items.

Payment will be made under:

Pay Item		Pay Unit
535.70	Precast Concrete Tunnel	Lump Sum

SPECIAL PROVISION

SECTION 535

PRECAST, PRESTRESSED CONCRETE SUPERSTRUCTURE

(Precast Concrete Utility Pit)

535.01 Description

This work shall consist of furnishing and installing precast utility pits in accordance with these Specifications and in conformity with the lines, grades, and dimensions shown on the Plans. The utility pits shall consist of monolithic concrete units placed beneath the toll booth islands as shown in the Plans. The utility pits in final configuration shall be watertight.

535.03 Working Drawings

The following paragraphs are added:

The Contractor's precast manufacturer shall submit shop drawings of the precast concrete utility pits which shall illustrate element dimensions, reinforcing layout, and erection procedures as necessary for the Contractor to construction the utility pits in accordance with the Contract Plans. Concrete mix designs shall be included with the submittal. The shop drawings will be reviewed by the engineer of record and approval will be established in accordance with Section 105.7 of these Specifications.

Approval of the shop drawings shall be completed prior to fabricating any precast segments. Drawings shall illustrate dimensions, and watertight details. Concrete mix designs shall include aggregate specific gravity, absorption, percent fracture, fineness modulus, gradation, and reports of previous test results.

At the Contractors option, the utility pits may be constructed of cast-in-place steel reinforced concrete.

The Contractor's concrete precaster/manufacturer is responsible for the design of the lifting devices.

535.11 Reinforcing Steel

The following paragraph is added:

The mild steel reinforcing shall be Grade 60 ksi in accordance with ASTM A615 and shall be epoxy coated in accordance with ASTM A775.

535.13 Concrete

The following paragraph is added:

The concrete mix design shall meet the requirements shown in the table and result in a minimum 28-day compressive strength of 5,000 psi.

535.28 Method of Measurement

The following paragraph is added:

The Precast Concrete Utility Pit will be measured for payment per individual unit, complete, and accepted.

535.29 Basis of Payment

The following paragraphs are added:

The accepted quantity of Precast Concrete Utility Pit will be paid for at the contract unit price, which shall include all labor and materials required for the fabrication, delivery, and installation of the precast concrete utility pits; delivery and installation of dowel bars; and installation of joint sealant materials around the perimeter of each utility pit.

Excavations, subbase preparation, drainage, and temporary earth support systems are not included herein, but rather will be paid for separately under their respective pay items.

Payment will be made under:

Pay Item		Pay Unit
535.71	Precast Concrete Utility Pit	Each

SPECIAL PROVISION

SECTION 603

PIPE CULVERTS AND STORM DRAINS

(Reinforced Concrete Pipe)
(Concrete Collar)

603.01 Description

The following paragraphs are added:

This work shall also consist of furnishing and installing Class III reinforced concrete pipe at the locations as shown on the Plans or as approved by the Resident. These pipes shall meet the requirements of Subsection 706.02.

This work also consists of furnishing and installing a concrete collar to join the existing concrete pipe to the proposed concrete pipe in accordance with the details as shown on the Plans. The Contractor shall note that the concrete pipe ends may be of different sizes and may not fit snugly together.

603.11 Method of Measurement

The following paragraph is added:

The Concrete Collar shall be measured by each unit installed, complete in place and accepted. This shall be full compensation for furnishing labor and materials to construct a Concrete Collar to connect the existing and proposed pipe ends in a working like manner.

603.12 Basis of Payment

Concrete Collars will be paid for at the Contract unit price each regardless of the size of the existing and proposed pipes.

Payment will be made under:

Pay Item		Pay Unit
603.155	12 inch Reinforced Concrete Pipe - Class III	Linear Foot
603.165	15 inch Reinforced Concrete Pipe - Class III	Linear Foot
603.28	Concrete Collar for Reinforced Concrete Pipe	Each

SPECIAL PROVISION

SECTION 604

MANHOLES, INLETS AND CATCH BASINS

(Catch Basin)

604.01 Description

This work shall consist of furnishing and installing new catch basins.

604.02 Materials

The following sentences are added:

Catch Basin Frames and Grates shall be as outlined below and be manufactured by EJ Company of Brockton, Massachusetts or an approved equal and shall meet or exceed the AASHTO M306 Loading Requirements.

Catch Basin Frames shall be eight inch frames unless otherwise specified by the Plans or approved by the Resident with the following product numbers:

5521Z - 8 Inch Frame Product Number 00552111
5546Z - 6 Inch Frame Product Number 00554611
5544Z - 4 Inch Frame Product Number 00554411

Catch Basin Grates shall be a square holed grate as manufactured by EJ Company of Brockton, Massachusetts (or an approved equal) with the following product number:

5520M5 Grate Product Number 00552060

SPECIAL PROVISION

SECTION 606

GUARDRAIL

(Bridge Transition – Type III)
(Bridge Transition – Type III, Modified)

606.01 Description

The following sentence is added:

This work shall consist of furnishing and installing Type III guardrail bridge attachments as shown on the Plans. Bridge Transition – Type III shall be for transitioning between median barrier and w-beam guardrail and Bridge Transition – Type III, modified shall be for transitioning between median barrier and thrie-beam guardrail as shown on the Plans.

606.08 Method of Measurement

The following sentences are added:

Bridge Transition – Type III and Bridge Transition – Type III, Modified will be measured by each unit of the type specified, installed and accepted.

Curbing is not included in the Bridge Transition pay item but will be measured separately for payment under Special Provision Section 609.

606.09 Basis of Payment

The following paragraphs are added:

Bridge Transition – Type III and Bridge Transition – Type III, Modified will be paid for at the Contract unit price each complete in place and shall be full compensation for furnishing all labor, equipment and materials necessary to complete the work consisting of, but not necessarily limited to, the following: furnishing and installing guardrail, one terminal connector, including terminal connector anchorage and all other detailed accessories; furnishing and installing all required posts, rails, offset brackets, back-up plates, nuts, bolts, washers, and all other items necessary to make for a complete installation as shown on the Plans or as approved by the Resident.

Payment will be made under:

Pay Item		Pay Unit
606.1723	Bridge Transition - Type III	Each
606.1724	Bridge Transition - Type III, Modified	Each

SPECIAL PROVISION

SECTION 606

GUARDRAIL

(Guardrail Beam)

606.01 Description

The following paragraph is added:

This work shall consist of furnishing and installing proposed guardrail W-beam panels (RE-3) to replace existing damaged and rusty panels as approved by the Resident. The Contractor shall mark rail to be replaced for Resident's approval prior to the replacement of the rail.

606.02 Materials

The following sentence is added:

The materials for the W-beam panels shall conform to Subsection 710.04.

606.08 Method of Measurement

The following sentence is added:

Guardrail Beams shall be measured per linear foot installed and accepted.

606.09 Basis of Payment

The following paragraph is added:

The Guardrail Beams will be paid for at the Contract unit price per linear foot complete in place and shall be full compensation for furnishing all labor, equipment and materials necessary to complete the work. This work shall consist of furnishing and installing the new W-beam panels, all hardware, nuts, bolts, washers, and all other items necessary to complete the installation and connection to the posts.

SPECIAL PROVISION

SECTION 606

GUARDRAIL

(Terminal End – Anchored End)

606.01 Description

The following sentence is added:

This work shall also consist of furnishing and installing terminal end – anchored end, end treatments in accordance with these Specifications, the AASHTO-AGC-ARBTA Joint Committee Task Force 13 Report: A Guide to Standardized Highway Barrier Hardware, dated May 1995; and in reasonably close conformity with the lines and grades as shown on the Plans or as approved by the Resident.

606.02 Materials

The following sentence is added:

The guardrail elements shall be per the Components' List found on Sheet No. 2 of 2 of Drawing SEW02a – Trailing End Terminal – Foundation Tube Option in the Task Force 13 Report noted above.

The following Subsection is added:

606.042 Terminal End – Anchored End

Installation of the terminal end – anchored end shall be in strict accordance with the AASHTO-AGC-ARBTA Joint Committee Task Force 13 Report and the Details on Sheet No. 1 of 2 of Drawing SEW02a – Trailing End Terminal – Foundation Tube Option.

606.08 Method of Measurement

The second paragraph is amended by the addition of: ", Terminal End – Anchored End," after the words "breakaway cable terminal".

606.09 Basis of Payment

The second paragraph is amended by the addition of: ", Terminal End – Anchored End," after the words "breakaway cable terminal".

Payment will be made under:

Pay Item		Pay Unit
606.278	Terminal End – Anchored End	Each
606.279	Terminal End – Anchored End, Thrie Beam	Each

SPECIAL PROVISION

SECTION 606

GUARDRAIL

(Reflectorized Beam Guardrail Delineator)

606.01 Description

The following paragraphs are added:

Reflectorized beam guardrail delineators shall be installed on existing guardrail to remain in place, guardrail noted to be removed, modified and reset (single and/or double rail) or new guardrail, at the locations noted on Maintenance of Traffic plans or as approved by the Resident. The delineators shall be installed prior to traffic being shifted closer to the identified guardrail run. The color for the reflective sheeting shall be silver (white) when installed on the outside shoulder and yellow when installed on the inside shoulder.

Reflectorized beam guardrail delineators shall be mounted as follows:

1. Delineators on guardrail adjacent to a shifted detour should be spaced every other guardrail post and located at the bolt in the valley of the guardrail beam.

2. On existing steel bridge rail, the delineators shall be mechanically attached towards the top, every 10 feet, and bottom, every 20 feet. Delineators shall also be mechanically attached in a similar pattern to concrete endposts that are 10 feet or longer.

3. If more than 25% of delineators in any 50 feet of guardrail, bridge rail, or endposts fall off for any reason, the Contractor will be responsible for reinstalling all delineators in that run at that their own cost.

4. In no instance shall delineators be installed on guardrail which deviates substantially from the alignment (horizontal or vertical) of the roadway or which is located more than eight feet from the edge of pavement.

Exceptions and/or modifications will only be made with the approval of the Resident.

Contractor is required to submit installation method for review and approval to the Resident.

606.02 Materials

The reflectorized beam guardrail delineators shall be steel and meet the requirements of paragraph 4 of MaineDOT Standard Specification 606.02 - Materials.

606.08 Method of Measurement

The following paragraph is added:

Reflectorized Beam Guardrail Delineators will be measured by each unit of the kind specified and installed. Maintenance and replacement of delineators will not be measured separately for payment unless otherwise approved by the Resident.

606.09 Basis of Payment

The second and third sentences in the first paragraph are deleted and replaced with the following:

Reflectorized Beam Guardrail Delineators will be paid for at the Contract unit price each, complete in place, which price shall be full payment for furnishing and installing all components and for all incidentals necessary to complete the installation.

Payment will be made under:

Pay Item		Pay Unit
606.352	Reflectorized Beam Guardrail Delineator	Each

SPECIAL PROVISION

SECTION 606

GUARDRAIL

(Delineator Post)
(Remove and Reset Delineator Post)

606.01 Description

The following paragraphs are added:

This work shall also consist of furnishing and installing new delineator posts and/or removing and resetting existing delineator posts within the Contract limits. The existing reflectorized delineator panels on reset posts shall be removed and replaced with new reflectorized delineator panels as required by the Resident.

Existing and reset delineator posts shall be located as follows:

Outside Shoulder:

- One at guardrail trailing ends (green delineator).
- Two at guardrail approach ends (red delineators at face end and first angle point, FLEAT red on traffic side).
- One at guardrail attachments to endposts (white delineator).

Median:

- One at guardrail trailing ends (green delineator).
- Two at guardrail approach ends (red delineators at face end and first angle point, CAT or FLEAT MT red on both sides).
- One at guardrail attachments to endposts (yellow delineator).

Other Locations:

- One at culvert outlets (red delineator).
- Twenty per mile evenly spaced at the edge of outside shoulder (white delineator).
- One at electrical junction boxes not associated with another item (blue delineator).

Delineator posts that do not exist in the locations described above, shall be supplied and installed by the Contractor. The installation of the delineator post shall include the demountable reflectorized delineator.

Delineator posts shall be bolted to the back of the first wood post in the FLEAT 350's, CAT systems and FLEAT MT systems.

606.02 Materials

The following paragraphs are added:

Non-guardrail guardrail delineator posts shall conform to Subsection 606.02.

Guardrail delineator posts for the approach ends of 350 compliant end treatments shall be fabricated of a flexible, durable, non-discoloring polyethylene plastic capable of recovering from repeated impacts and resistant to solar degradation. The posts shall be a minimum of two inches in diameter, shall be ovalized at the top of the post to allow application of reflective sheeting, and shall be a maximum length of 36 inches. Color of the guardrail delineator posts shall be grey. Posts shall be capped at the top with a flexible rubber cap; Safe-Hit Flexible Guardrail Delineator Post or an approved equal.

Reflective sheeting shall be applied to the top of the post and the color of the sheeting shall be as described in section 606.01. Dimensions of sheeting shall be three inches by eight inches and shall conform to ASTM Type XI; 3MTM Diamond GradeTM DG3 Reflective Sheeting Series 4000 or an approved equal.

Guardrail delineator posts shall be fastened to guardrail posts with two fasteners. For wooden posts, two 3 inch by 3/8 inch lag screws with 5/8 inch flat washers shall be used. For steel guardrail posts, two self-drilling 1/4 inch by two inch screws with 5/8 inch flat washers shall be used.

The demountable reflectorized delineator panel shall meet the requirements of Subsection 719.06. Delineator panel shall be rectangles measuring eight inch x three inch.

606.03 Posts

The following paragraphs are added:

The installation of delineator posts shall conform to Subsection 606.03 for guardrail delineator posts.

The top of delineator posts associated with guardrail shall be installed 5’-0” (60 inches) above edge of pavement elevation. White delineator posts for mile delineation shall be 4’-6” (54 inches) above edge of pavement elevation. Delineators shall be installed four feet from edge of pavement except those delineating end treatments, culverts and electrical items.

Mile marker post shall be mounted on breakaway supports. The bottom of the sign shall be five feet from the solid white line and shall be offset five feet from the edge of pavement.

A mock-up of the guardrail delineator posts shall be submitted to the Resident for approval prior to installation.

Any materials damaged by the Contractor’s operations shall be replaced at no additional cost to the Authority.

Top of the delineator panel shall be flush with the top of post.

606.08 Method of Measurement

The following paragraphs are added:

Delineator Posts shall be measured by each unit installed and accepted. Delineator Posts Removed and Reset will be measured by each unit satisfactorily reset.

Mile Marker post shall be measured for payment as Delineator Post.

606.09 Basis of Payment

The following sentences are added:

The accepted quantity of Delineator Posts will be paid for at the Contract unit price per each which price shall be full compensation for the post, specified delineator or mile marker panel, complete in place.

The accepted quantity of Delineator Posts Removed and Reset will be paid for at the Contract unit price each, which price shall be full compensation for removing and resetting delineator panel or mile marker panel and posts and all incidentals necessary to complete the work.

Payment will be made under:

Pay Item		Pay Unit
606.353	Delineator Post	Each
606.354	Delineator Post - Remove and Reset	Each

SPECIAL PROVISION

SECTION 606

GUARDRAIL

(Guardrail – Remove, Modify and Reset)

606.01 Description

The following paragraphs are added:

This work shall consist of removing existing guardrail elements, component parts and hardware modifying and resetting.

New non-wood offset blocks conforming to NCHRP 350 Test Level 3 shall be installed on all guardrail being reset. The existing steel offset brackets and backup plates shall become the property of the Contractor.

The following Subsection is added:

606.021 General

The modified guardrail shall be installed in accordance with the applicable provisions of the Standard Specifications.

The materials removed shall be utilized in the reset guardrail locations with the following exceptions:

- Existing guardrail posts found to be unfit for reuse, in the opinion of the Resident, prior to or upon pulling;
- Existing steel backup plates when present;
- Existing steel offset brackets shall be replaced with non-wood offset blocks; and,
- Existing W-beam rail elements damaged by traffic and unfit for reuse, in the opinion of the Resident.

This work shall include all modifications to the existing guardrail system that may be necessary to install new non-wood offset blocks including, but not necessarily limited to, the drilling of new holes in the existing posts and cleaning and painting holes with a cold-applied zinc-rich paint. The completed guardrail assembly shall conform to NCHRP 350 Test Level 3.

Existing guardrail components removed, but not reset because of damage, shall become the property of the Contractor. Any materials lost or damaged by the Contractor's operations shall be replaced at no additional cost to the Authority.

Earth around each reset post shall be raked and compacted with a minimum 8 pound hand tamper or an approved device. Holes created due to resetting a post shall be filled with a similar surrounding material and compacted.

606.08 Method of Measurement

The following paragraphs are added:

Guardrail – Remove, Modify and Reset will be measured on a linear foot basis, from center-of-post to center-of-post, for the amount of rail satisfactorily reset.

Steel posts to replace damaged posts shall come from the stockpile of guardrail components to be disposed of, from this Contract and will not be measured separately for payment. If, in the opinion of the Resident, there are no suitable steel posts in the stockpile then steel posts will be measured for payment.

W-beam rail elements to replace damaged rail elements shall come from the stockpile of guardrail to be disposed from this Contract and will not be measured separately for payment. If, in the opinion of the Resident, there are no suitable W-beam rail elements in the stockpile then W-beam rail elements will be measured for payment.

606.09 Basis of Payment

The following paragraphs are added:

The accepted quantity of Guardrail - Remove, Modify and Reset will be paid for at the Contract unit price bid per linear foot. Such payment shall be full compensation for removing, modifying, and resetting guardrail, drilling holes in existing posts, and all equipment, labor and incidentals necessary to complete the work including any necessary modifications to the existing posts.

Furnishing and installing non-wood offset blocks will not be measured separately for payment, but shall be incidental to Item 606.3605, Guardrail - Remove, Modify and Reset, Single Rail, or Item 606.3606, Guardrail - Remove, Modify and Reset, Double Rail.

New steel posts, when measured for payment, will be paid for under Item 606.48, Single Galvanized Steel Post.

New W-beam rail components, when measured for payment, will be paid for under Item 606.178, Guardrail Beam.

Payment will be made under:

Pay Item		Pay Unit
606.3605	Guardrail - Remove, Modify and Reset, Single Rail	Linear Foot
606.3606	Guardrail - Remove, Modify and Reset, Double Rail	Linear Foot

SPECIAL PROVISION

SECTION 606

GUARDRAIL

(Guardrail – Remove, Stack and Dispose)

606.01 Description

The following paragraph is added:

This work shall consist of removing, stockpiling for reuse, and disposing of 'unsuitable for reuse' existing single and double guardrail elements, component parts and hardware as approved by the Resident. Existing guardrail, component parts and hardware suitable for reuse shall be stacked on-site and reused within the project limits as approved by the Resident per Specification 606.3605. At the completion of the Contract, any unused guardrail elements, posts, component parts and hardware suitable for reuse as approved by the Resident shall be transported and stacked at the Crosby Maintenance Area Mile 45.8 Southbound. All remaining existing unsuitable guardrail elements, posts, component parts and hardware shall become the property of the Contractor and shall be removed from turnpike property.

606.08 Method of Measurement

The following paragraph is added:

Guardrail remove, stack, and dispose will be measured on a linear foot basis of guardrail satisfactorily Removed, Stacked and/or Disposed whether single rail or double rail. Double twisted end sections will be measured for payment on a linear foot basis as 25 feet of guardrail removed.

606.09 Basis of Payment

The following paragraphs are added:

The accepted quantity of guardrail remove, stack and dispose will be paid for at the Contract unit price bid per linear foot, which price shall be full compensation for removing, stacking, transporting and disposing all guardrail elements, component parts and hardware, equipment, labor and all incidentals necessary to complete the work. No additional payment will be made for double rail. Stockpiling existing rail elements, posts, and component parts will not be measured separately for payment, but shall be incidental to Item 606.3631.

Payment will be made under:

Pay Item		Pay Unit
606.3631	Guardrail – Remove, Stack and Dispose	Linear Foot

SPECIAL PROVISIONS

SECTION 606

GUARDRAIL

(Widen Shoulders for Guardrail 350 Flared Terminal)

606.01 Description

The following sentence is added:

This work shall consist of widening the existing shoulder at all Guardrail 350 Flared Terminal locations by excavating, furnishing, grading and compacting new shoulder aggregate subbase course gravel, granular borrow, common borrow, and asphalt grindings in accordance with the thickness and typical sections as shown on the Plans or as approved by the Resident.

The following Subsections are added:

606.021 Granular Borrow

Granular borrow shall be material meeting the requirements of Subsection 703.19.

606.022 Fill Material

Fill material shall be existing excavation or common borrow from an outside source.

606.023 Asphalt Grindings

Asphalt grindings shall consist of pavement millings created by the cold planning process. The asphalt grindings stockpile must be viewed and approved by the Resident prior to any grindings being placed at any location.

The grindings shall be reprocessed (crushed) to meet the following gradation:

SIEVE DESIGNATION	GRADING
3/4”	100
1/2”	95 - 100
No. 4	50 - 80
No. 50	18 - 28
No. 200	3 - 10

606.024 Aggregate Subbase Course-Gravel

Aggregate subbase course-gravel shall be material meeting the requirements of Subsection 703.06.

606.051 Compaction - Asphalt Grindings

The asphalt grindings shall be placed and compacted to a minimum thickness of three inches unless otherwise designated by the Resident.

606.09 Basis of Payment

The following paragraphs are added:

The accepted quantity of Widen Shoulder for Guardrail 350 Flared Terminal shall also include the excavation, asphalt grindings, aggregate subbase course gravel and granular borrow. Common borrow will be measured in accordance with Section 203 of these Specifications.

Payment will be made under:

Pay Item		Pay Unit
606.754	Widen Shoulder for Guardrail 350 Flared Terminal	Each

SPECIAL PROVISION

SECTION 606

GUARDRAIL

(Guardrail 350 FLEAT Terminal)

606.01 Description

The following sentence is added:

This work shall also consist of furnishing and installing a Guardrail 350 FLEAT (Flared Energy Absorbing Terminal) as manufactured by Road Systems, Inc., 1507 East 4th Street, Big Spring, Texas 79720, (915) 263-2435, and retroreflective adhesive sheeting in accordance with these Specifications and in reasonably close conformity with the lines and grades as shown on the Plans or as approved by the Resident.

606.02 Materials

The following sentence is added:

The retroreflective sheeting shall meet the requirements of Subsection 719.01, Reflective Sheeting – Minimum ASTM, Type VII.

The following Subsections are added:

606.03 Posts

Wood offset blocks shall be toe-nailed to the wood post to prevent the blocks from moving.

606.041 Reflective Sheeting

The color for the reflective sheeting shall be silver (white) when installed on the outside shoulder.

606.08 Method of Measurement

The second paragraph is amended by the addition of: “Guardrail 350 FLEAT Terminal” after the words “breakaway cable terminal”.

606.09 Basis of Payment

The second paragraph is amended by the addition of: “and Guardrail 350 FLEAT Terminal” after the words “breakaway cable terminal”.

The retroreflective sheeting will not be measured separately for payment, but shall be incidental to the Guardrail 350 FLEAT Terminal item.

Payment will be made under:

Pay Item		Pay Unit
606.80	Guardrail 350 FLEAT Terminal	Each

SPECIAL PROVISION

SECTION 607

FENCES

(Chain Link Fence - 3' High)
(Post Assemblies for Chain Link Fence - 3' High)

607.01 Description

This Subsection is amended by the addition of the following:

This work shall consist of fabricating and erecting 3'-0" high barrier mounted chain link fence and barrier mounted post assemblies for support of chain link fence and/or road signs as shown on the Plans.

607.02 Materials

This Subsection is amended by the addition of the following:

All materials for the chain link fence and Post Assemblies shall be hot dip galvanized after fabrication in accordance with ASTM A123 or A153 as applicable.

All anchor bolts shall be drilled and anchored into concrete barrier using an approved chemical anchoring material selected from the MaineDOT list of qualified anchoring materials. The use of cementitous grouts will not be allowed.

607.06 Method of Measurement

This Subsection is amended by the addition of the following:

Post Assemblies for Sign or Chain Link Fence shall be measured by each unit satisfactorily fabricated and installed.

607.07 Basis of Payment

This Subsection is amended by the addition of the following:

Payment for Post Assembly for Sign or Chain Link Fence shall include furnishing and installing anchor rods and related hardware required to fasten the post assemblies to the precast barrier.

Payment will be made under:

Pay Item		Pay Unit
607.40	Chain Link Fence - 3' High	Linear Foot
607.41	Post Assembly for Sign or Chain Link Fence	Each

SPECIAL PROVISION

SECTION 608

SIDEWALKS

(Curb Ramp Detectable Warning Field)

608.01 Description

The following sentences are added:

This work shall consist of furnishing all materials for and constructing curb ramp detectable warning plates with truncated domes in accordance with these Specifications and in reasonably close conformity with the lines and grades as shown on the Plans or as approved by the Resident.

The following Subsections are added:

608.022 Detectable Warnings Materials

Detectable warning plates shall be new cast iron, as manufactured by one of the manufacturers listed on MaineDOT's Qualified Products List of Cast Iron Detectable Warning Plates. Each plate shall match width of the ramp, unless otherwise indicated in the Contract Documents, and shall have a natural finish. Prior to starting this work, the Contractor shall submit the name of the selected supplier, the manufacturer's literature describing the product, the installation procedures, and routine maintenance requirements. Concrete shall meet the requirements of Section 608.02, materials of the Maine DOT's Standard Specification.

608.04 Detectable Warnings Construction

New plates shall be set square with the curb edge and the base of the truncated domes shall be set flush with adjacent surfaces to allow for proper drainage. All concrete required for detectable warnings shall be cured in accordance with Section 608.03 (f), Curing of the Maine DOT's Standard Specification.

608.05 Method of Measurement

This Subsection is amended by the addition of the following:

Detectable warning plates will be measured for payment by the square foot of actual plate area, only, not including surrounding concrete.

608.06 Basis of Payment

This Subsection is amended by the addition of the following:

The accepted quantity of detectable warnings will be paid for at the Contract Unit Price per square foot for all labor, materials, and equipment required to install the detectable warning

plates, complete and in place. This shall include surface preparation, and removal of concrete or HMA pavement, and necessary replacement concrete. New concrete ramps shall be paid under related sidewalk Pay Items.

Payment will be made under:

Pay Item		Pay Unit
608.26	Curb Ramp Detectable Warning Field	Square Foot

SPECIAL PROVISION

SECTION 609

CURBING

(Concrete Curb Type 2)

609.01 Description

The following sentences are added:

This work shall consist of furnishing and installing Concrete Curb Type 2 in accordance with these Specifications and in reasonably close conformity with the lines, grades and locations as shown on the Plans or as approved by the Resident.

This work shall also consist of all excavation and backfill necessary to install the proposed curb as shown on the Plans.

609.02 Materials

The following sentence is added:

Backfill shall be Aggregate Subbase Course Gravel Type D in conformance with Subsection 304.02.

609.19 Method of Measurement

The following sentences are added:

Concrete Curb Type 2 shall be measured by the linear foot along the front face of the curb at the elevation of the finished grade, complete in place and accepted.

Excavation and backfill associated with curb installation shall be incidental to Item 609.191, Concrete Curb Type 2.

609.10 Basis of Payment

Payment will be made under:

Pay Item		Pay Unit
609.191	Concrete Curb Type 2	Linear Foot

SPECIAL PROVISION

SECTION 610

STONE FILL, RIPRAP, STONE BLANKET AND STONE DITCH PROTECTION

(Stone Check Dams)

610.01 Description

Paragraph (f) is deleted and replaced with the following:

(f) Stone Ditch Protection - Machine placed stones on an earth or granular bedding at stone line ditches, stone downspouts and stone check dams.

This work shall also include the placement, removal and storage of the stone used for temporary and/or permanent stone check dams.

610.032 Placing Stones

The following paragraph is added:

Stone check dams shall be constructed in accordance with the details as shown on the Plans or as approved by the Resident. The stone shall be placed in one operation without special handling or handwork except to create a low point along the top gradient above the ditch flow lines.

The following Subsection is added:

610.033 Removing Stone

The stone for temporary stone check dams shall be removed after vegetation has been established in the ditches as approved by the Resident.

Any damage to the slopes and ditches caused by the removal of the stone check dams shall be repaired by the Contractor at his own expense.

The area directly under the temporary stone check dams shall be loamed, seeded and mulched immediately after the removal of the stone check dams. The loam, seed and mulch will be measured for payment under the appropriate pay items.

Stone used for temporary stone check dams shall be removed and stored and shall become the property of the Contractor at the completion of the Project.

The following Subsection is added:

610.034 Maintenance

Stone check dams shall be maintained by the Contractor. Sediment deposits behind check dams shall be removed when the depth of sediment reaches 50 percent of the check dam height.

610.05 Method of Measurement

The following paragraphs are added:

Stone for Permanent Stone Check Dams will be measured by the cubic yard complete in place.

Stone for Temporary Stone Check Dams will be measured by the cubic yard complete in place. The removal and storage of the stone will not be measured separately for payment, but shall be incidental to the Temporary Stone Check Dam item. This shall include the transporting and unloading of the stone. If this stone is reused on the Project, it will be measured for payment under the appropriate pay item.

The removal and disposal of sediment from behind the Temporary Stone Check Dams will not be measured separately for payment, but shall be incidental to the Stone Check Dam item.

610.06 Basis of Payment

The following sentences are added:

The accepted quantities of stone for Temporary and/or Permanent Stone Check Dams will be paid for at the Contract unit price per cubic yard.

Excavation will not be required for the placement of stone for Stone Check Dams.

Payment will be made under:

Pay Item		Pay Unit
610.181	Temporary Stone Check Dam	Cubic Yard

SPECIAL PROVISION

SECTION 619

MULCH

619.01 Description

The first paragraph is modified by the addition of the following:

"as a temporary or permanent erosion control measure" after the word "mulch".

619.03 General

The first paragraph is deleted and replaced with the following:

Cellulose fiber mulch shall not be used within 200 feet of a wetland or stream. The limits shall be 200 feet upstation and downstation of the wetland or streams as well as the slopes adjacent to the stream. The application of hay or straw mulch with an approved binder shall be used at these locations to prevent erosion.

The use of cellulose fiber mulch will only be allowed at other areas with the approval of the Resident. The Contractor may be required to demonstrate that the material may be applied in a manner that will prevent erosion and will aid in the establishment of permanent vegetation. The Resident reserves the right to require the use of hay or straw mulch at all locations if he determines that the cellulose mulch is ineffective. Cellulose fiber mulch is not acceptable for winter stabilization.

619.04 Applying Mulch

The third paragraph is deleted and replaced with the following:

Newly disturbed earth and ditches shall be mulched or otherwise stabilized by the end of each work day and maintained on a daily basis as described in Subsection 105.8.1.11 (b) in the Special Provisions. The Contractor is responsible for applying temporary mulch as necessary, in accordance with the latest edition of the BMP's, to minimize soil erosion prior to the application of the final slope treatment.

Temporary mulch applied during the winter months of November 1st through April 15th shall be applied at twice the standard temporary stabilization rate or 150 lbs. per 1,000 square feet or three tons/acre. Mulch shall not be spread on top of snow and shall be anchored with mulch netting on slopes steeper than eight percent unless erosion control blankets or erosion control mix is being used on the slopes.

The Contractor shall review his construction operations and staging to determine how much temporary mulching is required.

619.06 Method of Measurement

The following sentence is added:

Temporary Mulch will be paid for by the lump sum.

619.07 Basis of Payment

The following paragraphs are added:

Temporary Mulch will be paid for at the Contract price per lump sum which shall be full compensation for furnishing and spreading the Temporary Mulch as many times as necessary as determined by the Contractor's operations and staging. The price shall also include the additional mulch netting and snow removal necessary during the winter months.

Payment will be made under:

Pay Item		Pay Unit
619.1202	Temporary Mulch	Lump Sum

SPECIAL PROVISION

SECTION 626

FOUNDATIONS, CONDUIT, AND JUNCTION BOXES
FOR HIGHWAY SIGNING, LIGHTING AND SIGNALS

(Precast Junction Box)
(Quazite Junction Box)

626.02 General

The following paragraph is added:

Junction boxes for the electrical and communication conduit associated with the toll equipment and intelligent transportations systems shall be polymer concrete as manufactured by QUAZITE® a division of Hubbell Power Systems. The boxes shall be 36" x 24" and 21" deep. The words ELECTRICAL or COMMUNICATION shall be stamped on the cover as noted in the Plans or directed by the Resident. The boxes shall have an 8,000 lb. load rating. All existing QUAZITE® Junction Boxes in useable condition shall be removed and relocated as directed by the Resident Engineer.

Junction boxes for the electrical associated with highway lighting shall be precast concrete. All existing Precast Junction Boxes in useable condition shall be removed and relocated as directed by the Resident Engineer. New boxes shall have the word LIGHTING stamped on the cover.

626.04 Method of Measurement

The following sentence is added:

Quazite junction box shall be measured by each unit in place and accepted existing or new.

Precast junction box shall be measured by each unit in place and accepted existing or new.

626.05 Basis of Payment

The words, "polymer concrete" shall be added after the words, "precast concrete" in the second sentence of the second paragraph.

Payment will be made under:

Pay Item		Pay Unit
626.12	Quazite Junction Box	Each

SPECIAL PROVISION

SECTION 627

PAVEMENT MARKINGS

(Temporary Painted Pavement Markings)

627.01 Description

The following paragraphs are added:

This work shall consist of furnishing and placing permanent pavement marking paint and temporary painted pavement markings at locations shown on the Plans or as approved by the Resident.

Lines on the turnpike shall be six inches wide. Lines on local roads shall be four inches wide.

Temporary raised pavement markers will not be allowed as a substitute for temporary painted pavement marking lines unless approved by the Resident for use as a transition between the existing pavement markings and the temporary painted pavement marking lines. Temporary raised pavement markings may be used as a substitute for temporary painted pavement markings when the markings are immediately adjacent to a concrete barrier or guardrail such that the markings will not be subject to traffic. The temporary raised pavement markers will be measured for payment as temporary painted pavement markings when their use has been approved by the Resident.

627.02 Materials

This Subsection is deleted in its entirety and replaced with the following:

Pavement marking paint shall be 100 percent acrylic, low VOC, fast trying, white and yellow waterborne traffic paint.

The paint shall be formulated and processed specifically for service as a binder for beads, in such a manner as to produce maximum adhesion, refraction, and reflection. Any capillary action of the paint shall not be such as to cause complete coverage of the beads. The binder shall be 100 percent acrylic, as determined by infrared analysis according to ASTM D2621. VOC levels shall comply with ASTM D3960. Lead percentage shall comply with ASTM D3335. The paint shall be rated as non-combustible.

627.04 General

The third paragraph is deleted and replaced with the following:

Broken lines shall consist of alternate 10 foot painted line segments and 30 foot gaps.

Dotted white lines (DWL) shall consist of alternate three foot painted line segments and nine foot gaps.

627.09 Method of Measurement

Painted pavement marking lines will be measured by the linear foot.

The second and third sentences in the second paragraph are deleted and replaced with the following:

The measurement of broken white lines, both permanent and temporary, will include the gaps when painted. Temporary Painted Pavement Marking lines will be measured for payment by the linear foot.

Removal of the Temporary Painted Pavement Marking lines will be measured for payment as Removing Existing Pavement Markings.

627.10 Basis of Payment

The following paragraphs are added:

The accepted quantity of Painted Pavement Marking lines will be paid at the Contract price per linear foot. This price shall include all labor and materials to furnish, install and maintain the paint markings.

Payment will be made under:

Pay Item		Pay Unit
627.681	Temporary 6 Inch Painted Pavement Marking Line – Yellow or White	Linear Foot

SPECIAL PROVISION

SECTION 627

PAVEMENT MARKINGS

(Temporary Pavement Markings - Tape)

627.01 Description

The following sentence is added:

This work shall also consist of furnishing, placing, maintaining and removing temporary pavement marking tape at for maintenance of traffic purposes as shown on the Plans or as directed by the Resident. Limits are detailed on the Maintenance of Traffic Plans. There shall be no temporary pavement marking paint on surface pavement.

627.02 Materials

The following paragraph is added:

Temporary pavement marking tape shall be Stamark Wet Reflective Removable Pavement Marking Tape Series 710 as manufactured by 3M of St. Paul, Minnesota.

627.04 General

The following paragraphs are added:

Work under this item shall be in accordance with the manufacturer's recommendations. A factory representative from 3M shall be present for the first application of all temporary pavement marking tape to insure proper application and product performance.

The pavement markings shall be applied mechanically to clean dry pavement as recommended by the manufacturer and approved by the Resident.

Temporary pavement markings shall consist of applying six inch solid white, six inch broken white, and six inch yellow reflectorized pavement marking tape for traffic maintenance during construction as shown on the Plans or as directed by the Resident.

Temporary pavement marking tape that loses reflectivity, becomes broken, dislodged or missing during the life of the Contract shall be replaced by the Contractor at no additional cost to the Authority.

627.06 Application

The following paragraphs are added:

For application of the tape, when the pavement temperature is below 50°F, heat shall be applied to the pavement surface, if deemed necessary by the factory representative or as directed by the Resident, at no additional cost to the Authority. Proper primer for the temperatures shall be used as directed by the manufacture.

The pavement mark tape shall be rolled over with a vehicle once application is complete and then scored every 20 feet when placed in long runs to prevent full length unraveling.

627.08 Removing Lines and Markings

The following sentence is added:

Removal of temporary pavement marking tape shall be accomplished without the use of heat, solvents, grinding or sandblasting and in such a manner that no damage to the pavement results.

627.09 Method of Measurement

The following paragraph is added:

Temporary Pavement Markings - Tape will be measured for payment by the linear foot. The measurement of broken lines will not include the gaps.

627.10 Basis of Payment

The following paragraphs are added:

Payment for the Temporary Pavement Markings - Tape will be made at the Contract bid price per linear foot, which price shall include furnishing, installing, maintaining and removing the temporary tape and all materials, labor, equipment and incidentals necessary to accomplish the work. Replacement of Temporary Pavement Markings - Tape, as described above, will be incidental and no separate payment will be made.

Payment will be made under:

Pay Item		Pay Unit
627.73	Temporary 6 Inch Pavement Marking Tape	Linear Foot

SPECIAL PROVISION

SECTION 627

PAVEMENT MARKINGS

(Temporary Pavement Markings – Black Tape)

627.01 Description

The following sentence is added:

This work shall also consist of furnishing, placing, maintaining and removing temporary black pavement marking tape at locations shown on the Plans to cover conflicting existing pavement markings or as directed by the Resident. Limits are detailed on the Maintenance of Traffic Plans. There shall be no temporary pavement marking paint on surface pavement.

627.02 Materials

The following paragraph is added:

Temporary pavement marking tape shall be Stamark Removable Black Line Mask Tape Series 715 as manufactured by 3M of St. Paul, Minnesota.

627.04 General

The following paragraphs are added:

Work under this item shall be in accordance with the manufacturer's recommendations. A factory representative from 3M shall be present for the first application of all temporary pavement marking tape to insure proper application and product performance.

The pavement markings shall be applied mechanically to clean dry pavement as recommended by the manufacturer and approved by the Resident.

Temporary pavement markings shall consist of applying six inch solid black pavement marking tape for traffic maintenance during construction as shown on the Plans or as directed by the Resident. The tape shall be cut to the varying lengths necessary to cover the conflicting painted pavement marking.

Temporary pavement marking tape that becomes broken, dislodged or missing during the life of the Contract shall be replaced by the Contractor at no additional cost to the Authority.

627.06 Application

The following paragraphs are added:

For application of the tape, when the pavement temperature is below 50°F, heat shall be applied to the pavement surface, if deemed necessary by the factory representative or as directed

by the Resident, at no additional cost to the Authority. Proper primer for the temperatures shall be used as directed by the manufacture.

The pavement mark tape shall be rolled over with a vehicle once application is complete and then scored every 20 feet to prevent full length unraveling.

627.08 Removing Lines and Markings

The following sentence is added:

Removal of temporary pavement marking tape shall be accomplished without the use of heat, solvents, grinding or sandblasting and in such a manner that no damage to the pavement results.

627.09 Method of Measurement

The following paragraph is added:

Temporary Pavement Markings - Tape will be measured for payment by the linear foot placed. The measurement of broken lines will not include the gaps.

627.10 Basis of Payment

The following paragraphs are added:

Payment for the Temporary Pavement Markings - Tape will be made at the Contract bid price per linear foot installed, which price shall include furnishing, installing, maintaining and removing the temporary tape and all materials, labor, equipment and incidentals necessary to accomplish the work. Replacement of Temporary Pavement Markings - Tape, as described above, will be incidental and no separate payment will be made.

Payment will be made under:

Pay Item		Pay Unit
627.731	Temporary 6 Inch Black Pavement Marking Tape	Linear Foot

SPECIAL PROVISION

SECTION 627

PAVEMENT MARKINGS

(Temporary Raised Pavement Markers)

627.01 Description

The following sentences are added:

This work shall consist of furnishing, placing and removing temporary raised pavement marking at locations as shown on the Plans or as approved by the Resident.

Temporary raised pavement markings may be used to delineate travel lanes after placement of pavement.

627.02 Materials

The second paragraph is deleted and replaced with the following:

The temporary raised pavement markers shall be white or yellow one way, or two way, markers (Type Tom W-1, Y-1, Y-2, Grade WZ) as distributed by Davidson Plastics Co. (DAPCO), Kent, WA, or an approved equal. Colors shall conform to MUTCD requirements.

627.04 General

The following sentence is added:

Temporary raised pavement marker that lose reflectivity, becomes broken, dislodged or missing during the life of the Contract shall be replaced by the Contractor at no additional cost to the Authority.

627.09 Method of Measurement

The following sentence is added:

Temporary Raised Pavement Markers will be measured by each unit, complete in place, maintained and accepted.

627.10 Basis of Payment

The following paragraphs are added:

The accepted quantity of Temporary Raised Pavement Markers will be paid for at the Contract price each. This price shall include all labor and materials to furnish, install, maintain, and remove the markers.

Payment will be made under:

Pay Item		Pay Unit
627.812	Temporary Raised Pavement Markers	Each

SPECIAL PROVISION

SECTION 631

EQUIPMENT RENTAL

631.02 General

The following sentences are added:

Jackhammer - To be included under category of air tool.

Bucket truck - Approved one man, able to reach 30 feet high bucket truck with 10 feet lateral extension.

Scissor Lift - Hydraulic scissors lift with a minimum capacity of three workers.

Electrician - Licensed by State of Maine.

Electrician's Apprentice - Enrolled in an accredited program.

631.08 Basis of Payment

The following paragraphs are added:

Such related costs such as use of hand tools, meal and room expenses, benefits, insurance, retirement, travel time, overtime, overhead and profit will not be measured separately for payment, but shall be incidental to the unit price for the bid item.

Note: For extra materials required for miscellaneous work the General Contractor shall be allowed 15 percent overhead and profit on the cost of materials and rental equipment (not covered by miscellaneous unit items). Rates for Subcontractor owned equipment required to perform miscellaneous work, not otherwise provided for in the Contract, shall be negotiated.

The General Contractor will be allowed 10 percent overhead and profit on the subcontractor's cost of materials, and subcontractors rented equipment (not covered by miscellaneous unit items). The General Contractor shall include his markup on the Subcontractor's labor in the pay items.

The labor hour bid items shall include labor and labor burdens, benefits, supervision, transportation, travel time and allowances, overnights, small tools and equipment, subcontractor overhead and profit, and General Contractor overhead and profit. Time will be measured from the start of work to the stoppage of work at the project site; less the time taken for lunch. No deduction of time will be taken for the standard morning "coffee break".

Payment will be made under:

Pay Item		Pay Unit
631.50	Jackhammer (Air Tool Including Operator)	Hour
631.51	Bucket truck	Hour
631.52	Scissor Lift	Hour
631.53	Electrician	Hour
631.54	Electrician’s Apprentice	Hour

SPECIAL PROVISION

SECTION 633

PROPANE GAS UTILITY

(Propane Service Line)

633.01 Description

This work shall include installing a new service line and the reconnection of the propane gas service from the propane tanks to the existing gas connection on the plaza building and the emptying and removal of the existing gas service line as shown on the Plans.

633.03 Propane Tank Relocation

After completing installation of the new service line from the plaza building to the tanks, the Contractor shall coordinate with Downeast Energy to drain the service line and for the reconnection of the tanks to the new service line.

633.04 Method of Measurement

Propane Service Line satisfactorily placed and accepted shall be measured by the linear foot.

633.05 Basis of Payment

The accepted quantity of Propane Service Line will be paid for at the Contract unit price per linear foot. Payment shall be full compensation for excavation, backfill material and installation of the new service line and all equipment, labor and incidentals necessary to complete the work.

Payment will be made under:

Pay Item		Pay Unit
633.021	Propane Service Line	Linear Foot

SPECIAL PROVISION

SECTION 634

HIGHWAY LIGHTING

(Remove and Reset Light Standard)

634.01 Description

The following paragraph is added:

This work shall consist of removing existing light standards, supply and install new LED luminaires, and any breakaway devices and resetting with all associated appurtenances, and wiring system on to new concrete foundations at locations as shown on the Plans.

634.021 Materials

The following paragraphs are added:

Underground junction boxes shall be precast concrete (Item 626.11). Provide manufacturer's listed cover for each junction box with logo stating "LIGHTING". All pull boxes are to be furnished as detailed on the Plans.

Splices in junction boxes shall be made with ILSCO USPA-350-SS-DB Safetysub Watertight Direct Bury Splice Wire Range 350MCM-10-STR connectors for the appropriate wire count only. Splices in hand holes shall be Ideal SLK Disconnect Fuse Kit 30-S2212.

Replacement LED fixtures shall be one of the following:

- Model # ATB2-80BLEDE10-MVOLT-R3-PCSS, as manufactured from American Electric
- Model # VP-L/96NB-280/4K/T3/UNV/PCR-TL/SF2/GYS from Beacon Lighting
- Model # RVM-270W/60LED4K-LE3-UNIV-PH8-GY3 from Philips Lighting

634.04 Cable Installation

The reset light standards shall be wired with new wiring.

634.051 Removing Light Standards

The first paragraph is deleted and replaced with the following:

Before removing light standards, the luminaires shall be removed from the light standard and stacked.

The second paragraph is deleted and replaced with the following:

Care shall be exercised in removing, transporting and stacking the light standards and luminaires. The Contractor will be required to replace, at his own expense, all equipment damaged or destroyed by his operation.

The Contractor will not be allowed to remove the existing light standards until all new foundations, wiring, conduits and junction boxes have been installed. Breakaway devices shall be required on all proposed light standards. If breakaway devices do not exist on the existing light standard, new breakaway devices shall be supplied and installed. The Contractor will be allowed one (1) working day to remove and reset the light standards, including replacing luminaires and testing. At a minimum, existing light levels shall be maintained while new or relocated light standards are being installed and made fully operational.

If an existing light pole is damaged and should not be reset as directed by the Resident a replacement light pole will be supplied by the Authority.

634.06 Luminaires

In the second paragraph "12" is replaced with "10" and "THHN" replaced with "XHHW" to read:

"Number 10 wires AWG copper stranded XHHW...".

634.092 Method of Measurement

The following sentence is added:

Replacement LED Fixture, Remove and Reset Light Standards will be measured by the single unit, complete in place and accepted.

634.093 Basis of Payment

In the second sentence of the first paragraph, the words, "LED fixture, pole wiring" shall be added after the words, "bracket arm".

The following paragraphs are added:

The accepted quantity of Remove and Reset Light Standard will be paid at the Contract unit price each for the number of units that are removed and reset. Payment shall be full compensation for the removal and resetting of the light standard, removing and stacking luminaires, resetting the breakaway device or installing a new breakaway device, new pole wiring to the new LED fixture and all incidentals necessary to complete the work.

The accepted quantity of Wiring will be paid for at the Contract unit price per linear foot for the respective size of Wire. Payment shall be full compensation for supplying the wire, installation, splicing and any other incidentals necessary to complete the work.

If a new pole is supplied by the Authority the Contractor will be paid labor time to retrieve it from the MTA sign shop at MM 58.0 NB.

Payment will be made under:

Pay Item		Pay Unit
634.208	Remove and Reset Light Standard	Each

SPECIAL PROVISION

SECTION 639

ENGINEERING FACILITIES

(Field Office, Type A)

639.04 Field Offices

This Subsection is amended by the addition of the following:

The Resident's Field Office shall be furnished and installed by the Contractor. The Contractor shall be responsible for furnishing and maintaining electricity, propane heat, and wireless internet service for the entire duration of the Contract, which includes periods of time which Work has been suspended. All of the costs associated with the above shall be the responsibility of the Contractor.

639.09 Telephone

This subsection is deleted in it entirety.

639.11 Basis of Payment

This Subsection is amended by the addition of the following:

The accepted quantity of field office will be paid at the Contract unit price each which will be full payment for providing electricity, propane heat, and wireless internet service. No additional markup will be allowed.

SPECIAL PROVISION

SECTION 643

TRAFFIC SIGNALS

(Lane Use Signal Installation)

643.01 Description

This work shall consist of supply and installation of replacement lane use signals (Non-Flashing). All equipment, installation of equipment and other incidental work shall conform to the latest applicable provisions of: NEC, MUTCD, NESC, NEMA, and the ITE Standards for traffic control equipment. All work shall be done to the satisfaction of the Resident. The meaning of specific terms shall be as defined in MUTCD, NESC, and the ITE Standards for traffic control equipment.

643.02 Materials

The replacement lane use signal heads shall be Trans-Tech DOT2424RG-175 or approved equal. See Appendix F for technical product details.

643.03 Installation

The replacement lane use signal housing and LED signal shall be installed in the same location as the existing lane use signal and the existing wiring shall be used. New Pelco (or equal) mounting brackets may be needed and will be incidental to the installation of the new lane use signal.

643.04 Method of Measurement

Replacement lane use signals will be measured by each unit, installed and accepted.

643.05 Basis of Payment

Replacement Lane Use Signals will be paid for at the Contract unit price each which payment shall be full compensation for the furnishing and installation of new lane use signals, and all other materials, labor, tools, equipment and incidentals necessary to complete the work.

Payment will be made under:

Pay Item		Pay Unit
643.711	Lane Use Signal Installations	Each

SPECIAL PROVISION

SECTION 645

HIGHWAY SIGNING

(Remove and Reset Sign)
(Remove and Stack Sign)

645.07 Demounting and Reinstalling Existing Signs and Poles

The following paragraphs are added:

At locations noted on the Plans, existing ground-mounted signs are designated to be removed and reset. This work shall consist of removing the sign panels, removing and resetting or disposing of the existing wood post and resetting the sign panels on a new wood post if required in the appropriate specified location. The Resident will determine if a new wood post is required.

At locations as shown on the Plans, existing ground-mounted signs are designated to be removed and stacked. This work shall consist of removing and delivering existing sign panels, posts, concrete foundations and breakaway devices to the MTA Sign Shop at Mile 58 NB. Excavations shall be backfilled and ground restored to the satisfaction of the Resident.

Any existing signs not shown on the Plans are to remain in their existing condition unless directed otherwise by the Resident.

645.08 Method of Measurement

The following sentences are added:

Removing and Resetting existing ground-mounted signs shall be measured as complete units each, removed, reset and accepted.

Removing and stacking existing signs shall be measured as complete units each removed and stacked.

645.09 Basis of Payment

The following paragraphs are added:

The accepted signs removed and stacked shall be paid for at the Contract unit price each as specified. Such price shall include removing and stacking sign panels and supports at the location specified.

The accepted signs Removed and Reset will be paid for at the Contract unit price each as specified. Such price will include removing and resetting sign panels, removing and resetting or disposing existing wood post and resetting the sign panels on the existing or new wood post and new hardware as required to complete the sign installation. Any signs or supports damaged by

the Contractor shall be replaced by him with new signs or supports conforming to the applicable Specifications at no additional cost to the Authority.

Payment will be made under:

Pay Item		Pay Unit
645.105	Remove and Stack Sign	Each
645.109	Remove and Reset Sign	Each

SPECIAL PROVISION

SECTION 645

HIGHWAY SIGNING

(Remove and Stack Canopy Mounted Sign)

645.01 Description

The following paragraph is added:

Existing canopy mounted signs are defined as signs fabricated from sheet aluminum as identified in the Plans. Each sign is mounted on framing supports on top of the toll plaza canopy with an attached luminaire. There are two static signs and two rotating signs to be stacked at the MTA's Sign Shop at Mile 58 NB at the end of phase 4.

The following Subsection is added:

645.08 Method of Measurement

The following sentence is added:

Remove and Stack Canopy Mounted Signs shall be measured as complete units each removed and stacked.

645.09 Basis of Payment

The following paragraphs are added:

The accepted Remove and Stack Canopy Mounted Signs shall be paid for at the Contract unit price each as specified. Such price shall include removing sign panels, luminaires, and hardware framing supports, gears, sign controllers and all electrical components associated with the rotating signs and delivering to the MTA's Sign Shop at Mile 58 NB. This includes all hardware, labor and equipment necessary to complete this task.

Any signs, luminaires, or supports damaged by the Contractor shall be replaced with new signs, luminaires, or supports conforming to the applicable Specifications at no additional cost to the Authority.

Payment will be made under:

Pay Item		Pay Unit
645.107	Remove and Stack Canopy Mounted Sign	Each

SPECIAL PROVISION

SECTION 645

HIGHWAY SIGNING

(Overhead Mainline Sign)
(Cantilever Mainline Sign)
(Bridge Overpass-Mounted Mainline Sign)

645.01 Description

The following sentence is added:

This work shall include removing, stacking and reinstalling existing parapet-mounted aluminum bridge rail at the Falmouth Road Underpass as required to facilitate installation of the Bridge Overpass-Mounted Sign Supports.

645.021 Materials

The following paragraph is added at the end of this section:

Anchor bolts shall be anchored in place using an approved chemical anchoring system selected from MaineDOT's list of approved anchoring materials.

645.024 Bridge, Cantilever and Butterfly Support Structure Foundations

The second paragraph of this section is deleted and replaced with:

Soil borings will be provided to the Contractor for consideration during foundation design. All costs associated with the work required to design the footing and prepare submittals shall be incidental to related Contract items. All unsuitable material (peat, organic material, material that has been dumped, etc.) within the limits of a footing or drilled shaft must be removed at the direction of the Resident. Concrete for the footing shall be placed immediately after excavation to prevent water from collecting in the excavated area. The structural design of foundations shall meet the requirements of the current edition of AASHTO "Standard Specifications for Highway Bridges". Concrete shall be Class AAA in accordance with Section 502 - Structural Concrete. Drilled shaft foundation holes, except in ledge, shall be excavated by auger method to the neat line of the outside dimensions of the footing without disturbing the soil around or below the proposed footing. Precast foundations shall not be permitted. In areas where rock or ledge is encountered above the proposed bottom of footing, the Contractor will have the option of removing rock and placing the footing at the design depth shown on the Contractor's Working Drawings, or constructing a grouted rock-anchored 6-136 foundation system. This rock-anchored system shall be designed by the Contractor and approved by the Authority Back fill for pedestal foundations shall be granular borrow for underwater back fill meeting the requirements of Section 703.20 - Gravel Borrow, of the Standard Specification. The granular borrow shall be placed in layers not exceeding six (6) inches in depth before compaction. Each layer of back fill shall be thoroughly compacted by use of power tampers to at least 95% of the

maximum density as measured in the field per AASHTO T191 or by an approved method using calibrated nuclear device. All back filling and compacting shall be in accordance with the applicable provisions of Section 206, of the Standard Specifications.

The Contractor shall submit three copies of all foundation design work, structural and geotechnical, together with computations and plans used for design purposes, as specified in Section 645.023. The plans shall be stamped by a Maine Professional Engineer.

645.08 Method of Measurement

The following sentence is added:

Removing, stacking and reinstalling existing parapet railing will not be measured separately for payment, but shall be incidental to the related Bridge Overpass Mounted Sign Support item.

645.09 Basis of Payment

Payment will be made under:

Pay Item		Pay Unit
645.121	Overhead Guide Sign: (Sta. 132+50)	Lump Sum
645.122	Overhead Guide Sign: (Sta. 150+50)	Lump Sum
645.131	Bridge Overpass-Mounted Guide Sign: (Sta. 80+60)	Lump Sum
645.151	Cantilever Guide Sign: (Sta. 107+00)	Lump Sum
645.152	Cantilever Guide Sign: (Sta. 120+00)	Lump Sum
645.153	Cantilever Guide Sign: (Sta. 177+00)	Lump Sum
645.154	Cantilever Guide Sign: (Sta. 193+50)	Lump Sum

SPECIAL PROVISION

SECTION 645

HIGHWAY SIGNING

(Variable Speed Limit Sign)

645.01 Description

The following sentence is added:

This work shall also include the fabrication and installation of new Variable Speed Limit Signs on the NB and SB Space Frame.

645.021 Materials

The following paragraph is added at the end of this Subsection:

The Variable Speed Limit Sign shall be manufactured by Daktronics, Vanguard model VS-5220 VSLS. A detail will be provided in Appendix F.

645.08 Method of Measurement

The following sentence is added:

Variable Speed Limit Signs will be measured by each unit in place.

645.09 Basis of Payment

Payment will be made under:

Pay Item		Pay Unit
645.155	Variable Speed Limit Sign	Each

SPECIAL PROVISION

SECTION 645

HIGHWAY SIGNING

(Remove and Reset Mainline Sign)

645.01 Description

The following paragraphs are added:

This work shall consist of removing and resetting the existing highway guide signs as shown on the Plans. The work includes a combination of the following: removal, resetting, modifying, furnishing, and disposal of concrete foundations, steel posts, wood posts, and breakaway foundations. Existing materials from the existing sign installation may be reused to reset the existing sign or another sign.

The signs shall remain visible to turnpike drivers at all times unless other provisions have been approved.

645.02 General

The following sentences are added:

New concrete foundations shall conform to the requirements of Section 626 and shall be in conformance with the Maine Department of Transportation Standard Details.

Breakaway devices shall be B525 or B650 as manufactured by Transpo Industries, Inc. (www.transpo.com).

645.05 Signs

The following paragraphs are added:

The removal and resetting of the mainline signs shall be completed in accordance with the details as shown on the Plans. The Contractor shall keep all signs visible to turnpike drivers except for the period of time necessary to actually complete the relocation. The sign panel shall not be removed and relocated until after the proposed sign support system (foundation and posts) have been installed in the final location. One (1) working day is allowed for the sign relocation.

The Contractor may elect to utilize all new materials or reuse materials from other sign locations that have previously been reset. The cutting of structural steel post shall be accomplished by mechanical means. The use of burning to cut shall not be allowed. One single connection will be allowed to extend a post to the required length. A full penetration weld or a bolted splice shall be required for the connection. The Contractor shall submit his proposed connection method to the Resident for approval. Any damaged area shall be repaired with two coats of zinc-rich chromium paint. Material removed from an existing sign location and not reused at a proposed sign location shall become the property of the Contractor.

All signs posts on breakaway foundations shall be installed in accordance with the Specifications for breakaway devices. Multipost signs shall be constructed with the required splice as in accordance with the Plans.

645.08 Method of Measurement

The following sentence is added:

Remove and Reset Mainline Sign shall be measured for payment as one lump sum for each sign number as shown on the Plans.

645.09 Basis of Payment

The payment for Remove and Reset Mainline Sign shall be at the Contract lump sum price for each sign number. This payment shall be full compensation for furnishing all new materials, removing, modifying resetting existing material and signs, and all labor and equipment necessary to complete the installation in accordance with the details as shown on the Plans. This may include furnishing and installing new materials such as structural steel, concrete foundations, and single and multipole breakaway devices. Compensation for the excavation and backfill for the concrete foundation, as well as removal of the concrete foundation, shall be included in this item.

Payment will be made under:

Pay Item		Pay Unit
645.501	Remove and Reset Mainline Sign No. 1	Lump Sum
645.502	Remove and Reset Mainline Sign No. 2	Lump Sum
645.503	Remove and Reset Mainline Sign No. 3	Lump Sum
645.504	Remove and Reset Mainline Sign No. 4	Lump Sum
645.505	Remove and Reset Mainline Sign No. 5	Lump Sum
645.506	Remove and Reset Mainline Sign No. 6	Lump Sum
645.507	Remove and Reset Mainline Sign No. 7	Lump Sum
645.508	Remove and Reset Mainline Sign No. 8	Lump Sum
645.509	Remove and Reset Mainline Sign No. 9	Lump Sum
645.512	Remove and Reset Mainline Sign No. 12	Lump Sum
645.513	Remove and Reset Mainline Sign No. 13	Lump Sum
645.514	Remove and Reset Mainline Sign No. 14	Lump Sum
645.516	Remove and Reset Mainline Sign No. 16	Lump Sum

SPECIAL PROVISION

SECTION 648

FLAGPOLE

648.01 Description

This work shall consist of removing, storing and resetting the existing flagpole and constructing a new concrete foundation in accordance with these Specifications, and in reasonably close conformity with the lines and grades shown on the Plans or as approved by the Resident.

648.02 Materials

Concrete shall be Class "A" cement concrete (4000 PSI).

Reinforcing steel shall meet the requirements of Section 503.

648.03 General

When flagpole is to be stored on-site for an extended period before installation, the pole shall be stored in a dry place, off the ground.

648.04 Method of Measurement

The removed and reset flagpole will be measured by each unit.

648.05 Basis of Payment

The accepted quantity of flagpole will be paid for at the Contract unit price each which payment shall be full compensation for removing, storing and resetting the flagpole and all accessories, foundation including anchor bolts, reinforcing steel, rubbing, penetration sealer, excavation, backfill, compaction, tools, equipment, labor and all incidentals necessary to complete the work.

Payment will be made under:

Pay Item		Pay Unit
648.01	Remove and Rest Flagpole	Lump Sum

SPECIAL PROVISION

SECTION 652

MAINTENANCE OF TRAFFIC

(General)

652.2 Materials

The first sentence in the second paragraph is replaced with the following:

Super high intensity fluorescent retroreflective sheeting, ASTM 4956 – Type VII, Type VIII or Type IX (Prismatic), is required for all construction signs.

652.2.3 Flashing Arrow Board

Delete the existing five (5) paragraphs and replace with the following: Flashing Arrow Panels (FAP) must be of a type that has been submitted to AASHTO's National Transportation Product Evaluation Program (NTPEP) for evaluation and placed on the Maine Department of Transportations' Approved Products List of Portable Changeable Message Signs & Flashing Arrow Panels.

FAP units shall meet requirements of the current Manual on Uniform Traffic Control Devices (MUTCD) for Type "C" panels as described in Section 6F.56 - Temporary Traffic Control Devices. The FAP shall have matrix of a minimum of 15 low-glare, sealed beam, Par 46 elements capable of either flashing or sequential displays as well as the various operating modes as described in the MUTCD, Chapter 6-F. If an FAP consisting of a bulb matrix is used, each element should be recess-mounted or equipped with an upper hood of not less than 180 degrees. The color presented by the elements shall be yellow.

FAP elements shall be capable of at least a 50 percent dimming from full brilliance. Full brilliance should be used for daytime operation and the dimmed mode shall be used for nighttime operation. FAP shall be at least 2.4 M x 1.2 M [96 inch x 48 inch] and finished in non-reflective black. The FAP shall be interpretable for a distance not less than 1.6 km [1 mile].

Operating modes shall include, flashing arrow, sequential arrow, sequential chevron, flashing double arrow, and flashing caution. In the three arrow signals, the second light from the arrow point shall not operate.

The minimum element on-time shall be 50 percent for the flashing mode, with equal intervals of 25 percent for each sequential phase. The flashing rate shall be not less than 25 or more than 40 flashes per minute. All on-board circuitry shall be solid state.

Primary power source shall be 12 volt solar with a battery back-up to provide continuous operation when failure of the primary power source occurs, up to 30 days with fully charged batteries. Batteries must be capable of being charged from an onboard 110 volt AC power source and the unit shall be equipped with a cable for this purpose.

Controller and battery compartments shall be enclosed in lockable, weather-tight boxes. The FAP shall be mounted on a pneumatic-tired trailer or other suitable support for hauling to various locations, as directed. The minimum mounting height of an arrow panel should be 2.1 M [7 feet] from the roadway to the bottom of the panel.

The face of the trailer shall be delineated on a permanent basis by affixing retro-reflective material, known as conspicuity material, in a continuous line as seen by oncoming drivers.

A portable changeable message sign may be used to simulate an arrow panel display."

652.2.4 Other Devices

The eighth paragraph is deleted and replaced with Special Provision Section 652, Maintenance of Traffic (Portable Changeable Message Sign).

652.2.5 Safety Vests

This Subsection is amended by the addition of the following:

All jobsite personnel shall wear a safety vest labeled as ANSI 107-2004 standard performance for Class 3 risk exposures. This requirement also applies to truck drivers and equipment operators when out of an enclosed cab.

652.2.6 Signs

The use of temporary plaques to cover text or to change text will not be allowed. All signs shall have a uniform face.

652.4 Flaggers

Replace the first paragraph with the following; "The Contractor shall furnish flaggers as required by the TCP or as otherwise specified by the Resident. All flaggers must have successfully completed a flagger test approved by the MaineDOT and administered by a MaineDOT-approved Flagger-Certifier who is employing that flagger. All flaggers must carry an official certification card with them while flagging that has been issued by their employer. Flaggers shall wear safety apparel meeting ANSI 107-2004 Class 3 risk exposure that clearly identifies the wearer as a person, and is visible at a minimum distance of 300 m [1000 ft], and shall wear a hardhat with 360° retro-reflectivity. Retro-reflective or flashing SLOW/STOP paddles shall be used, and the flagger station shall be illuminated to assure visibility in accordance with 652.6.2."

Second paragraph, first sentence; change "…have sufficient distance to stop before entering the workspace." to "…have sufficient distance to stop at the intended stopping point." Third sentence; change "At a spot obstruction…" to "At a spot obstruction with adequate sight distance,…".

Fourth paragraph, delete and replace with "Flaggers shall be provided as a minimum, a 10 minute break, every two-hours and a 30-minute or longer lunch period away from the work station. Flaggers may only receive one unpaid break per day; all other breaks must be paid.

Sufficient certified flaggers shall be available onsite to provide for continuous flagging operations during break periods. If the flaggers are receiving the appropriate breaks, breaker flagger(s) shall be paid starting two-hours after the work begins and ending two-hours before the work ends. A maximum of one breaker per six flaggers will be paid (one breaker flagger for two to six flaggers, two breaker flaggers for seven to 12 flaggers, etc)".

652.63 Traffic Coordinator

The Contractor shall submit to the Resident for approval a list of traffic control personnel assigned to the Project including qualifications, certifications and experience.

The Traffic Coordinator duties shall include, but are not necessarily limited to:

a. Developing, in conjunction with the Resident and Project superintendent, a traffic control program for the days' work activities which will facilitate traffic in a safe and efficient manner;

b. Insure that all traffic control implements (signs, arrow boards, barrels, etc.) are on-site so the traffic program can be implemented effectively;

c. Insure a safe and effective setup or take-down of all signing implements to least impact the traveling motorist; and,

d. Working knowledge of construction signing/traffic control requirements in conformance with the latest issued Manual on Uniform Traffic Control Devices.

SPECIAL PROVISION

SECTION 652

MAINTENANCE OF TRAFFIC

(Specific Project Maintenance of Traffic Requirements)

This Specification describes the specific project maintenance of traffic requirements for this Project.

The following minimum traffic requirements shall be maintained:

Falmouth Road Traffic Control Requirements

Two-lane traffic shall be maintained Falmouth Road at all times, unless otherwise approved by the Resident. Alternating one way work zones will be allowed for the installation of Bridge Overpass-Mounted Guide Sign Supports, if requested in advance. Shoulder closures and alternating one way work zones on Falmouth Road shall be in accordance with the latest version of the Manual of Uniform Traffic Control Devices (MUTCD) and details shown on the Plans with the exception of installing and removing traffic control devices. The Resident shall notify the Town of Falmouth.

Temporary Toll Plaza Lane Closures

Two toll plaza lanes shall remain open at all times from 05:00 a.m. to 07:00 p.m. unless approved.

Temporary toll plaza lane closures may be required for lanes not designated for long term closure on the Maintenance of Traffic Control Plans. The following minimum requirements shall be maintained:

Plaza lanes shall remain available for opening at all times except when the Contractor is performing work in or near toll lanes such that appropriate access to the lane entry or departure is constrained by Contractor activities, or adjacent to or directly over the plaza lanes. A plaza lane closure is required when danger to the traveling public, other Authority contractors or Authority employees may exist. The potential of any material falling onto the roadway shall be considered a potential danger. This shall include, but not necessarily be limited to, demolition debris, water, tools, equipment and material.

A plaza lane closure will be required whenever men or equipment will be present in a plaza lane or when regular vehicular access into or out of a toll lane is impeded by the Contractor. The Authority may also require adjacent lanes to be closed to protect the traveling public or Authority employees. Temporary plaza lane closures are allowed from 07:00 p.m. to 05:00 a.m.. These hours may be adjusted by the Resident based on the daily traffic volumes. Plaza lane closures not completely removed by the time specified will be subject to a rental fee of $500.00 per 10 minutes for every 10 minute increment beyond the specified ending time for each lane. Temporary plaza lane closures will not be allowed during periods of inclement weather as determined by the

Authority and will not be allowed on Saturday, Sundays, and Holidays. The Authority reserves the right to order removal of approved temporary plaza lane closures.

Requests for temporary traffic lane closures shall be submitted to the Resident for approval. The Resident is required to receive approval from the Maine Turnpike Authority's Plaza Supervisor for all plaza lane closures. The request shall be submitted to the Plaza Supervisor by the Resident at least one (1) working week prior to the day of the requested plaza lane closure. All requests must be received by 12:00 p.m. noon to be considered as received on that day. Requests received after 12:00 p.m. shall be considered as received the following day. The Contractor shall plan the work accordingly.

Wide load lanes (Toll Plaza Lanes 1 and 6) may be closed when wide loads are not permitted by on the Turnpike by the Authority after Phase 1 and must be scheduled two (2) weeks in advance with both tolling and engineering. The temporary/short duration wide load lane closures must be scheduled one (a) week in advance with both toll and engineering, and occur outside of the various Holiday restrictions.

Maine Turnpike Traffic Control Requirements

Two lanes of traffic shall be maintained on the mainline in both northbound and southbound directions except when one lane of traffic is allowed by these Specifications and Plans.

Construction activities will require a combination of lane closures on the mainline and at the Falmouth Spur toll plaza. Maintenance of traffic control plans have been developed for Phases 1 and 2 to facilitate the construction within the plaza area. For all other operations, standard lane or shoulder closures shall be developed by the Contractor from the typical details provided and shall not conflict with traffic control setups for Phases 1 and 2. This plan shall be approved by the Resident prior to start of work. Unless approved by the Resident, all operations requiring right lane or shoulder closures shall not occur during Phase 2. Travel lanes may not be impeded by traffic control devices until the time frames specified for each activity.

Work activities within established work zones are allowed 24-hours a day, with the exception of sheet pile driving, erection or removal of structural steel and equipment moves.

There shall be a minimum of one lane of mainline traffic maintained in each direction at all times. A minimum travelway width of 14 feet is required for all open lanes during construction operations. Lanes may be striped no narrower than 11 feet wide.

Erection or removal of structural steel and overhead signs is allowed nightly between the hours of 10:00 p.m. and 5:00 a.m. with traffic stoppages (maximum stoppage of 25 minutes). Traffic stoppages are not allowed during holidays.

All stoppages, equipment moves, lane closures and shoulder closures are subject to Subsection 101.2, Definition, and holiday periods.

Temporary mainline or toll lane closures shall be removed if construction is not ongoing. Unattended lane closures are not allowed unless included in the Contract language or approved by the Resident as a long-term traffic control operation.

652.7 Method of Measurement

The following paragraph is added:

Traffic control devices required to complete the work will be measured for payment under their respective pay items. Installation, maintenance, and removal of traffic setups and the Contractor's dedicated traffic coordinator will not be measured separately for payment, but shall be incidental to Item 652.361, Maintenance of Traffic Control Devices.

SPECIAL PROVISION

SECTION 652

MAINTENANCE OF TRAFFIC

(Temporary Mainline Lane Closures)
(Lane Closure Installation and Removal Procedures)
(Temporary Mainline Shoulder Closures)
(Work Requiring Complete Stoppages of Traffic)
(Short-Term or Work Hour Speed)

This Section outlines the minimum requirements that shall be maintained for working on, over, or adjacent to the Maine Turnpike roadway.

General

Two travel lanes in each direction (each direction being 24 feet wide shall be maintained at all times except while performing work in a designated lane, directly over or adjacent to traffic, and during the placement and removal of traffic control devices).

Temporary Mainline Lane Closures

A minimum width of 14 feet is required for all lane closures.

A lane closure is required when a danger to the traveling public may exist. The potential of any material falling onto the roadway shall be considered a potential danger. This shall include, but not necessarily be limited to, demolition debris, water, tools, equipment and materials.

A lane closure will be required whenever workers or equipment will be present within four feet of a travel lane. Dump trucks shall be parked at least six (6) feet from the travel lane when being loaded. Temporary lane closures will only be allowed at the times outlined in Special Provision Section 652, Specific Project Maintenance of Traffic Requirements. These hours may be adjusted based on the traffic volume each day by the Resident.

The lane closure setup may not begin until the beginning time specified. Lane closures that are setup early or that remain in place outside of the approved period shall be subject to a lane rental fee of $500 per five minutes for every five minutes outside of the approved time. The installation of the construction signs will be considered setting up the lane closure. Removal of the last construction sign will be considered the removal of a lane closure. Construction signs shall be installed immediately prior to the start of the lane closure and shall be promptly removed when no longer required. The installation and removal of a lane closure including signs, channelizing devices and arrow boards shall be a continuous operation. The Authority reserves the right to order removal of an approved lane closure.

The Authority desires to minimize the number of daytime lane closures and the number of times that a complete stoppage of traffic is required. The Contractor is encouraged to schedule their work so that the interference with the flow of traffic will be minimized. Lane

closures will not be allowed until traffic associated with complete stoppages of traffic has cleared. Complete stoppages of traffic or lane closures may not be allowed on a particular day if another complete stoppage of traffic has been previously approved for another project.

The following is a partial list of activities requiring lane closures. Lane closures may be required for other activities as well:

- Median Opening Construction.
- Removal of trees and chips from the cleared area.
- Drainage culverts across mainline.
- Installation of temporary and permanent barrier.
- Full depth sawcut.
- Paving adjacent to active travel lane.
- Loading of trucks within four feet of a travel lane.
- Bridge Mounted, Cantilever and Overhead Sign Structure construction activities adjacent to a travel lane

Lane closures shall be removed if work requiring the lane closure is not ongoing unless included in the Contract as a long-term traffic control requirement or approved by the Resident.

The Resident is required to receive approval from the Authority for all lane closures. The request shall be submitted to the Authority by the Resident at least two (2) working days prior to the day of the requested lane closure. All requests must be received by 12:00 p.m. to be considered as received on that day. Requests received after 12:00 p.m. shall be considered as received the following day. The Contractor shall plan the work accordingly.

Lane Closure Installation and Removal Procedure

The Contractor will follow the following procedures when closing any travel lanes on the turnpike roadways:

1. The sign package shall be erected starting with the first sign and proceeding to the start of the taper. The sign crew shall erect signs with the vehicle within the outside shoulder;

2. Position the arrow board with the proper arrow at the beginning of the taper; and,

3. When arrow board is in place, continue with the drums/cones to secure the work area.

To dismantle the lane closure, start with last drums/cone placed and work in reverse order until all the drums are removed. The arrow board which was installed first shall be the final traffic control device removed, excluding the sign package. The remaining sign package shall be picked-up starting with the first sign placed and continuing in the direction of traffic and with the vehicle in the outside shoulder.

Temporary Mainline Shoulder Closures

Temporary mainline shoulder closures will only be allowed as outlined in Special Provision Section 652, Specific Project Maintenance of Traffic Requirements. Temporary shoulder closures are anticipated at locations where Contractor access to the mainline is required.

Temporary shoulder closures with plastic drums shall be removed at the end of the workday. Temporary shoulder closures with plastic drums will not be allowed during periods of inclement weather as determined by the Authority.

Work Requiring Complete Stoppages of Traffic

Complete stoppages of traffic will only be allowed as outlined in Special Provision Section 652, Specific Project Maintenance of Traffic Requirements, or as approved by the Resident.

The following is a partial list of activities requiring complete stoppages of traffic. Complete stoppages of traffic may be required for other activities as well:

- Moving of heavy or slow equipment across or on the travel lanes (stoppage less than five minutes).
- Erection or removal of overhead or cantilever sign structures and bridge mounted signs (stoppage less than 25 minutes).

State Police will be used to stop traffic. Cost for State Police will be the responsibility of the Authority. The times requested for trooper assisted equipment moves by on-duty troopers cannot be guaranteed. The MTA will not be held responsible for any delays or costs associated with the delay, postponement or cancellation of an on-duty trooper assisted equipment move.

The Erection or Removal of Structural Steel/ Space Frames/ Overhead Signs

The erection or removal of structural steel, overhead signs, and space frames will only be allowed at times outlined in Section 652, Specific Project Maintenance or Traffic Requirements. Traffic shall be stopped and may be held for periods of up to 25 minutes during these operations. Before the roadway is reopened, all materials shall be secured so they will not endanger traffic passing underneath.

The Contractor will reimburse the Authority at the rate of $2,500.00 per five-minute period for each roadway (northbound and southbound), in excess of the 25 minute limit. Total penalty shall be deducted from the next pay estimate.

Equipment Moves

The complete stoppage of traffic for an equipment move (including delivery of materials to the median) will be considered for approval if the action can not reasonably be completed with the erection of a lane closure. Contractor shall be responsible for the installation of Signs CS-3, “Expect Stopped Traffic” and Signs W3-4 “Be Prepared to Stop”, in accordance with the Single Lane Closure Detail immediately prior to the equipment move. These signs shall be covered when not applicable.

The maximum time for which traffic may be stopped and held for an equipment move at any single time shall be five minutes. The duration shall be measured as the time between the time the last car passes the Resident until the time the Resident determines that all travel lanes are clear. The traffic shall only be stopped for the minimum period of time required to complete

the approved activity. The Contractor shall reimburse the Authority at a rate of $500 per minute for each minute in excess of the five-minute allowance.

Unapproved movement of heavy equipment across the travel lanes shall be considered a violation of the Maintenance of Traffic Requirements and is subject to the fines of $500 per minute or portion thereof.

Request for Complete Stoppage of Traffic

A request for a complete stoppage of traffic must be submitted to the Resident for approval. The Resident is required to receive approval from the Authority for all stoppages. The request shall be submitted to the Authority by the Resident at least five working days prior to the day of the requested stoppage of traffic and two days for a stoppage less than five minutes. All requests must be received by 12:00 p.m. noon to be considered as received on that day. Requests received after 12:00 p.m. shall be considered as received the following day. The Contractor shall plan the work accordingly.

Short-Term or Work Hour Speed

A short-term or work hour speed (Fines Doubled) is a regulatory speed limit that indicates the maximum legal speed through a work zone which is lower than the normal posted speed. The speed limit shall be displayed by black on white speed limit signs in conjunction with a black on orange "Work Zone" plate. Speed limit signs shall be installed at each mile within the work zone. The reduced speed zone shall be at least 1,500 feet long. Any existing regulatory speed limit signs within the reduced speed zone shall be covered once the reduced speed signs have been erected.

Two orange fluorescent flags shall be attached to all speed limit signs that are uncovered for a period of time exceeding one week. This work shall be incidental. Signs that are uncovered on a regular basis are not required to have the supplemental flags.

The reduced speed limit signs shall only be used during the following circumstances unless approved by the Resident:

- Workers are adjacent to traffic
- Travel lane is closed

The signs shall be covered or removed when not applicable. The covering and uncovering of signs shall be included for payment under Maintenance of Traffic. Signs relating to reduced speed shall be installed in accordance with the details. The Contractor shall note that signs installed behind concrete barrier in the outside shoulder are required to be clearly visible to all drivers at all times.

Temporary toll plaza lane closures may be required for lanes not designated for long term closure on the Maintenance of Traffic Control Plans for Phases 1 or 2. The following minimum requirements shall be maintained:

Plaza lanes shall remain available for opening at all times except when the Contractor is performing work in or near toll lanes such that appropriate access to the lane entry or departure is constrained by Contractor activities, or adjacent to or directly over the plaza lanes. A plaza lane

closure is required when danger to the traveling public, other MTA contractors or MTA employees may exist. The potential of any material falling onto the roadway shall be considered a potential danger. This shall include, but not necessarily be limited to, demolition debris, water, tools, equipment and material.

A plaza lane closure will be required whenever workers or equipment will be present in a plaza lane or when regular vehicular access into or out of a toll lane is impeded by the Contractor. The Authority may also require adjacent lanes to be closed to protect the traveling public or Authority employees. Temporary plaza lane closures are allowed from 07:00 pm to 05:00 am. These hours may be adjusted by the Resident based on the daily traffic volumes. Plaza lane closures not completely removed by the time specified will be subject to a rental fee of $100.00 per 10 minutes for every 10 minute increment beyond the specified ending time for each lane. Temporary plaza lane closures will not be allowed during periods of inclement weather as determined by the Authority and will not be allowed on Saturday, Sundays, and Holidays. The Authority reserves the right to order removal of approved temporary plaza lane closures.

Requests for temporary traffic lane closures shall be submitted to the Resident for approval. The Resident is required to receive approval from the Maine Turnpike Authority's Plaza Supervisor for all plaza lane closures. The request shall be submitted to the Plaza Supervisor by the Resident at least one working week prior to the day of the requested plaza lane closure. All requests must be received by 12:00 p.m. noon to be considered as received on that day. Requests received after 12:00 p.m. shall be considered as received the following day. The Contractor shall plan the work accordingly.

Wide load lanes (Toll Plaza Lanes 1 and 8) may be closed when wide loads are not permitted on the Turnpike by the Authority after Phase 1. The temporary wide load lane closures must be scheduled one week in advance, and occur outside of the various Holiday restrictions.

SPECIAL PROVISION

SECTION 652

MAINTENANCE OF TRAFFIC

(Flashing Beacon - Solar Powered)

652.1 Description

The following paragraphs are added:

This special provision provides for the installation of two dual head flashing beacons at the end of each concrete barrier separating the cash lanes from the open road tolling lanes.

All provisions of Section 652, except as modified or changed below, shall apply.

1. Contractor shall furnish (12 inch) amber flashing beacons powered by solar panel with battery backup. Units shall have internal programmable timings for flash interval.
2. The beacons shall be mounted (11.5 feet) above the elevation of the adjacent edge of pavement.

652.7 Method of Measurement

The following paragraphs are added:

Flashing beacons will be measured by each unit authorized and installed on the Project. The following list of major materials applies:

- 2 – P & K signal pole model SP-114 or approved equal.
- 2 – 2 inch amber flashing beacon powered by solar panel. Units shall be JSF Technologies FL Series -24 Hour Flashing Beacon FL -2400 or an approved equal.

652.8 Basis of Payment

The following paragraphs are added:

The accepted quantity of Flashing Beacon – Solar Powered will be paid for at the Contract unit price per unit. This price shall be full compensation for all labor, materials and equipment necessary to furnish and install Flashing Beacons.

Payment will be made under:

Pay Item		Pay Unit
652.301	Flashing Beacon – Solar Powered	Each

SPECIAL PROVISION

SECTION 652

MAINTENANCE OF TRAFFIC

(Construction Signs - Supplied by Authority)

652.1 Description

The following paragraph is added:

Construction Signs to be Supplied by Authority, are currently in place as shown on the Wide Load Restriction Sign Plan. These will are available to the Contractor for use when wide load restrictions are required per phasing plans. At the completion of the contract, they shall become the property of the Authority and shall be stacked at Crosby Maintenance Area.

652.8 Basis of Payment

The following paragraph is added:

No separate payment for Construction Signs – Supplied by Authority, will be made to the Contractor. The cost for maintenance, replacement of damaged, covering and uncovering, resetting, transporting and stacking shall be incidental to 652.361 Maintenance of Traffic Control Devices.

SPECIAL PROVISION

SECTION 652

MAINTENANCE OF TRAFFIC

(Portable-Changeable Message Sign)

652.2.4 Other Devices

The eighth paragraph is deleted and replaced with the following:

Portable-Changeable Message Signs (PCMS) will be furnished by the Contractor and shall be Ver-Mac PCMS-1210 or an approved equal. PCMS's shall be located and relocated to locations approved by the Resident within the Project limits for the duration of the Project.

Features to the Ver-Mac PCMS shall include:

- An all LED display.
- Be legible from a distance of 1,000 feet.
- Have three (3) lines available for messages.
- Be NTCIP compliant (NTCIP 1203).
- Be capable of being programmed by a remote computer via a data (IP over Cell) cellular modem connection.
- Have GPS location capability, by GPS modem or by adding on a GPS device capable of providing GPS location remotely to the MTA Communications' Center.
- Be programmable by Vanguard Software by Daktronics.

The Contractor shall complete and/or provide the following:

- Submit a catalog cut shop drawing to the Resident of all proposed equipment for review and approval.
- Establish and pay for a data cellular account so that PCMS may be remotely programmed and operated from the Authority's Communications' Center.
- Provide to the Authority technical support from the PCMS manufacturer that may be necessary to integrate the PCMS into the MTA software platform (Vanguard Software by Daktronics).
- Provide the manufacturer's software necessary to change the PCMS messages remotely from the Authority's Communications' Center and the Resident's computer if necessary or requested.
- Provide training on the operation of the PCMS to the Resident and the Authority's Communications' Center representative.
- Make all PCMS on the Project work site available to the Authority for any/all emergency situations as defined by the Authority. This shall include the preemption of any messages running at the time of need as approved by the Authority and the Resident.

The Contractor shall also:

- Furnish, operate, relocate and maintain the PCMS as approved by the Resident.
- Be responsible for the day to day programming and operation of the PCMS for Project purposes.

The PCMS(s) shall be on-site, with data cellular account established, GPS location capable, and all training required complete within one month after mobilization or seven days prior to implementing traffic shifts, detours or stoppages, whichever is sooner. Implementation of traffic shifts, detours, or stoppages of traffic will not be allowed without PCMS boards on-site with the specified Authority's Communications' Center Software Platform integration and training.

652.7 Method of Measurement

The following sentence is added:

Portable-Changeable Message Sign(s) will be measured for payment by each unit furnished, installed and maintained.

652.8 Basis of Payment

The following paragraphs are added:

The accepted quantity of PCMS will be paid for at the Contract unit price each. This price shall be full compensation for furnishing, relocating, maintaining and removing the PCMS. The price also includes all costs associated with setting-up and paying for a data cellular account, technical support, training and any costs associated with the GPS location device.

Progress payment of each PCMS shall be pro-rated over the duration of the Contract. Contract duration shall be from the specified Contract start date to substantial completion or Contract completion, whichever is sooner.

For a PCMS that fails to operate when required, the Contractor will be given 24-hours to repair or replace the PCMS. For periods longer than 24-hours, payment will be reduced based on the pro-rated time that the PCMS is out of service.

Payment will be made under:

Pay Item		Pay Unit
652.41	Portable-Changeable Message Sign	Each

SPECIAL PROVISION

SECTION 652

MAINTENANCE OF TRAFFIC

(Truck Mounted Attenuator)

652.1 Description

The following sentence is added:

The Contractor shall furnish, operate and maintain a truck and truck mounted attenuator.

652.2.1 Truck Mounted Attenuator

The truck mounted attenuator system shall conform to the following requirements:

- Truck and attached attenuator shall conform to the NCHRP Report 350, Test Level 3 criteria.
- A mounted revolving amber light or amber strobe light with 360-degree visibility.
- An arrow light bar fixed to the vehicle.
- The attenuator shall be mounted to a vehicle with a minimum weight of 10,000 lbs.

652.3.7 Operations

The Contractor shall manage the operation of the truck mounted attenuator. The truck mounted attenuator should be utilized in lane closures and other construction operations where workers are exposed to traffic and not protected by positive means. The operation of the vehicle shall be in accordance with the Manual of Uniform Traffic Control Devices and the manufacturer's recommendation.

652.7 Method of Measurement

The following sentence is added:

Truck mounted attenuator shall be measured for payment by the calendar day for each calendar day that the unit is used on a travel lane or shoulder on the project.

652.8.2 Basis of Payment

The following paragraphs are added:

The Truck Mounted Attenuator(s) will be paid for at the Contract unit price per calendar day. This price shall include all costs associated with the use of the vehicle. Payment shall include operator, fuel, truck, maintenance, flashing lights, arrow board and all other incidentals necessary to operate the vehicle.

The unit price noted in the proposal sheet is fixed by the Maine Turnpike Authority and may not be altered. Altering of the unit price will be a non-curable bid defect.

Payment will be made under:

Pay Item		Pay Unit
652.45	Truck Mounted Attenuator	Calendar Day

SPECIAL PROVISION

SECTION 655

ELECTRICAL WORK

655.01 Description

All work shall be governed by the Standard Specifications except for that work which applies to those sections of the Standard Specifications which are amended by the following modifications, additions and deletions.

Specifically, for the electrical work (in addition to standards specified in individual work sections), the following standards are imposed, as applicable to the work in each instance:

- NEC, National Electrical Code (NFPA No. 70)
- NFPA No. 101, Life Safety Code
- ANSI C 2, National Electrical Safety Code
- ANSI C 73, Dimensions of Attachment Plugs and Receptacles
- NECA standards for installation
- NEMA standards for materials and products
- UL, Underwriters Laboratories

The Contractor will warranty the material supplied by them and their workmanship for a minimum of one (1) year.

655.02 General Provisions

RELATED DOCUMENTS

General provisions of this Contract, including General Provisions and Special Provisions, apply to work of this section.

SUMMARY

This Section specifies several categories of provisions for electrical work, including:

1. Certain adaptive expansions of requirements specified in the Special Provisions.
2. General performance requirements within the electrical systems as a whole.
3. General work to be performed as electrical work, because of its close association.

SUMMARY OF ELECTRICAL WORK

General Outline: The facilities and systems of the electrical work can be described (but not by way of limitation) as follows:

1. Installation of electrical control and power distribution systems, including the electrical connections to new equipment.

2. Installation of toll revenue collection systems hardware.

3. Installation of temporary and interim provisions.

Permits and Fees: This work shall include the procurement of and payment for any and all permits and fees required for the performance of the electrical work including those that may be required from local utilities for services.

COORDINATION OF ELECTRICAL WORK

Refer to Part II, Special Provisions for general coordination requirements applicable to the entire work. It is recognized that the Contract documents are often diagrammatic in showing certain physical relationships, which shall be established within the electrical work, and in its interface with other work including utilities and mechanical work, and that such establishment is the exclusive responsibility of the Contractor.

Arrange electrical work in a neat, well organized manner with conduit and similar services running parallel with primary lines of the building construction, and with a minimum of 7'0" overhead clearance where physical limitations permit.

Locate operating and control equipment properly and in accordance with the NEC, to provide easy access, and arrange entire electrical work with adequate access for operation and maintenance.

Coordination of Options and Substitutions: Where the Contract documents permit the selection from several product options, and where it becomes necessary to authorize a substitution, the Contractor shall not proceed with purchases until coordination of all interface requirements has been checked and satisfactorily established. Substitutions are subject to approval by the Authority or designated representative per the requirements of the Contract documents.

SUBMITTALS FOR ELECTRICAL WORK

For electrical work, submittals are required for each category of items listed below.

- Shop Drawings, Product Data, Certifications, Test Reports, Warranties, Guarantees, Installation Drawings, and Work Checklist in Appendix E.
- Installation Drawings shall be modified and submitted to reflect any changes during installation of electrical equipment.

The Contractor, prior to forwarding shop drawings and product data to the Resident, shall check all conditions, make all corrections and sign and date each set. No shop drawings will be

reviewed by the Resident without the signature of the Contractor, which shall signify that he has checked the submittals.

PRODUCTS, ELECTRICAL WORK

Refer to Divisions 600 and 700 of the Standard Specifications for general requirements on products, materials and equipment. The following provisions expand or modify the requirements as applicable to electrical work:

Compatibility: Provide products, which are compatible with other products of the electrical work and with other work requiring interface with the electrical work, including electrical connections and control devices. For exposed electrical work, coordinate colors and finishes with other work.

FLOOR AND WALL PENETRATIONS

Where electrical materials penetrate walls or floors that are a part of a fire separation or assembly, the opening shall be effectively sealed to maintain separation integrity. Openings shall be closed using General Electric RTV850 Silicone RTV Foam, or approved equal to form a fire rated, water-tight seal, and installation with automatic mixing only. The penetration seal materials shall pass ASTM E 814 (UL 1479) Standard Method of Fire Tests for Through Penetration Fire Stops up to the required fire resistance.

Where conduits penetrate a wall, floor or ceiling that is part of a weatherproof barrier, a non shrink weatherproof type grout and or Sika 1A caulking shall be used, in accordance with manufacturer's installation instructions.

All work, materials, labor to fireproof or waterproof conduit penetrations shall be incidental to the various pay items

EXCAVATING FOR ELECTRICAL WORK

The work of this article is defined to include whatever excavating and back-filling is necessary to install the electrical work. Coordinate the work with other excavating and back-filling in the same area, including de-watering; flood protection provisions, and other temporary facilities. Coordinate the work with other work in the same area, including other underground services (existing and new), paving, and concrete work. Coordinate with weather conditions and provide temporary facilities needed for protection and proper performance of installations, excavating and back-filling.

General Standards: Except as otherwise required, comply with the applicable provisions of Divisions 600 and 700 of the Standard Specifications for information related to electrical-work excavating and back-filling. Refer instances of uncertain applicability to the Resident for resolution before proceeding.

ELECTRICAL WORK CLOSEOUT

Construction Equipment: After completion of performance testing and the Authority's performance testing, remove Contractor's tools, test facilities, construction equipment and similar devices and materials used in execution of the work but not incorporated in the work.

ELECTRICAL SYSTEM TEST

The Contractor shall submit certification of the adequacy of each power and/or communications circuit for the following sub-systems, where applicable:

- ORT Lane Controller Cabinets
- Lane Controller (LC) System
- Automatic Vehicle Identification (AVI) Readers
- Automatic Vehicle Identification (AVI) Antennas
- Digital Video Audit System (DVAS)
- Traffic Control Pedestal (TCP)
- Vehicle Capture and Recognition System (VCARS)
- Canopy Override Switch (COS)
- Manual Lane Terminal (MLT)
- Receipt Printer (RP)

Verification of the electrical system should be done by turning on/off assigned circuit breakers prior to attachment of equipment to validate panel schedule and that proper voltage is present at termination.

COMMUNICATIONS SYSTEMS

Provide outlets, wireways, device plates, etc., in conformance with the applicable sections of this specification, as may be required.

Wireways shall be in accordance with "Wireways" part of the Technical Specifications and NEC and the following special conditions:

- Minimum size shall be 1 inch unless otherwise noted.

- No more than two standard factory 90-degree bends per 100 feet or three 90 degree 24 inch radius bends and as to adhere to minimum manufacturers bend radius's on data cables.

655.03 Electrical Wireways

RELATED DOCUMENTS

General provisions of the Contract, including General Provisions and Special provisions, apply to work of this section.

SUMMARY

The requirements of this section apply to electrical wireway work specified elsewhere in these Specifications.

The types of electrical wireways required for the project may include the following:

- Electrical metallic tubing.
- Intermediate metal conduit.
- Liquid tight metallic flexible conduit.
- Galvanized rigid metal conduit.
- Nonmetallic conduit. (PVC)
- Surface metal wireways.

QUALITY ASSURANCE

Manufacturers: Firms regularly engaged in manufacture of electrical wireways of types and capacities required, whose products have been in satisfactory use in similar service for not less than three years.

Contractor: A firm with at least three years of successful installation experience on projects with electrical wiring installation work similar to that required for the project. Under this definition, Contractor can also be a subcontractor to the General Contractor for the Project.

NEMA Compliance: Comply with applicable portions of National Electrical Manufacturers Association standards pertaining to nonmetallic duct and fittings for underground installation.

UL Labels: Provide electrical wireways, which have been listed and labeled by Underwriters Laboratories.

NEC Compliance: Comply with National Electrical Code (NFPA No. 70) as applicable to construction and installation of electrical wireways.

PRODUCT DELIVERY, STORAGE AND HANDLING

Provide color-coded end-cap thread protectors on exposed threads of threaded metal conduit. Handle conduit and tubing carefully to prevent bending and end-damage and to avoid scoring finish. Store pipe and tubing inside and protect from weather. When necessary to store outdoors, elevate well above grade and enclose with durable, watertight wrapping.

MATERIALS AND COMPONENTS

For each electrical wireway system required, provide a complete assembly of conduit or tubing with fittings including, but not necessarily limited to, connectors, nipples, couplings, elbows, expansion fittings, supports, and other components and accessories as needed to form a complete system of type required.

Metal Conduit, Tubing and Fittings: Provide metal conduit, tubing and fittings of type, grade, size and weight (wall thickness) required for each service. Where type and grade are not indicated, provide proper selection determined to fulfill wiring requirements, and comply with National Electrical Code for electrical wireways.

Rigid Steel Conduit: FS WW-C-581 and ANSI C80.1.

Intermediate Steel Conduit: FS WW-C-581 and ANSI C80.1.

EMT- Electrical Metallic Tubing: FS WW-C-563A, ANSI C80.3 and UL 797. Installation shall comply with NEC Article 348. Provide high quality, hot dip galvanized, electrical metallic tubing conduit and fittings of type, size and weight (wall thickness) required for each application. EMT shall only be used in enclosed areas that are not subject to possible collision or interference. Where type and grade are not indicated, provide proper selection determined to fulfill wiring requirements, and comply with National Electrical Code. Rain-tight compression type connectors shall be used in all cases. Set-screw type conduit connections or fittings shall not be used.

Galvanized Rigid Metal Conduit Fittings: FS W-F-408, Type and Classes as required.

Liquid-tight Flexible Metal Conduit: Provide liquid-tight flexible metal conduit comprised of single strip, continuous, flexible interlocked, double-wrapped steel, galvanized inside and outside; forming smooth internal wiring channel; with liquid-tight jacket of flexible polyvinyl chloride (PVC).

Liquid-tight Flexible Metal Conduit Fittings: FS W-F-406, Type as required.

Nonmetallic Conduit and Fittings (PVC): Provide nonmetallic conduit and fittings of type, size and weight (wall thickness) required for each service. Where type and grade are not indicated, provide proper selection determined to fulfill wiring requirements, and comply with National Electrical Code for electrical wireways, and with type selected in accordance with applicable standards.

Surface Mounted Metallic Wireways: Provide wireways for surface mounting as required. Wireways shall be of rectangular cross section of size as required by the National Electrical Code (NFPA No. 70) for conductor fill. Wireways shall be of a design to accommodate wiring devices required. Finish shall be galvanized.

Conduit and Tubing and Wireway Accessories: Provide conduit, tubing and wireway accessories including straps, hangers, angles expansion and deflection fittings as recommended by conduit, tubing and wireway manufacturers.

Mounting strut materials and hardware: Provide corrosion-resistant hot-dip galvanized strut members and stainless steel hardware for all equipment and cabinet mounting applications.

INSTALLATION

Install conduit and tubing products as required, in accordance with manufacturer's written instructions, applicable requirements of NEC and National Electrical Contractors Association's

"Standard of Installation", and in accordance with recognized industry practices to ensure that products serve intended function.

Complete the installation of electrical wireways before starting installation of cables within wireways.

Where conduit is installed in earth, it shall be Polyvinyl Chloride (PVC) conduit as specified in the Plans.

PVC conduit shall be used in concrete slabs on grade and where noted in the Plans. Metallic conduit is not permitted in the concrete slabs or in substitution of any PVC conduit locations specified on the Plans without specific authorization by the Authority.

Wherever possible, install horizontal wireway runs above water and steam piping.

Install surface metal wireways and accessories as required on elevations. Carefully coordinate with interior finishes and furnishings.

At any point where a conduit crosses an expansion joint, or where movement between adjacent sections of conduit can be expected, bronze or alloy expansion fittings shall be installed equal to Type AX as made by the O.Z. Electrical Manufacturing Co., Inc., or equivalent by Hope or Spring City unless such locations are within conduit specified as non-metallic. Such locations shall be handled with a non-metallic equivalent or as specified in Plans.

The Contractor shall submit a proposed method of attaching all ancillary components to the space frame to the Resident for approval. The proposed attachment method shall not require drilling, welding or other attachment methods that will damage the space frame or its galvanized coating. Any areas of galvanized coating that are damaged by the Contractor during installation of ancillary components shall be repaired in accordance with ASTM A780.

655.04 Wires and Connectors

RELATED DOCUMENTS

The general provisions of the Contract, including General Provisions and Special Provisions, apply to the work specified in this section.

SUMMARY

The requirements of this section apply to the wire work specified elsewhere in these Specifications.

The applications for wire and connectors required on the project may include the following:

- Power distribution circuitry.
- Lighting circuitry.
- Appliance and equipment circuitry.

QUALITY ASSURANCE

Manufacturers: Firms regularly engaged in the manufacture of electrical products of the types and ratings required, whose products have been in satisfactory use in similar service for not less than 3 years.

Contractor: A firm with at least three years of successful installation experience on projects with electrical wiring installation work similar to that required for the project. Under this definition, Contractor can also be a subcontractor to the General Contractor for the Project.

NEC Compliance: Comply with National Electrical Code (NFPA 70) as applicable to construction and installation of electrical cable, wire and connectors.

UL Labels: Provide electrical cable, wire and connectors, which have been listed and labeled by Underwriters Laboratories.

NEMA/ICEA Compliance: Comply with National Electrical Manufacturers Association/Insulated Power Cable Authorities Association Standards publications pertaining to materials, construction and testing wire cable, where applicable.

PRODUCT DELIVERY, STORAGE AND HANDLING

Provide factory-wrapped water-proof flexible barrier material for covering wire and cable on wood reels, where applicable; and weather resistant fiberboard containers for factory-packaging of cable, wire and connectors, to protect against physical damage in transit. Do not install damaged cable, wire or connectors; remove from project site.

Store wire and connectors in factory-installed coverings in a clean, dry indoor space which provides protection against the weather.

MANUFACTURERS

Provide products produced by one of the following or approved equal (for each type of cable, wire and connectors):

Cable and Wire:

- Anaconda Wire and Cable Co.
- Belden Corp.
- General Cable Corp.
- Phelps Dodge Cable and Wire Co.
- Wire and Cable Dept., General Electric Co.
- Rome Cable Corp.

Connectors:

- AMP Inc.
- Burndy Corp.
- Minnesota Mining and Mfg. Co.

- OZ/Gedney Co.
- Thomas & Betts Co.

WIRE AND CONNECTORS

Except as otherwise required, provide wire and connectors of manufacturer's standard materials, as required by published product information; designed and constructed as recommended by the manufacturer, and as required for the installation.

Wire:

Provide factory-fabricated wire of the size, rating, material and type as required for each service. Where not indicated, provide proper selection as determined by Installer to comply with installation requirements and with NEC standards. Select from only the following types, materials, conductor configurations, insulations, and coverings for 120/240 Volt circuits:

UL Type: THW. (Sizes #6 AWG wire and larger)

UL Type: THHW. (Sizes up to #4 AWG wire)

UL Type: USE. (Underground installation)

Material: Copper.

Conductors: (AWG wire 20 to AWG wire 16).

> Note: All low voltage signal conductors (including CAT5e and CAT6 data cables) shall be stranded. Conductors for underground, below grade, or in conduit to lane devices shall be OSP grade, gel filled. Interior building communications cables may be plenum rated for interior wall or cable tray applications.

Concentric-lay-stranded (standard flexibility) (AWG wire 14 and larger).

Interconnection for data communication shall be performed with cables that shall be submitted for approval. The general cable types are designated on the Plans/ Specifications. Minimum bend radius should meet the requirements of the manufacturer and the requirements of the system.

Wire shall be color-coded as noted in the wiring schedules provided in the Plans.

Lead-in cables to extend loop detectors shall be IMSA Type 50-2. Loop lead-in cables shall be manufactured with a size of #16 AWG.

Klik-Its (Power & Tel Enterprise Part #C8820) or approved equivalent shall be used at all loopwire splice locations. All splices must be twisted, soldered and shrink-wrap waterproofed before enclosure is placed.

Home run cables preferably should not be shielded. The use of shielded cable is acceptable provided neither end is grounded.

All cable labeling shall be coordinated with the requirements of the Authority's Toll System Integrator (SI).

INSTALLATION

Install electrical wire and connectors as required, in accordance with the manufacturer's written instructions, the applicable requirements of NEC and the National Electrical Contractors Association's "Standard of Installation", and in accordance with recognized industry practices to ensure that products serve the intended functions.

Coordinate cable and wire installation work with electrical wireway and equipment installation work, as necessary for proper interface.

All wire and cable shall be in first class condition when they are installed. Lo-leak lubricants manufactured for the purpose of a pulling lubricant may be used when necessary.

All wires shall be continuous from outlet and there shall be no unnecessary slack in the conductors.

FIELD QUALITY CONTROL

Prior to energizing, check wire for continuity of circuitry and for short circuits with ohmmeter type testing equipment. Correct malfunction when detected.

Subsequent to wire hook-ups, energize circuitry and demonstrate functioning in accordance with requirements.

655.05 Electrical Boxes and Fittings

RELATED DOCUMENTS

The general provisions of the Contract, including General Provisions and Special Provisions, apply to the work specified in this section.

SUMMARY

The types of electrical boxes and fittings required for the project may include the following:

- NEMA 4X Cabinet for ORT AVI Readers
- Outlet boxes
- Junction boxes
- Pull boxes
- Floor boxes
- Conduit bodies
- Bushings
- Locknuts

QUALITY ASSURANCE

Manufacturers: Firms regularly engaged in the manufacture of electrical units of types and sizes required, whose products have been in satisfactory use in similar service for not less than three years.

Contractor: A firm with at least three years of successful installation experience on projects with electrical installation work similar to that required for the project. Under this definition, Contractor can also be a subcontractor to the General Contractor for the Project.

NEC Compliance: Comply with National Electrical Code (NFPA 70) as applicable to construction and installation of electrical boxes and fittings.

U.L. Labels: Provide boxes and fittings, which have been listed and labeled by Underwriters Laboratories.

NEMA Compliance: Comply with National Electrical Manufacturers Association standards as applicable to nonmetallic fittings for underground installation.

NECA Standard: Comply with applicable portions of the National Electrical Contractors Association's "Standard of Installation".

MANUFACTURERS

Provide products produced by one of the following or approved equal (for each type of box and fitting):

ORT Control Cabinet:

- Hammond Manufacturing (provided by SI and installed by the Contractor)

Interior Outlet Boxes:

- Appleton Electric Co.
- Arrow Conduit and Fittings Corp.
- National Electric Products Co.
- OZ/Gedney Co.
- Steel City, Midland-Ross Corp.

Junction and Pull Boxes:

- Arrow-Hart, Inc.
- General Electric Co.
- OZ/Gedney Co.
- Square D Co.
- Unitil

Conduit Bodies:

- Appleton Electric Co.
- Crouse-Hinds Co.
- Killark Electric Mfg. Co.
- Pyle-National Co.

Bushings, Knockout Closures and Locknuts:

- Allen-Stevens Conduit Fittings Corp.
- Allied Metal Stamping, Inc.
- Appleton Electric Co.
- Carr Co.
- Raco, Inc.
- Steel City, Midland-Ross Corp.
- Thomas and Betts Co., Inc.

MATERIALS

ORT Control cabinet: shall be provided by the Authority's Toll System Integrator (SI) and installed by the Contractor. The following information is provided to assist the Contractor with planning for the associated conduit and wiring work. The ORT Control Cabinet shall have dimensions of:

Height 6'-0"
Width 6'-0"
Depth 1'-6"

FABRICATED MATERIALS

Interior Outlet Boxes: Provide galvanized steel interior outlet wiring boxes, of the type, shape and size, including depth of box, to suit each respective location and installation; constructed with stamped knockouts in back and sides, and with threaded holes with screws for securing box covers or wiring devices.

Interior Outlet Box Accessories: Provide outlet box accessories as required for each installation, including mounting brackets, wallboard hangers, extension rings, fixture studs, cable clamps and metal straps for supporting outlet boxes, compatible with outlet boxes being used and meeting requirements of individual wiring situations. Choice of accessories is Installer's option. All covers for outlet boxes to be stainless steel.

Junction and Pull Boxes: Provide galvanized sheet steel or concrete junction and pull boxes as called for in the Plans with screw-on covers; of the type shape and size, to suit each respective location and installation; with welded seams and equipped with stainless steel nuts, bolts, screws and washers.

Conduit Bodies: Provide galvanized cast-metal conduit bodies, of the type, shape and size, to suit each respective location and installation, constructed with threaded conduit ends, removable cover, and corrosion-resistant screws.

Bushings, Knockout Closures and Locknuts: Provide corrosion-resistant punched-steel box knockout closures, conduit locknuts and malleable iron conduit bushings of the type and size to suit each respective use and installation.

Mounting strut materials and hardware: Provide corrosion-resistant hot dipped galvanized members and stainless steel hardware for all equipment mounting applications. Where strut

material is exposed to the weather, and less than 10 feet off the ground, struts shall be stainless steel. When any galvanized strut member or hardware is cut or the galvanizing is compromised, the affected area shall be wire brushed and cleaned to bare metal and the area shall be given two coats of cold galvanizing (following application instructions).

INSTALLATION OF BOXES AND FITTINGS

Install all equipment cabinets in compliance with NEC requirements, in accordance with the manufacturer's written instructions and with recognized industry practices to ensure the boxes and fittings serve the intended purposes. Contractor shall coordinate all associated conduit, wiring and related work with the Resident and SI to confirm appropriate placement in coordination with ORT Control cabinet installation. Given the final installation of the ORT Control cabinets will likely take place several weeks following the placement of the cabinets in the plaza tunnel, the Contractor shall work with the Resident to provide adequate protection of the cabinets until they are mounted in their final location.

Install electrical boxes and fittings in compliance with NEC requirements, in accordance with the manufacturer's written instructions and with recognized industry practices to ensure that the boxes and fittings serve the intended purposes:

Provide weatherproof outlets for interior and exterior locations exposed to weather or moisture.

Provide knockout closures to cap unused knockout holes where blanks have been removed.

Locate boxes and conduit bodies to ensure accessibility of electrical wiring.

All boxes shall be rigidly secured in position unless otherwise directed

Where standard boxes are not suitable, provide boxes of special design to suit space and function.

The Contractor shall submit a proposed method of attaching all ancillary components to the space frame to the Resident for approval. The proposed attachment method shall not require drilling, welding or other attachment methods that will damage the space frame or its galvanized coating. Any areas of galvanized coating that are damaged by the Contractor during installation of ancillary components shall be repaired in accordance with ASTM A780.

655.06 Wiring Devices

RELATED DOCUMENTS

The general provisions of the Contract, including General Provisions and Special Provisions, apply to the work specified in this section.

SUMMARY

Wiring devices are defined as single discrete units of electrical distribution systems, which are intended to carry but not utilize electric energy.

The types of electrical wiring devices required for this project include the following:

- Receptacles
- Switches
- Wall plates
- Plugs
- Connectors
- Breakers

QUALITY ASSURANCE

Manufacturers: Firms regularly engaged in manufacture of wiring devices, of types and ratings required, whose products have been in satisfactory use in similar service for not less than three years.

Contractor: A firm with at least three years of successful installation experience on projects with electrical installation work similar to that required for the project.

NEC Compliance: Comply with National Electrical Code (NFPA No. 70) as applicable to construction and installation of electrical wiring devices.

UL Labels: Provide electrical wiring devices, which have been tested, listed and labeled by Underwriters Laboratories.

NEMA Compliance: Comply with National Electrical Manufacturers Association standards for general- and specific-purpose wiring devices.

MANUFACTURERS

Provide products produced by one of the following:

- Arrow-Hart, Inc.
- Bell Electric Co.
- Bryant Electric Co.
- Crouse-Hinds Co.
- Cutler-Hammer, Inc.
- General Electric Co.
- Gould, Inc.
- Harvey Hubbell Inc.
- Pass and Seymour, Inc.
- Slater Electric, Inc.
- Square D Co.
- Hunt Electronics
- Lutron
- Intermatic
- Paragon
- Unitil

FABRICATED DEVICES

Provide factory-fabricated wiring devices, in type and electrical rating for the service required.

Receptacles: Comply with NEMA Stds. Pub. No. WD1 and as follows:

General-Duty Duplex: Provide duplex general-duty type, spec. grade, receptacles, 2-pole, 3-wire grounding, with green hexagonal equipment ground screw, ground terminals and poles internally connected to mounting yoke, 15-ampere, 125-volts, with metal plaster ears, screw terminal connectors, NEMA configuration 5-15R unless otherwise required.

Heavy-Duty Duplex: Provide duplex type, spec. grade, receptacles, 2-pole, 3-wire grounding, with green hexagonal equipment ground screw, 30-ampere, 125-volts, with metal plaster ears, screw terminal connectors, NEMA configuration L5-30R unless otherwise required.

Switches: Comply with NEMA Stds. Pub. No. WD1 and as follows:

Provide general-duty flush toggle switches, 20-ampere, 120/277 VAC, with mounting yoke insulated from mechanism, equipped with plaster ears, and side-wired screw terminals as follows:

Single pole switches	Double pole switches
Three Way switches	Four Way switches

Breakers: Breakers shall be compatible with existing panel circuits. All breakers necessary will be incidental to the Contract pay items.

WIRING DEVICE ACCESSORIES

Wall Plates: Provide single switch and duplex outlet wall plates for wiring devices, with ganging and cutouts as required, provide with metal screws for securing plates to devices, screw heads colored to match finish of plate, and wall plates possessing the following additional construction features:

Material and Finish: 0.04 inch thick, satin finished stainless steel.

INSTALLATION OF WIRING DEVICES

Install wiring devices where required, in accordance with manufacturer's written instructions, applicable requirements of NEC and National Electrical Contractors Association's "Standard of Installation", and in accordance with recognized industry practices to ensure that products serve intended function.

Delay installation of devices until wiring is completed.

Install receptacles and switches only in electrical boxes that are clean and free from excess building materials, debris, etc.

PROTECTION OF WALL PLATES AND RECEPTACLES

Upon installation of wall plates and receptacles, Contractor shall use caution regarding the use of convenience outlets. At time of completion, replace those items which have been damaged, including those burned and scored by faulty plugs.

TESTING

Test wiring devices to ensure electrical continuity of grounding connections, and after energizing circuitry, to demonstrate compliance with requirements.

655.07 Grounding

SUMMARY

Furnish labor and material to provide grounding facilities for the entire electrical installation as required by all inspecting and jurisdictional authorities as herein specified. The following are included, but not limited to, as items requiring grounding:

- Electrical service neutral conductor.
- Neutral conductor of all transformer secondaries.
- Conduits, boxes and other conductor enclosures. Neutral or identified conductor of interior wiring system.
- Distribution panels, power and lighting panel boards.
- Non-current - carrying parts of fixed equipment, such as transformers, motors, starters, control cabinets, disconnects, lighting fixtures, stand-by generator, etc.
- Metallic cabinets and auxiliary systems cabinets.

EQUIPMENT

Furnish and install all boxes and/or access plates required for installation and inspection of grounding connections to cold water piping system or other made electrodes.

Provide brass identifying tags on all ground clamps.

INSTALLATION

Ground connections made to metallic cold water piping system at such locations as will be readily available for inspection. Provide jumper connections around all meters and shut off devices.

Where cold water piping is not available for ground connections, use other available or made electrodes as described in NEC Sections 250-81 or 250-83.

Conduit Grounding: All grounding bushings within all enclosures, including equipment enclosures, shall be wired together and connected internally to the enclosure grounding lug or grounding bus with bare copper conductor. Grounding conductors sized in accordance with NEC shall be used with all grounding bushings.

Equipment Grounding: All electrical equipment shall be grounded. Most other equipment will be furnished with grounding pads or grounding lugs. All ground connections shall be cleaned immediately prior to connection. The Contractor shall provide all grounding material required but not furnished with the equipment.

No grounding conductor shall be smaller than 12 AWG wire unless it is a part of an acceptable cable assembly.

655.08 Scope of Work/Item Description/Measurement and Payment

INSTALLATION OF ORT CONTROL CABINET

RELATED DOCUMENTS

Examine Drawings, Contract Conditions and all other Sections of the Specifications for requirements which affect work of this Section whether or not such work is specifically mentioned in this Section.

Coordinate work with that of all other trades affecting, or affected by work of this Section. Cooperate with such trades to assure the steady progress of all Project work.

DESCRIPTION

The purpose of this section is to provide information related to the work required to prepare the location of the lane controller cabinets as well as mount and install the ORT control cabinets. A concrete pad shall be installed as designed in the Plan drawings. Mounting cleats which are supplied by the SI shall be attached to the tunnel wall. Conduit, wires and cables shall be pulled to the ORT Control and looped. Once the ORT Control is placed and connections to the cabinet have been made the SI will terminate all wiring. The Contractor may be required to be present when the SI terminates to perform any additional work necessary. All work shall be coordinated with the Resident and SI.

INSTALLATION

The Contractor shall install and connect all conduit, wireway, power and data wires associated with the proposed ORT Control Cabinets. The SI shall terminate all toll equipment wiring in the ORT Control Cabinets. The Contractor shall install a concrete pad as detailed in the Plan drawings for each of the ORT Control cabinets to be mounted on.

The Contractor will be required to:

a. Install concrete pads as detailed in the Plan drawings, including reinforcement.

b. Install SI provided mounting cleats to tunnel wall and cabinets in accordance with manufacturer and SI standards.

c. Terminate clean power into three quadplex receptacles or provide alternate termination as shown on the Plans or directed by the Resident and SI. Power termination requirements to be confirmed in the field. The quadplex receptacles shall be white with stainless steel cover.

d. Pull data/power from lane equipment into the ORT Control Cabinets with a 36 inch service loop for all data lines (including 120 volt data);

e. Label each wire coming into the ORT Control Cabinets with numbered tags per wiring schedules and subject to approval as directed by the Resident and SI at the start of the project. Tags shall be neat, legible, waterproof, and approved by the SI/ the Resident.

f. Cap or otherwise prep the ends of all conduit and wiring associated with the proposed lane controller such that these components will be sealed from any environmental impacts prior to installation of the ORT Control Cabinet.

Basis of Payment

Measurement and payment for mounting and installation work associated with the ORT Control cabinets as shown on the Plan drawings and described herein will be per each item. Installation of receptacles and completion of all conduits and wiring associated with the cabinet shall be incidental.

Pulling power wires and data cables as required for the new ORT Control Cabinet and associated equipment as shown on the Plan drawings will be incidental. All new conduit, wireway, wires and data cables installed will be paid under its appropriate pay item.

Payment will be made under:

Pay Item		Pay Unit
655.01	Installation of ORT Lane Controller Cabinet	Each

INSTALLATION OF CASH LANE CONTROLLER CABINET

RELATED DOCUMENTS

A. Examine Drawings, Contract Conditions all other Sections of the Specifications for requirements which affect work of this Section whether or not such work is specifically mentioned in this Section.

B. Coordinate work with that of all other trades affecting, or affected by work of this Section. Cooperate with such trades to assure the steady progress of all Project work.

DESCRIPTION

The purpose of this section is to provide information related to the work required to prepare the location for the proposed lane controller (LC) cabinet to be installed by the Contractor. This section provides information on how the work by the Contractor will take the LC into consideration. All work shall be coordinated with the Resident and SI. This task includes removing the existing Lane Controller (LC) and the associated conduit and/or wireway, so as to install the

conduits and wiring associated with the LC. If deemed appropriate by the Resident and SI, the existing LC quadplex can be reused. Note the SI may request the quadplex be removed to allow direct clean power connection to breakers within the proposed LC installed by the SI.

Submittals

Five days prior to the removal of the LC cabinet, the Contractor will be required to submit three copies of a neat line sketch of the proposed lane controller cabinet location detailing existing and proposed conduit/wireway runs (calling out conduit/wireway sizes and the specific cables/wires in each conduit/wireway) to the LC, AVI, Sensor loops, TCP, DVAS, MLT, RP, Proximity Reader and COS (As shown in the Plans). Included with this sketch will be the Plaza Work checklist from Appendix E that the Contractor must complete, indicating what cables will be routed into the new LC, how much slack is present in each of these existing cables, whether or not existing cables will have to be removed and re-installed (with longer run) in order to reach the new LC, and any extra work that is required. The Resident/SI will have three working days to review the submittal. Work done for this submittal will be incidental to mobilization. After this submittal the exact location of the LC installation will be confirmed by the Resident and the SI. Also to be confirmed by the Resident and the SI will be the number, size and location of the conduits entering the LC cabinet, conduit/wireway layouts in pit and entering the pit, canopy and booth, islands, under slabs, etc.

Installation

The Contractor shall install all conduit/wireway and power, and data wires, associated with the proposed LC within the LC cabinet so as to be able to connect existing and proposed peripherals to the new LC at the time of installation by the SI.

The Contractor will be required to:

g. terminate clean and dirty power into the LC cabinet or provide alternate termination as directed by the Resident and the SI. Power termination requirements to be confirmed in the field;
h. pull data/power from lane equipment into the LC cabinet with a 36 inch service loop for all data lines (including 120 volt data);
i. label each wire coming into the LC cabinet with numbered tags as directed by the Resident and the SI at the start of the project. Tags shall be neat, legible, waterproof, and approved by the SI/ Resident.

Note: Existing power wires to proposed lane controller to be spliced if necessary following NEC regulations. If any other existing cable will not reach the proposed LC, a new “Home Run” from the existing equipment to the LC will need to be pulled.

Prior to the start of work on the existing toll equipment or power and comms associated with the toll equipment, the Contractor shall coordinate with the Authority and the SI for proper shut down of toll equipment. The SI will shut down the lane equipment prior to work, including LC and AVI systems. The Contractor shall not commence with work associated with toll system components without the Authority’s authorization after proper shutdown of equipment by the SI. Upon authorization, the Contractor will disconnect all power connections to the existing LC and peripheral equipment as specified in the Plans. The SI will then disconnect all communication

cables to the existing LC and peripheral equipment as specified in the Plans. The Contractor shall coordinate activities with the SI. The SI shall remove equipment within the existing LC cabinet prior to Contractor removal of the existing LC Cabinet. The Contractor will then pull all power and communication cables out, remove existing LC cabinet, and remove existing conduit as necessary install new conduit as necessary to the proposed LC location, and pull all existing cables to the proposed LC location including the existing AVI communications line (if existing length is adequate, otherwise replace per these Specifications). The Contractor will terminate clean and dirty power into the LC cabinet. The SI will install all electronics in the cabinet and terminate all communications cables to the electronics for testing. After the Contractor completes all conduit and power connections, and pulls all existing and proposed communication cables to the new LC cabinet and associated equipment as specified in the Plans, the Contractor is finished with the installation.

Measurement and payment for preparation work associated with the LC cabinet as shown on the Plan drawings and described herein will be per each item. Removal of the existing LC cabinet, installation of receptacles (if applicable), completion of all conduits and wiring associated with the cabinet shall be incidental.

Pulling of wires out of the existing LC, VES and COS cabinets, and re-pulling power wires and data cables as required for the new LC and associated equipment as shown on the Plans will also be incidental. Any wire / cable that has to be pulled completely back to the existing lane equipment and replaced (due to shortness of slack in existing cable) will be considered Contract work, and will be paid under appropriate pay items. All new conduit/wireway installed will be paid under its appropriate pay item.

Payment will be made under:

Pay Item		Pay Unit
655.012	Installation of Cash Lane Controller Cabinet	Each

DVAS MOUNT INSTALLATION

The Contractor shall mount a Pelco EM2200 hook to the underside of the space frame to accept a Costar CHG3000S enclosure for the DVAS camera. The Pelco hook shall be supplied by the SI. The Contractor will be responsible for mounting the hook. The mounting hardware shall be mounted directly to the space frame. Final location shall be approved by the Authority. Any additional hardware required will be incidental to the pay item.

Basis of Payment

Measurement and payment for work the DVAS mount installation as shown on the Plan drawings and described herein will be per each item.

Payment will be made under:

Pay Item		Pay Unit
655.02	DVAS Mount Installation	Each

VCARS MOUNT INSTALLATION

The Contractor shall mount a three inch outside diameter round schedule 40 steel pipe using the long-tangent U-bolts supplied by the SI in the VCARS mounting kit. The Contractor must leave three feet of clearance between the bottom of the space frame and the top of the mounting pipe for the VCARS unit.

Basis of Payment

Measurement and payment for work the VCARS mount installation as shown on the Plan drawings and described herein will be per each item. All materials not provided in the mounting kit, labor and hardware are incidental to the pay item.

Payment will be made under:

Pay Item		Pay Unit
655.03	VCARS Mount Installation	Each

INSTALLATION OF SENSOR LOOPS

The Contractor shall sawcut concrete pavement slab as directed by the Resident and according to Plans and detailed manufacturer's instructions provided prior to installation. Given the proprietary nature of the loop installation requirements, the manufacturer's instructions will only be provided to the awarded Contractor. Loop installation will involve multiple sawcuts within the limits indicated on the Plans and per manufacturer provided templates. Templates for loop cutting outlines shall be provided by the SI. No loop installation activities shall be done without the SI representative on-site. The SI will also provide the required materials for sealing the loops including but not limited to the required Loctite epoxy, pump and related injection equipment prior to the Contractor placing sensor loops. The Contractor shall be responsible for obtaining and operation of required sawcutting equipment.

NOTE: All dust must be contained so that no silica reaches Authority employees or patrons. This may be accomplished by using wet saws, advanced air filter systems or by building an enclosure around the work area. The Contractor shall provide the Resident a 5-day notice prior to any sawcutting activities.

Basis of Payment

Payment to be made as lump sum for all associated Sensor loops shown on Plan drawings. Sawcutting of pavement, installation of epoxy and loops will be incidental to item.

Payment will be made under:

Pay Item		Pay Unit
655.04	Installation of Sensor Loops	Lump Sum

INSTALLATION OF AVI ANTENNAS

The Contractor shall pick up AVI antennas and mounting equipment at the Maine Turnpike headquarters or a nearby maintenance yard as coordinated by the Resident. The Contractor shall install antennas and mounts in accordance with the manufacturer's instructions. Antenna wires shall be installed and looped, the Contractor or SI will terminate equipment wiring while the Contractor is onsite. If the vendor requires additional work during termination and testing the Contractor must be present to assist.

Basis of Payment

Measurement and payment for work associated with the installation of AVI antennas as shown on the Plan drawings and described herein will be per each item. The Contractor will not pay for the purchase of antennas or the AVI equipment vendor's presence to terminate and tune equipment.

Payment will be made under:

Pay Item		Pay Unit
655.05	Installation of AVI Antennas	Each

INSTALLATION OF AVI READERS

The Contractor shall pick up AVI readers at the Maine Turnpike headquarters or a nearby maintenance facility as coordinated by the Resident. The Contractor shall install readers in NEMA 4X cabinets mounted on space frame pedestals as shown on the Plans. AVI readers shall be installed in accordance with the manufacturer's instructions with oversight by the SI onsite as needed (to be determined by Resident). Reader wires shall be installed and looped. The vendor will arrive to terminate wiring while the Contractor is onsite. If the AVI equipment vendor requires additional civil or electrical work during termination and testing the Contractor must be present to assist.

Basis of Payment

Measurement and payment for work associated with the installation of AVI readers as shown on the Plan drawings and described herein will be per each item. The Contractor will not pay for the purchase of readers or the AVI equipment vendor's presence to terminate wiring and tune equipment.

Payment will be made under:

Pay Item		Pay Unit
655.06	Installation of AVI Readers	Each

RELOCATION OF AVI READERS

The Contractor shall remove and relocate the existing cash lane AVI readers to an ORT zone. The Contractor shall reinstall the NEMA 4X cabinets mounted on space frame pedestals as shown on the Plans. AVI readers shall be reinstalled in accordance with the manufacturer's instructions with oversight by the SI onsite as needed (to be determined by Resident). Reader wires shall be installed and looped. The vendor will arrive to terminate wiring while the Contractor is onsite. If the AVI equipment vendor requires additional civil or electrical work during termination and testing the Contractor must be present to assist.

Basis of Payment

Measurement and payment for work associated with the relocation of the AVI reader as shown on the Plan drawings and described herein will be per each item. The Contractor will not pay for the purchase of readers or the AVI equipment vendor's presence to terminate wiring and tune equipment.

Payment will be made under:

Pay Item		Pay Unit
655.061	Relocation of AVI Readers	Each

TRAFFIC CONTROL PEDESTAL (TCP) PREPARATION WORK

Measurement and payment for preparation work for the TCP as shown on the Plan drawings and described herein will be per each item. Note the procurement and installation of the TCP will be by the SI at a point beyond the completion of this Contract. Preparation work shall include drilling and installing threaded rods with adhesive and protection of associated wiring for the TCP in advance of installation of the TCP by the SI. The Contractor shall provide the following items or approved equals for the TCP anchorage system:

- 4 each - 1/2" x 6-1/2" Hilti HAS 304SS threaded rods, nuts (double nut), flat and lock washers.
- 4 each - Hilti HVU adhesive capsules.
- 4 each – 1/2" SS nuts and fender washers for shimming and leveling the pedestal base.

Steps involved for installation of threaded rods are as follows:

1. Using the Pedestal Base detail in Appendix F as a template, layout and drill four 9/16" holes for the 1/2" threaded rods.
2. Using a compressor and wire brush blow gun, clean out the anchor holes.
3. Use the shop vacuum to clean up all of the concrete dust and metal shavings.
4. For all concrete island installations, install the four ½ inch Hilti HAS 304SS threaded rods (using HVU adhesive capsules according to the manufacturer's instructions).

Final location of TCP and alignment of threaded rod pattern layout shall be confirmed by the Resident and the SI prior to threaded rod installation.

Payment will be made under:

Pay Item		Pay Unit
655.07	Traffic Control Pedestal Preparation Work	Each

ARMORED CABLE

This task shall include the providing and installation of armored cable wire, as described herein for clean and dirty power wiring, and other locations called for in the Plans and Specifications.

Wire: as previously specified in the technical provisions of wires & conductors.

Armored cable is intended to be used in above the drop ceiling only.

Measurement and payment for the installation of armored cable wire as described herein will be per foot, to the nearest 10 foot interval per run. It shall include the furnishing, installation, routing, termination, splices and connection of the wire per the wiring schedule.

Payment will be made under:

Pay Item		Pay Unit
655.09	Armor Cable – 10/3	Linear Foot

AWG WIRE

This task shall include the providing and installation of the AWG wire, as described herein for clean and dirty power wiring, for grounding wires (where applicable) and other locations called for in the Plans and Specifications. All wire installed in conduit must be burial grade, suitable for wet locations.

Basis of Payment

Measurement and payment for the installation of the AWG wire as described herein will be per foot, to the nearest 10 foot interval per run. It shall include the furnishing, installation, routing, termination, splices and connection of the wire per the wiring schedule.

Payment will be made under:

Pay Item		Pay Unit
655.08	#2/0 Wire for UPS re-wiring	Linear Foot
655.10	#4 AWG Wire	Linear Foot
655.101	#6 AWG Wire	Linear Foot

655.11	#10 AWG Wire	Linear Foot
655.12	#12 AWG Wire	Linear Foot
655.13	#14 AWG Wire	Linear Foot

4 pr/24 (CATEGORY 5e) CABLE

This task shall include the providing and installation of the Category 5e cable shown on the Plan drawings and described herein.

Cable: 4 pair, 24 AWG, Category 5e, twisted pair cable. Conductor material shall be bare copper, inner jacket material shall be PVC, cable shall be insulated and unshielded. Must be direct burial type suited for harsh conditions 4pr/24 category 5e cable, as approved.

Basis of Payment

Measurement and payment for the installation of the 4pr/24 category 5e cable will be by linear foot to the nearest 10 ft. interval. It shall include the furnishing, installation and routing of the cable per the wiring schedule.

Payment will be made under:

Pay Item		Pay Unit
655.14	4pr/24 (Category 5e) Cable	Linear Foot

LMR 400 CABLE

This task shall include the providing and installation of the LMR 400 cable shown on the Plan drawings and described herein. The contractor will terminate the LMR 400 Cable with the RF Male-RFN-100631 and RF Female-RFN-1028-SI. The male terminal end is at the antenna and the female terminal end is at the AVI Reader. The contractor shall solder the end of the terminal end pins instead of crimping.

Cable: LMR 400 cable, as approved.

Basis of Payment

Measurement and payment for the installation of the LMR 400 cable will be by linear foot to the nearest 10 ft. interval. It shall include the furnishing, installation and routing of the cable per the wiring schedule.

Payment will be made under:

Pay Item		Pay Unit
655.15	LMR 400 Cable	Linear Foot

FIBER OPTIC CABLE

This task shall include the providing and installation of 62.5/125 micron multimode fiber optic cable as shown on the Plan drawings and described herein. The following Specifications for the selection and installation of fiber-optic cable and associated hardware are intended to ensure a reliable and consistent fiber optic media infrastructure for the MTA. All fiber optic cable termination and the fiber optic patch panels will be provided by the Contractor

Cable: 6-Fiber multi-mode multi-mode Fi, 100 mbs, 62.5/125 Microns, Indoor/Outdoor Riser Rater, ST (Male) Connection, as approved

Specifications: Fiber installed must meet or exceed the following Specifications:

- Multimode fiber installed cable shall be 62.5/125micron core/cladding, enhanced grade, multimode, and graded index glass fiber. All materials in the cable shall be dielectric.

- Installed fiber must meet or exceed the following performance Specifications:

Wavelength (nm)	Max. Attn.(dB/Km)	Min. Bandwidth (Mhz*Km)
850	3.0	200
1,300	0.9	500

- Plenum rated cable shall be used for all interior installations. Plenum rated cable shall be:

  - Tight buffered 900 um
  - Mechanical strippable Teflon (for plenum applications)
  - EIA/TIA -598 color coding for fiber optic cable
  - Aramid yarn strength member
  - Capable of supporting a short-term tensile load of 400 lb. without stretching.
  - Capable of bend radii as small as 20 x outside cable diameter (under installation load) and 10 x outside cable diameter (long term load)
  - Capable of a minimum crush resistance of 850 lb./in.

- Corning and Berk-Tech fiber are currently recommended for installation. Cable from other manufacturers will be considered. All cable installed must be cleared by MTA prior to installation.

All cable is to be fully supported throughout its entire run.

At no time shall more than 400 pounds of tension be placed on any fiber cable while it is being pulled through tray or conduit. It is preferred that all fiber cable be pulled with hand power only. If power winches or mechanical advantage devices are used to pull cable, a tensionometer must be used to insure that maximum tension is not exceeded. Alternatively, a "mechanical fuse" rated at 350 pounds may be included in the linkage. Torsion shall be avoided by the use of a swivel at the cable end. While under tension, a minimum bend radius of 20 times the outside cable diameter will be maintained through the use of pulleys and sheaves where required. After pulling, no bend may have a radius, at rest, of less than 10 times the outside cable diameter.

Each cable is to be permanently labeled at each end with a unique cable number. In addition, labels shall be affixed to the cable at every transition of a vault, hand hole, riser closet, or major pull box.

Each fiber optic strand shall be labeled with a unique identifier at the ST coupler.

Fiber ends are to be terminated in ST-type connectors. No splices will be permitted. The cable shall be continuous run from LC to server room fiber switch location.

At each end of the cable, sufficient slack (15 - 30') shall be left to facilitate reasonable future relocation of the fiber switch or LC. Slack shall be mounted on walls or upper ladder racks.

Testing: Contractor shall test all long reels with an OTDR for length and transmission anomalies while on the reel prior to installation. It is suggested that each individual fiber in a cable regardless of length be tested with an OTDR for length and transmission anomalies while on the reel before installation.

All multimode fiber strands shall be tested end-to-end for bi-directional attenuation, 850 nm/1300 nm for multimode. Tests should be conducted in compliance with EIA/TIA-526-14 or OFSTP 14, Method B, according to the manufacturer's instructions for the test set being utilized.

Tests must ensure that the measured link loss for each strand does not exceed the "worst case" allowable loss defined as the sum of the connector loss (based on the number of mated connector pairs at the EIA/TIA-568 B maximum allowable loss of 0.75 dB per mated pair) and the optical loss (based on the performance standard above, 2.1.1 and 2.2.1).

After termination, each fiber shall be tested with an ODTR for length, transmission anomalies, and end-to-end attenuation. Results are to be recorded and supplied to MTA in the form of hard-copy printouts or photographs of screen traces.

After termination each terminated fiber is to be tested for end-to-end loss with a power meter/light source. As above, results are to be recorded and supplied to MTA.

The Contractor shall review all end faces of field terminated connectors with a fiber inspection scope following the final polish. Connector end faces with hackles, scratches, cracks, chips and or surface pitting shall be rejected and repolished or replaced if repolishing will not remove the end face surface defects. The recommended minimum viewing magnifications for connector ends are 100X for multimode fiber and 200X for single mode fiber.

Basis of Payment

Measurement and payment for the installation of the Fiber Optic cable will be by linear foot to the nearest 10 foot interval. It shall include the furnishing, installation, termination and routing of the cable per the wiring schedule.

Payment will be made under:

Pay Item		Pay Unit
655.16	Fiber Optic Cable – 6 Fiber	Linear Foot

IVIS HOMERUN LOOP CABLE (IMSA 50-2 #16)

This task shall include the providing and installation of the IVIS homerun loop cable (IMSA 50-2 #16) shown on the Plan drawings and described herein.

Cable: IMSA 50-2 #16 cable loop detector wire shall be as follows:

- Conductors: Solid or stranded tin copper
- Insulation: Polyethylene
- Conductor Configuration: Twisted pair
- Shield: Aluminum/Mylar tape
- Outer Jacket: Low-density polyethylene

Cable shall have two conductors, #16 AWG, 19 strand. Cable must be direct burial grade suitable for installation in the tunnel, beneath the roadway, within the barrier and any other locations shown on the Plan or described within the design documents. All loop sensor homerun cables shall have tape with length markings.

Basis of Payment

Measurement and payment for the installation of the IMSA 50-2 #16 cable will be by linear foot to the nearest 10 foot interval. It shall include the furnishing, installation and routing of the cable per the wiring schedule.

Payment will be made under:

Pay Item		Pay Unit
655.17	IVIS Homerun Loop Cable (IMSA 50-2 #16)	Linear Foot

HALF DIAMOND LOOP WIRE (#16 XHHW OR XLP STRANDED WIRE)

This task shall include providing and installation of the half diamond loop wire, as called for in the Plans and Specifications. Half diamond loop wire shall be hand wound and placed with 4 turns of #16 XHHW or XLP stranded wire. The tail loop lead shall be twisted similar to the provided IVIS sensor loops. Half diamond sensors are not provided by the SI as is the case for the preformed full loop sensor.

Basis of Payment

Measurement and payment for the installation of the half diamond loop wire as described herein will be per foot, to the nearest 10 foot interval per run. It shall include the furnishing, installation, routing, termination, splices and connection of the wire per the wiring schedule.

Payment will be made under:

Pay Item		Pay Unit
655.18	Half Diamond Loop Wire (#16 XHHW or XLP Stranded Wire)	Linear Foot

500 MCM WIRE

This task shall include the providing and installation of the AWG 500 MCM Type THWN-2 Wire shown on the Plan drawings and described herein. The contractor shall make all needed connection/terminations for the plaza side of the electrical service.

Basis of Payment

Measurement and payment for the installation of the 500 MCM Wire will be by linear foot to the nearest 10 ft. interval. It shall include the furnishing, installation and routing of the cable per the wiring schedule.

Payment will be made under:

Pay Item		Pay Unit
655.19	500 MCM Wire	Linear Foot

50 Pair 24AWG Telephone Cable - PE89 Direct Burial

This task shall include the providing and installation of the 50 Pair 24AWG Telephone Cable - PE89 Direct Burial as shown on the Plan drawings and described herein. The contractor shall make all needed connection/terminations for the plaza side of the communication service.

Basis of Payment

Measurement and payment for the installation of the 50 Pair 24AWG Telephone Cable - PE89 Direct Burial will be by linear foot to the nearest 10 ft. interval. It shall include the furnishing, installation and routing of the cable per the wiring schedule.

Payment will be made under:

Pay Item		Pay Unit
655.191	50 Pair 24AWG Telephone Cable - PE89 Direct Burial	Linear Foot

PVC CONDUIT

This task shall include providing and the installation of PVC Conduit as shown on the Plan drawings and described herein. All conduit shall be installed per NEC specification. Connections to specialized fittings are to be compatible with adjoining conduit.

Joints shall be made in accordance with ASTM D 2855. Solvent cement shall meet the requirements of ASTM D 2564 with particular attention to matching the viscosity to the conduit size.

Joint adhesives shall be in accordance with ASTM D2517.

All conduit runs shall be watertight. Slope conduit to drain into junction boxes.

All empty conduits shall have a labeled pull string. Pull strings shall have length markings and should be used for long conduits over 50 feet or for all underground installations. Clean, plug and seal conduit ends after installation.

Basis of Payment

Measurement and payment for installing PVC Conduit as shown on the Plan drawings and described herein will be per linear foot of each type of underground or exposed conduit actually furnished, installed, and accepted at the Contract price per linear foot. It shall include the furnishing, installing, supporting and connection of the conduit and all various hardware necessary for the installation. This price shall include the cost of hand digging, trenching, or plowing; furnishing and installing the conduit; furnishing special backfilling materials, pull string, fittings, groundings and bonding; test cleaning interiors of conduits and all materials, labor, equipment and incidentals necessary to complete the work.

Payment will be made under:

Pay Item		Pay Unit
655.200	1-½" Schedule 40 PVC Conduit	Linear Foot
655.201	3" Schedule 40 PVC Conduit	Linear Foot
655.202	4" Schedule 40 PVC Conduit	Linear Foot
655.2021	1" Schedule 80 PVC Conduit	Linear Foot
655.203	1-½" Schedule 80 PVC Conduit	Linear Foot
655.2031	2" Schedule 80 PVC Conduit	Linear Foot
655.204	3" Schedule 80 PVC Conduit	Linear Foot
655.205	4" Schedule 80 PVC Conduit	Linear Foot
655.2051	6" Schedule 80 PVC Conduit	Linear Foot

GALVANIZED RIGID METAL CONDUIT (RMC)

This task shall include providing and the installation of Galvanized RMC as shown on the Plan drawings and described herein. All fittings shall be threaded, or approved compression type (approved by the engineer and compatible with the conduit), so as to be waterproof. Conduit shall be installed and grounded per NEC regulations. All supports shall be hot dipped galvanized or stainless steel (approved by the engineer and compatible with the conduit).

Basis of Payment

Measurement and payment for furnishing and installing the Galvanized RMC as shown on the plan drawings, where necessary, and described herein will be per foot. It shall include the

furnishing, installing, supporting and connection of the conduit and misc. hardware necessary for the installation.

Payment will be made under:

Pay Item		Pay Unit
655.206	1” Galvanized Rigid Metal Conduit	Linear Foot
655.207	1-½” Galvanized Rigid Metal Conduit	Linear Foot
655.208	3” Galvanized Rigid Metal Conduit	Linear Foot

LIQUID TIGHT METALLIC FLEXIBLE CONDUIT

This task shall include providing and the installation of Liquid Tight Metallic Flexible Conduit as shown on the Plan drawings and described herein. All conduit shall be watertight with flexible PVC coating over galvanized steel flex tubing. Conduit shall be installed and grounded per NEC regulations. All supports for shall be hot dipped galvanized or stainless steel. Connections shall be specialized fittings to be compatible with adjoining conduit and watertight.

Basis of Payment

Measurement and payment for installing the Liquid Tight Metallic Flexible Conduit as shown on the Plan drawings and described herein will be per linear foot actually furnished, installed, and accepted at the Contract price per linear foot. This price shall include the cost of: furnishing and installing the conduit; pull string, fittings, groundings and bonding; test cleaning interiors of conduits and all materials, labor, equipment and incidentals necessary to complete the work.

Payment will be made under:

Pay Item		Pay Unit
655.209	½” Liquid Tight Metallic Flexible Conduit	Linear Foot
655.210	¾” Liquid Tight Metallic Flexible Conduit	Linear Foot
655.2101	1-½” Liquid Tight Metallic Flexible Conduit	Linear Foot
655.2102	2” Liquid Tight Metallic Flexible Conduit	Linear Foot

ELECTRICAL METALLIC TUBING (EMT) CONDUIT

This task shall include the installation of the EMT as shown on the Plan drawings and described herein. All fittings shall be an approved compression type (approved by the engineer and compatible with the conduit). Conduit shall be installed and grounded per NEC regulations. All supports for conduit shall be galvanized steel (with similar or better galvanizing than the tubing). Fittings are to be joined using couplings as recommended by the manufacturer.

Basis of Payment

Measurement and payment for installing the EMT as shown on the Plan drawings and described herein will be per foot actually furnished, installed, and accepted at the Contract price

per linear foot. This price shall include the cost of: furnishing and installing the conduit; pull string, fittings, groundings and bonding; test cleaning interiors of conduits and all materials, labor, equipment and incidentals necessary to complete the work.

Payment will be made under:

Pay Item		Pay Unit
655.211	1-½" Electrical Metallic Tubing Conduit	Linear Foot
655.212	2" Electrical Metallic Tubing Conduit	Linear Foot
655.213	3" Electrical Metallic Tubing Conduit	Linear Foot
655.214	4" Electrical Metallic Tubing Conduit	Linear Foot
655.215	¾" Electrical Metallic Tubing Conduit	Linear Foot

INSTALLATION OF PULL BOXES

This task shall include providing and installing:

- The type A pull box for interior, dry locations as shown on the Plan drawings and detailed herein, or where used elsewhere.
    - Materials: 4" x 4" x 2" steel; equal to Appleton 4SD1 or better.

- The type C pull box as shown on the Plan drawings and detailed herein. The C pull box shall be installed in booth pits, or building utility pits, or where PVC conduit is used.
    - Materials: 18" x 18" x 6" metal, NEMA 3R; Painted steel.

- The type D pull box as shown on the Plan drawings and detailed herein, or where used elsewhere.
    - Materials: 6" x 6" x 4" NEMA 4X.

- The type E pull box as shown on the Plan drawings and detailed herein. The E pull box shall be installed in booths/buildings in dry locations to pull communications cables, or shown elsewhere on the Plans, or where needed to complete the work.
    - Materials: 6" x 6" x 6" steel, indoor rated; equal to Hoffman A-606CH or better.

- The type F pull box as shown on the Plan drawings and detailed herein. The F pull box shall be installed in booth pits, or building utility pits, or where this size is to be used in a wet location or exterior location.
    - Materials: 4" x 4" x 4" plastic, medium duty; equal to or better than Appleton JIC-2

If equipment is to be installed at a later date insure adequate slack in the junction box for termination and additional 4 inch for possible re-termination. For pass through junction boxes no slack is required. For specific equipment the following guidelines apply:

- Sensor Loops: A single slack loop of 12” – 24” for convenience of splicing.
- DVAS: Slack loop to allow for distance to mounting location of camera plus an additional 3 feet.
- LC: 4 feet of slack at LC mounting location.

Basis of Payment

Measurement and payment for installing the pull boxes as shown on the Plan drawings and described herein will be per each item. It shall include the furnishing, installation, mounting of the box, and the drilling of holes into the box for conduits.

Payment will be made under:

Pay Item		Pay Unit
655.221	Type A Pull Box Inside	Each
655.222	Type C Pull Box In Tunnel	Each
655.223	Type D Pull Box Outdoor Canopy	Each
655.224	Type E Pull Box Steel in Booth	Each
655.225	Type F Pull Box Outside	Each

GALVANIZED STEEL JUNCTION BOX

This task shall include providing and installing galvanized steel watertight junction boxes measuring 12” x 12” x 6” or 18” x 18” x 6” to provide an access point from rigid metal conduit to tolling equipment mounted to the space frame as shown in the Plan drawings. Junction boxes must be approved by Resident.

Basis of Payment

Measurement and payment for installing the junction boxes as shown on the Plan drawings and described herein will be per each item. It shall include the furnishing, installation, mounting of the box, and the drilling of holes into the box for conduits.

Payment will be made under:

Pay Item		Pay Unit
655.30	12” x 12” x 6” Galvanized Junction Box	Each
655.31	18” x 18” x 6” Galvanized Junction Box	Each

24” x 24” x 12” JUNCTION BOX

This task shall include providing and installing 24” x 24” x 12” watertight junction boxes to be cast-in-place into the barrier as shown in the Plan drawings. Junction box shall be nonmetallic or galvanized and able to be placed in concrete. Access must be provided through the top cover which shall be flush with the top of barrier after placement. Junction boxes must be approved by Resident.

Basis of Payment

Measurement and payment for installing the junction boxes as shown on the Plan drawings and described herein will be per each item. It shall include the furnishing, installation, mounting of the box, and the drilling of holes into the box for conduits.

Payment will be made under:

Pay Item		Pay Unit
655.40	24” x 24” x 12” Junction Box	Each

36” x 30” x 20” NEMA 4X CABINET

Provide and install NEMA 4X stainless steel equipment cabinets as designated on the Plan drawings to house the AVI Readers. Cabinets shall provide equipment mounting rails as appropriate and shall provide sufficient space for the enclosed equipment. Doors for the equipment cabinets shall be secured with standard interchangeable cylinder locks that match the existing (BEST) system presently in use by MTA. A closed cell neoprene gasket shall be utilized to prevent water entry at the door. A handle controlled latching system shall be included to simplify access to the cabinets. The door shall be able to be opened and closed without need for separate latching hardware. A 120-Volt single-phase three-wire circuit shall be furnished and installed for clean power to a quadplex receptacle (Type 5-15R) that shall be provided within each cabinet as shown on the Plans. The quadplex receptacles shall be orange with stainless steel cover.

AVI Reader cabinets shall be NEMA-4X with minimum dimensions of:

- Height 36”
- Width 30”
- Depth 20”

AVI Reader cabinets shall be fabricated with internal pieces of aluminum angle that is positioned to support the reader and provide 19 inch wide rack mounting with minimum depth of 15 inches. The AVI Reader and associated contiguous RF rack height is 21.05 inches. Mounting shall be configured per RS-310 (EIA rack spacing).

Basis of Payment

Measurement and payment for installing the NEMA 4X Cabinets as shown on the Plan drawings and described herein will be per each item. It shall include the furnishing, installation, mounting of the box, and the drilling of holes into the box for conduits. Installation of receptacles and completion of all conduits and wiring associated with the cabinet shall be incidental.

Payment will be made under:

Pay Item		Pay Unit
655.42	36” x 30” x 20” NEMA 4X Cabinet	Each

60 AMP PANELBOARD CABINET

Provide and install 60 amp panelboard cabinet as designated on the Plan drawings. Panelboard cabinet shall be of the dead-front, safety type with space for 24 single pole breakers. Cabinet shall be constructed of zinc coated sheet steel and shall conform to Underwriters Laboratories, Inc, Standard for Cabinet and Boxes.

Panelboard cabinet height shall not exceed 72 inch and shall be mounted so that the distance from the floor to center of the top circuit breaker will not exceed 6 feet. Cabinet shall be provided with trims having adjustable trim clamps. Trims, unless otherwise noted, shall be fitted with hinged doors.

Basis of Payment

Measurement and payment for installing the panelboard cabinet as shown on the Plan drawings and described herein will be per each item. It shall include the furnishing, installation, mounting of the cabinet, and the drilling of holes into the box for conduits.

Payment will be made under:

Pay Item		Pay Unit
655.43	60 AMP Panelboard Cabinet	Each

SCHEDULE 80 PVC CONDULETS

This task shall include the installation of Schedule 80 PVC condulets where called for on the plans, or where called for on installation drawings. Fittings for PVC condulets are to be joined using couplings and approved solvent, as recommended by the manufacturer. Types of condulets include, but are not limited to “LB”, “T”, “LR”, “LL”. All openings shall have rubber gaskets.

Basis of Payment

Measurement and payment for installing the condulets as described herein will be per item. It shall include the furnishing, installation and mounting of the condulet, and all associated hardware.

Pay Items are as follows:

Pay Item		Pay Unit
655.51	4” Schedule 80 PVC Conduit Condulets	Each

RMC CONDULETS

This task shall include the installation of Rigid Metal condulets where called for on the plans, or where called for on installation drawings. The condulets shall be hot dipped galvanized and waterproof, with threaded couplings or approved compression type couplings (if recommended by the manufacturer and compatible with adjoining conduit). Types of condulets include, but are not limited to “LB”, “T”, “LR”, “LL”. All openings shall have rubber gaskets.

Basis of Payment

Measurement and payment for installing the condulets as described herein will be per item. It shall include the furnishing and installation and of the condulet, and all associated hardware.

Pay Items are as follows:

Pay Item		Pay Unit
655.52	1” Rigid Metal Conduit Condulets	Each
655.53	1 ½” Rigid Metal Conduit Condulets	Each

EMT CONDULETS

This task shall include the installation of EMT condulets where called for on the plans, or where called for on installation drawings. The condulets shall be hot galvanized steel and waterproof, with approved compression type couplings (if recommended by the manufacturer and compatible with adjoining conduit). Types of condulets include, but are not limited to “LB”, “T”, “LR”, “LL”. All openings shall have rubber gaskets.

Basis of Payment

Measurement and payment for installing the condulets as described herein will be per item. It shall include the furnishing, installation and mounting of the condulet, and all associated hardware.

Pay Items are as follows:

Pay Item		Pay Unit
655.55	3” Electrical Metal Tubing Condulets	Each

PLASTIC WIREWAY

This task shall include providing and the installation of plastic wireway in the tunnel as shown on the Plan drawings and/or described herein. Wireways shall be plastic NEMA 4R, and shall be installed and grounded per NEC regulations. All supports for wireways shall be hot dipped galvanized or stainless steel.

Basis of Payment

Measurement and payment for installing the Plastic Wireways as shown on the Plan drawings and described herein will be per foot, to the nearest two foot increment above the final installed segment. It shall include the furnishing, installing, supporting and connection of the wireway and all misc. hardware necessary for the installation. It shall also include all end caps, covers, drilling of holes for conduits, fabrications for 90 degree bends, etc.

Payment will be made under:

Pay Item		Pay Unit
655.63	4-inch x 4-inch Plastic NEMA 4R Wireway	Linear Foot
655.64	6-inch x 6-inch Plastic NEMA4R Wireway	Linear Foot

REMOVAL OF EXISTING SELECT TOLL EQUIPMENT

The work shall include the removal of existing select toll equipment, defined as the cables/conduit related to removed equipment, existing island traffic light, light curtains, and overhead scanner. Work shall be coordinated with the SI who will be responsible for removing the existing VES cameras, VES lighting, mounting pole(s) and height detector. The removal of existing select toll equipment shall include removing all associated equipment, enclosures, associated pedestals, removing any grout bases, cutting anchor bolts flush with surface, and grouting over any holes or irregularities. It shall also include removal of all associated power and data cables from the existing LC, and the removal of dirty power to the VES lights after removal of VES equipment by the SI. All cables/wires/conduits abandoned from the removal of the existing select toll equipment shall be removed (unless housed in a conduit with other cables, making it impossible to remove without removing and replacing the cables/wires that are staying). Removing abandoned cables/wires/conduits shall be incidental. All existing select toll

equipment removed shall be done with care, without harm to the equipment, and shall be stacked at the System Integrator Warehouse in Portland, ME.

Basis of Payment

Payment will be made under:

Pay Item		Pay Unit
655.71	Removal of Existing Select Toll Equipment	Lump Sum

KEY SWITCH

A key switch similar to existing key switches in use within the toll system shall be installed in line between clean power panel and power lead for each pair of VES cameras and each DVAS camera.

Basis of Payment

Work shall include furnishing all materials and hardware, and labor and equipment to install. All conduit and wires will be paid under separate pay items.

Payment will be made under:

Pay Item		Pay Unit
655.81	Key Switch	Each

RECEPTACLE BOXES

A convenience duplex outlet of NEMA type 5-15R may be required near new ORT lane controllers at a location to be determined by the Resident and the SI and in new toll booths. Covers shall be stainless steel.

NEMA type L5-30R receptacles are required for the Cash Lanes where shown on the Plan drawings and installation instructions. Additional receptacle locations maybe determined by the Resident and SI. Covers shall be stainless steel.

A Quadplex receptacle is two NEMA type 5-15R may be required near new ORT lane controllers at a location to be determined by the Resident and the SI and in new toll booths. Covers shall be stainless steel.

Basis of Payment

Work shall include furnishing all materials and hardware, and labor and equipment to install. All conduit and wires will be paid under separate pay items.

Payment will be made under:

Pay Item		Pay Unit
655.82	Duplex Receptacle	Each
655.83	NEMA L5-30R Receptacle	Each
655.84	Quadplex Receptacle	Each

ELECTRICAL/COMMUNICATION VAULT/MANHOLE

Provide and install an electrical/communications manhole as designated on the Plan drawings. The manholes shall be HS-20 load rated.

Basis of Payment

Work shall include furnishing all materials and hardware, and labor and equipment to install electrical/communications manholes as designated on the Plan drawings.

Payment will be made under:

Pay Item		Pay Unit
655.85	Electrical/Communications Vault/Manhole	Each

SPECIAL PROVISION

SECTION 655

CONCRETE ENCASED CONDUIT

655.71 Description

This work shall consist of encasing all conduit within the limits of the proposed conduit raceway section between the penetration from the tunnel to the structural slab infill opening. This work shall be completed in accordance with the Specifications, in reasonably close conformity with the lines and grades shown on the Plans or as approved by the Resident.

655.72 Materials

Concrete shall conform to Section 502, Structural Concrete, using 3/4 inch (19 mm) maximum size coarse aggregate (Class AAA).

PVC spacers shall be the interlocking type of strength and spacing to hold raceways straight and true with spacing between raceway outside diameter of no less than three inches, horizontal. Conduit must be laid out and spaced as depicted in the Plan drawings.

Duct-sealing compound shall be non-hardening, safe for contact with human skin, not deleterious to cable insulation, and workable at temperatures as low as 35°F. It shall be capable of withstanding temperature of 300°F without slump and of adhering to clean surfaces of plastic ducts, metallic conduits, conduit coatings, concrete, masonry, lead, cable sheaths, cable jackets, insulation materials, and common metals.

Waterproof membrane used for sealing duct bank penetration into tunnel shall be Tremco – Paraseal Membrane or an approved equal. A waterstop will be used in conjunction with the membrane and shall be Tremco Parastop or an approved equal. Both membrane and waterstop will be installed as per manufactures guidelines.

655.73 Execution

All raceways shall be securely fastened in place during construction and progress of the work. Concrete wall penetrations shall be plugged to prevent seepage of grout, water, or soil into the tunnel.

Trenches for conduit may be excavated manually or with mechanical trenching equipment where practical. Walls of trenches shall be essentially vertical so that a minimum of shoulder surface is disturbed. The Contractor shall ascertain the type of soil or rock to be excavated before bidding. All excavation shall be incidental to concrete encased conduit construction.

Existing concrete slab and tunnel wall openings shall be sawcut along the limits of concrete removal. Saw cutting for the tunnel and slab penetrations shall be considered incidental. Excavation limits of the concrete encased conduit will in accordance with the

details shown on the Plans, unless otherwise approved by the Resident to provide access to the outer tunnel wall.

655.75 Basis of Payment

Measurement and payment for work associated with the concrete encased conduit as shown on the Plan drawings and described herein will be per cubic yard of concrete, based on the concrete encased conduit section dimensions detailed with no deduction for the space occupied by the conduit.

All work and materials necessary to install the concrete encased conduit will be incidental to the item, including excavation and saw cutting of existing concrete tunnel wall penetrations and the structural slab infill locations. All new conduit, wireway, wires and data cables installed will be paid under its appropriate pay item.

Payment will be made under:

Pay Item		Unit
655.75	Concrete Encased Conduit	Cubic Yard

SPECIAL PROVISION

SECTION 655

ELECTRICAL

(Lightning Suppression System)

655.81 Description

This task shall include furnishing and installing the lightning protection system for the ORT and the canopys. This work shall be completed in accordance with the Specifications, in reasonably close conformity with the lines and grades shown on the Plans or as approved by the Resident.

The task also includes obtaining a UL Master Label Certificate for the completed lightning protection as a UL Class I ordinary structure.

655.82 Submittals

1. Product Data: For air terminals and mounting accessories, grounding conductors, grounding electrodes, and ground connection equipment.

2. Shop Drawings: Detail lightning protection system, including air-terminal locations, conductor routing and connections, and bonding and grounding provisions. Include indications for use of raceway, data on how concealment requirements will be met, and calculations required by NFPA 780 for bonding of grounded and isolated metal bodies.

3. Qualifications: Qualification data for firms and persons specified in "Quality Assurance" Article to demonstrate their capabilities and experience. Include data on listing or certification by an NRTL or LPI.

4. Inspection: Field inspection reports indicating compliance with UL Master Label Certification.

655.83 Quality Assurance

1. Installer Qualifications: Engage an experienced installer who is an NRTL or who is certified by LPI as a Master Installer/Designer. Installer shall be UL listed as a lighting protection installer.

2. Listing and Labeling: All system components utilized in the installation shall comply with the Standard for Lightning Protection Components, UL 96A.

655.84 Coordination

Coordinate installation of lightning protection with installation of other tolling systems and components, including electrical wiring, supporting structures and materials, metal bodies requiring bonding to lightning protection components, and finishes.

Coordinate installation of air terminals attached to space frame with space frame manufacturer.

655.85 Products

Subject to compliance with requirements, provide products by one of the following manufacturers or approved equal:

1. Automatic Lightning Protection.
2. ERICO International Corporation.
3. Harger Lightning Protection, Inc.
4. Heary Bros. Lightning Protection Co. Inc.
5. Independent Protection Co.
6. Robbins Lightning Inc.
7. Thompson Lightning Protection, Inc.

Air Terminals shall be NFPA Class I, solid copper, 3/8” diameter, by 24” tall or 10” tall, as indicated on the Contract Drawings. Main roof conductors as down conductors shall be bare copper in sizes as indicated on the Contract Drawings. Grounding electrodes shall be copper-clad steel, 3/4” diameter by 10’-0” long.

655.86 Execution

All work shall conform to the requirements contained in the latest edition of UL 96A, Installation Requirements for Lightning Protection Systems, and in the latest edition of NFPA 780 Standard for the Installation of Lightning Protection Systems.

Install conductors with direct paths from air terminals to ground connections. Conductors shall be supported for their entire length without travel through free air. No bend of a conductor shall form an included angle of less than 90 degrees or have a radius of bend less than 8 inches.

Conductors shall not be directly attached to aluminum or galvanized steel. Do not combine materials that can form an electrolytic couple that will accelerate corrosion in the presence of moisture unless moisture is permanently excluded from junction of such materials.

Main conductors shall be fastened at intervals not exceeding 3 feet.

Down conductors shall be installed within Schedule 80 PVC conduit for physical protection.

Cable Connections: Use UL listed connectors or approved exothermic-welded connections for all conductor splices and grounding connections.

UL Inspection: Provide inspections as required to obtain a UL Master Label Certification for the system.

LPI Certification: Provide an inspection by an inspector certified by LPI to obtain an LPI certification.

655.87 Method of Measurement

Lightning Suppression Systems will be measured by lump sum for complete system installation as shown in the plans.

655.88 Basis of Payment

The accepted quantity of Lightning Suppression System will be paid for at the Contract unit price of lump sum which shall include excavation, air terminals, grounding rods, heavy duty ground test wells with covers, copper wire, and all associated hardware for a complete operational system.

Payment will be made under:

Pay Item		Unit
655.80	Lightning Suppression System	Lump Sum

SPECIAL PROVISION

SECTION 655

ELECTRICAL

(Space Frame Lighting)

655.91 Description

This task shall include furnishing, mounting and wiring the space frame lighting and photocell sensors in accordance with these Specifications, and as shown on the Plans or as approved by the Resident.

655.92 Materials

Lighting fixtures shall be Cree Edge TSP or similar containing a minimum of 120 LEDs with a drive current of 525 mA. Driver housing and light fixture casing shall be watertight. Lighting fixtures shall be compatible with a universal voltage supply, 120-277 VAC, 50/60 Hz input. The lighting units shall come with a 10 year warranty and have an expected life minimum of 100,000 hours. Lighting fixtures shall be approved by the Resident. Each space frame lighting circuit shall be equipped with a photocell sensor.

Design of the mounting connections to attach the lighting fixtures to the space frame and of the photocell to the structure shall be provided by the contractor once the details of the space frame are known and provided. The connections must be approved by a licensed engineer in the State of Maine prior to installation. Final locations and mountings to be approved by the Resident and the SI prior to installation of lighting and associated power conduits.

655.93 Execution

Lighting fixtures shall be installed as per; manufactures recommendations, NEC Standards, Plans, and Specifications.

The Contractor shall submit a proposed method of attaching all ancillary components to the space frame to the Resident for approval. The proposed attachment method shall not require drilling, welding or other attachment methods that will damage the space frame or its galvanized coating. Any areas of galvanized coating that are damaged by the Contractor during installation of ancillary components shall be repaired in accordance with ASTM A780.

655.94 Basis of Payment

The space frame lighting will be paid for at the Contract unit price of lump sum which shall include all associated hardware and mounting equipment required for a complete operational system. Conduit and wiring shall be paid for under the respective items.

Payment will be made under:

Pay Item		Pay Unit
655.90	Space Frame Lighting	Lump Sum

SPECIAL PROVISION

SECTION 655

ELECTRICAL WORK

(LED Replacement Canopy Light Fixture)

655.01 Description

This work shall consist of furnishing and installing two (2) new LED light fixtures (into existing light housing, both recessed and surfaced mounted) per lane in the existing toll plaza canopy and two (2) new LED light fixtures with housing per lane in the new toll plaza canopy in accordance with these Specifications, and as shown on the Plans or as approved by the Resident. All remaining light fixtures shall have the bulbs removed.

655.011 General

The Contractor shall submit a shop drawing and an installation plan for installing new LED fixtures into the existing light fixture housings for approval.

The Contractor shall transport all working existing light fixtures and bulbs removed to the Maine Turnpike Sign Shop at Mile 58.3 Northbound.

655.02 Materials

Provide products produced by:

- CREE Inc. – BetaLED 304 Series

655.03 Method of Measurement

LED replacement light fixtures will be measured by each unit, installed, and accepted.

655.04 Basis of Payment

LED replacement light fixtures will be paid for at the Contract unit price each which payment shall be full compensation for the removal of the existing light fixtures, furnishing and installation of the new light fixture into the existing fixture housing, stacking, delivery, and all other materials, labor, tools, equipment and incidentals necessary to complete the work.

Payment will be made under:

Pay Item		Unit
655.91	LED Replacement Canopy Light Fixture	Each
655.92	LED Canopy Light Fixture	Each

SPECIAL PROVISION

SECTION 655

ELECTRICAL WORK

(Tunnel Life Safety)

655.01 Description

This work shall consist of furnishing and installing materials and components for Local Smoke Alarm with entrance strobes; tunnel light with a combination of always-on and motion activated; and EXIT signs at the bottom of each tunnel entrance as well as all other related conduit, wiring and all needed mounting hardware described in the Plan drawings and this specification.

655.011 General

The work in this item includes, but is not limited to installation of, or portions thereof, the following:

a. Smoke Alarm System (Local): Combination smoke detector/horn/strobe: Gentex model 713CS-C. The units shall be installed at each end of the tunnel and spaced along the tunnel no more than 30 feet on center. A maximum of six units can be interconnected. These are 120 volt units that must be hard-wired together.

b. EXIT signs: Exit sign: Dual-Lite model # LXURW: The exit signs shall be installed at each end of the tunnel.

c. Tunnel Lights : CREE Model # WS4-47L-35K-10V-SSL: To be installed as per the plan sheets.

655.04 Basis of Payment

The Tunnel Life Safety will be paid for at the Contract unit price of lump sum which shall include all associated hardware and mounting equipment required for installation. Conduit and wiring shall be incidental to the Lump Sum Item.

Payment will be made under:

Pay Item		Unit
655.93	Tunnel Life Safety	Lump Sum

SPECIAL PROVISION

SECTION 656

TEMPORARY SOIL EROSION AND WATER POLLUTION CONTROL

Section 656 of the Standard Specifications and the General Provisions is deleted in its entirety and replaced with the following:

656.01 Description

This work shall consist of providing temporary erosion and water pollution control during construction in accordance with these Specifications, standard details, Best Management Practices, or as otherwise directed.

All temporary erosion control devices shall be in place and approved by the Resident prior to any operations resulting in disturbed area. The Contractor is responsible for maintaining all erosion control measures in effective operating condition, including repairing and replacing damaged or missing erosion control material until areas are permanently stablized. The Contractor shall maintain these devices in a clean and properly operating condition as described herein.

Prior to construction, the Contractor shall properly install sediment barriers (e.g., silt fence) at the edge of any downgradient disturbed area and adjacent to any drainage channels within the distrubed area. The Contractor shall maintain the sediment barriers until the disturbed area is permanently stabilized.

The Contractor is responsible for all temporary drainage and erosion control measures. The Contractor shall review his construction operations and staging to determine if additional erosion control measures are required. The Resident may also request additional erosion control measures. The cost for all erosion control devices necessary, due solely to the Contractor's construction operations and not shown on the Plans, shall be borne solely by the Contractor. The frequency of inspection of these devices by the Contractor and the Erosion Control Compliance Officer (ECCO) shall be weekly and before, during and immediately following a rainfall of greater than 1/2 inch in a 24-hour period.

656.02 Temporary Erosion and Sedimentation Control Devices - Materials

The Contractor shall install and maintain all temporary erosion and sedimentation control materials in accordance with the manufacturer's recommendations or the latest BMP's.

1. Baled hay shall be bales at approximately 14 by 18 by 30 inches, or an equivalent, securely tied to form a firm bale.
2. Flexible drainage pipe shall consist of collapsible neoprene pipe, a minimum of 12 inches in diameter or equal.
3. Silt Fence

    (a) Posts - Either hardwood posts or steel posts shall be used. Hardwood posts shall be straight, at least 18 inches longer than the height of the silt fence

and at least one inch by one inch.

Staples shall be of No. 9 wire.

Steel posts shall be at least 18 inches longer than the height of the silt fence and have the means provided for fastening wire to the fence.

(b) Wire Support Fence - If required, wire support fence shall be at least two inches higher than the height of the silt fence. Horizontal and vertical wires shall be spaced no more than six inches apart. The top and bottom wires shall be at least 10 gauge; all other wires at least 12 gauge.

(c) Fabric - The woven geotextile fabric and components shall be made from polypropylene, polyester, polymide or other chemically stable material and be resistant to ultraviolet radiation degradation for at least 12 months of installation. Silt retention capacity shall be no less than 75 percent. The fabric shall have a Mullen burst test of no less than 260 pounds per square inch with a maximum average sieve opening size of No. 20 to No. 60. Roll width of the fabric shall be no less than six inches wider than the height of the fence, except fabric for boom supported floating silt fence which shall be no less than two feet wider than the design width.

656.03 Temporary Erosion and Sedimentation Control Devices - General

Temporary Erosion Checks - Temporary erosion checks shall be constructed in ditches and at other locations designated. Checks shall be in accordance with the Standard Detail unless otherwise directed.

Baled hay shall be used in other areas as necessary to inhibit soil erosion.

During winter construction, November 1st through April 15th, all areas being constructed within 75 feet of a protected natural resource shall be protected with a double row of silt fence.

Sediment deposits behind haybales and silt fence shall be removed when the depth of sediment reaches 50 percent of the erosion control device height.

The Contractor is also required to have on-site, at all times, 25 percent additional Contract quantities of silt fence for use as backup devices.

656.04 Temporary Erosion and Sedimentation Control Devices – Construction Requirements

1. Erosion Control Filter Berm

The Contractor may opt to furnish and install an erosion control filter berm in lieu of silt fence. The erosion control filter berm shall be a water permeable windrow of a composted bark mix to remove suspended soil particles from water moving off the site. Erosion control filter berm shall be considered an erosion control device. The material and specific application shall be submitted to the Resident for approval.

The erosion control berm shall be placed uncompacted, in a windrow in locations approved by the Resident. The cross section of the berm shall be four feet wide at the base and 1-1/2 feet high at the center. The erosion control filter berm shall be removed when no longer required, as determined by the Resident, and shall be distributed over an adjacent area.

2. Temporary Berms

When designated, temporary barriers shall be constructed along the edge of the embankment. The barriers shall be of embankment earth material, gravel or sand as available and shaped approximately as shown in the Standard Details. The barriers shall be compacted with the wheels of construction equipment. When placed on pavement, the berms shall be constructed of asphalt grindings or other non-erodible soil material as approved by the Resident, and shaped as shown in the Standard Details.

At designated intervals, temporary slope drains shall be constructed with a crescent shaped barrier placed at each slope drain to direct the water into the inlet pipe.

3. Temporary Slope Drains

Collapsible pipe with corrugated metal pipe inlet shall be placed down the embankment slopes at designated locations and in accordance with the Best Management Practices.

At the outlet end of the drain, dumped stone shall be placed to prevent scoring unless otherwise directed.

4. Silt Fence

The silt fence shall be installed downhill of disturbed slopes as shown on the Plans or as approved. The Contractor shall have the option to provide a reinforced filter fabric or an un-reinforced filter fabric attached to a wire fence.

The fence posts shall be spaced as specified by the Resident, however, not to exceed a maximum of eight feet apart when either type of silt fence is used and be driven a minimum of 18 inches into the ground.

The geotextile fabric shall be secured to the post or fence by suitable staples, tie wire or hog rings in such a manner as to prevent tearing and sagging of the fabric. The bottom flap of the geotextile fabric shall be entrenched into the ground a minimum depth of six inches to prevent water from flowing under the fence. The geotextile shall be spliced together only at support posts with a minimum six inches overlap and secure post connection which prevents leakage of silt. The top of the geotextile shall be installed with a reinforced top end section.

The Contractor shall maintain the silt fence in a functional condition at all times. All deficiencies shall be immediately corrected by the Contractor. The Contractor shall make a daily inspection of silt fences in areas where construction activity causes drainage runoff, to ensure that the silt fences are properly located for effectiveness. Where deficiencies exist, additional silt fences shall be installed as approved or otherwise directed.

Sediment deposits shall be removed when sediments reach 50 percent of the height of the device. All sediment deposits remaining in place after the device is no longer required shall be graded to conform to the existing ground, seeded and mulched immediately.

Geotextile fabric which has decomposed or has become ineffective and is still needed shall be replaced with material equal to the original design.

656.05 Temporary Erosion and Sedimentation Control Devices - Maintenance

The erosion control devices will be cleaned, repaired or replaced as necessary. All deficiencies shall be corrected immediately by the Contractor.

656.06 Temporary Erosion and Sedimentation Control Devices - Removing and Disposing

When disturbed areas have been permanently stabilized, temporary erosion control devices, including stone check dams, shall be removed. However, erosion control mix filter berms may be spread out, seeded and left to decompose. Areas disturbed during the removal of the erosion control devices shall be repaired and properly stabilized.

When removed, such devices may be reused in other locations provided they are in good condition and suitable to perform the erosion control for which they are intended. Reused devices, if approved, will be measured for payment.

656.07 Erosion Control Compliance Officer

The Contractor shall designate an Erosion Control Compliance Officer (CECCO) on this Project who shall be a "DEP Certified Contractor" or have had equivalent training approved by the Authority. The Contractor shall provide the Resident with the name of the CECCO and any phone numbers or pager numbers that can be used to contact the person in case of emergency.

Before commencing any work that could disturb soils or impact water quality, the CECCO must field review the Project with the Resident's ECCO (RECCO).

656.08 Inspection and Recordkeeping

The CECCO shall accompany the RECCO in the inspection of all erosion control devices. An inspection log shall be maintained by the Resident for the duration of the Project. The log will include daily on-site precipitation and air temperature as well as the performance, failure and/or any corrective action for all erosion and sedimentation controls in place. The log will be updated at least weekly and after all significant storm runoff or flood events. The log shall be signed by the RECCO and the CECCO after each inspection.

Failure to comply with the erosion and sedimentation control requirements herein or as directed by the RECCO within 24-hours after the violation is noted in the inspection log, will result in the $1,000 per day per violation penalty until the violation is corrected to the satisfaction of the Resident.

656.09 Method of Measurement

Baled hay will be measured for payment by the number of bales or bags satisfactorily placed.

Temporary berms and temporary slope drains will be measured for payment by the linear foot measured parallel with the flow line including the pipe inlet.

Temporary silt fence will be measured by the linear foot along the gradient of the fence, end post to end post.

Erosion control filter berm shall be measured by the linear foot.

The quantity of additional haybales and silt fence material required herein will be measured for payment only when and if they are actually put to use as additional measures on the Project as approved by the Resident. Haybales and silt fence material used for maintenance or replacement of existing devices will not be measured for payment.

The removal of silt and other material from behind the erosion control devices will not be measured separately for payment, but shall be incidental to the Erosion Control items.

656.10 Basis of Payment

The accepted quantity of baled hay will be paid for at the Contract unit price each for each bale which price shall be full compensation for furnishing and placing the bales, for furnishing and driving the stakes for baled hay, for maintaining the bales and stakes, and for the removing and disposing of the bales and stakes when no longer needed.

The accepted quantity of temporary berms will be paid for at the Contract unit price per linear foot of berm which price shall be full compensation for furnishing, placing and compacting material, for maintaining and for removing the berm when no longer needed.

There will be no separate payment for excavation in the construction of temporary erosion control items under this Section and all necessary excavation shall be incidental to the work.

The accepted quantity of temporary silt fence will be paid for at the Contract unit price per linear foot complete in place. Payment shall be full compensation for furnishing, installing, maintaining, replacing deteriorated geotextile and clogged geotextile when required and for removing and disposing of the fence when no longer needed.

The accepted quantity of erosion control filter berm will be paid for at the Contract unit price per linear foot under Item 656.632, 30 Inch Temporary Silt Fence, which price shall be full

compensation for furnishing, placing, maintaining, and removing the erosion control filter berm.

Cost of seeding and mulching the area after removal of the temporary silt fence will be paid for at the Contract unit prices for Item 618, Seeding, and Item 619, Mulch.

Payment will be made under:

Pay Item		Pay Unit
656.50	Baled Hay, in place	Each
656.60	Temporary Berms	Linear Foot
656.62	Temporary Slope Drains	Linear Foot
656.632	30” Temporary Silt Fence	Linear Foot

SPECIAL PROVISION

SECTION 670

SEWERAGE DISPOSAL SYSTEM

The following Section is added:

670.01 Description

This work shall consist of construction of subsurface sewage disposal system with gravity piping to serve the Toll Administration Building. The work shall include furnishing and installing sanitary sewer piping, proprietary-type distribution system (piping, fittings, adapters, etc.), and suitable fill materials. The work shall also include all testing and all other work necessary to complete the construction, all in accordance with these Specifications and as shown on the Plans or as directed by the Resident.

All materials, construction methods and details, and approvals shall conform to these Specifications, the Maine Subsurface Wastewater Disposal Rules, Maine Plumbing Code and all other applicable State and Local Laws and Ordinances.

Before beginning work, the Contractor shall verify that all site conditions and elevations that will have a bearing on the work are as shown on the Plans. If any discrepancies are found, the Contractor shall notify the Resident immediately.

Before any portion of the work can be backfilled, the Contractor shall make arrangements to have the Local Plumbing Inspector inspect the work. Backfilling shall proceed pursuant to approval of the work by the Local Plumbing Inspector.

Coordinate work with that of all other trades affecting, or affected by work of this Section. Cooperate with such trades to assure the steady progress of all Project work.

670.02 Submittals

Shop and working drawing submittals shall include details of all piping, pipe fittings, subsurface disposal system materials, precast concrete structures and details of interfaces, connections, dimensions, layouts and other pertinent data, including:

Certificates of Compliance for all pipe and precast concrete structures

670.03 Pipe and Fittings

Gravity sewer pipe (solid) and fittings shall be four inch PVC conforming to ASTM D1785, Schedule 40. Joints shall be integrally formed bell and spigot type, push-on joints conforming to ASTM D3139 with elastomeric gasket conforming to ASTM F477.

Distribution piping, fittings, and adapters for the sewage disposal field shall be as an approved equal as determined by the Resident and as approved by the Rules.

670.06 Special Fill for Disposal Bed

Soil material needed for fill beneath, above and adjacent to the In-Drain system, including fill extensions, shall be a coarse sand to gravel and meet the requirements of the Maine Subsurface Wastewater Disposal Rules. Crushed stone beneath and adjacent to the chambers as shown on the Plan shall conform to the Rules. The Contractor, prior to bringing the stone and fill material on-site, shall submit a representative five-gallon bucket sample of the disposal bed material to the Resident for approval.

670.07 Insulation

Thermal insulation for the top of the chambers shall be rigid cellular polystyrene in accordance with ASTM C578, Type VII, a minimum two inches thick.

670.08 Bedding Material

Bedding material for pipe and structure subgrades shall be gravel borrow per Subsection 703.20 of the Standard Specifications, except that the largest size particle shall be two inches.

670.09 General Construction

Maintain all excavations in proper condition for carrying on the work, and performing all bailing, draining, or pumping as necessary to keep the excavation free of water.

It shall be the Contractor's responsibility to obtain all necessary permits and pay all fees at no additional cost to the Authority.

Excavation, bracing and sheeting for excavations, dewatering and backfilling shall conform to the requirements of Section 203, Excavation and Embankment, of the Standard Specifications. Trench widths shall be as shown on the Plans. Bedding for the pipes and structures shall be as shown on the Plans and as specified herein.

670.10 Excavation

Excavation for trenches and structures shall be as specified in Section 203, Excavation and Embankment, of the Standard Specifications.

Contractor shall provide adequate bracing and shoring of all excavations in accordance with the requirements of all governing codes and regulations.

All existing piping and structures exposed during excavation shall be adequately supported, braced or otherwise protected during construction activities.

670.11 Backfilling

Backfill and compaction for trenches and structures shall be as specified in Subsection 206.03, Backfilling, of the Standard Specifications.

670.14 Disposal Bed

The disposal bed shall be constructed as detailed on the Plans, as defined by the "Rules". The current Eljen Indrain System shall be removed along with any associated wastewater coated soil. These stripped surfaces shall be rototilled to the satisfaction of the Resident prior to embankment or disposal bed placement. If unsuitable material is encountered and removed at and below the disposal bed surface, granular fill shall be placed and compacted to bring the grade up to the required bed elevation. The Local Plumbing Inspector shall inspect and approve the prepared leaching bed before placement of fill for the disposal bed. Coarse sand to gravel shall be placed below and adjacent to the stone surrounding the chambers as detailed on the Plans.

670.15 Installation of Pipe

Pipe and fittings shall be installed in conformance with ASTM D2321 and as detailed on the drawings and per manufacturer recommendations. Pipe shall be laid on a firm compacted gravel borrow foundation at the line and grade designated. A recess shall be excavated to receive the bell or coupling at each joint if necessary. The piping shall be jointed as specified by the manufacturer to form a watertight joint.

Immediately before laying any pipe, the interior surfaces and ends of sections of pipe shall be cleaned by wiping or other procedure as necessary. All pipe shall be firmly bedded in the underlying soil for its entire length. Joints shall be watertight, adjoining sections of pipe shall form a continuous and smooth invert, spigots shall be fully entered, and the joints shall be slightly flexible. Broken or otherwise damaged pipe shall be replaced at the Contractor's own expense. Pipes shall be kept free of any deposit or debris. The sewer pipe as laid shall be approved by the Resident before any trench is backfilled or embankment is placed.

Any pipe which is not in true alignment, or which shows any settlement after laying, shall be taken up and re-laid without additional cost to the Authority. Any cribbing or subgrade treatment necessary to prevent settlement shall be placed at the Contractor's own expense.

Any damage to the pipe or invert from any cause shall be promptly repaired by the Contractor at his own expense, before backfill is commenced or water passes through the pipe.

Wherever water piping must cross sewer piping, a vertical separation of 18 inches shall be maintained. In no case shall a water pipe cross under a sewer pipe.

670.15 Testing

Testing/acceptance procedures for the sanitary sewer system shall equal or exceed all state and local requirements.

In case leakage exceeds the above specified amount, the Contractor shall locate the leaks and shall repair them at his own expense. Pipelines with shear-type breaks, fishmouths or damaged

gaskets, cracked bells or couplings, hairline fractures, or structural damage of any type shall be replaced in kind. Mechanical sleeve couplings, poured concrete collars or similar repairs are not permitted. The use of pressure grouting repair techniques will not be allowed without the written consent of the Resident.

After repairs have been made, the line shall be re-tested and the process of repairing and re-testing shall be repeated until results within the above specified limits are obtained.

670.16 Method of Measurement

All the Sewerage Disposal System work, including but not necessarily limited to, all labor, components, materials, equipment and incidental work necessary for the satisfactory completion of the system will be measured for payment as a lump sum, complete and accepted.

670.16 Basis of Payment

Payment will be made for the accepted Sewerage Disposal System, including all excavation, bedding material, special fill, pipes, fittings, septic tank, backfill, and associated work at the Contract lump sum price, which price shall be full compensation for all labor, materials, equipment and incidental work necessary for the satisfactory completion of the work.

Loam, seed and mulch placed on the completed and accepted sewage disposal system will be paid under their respective pay items.

Payment will be made under:

Pay Item		Pay Unit
670.01	Sewerage Disposal Replacement System	Lump Sum

SPECIAL PROVISION

SECTION 719

SIGNING MATERIAL

Delete Section 719.01 Reflective Sheeting and replace with the following:

Section 719.01 Reflective Sheeting

All Reflective Sheeting shall be manufactured by 3M.

Reflective sheeting for all signs shall meet at a minimum the requirements for, ASTM 4956 – Type XI (Full cubed).

Reflective sheeting, used in sign construction, shall have been manufactured within the six months immediately prior to the fabrication of each sign. Upon delivery at the job site of each shipment of signs, a letter of certification shall be provided that the reflective sheeting conforms to the requirements.

For Type 1 Guide Signs, all reflective sheeting shall be color matched on each sign unit.

All warning signs shall be fluorescent yellow except for Ramp Advisory Speed signs which shall be yellow. Yellow on Type 1 Guide Signs shall be Yellow.

All Construction Series signs shall be fluorescent orange.

All Pedestrian Signs shall be fluorescent yellow-green.

EZ-PASS Purple shall conform to the FHWA Purple color block.

Delete Section 719.02 Demountable High Intensity Reflectorized Letters, Numerals, Symbols, and Borders and replace with the following:

719.02 Direct Applied Reflectorized Letters, Numerals, Symbols, and Borders Direct Applied reflectorized letters, numerals, symbols and borders shall consist of cut out sheeting shall meet at a minimum the requirements for ASTM 4956 – Type XI sheeting.

All Type 1 Guide Signs shall meet at a minimum the requirements for ASTM 4956 –Type XI(Full Cubed) sheeting.

SPECIAL PROVISION

SECTION 800

(Electrical Demolition)

800.11 Description

This work shall consist of furnishing and installing materials and components to remove conduit, wires, wireways, cables, outlets, panels, lighting, overhead canopy lighting and all other related electrical equipment show in the plans. Work shall be completed in a phased manner.

The Contractor shall adhere to lockout/tagout procedures noted in the General Provisions. All electrical systems shall remain operational unless noted in the plans.

Both dirty and clean power are available in the toll plaza. The Contractor shall take care to maintain both power sources and clearly delineate both in the electrical demolition plan.

Work shall include contractor submitting a demolition plan noting the sequence of electrical demolition to the Resident for approval prior to beginning demolition work. Electrical demolition work will occur during all phases. The Contractor shall coordinate installation of proposed work and electrical demolition.

Abandoned wireways, junction boxes, conduit identified to remain shall be tagged or capped as appropriate.

The work in this item generally includes, but is not limited to demolition and removal of, or portions thereof, the following:

a. Toll Booths and Toll Islands: Associated electrical, communication systems, and structural components as noted on the plans, *including but not limited to:* booth power, bumper mounted flashing beacons, switches, wiring, conduits, junction boxes, electrical outlets, pulleys, cables, controllers, communication lines, talk boxes, hangers, posts, and braces.
b. Canopy: Associated electrical, communication systems, and related structural components, *including but not limited to* canopy lane lighting, canopy mounted red/green lights, canopy mounted sign lighting, heat tapes, portions of the lightning suppression system, overhead sensors and AVI antennas.
c. Salvaged Items: Certain items shall be salvaged and delivered to various locations as noted in the Plans.

800. 12 Basis of Payment

Payment to be made as lump sum for all electrical demolition required including the delivery of specified items noted in the Plans. All labor and materials required will be incidental to this item.

Payment will be made under:

Pay Item		Pay Unit
800.10	Electrical Demolition	Lump Sum

SPECIAL PROVISIONS

DIVISION 800

(Temporary Power and Communication Relocation)

800.01 Description

This work shall consist of furnishing and installing materials and components to install and modify the primary and secondary power lines and communications lines for the Falmouth toll plaza as shown on the plans or described herein. Work shall be completed in a phased manner during Phases 1a and 3. The following work in this item generally includes, but is not limited to the following:

During Construction Phase 1a: The Contractor shall install two new temporary service pole and install temporary overhead power and communications lines as shown on the plans. The Contractor shall submit for review and approval a power and communications transfer plan that will outline the steps to transfer the existing power and communications to the temporary service. This plan will include a listing of coordination efforts and an estimated time for transfer. The new temporary power and communications services shall be switch over once all needed coordination with the utilities, MTA and Resident Engineer has been completed and the power and communications transfer plan has been approved.

During Construction Phase 3: The Contactor shall submit for review and approval a power and communications transfer plan that will outline the steps to transfer the temporary power and communications to the newly installed power and communication services. This plan will include a listing of coordination efforts and an estimated time for transfer. The transfer to the newly installed power and communication services shall occur once all needed coordination with the utilities, MTA and Resident Engineer has been completed and the power and communications transfer plan has been approved.

800.02 Method of Measurement

The temporary power and communication relocation will be measured for payment as one lump sum unit, complete, and accepted.

800.03 Basis of Payment

The accepted work for temporary power and communication relocation will be paid for at the Contract Lump Sum price. All labor and materials required will be incidental to this item.

Payment will be made under:

Pay Item		Pay Unit
800.15	Temporary Power Communication Relocation	Lump Sum

SPECIAL PROVISION

SECTION 800

(Mechanical Demolition)

800.21 Description

This work shall consist of removing mechanical systems as well as all other related mechanical equipment shown in the Plans. Work shall be completed in a phased manner.

Contractor shall adhere to lockout/tagout procedures noted in the General Provisions.

This item generally includes, but is not limited to demolition and removal of, or portions thereof, the following:

a. Toll Booths and Toll Islands: Associated mechanical and control systems and structural components, *including but not limited to* booth heaters, hot water supply and return piping, valves, rollers, framing, bracing, actuators, thermostats, controllers, talk boxes, and hangers.

b. Includes disconnection and removal of existing heating units in remaining eastbound booths

Work shall include Contractor submitting a demolition plan noting the sequence of mechanical demolition to the Resident for approval prior to beginning demolition work. Mechanical demolition work will occur during all Phases. Contractor shall coordinate installation of proposed work and mechanical demolition.

800.22 Basis of Payment

Payment to be made as lump sum for all mechanical demolition required. All labor and materials required will be incidental to this item.

Payment will be made under:

Pay Item		Pay Unit
800.20	Mechanical Demolition	Lump Sum

SPECIAL PROVISION

SECTION 800

MISCELLANEOUS INCIDENTALS

(HVAC Tunnel and Booths)

800.23 Description

This work shall consist of furnishing and installing materials and components for all mechanical, control and HVAC systems as well as all other related mechanical equipment described in the Plans and Specifications.

The contractor shall perform site visit(s) as needed prior to bid preparation to familiarize with and/or field verify the existing conditions to the extent that all incidental work required to complete the project scope is included in the base bid. The contractor shall also review the plans of the existing Toll Plaza Facility.

The work in this item generally includes, but is not limited to installation of, or portions thereof, the following:

a. Toll Booths: Associated HVAC system and components, including but not limited to heaters, vents, piping, valves, rollers, framing, bracing, actuators, thermostats, controllers, duct work, bi-lateral vents / dampers and hangers.

b. Tunnel: Mechanical and HVAC system components associated with toll booths, booth islands and canopy including but not limited to all mechanical supports, HVAC mechanical components, duct work, actuators, valves, dampers, heating coils, vents, control system components, and thermostats.

Mechanical, HVAC, and plumbing work is included in this item and is shown on the Plan drawings. Any subsidiary structural and/or architectural work required to complete the mechanical, HVAC, or plumbing work as shown or noted on the respective drawings shall be incidental to this pay item.

800.24 Basis of Payment

Payment to be made as lump sum for all HVAC for the tunnel and booths required as noted in the Plans. All labor and materials required will be incidental to this item.

Payment will be made under:

Pay Item		Pay Unit
800.22	HVAC Tunnel and Booths	Lump Sum

SPECIAL PROVISION

SECTION 800

MISCELLANEOUS INCIDENTALS

(Toll Plaza Facility Demolition and Restoration)

800.31 Description

This work shall consist of furnishing and installing materials and components to demolish and modify the toll plaza as shown on the plans or described herein. Work shall be completed in a phased manner during Phases 2-4. The following work in this item generally includes, but is not limited to the following:

1. Newly exposed ends of the canopy shall be reconstructed to a finished fascia as shown in the plans.
2. The Contractor shall reseal all roof system seams of remaining portions of the canopy.
3. All work on the canopy roof system shall be performed by the roofing systems product manufacture's certified installer.
4. The Contractor shall remove signs, flashing beacons and all related toll equipment mounted to concrete toll plaza islands, canopy columns and booths and shall deliver all salvaged items as directed by the Resident and Toll Systems Manager to the Maine Turnpike Sign Shop at Mile Marker 58.3, NB.
5. Remove and reset the canopy mounted signs during construction phases as need to match the cash and EZ Pass layout in the phasing plans. Any needed signs shall be provided by the Turnpike and picked up the at the Turnpike sign shop.
6. All equipment except loops required to reverse tolling in lane 3 shall be removed and given to TransCore for reuse.

Items not included in this item are:

1. Removal of canopy mounted signs and luminaires will be paid under Item 645.107 and 645.109.
2. Removal of concrete toll islands, and bumpers, will be paid under Item 202.17 Removing Existing Structural Concrete.
3. Removal of mechanical and electrical components will be paid under Items 800.10 Electrical Demolition and 800.20 Mechanical Demolition.

The Contractor shall ensure that traffic will be protected from debris and construction operations. Care shall be taken not to damage existing toll booths, electrical and mechanical systems.

800.32 Construction Requirements

Construction requirements shall be in accordance with National Electric Code (latest version), International Building Code (latest Version), ASTM standards (latest version), or best industry standards and practices when not addressed in any of the above references.

800.33 Materials

All material proposed by the Contractor to be used in the restoration of the toll plaza shall be submitted to the Resident for approval prior to the start of the demolition work.

800.34 Method of Measurement

The toll plaza facility demolition and restoration will be measured for payment as one lump sum unit, complete, and accepted.

800.35 Basis of Payment

The accepted quantity of Toll Plaza Facility Demolition and Restoration will be paid for at the Contract lump sum price. All labor and materials required will be incidental to this item.

Payment will be made under:

Pay Item		Pay Unit
800.30	Toll Plaza Demolition and Restoration	Lump Sum

SPECIAL PROVISION

SECTION 800

MISCELLANEOUS INCIDENTALS

(Temporary Parking Lot)

800.36 Description

This work consists of excavation, furnishing and installing aggregate subbase course – gravel and asphalt grindings to establish a temporary employee parking lot for phase 1A and restoring the area upon construction completion. This temporary lot shall be used by Turnpike employees only during this phase.

Upon completion of phase 1A, Turnpike employee parking shall shift to the newly constructed lot west of the plaza. Phase 1B construction per Plans will remove a portion of the temporary lot for roadway widening. The remaining portion of the lot may be used by the Contractor as a laydown area for the remainder of the project. Prior to the completion of the Contract the remaining grindings and gravel shall be removed, and the area returned to its original condition.

800.37 Materials

Asphalt Grindings

The grindings shall be reprocessed (crushed) to meet the following gradation:

Sieve Designation	Grading
3/4”	100
1/2”	95-100
No.4	50-80
No.50	18-28
No. 200	3-10

Aggregate Subbase Course-Gravel

Aggregate subbase course-gravel shall be material meeting the requirements of Subsection 703.06.

800.38 Construction Requirements

The asphalt grindings shall be placed and compacted to a minimum thickness of three inches unless otherwise designated by the Resident.

800.39 Basis of Payment

Payment to be made as lump sum for the installation of the temporary parking lot and the removal of the remainder of the temporary parking lot upon completion of the contract to the satisfaction of the Resident. All labor and materials required will be incidental to this item.

Payment will be made under:

Pay Item		Pay Unit
800.31	Temporary Parking Lot	Lump Sum

SPECIAL PROVISIONS

DIVISION 800

MISCELLANEOUS INCIDENTALS

(Tunnel Enclosures)

800.01 Description

The work shall consist of furnishing and installing materials and components as needed to provide the completed tunnel entrances for both the north and south tunnel access points for the proposed tunnel at the Falmouth toll plaza as shown on the plans or described herein. The work shall be completed in a phased manner during Phases 1b and 3. The following work in this item generally includes, but is not limited to the following:

During Construction Phase 1b: The Contractor shall install all architectural finishes to the precast concrete shell above grade for the north tunnel entrance as per the plans and specifications.

During Construction Phase 3: The Contactor shall install the architectural enclosure to the cast-in-place concrete walls above grade for the south tunnel entrance as per the plans and specifications.

800.02 Method of Measurement

The tunnel enclosures will be measured for payment as one lump sum unit, complete, and accepted.

800.03 Basis of Payment

Payment will be made for work completed and accepted for tunnel enclosures at the Contract Lump Sum price. All labor and materials required will be incidental to this item.

Payment will be made under:

Pay Item		Pay Unit
800.40	Tunnel Enclosures	Lump Sum

SPECIAL PROVISIONS

DIVISION 800

MISCELLANEOUS INCIDENTALS

(New Westbound Toll Booths and Canopy)

800.01 Description

Division 800 specifies materials, procedures and requirements for the construction of the Toll Facilities, comprised of: toll booths and canopies and all associated utilities and services within the limits shown on the Drawings. The work shall be phased as noted on the Plans and outlined in the Specification.

Toll Booth and Canopy construction includes, but is not limited to the following:

1. Pick up, transport and installation of two (2) toll booths complete with aluminum subframes, floors, doors, windows, counters, etc. Caulking and sealing of booths to concrete is part of the installation. Weather-stripping to be furnished by others.

2. Fabrication and erection of toll canopy structure complete, including decking, roofing, steel columns, fascia, drain lines, and horizontal canopy sign supports, etc.

3. EPDM Roofing System Installation: The installation of the new canopy roof will included EPDM roofing material.

4. Furnishing and installing plumbing, heating, ventilating, communications and electrical work in the toll booths and canopy as detailed on the Plans.

5. Furnishing and installing one fixed canopy sign supports, relocating one fixed canopy sign support and sign and relocating sign lights. Canopy signs and the installation thereof are not part of the work of Division 800, but are specified elsewhere in the Contract Documents.

6. Installation of reset canopy mounted lights for the new Lanes 1 and 2 shall be provided by others and picked up the at the MTA sign shop.

7. Also includes Tunnel light fixtures and outside stair lights as detailed in the Plans.

8. Cutting, patching and sealing as required to complete the work per Plans and Specifications.

9. The Contractor shall submit a cost breakdown of the major components of work for the Toll Booths and Canopy to be approved by the Engineer. This breakdown will be used as a basis for the monthly pay estimates.

All material associated with Toll Booths and Canopy installation is included in this item and is shown on the Plan drawings and described in this Special Provision. Electrical and communication items associated with the toll system will be paid for under the specific item.

800.02 Method of Measurement

The Toll Booths and Canopy construction will be measured for payment by the lump sum, complete, in-place for the Toll Booths and Canopy.

The MTA will supply the toll booth for installation in Lanes 1 and 2. The contractor shall transport toll booth from Authority's Sign Shop Facility Mile 58.3 northbound. The installation will include all electrical, mechanical and toll systems required as described in the Plans and within this specification, and all labor, material and equipment needed to provide a fully functioning toll booth will be incidental to this item.

The contractor shall install a new canopy over Lanes 1 and 2 as shown in the plan drawings and described within these specifications. The canopy installation shall include shop painted structural steel, EPDM roofing system, and all electrical and toll systems remounted or re-routed, reinstallation of canopy sign support and canopy signs and all material labor and equipment needed to provide the completed canopy.

800.03 Basis of Payment

Toll Booths and Canopy will be paid for at the lump sum price bid which shall be full compensation for the cost of furnishing all materials, equipment, supplies, tools, incidentals, and labor and supervision necessary to satisfactorily complete all work prescribed in Division 800 of these Special Provisions.

Payment will be made under:

Pay Item		Pay Unit
800.50	New Westbound Toll Booths and Canopy	Lump Sum

MAINE TURNPIKE AUTHORITY

SPECIFICATIONS

PART III – DIVISION 800

SECTION 04050

UNIT MASONRY, GENERAL

PART 1 - GENERAL

1.01 RELATED DOCUMENTS

A. Drawings, Contract Conditions all other Technical Specifications Sections apply to work of this Section insofar as applicable.

B. Coordinate work with that of all other trades affecting, or affected by work of this Section. Cooperate with such trades to assure the steady progress of all Project work.

1.02 DESCRIPTION

A. The location of each type of unit masonry work is shown on the Drawings. In general, the work includes the following:

1. Brick facing and precast concrete sills.
2. All ties, reinforcement and anchors required for securing all masonry work together and to adjacent work, except as otherwise specified.
3. All through-wall metal and fabric flashing.
4. Rigid cavity wall insulation and cavity masonry drainage material.
5. Setting and/or building in all flashing, frames, windows, blocking, loose steel lintels, plates, anchors, bolts, ties, sleeves, door and frame, access doors, and all other items requiring building into work of this section.
6. Cutting and patching of work in this section as required for the work of other sections.
7. Cleaning and pointing.
8. Submission of samples and shop drawings as specified or otherwise requested by the Engineer.
9. Construction of one sample masonry panel for each type of masonry to be used, for Engineer's approval. Each panel will measure approximately 4'-0" x 4'-0".

B. Masonry Mortar and Grout are specified in Section 04100.

C. Masonry Accessories are specified in Section 04150.

D. Brick Masonry is specified in Section 04210.

1.03 QUALITY ASSURANCE

A. Comply with provisions of following codes, specifications and standards, except as otherwise indicated.

1. "BIA Technical Notes on Brick Construction", except as herein modified.
2. "Building Code Requirements for Engineered Brick Masonry" from the "BIA Technical Notes".

3. ACI 531 "Building Code Requirements for Concrete Masonry Structures".
4. ACI 531.1 "Specification for Concrete Masonry Construction".
5. ANSI/NBS H74 (A41.2) "Building Code Requirements for Reinforced Masonry".
6. ANSI/NBS 211 (A41.1) "Building Code Requirements for Masonry".

Where provisions of above codes and standards conflict with building regulations in effect for this Project, the building regulations will govern, but only to establish minimum requirements.

B. Coordination:

Review installation procedures and coordinate with other work that must be integrated with masonry.

C. Test for Masonry Materials:

Test prisms of materials in accordance with ASTM Standard E 447. The fully grouted prism strength shall be greater than 2700 psi.

Not less than three specimens shall be made for each initial preliminary test.
Not less than three shall be made for each field test to confirm that the materials are as assumed in the design. The standard age of test specimens shall be 28 days, but seven-day tests may be used provided the relationship between the seven-day and 28-day strengths of the masonry is established by adequate data for the materials used.

Make at least three field tests during construction. Test specimen for grout shall be field formed in accordance with UBC Standard No. 24-22 (NCMA TEK 23A). The compressive strength of grout shall be determined by testing field formed specimen in a damp condition in accordance with applicable provisions of ASTM C 39.

D. Construction Tolerances:

1. Variation from Plumb: For vertical lines and surfaces of columns, walls and arises do not exceed 1/4 inch in 10 feet or one story.
2. Variation from Level: For lines of exposed lintels, sills, parapets, horizontal grooves and other conspicuous lines, do not exceed 1/4 inch in any bay or 20 feet maximum, nor 3/4 inch in 40 feet or more.
3. Variation of Linear Building Line: For position shown in plan and related portion of columns, walls and partitions, do not exceed 1/2 inch in any bay or 20 feet maximum, nor 3/4 inch in 40 feet or more.
4. Variation in Cross-Sectional Dimensions: For columns and thickness of walls do not exceed minus 1/4 inch nor plus 1/2 inch from dimensions shown.

E. Job Mock-Up:

Prior to installation of masonry work, erect a sample wall panel mock-up using materials, bond and joint tooling required for final work. Provide special features as

directed for sealant and contiguous work. Build mock-up at the site, where directed, parallel to finished wall of the building, of full thickness and approximately 4 feet long by 4 feet high, indicating the proposed range of color, texture and workmanship to be expected in the completed work, as well as sealants, flashing, insulation, ties, reinforcing, etc. Obtain the Engineer's acceptance of visual qualities of the mock-up before start of masonry work. Retain mock-up during construction as a standard for judging completed masonry work. Do not alter, move or destroy mock-up until work is completed.

1.04 JOB CONDITIONS

A. Materials Protection:

Protect masonry materials during storage and construction from wetting by rain, snow or groundwater and from soiling or inter-mixture with earth and other materials.

Do not use metal reinforcing or ties having loose rust or other coatings, including ice, which will reduce or destroy bond.

Protect grout and mortar materials from deterioration by moisture and temperature. Store in a dry location or in waterproof containers. Keep containers tightly closed and away from open flames. Protect liquid components from freezing. Comply with manufacturer's recommendations for minimum and maximum temperature requirements for storage.

B. Protection of Work:

During erection, cover top of wall with heavy waterproof sheeting at end of each day's work. Cover partially completed structures when work is not in progress. Extend cover a minimum of 24 inches down both sides and hold cover securely in place. Protect base of walls from rain-splashed mud and mortar splatter by means of coverings spread on ground and over wall surface.

Do not apply uniform floor or roof loading for at least 12 hours after building masonry walls or columns. Do not apply concentrated loads for at least 3 days after building masonry walls or columns.

Prevent grout or mortar from staining the face of masonry to be left exposed or painted. Immediately remove grout and mortar in contact with such masonry. Protect sills, ledges and projections from droppings of mortar and other materials.

Take special care to keep the cavity between unit masonry wythe and backup material free of buildup which will act as a bridge for water penetration through the wall construction. Constant monitoring of this area shall be required to ensure that the bottom of the cavity does not fill with mortar droppings and that there is no mortar or other buildup between face wythe and backup construction. Method for preventing mortar droppings within the cavity shall be demonstrated for, and approved by, the Engineer.

C. Cold Weather Protection:

Remove all ice or snow formed on masonry bed by carefully applying heat until the top surface is dry to the touch. Remove all masonry determined to be frozen or damaged by freezing conditions.

D. Procedures Required During Construction:

Perform the following construction procedures while the work is progressing. When the outside temperature falls below 40°F during construction the temperature of the mortar shall be within a range of 70°F and a maximum of 120°F after all ingredients have been combined. The following construction requirements shall be followed to obtain the required mortar temperature.

When the outside air temperature is:

From 40°F to 32°F:	Heat mixing water or sand to a minimum of 70°F and a maximum of 160°F.
From 32°F to 25°F:	Heat sand and water to a minimum of 70°F and a maximum of 160°F, maintain temperature of mortar on boards above freezing.
25°F and below:	Heat sand and mixing water to a minimum of 70°F and maximum of 160°F; provide enclosures and auxiliary heat to maintain air temperature above 32°F; do not lay units which have a temperature of less than 20°F. Units shall be heated to about 40°F to prevent sudden cooling of the heated mortar.

E. Procedures Required for Completed Masonry:

Perform the following for protection of completed masonry and masonry not being worked on.

When mean daily air temperature is:

From 40°F to 32°F:	Protect masonry from rain or snow for at least 48 hours by covering with weather-resistive membrane.
From 32°F to 25°F:	Completely cover masonry with weather-resistive membrane for at least 48 hours.
25°F and below:	Maintain masonry temperature above 32°F for 48 hours using enclosures and supplementary heat, electric heating blankets, infrared lamps, or other acceptable methods.

PART 2 - MATERIALS

2.01 GENERAL

Refer to other sections of Division 4 for required masonry mortar, grout, masonry accessories, masonry units, face brick, and installation methods.

PART 3 - EXECUTION

3.01 INSPECTION:

Contractor must examine the areas and conditions under which unit masonry work is to be installed and notify the Authority's representative in writing of conditions detrimental to the proper and timely completion of the work. Do not proceed with the work until unsatisfactory conditions have been corrected in an acceptable manner.

3.02 PREPARATION

Except for absorbent units specified to be wetted by the manufacturer and approved by the Engineer, lay masonry units surface dry and adjust mortar mix to conform to the degree of water absorption for the individual masonry unit. Do not wet concrete masonry units. Use wetting methods which ensure that each masonry unit (except concrete masonry units) is nearly saturated but surface dry when laid.

3.03 INSTALLATION, GENERAL

Build cavity walls, composite walls, and other masonry construction to the full thicknesses shown. Build single-wythe walls to the actual thickness of the masonry units, using units of nominal thickness indicated.

Leave openings for equipment to be installed before completion of masonry work. After installation of equipment, complete masonry work to match work immediately adjacent to the opening.

Cut masonry units using appropriate motor-driven masonry saws to provide clean, sharp, un-chipped edges. Cut units as required to provide pattern shown and to fit adjoining work neatly. Use full-size units without cutting wherever possible.

3.04 LAYING MASONRY WALLS

A. Mortar Types:

Unless otherwise indicated, use mortar as specified in Section 04100, "Masonry Mortar and Grout".

B. Batch Control:

Measure and batch materials by weight such that the required proportions for mortar can be accurately controlled and maintained. It is recommended that all batch

materials be prepackaged to ensure consistency of proportions in the mortar mix. Measurement of sand by shovel will not be permitted.

Mix mortars with the minimum amount of water consistent with workability to provide maximum bond strength of the mortar.

Do not use mortar which has begun to set or if more than 2 hours has elapsed since initial mixing. Re-temper mortar during the 2 hour period only as required to restore workability.

Layout walls in advance for accurate spacing of surface bond patterns with uniform joint widths and to properly locate openings, movement-type joints, returns and offsets. Avoid the use of less-than-half-size units at corners, jambs and wherever possible at other locations.

Lay-up walls plumb and true to comply with specified tolerances, with courses level, accurately spaced and coordinated with other work.

C. Pattern Bond:

Lay exposed masonry in the bond patterns indicated. Lay concealed masonry with all units in a wythe in running bond. Bond and interlock each course of each wythe at corners. Do not use units with less than 4 inch horizontal face dimensions at corners or jambs.

D. Mortar Bedding and Jointing:

To ensure that the cavities of walls are kept clean from mortar droppings, all bed joints adjacent to the cavity shall be beveled.

Lay solid brick size masonry units with completely filled bed and head joints; butter ends with sufficient mortar to fill head joints and shove into place. Do not slush head joints.

Maintain joint widths shown, except for minor variations required to maintain bond alignment. If not shown, lay walls with 3/8 inch joints. Rake out mortar in preparation for application of sealants where shown and directed.

Cut joints flush for masonry walls which are to be concealed or to be covered by other materials, unless otherwise indicated.

Tool exposed joints slightly concave unless otherwise indicated.

Remove masonry units disturbed after laying; clean and reset in fresh mortar. Do not pound corners to fit stretcher units which have been set in position. If adjustments are required, remove units, clean off mortar and reset in fresh mortar.

E. Collar Joints:

Where shown, fill the vertical longitudinal joint between wythes solidly with mortar by parging the in-place wythe and shoving units into the parging.

F. Stopping and Resuming Work:

Rack back 1/2-unit length in each course; do not tooth. Clean exposed surfaces of set masonry, wet units lightly (if required) and remove loose masonry units and mortar prior to laying fresh masonry.

G. Built-in Work:

As the work progresses, “build-in” items specified under this and other sections of these specifications. Fill in solidly with masonry around built-in items.

Fill space between hollow metal frames and masonry solid with mortar.

Where built-in items are to be embedded in cores of hollow masonry units, place a layer of metal screen lath in the joint two courses below the affected cell or cells, and rod grout into cores for four courses.

H. Horizontal Joint Reinforcing:

Refer to Section 04150 "Masonry Accessories" for type of materials required.

Provide continuous horizontal joint reinforcing as shown and specified. Fully embed longitudinal side rods in mortar for their entire length with a minimum cover of 5/8 inch on exterior side of walls and 1/2 inch on interior side of walls. Lap reinforcement a minimum of 6 inches at ends of units. Do not bridge control and expansion joints with reinforcing.

In single-wythe and multi-wythe walls (solid or cavity) where continuous horizontal reinforcing also acts as structural bond or tie between wythes, space reinforcing as required by code but not more than 16 inches on center vertically.

Reinforce masonry openings greater than 1'-0" wide, with horizontal joint reinforcing placed in 2 horizontal joints approximately 8 inches apart, immediately above the lintel and immediately below the sill. Extend reinforcing a minimum at 2'-0" beyond jambs of the opening, bridging control joints only where indicated.

I. Corners:

Provide interlocking masonry unit bond in each course at corners, unless otherwise shown.

For horizontally reinforced masonry, provide continuity at corners with prefabricated "L" units, in addition to masonry bonding.

J. Intersecting and Abutting Walls:

Unless vertical expansion or control joints are shown at juncture, provide same type of bonding specified for structural bonding between wythes and provide continuity with horizontal joint reinforcing using prefabricated "T" units.

L. Cavity Walls:

Keep cavity clean of mortar droppings and other materials during construction. Strike joints facing cavity flush.

Tie exterior wythe to back-up with truss type ties embedded in mortar joints. Refer to Section 04150 "Masonry Accessories" for type of ties required.

M. Anchoring Masonry Work:

Provide anchoring devices of the type shown and as specified under Section 04150 "Masonry Accessories". If not shown or specified, assume that anchoring devices are required and request a clarification from the Engineer before commencing masonry work.

Anchor masonry to structural members where masonry abuts or faces such members to comply with the following:

Provide an open space not less than 1 inch in width between masonry and structural member, unless otherwise shown. Keep open space free of mortar and other rigid materials.

Anchor masonry to structural members with metal ties embedded in masonry joints and attached to structure. Provide anchors with flexible tie sections, unless otherwise shown.

Anchor concrete masonry units to concrete back-up with dovetail anchors.

N. Expansion Joints for Exterior Brick Masonry:

Provide vertical expansion and isolation joints in brick masonry where shown. Build-in related items as the masonry work progresses. Refer to Section 07900, Joint Sealers.

O. Lintels:

Provide steel lintels where shown, in accordance with Section 05500, Metal Fabrications.

Provide concrete reinforced lintels where shown in accordance with Section 03300, Concrete Work.

Provide minimum bearing at each jamb of 4 inches for openings less than 6'-0" wide; 8 inches for wider openings.

P. Flashing of Masonry Work:

Provide concealed flashings in masonry work at obstructions to the downward flow of water in the wall so as to divert such water to the exterior. Concealed flashings shall be provided at, but not be limited to, the following locations:

- Wall base, continuous and above finish grade.
- Window sills.
- Above steel lintels, relief angles and shelf angles.
- Projections, recesses and caps.
- Top of walls.

Prepare masonry surfaces to be smooth and free from projections which could puncture flashing. Seal penetrations in flashing with approved mastic. Extend flashings the full length of lintels and shelf angles and minimum of 4 inches into masonry at each end. Extend flashing from 4 inches beyond exterior face of masonry, through the outer wythe, turned up a minimum of 4 inches, and through the inner wythe to within 1/2 inch of the interior face of the wall in exposed work. Where interior surface of inner wythe is concealed by furring, carry flashing completely through the inner wythe and turn up approximately 2 inches and adhere to face of interior wythe.

Where inter-backup is other than masonry, install flashing to conform to profile of shelf angle and extend a minimum of 8 inches up (and adhere to) the backup material.

Lap ends of flashings by overlapping a minimum of 6 inches and seal lap with mastic recommended by manufacturer.

Provide 8 inch high end dams at the termination of all non-continuous flashings. Also provide continuous vertical flashings at all wall openings.

Install elastic flashings in accordance with manufacturer's instructions.

Provide cotton rope weep holes in the head joints of the first course of masonry immediately above all concealed flashings. Space 24 inches on center, unless otherwise indicated. Provide 1/4 inch diameter cotton rope weeps, returned 12 inches up back-up wall. Take care not to cover weeps with sealant or mortar.

Install nailers for flashing and other related work where shown to be built into masonry work.

3.05 REPAIR, POINTING AND CLEANING

A. Remove and replace masonry units which are loose, chipped, broken, stained or otherwise damaged, or if units do not match adjoining units as intended. Provide new

units to match adjoining units and install in fresh mortar or grout, pointed to eliminate evidence of replacement.

B. Pointing:

During the tooling of joints, enlarge voids and holes, except weep holes, and completely fill with mortar.

Point-up all joints including corners, openings and adjacent work to provide a neat, uniform appearance, and where required, properly prepared for application of sealant.

C. Cleaning Exposed, Unglazed Masonry Surfaces:

Wipe off excess mortar as the work progresses. Dry brush at the end of each day's work.

D. Final Cleaning:

After mortar is thoroughly set and cured, clean 1/2 of sample wall panel as follows. Obtain Engineer's acceptance of sample cleaning before proceeding to clean masonry work.

Dry clean to remove large particles of mortar using wood paddles and scrapers. Use chisel or wire brush if required and approved.

Presoak wall by saturating with water and flush off loose mortar and dirt. Scrub down wall with stiff bristle brushes and water mixed with the appropriate amount of one of the following masonry cleaners:

1. Vana-trol by Prosoco Inc.
2. Light duty Concrete Cleaner by Prosoco Inc.

Rinse walls using clean, pressurized water, to neutralize cleaning solution and remove loose material. Acid cleaning of masonry will not be permitted.

Protect non-masonry surfaces from damage as necessary during cleaning operations. Restore all items so damaged to a like-new condition acceptable to the Engineer at no additional cost.

E. Protection:

Protect the masonry work from deterioration, discoloration and other damage during subsequent construction operations.

END OF SECTION

SECTION 04100

MASONRY MORTAR AND GROUT

PART 1 - GENERAL

1.01 RELATED DOCUMENTS

A. Examine Drawings, Contract Conditions all other Sections of the Specifications for requirements which affect work of this Section whether or not such work is specifically mentioned in this Section.

B. Coordinate work with that of all other trades affecting, or affected by work of this Section. Cooperate with such trades to assure the steady progress of all Project work.

1.02 DESCRIPTION

Masonry mortar for brick masonry unit is specified in this section.

1.03 QUALITY ASSURANCE

Do not change source or brands of masonry mortar materials during the course of the work.

1.04 SUBMITTALS

A. Manufacturer's Data:

Submit eight (8) copies of manufacturers' specifications and instructions for each manufactured product.

B. Samples:

Submit samples of each type of colored masonry mortar, showing the range of color which can be expected in the finished work. Label samples to indicate type and amount of colorant used. Engineer's review will be for color only. Compliance with all other requirements is exclusively the responsibility of the Contractor.

PART 2 - MATERIALS

2.01 MATERIALS

A. Portland Cement: ASTM C 150, Type I, non-staining, without air entrainment and of natural color or white as required to produce the required color of mortar or grout.

B. Hydrated Lime: ASTM C 207, Type S.

C. Aggregates for Mortar: ASTM C 144, except for joints less than 1/4 inch use aggregate graded with 100% passing the No. 16 sieve.

D. Aggregate for Grout: ASTM C 404.

E. Water: Clean, potable, free of deleterious materials which would impair strength or bond.

F. Colored Mortar Pigments: Natural and synthetic iron oxides and chromium oxides, compounded for use in mortar mixes. Use only pigments with record of satisfactory performance in masonry mortars. Do not exceed pigment-to-cement ratio, by weight, of 1-to-7. Subject to compliance with requirements, colored mortar pigments which may be incorporated in the work include, but are not limited to, the following:

1. Solomon Grind-Chem Services, Inc.; "SGS Mortar Colors".
2. Davis Colors, A Subsidiary of Rockwood Industries, Inc.; "True Tone Mortar Colors".
3. Similar colors manufactured by Bonsol Construction Products or Riverton Lime and Stone Co. are acceptable.

2.02 MORTAR MIXES

A. Do not lower the freezing point of mortar by use of admixtures or antifreeze agents.

B. Do not use masonry cement.

C. Do not use calcium chloride or other antifreeze compounds in mortar or grout.

D. Mortar for Unit Masonry (Proportion by Volume Method):

Non-staining, cement-lime mortar complying with ASTM C 270, "Table 1, Proportion Specification Requirements", but limiting acceptable types to those listed below for cement-lime mixes.

1. Type M: 1/4 part lime per part of Portland Cement.
2. Type S: Over 1/4 up to 1/2 part lime per part of Portland Cement.

E. Use the following mortar mix for the applications indicated.

1. Use Type M mortar for masonry below grade and in contact with earth.
2. Use Type S mortar for other applications.

F. Colored Pigmented Cement Mortar:

Proportion pigments with other ingredients to match sample approved by the Engineer.

2.03 GROUT MIX

Portland cement, sand, gravel and water, proportioned as required to provide a 28-day minimum compressive strength of 2500 psi.

PART 3 - EXECUTION

3.01 Refer to Section 04050, "Unit Masonry, General" for required installation procedures of mortar and grout specified in this section.

END OF SECTION

SECTION 04150

MASONRY ACCESSORIES

PART 1 - GENERAL

1.01 RELATED DOCUMENTS

A. Drawings, Contract Conditions other Technical Specifications Sections apply to work of this Section insofar as applicable.

B. Coordinate work with that of all other trades affecting, or affected by work of this Section. Cooperate with such trades to assure the steady progress of all Project work.

1.02 DESCRIPTION

A. Section 04050, "Unit Masonry, General" specifies the installation of masonry work including the accessories specified under this section.

B. The location of the masonry work is shown on the Drawings. The types of masonry accessories required include the following:

Anchoring devices for masonry.

Concealed flashings built into masonry work.

Control joint strips.

Masonry weeps.

Filler strips at tops of masonry partitions.

Precast concrete sills.

Cavity Drainage Material

1.03 SUBMITTALS

A. Manufacturer's Data:

Submit eight (8) copies of manufacturer's specifications and installation instructions for each masonry accessory required. Include data substantiating that materials comply with specified requirements.

B. Test and Engineering Data:

Submit eight (8) copies of certifications of load tests or engineering data substantiating capability of the anchors to withstand the imposed compression/tension loads.

PART 2 - MATERIALS

2.01 CONTINUOUS WIRE REINFORCING

A. Masonry Anchors:

Masonry to Cast-in-Place Concrete: Hohmann & Barnard #305 Dovetail Slot, #315-BT Flexible Dovetail and "Seismiclip", or approved equal by AA Wire Products Co. or Dur-O-Wall, Inc.

Notes:

All materials shall be hot-dip galvanized in accordance with ASTM A 123, Class B2.

Continuous horizontal reinforcement (e.g., truss type and single wire type) shall be secured to each masonry anchor with "Seismiclips".

B. Rigid Steel Anchors: Hot dip galvanized 1 1/2" x 1/4" x 2'-0" long with ends turned up 2 inches in opposite directions or with acceptable cross pins.

2.02 FLASHING FOR MASONRY

Copper Fabric Laminated: Copper sheet weighing 5 ounces per square foot bonded with asphalt between 2 layers of glass fiber cloth. Flashing shall be manufactured by one of the following:

Copper Fabric; Afco Products, Inc.
Copper Fabric Flashing; Sandell Mfg., Co. Inc.
Copper Fabric Flashing; York Mfg., Inc.

Adhesive for flashing shall be as provided by the flashing manufacturer.

2.03 MISCELLANEOUS MASONRY ACCESSORIES

A. Preformed Control Joint Gaskets: Material as indicated below, designed to fit standard sash block and maintain lateral stability in masonry wall; size and configuration as indicated or required.

Styrene-Butadiene Rubber Compound: ASTM D 2000, Designation M2AA-805

B. Weep Holes: Provide the following:

Round Plastic Tubing: Clear butyrate, 3/8 diameter with cotton rope.

C. Compressible Filler: Premolded filer strips complying with ASTM D1056, Type 2, Class A, Grade 1; compressible up to 35 percent; of width and thickness indicated; formulated from the following material.

Neoprene.

D. Cavity Drainage Material: Preformed drainage mats in roll or sheets similar to CavClear Masonry Mat. Thickness shall be ½" minimum.

2.04 PRECAST CONCRETE

A. Architectural precast concrete: Provide custom fabricated, integrally colored sills, complying with the following:

1. Compressive strength: 5,000 psi minimum at 28 days.
2. Entrained air: 5% - 6%.
3. Finish: Light sandblast finish approved by the Authority.
4. Formwork: Comply with applicable requirements of ACI 347, and with PCA forms of Architectural Concrete. Forms shall bear APA grade-trademark and shall have specially formulated aluminum edge sealer. Provide forms true, straight and square. Where joints occur in forms, the interior surface shall be flush. Forms shall be braced rigidly. Prior to each pour, coat forms with approved non-staining form release agent that will not interfere with adhesion of sealants, insulation adhesives or applied finishes.
5. Reinforcement: Provide reinforcement as shown on shop drawings and as specified herein. Provide additional reinforcement required for handling, transportation and erection stresses. Reinforcement shall be cold rolled steel complying with ASTM A 615, Grade 60, deformed and welded wire fabric conforming to ASTM A 185. Reinforcing steel shall be hot-dip galvanized after fabrication.
6. Detailing and fabrication of reinforcement shall conform to ACI 315 and ACI 315R.

PART 3 - EXECUTION

3.01 INSTALLATION

Refer to Section 04050, "Unit Masonry, General" for installation of masonry accessories specified under this section.

END OF SECTION

SECTION 04210

BRICK MASONRY

PART 1 - GENERAL

1.01 RELATED DOCUMENTS

A. Drawings, Contract Conditions and other Technical Sections apply to work of this Section insofar as applicable.

B. Coordinate work with that of all other trades affecting, or affected by work of this Section. Cooperate with such trades to assure the steady progress of all Project work.

1.02 DESCRIPTION

A. Brickwork is indicated on the Drawings. Installation of the face brick and common brick are specified in Section 04050, "Unit Masonry, General".

B. Masonry mortar and grout is specified in Section 04100, "Masonry Mortar and Grout".

C. Masonry accessories, including reinforcing, are specified in Section 04150, "Masonry Accessories".

1.03 QUALITY ASSURANCE

A. Obtain face brick from one manufacturer, of uniform texture and color (or uniform blend in the variation thereof).

B. Standards:

Facing Brick: ASTM C 216-75, Grade SW.

Building (Common) Brick: ASTM C 62.

1.04 SUBMITTALS

A. Manufacturer's Data: Submit brick manufacturer's specifications and other data for each type of product required, including certification that each product complies with the specified requirements. Include instructions for handling, storage, installation and protection of each type of brick.

B. Samples:

1. Submit 5 samples of exposed brick. Include the full range of exposed color and texture to be expected in the completed work. Engineer's review will be for color and texture only. Compliance with all other requirements is exclusively the responsibility of the Contractor.

2. All brick when submitted for approval shall be accompanied by the manufacturer's statement of the following:

   Compressive strength of the brick which will indicate the degree of hardness.

   Certification that the brick submitted is Type SW (Severe Weather) brick.

   Special instructions for laying the brick, if any.

   Any modifications to the mortar mix which might be required for proper bond strength.

PART 2 - MATERIALS

2.01 MATERIALS FOR BRICK MADE FROM CLAY OR SHALE

A. At Contractor's option, provide solid brick, cored or uncored, for vertical brickwork. Do not use cored brick with net cross-sectional area less than 75% of gross area in the same plane or with core holes less than 3/4 inch from any edge.

2.02 BRICK TYPES

A. Face Brick: Comply with the requirements of ASTM C 216, Grade SW, Type FBS standard modular size brick shall be one of the following:

   Belden Brick: 503-505A

   Glen Gery: Carlton

   Endicott: Rose Smooth

B. Building (Common) Brick: Conform to ASTM C 62, Grade SW.

PART 3 - EXECUTION

3.01 INSTALLATION

Refer to Section 04050 "Unit Masonry, General" for installation of brick.

END OF SECTION

SECTION 05500

METAL FABRICATIONS

PART 1 - GENERAL

1.01 RELATED DOCUMENTS

A. Drawings, Contract Conditions and other Technical Sections apply to work of this Section insofar as applicable.

B. Coordinate work with that of all other trades affecting, or affected by work of this Section. Cooperate with such trades to assure the steady progress of all Project work.

1.02 DESCRIPTION

A. The work includes furnishing all materials, equipment, labor, supervision, design and drafting services, and fabricating, painting and performing all operations necessary to complete the metal fabrication work as shown on the Drawings, as specified herein, and as is additionally required to properly complete the work. Metal fabrication includes items made from iron, steel and aluminum shapes, plates, bars, strips, tubes, pipes and castings which are not specified elsewhere.

B. Without in any way limiting the scope of work, the following major items are mentioned:

1. Aluminum bar grating frame.
2. Welded support fabrications.
3. Various anchors for installing/setting in concrete and masonry.
4. Lintels
5. Shop painting of all ferrous items unless otherwise specified.
6. Aluminum Roof Decking

1.03 QUALITY ASSURANCE

A. Codes and Standards: Comply with provisions of the following (latest edition including all amendments), except as otherwise indicated:

The State of Maine Building Code.

AISC "Code of Standard Practice for Steel Buildings and Bridges".

AWS D1.1 "Structural Welding Code".

ASCE-7 "Minimum Design Loads for Buildings and Other Structures".

NAAMM "Standard Specifications for Metal Bar Grating and Metal Bar Grating reads" and "Metal Bar Grating Manual".

B. Qualifications for Welding Work: Qualify welding processes and welding operators in accordance with AWS "Standard Qualification Procedure". Provide certification that welders to be employed in work have satisfactorily passed AWS qualification tests.

C. Field Measurements: Where possible, take field measurements prior to preparation of shop drawings and fabrication. Do not delay job progress; allow for field trimming and fitting where taking field measurements before fabrication might delay work.

D. Shop Prefabrication/Assembly: Prefabricate/preassemble items in shop to greatest extent possible to minimize field splicing and assembly. Disassemble units only as necessary for shipping and handling limitations. Clearly mark units for reassembly and coordinated installation.

E. The work specified under this Section shall be performed by firms that have been engaged in the satisfactory manufacture and fabrication of work of the same type and magnitude as specified herein for a period of at least five years.

1.04 SUBMITTALS

A. Product Data: Submit eight (8) copies of manufacturers' specifications, anchorage/ installation details and installation instructions for products to be used in miscellaneous metal fabrications, including paint and grout products.

B. Shop Drawings: Submit shop drawings for fabrication and erection of miscellaneous metal fabrications. Include plans, elevations, and details of sections and connections. Show anchorage and accessory items. Provide templates for anchor bolts, etc., to be installed by others.

Where materials or fabrications are indicated to comply with certain requirements for design loadings, include structural computations, material properties, and other information needed for structural analysis.

Any discrepancies in the Engineer's Drawings shall be brought to the attention of the Engineer for adjustment. The Contractor shall verify field dimensions with those dimensions given on the Engineer's Drawings, and obtain by measurement at the site all necessary dimensions and levels dependent on construction in-place.

Prior to submission of the shop drawings to the Engineer, they shall be pre-checked by the Contractor for conformity of detail with the Contract Documents and site conditions, and shall be coordinated with other work on the Project as necessary. The signature of a representative of the Contractor indicating that the shop drawings have been pre-checked will be required. The Contractor shall be wholly responsible for the conformity of dimensions and details of the shop drawings with the Contract Documents and site conditions.

After receipt of the shop drawings by the Engineer, they will be reviewed and necessary revisions will be marked on the sepias which will be returned to the Contractor. Revisions shall then be made and the shop drawings resubmitted. This

procedure will be continued until the shop drawings are released for construction. The Contractor shall then deliver to the Engineer one transparency and three prints for his record and the use of his personnel.

At least one copy of each released shop drawing shall be kept available in the Contractor's field office; shop drawings not bearing evidence of release for construction by the Engineer shall not be kept on the job.

C. Samples: Submit 2 sets of representative samples of materials and finished products. Also include a sample weld connection.

D. Design Calculations: The Contractor shall provide written verification that a registered engineer in the State of Maine has designed connections to supporting structures, and all other structurally related items.

1.05 DELIVERY AND STORAGE

A. Upon delivery to the jobsite or storage site, the miscellaneous metal fabrications shall be carefully unloaded and stacked at least 1 foot above the ground in such a manner as to provide ready surface drainage and adequate air circulation. All members exhibiting defective coatings, scars, abrasions, poor surface preparation, etc., shall be remedied by the Contractor to the satisfaction of the Engineer prior to placing items in storage or, if in the Engineer's opinion, such damaged items cannot be satisfactorily repaired, said items shall be promptly removed from the site and replaced with new items meeting the Engineer's satisfaction.

B. Deliver items to the site in a sequence that will allow the work to proceed without delay but will avoid long term storage of items at the site.

PART 2 - MATERIALS

2.01 MATERIALS

A. Metal Surfaces: For fabrication of miscellaneous metal work which will be exposed to view, use only materials which are smooth and free of surface blemishes, including pitting, seam marks, roller marks, rolled trade names and roughness.

B. Steel Plates, Shapes and Bars: ASTM A 36.

C. Aluminum: All structural extrusions shall be 6063-T6; all other extrusions shall be 6063-T5.

D. Expansion Bolts: Stainless steel "Kwik Bolts" as manufactured by Hilti Fastening Systems or approved equal.

E. Non-Shrink, Non-Metallic Grout: Pre-mixed, factory-packaged, non-staining, non-corrosive, non-gaseous grout complying with CRD-C621. Provide grout specifically recommended by manufacturer for interior and exterior applications required.

F. Welding Rods: Conform to AWS Specification AWS D1.1.

G. Fasteners:

Provide stainless steel fasteners for exterior use and where built into exterior walls. Only non-magnetic stainless steel fasteners and washers shall be used where the fastener or washer will be in contact with aluminum.

H. Paint:

Metal Primer Paint: Except as otherwise noted, apply the following Tnemec primer, or approved equal by PPG, Devoe or DuPont to all non-galvanized ferrous surfaces.

Tnemec Series 10-99 Modified Alkyd Rust Inhibitive Primer, 3 dry mils, spray applied.

I. Galvanizing Repair Paint: High zinc dust content paint for regalvanizing welds and abrasions in galvanized steel, complying with Military Specifications MIL-P-21035 (Ships).

2.02 FABRICATION

A. Workmanship:

Use materials of size and thickness indicated or, if not indicated, as required to produce strength and durability in finished products for the use intended, using proven and acceptable details of fabrication and support.

Form exposed work true to line and level with accurate angles and surfaces and straight sharp edges. Ease exposed edges to a radius of approximately 1/32 inch unless otherwise shown. Form bent-metal corners to smallest radius possible without causing grain separation or otherwise impairing work.

Weld corners and seams continuously, complying with AWS recommendations. At exposed connections, grind exposed welds smooth and flush to match and blend with adjoining surfaces.

Provide for anchorage of type shown, coordinated with supporting structure. Fabricate and space anchoring devices to provide adequate support for intended use.

All holes indicated on the Drawings necessary for the installation of anchors shall be made as part of the work of this Section. No holes other than as indicated on the Drawings shall be drilled, punched or cut without the approval of the Engineer. Holes shall not be made by burning.

Material and workmanship shall at all times be subject to the approval of the Engineer.

Thickness of metal and details of assembly and anchors shall provide ample strength and stiffness with anchors concealed where possible. Provide waterproof joints where metal is exposed to the weather. Provide holes and connections for the work of other trades.

B. Codes and Regulations:

All fabrications intended for personnel walking, climbing, guarding and working surfaces, and the installation thereof, shall meet the requirements of the Department of Labor Occupational Safety and Health Standards and all State and local codes. In the event of conflicting requirements, the more stringent or conservative shall apply. All such work shall be stamped by a Professional Engineer registered in the State of Maine.

C. Galvanizing:

Provide a zinc coating for those items shown or specified to be galvanized, as follows:

ASTM A 153 for hot-dip galvanized iron and steel hardware.

ASTM A 123 for hot-dip galvanized iron and steel products.

D. Shop Painting:

Shop paint miscellaneous metal work, except surfaces and edges to be field welded, and galvanized surfaces, unless otherwise indicated. Shop paint the portions of embedded steel to be exposed, and for an additional 2 inches below the exposed portion. Surface preparation and painting shall be performed in accordance with all applicable requirements of Section 09900.

"Commercial Blast Clean" welded support fabrications in accordance with Steel Structures Painting Council (SSPC) SP-6. For ferrous items, clean off heavy rust, loose mill scale, other deleterious materials in accordance SSPC SP-3 "Power Tool Cleaning".

Remove oil, grease and similar contaminants in accordance with SSPC SP-1 "Solvent Cleaning" prior to performing any other surface preparation procedures.

Immediately after surface preparation, apply primer in accordance with manufacturer's instructions at a rate to provide a uniform dry film thickness of 3.0 dry mils. Use painting techniques which will result in full coverage of joints, corners, edges and all other surfaces.

Unless otherwise specifically indicated, apply one shop coat to all non-galvanized carbon steel fabricated items, except apply 2 coats of paint to surfaces inaccessible after assembly or erection. Change color of second coat to distinguish it from the first.

2.03 MISCELLANEOUS METAL FABRICATIONS

A. Rough Hardware:

Furnish conventional as well as bent or otherwise custom fabricated bolts, plates, anchors, hangers, dowels and other miscellaneous steel and iron shapes as required for framing, supporting, anchoring or securing items to concrete, masonry and other materials.

Fabricate items to sizes, shapes and dimensions required. Furnish steel washers for heads and nuts.

B. Miscellaneous Framing and Supports:

Provide miscellaneous steel framing and supports which are not specified elsewhere, as required to properly complete the work.

Fabricate miscellaneous units to sizes, shapes and profiles shown or, if not shown, of required dimensions to receive other work to be retained by framing. Fabricate from structural steel shapes, plates and bars of welded construction using mitered joints for field connections. Cut, drill and tap units as required. No burning of holes shall be allowed.

Hot dip galvanize all miscellaneous carbon steel frames, attachments, supports, etc., to be used in exterior applications and in exterior walls.

C. Aluminum Bar Grating:

Grating shall be pressure-locked type, 1 1/2 inch thick, with rectangular bearing bars. Fabricate grating to be flat, without warp, sized to fit in the utility pit recessed galvanized steel frame. Undercut grating 3/16 inch in both directions to facilitate periodic removal and reinstallation.

D. Brackets, Flanges, Fittings and Anchors:

Provide all types of brackets, closures, flanges, miscellaneous fittings and anchors which are not provided under other specification sections as necessary for the proper completion of the work.

Hot dip galvanize carbon steel members, fittings, brackets, fasteners, and other components for exterior applications and when used in and on exterior walls.

E. Loose Bearing Plates:

Provide loose bearing plates for steel items bearing on masonry or concrete construction, made flat, free from warps and twists, and of required thickness and bearing area. Drill plates to receive anchors and for grouting as required. Galvanize after fabrication.

PART 3 - EXECUTION

3.01 PREPARATION

Coordinate and furnish anchorages, setting drawings, diagrams, templates, instructions, and directions for installation of anchorages, such as concrete inserts, sleeves, anchor bolts and miscellaneous items having integral anchors which are to be embedded in concrete or masonry construction. Coordinate delivery of such items to work performed at the site.

3.02 INSTALLATION

A. Fastening to In-Place Construction: Provide anchorage devices and fasteners where necessary for securing miscellaneous metal fabrications to in-place construction; including expansion anchors, anchor bolts, toggle bolts, through-bolts, lag bolts, wood screws and other connectors, as required. Only expansion anchors are to be used for attaching items to masonry. All fasteners for exterior construction shall be Type 304 or 316 stainless steel.

B. Cutting, Fitting and Placement: The Contractor shall perform all measuring, detailing, cutting, drilling and fitting required to install miscellaneous metal fabrications. Set work accurately in location, alignment and elevation, plumb, level, true and free of rack, measured from verified established lines and levels. Provide temporary bracing or anchors in formwork for items which are to be built into concrete, masonry or similar construction.

   Fit exposed connections accurately together to form tight hairline joints. Field weld connections which cannot be shop welded because of shipping size limitations. Grind exposed joints smooth and touch-up shop paint coat and galvanizing. Do not weld, cut or abrade the surfaces of exterior units which have been hot-dip galvanized after fabrication and are intended for bolted or screwed field connections.

C. Field Welding: Comply with AWS Code for procedures of manual shielded metal-arc welding, appearance and quality of welds made, and methods used in correcting welding work.

D. Setting Loose Bearing Plates:

   Clean concrete and masonry bearing surfaces and roughen to improve bond to surfaces. Clean bottom surface of bearing plates.

   Set loose bearing plates on wedges. Position bearing members and tighten the anchor bolts. Do not remove wedges but cut-off flush with the edge. Use non-metallic, non-shrink grout, unless otherwise indicated.

   Pack grout solidly between bearing surfaces and plates to ensure that no voids remain.

3.03 ADJUST AND CLEAN

A. Restore finishes damaged during installation so that no evidence remains of corrective work.

B. Touch-Up Painting: Immediately after erection, power tool clean in accordance with SSPC SP-3, field welds, bolted connections, and abraded areas of shop paint, and paint exposed areas with same material as used for shop painting. Apply by brush or spray to provide a minimum thickness of 2.0 dry mils of modified alkyd primer.

C. For Galvanized Surfaces: Thoroughly clean field welds, bolted connections and abraded areas and apply 2 coats of approved galvanizing repair compound.

D. Restore aluminum finishes as directed by the fabricator and approved by the Resident.

END OF SECTION

SECTION 06100

ROUGH CARPENTRY

PART 1 - DESCRIPTION

1.01 RELATED DOCUMENTS

A. Drawings, Contract Conditions and other Technical Specifications Sections apply to work of this Section insofar as applicable.

B. Coordinate work with that of all other trades affecting, or affected by work of this Section. Cooperate with such trades to assure the steady progress of all Project work.

1.02 DESCRIPTION

A. The work in this section consists of furnishing all materials, equipment, supplies, transportation, labor and supervision, and performing all operations required to perform all rough carpentry work as shown on the Drawings, as specified herein, and as is additionally necessary to properly complete the work. Work includes, but is not limited to, the following:

1. Structural and rough wood framing.
2. Roof trusses and roof framing, including all blocking, outriggers, etc.
3. Fascia and rake framing.
4. Rough hardware.
5. Gable and overhang framing and sheathing.
6. Roof sheathing.
7. Wood for Strapping..
8. Wood for other trades (i.e., blocking, nailers, grounds, etc.).
9. Temporary protection as required.

1.03 SPECIFIED ELSEWHERE

A. The installation of finish hardware is specified in Section 08700.

1.04 SHOP DRAWINGS

A. Submit copies of shop drawings and manufacturer's product data for approval.

B. Submit shop drawings of trusses showing all necessary design details and calculations, stamped by a professional structural engineer licensed in the State of Maine. Also include jobsite storage instructions and details for a continuous insulation stop at all eaves. The Contractor shall furnish and install insulation stops even though they are not shown on the Resident's Drawings.

C. Submit 18 inch long samples of wood to be used for each element (i.e., trusses, fasciae, rakes, etc.) for approval. Also submit 24 inch square samples of panel

products and each rough hardware item (sheathing clips; metal hangers, straps and gussets; etc.) for approval.

1.05 GENERAL

A. All lumber shall be new, dressed on all sides (S4S), and shall conform to U.S. Department of Commerce Simplified Practice Recommendation R16. Lumber for the various uses shall have characteristics appropriate for the intended use.

B. All lumber and plywood in contact with the ground, concrete, or exposed to the weather shall be preservative treated as specified herein.

C. Obtain measurements and verify dimensions shown on shop drawing details before proceeding with carpentry work, wherever possible.

D. Correlate the location of furring, nailers, blocking, grounds and similar supports so that attached work will comply with design requirements.

E. Fit carpentry work to other work. Scribe and cope as required for accurate fit.

F. Time delivery and installation of carpentry work to avoid delaying other work which is dependent on or affected by the carpentry work and to comply with protection and storage requirements.

G. Keep carpentry materials dry during transport and storage. Store lumber and plywood in stacks with provision for air circulation within stacks. Protect exposed materials against weather. Do not store dressed or treated lumber or plywood outdoors. Store trusses in accordance with the manufacturer's approved instructions and recommendations.

PART 2 - MATERIALS

2.01 STRUCTURAL FRAMING

A. Structural framing, including plates, rafters, outlookers, bracing, blocking, etc., shall be kiln-dried Hem-Fir, No. 1 or better, free of loose knots and other defects that would impair its strength.

2.02 ROOF TRUSSES AND FRAMING

A. The wood trusses and roof framing shall be designed and manufactured by Wood Structures, Inc., of Biddeford, Maine, or approved equal. The top and bottom cords of the trusses shall be a minimum of 2" x 6", as shown. (Coordinate with duct work which may impact the design of trusses and framing.) Provide gussets and extensions as indicated and required.

B. The trusses shall be factory fabricated with adequate plant and under supervision of properly qualified personnel.

C. The trusses shall be assembled with built-in camber and ready for site erection. All members shall be precision cut and assembled in a jig to ensure uniformity with all gusset plates accurately positioned.

D. Metal gusset plates shall be 20 gauge hot-dip galvanized plates perforated with punched teeth. Plate design values shall be as approved by FHA.

E. The fabricator of the trusses shall furnish steel connections and hardware for joining timber members to each other and to their supports exclusive of anchorages embedded in masonry. Such hardware shall conform to the details shown on the Drawings or the approved shop drawings. Hardware items shall have one coat of shop applied premium grade primer containing a rust inhibitor. All exposed connections to be hot-dip galvanized.

2.03 ROUGH HARDWARE

A. Anchors, bolts, nuts, and miscellaneous metal items shall conform to requirements of Federal Specifications FF-B-575. Fastenings for exterior construction shall be hot-dip galvanized.

B. Framing connectors, joist hangers, straps, metal bridging, etc., shall be as manufactured by TECO Timber Engineering Co., Heckman Building Products Inc., or Simpson Strong Tie Connectors, hot dip galvanized in accordance with ASTM A 123 or A 153, as applicable.

2.04 SHEATHING, DECKING AND MISCELLANEOUS PLYWOOD

A. Sheathing shall be "Exterior" APA Performance - Rated Panels (C-D Exterior PS-1), 5/8 inch thick unless otherwise noted. Provide sheathing clips between panels for all joint areas not over framing.

B. Miscellaneous plywood for interior applications, such as electric panel backing boards, shall be Interior DFPA C-D with exterior glue.

2.05 FASCIAE AND RAKES

A. Fasciae, fasciae moldings, rakes, and rake moldings shall be preservative treated custom grade solid Hem-Fir selected for its clear appearance, free of loose knots, large knots, pitch streaks, cupping, etc., subject to approval by the Engineer, fabricated to the shapes shown on the Drawings.

2.06 FURRING AND STRAPPING

A. Furring strapping shall be No. 1 Common Eastern Spruce of the sizes noted on the Drawings.

2.07 WOOD PRESERVATIVE

A. Preservative Treatment: Lumber and plywood shall be treated with preservatives in compliance with applicable requirements of AWPA Standards C2 (Lumber) and C9 (Plywood) and of AWPB standards listed below. Mark each treated item with the AWPB Quality Mark.

1. Pressure-treat above-ground items with water-borne preservatives complying with AWPB LP-2. After treatment, kiln-dry to a maximum moisture content of 15 percent. Treat indicated items and the following:

   a. Wood cants, nailers, curbs, blocking, stripping, and similar members in connection with roofing, flashing, vapor retarders and waterproofing.
   b. Wood sleepers, blocking, furring, stripping and similar concealed members in contact with masonry or concrete.
   c. Wood framing members less than 18 inches above grade.

2. Pressure-treat wood members in contact with ground with water-borne preservatives complying with AWPB LP-22:

3. Complete fabrication of items to be treated prior to treatment, where possible. If members are cut, drilled or otherwise altered after treatment, coat the affected surfaces with two heavy brush coats of same chemical used for treatment. Inspect each piece of lumber or plywood after drying and discard damaged and defective pieces.

2.08 NAILS

A. All nails for framing, sheathing, fasciae, gables and all other exterior applications shall be "double" hot dipped galvanized equal to those provided by Maze Nails, Peru, IL.

PART 3 - CONSTRUCTION METHODS

3.01 INSTALLATION

A. Do all carpentry work required, lay out all lines, provide necessary measurements, and furnish all needed assistance in cooperation with the various trades to insure that the work is thoroughly and satisfactorily completed.

B. Anchor framing members to timber, concrete, and masonry as indicated. All rough carpentry shall be laid out as called for on the Drawings. Cut framing square on bearings, closely fitted, accurately set to required lines and levels, plumb, and secured rigidly in place at bearings and connections.

C. All carpentry shall be performed by workmen skilled in the trade. Lines shall be run true and accurate for support of finish carpentry and other applied finishes.

D. Provide all temporary bracing as required. Maintain OSHA approved ladders at all times for convenient and safe access to all portions of the building.

E. Set trusses plumb, straight and on accurate spacing as shown on the approved Shop Drawings. Use great care in erection to avoid flexing of trusses in the weak direction. Brace trusses temporarily with substantial bracing to prevent falling and distortion from wind and other causes.

F. Frame members for passage of pipes and ducts to avoid cutting structural members. Do not cut, notch or bore members for passage of pipes or wiring without permission of the Resident. Reinforce framing members as directed where damaged or weakened by approved cutting.

G. Nail or spike members in accordance with National Lumber Manufacturer's Association Manual for House Framing.

H. Apply roof sheathing sheets with face grain perpendicular to the rafters and trusses. All end joints shall be on rafters/trusses and shall be staggered. Use a minimum of two (2) sheathing clips to join edges between trusses. Secure sheathing with 8d galvanized nails at 6 inch centers along panel edges, at 12 inch centers at intermediate trusses. Install floor decking in accordance with APA recommendations but with not less than one fastener 6 inches on center at edges and one fastener 12 inches on center over supports.

I. Exposed exterior woodwork shall be provided in the longest practicable lengths to minimize joints. Joints shall be hairline; mitered, scarfed or dadoed, as proposed by the Contractor and approved by the Resident. Joints in running material shall occur only over supports. Exposed mill ends are not acceptable. Drilled holes, cut-outs, cut edges and ends, and other alterations made after preservative treatment shall be sealed before installation.

J. Lay waterproofing sheets using full rolls; no remnants or small pieces will be allowed. Protect from tearing. Lap horizontal joints 3 inches; vertical joints 6 inches. Secure with large head galvanized nails.

K. Provide temporary wood protection for concrete, at trucking points, at entrances, over floor openings, at metal door bucks, and at finished woodwork and millwork, until completion and acceptance of the work.

L. Provide temporary supports and wood centering as required.

END OF SECTION

SECTION 06400

FINISH CARPENTRY

PART 1 - GENERAL

1.01 RELATED DOCUMENTS

A. Drawings, Contract Conditions and other Technical Specifications Sections apply to work of this Section insofar as applicable.

B. Coordinate work with that of all other trades affecting, or affected by work of this Section. Cooperate with such trades to assure the steady progress of all Project work.

1.02 DESCRIPTION

A. Finish carpentry work is shown on Drawings.

B. Finish carpentry work includes, but is not limited to the following:

Plywood soffits with soffit vents.

1.03 QUALITY ASSURANCE

A. Quality Standards: For the following types of architectural woodwork; comply with indicated standards as applicable:

Standing and Running Trim: AWI Section 300 - Premium.
Miscellaneous Work: AWI Section 700 - Custom.

1.04 REFERENCES

AWI Quality Standard: Comply with applicable requirements of "Architectural Woodwork Quality Standards" published by the Architectural Woodwork Institute (AWI), except as otherwise indicated.

1.05 SUBMITTALS

A. Product Data: Submit eight (8) copies of manufacturer's specifications and installation instructions for each product required.

1.06 PRODUCT DELIVERY, STORAGE AND HANDLING

Protect woodwork during transit, delivery, storage and handling to prevent damage, soiling and deterioration.

1.07 JOB CONDITIONS

PART 2 - MATERIALS

2.01 BASIC MATERIALS AND FABRICATION METHODS

A. Except as otherwise indicated, comply with following requirements for architectural woodwork not specifically indicated as prefabricated or prefinished standard products.

B. Wood Moisture Content: Provide kiln-dried (KD) lumber with an average moisture content range of 9% to 12% for interior work; 15% for exterior. Maintain temperature and relative humidity during fabrication, storage and finishing operations.

C. Exterior Wood

Plywood - Painted Finish: Any softwood species, medium density overlay (MDO/EXT-APA).

D. Interior Wood

Plywood - Painted Finish: Any softwood species, medium density overlay (MDO/EXT-APA).

E. Soffit Vents: Soffit vents shall be aluminum "Vent-a-Strip", Model 70 as manufactured by H.C. Products, Co., or approved equal.

F. Measurements: Before proceeding with fabrication of woodwork required to be fitted to other construction, obtain measurements and verify dimensions and shop drawing details as required for accurate fit. Where sequence of measuring substrates before fabrication would delay the work, proceed with fabrication without field measurement, provide ample borders and edges to allow for subsequent scribing and trimming of woodwork for accurate fit.

PART 3 - EXECUTION

3.01 INSTALLATION OF WOODWORK

A. Install the work plumb, level, true and straight with no distortions. Shim as required using concealed shims. Install to a tolerance of 1/8 inch in 8'-0" for plumb and level (including countertops); 1/16 inch maximum offset in flush adjoining surfaces; and 1/8 inch maximum offsets in revealed adjoining surfaces.

B. Scribe and cut work to fit adjoining work and refinish cut surfaces or repair damaged finish at cuts.

C. Anchor woodwork to anchors or blocking built-in or directly attached to substrates. Secure to grounds, stripping and blocking with countersunk, concealed fasteners and blind nailing as required for a complete installation. Except where prefinished

matching fastener heads are required, use fine finishing nails for exposed nailings, countersunk and filled flush with woodwork, and matching final finish where transparent finish is indicated.

3.02 INSTALLATION OF EXTERIOR AND INTERIOR WOODWORK

All woodwork (i.e., soffit and trim) shall be mitered to tight, hair-line joints and shall be back and edge sealed with clear sealer after all cuts are made (including those for soffit vents) and before installation. Joints in running material shall occur only at supports. Prior to installing, wood surfaces that will be inaccessible after installation shall be thoroughly back-primed. Fasteners shall be set below the wood surface and the holes filled and sanded smooth

3.03 ADJUSTMENT, CLEANING, FINISHING AND PROTECTION

A. Repair damaged and defective work to eliminate functional and visual defects. Where it is not possible to repair items to the Resident's satisfaction, replace the work at no additional cost. Adjust joinery for uniform appearance.

B. Refer to Section 09900 for final finishing of installed finish carpentry work and architectural woodwork.

E. Protection:

1. Protect woodwork during the remainder of the construction period to ensure that work will be without damage or deterioration at time of acceptance.

END OF SECTION

SECTION 07200

INSULATION

PART 1 - GENERAL

1.01 RELATED DOCUMENTS

A. Drawings, Contract Conditions and other Technical Specifications Sections apply to work of this Section insofar as applicable.

B. Coordinate work with that of all other trades affecting, or affected by work of this Section. Cooperate with such trades to assure the steady progress of all Project work.

1.02 DESCRIPTION

A. The work includes furnishing of all labor and materials necessary to provide an installation which is complete in every respect and of the composition and quality as specified herein.

B. Applications of insulation specified in this section include, but are not limited to, the following:

1. Board type for perimeter slab where indicated.
2. Board type for masonry cavity walls.
3. Batt type for framed roof trusses.

1.03 QUALITY ASSURANCE

A. Thermal Resistance: Where a minimum "R" value is given, provide thickness required to achieve indicated value.

B. Thermal Transmittance-Heat Transfer: Where a maximum "U" value is given for a wall assembly, provide thickness required to achieve indicated value.

C. Fire and Insurance Ratings: Comply with fire-resistance, flammability and insurance ratings indicated, and comply with regulations as interpreted by applicable codes and local authorities.

1.04 SUBMITTALS

A. Product Data: Submit eight (8) copies of the manufacturers' specifications and installation instructions for each type of insulation and vapor barrier material required.

B. Certified Tests: Submit eight (8) copies of certified test report showing compliance with specified performance values if submitted product is other than those specified.

1.05 PRODUCT HANDLING

Protect insulation from sunlight, from physical damage and from becoming wet, soiled, or covered with ice and snow. Comply with manufacturers' recommendations for handling, storage and protection during installation.

PART 2 - MATERIALS

2.01 MANUFACTURERS

Available Manufacturers: Subject to compliance with requirements, manufacturers offering products which may be incorporated in the work include, but are not limited to those listed below.

2.02 MATERIALS

A. Extruded Polystyrene Board Insulation: Rigid, closed-cell, extruded, polystyrene insulation board with integral high-density skin; comply with ASTM C 578, Type IV, achieve minimum compressive strength of 25 psi at 10% deformation per ASTM D 1621; achieve maximum moisture absorption of 0.3% by volume per ASTM C 272; 5-year aged R-value of 5 per inch at 75°F.

"SM", "TG" or "RM", Dow Chemical Co.
Formula 400, UC Industries/U.S. Gypsum

Expanded polystyrene insulation board is not acceptable.

B. Faced Glass Fiber Batt Insulation: Thermal insulation produced by combining glass fibers with thermosetting resins to comply with ASTM C 665 for Type I and ASTM E 136 with skrim-paper facing.

C. Adhesive for Bonding Insulation: Type recommended by insulation manufacturer and complying with fire-resistance requirements.

D. Mechanical Anchors: Type and size, as recommended by insulation manufacturer for conditions of application and substrates.

E. Mastic Sealer: Type recommended by insulation manufacturer for bonding edge joints between units and filling voids in work.

PART 3 - EXECUTION

3.01 INSPECTION AND PREPARATION

Examine substrate and conditions under which insulation work is to be performed and notify the Engineer in writing of unsatisfactory conditions. Do not proceed with insulation work until unsatisfactory conditions have been corrected in an acceptable manner.

Clean substrates of substances harmful to insulations (or vapor barriers, including removal of projections which might puncture vapor barriers).

3.02 INSTALLATION OF INSULATION

A. Comply with manufacturers' instructions for installation or consult manufacturer's technical representative for specific recommendations before proceeding with work.

B. Apply insulation (full thickness) over entire area to be insulated. Cut and fit tightly around obstructions, and fill voids with insulation, taking care not to overly compress the insulation. Remove projections which interfere with placement.

C. Under-slab Insulation

Set units in accordance with the manufacturer's instructions and recommendations and protect from damage.

D. Cavity-Wall, Concrete Roof Deck, and Foundation Insulation:

Install polystyrene insulation board with globs of adhesive as recommended by manufacturer. Fit closely around reinforcing and obstructions, with all edges butted tightly.

Seal joints between insulation units by applying mastic to edges of each unit to form a tight seal as units are shoved into place. Fill voids in completed installation and around penetrations with mastic or approved sealant.

3.03 PROTECTION

Protect installed insulation and vapor retarders from harmful weather exposures and from physical abuse. Installer shall advise Contractor of exposure hazards, including possible sources of deterioration and fire hazards.

END OF SECTION

SECTION 07600

FLASHING AND SHEET METAL

PART 1 - GENERAL

1.01 RELATED DOCUMENTS

A. Drawings, Contract Conditions and other Technical Specifications Sections apply to work of this Section insofar as applicable.

B. Coordinate work with that of all other trades affecting, or affected by work of this Section. Cooperate with such trades to assure the steady progress of all Project work.

1.02 DESCRIPTION

A. The work in this section consists of furnishing all materials, equipment, transportation, labor and supervision, and performing all operations required to provide all sheet metal work including crickets as shown on the Drawings, as specified herein, and as is additionally required to properly complete the work.

1.03 SPECIFIED ELSEWHERE

A. Ductwork is specified under Section 15050, Basic Mechanical Materials and Methods.

1.04 GENERAL REQUIREMENTS

A. All sheet metal shall have the manufacturer's trade name and thickness or weight marked on each sheet.

B. Surface to which sheet metal is to be applied shall be even, smooth, sound, thoroughly clean, dry and free from all defects that might affect the installation. Materials furnished under this section which are to be built in by others shall be delivered to the site in time to avoid delays in construction progress. All cutting, fitting, drilling, and other operations in connection with sheet metal required to accommodate the work of other trades shall be performed under this section. All accessories and other related items not specifically shown or specified also shall be provided under this section.

C. During construction, care shall be taken to prevent damage to roofing and flashing in place by not walking over or placing materials on or against them.

1.05 SUBMITTALS

A. Submit samples of all materials and copies of pertinent literature for approval before proceeding with the work.

B. Submit Shop Drawings detailing all flashing installations.

PART 2 - MATERIALS

2.01 MATERIALS

A. All copper shall be cold-rolled, 16 oz. lead-coated, as detailed or noted on the Drawings and specified herein.

B. Nails and other accessories used for fastening copper shall be copper, bronze or brass of the required sizes.

C. Solder shall be 40 percent pig lead and 60 percent block tin. Flux shall be muriatic acid killed with zinc, or an approved brand of soldering paste.

PART 3 - EXECUTION

3.01 INSTALLATION

All work shall be as shown on the Drawings, performed in strict compliance with the recommended practice and standard specifications of the Copper and Brass Research Association and "Copper and Common Sense" as published by Revere Copper and Brass.

END OF SECTION

SECTION 07610

METAL ROOFING

PART 1 - GENERAL

1.01 RELATED DOCUMENTS

A. Examine all other Sections of the Specifications for requirements which affect work of this Section whether or not such work is specifically mentioned in this Section.

B. Coordinate work with that of all other trades affecting, or affected by work of this Section. Cooperate with such trades to assure the steady progress of all Project work.

1.02 DESCRIPTION

A. The Contractor shall design, engineer and furnish all materials, equipment, supplies, tools, labor and supervision, and shall perform all work required for the complete installation of weathertight structural standing seam aluminum-zinc alloy coated steel roofing systems for the Building, complete with matching accessories and appurtenances as shown on the Contract Drawings, as specified herein, as required and recommended by the roofing system manufacturer and approved by the Engineer, and as is additionally required for the proper completion of the work, including but not limited: providing a continuous panel anchorage system, waterproofing membrane, expansion joint, crickets, edge treatments, trim closures, penetration flashing, base and cap flashings, transition flashings, miscellaneous flashings, fasteners, sealants, snow guards, etc.

Note: The Contract Drawings depict the design concept and the basic relationship of the various roofs to each other and to other surrounding construction. The metal roofing system shown on the Contract Drawings is a high profile, wide spaced batten system. However, the roof to be provided under this Contract shall be a structural standing seam metal roof as described hereinafter. Edge conditions, flashings, etc., shall remain as shown except where different details are proposed by the roofing system manufacturer to accommodate their particular roofing system and such changes are accepted by the Engineer.

It shall be understood that it is solely the Contractor's responsibility to fully inspect and investigate all conditions affecting the proper installation of the standing seam metal roofing system required, and to insure that all conditions are suitably provided for in the manufacture, fabrication and installation of the roofing system regardless of what may be shown/specified or not shown/specified on the Contract Drawings or in the specifications. The aesthetic requirements shown on the Contract Drawings, other than batten spacing, the requirements of these specifications, and the preferred recommendations of the roofing system manufacturer, as approved by the Resident, shall be complied with in all instances, at no additional cost to the Authority. In case of conflict between requirements, the more stringent and costly requirement, as determined solely by the Resident, shall apply. Therefore, it is incumbent on the

Contractor to review the Contract Work in detail with the proposed roofing system manufacturer(s) prior to submitting a bid for the Contract work.

Single panels with proper lap at intersections shall be use for each slope to cover the perimeter of the roof. Submit Shop Drawings for approval.

B. Flashing and sheet metal required for the work of this Section, such as for edge conditions and penetration flashings, shall match the roofing and shall be provided in accordance with the requirements of the roofing system manufacturer's approved Shop Drawings and installation instructions.

C. Joint sealer work that is required to make the roofing installation watertight and weathertight with abutting construction shall be performed as part of the work of this Section in accordance with the, roofing system manufacturer's approved Shop Drawings and installation instructions.

1.03 SUBMITTALS

A. Shop Drawings: As noted above, the Contract Drawings depict the design concept and the basic relationship of the various roofs to each other and to surrounding construction based on a high profile, wide spaced batten system. It is solely the responsibility of the Contractor to have the proposed roofing system manufacture develop detailed Shop Drawings to properly adapt the proposed roof system to all Project conditions. Shop Drawings shall include but not be limited to: layouts of vapor retarder, waterproofing membrane, and roofing panels, and full scale plans, elevations and details of edge conditions, joints, expansion joints, standing seam profiles, anchorages, blocking, flashings, closures, tie-ins to adjacent construction, and all other details required to fully illustrate all conditions of work. Distinguish between factory and field assembly work.

1. Shop Drawings shall bear the seal and signature of a Professional Engineer, licensed in the State of Maine.
2. Layout drawings and sections shall show adjacent construction, and be keyed into benchmarks and grid lines established on the Contract Drawings.
3. Details shall show dimensions, thicknesses, materials, finishes, continuous anchors, edge trim, sealant locations, fasteners and spacing, etc. Details shall also show and identify joint conditions, anticipated fabrication and erection tolerances, anticipated thermal movement, etc.
4. Provide isometric drawings for each juncture between flashing assemblies, at interfacing and adjacent work, at penetrations, and at typical roof transitions and end conditions.
5. Roofing panel, waterproofing membrane, vapor retarder, edge trim, etc., joints shall be laid out on the Shop Drawings. It shall be understood that the Engineer will be at liberty to revise joint layouts as deemed necessary, at no additional cost and with no time extension.
6. Submit erection drawings showing proposed sequence of installation.
7. Submit manufacturer's written instructions and comments, fastener descriptions and spacings, and all other pertinent information.

8. Submit manufacturer's written instructions and details for the snow guard system.

B. Product Data: Submit specifications for material and fabrication of metal roofing system materials, and detailed instructions and recommendations for handling, storing, installation and maintenance. Include manufacturers' product data for roof panels, fasteners, sealants, backer rod, insulation, vapor retarder, waterproofing membrane, and all other manufactured products. Include certified test reports showing compliance with requirements where a test method is indicated.

C. Samples

1. Submit samples of roofing system components. Provide assembled sample panels 18 inches long by two panels wide using the same materials to be used in the finished work. Include continuous anchors, fasteners, waterproofing membrane, insulation and other accessories. Provide a horizontal (end) joint on each side of standing seam in the middle of the sample panel.
2. Submit a 24 inch long radius roof edge fabrication (e.g., edge cover and brake metal closures), each with typical finished mating joints.

D. Quality Control/Assurance Submittals

1. Submit for review copies of ASCE-7 Load Analysis prepared and/or reviewed and sealed by a Professional Engineer licensed in the State of Maine.
2. Submit design calculations bearing the seal and signature of a Professional Engineer licensed in the State of Maine, indicating compliance with specified performance criteria and fastener pull-out calculations. The submittal shall indicate fastener types, spacings and numbers required for each installation condition.
3. Submit test reports for independent testing laboratories bearing the seal of a registered Professional Engineer to certify compliance with the specified performance criteria.
4. Submit complete and current data for the roof system as follows:

    a. Thermal cycle testing of the metal roof panel and continuous panel anchors as specified.
    b. Uniform ultimate wind uplift load capacity for the roofing system specified.
    c. Ultimate pullout capacity for all anchors.
    d. U.L. 90 classification data specific to the roofing system to be provided. Include letter by U.L. attesting that the roofing system is currently classified and listed.
    e. Model load test per ASTM E 330, modified.
    f. Static air infiltration test data.
    g. Water penetration test data.

5. Submit manufacturer's complete log of field reports (initial, progress and final).
6. Upon completion of the work, submit letter from the manufacturer certifying that the roof installations are in accordance with the approved Shop Drawings and

installation instructions and requirements, and that the manufacturer will issue the specified watertightness warranty.

E. Welding

Submit welder certifications.

F. Warranties

Submit samples of the roofing manufacturer's twenty-year warranty agreeing to repair/ replace defective materials and workmanship in an aesthetically acceptable manner, to the Authority's complete satisfaction, as required to maintain the roofing installations, including flashings, trim, etc., in a watertight condition under peak weather conditions. Warranty shall not exclude any conditions, such as flashings, trim, penetrations, etc.

Submit sample of the roofing manufacturer's standard twenty-year sheet steel warranty and material finish warranty.

Warranties shall be in addition to and not a limitation of other rights the Authority may have against the Contractor under the Contract Documents.

1.04 QUALITY ASSURANCE

A. Contractor shall have a minimum of 5 years continuous successful experience in fabricating and installing roofing systems of similar type (e.g., long field-formed panels) and complexity to that required for this Project and shall be an authorized installer for the roofing system manufacturer. Submit a list of installations. The manufacturer of the roofing system shall have a minimum of 10-years experience in the manufacturer of roofing systems of the type required for this Project.

B. Use adequate numbers of skilled workmen who are thoroughly trained and experienced in the necessary crafts, and who are completely familiar with the specified requirements and the methods needed for proper performance of the work of this Section.

C. Manufacturer's representative is to inspect and approve surfaces to which the roofing system material will be applied prior to start of work and shall instruct and assist installer as deemed necessary. Manufacturer's representative shall also provide intermittent project supervision and final inspection at end of work and before issuance of warranty. Also refer to paragraph 3.03.

D. In addition to complying with requirements of governmental agencies having jurisdiction, the roofing system shall comply with U.L. Class 90 wind uplift requirements based on wind loads at the site, U.L. Class A fire rating requirements and pertinent recommendations contained in the SMACNA "Architectural Sheet Metal Manual".

E. Roof System Requirements

1. Structural Tests: Installed roof system shall carry positive uniform design loads with maximum system deflection of L/180 as measured at the rib of the panel.
2. Water Penetration: Installed roof system shall exhibit no uncontrolled water penetration when exposed to dynamic rain at 6.25 psf differential air pressure for not less than five minutes, when testing in accordance with ASTM E 331.
3. The metal roof system shall be designed to:

    a. Drain leakage and condensation to the exterior.
    b. Provide independent movement of all roof components consistent with a thermal range of -20 to +180 degrees F, and consistent with anticipated movement of the building structures.
    c. Provide panel weathertightness without reliance on sealants or elastomeric membranes.
    d. Provide flashing, gutters, downspouts and edge assemblies related to the roof that are watertight.
    e. Provide required wind uplift resistance as determined by ASCE-7 analysis with a safety factor of 1.5.

F. Panel Anchor Requirements

Connection of continuous panel anchors to substrate shall be designed to resist loads developed by the specified pressures with due regard to prying forces and/or bending due to eccentric loading. Performances shall be evaluated at positions of extreme thermal movement. Factor of safety for connections shall be 2.5.

G. Uniform load capacity of 2 times design load shall be determined by testing in accordance with the principles of ASTM E 330, adapted to testing of formed sheet panels by additions to specific sections as follows:

1. Roof test specimens shall represent the conditions evaluated, free of undue influence of perimeter conditions. Panels shall be continuous over one or more interior supports and contain at least four panel widths.
2. No roof attachments are permitted at the sides other than the standard edge condition. For uplift tests, at least one end seal shall be flexible and in no way restrain the crosswise distortion of the panels.
3. Roofing panels and accessories are to be production material of the same type and thickness required for use on the Project.
4. Longitudinal seals or plastic film shall not span any crevice or crack that may tend to separate under differential pressure.

H. Any necessary welding shall be performed only by skilled workmen with current AWS certification for the type of welding work required for this Contract. Welding shall be performed in accordance with applicable AWS requirements.

PART 2 - PRODUCTS

2.01 GENERAL

A. Fabricate for waterproof and weather-resistant performance, with expansion provisions for running work, sufficient to permanently prevent leakage, damage, and deterioration of the work. Form work to fit substrates. Comply with roofing system manufacturer's instructions and recommendations for forming material.

B. Materials shall be selected for their surface flatness and freedom from blemishes. Materials exhibiting waves, roller marks, gouges, dents, creases, pitting, scrapes, scars and similar defects will be rejected.

C. All metal work shall be formed to produce installed units free from waves, buckling, severe oil-canning and similar defects under all conditions of service. Units shall be formed true to line, with smooth "sharp" bend lines, and with exposed edges folded back to form hems.

2.02 ROOF SYSTEM MANUFACTURERS

A. The "Zee-Lock Roof System" produced by Berridge Manufacturing Company (as indicated in current literature) is cited as capable of meeting the appearance, quality, construction type, performance and durability requirements of this Contract. Systems by other manufacturers that are equivalent in all respects (i.e., appearance, type of construction, performance and durability), may be used in the work. However, it shall be understood that the Resident will be the sole judge of a system's acceptability, and that the rejection of a proposed system shall not give rise to any claims for additional compensation or extension to the Time(s) of Completion.

2.03 METAL ROOF PANELS

A. Minimum 24 gage aluminum-zinc alloy (Galvalume) coated sheet steel conforming to ASTM A 792 in continuous field formed panels of the required lengths. The gage of the coated steel shall be increased from 24 gage, at no additional cost, if necessary to meet Contract requirements.

B. Panels shall have a minimum 2 inch vertical rib height, spaced 16 inches on center.

C. Panels shall be true standing seam shape, requiring no foam closures or fillers at terminations.

D. Standing seams shall incorporate mechanically interlocked continuous anchors of a configuration that will prevent entrance or passage of water.

E. Continuous concealed anchors shall resist positive and negative loading yet permit thermal expansion and contraction of panels.

F. Seams that are not mechanically locked are not acceptable.

G. Standing seams shall contain a factory applied extruded vinyl weather seal to prevent siphoning of moisture through the side joint seam.

H. Horizontal seams shall not be permitted.

2.04 CONTINUOUS ANCHORS

A. Standing seam roof panels shall be fastened to continuous zee-shaped anchors that are secured to the substrate.

B. Manufacturer shall design the continuous anchors, fasteners and fastener spacing to maintain the required wind uplift resistance and other performance criteria.

2.05 MISCELLANEOUS METAL

A. Provide all necessary terminations, flashings, gutters, edge conditions, special shapes, transitions, expansion joints, etc., required for complete and weathertight installations. All such items shall be the same material as the roof panels, except that edge condition materials and brake metal closures shall be minimum 22 gage.

B. Fasteners

Exposed fasteners shall be Series 300 stainless steel fasteners with neoprene-backed watertight stainless steel washers. All exposed portions of fasteners and washers shall receive a two-coat high quality urethane finish to match the roof panels.

Exposed rivets, where approved by the Engineer, shall be self-plugging type, minimum 3/16 inch diameter, fabricated from Series 300 stainless steel with the same material for stems, and with neoprene seal washers.

Concealed fasteners shall be corrosion resistant type equal to self-drilling "Dril-lex" fasteners with "Stalgard" coating by Elco Industries, Inc., Rockford, IL.

Fasteners and plates for installation of insulation shall be equal to "Sarnafasteners and Plates" by Sarnafil, Inc., Canton, MA.

C. Plywood Sheathing

As specified in Rough Carpentry Section.

D. Roofing Felt

Shall be ice/waterproofing membrane specified below.

E. Ice/Waterproofing Membrane

Self-adhering 60 mil reinforced rubberized asphalt waterproofing membrane equal to "Winter Guard Waterproofing Shingle Underlayment" by CertainTeed Corporation, Valley Forge, PA.

F. Vapor Retarder

Shall be the ice/waterproofing membrane specified above.

G. Sealant

One-part silicone sealant equal to "Spectrem 1" by Tremco Sealants and Coatings, Beachwood, OH.

2.06 FABRICATION

A. Fabricate panels onsite in continuous lengths as required. Examine panels as they are being formed to insure that they are within the manufacturer's acceptable tolerances.

B. Provide linear sheet metal items in minimum 10'-0" lengths except as otherwise approved on the Shop Drawings. Form flashing using single pieces for the full width. Provide shop fabricated, mitered and joint corners.

C. Comply with the dimensions, profiles, and details shown, or if not shown, in accordance with details provided by the Engineer.

PART 3 - EXECUTION

3.01 INSTALLATION

A. Inspection: Examine substrates to receive roofing. Do not proceed until all defects are corrected.

Verify that decks are sound, dry, and securely attached, and that provisions for flashings, expansion joints, and all items attaching or penetrating through the work of this Section have been provided for and that roofing work may proceed.

Field check dimensions and support alignment.

Provide all fastener alignment markings necessary so that marks can be transferred onto vapor retarder, as appropriate.

B. Sheathing: Installed as specified - Rough Carpentry Section.

C. Ice/Waterproofing Membrane: After the sheathing installation has been approved by the roofing system manufacturer's representative, apply ice/waterproofing membrane over sheathing in accordance with the approved Shop Drawings and the membrane manufacturer's installation instructions, taking care to provide 6 inch weatherlapped head joints and 18 inch lapped end joints in a manner to drain any entrapped moisture to the exterior.

D. Installation of Metal Roofing and Flashing

1. Install roofing in strict accordance with the approved Shop Drawings and installation instructions.
2. Metal workmanship shall conform to applicable standards set forth in the "Architectural Sheet Metal Manual" as published by SMACNA.
3. Isolate dissimilar metals and masonry or concrete from metals with an Engineer approved bituminous coating. Use gasketed fasteners where required to prevent corrosive action between fastener, substrate and panels.
4. Limit exposed fasteners to extent indicated on Shop Drawings.
5. Anchorage shall allow for temperature expansion and contraction movement without stress or elongation of panels or fasteners. Attach continuous panel anchor to structural substrate using fasteners of size and spacing as determined by manufacturer's design analysis to resist specified uplift and thermal movement forces.
6. Coordinate flashing and sheet metal work to provide weathertight conditions at roof terminations. Fabricate and install in accordance with standards of SMACNA Manual using continuous cleats at all exposed edges.
7. Roofing, fascia overlay, gutter and accessories shall be installed in accordance with the approved Shop Drawings and installation instructions such that in plan and elevation, horizontal and vertical lines are true and square, and that other lines are as shown on the approved Shop Drawings. Provide adjustment within system to accommodate variations of existing structure. Deviation from designated locations shall not exceed 1/8 inch per 12 feet of length of any member or 1/4 inch in any total run in any line.
8. Verify with manufacturer locations of fixed connections and expansion connections.
9. Roll form panels on site taking care to properly support long panels (support at maximum 6 foot intervals).
10. Install starter and edge trim and fascia overlay before installing roof panels.
11. Install panels to continuous anchors (ribs) in accordance with the manufacturer's details.
12. Seam panel sidelaps using power-driven seamer as recommended by manufacturer to ensure watertightness.
13. Erect metal roofing with lines, planes, arrises and angles sharp and true, and plane surfaces free from waves, warp, dents, buckles, or other physical defects, with minimum oil canning.
14. Do not allow traffic on completed roof. If required, provided cushioned walk boards.
15. Protect installed roof panels and trim from damage caused by adjacent construction until completion of installation.
16. Remove and replace any panels or components which are damaged beyond successful repair.
17. Fit components accurately together to form joints that will be weathertight.
18. Do not install components which are observed to be defective, including, but not limited to those that are warped, bowed, twisted, dented, abraded, or otherwise damaged, including damage to finish.
19. Do not cut, trim, weld, or braze component parts during erection in a manner which would damage the finish, decrease strength, or result in a visual imperfection or a failure in performance.

20. Do not allow panels to come into contact with dissimilar materials. Apply an Engineer approved isolator between surfaces. Use gasketed fasteners to eliminate the possibility of corrosive or electrolytic action between metals.
21. Coordinate the roofing work with that of other trades as necessary.
22. Thoroughly wipe-down roofing and other surfaces as erection progresses.
23. Install sealant as shown on the approved Shop Drawings and installation instructions.

F. Flashing

1. Comply with "SMACNA" Architectural Sheet Metal Manual" recommendations for installation of work.
2. Conceal fasteners and expansion provisions wherever possible.
3. Fold back edges of concealed side of exposed edge to form hem.
4. Insert metal flashings into reglets, anchor with fasteners and wedges and seal joints.
5. Set sheet metal items level, true to line, and plumb.
6. Secure to wood with screws.
7. Set metal already partly formed in place and fasten by means of cleats.
8. Use cleats to keep laps closed when face width exceeds 8 inches for 24 gauge steel.

G. Damaged Finishes: Repair damaged finish of panels, trim, closures, flashing, etc., to the satisfaction of the Engineer. If any item cannot be repaired to the Engineer's satisfaction, it shall be promptly replaced.

3.02 FIELD QUALITY CONTROL

A. Manufacturer's Field Service:

1. Manufacturer's representative shall be present at each pre-installation and pre-roofing conference, and during set-up of manufacturer's field forming equipment.
2. Manufacturer's representative shall examine the roof structures with installer prior to beginning roof installation.
3. Manufacturer's representative shall be present during initial layout and installation of roofing system. Observe minimum of initial one week period of roof panel installation on daily basis, ensuring installer follows manufacturer's installation recommendations and shop drawings. Observe initial forming passes for fabrication with acceptable tolerances.
4. Manufacturer's representative shall be on site for the duration of the installation period.
5. Manufacturer's representative shall examine completed installation for conformance to Shop Drawings. Notify installer and Contractor in writing of discrepancies.

3.03 CLEANING

A. Clean exposed surfaces of work promptly after completion of installation. To prevent rust staining on finished surfaces, immediately removing fillings produced by drilling or cutting.

B. Clean roof in accordance with manufacturer's recommendations.

C. Clean exposed surfaces of roofing and accessories after completion of installation. Leave in clean condition at date of Substantial Completion of Project. Touch up minor abrasions and scratches in finish.

D. Remove all scrap and construction debris from the site.

3.04 FINAL INSPECTION

Final inspection and certification will be provided by the manufacturer’s representative.

3.05 PROTECTION AND CLEAN-UP

A. Leave all work clean, free from grease, finger marks, sealant stains, etc. Remove excess sealant, dirt and other substances from roofing system components and from abutting and surrounding construction. Cleaning materials and procedures shall be approved by the Engineer and be acceptable to the manufacturers of the materials to be cleaned. Advise the Contractor of protective measures and precautions required to ensure that roofing installations will be without damage or deterioration (other than normal weathering) at time of acceptance.

B. Remove all debris and rubbish caused by the work of this Section as the work progresses.

END OF SECTION

SECTION 07900

JOINT SEALERS

PART 1 - GENERAL

1.01 RELATED DOCUMENTS

A. Examine Drawings, Contract Conditions all other Sections of the Specifications for requirements which affect work of this Section whether or not such work is specifically mentioned in this Section.

B. Coordinate work with that of all other trades affecting, or affected by work of this Section. Cooperate with such trades to assure the steady progress of all Project work.

1.02 DESCRIPTION

A. In general, the conditions requiring joint sealers are shown on the Drawings. This phase of work includes the furnishing all equipment, labor and materials necessary to provide joint sealant installations which are complete in every respect and of the composition and quality as specified herein.

B. The required applications include, but are not necessarily limited to the following:

1. Pavement and sidewalk joints subjected to foot or vehicular traffic.
2. Exterior building wall joints, including joints at windows, doors and louvers.
3. Flashing and coping joints.
4. Miscellaneous concrete construction joints.
5. Masonry expansion joints; exterior and interior.
6. Construction joints in islands, curbing, pavement and barrier walls

C. Sealants for glazing are specified in Section 08800.

1.03 SUBMITTALS

A. Manufacturer's Data: Submit eight (8) copies of manufacturers' specifications, recommendations and installation instructions for each type of material and application required. Include manufacturer's published data, or letter of certification, or certified test laboratory report indicating that each material complies with the requirements and is intended generally for the applications shown.

B. Samples: Submit three 12 inch long samples of each color required for each type of joint sealer exposed to view. Install sample between 2 strips of material similar to or representative of typical surfaces where sealer will be used, held apart to represent typical joint widths. Samples will be reviewed by the Engineer for color and texture only. Compliance with all other requirements is exclusively the responsibility of the Contractor.

C. Guarantee: Submit two copies of written guarantee agreeing to repair or replace joint sealers which fail to perform as airtight and watertight, or fail in joint adhesion, cohesion, abrasion resistance, weather resistance, extrusion resistance, migration resistance, stain resistance, or general durability, or appear to deteriorate in any other manner not clearly specified by submitted manufacturer's data as an inherent quality of the material for the exposure indicated. The Contractor shall provide signed guarantee for a period of two years.

1.04 QUALITY ASSURANCE AND COORDINATION

A. Prior to commencing work required by this Section, the Contractor shall examine the areas and conditions which exist where joint sealer work is to be performed and notify the Engineer in writing of any conditions which are in conflict with requirements of the Contract Documents and are detrimental to the proper and timely completion of the Work. Do not proceed with the work until unsatisfactory conditions have been corrected.

B. Do not proceed with installation of sealants under adverse weather conditions, or when temperatures are below or above the manufacturer's recommended limitations for installation. Proceed with the work only when temperatures are below or above manufacturer's recommended limitations for installation. Proceed with the work only when forecasted weather conditions are favorable for proper cure and development of high early bond strength. Wherever joint width is affected by ambient temperature variations, install elastomeric sealants only when temperatures are in the lower third of manufacturer's recommended installation temperature range.

PART 2 - MATERIALS

2.01 MATERIALS

A. Colors: For exposed materials provide color as indicated or, if not indicated, as selected by Engineer from manufacturer's standard colors. For concealed materials, provide the color which has the best overall performance characteristics.

B. Hardness: As recommended by manufacturer for application shown, unless otherwise indicated or required by the Engineer.

C. Modulus of Elasticity: Provide the lowest available modulus of elasticity which is consistent with exposure to weathering, indentation, vandalism, abrasion, support of loading, and other requirements.

D. Compatibility: Before purchase of each required material, confirm its compatibility with each material it will be exposed to in the joint system. Notify the Resident of potential problems.

E. Size and Shape: As shown or, if not shown, as recommended by the manufacturer and approved by the Resident for the type and condition of joint, and for the indicated joint performance or movement.

F. Grade of Sealant: For each application, provide the grade of sealant (non-sag, self-leveling, no-track, knife grade, preformed, etc.) as recommended by the manufacturer and approved by the Resident for the particular condition of installation (location, joint shape, ambient temperature, and similar conditions), to achieve the best possible appearance and overall performance. Grades specified herein are for normal conditions of installation.

2.02 ELASTOMERIC SEALANTS

A. Foot Traffic Joints: Two-component polyurethane sealant; polyurethane- based, 2-part elastomeric sealant, complying with FS TT-S00227E, Type 1, Self-leveling, Class A. Provide one of the following:

Pecora NR-200; Pecora
Sonolastic Pavement Joint Sealant; Sonneborn/Contech, Inc.
Tremco THC - 900/901; Tremco

B. Exterior Joints and Interior Moving Joints: Polymeric base sealant; modified polyurethane rubber, 2 or 3 part elastomeric sealant complying with FS TT-S00227E, Type II, Non-sag, Class A. Provide one of the following:

Dymeric Sealant; Tremco
Dynatrol II; Pecora
Sonolastic NP-2; Sonneborn/Contech Inc.

Note: Wherever polyurethane sealants are in contact with anodized aluminum, the sealant manufacturer's recommended primer shall be used.

2.03 NON-ELASTOMERIC SEALANTS

Interior Non-moving and Non-watertight Joints: One-component, non-staining, non-sagging, non-bleeding acrylic emulsion base latex sealant. Use only at interior joints where movement is not likely and watertightness is not necessary. Sealant shall be "Mono" by Tremco or approved equal by Pecora or Sika.

2.04 JOINT FILLERS

A. Bituminous and Fiber Joint Filler:

B. Provide resilient and non-extruding type premolded bituminous impregnated fiberboard units complying with ASTM D 1751, FS HH-F-341, Type 1 and AASHTO M 213. Provide where concrete slabs meet walls and similar isolation points as shown on the Drawings or directed by the Engineer.

C. Joint Primer/Sealer: Provide the type of joint primer/sealer recommended by the sealant manufacturer for the joint surfaces to be primed or sealed.

D. Bond Breaker Tape: Self-adhering polyethylene tape or other plastic tape as recommended by the sealant manufacturer to be applied to surfaces where bond of

sealant to the substrate or joint filler or backer rod must be avoided for proper performance of sealant.

E. Sealant Backer Rod: Compressible rod stock of polyethylene foam, polyethylene jacketed polyurethane foam, butyl rubber foam, neoprene foam or other flexible, permanent, durable, closed-cell, non-absorptive, non-gassing material as recommended for compatibility with sealant by the sealant manufacturer and approved by the Engineer. Install backer rod behind the sealant in all exterior and interior masonry expansion joints unless otherwise detailed.

F. Compressible Filler and Fire-rated Sealant: Filler shall be "Polytite" precompressed expanding tape as manufactured by Sandell Mfg. Co. or approved equal by W. R. Grace or Willseal. Sealant shall be approved gun-grade material by 3M Co. or Hilti.

PART 3 - EXECUTION

3.01 MANUFACTURER'S INSTRUCTIONS

Comply with manufacturer's printed instructions except where more stringent requirements are shown or specified, and except where manufacturer's technical representative directs otherwise.

3.02 JOINT PREPARATION

A. Clean joint surfaces immediately before installation of sealant. Remove dirt, insecure coatings, moisture and other substances which would interfere with bond of sealant. Etch concrete and masonry joint surfaces as recommended by sealant manufacturer. Roughen vitreous or glazed joint surfaces if recommended by sealant manufacturer.

B. Prime joint surfaces wherever shown or recommended by the sealant manufacturer. Do not allow primer to spill or migrate onto adjoining surfaces.

C. At exterior masonry joints where flexible thru-wall flashing has been left extended 4 inches beyond the wall, carefully secure the flashing to the upper masonry wall in order to prepare the joint to receive sealant.

3.03 INSTALLATION

A. Set joint filler units at proper depth and position in the joint to coordinate with other work, including the installation of bond breakers and backer rods. Do not leave voids or gaps between the ends of joint filler units; bond ends together as recommended by the manufacturer.

B. Install sealant backer rod for elastomeric sealants, except where shown to be omitted or recommended to be omitted by sealant manufacturer for the application shown.

C. Take care to ensure that sealant does not cover any weep holes.

D. After the joints where the flexible thru-wall flashing occurs have been sealed and the sealant has cured sufficiently to prevent deformation of the joint, carefully cut off the extended thru-wall flashing to protrude 1/8 inch beyond the end of the horizontal leg of any exposed steel lintel at a window or door opening.

E. Install bond breaker tape wherever shown and required by the manufacturer's recommendations to ensure that elastomeric sealants will perform properly.

F. Employ only proven installation techniques which will ensure that sealants will be deposited in uniform, continuous ribbons without gaps or air pockets, and with complete "wetting" of the joint bond surfaces on opposite sides. Except as otherwise indicated, fill sealant rabbet to a slightly concave surface, slightly below adjoining surfaces. Where horizontal joints are between a horizontal surface and vertical surface, fill joint to form a slight cove so that joint will not trap moisture and dirt.

G. Install sealant to depths as shown or, if not shown, as recommended by the sealant manufacturer but within the following general limitations, measured at the center (thin) section of the bead.

For sidewalks, pavements and similar joints sealed with elastomeric sealants and subject to traffic and other types of abrasion and indentation exposures, fill joints to a depth equal to 75% of joint width, but neither more than 3/4 inch deep nor less than 3/8 inch deep.

For normal moving joints sealed with elastomeric sealants but not subject to traffic, fill joints to a depth equal to 50% of joint width, but neither more than 1/2 inch deep nor less than 1/4 inch deep.

For joints sealed with non-elastomeric sealants fill joints to a depth in the range of 75% to 125% of joint width.

H. Do not allow sealants or compounds to overflow or spill onto adjoining surfaces or glass, or to migrate into the voids of adjoining surfaces. Clean such surfaces by whatever means may be necessary to eliminate evidence of spillage, as approved by the Engineer.

I. Recess exposed edges of gaskets and joint fillers slightly behind adjoining surfaces, unless otherwise shown, so that compressed units will not protrude from the joint.

J. Bond ends of gaskets together with adhesive or by other means as recommended by the manufacturer to ensure continuous watertight and airtight performance. Miter-cut and bond ends at corners unless molded corner units are provided.

3.04 CURING AND PROTECTION

Cure sealants in compliance with manufacturer's instructions and recommendations to obtain high early bond strength, internal cohesive strength and surface durability. Advise the Contractor of procedures required for the cure and protection of joint sealers during

the construction period, so that they will be without deterioration or damage (other than normal wear and weathering) at the time of Authority's acceptance.

END OF SECTION

SECTION 08400

ALUMINUM ENTRANCE DOORS AND FRAMING

PART 1 - GENERAL

1.01 RELATED DOCUMENTS

A. Examine Drawings, Contract Conditions all other Sections of the Specifications for requirements which affect work of this Section whether or not such work is specifically mentioned in this Section.

B. Coordinate work with that of all other trades affecting, or affected by work of this Section. Cooperate with such trades to assure the steady progress of all Project work.

1.02 DESCRIPTION

The work in this section consists of furnishing all materials, equipment, transportation, labor and supervision, and performing all operations required to furnish and install an aluminum entrance door, frame, transom, sidelite, associated hardware, and joint sealing as shown on the Drawings, as specified herein, and as is additionally required to properly complete the work.

1.03 SPECIFIED ELSEWHERE

A. Joint sealing related to aluminum frames is part of the work of this section and shall be performed in accordance with the requirements of Section 07900, Joint Sealers.

B. Glass and glazing shall be performed under Section 08800.

1.04 GENERAL REQUIREMENTS

A. Aluminum entrance door, frame and transom, as detailed on the Drawings and specified herein are as manufactured by Kawneer Architectural Products. Products of similar quality and appearance manufactured by Vistawall or Wausau will be considered for use. The door detailed is a Medium Stile Kawneer "350 Entrance Door" with "451T" framing.

B. Performance: The design and construction of the aluminum entrance doors shall be such as to pass the tests listed below.

1. Dual Moment Load Test as follows:

a. Test sections shall consist of a standard top door corner assembly. Side rail section shall be 24 inch long and top rail section shall be 12 inch long.

b. Anchor "top rail" positively to test bench so that corner protrudes 3 inches beyond bench edge.

c. Anchor a lever arm (capable of supporting 300 pounds) positively to "side rail" at a point 19 inches from inside edge of "top rail". Attach weight support pad at a point 19 inches from inner edge of "side rail".

d. Test section shall withstand a load of 270 pounds on the lever arm before reaching the point of failure which shall be considered a rotation of the lever arm in excess of 45°.

1.05 SHOP DRAWINGS AND PRODUCT DATA

Submit eight (8) copies of shop drawings showing door and frame details for approval. Submit seven copies of manufacturers' product data for door, framing, and each type of hardware required.

1.06 SAMPLES

A. Submit two (2) sets of 12 inch long samples of extrusions and formed shapes. Include 3 or more samples in each set showing near-limits of variations in color and finish. Once approved, samples submitted under this section will establish the extreme variation in color acceptable.

B. Submit samples of each type of hardware required.

PART 2 - MATERIALS

2.01 MATERIALS

A. Sections shall be extruded from 6063-T3 aluminum alloy (ASTM B 221, alloy GS 10A-T5).

B. Major portions of the door stiles shall be .125 inch in thickness; glazing molding shall be .050 inch thick.

2.02 CONSTRUCTION

A. Doors. - The Kawneer "350 Entrance Door" shall have vertical stiles of 3-17/32 inches, top rails of 3-17/32 inches, and bottom rails of 6-17/32 inches. Corner construction shall consist of both SIGMA deep penetration welds and mechanical clip fastening. Glazing stops shall be of the snap-in type with neoprene bulb-type glazing for 1 inch insulated glass units, located on the non-security side of the door. No exposed screws shall be required to secure stops. Stops on exterior side shall be lock-in tamper proof type.

B. Framing. - The Kawneer "451T" framing system shall provide for flush glazing on all sides with no projecting stops. Vertical and horizontal members shall have a nominal face dimension of 2 inches, a nominal depth of 4 1/2 inches, and shall provide for 1 inch insulated glass units. All entrance framing members shall be weatherstripped.

1. Provide structural framing system at South Staircase Monitor as indicated in the

drawings. Structural framing system shall be designed to comply with design dead, live, and snow loads.

C. Weather-stripping: Provide Kawneer "Sealair" weather-stripping system in the doors and frames consisting of a dense, semi-rigid polymeric material which remains resilient and retains its weathering ability through temperature extremes. The system shall be provided with an EPDM blade gasket sweep strip attached to the door bottom with concealed fasteners. Weather-stripping and sweep shall be compatible with the threshold provided.

2.03 FINISH

All exposed members shall be free of scratches and other surface blemishes. All aluminum shall have fluoropolymer paint coating conforming to requirements of AAMA 605.2-92. Custom color will be selected.

2.04 HARDWARE

A. Hardware for aluminum entrance doors (including the interior vestibule doors) shall be furnished and installed by the door manufacturer except otherwise noted, and shall include the following hardware items by the manufacturers specified or approved equal.

1. Pivots shall be Rixson 195xM190 (with intermediate pivot).
2. Rim Exit Device shall be Von Duprin CD 98 x less pull x US 32D with cylinder and interchangeable core provided under Section 08700.
3. LCN Cush-N-Stop surface closer with adjustable hold open feature or approved equal by Russwin or Sargent.
4. Pull shall be Rockwood No. 158 x US 32D or approved equal by Brookline or Ives.
5. Aluminum threshold shall be supplied and installed under Section 08700.
6. Weatherstripping shall be continuous nylon pile insert type located at both jambs and head of the door frame by the frame manufacturer.
7. Door Bottom Weatherstripping shall be adjustable nylon brush type located at the bottom of the door by the door manufacturer.

B. Anchors and Fastenings: Furnish and install all bolts, nuts, anchors, sleeves and clips necessary for proper anchorage and support of aluminum work. All fastening devices shall be aluminum or non-magnetic stainless steel. Expansion bolts shall be stainless steel "Kwik-Bolts" as manufactured by Hilti Fastening Systems or approved equal.

C. Brackets and Reinforcements: Manufacturer's standard high-strength aluminum units where feasible, otherwise nonmagnetic stainless steel; except, at fabricator's option, brackets not exposed to weather or abrasion may be hot-dip galvanized steel complying with ASTM A 386. Provide nonstaining, nonferrous shims for installation and alignment of metal work.

D. Concealed Flashing: Non-magnetic stainless steel, 26 gage, type selected by manufacturer for compatibility.

PART 3 - EXECUTION

3.01 INSPECTION AND PREPARATION

Furnish inserts at proper times for setting in concrete formwork, masonry, and similar construction indicated to support work of this Section.

3.02 INSTALLATION/ERECTION

A. General: Comply with manufacturer's instructions for protection, handling and installation of the door, fabricated components, and hardware with particular attention and care to the preservation of applied finishes and to provide a weathertight installation. Discard and/or remove and replace damaged members immediately upon discovery.

B. Framing Erection: Install components plumb, level, accurately aligned and accurately located. Anchor components securely in place in the manner indicated on the approved shop drawings, shimming and allowing for required movement, and providing separators and insulators to prevent corrosion and electrolytic deterioration, and to prevent "freeze-up" of moving joints.

C. Installation of Door and Finish Hardware:

1. Make sure that the door, frame and transom are properly installed with square corners, plumb sides, level at the head, securely attached to surrounding construction and of the size and hand shown on the Drawings. Do not install the door in an improperly installed frame.

2. Door openings shall not have more than the clearance specified by the manufacturer at sides, top, and bottom.

3. Apply finish hardware in strict accordance with the final approved shop drawings and the manufacturers' instructions. Use care not to damage adjacent surfaces when installing hardware. Adjust door to be in exact alignment and hardware for easy action. Set all screws flush with the metal surface without any broken or damaged heads.

D. Dissimilar Contact Surfaces:

1. Metals - Where aluminum is placed in contact with any metal other than non-magnetic stainless steel, the aluminum contact surface shall be given a heavy brush coating of zinc chromate primer made with a synthetic resin vehicle followed by two coats of an aluminum metal paint or shall be separated with an approved non-absorptive tape or gasket.

2. Masonry - Aluminum placed in contact with masonry, mortar or concrete shall be given a heavy brush coating of an approved alkali-resistant, non-migrating, bituminous paint.

E. Sealants and Joint Fillers: Furnish and install in accordance with Section 07900, Joint Sealers.

F. Glazing: Provided under Section 08800, Glass and Glazing.

3.03 ADJUST AND CLEAN

A. Just prior to the completion of all work under this section, the Contractor, with the Engineer, shall inspect all portions of the work, and shall make all required adjustments and corrections to the work, leaving all operable portions in proper operating condition and insuring that all jointing is tight. In addition, each piece of finish hardware shall be inspected to see that it is undamaged and in perfect working order.

B. Clean completed work, inside and out, promptly after erection to the Engineer's satisfaction. Remove dirt and other substances from aluminum and other affected surfaces.

C. Remove protective coating (if any) when completion of construction activities no longer requires its retention. Removal shall be in accordance with manufacturer's instructions.

D. Perform minor touch-up work to members with finish damage to the Engineer's satisfaction. Should the Engineer, as sole judge of acceptability of repairs, deem a repair as unsatisfactory, the Contractor shall promptly remove and replace such damaged members at no additional cost.

E. Institute protective measures and other precautions required to assure that all metal work and doors will be without damage or deterioration, other than normal weathering, at time of acceptance.

END OF SECTION

SECTION 08500

ALUMINUM WINDOWS

PART 1 - GENERAL

1.01 RELATED DOCUMENTS

A. Examine Drawings, Contract Conditions all other Sections of the Specifications for requirements which affect work of this Section whether or not such work is specifically mentioned in this Section.

B. Coordinate work with that of all other trades affecting, or affected by work of this Section. Cooperate with such trades to assure the steady progress of all Project work.

1.02 DESCRIPTION

A. The work in this section consists of furnishing all materials, equipment, supplies, transportation, labor and supervision, and performing all operations required to furnish and install, weathertight, all aluminum windows (fixed), including insulating glass and insulated glass/aluminum spandrel panels, as shown on the Drawings, as specified herein, and as is additionally required to properly complete the work.

B. Related sealant and glass and glazing work are included as part of the work of this section and shall be provided in accordance with the requirements of Sections 07900 and 08800, respectively.

1.03 GENERAL

A. The Contractor shall verify all measurements at the building site and shall be responsible for dimensions, fitting, and the proper attachment of items related to the aluminum windows. Windows shall be of the type indicated. Window units shall be factory fabricated insofar as possible, consisting of, as applicable, frame, sash, sills, panning, weather-stripping, hardware, mullions, insulating glass, insulated glass/aluminum spandrels, sealants and anchors.

B. Storage and Protection: Materials shall be stored out of contact with the ground and under a weathertight covering. Storage shall be arranged to avoid bending, warping, or otherwise damaging the materials and to provide adequate ventilation.

C. Window frames, sashes, mullions, panning, etc., shown on the Drawings are Sealair, Series 8225T-L Thermal Lanced Fixed Windows manufactured by Kawneer Co., Inc. Similar thermal-break windows by other reputable manufacturers will be considered provided they meet or exceed the requirements of the Kawneer windows specified. The Contractor shall obtain preliminary approval of the manufacturer's stock details from the Resident before complete shop drawings are prepared. Final approval will be based upon complete shop drawings showing all features of window fabrication and conditions of installation as detailed on the Drawings. All detailed requirements must be met.

D. Performance Requirements: Windows shall exceed the current specifications of the Architectural Aluminum Manufacturers Association (AAMA) and shall bear the Quality Certified Seal of AAMA for PA3-A3HP.

1.04 SUBMITTALS

A. Submit eight (8) copies of product data for all materials and shop drawings to the Engineer for approval. Shop drawings shall indicate the location and elevation of each type of window and shall show type and, locations of sealants, details of construction, including insulated glass/aluminum spandrel panels, glazing, anchorages, methods of assembly, and installation of all components.

B. Submit two (2) sets of 12 inch long samples of extrusions and formed shapes. Include 3 or more samples in each set showing near-limits of variations in color and finish. Once approved, samples will establish the extreme variation in color acceptable.

PART 2 - MATERIALS

2.01 GENERAL

A. Frames unless otherwise noted shall be fabricated from extruded aluminum sections incorporating a continuous rigid polyurethane thermal barrier (break). Members shall not be less than 2-1/4 inches deep from front to back. Face dimensions of frames and ventilators shall be approximately 2-1/16 inches; webs and flanges shall be not less than .090 inch thick.

B. Glass: Shall be 1" insulating units as specified in Section 08800, Glass and Glazing.

C. Insulated Glass/Aluminum Spandrel Panels: Shall be as specified in Section 08800, Glass and Glazing, approximately 1 inch thick consisting of rigid extruded polystyrene insulation permanently bonded between 1/4 inch spandrel glass and 0.125 inch thick 6063-T52 leveled, painted smooth surface aluminum sheets. Units shall be designed for installation in the same manner as the insulating glass units.

D. Sealants: Shall be as specified in Section 07900, Joint Sealers.

2.02 CONSTRUCTION

A. Fabricate aluminum windows in accordance with the approved shop drawings.

B. All joints in aluminum framing shall be hairline and mechanically fastened.

C. The back wall of the polyurethane pocket shall be removed to form a thermal barrier system. There shall be no frame members, corner construction or hardware application that bridges or violates the thermal barrier in any way.

D. Special acrylic or butyl small-joint sealer shall be applied at all intersections to provide permanent watertight joints. Sections shall be designed to provide a flush

condition of frame and vent members on the exterior and to position all glass in the same vertical plane.

2.03 GLAZING

Windows shall be arranged for inside glazing with aluminum extruded snap-in glazing beads designed to accommodate 1 inch insulating glass units and 1 inch insulated spandrel panels. Snap-in glazing beads shall securely interlock into the extruded window sections without extending underneath the glass or spandrel panel, or bridging the thermal barrier. Glazing rabbet legs shall be a minimum of 3/4 inches in height.

2.04 FINISH

All exposed aluminum for windows, spandrel panel facings, sills, panning, and flashing shall have a fluoropolymer paint coating conforming to requirements of AAMA 605.2-92. Custom color will be selected to match aluminum storefront framing and door specified in Section 08400.

PART 3 - EXECUTION

3.01 INSTALLATION

A. Windows shall be installed in strict accordance with the approved shop drawings and the manufacturer's approved installation instructions, without forcing or distortion so that sills and heads are level and jambs are plumb. Window frames shall be securely anchored in place with heavy gauge anchors, four (4) per jamb.

B. Glass units and spandrel panels shall be furnished, installed and cleaned in accordance with the applicable requirements of Section 08800, Glass and Glazing.

C. Sealants shall be furnished and installed in accordance with the requirements of Section 07900, Joint Sealers.

3.02 ADJUSTMENT AND CLEANING

A. After installation, glass and metal surfaces shall be cleaned and any staining or discoloring of the finish shall be restored to the Engineer's satisfaction or the unit shall be replaced at no additional cost. All other work detrimentally affected by the installation of the windows shall also be cleaned or otherwise restored to the Resident's satisfaction.

END OF SECTION

SECTION 08700

FINISH HARDWARE

PART 1 - GENERAL

1.01 RELATED DOCUMENTS

A. Examine Drawings, Contract Conditions all other Sections of the Specifications for requirements which affect work of this Section whether or not such work is specifically mentioned in this Section.

B. Coordinate work with that of all other trades affecting, or affected by work of this Section. Cooperate with such trades to assure the steady progress of all Project work.

1.02 DESCRIPTION

The work in this section consists of furnishing all labor, materials, equipment and transportation and performing all operations required to furnish all finish hardware as shown on the drawings and specified herein.

1.03 SPECIFIED ELSEWHERE

A. The following related work items shall be furnished and installed under other sections of these specifications as indicated.

Hardware for Aluminum Entrance Door - Section 08400.

1.04 GENERAL

A. No finish hardware shall be delivered until all operations causing dampness have been completed. Care shall be taken to protect hardware from scratching and foreign matter, such as paint, joint compound, etc.

B. All items of hardware shall be packed in approved manufacturers' containers with all trimmings, bolts, screws, etc., as required. Each container shall be accurately labeled and marked with an item location corresponding to the number listed on the approved Finish Hardware Schedule.

C. Strikes for locks shall be box type with sufficient lip protection to protect frames and trim.

D. All locks shall be construction master keyed. Four (4) construction master keys shall be furnished. All locks shall be set to new building master keys as directed by the Resident. Furnish six (6) master keys and two keys for each lock.

E. Where size or shape of members is such as to prevent the use of the types specified, hardware shall be furnished of suitable type having as near as practicable the same

operation and quality as the specified type; sized to be adequate for the required service, and approved by the Engineer.

1.05 SUBMITTALS

As part of the submission of shop drawings, the Contractor shall submit to the Engineer for review eight (8) copies of the schedule of finish hardware to be provided, giving manufacturers' names, catalog number references, type numbers, finish, and location of each item of hardware (identified with the door for which it is intended), and also the catalog cuts for each hardware item.

PART 2 - MATERIALS

2.01 MATERIALS

A. All finish hardware shall be of the best grade of solid metal, entirely free from imperfections in manufacture and finish. Finish shall be US 26D Satin Chromium Plated and US 32D Satin Stainless Steel, as applicable. Door closer units shall have sprayed lacquer finish to match balance of hardware.

B. The following items and manufacturers thereof indicate the quality and design of the hardware required.

1. Thresholds shall be of a style approved by the Resident, manufactured by Reese, National Guard or Pemko. All exterior doors shall have an extruded aluminum threshold with an integral slip-resistant surface set in sealant to provide watertight condition. Thresholds shall be secured to floor construction with suitable stainless steel flat head screws in expansion shields. Slip-resistant coating shall be equal to "PemKote" by Pemko. If size is not shown, provided threshold width equal to jamb depth.

Threshold - Type A:	Pemko 171A w/PemKote
Threshold - Type B:	Pemko 270A and 282A, each with 1/4" high w/PemKote.

2. Locksets shall Best Lock 35H x 16H x L x US 32D with anti-friction latch bolts and interchangeable cores. Function will be determined at time of hardware submittal by the Resident at no additional cost.
3. Exit Device and Pull: Refer to Section 08400.

2.02 FINISH HARDWARE SCHEDULE

SET NO. 1

For Door No. 101 & 102 (Aluminum Entrance Door)
Provide 1 cylinder and core
Provide 1 threshold

PART 3 - EXECUTION

3.01 INSTALLATION

A. Hardware shall be installed accurately in accordance with the manufacturers' templates and approved instructions.

B. All Panic devices, pulls and other hardware shall be installed in accordance with the requirements of ANSI A117 and ADAAG.

END OF SECTION

SECTION 08800

GLASS AND GLAZING

PART 1 - GENERAL

1.01 RELATED DOCUMENTS

A. Examine Drawings, Contract Conditions all other Sections of the Specifications for requirements which affect work of this Section whether or not such work is specifically mentioned in this Section.

B. Coordinate work with that of all other trades affecting, or affected by work of this Section. Cooperate with such trades to assure the steady progress of all Project work.

1.02 DESCRIPTION

A. The term "glass" includes prime, processed and fabricated glass products. "Glazing" includes glass installation and all materials used to install glass. Types of work include glass and glazing for:

1. Exterior aluminum entrance door and associated transom.
2. Glass for aluminum windows, including spandrel panels.

1.03 QUALITY ASSURANCE

A. Prime Glass Standard: Comply with FS DD-G-451.

B. Heat Strengthened and Fully Tempered Glass Standard: FS DD-G-1403.

C. Safety Standards for Hazardous Locations: Conform to requirements of Building Code which applies to the Project and to all local ordinances and regulations.

1.04 SUBMITTALS

A. Submit 2 samples, 12 inches square, of each glass type specified. Submit 12 inch lengths of installed (mocked-up) glazing systems including metal framing and sealant components. Submit insulating glass samples with completed edge seal construction. Hermetic seal need not be maintained.

B. Submit eight (8) copies of manufacturer's specifications, product information sheets, warranties, and installation instructions and recommendations.

1.05 JOB CONDITIONS

Meet with glazier and other trades affected by glass installation prior to beginning of installation. Do not perform work under adverse weather or job conditions. Install liquid sealants only when temperatures are within lower or middle third of temperature range recommended by manufacturer.

1.06 SPECIFIED PRODUCT WARRANTY

A. Provide insulating glass manufacturer's written warranty, agreeing to, within specified warranty period, furnish FOB project site, replacement units for insulating glass units which have defective hermetic seals (excluding that due to glass breakage); defined to include intrusion of moisture or dirt, internal condensation at temperatures above -20°F (-31°C), deterioration of internal glass coatings, and other visual evidence of seal failure or performance failure; provided manufacturer's instructions for handling, installing, protecting and maintaining units have been adhered to during warranty period.

B. Warranty period is 10 years after seal date permanently imprinted on units, but in no case less than 9 years after the date of substantial completion.

PART 2 - MATERIALS

2.01 ACCEPTABLE MANUFACTURERS

Subject to compliance with requirements, manufacturers offering products which may be incorporated in the work include, but are not limited to, the following:

Viracon
PPG Industries, Inc.
Guardian Industries
Ford Glass Company

2.02 PRIME GLASS

Float Glass: Type I, Quality q3, clear or tinted glass as indicated.

2.03 PROCESSED GLASS

Tempered Glass: Provide clear or tinted glass as indicated, which has been heat treated to strengthen glass in bending to not less than 4.5 times annealed strength. Tong marks shall not be visible in glass after it is glazed in openings. Glass shall be of the thicknesses indicated, equal to Viracon Tempered Glass. Color will be selected by the Architect.

2.04 FABRICATED GLASS UNITS

A. Tinted Sealant-Edged Insulating Glass: Provide manufacturer's standard double-pane with a seal classification of "A" as tested and certified by IGCC, with a permanent hermetically sealed, dry air or gas filled space of width indicated, dual-sealed edge construction, edge seal consisting of twin primary sealant beads of polyisobutylene, positioned and retained by tubular aluminum spacer bar. Provide manufacturer's standard protective, rust resistant metal edge banding on insulating glass units, labeled with fabricator's name and date of seal. Units shall be equal to Viracon Insulated Glass. Color will be blue.

2.05 GLASS TYPES

Provide the following glass types as indicated in the Glazing Schedule:

Type A - 1 inch insulated: 1/4 inch tinted exterior light, 1/2 inch desiccated air space, 1/4 inch interior light.

Type B - Insulated Glass/Aluminum Spandrel Panels: Shall be approximately 1 inch thick consisting of rigid extruded polystyrene insulation permanently bonded between 1/4 inch spandrel glass and 0.125 inch thick 6063-T52 leveled, painted smooth aluminum sheets. Spandrel glass shall be equal to "Viraspan" by Viracon in a blue color to match, insofar as possible, the color of adjacent vision lights as viewed from the exterior. Finish of aluminum shall be painted. Color will be selected by the Architect.

Type C - Same as Type A but both lights tempered.

Type D - 1 inch thick insulated metal panel (provided under Section 10200).

2.06 GLAZING SEALANTS AND COMPOUNDS

Provide color of exposed sealant/compound as selected by Engineer from manufacturer's standard colors. Comply with manufacturer's recommendations for selection of hardness, depending upon the location of each application, conditions at time of installation, and performance requirements. Carefully select materials for compatibility with surfaces contacted in the installation.

2.07 GLAZING GASKETS

A. Molded Neoprene Glazing Gaskets: Molded or extruded neoprene gaskets of the profile and hardness required for watertight construction. Glazing gaskets shall be standard for the glass framing systems supplied and shall be purchased from the frame manufacturer unless otherwise approved.

B. Vinyl Foam Glazing Tape: Closed cell, flexible, self-adhesive, non-extruding, polyvinyl chloride foam tape; recommended by manufacturer for exterior, exposed, watertight installation of glass, with only nominal pressure in the glazing channel; complying to ASTM D 1667.

2.08 MISCELLANEOUS GLAZING MATERIALS

A. Cleaners, Primers and Sealers: Type recommended by sealant and gasket manufacturers.

B. Setting Blocks: Neoprene or EPDM, 70-90 durometer hardness, with proven compatibility with sealants used.

C. Spacers: Neoprene or EPDM, 40-50 durometer hardness, with proven compatibility with sealants used.

D. Compressible Filler (Rod): Closed cell or waterproof-jacketed rod stock of synthetic rubber or plastic foam, proven to be compatible with sealants used, flexible and resilient, with 5-10 psi compression strength for 25% deflection.

PART 3 - EXECUTION

3.01 STANDARDS AND PERFORMANCE

A. Watertight and airtight installation of each piece of glass is required. Each installation must withstand normal temperature changes, wind loading, impact loading (for operating units) without failure, including loss or breakage of glass, failure of sealants or gaskets to remain watertight and airtight, deterioration of glazing materials and other defects.

B. Protect glass from edge damage during handling and installation, and subsequent operation of glazed components of the work. During installation, discard units with edge damage and other imperfections.

C. Glazing channel dimensions shown are intended to provide for necessary bite on glass, minimum edge clearance and adequate sealant thicknesses, with reasonable tolerances. Adjust as required by job conditions at time of installation.

D. Comply with combined recommendations and technical reports of manufacturers of glass and glazing products as used in each glazing application, and with recommendations of Flat Glass Marketing Association "Glazing Manual," except where more stringent requirements are indicated or specified.

E. Install insulating glass units to comply with recommendations by Sealed Insulating Glass Manufacturers Association, except as otherwise specifically indicated or recommended by glass and sealant manufacturers.

3.02 PREPARATION FOR GLAZING

A. Clean glazing channel and other framing members to receive glass immediately before glazing. Remove coatings which are not firmly bonded to substrate. Remove lacquer from metal surfaces where elastomeric sealants are used.

B. Apply primer or sealer to joint surfaces where recommended by sealant manufacturer.

3.03 GLAZING

A. Install setting blocks of proper size in sill rabbet, located 1/4 of the glass width from each corner. Set blocks in thin course of heel-bead compound.

B. Provide spacers inside and out, of proper size and spacing, for glass sizes larger than 50 united inches, except where gaskets or preshimmed tapes are used for glazing. Provide 1/8 inch minimum bite of spacers on glass and use thickness equal to sealant width, except with sealant tape use thickness slightly less than final compressed thickness of tape.

C. Set units of glass in each series with uniformity of pattern, draw, bow and similar characteristics.

D. Miter cut and bond ends together at corners where gaskets are used for channel glazing so that gaskets will not pull away from corners and result in voids or leaks in the glazing system.

3.04 CURING, PROTECTION AND CLEANING

A. Protect glass from breakage immediately upon installation. Do not apply markers to surfaces of glass. Remove non-permanent labels and clean surfaces. Cure sealants as necessary to provide high early strength and durability.

B. Remove and replace glass which is broken, chipped, cracked, abraded or damaged in other ways during the construction period, including natural causes, accidents and vandalism.

C. Wash and polish glass on both faces not more than 4 days prior to date scheduled for inspection intended to establish date of Substantial Completion. Comply with glass manufacturers' recommendations for final cleaning.

END OF SECTION

SECTION 09900

PAINTING

PART 1 - GENERAL

1.01 RELATED DOCUMENTS

A. Examine Drawings, Contract Conditions all other Sections of the Specifications for requirements which affect work of this Section whether or not such work is specifically mentioned in this Section.

B. Coordinate work with that of all other trades affecting, or affected by work of this Section. Cooperate with such trades to assure the steady progress of all Project work.

1.02 DESCRIPTION

A. The work includes furnishing all materials, equipment, tools, supplies, transportation, staging, drop cloths, wet-paint signs, labor and supervision, etc., and performing all operations required for interior and exterior "on site" painting as noted on the Drawings, as described herein, and as is additionally required to properly complete the work.

B. Unless otherwise indicated in the Paint Schedule, prepare surfaces and apply the number of coats scheduled herein regardless of shop or field coats specified elsewhere. Surface preparation and touch-up of shop coats is included in the work.

C. In general, it is intended that all non-shop finished exposed surfaces throughout the interior and exterior of the building be painted as described herein and as indicated on the Drawings.

1. Except as otherwise noted or directed by the Architect, the following are not to be painted: bronze; stainless steel; aluminum and other non-ferrous metals; prefinished metals; concrete sidewalks; finish hardware; glass and glazing materials; lighting units and pipes, ducts, conduit, insulation, etc., in mechanical rooms except where they abut surfaces scheduled to be painted.
2. Except as otherwise noted, paint all exposed structural steel and miscellaneous metals, interior and exterior; all exterior woodwork; back-priming all exterior woodwork; (except where finish painted by the manufacturer or specifically excluded by this specification, the Drawings or the Architect).

D. The Contractor shall perform all work in accordance with this Specification Section and shall complete all incidental details, whether or not such details are specified herein, as is required to produce thoroughly finish painted work of the best quality.

PART 2 - PRODUCTS

2.01 MATERIALS

A. All paints and associated materials shall be first quality products manufactured by the following companies:

Benjamin Moore
Devoe
Tnemec Company, Inc.
Sherwin Williams

B. Insofar as possible, paints used for this Contract shall be produced by a single manufacturer.

C. All materials used in the work are to be of the best of their brand or class, brought to the site in original unopened containers. Containers of materials must have original labels intact in order to be accepted for use on the Project. Driers, thinners and solvents shall be as recommended by the manufacturer of the paint being used.

D. No claim as to the unsuitability of any material used will be considered unless such claim is made in writing before the materials are approved by the Resident. By submitting a product for approval, the Contractor assumes complete responsibility for the suitability of the paint and for the results obtained therewith.

E. The Schedule of Painting listed herein designates specific manufacturers to denote the standard of quality and the type of finish desired. Materials of other manufacturers listed above shall be submitted to the Engineer for approval prior to purchase of any materials. Requests for substitution shall list the material specified and the specific material being offered as a substitute, including appropriate supportive technical data.

2.02 COLORS AND FINISHES

A. All colors and finishes shall be as selected and/or scheduled by the Architect. Prepare for approval by the Architect, two (2) panels for each color and finish selected (i.e., semi-gloss, flat, etc.). Submit these samples at least 3 weeks in advance of the date scheduled for beginning painting work.

B. Panels shall be at least 12 inches by 12 inches.

C. Approved samples shall be kept in the Contractor's field office for reference for the duration of the painting work.

2.03 GENERAL REQUIREMENTS

A. Inspect all surfaces requiring painter's finish and remedy all remaining defects.

B. All surfaces to be painted shall receive a prime coat and two finish coats, unless otherwise noted.

C. Take adequate precautions for protection against soiling and damage to adjacent equipment, structures, and surfaces. Protect floors, paved areas and all other adjacent surfaces against spatter and spillage. Leave and maintain protection in place until all final painting has been performed and approved in the affected area.

D. Erect, maintain and dismantle scaffolding and access equipment without damage to structures, machinery, pipes, etc.

E. Store rags, cleaning cloths, and waste materials smeared or contaminated with paint, oils, solvents, and other flammable materials in approved covered metal containers and remove them from buildings and dispose of them off-site after each shift and as otherwise directed by the Resident.

F. Take precautions so that surface preparation, including dust blow-off, does not do any damage. With the approval of the Resident, equipment, machinery and items that could be damaged by grit and dust may be masked and sealed dust-tight in a suitable manner. Take precautions so that grit and dust does not fall on surfaces ready for painting or onto newly painted surfaces.

G. As necessary, remove solvent and paint fumes by suitable means.

H. Do not perform spray painting in areas where welding is in progress nor near operations involving open flames, sparks or high heat.

I. Do not perform painting near or on energized electrical equipment or rotating equipment without proper precautions being taken nor until approval to proceed is received from the Engineer.

J. Take all necessary precautions to ensure that paint is not introduced into working parts of equipment, machinery, filters, motors, controls, etc. Where the indicated application method may cause damage, notify the Resident so that the Resident and manufacturer can agree on an alternate method of application.

K. Mask and otherwise protect nameplates, gauges, glass, fire rating labels, instructions, lubrication fittings, instruments and similar items as necessary to retain their original conditions after completion of the painting work. Remove protection after painting is completed.

L. Follow the manufacturers' recommendations and OSHA regulations regarding precautions and protective clothing and equipment to be used by painters.

M. Adequately provide for the proper electric and static grounding of spray equipment, of items being painted and other static-producing equipment and electrical tools. The motors on painting and coating related equipment shall be explosion proof. Supply all ventilation equipment, respirators, safety lines, and eye, face, head and body protection.

N. The Contractor shall be responsible for all damage done to other work and for repairing same to the satisfaction of the Engineer. Replace all materials damaged to such an extent that they cannot be restored to their original condition. This work shall be done at the Contractor's expense.

2.04 SUBMITTALS

Submit 8 copies of the manufacturers' technical information including paint label analysis and application instructions for each material proposed for use.

2.05 DELIVERY AND STORAGE

A. Deliver all materials to the jobsite in original, new and unopened packages and containers bearing the manufacturer's name and label. Technical data sheets covering use of the product shall be included with every consignment delivered. Each container shall bear the label of the manufacturer and be clearly marked in a durable manner to show the following information:

1. Type of paint by generic description.
2. Manufacturer's paint name and reference number.
3. Gross and net weights and/or volumes.
4. Date of manufacture and shelf-life.
5. Recommended thinner and mix ratios.
6. Recommended safety precautions and antidotes in case of contact or ingestion.

B. Store materials in an enclosed, protected storage area with provisions for maintaining the materials in storage at not less than 60°F nor more than 95°F unless more restrictive temperatures are required by the paint manufacturer to guarantee shelf-life. Provide adequate ventilation in storage areas. No paint stored longer than the manufacturer's specified shelf-life shall be used in the work. Keep the storage space neat and clean and repair all damage to the space and surroundings.

PART 3 - EXECUTION

3.01 APPLICATION CONDITIONS

A. Apply water-base paints only when the temperature of the surface to be painted and the surrounding air temperature is between 50°F and 90°F., unless otherwise permitted by the paint manufacturers' printed instructions.

B. Apply solvent thinned paints only when the temperature of the surface to be painted and the surrounding air temperature is between 45° and 95°F., unless otherwise permitted by the paint manufacturers' printed instructions.

C. Do not apply paint in snow, rain, fog or mist, or when the relative humidity exceeds 85%. Do not apply paint to damp or wet surfaces nor when the temperature of the surface to be painted is lower than the corresponding wet-bulb temperature for the

existing air temperature and relative humidity, unless otherwise permitted by the paint manufacturers' printed instructions.

D. Continue painting during inclement weather only if the areas and surfaces to be painted are enclosed and maintained within the temperature and humidity limits specified by the paint manufacturer during both the application and drying periods.

E. Do not perform exterior painting when windblown dust or debris may contaminate the work. Isolate interior painting areas as required to prevent dust circulation. Provide temporary closures where isolation cannot be effected by closing doors and windows.

F. Prepare trial coats as requested by the Resident for coats differing in color, shade, application method, etc.

G. Each coat of paint must be dry before the succeeding coat is applied or any surface preparation (i.e., sandpapering) is done.

H. Perform painting and finishing in the best and most workmanlike manner known to the trade. No paint shall be applied by other than skilled workmen. All surfaces are to be left smooth, even and free from brush marks and visible paint laps. If surfaces are not thoroughly covered, apply additional coats or otherwise remedy problems until finished surfaces are of an acceptable uniform color, texture and sheen, at no additional cost.

I. Provide specified and approved finish coats which are compatible with prime paints. Review other sections of these specifications in which prime paints are to be provided to ensure compatibility of total coating system for various substrates. Upon request from other trades, furnish information on the characteristics of finish materials proposed for use to ensure that compatible prime coats are used. Provide barrier coats over incompatible primers or remove primer and reprime as required. Notify the Resident in writing of any anticipated problems using the specified coating systems over substrates primed by others.

J. If a prime coat does not dry to a uniform sheen over the entire surface, spot prime the areas that indicate suction before applying the finish coat.

K. After the first coat is applied, if the surface is not smooth, sand and refinish it.

L. Maintain a record, in a form approved by the Resident, of all painting work performed. Indicate on the record the locations and types of surfaces painted, manufacturers' stock numbers, color numbers, quantity of each paint type applied, surface preparation, and the number and mil thickness of each coat applied.

3.02 INSPECTION

A. Examine the areas and conditions under which painting work is to be applied and notify the Resident in writing of conditions detrimental to the proper and timely

completion of the work. Do not proceed with the work until unsatisfactory conditions have been corrected.

B. Commencement of painting work will be construed as the Contractor's acceptance of the surfaces and conditions within that particular area.

3.03 SURFACE PREPARATION

A. General:

1. Perform surface preparation and cleaning procedures in strict accordance with the paint manufacturers' instructions and recommendations, and as is additionally specified herein.
2. Thoroughly inspect, clean and repair all surfaces which have received a shop coat of paint under other sections of the specifications prior to application of additional coats. Where shop primer has been damaged, the field painting work includes surface preparation and touch-up painting of abraded and otherwise defective primer, as well as priming of uncoated field welds, field bolting, and all other bare surfaces before application of the first field coat. Feather edges of sound primer into defective prime areas, bare field welds, etc., and apply touch-up paint to overlap the adjacent sound primer by at least 2 inches.
3. Provide non-damaging protection for all hardware, hardware accessories, machined surfaces, plates, and similar items in place which are not to be finish painted, prior to surface preparation and painting operations.
4. Clean all surfaces to be painted before applying paint or surface treatments. Remove oil and grease prior to mechanical cleaning. Schedule cleaning and painting operations so that contaminants from the cleaning process will not fall onto newly cleaned or newly painted surfaces.
5. Failure on the part of the Contractor to remedy surface imperfections that remain visible following the finish coat of paint shall be cause for rejection, solely at the discretion of the Engineer, and shall be considered due cause for refinishing the surface area involved by the Contractor, at no additional cost.
6. Cut out and fill with spackle or other approved compounds, all scratches, cracks, abrasions, etc., adjoining trim materials. Make all patches flush with adjoining surfaces and allow to dry and then properly seal before application of the prime coat. In general, interior caulking and sealants will be installed prior to start of field painting; however, certain sealants require that painting be applied first. It shall be the Contractor's responsibility to coordinate such work with the trades involved.

B. Specific Surface Preparation: The painting systems will indicate one or more of the following methods of surface preparation for each item or surface to be painted.

1. Solvent Cleaning: Cleaning in accordance with Steel Structures Painting Council (SSPC) Specification SP 1.
2. Alkaline Cleaning: Wash with weak alkaline solution consisting of 1 part trisodium phosphate to 32 parts of water, rinse thoroughly with clean, potable water, and dry.

3. Wood Surface: Perform alkaline cleaning to remove grease, oil, wax, etc. Remove alkali solution with water soaked wipers and then dry the surfaces. Smooth surface by fine sanding. Blunt sharp edges with light hand sanding. Seal knots and pitch streaks with shellac. For surfaces which are to receive an opaque finish, fill holes, cracks, etc., with a latex base compound and when hardened, sand smooth. In areas where the wood is to be stained, mix proper colored stain with the wood filler before application to ensure color match of the filler to surrounding woodwork. Do not apply paint or stain to unfinished wood having a moisture content of more than 10% (at a minimum 3/16 inch depth) as checked by a Painter's Moisture Register - Model 9.
4. Ferrous Metals: Clean iron and steel surfaces that have not been previously shop coated, and which do not require sand blasting, of rust and scale in accordance with Steel Structures Painting Council Specification SP-3, Power Tool Cleaning, prior to application of prime coat. Prior to mechanical cleaning, solvent or alkaline clean surfaces to remove oil, grease, and other contaminants. Clean surfaces the same day the surfaces are to be painted. Take special care to avoid burnishing surfaces by wire brushing.
5. Galvanized Surfaces: Solvent clean and scrub with scouring pads to remove all oil and "white rust". Follow by rinsing with clean, water soaked wipers, and then dry the surfaces. When required (i.e., prior to application of alkyd coatings), apply a "wash primer" in accordance with the paint manufacturers' recommendations.
6. Preparation for Touch-up Painting: Clean all field bolting, field welds, unprimed steel, and all other miscellaneous uncoated metal of rust, scale, welding contaminants, grease, oil and other foreign matter by alkaline and power tool cleaning. Remove all weld spatter, sharp edges and points by chipping and grinding. Remove damaged primer until sound primer is encountered. Feather the edge of paint surrounding damaged areas and overlap adjacent sound primer by at least 2 inches with touch-up primer.

3.04 MATERIALS PREPARATION

Mix and apply paint in compliance with the manufacturer's directions. Thoroughly stir paint materials until the ingredients therein are completely intermixed and, if necessary, strain prior to application. Do not mix any surface film into the paint. If required, use thinners furnished or recommended by the paint manufacturers for the specific materials and application conditions. Do not use thinner in excess of the manufacturer's recommendations. Proportion and prepare catalyzed paints in exact accordance with the manufacturer's directions. Make sure that personnel mixing paint are knowledgeable of the products being mixed.

3.05 APPLICATION

A. In general, the painting systems specifications indicate the required method of application; brush, roller or spray. Where spray equipment is required, the equipment and application pressures shall conform to the paint manufacturer's recommendations, and shall be subject to acceptance by the Engineer. Where the indicated application method is not feasible or appropriate, obtain the Engineer's acceptance of an alternate method. Bring to the attention of the Engineer all

discrepancies between these specifications and manufacturers' instructions and recommendations, and await the Engineer's decision of resolution before proceeding with the work in question. Where more than one method of application is given, use the method recommended by the manufacturer for the particular application.

B. Use only tools and equipment which are suitable, clean, in good condition, and recommended by the paint manufacturer. Spray equipment shall produce proper atomization and leave a satisfactory film on the surface. Do not leave brushes and rollers to harden before cleaning. Do not use paint mitts.

C. Apply paint as necessary to produce tough, durable and well-bonded films that will provide long-term protective performance and satisfactory appearance. Apply paint to produce a uniform thickness, free of defects such as pinholes, holidays, skips, missed areas, blistering, runs, sags, wrinkles, excessive film build-up, lack of film build-up, uneven film thickness, bubbles, cratering, cracking, crazing, poor adhesion, delamination, lifting, peeling, dry spray, overspray, excessively thinned coatings, contaminated coatings, flatting, orange peel, brush marks, solvent traps, and embedded dust and dirt.

D. Do not apply paint to a surface that has not been properly prepared, nor when the ambient and surface conditions are not satisfactory. Do not apply paint at humidities and temperatures that will cause blistering, porosity or be otherwise detrimental to the performance and life of the paint. Provide suitable air and surface thermometers, sling psychronometers, etc., at the jobsite as are essential for the work to monitor temperature and humidity conditions.

E. As paint application is in progress, check each coating frequently by means off suitable wet film thickness gauge to achieve the proper dry film thickness, taking in to account theoretical coverage versus actual coverage, as well as solvent loss.

F. Strictly adhere to the manufacturers' recoat time. Do not apply paint over undercoats which have not properly cured. Conversely, adequately and properly prepare surfaces of paints which have cured past their critical recoat time. Before painting, prepare and repair undercoats deteriorated from long exposure to the weather or other adverse conditions.

G. Use the cross-spray technique to insure uniform coverage, free of defects and missed areas. "Stripe paint" sharp edges to ensure proper build-up at the edges, prior to the application of the specified number of coats.

H. Do not force dry paint.

I. Protect newly painted surfaces from rain, condensation, dirt, debris, and other contamination until paint has cured.

J. Apply additional top coats when undercoats, stains and other conditions show through the final coat. Take care to insure that all surfaces, including edges, corners, crevices, welds, exposed fasteners, etc., receive a dry film thickness

equivalent to that of flat surfaces. To insure this, stripe or spot paint such areas first and then recoat as the remainder of the surface is being painted.

K. Paint surfaces behind movable equipment and furniture the same as similar exposed surfaces.

L. Paint interior surfaces of ducts that are visible through registers and grilles with an appropriate flat finish black paint.

M. Paint the back and sides of access panels and removable and hinged covers to match the exposed surfaces.

N. Finish tops and edges of exterior doors the same as the "pull" side faces.

O. Sand lightly between coats if recommended by the manufacturer.

P. If the dry film thickness at any of the inspection times is less than specified, apply an additional coat of the material specified, or increase the film thickness of the succeeding coat or coats, at the discretion of the Engineer, as required to ensure that the specified total dry film thickness for the finished work is obtained. Conceal all brush marks, laps, and joints between successive work days.

Q. Scheduling Painting:

1. Before applying paint, remove all dust, grit, loose rust particles, dirt, etc., from surfaces by vacuuming or blowing off with dry, oil-free air, as appropriate for the application.
2. Apply paint as soon as possible after the surfaces have been cleaned, pretreated, or otherwise prepared for painting, and before subsequent surface deterioration.
3. Allow sufficient time between coats to permit proper drying.

3.06 RETOUCHING

A. Touch-up all work painted under this Contract which, for any reason, has been damaged during construction work.

B. It is required that all finish work have acceptable surfaces when the building is ready for acceptance by the Engineer.

3.07 CLEAN-UP AND PROTECTION

A. Upon completion of painting work, clean all paint-spattered surfaces. Remove spattered paint by approved methods, using care not to scratch or otherwise damage finished surfaces.

B. Correct all damage caused by cleaning, repairing, replacing, and repainting, as acceptable to the Engineer.

C. Remove temporary protective wrappings provided by others for protection of their work after completion of painting operations.

3.08 "AS-BUILT" RECORD

Submit, for record purposes, a finish paint schedule for each area and surface receiving "painter's finish", indicating actual paints applied, including manufacturer, type, gloss, color blend, etc.

3.09 GUARANTEE

Give the Authority a written guarantee that the materials and workmanship are of the highest quality and that the paint will not discolor, fade, peel, chalk, craze, chip, alligator, etc., and that any work which becomes defective within one (1) year of acceptance of the work will be promptly made good by the Contractor to the satisfaction of the Authority without cost.

3.10 PAINT SYSTEMS AND SCHEDULE

A. The following paragraphs list the various paint systems to be used for the work, and most of the major items and surfaces requiring painting. The mention of specific items and surfaces to be painted shall not be construed as limiting the total number of items and surfaces that are to be painted. The intent of this section is to have all items and surfaces painted as specified for other materials in the same environment, except for those items which are specifically excluded.

B. Systems

1. System A - (Gloss Alkyd)

a. Surface Preparation: For bare metal, alkaline clean, Power Tool Clean and solvent clean in accordance with SSPC SP-3 and SSPC-SP-1.
b. Touch-up: Prepare damaged shop primer and galvanizing in accordance with touch-up specifications.
c. Prime Coat: Prime touch-up areas and bare metal with Tnemec Series 4 Versare Rust Inhibitive Primer. Repair damaged galvanizing with ZRC Cold Galvanizing Compound or equal, and prime all galvanizing with Tnemec 32-1210 Tneme-Grip.
d. Finish Coat: Two coats of Tnemec Series 2H Hi-Build Tneme-Gloss Alkyd Enamel; 2.5 to 3.5 dry mils each coat (spray, brush or roller applied).

2. System B – Exterior Plywood Soffit - Painted Finish (Semi-Gloss Alkyd):

a. Surface Preparation: Prepare surfaces in accordance with specifications for wood surfaces.
b. Primer Coat: Benjamin Moore Moorcraft Alkyd Enamel Underbody (247); 1.5 dry mils (spray, brush or roller applied).

c. Finish Coats: Two (2) coats of Benjamin Moore Impervo (133) Semi-Gloss Alkyd Enamel; 1.5 dry mils for each coat (spray, brush or roller applied).

C. Equipment:

In general, switchboards, disconnect switches, motors, light and power panels, etc., will be completely shop finished by the manufacturers. All equipment shall be touched-up by the installer where finish is damaged during installation.

3.11 PAINTING SCHEDULE

SURFACE SYSTEM

A. Interior

1. Concrete Walls
2. Concrete Floors (including equipment pads)

B. Exterior

1.	Metal	
	a.. Bollards	A
	b. Structural Steel for Canopy (Exposed)	A
2.	Wood	
	a. Soffit	B

<u>Note:</u> All colors will be custom colors as selected by the Engineer.

C. In general, miscellaneous brackets, angles, plates, etc., shall receive the same finish coats as the items to which they are associated. Surface preparation and prime coats shall be as specified for similar materials in the same space/environment or as otherwise directed by the Engineer.

D. In general, ductwork, piping and conduit running exposed on walls and ceilings (including attachment devices, supports, accessories, etc.) shall receive the same type finish coat as adjacent surfaces. Surface preparation and prime coats shall be as specified for similar materials in the same space/environment or as otherwise directed by the Engineer.

E. Prime galvanized steel and aluminum with Benjamin Moore Galvanized Metal Primer (155), or an approved equal, before applying finish coats.

END OF SECTION

SECTION 10200

MISCELLANEOUS

PART 1 - DESCRIPTION

1.01 RELATED DOCUMENTS

A. Examine Drawings, Contract Conditions all other Sections of the Specifications for requirements which affect work of this Section whether or not such work is specifically mentioned in this Section.

B. Coordinate work with that of all other trades affecting, or affected by work of this Section. Cooperate with such trades to assure the steady progress of all Project work.

1.02 DESCRIPTION

The work in this section consists of furnishing all materials, equipment, labor and supervision, and performing all operations required to furnish and install all miscellaneous items as shown on the Drawings, as specified herein, and as is additionally necessary to properly complete the work.

1.03 SHOP DRAWINGS

Submit eight (8) copies of shop drawings for louvers, cash drop unit, metal panels, flagpole and treadles. Submit eight (8) copies of catalog cuts for all items and materials supplied.

PART 2 - MATERIALS

2.01 INSULATED METAL PANELS

Insulated metal panels shall be faced on inside and outside with 18 gauge aluminum with painted finish. Custom color will be selected. Panels shall be 1 inch thick and composed of aluminum faced 1/8 inch thick hardboard stabilizers permanently bonded to an extruded polystyrene core. Anodized finish shall match that of aluminum frame.

PART 3 - EXECUTION

3.01 INSULATED METAL PANELS

Install insulated metal panels as shown on the approved shop drawings and in strict accordance with the manufacturers' instructions.

END OF SECTION

SECTION 10520

FIRE EXTINGUISHER

PART 1 - GENERAL

1.01 RELATED DOCUMENTS

A. Examine Drawings, Contract Conditions all other Sections of the Specifications for requirements which affect work of this Section whether or not such work is specifically mentioned in this Section.

B. Coordinate work with that of all other trades affecting, or affected by work of this Section. Cooperate with such trades to assure the steady progress of all Project work.

1.02 DESCRIPTION

The work in this section consists of furnishing all materials, equipment, transportation, labor and supervision, and performing all operations required to install all fire extinguishers and mounting brackets as shown on the Drawings, as specified herein, and as is additionally required to properly complete the work.

1.03 SUBMITTALS

Submit eight (8) copies of material brochures and installation instructions and details for approval.

1.04 GENERAL

A. Provide fire extinguishers, mounting brackets, and accessories manufactured by the same company.

B. Provide fire extinguishers which are U.L. listed and bear U.L. "Listing Mark" for type, rating and classification of extinguisher indicated. All fire extinguishers shall be rechargeable.

PART 2 - MATERIALS

2.01 PRODUCTS

A. Unless otherwise indicated, the fire extinguishers, brackets and accessories are as manufactured by J. L. Industries. Equivalent models manufactured by Ansul Co. or Walter Kidde and Co. are also acceptable.

B. Fire extinguishers shall be multi-purpose 10 lb. dry chemical for A, B & C fires, complete with an accurate pressure safety gauge, Model Cosmic 10E with Bracket No. MB 846.

1. Provide one fire extinguisher at the top landing of each stair.

PART 3 - EXECUTION

3.01 INSTALLATION

A. Install brackets and extinguishers in the locations indicated on the Drawings at mounting heights to comply with applicable regulations of governing authorities.

B. Securely fasten mounting brackets to structure, with proper reinforcement, square and plumb, to comply with manufacturer's approved installation instructions.

C. Check extinguishers for proper charge operations. Remove and replace damaged, defective and undercharged units.

END OF SECTION

SECTION 07531

EPDM MEMBRANE ROOFING

PART 1 - GENERAL

1.1 RELATED DOCUMENTS

A. Drawings and general provisions of the Contract, including General and Supplementary Conditions and Division 1 Specification Sections, apply to this Section.

1.2 SUMMARY

A. This Section includes the following:

1. Adhered membrane roofing system.
2. Substrate Board.

1.3 DEFINITIONS

A. Roofing Terminology: Refer to ASTM D 1079 and glossary of NRCA's "The NRCA Roofing and Waterproofing Manual" for definition of terms related to roofing work in this Section.

B. Design Uplift Pressure: The uplift pressure, calculated according to procedures in SPRI's "Wind Load Design Guide for Fully Adhered and Mechanically Fastened Roofing Systems," before multiplication by a safety factor.

C. Factored Design Uplift Pressure: The uplift pressure, calculated according to procedures in SPRI's "Wind Load Design Guide for Fully Adhered and Mechanically Fastened Roofing Systems," after multiplication by a safety factor.

1.4 PERFORMANCE REQUIREMENTS

A. General: Provide installed roofing membrane and base flashings that remain watertight; do not permit the passage of water; and resist specified uplift pressures, thermally induced movement, and exposure to weather without failure.

B. Material Compatibility: Provide roofing materials that are compatible with one another under conditions of service and application required, as demonstrated by roofing membrane manufacturer based on testing and field experience.

C. Roofing System Design: Provide a membrane roofing system that is identical to systems that have been successfully tested by a qualified testing and inspecting agency to resist uplift pressure calculated according to ASCE 7.

1.5 SUBMITTALS

A. Product Data: For each type of product indicated.

B. Shop Drawings: For roofing system. Include plans, elevations, sections, details, and attachments to other Work.

1. Base flashings and membrane terminations.

C. Samples for Verification: For the following products:

1. 12-by-12-inch square of sheet roofing, of color specified.
2. Six roof substrate board cover fasteners of each type, length, and finish.

D. Installer Certificates: Signed by roofing system manufacturer certifying that Installer is approved, authorized, or licensed by manufacturer to install roofing system.

E. Manufacturer Certificates: Signed by roofing manufacturer certifying that roofing system complies with requirements specified in "Performance Requirements" Article.

1. Submit evidence of meeting performance requirements.

F. Qualification Data: For Installer and manufacturer.

G. Maintenance Data: For roofing system to include in maintenance manuals.

H. Warranties: Special warranties specified in this Section.

I. Inspection Report: Copy of roofing system manufacturer's inspection report of completed roofing installation.

1.6 QUALITY ASSURANCE

A. Installer Qualifications: A qualified firm that is approved, authorized, or licensed by roofing system manufacturer to install manufacturer's product and that is eligible to receive manufacturer's warranty.

B. Source Limitations: Obtain components for membrane roofing system from same manufacturer as roofing membrane.

C. Preliminary Roofing Conference: Before starting roof deck construction, conduct conference at Project site. Comply with requirements for pre-installation conferences in Division 1 Section "Project Management and Coordination." Review methods and procedures related to roof deck construction and roofing system including, but not limited to, the following:

1. Meet with Owner; Architect; Owner's insurer if applicable; testing and inspecting agency representative; roofing Installer; roofing system manufacturer's representative; deck Installer; and installers whose work interfaces with or affects roofing, including installers of roof accessories and roof-mounted equipment.
2. Review methods and procedures related to roofing installation, including manufacturer's written instructions.
3. Examine deck substrate conditions and finishes for compliance with requirements, including flatness and fastening.
4. Review structural loading limitations of roof deck during and after roofing.
5. Review flashings, special roofing details, roof drainage, roof penetrations, equipment curbs, and condition of other construction that will affect roofing system.
6. Review governing regulations and requirements for insurance and certificates if applicable.
7. Review temporary protection requirements for roofing system during and after installation.

8. Review roof observation and repair procedures after roofing installation.

1.7 DELIVERY, STORAGE, AND HANDLING

A. Deliver roofing materials to Project site in original containers with seals unbroken and labeled with manufacturer's name, product brand name and type, date of manufacture, and directions for storing and mixing with other components.

B. Handle and store roofing materials and place equipment in a manner to avoid permanent deflection of deck.

1.8 PROJECT CONDITIONS

A. Weather Limitations: Proceed with installation only when existing and forecasted weather conditions permit roofing system to be installed according to manufacturer's written instructions and warranty requirements.

1.9 WARRANTY

A. Special Warranty: Manufacturer's standard form, without monetary limitation, in which manufacturer agrees to repair or replace components of membrane roofing system that fail in materials or workmanship within specified warranty period. Failure includes roof leaks.

Warranty Period: 15 years from date of Substantial Completion.

B. Special Project Warranty: Submit roofing Installer's warranty, on warranty form at end of this Section, signed by Installer, covering Work of this Section, including all components of membrane roofing system such as roofing membrane, flashing, fasteners, substrate boards, for the following warranty period:

Warranty Period: Two years from date of Substantial Completion.

PART 2 - PRODUCTS

2.1 MANUFACTURERS

A. In other Part 2 articles where subparagraph titles below introduce lists, the following requirements apply for product selection:

1. Available Manufacturers: Subject to compliance with requirements, manufacturers offering products that may be incorporated into the Work include, but are not limited to, the manufacturers specified.

2.2 EPDM ROOFING MEMBRANE

A. EPDM Roofing Membrane: ASTM D 4637, Type I, nonreinforced or II, scrim or fabric internally reinforced uniform, flexible sheet made from EPDM, and as follows:

1. Manufacturers:

a. Carlisle SynTec Incorporated.
b. Celotex Corporation.
c. Firestone Building Products Company.
d. GenFlex Roofing Systems.

e. Johns Manville International, Inc.

2. Thickness: 45 mils, nominal.
3. Exposed Face Color: White.

2.3 AUXILIARY MATERIALS

A. General: Auxiliary materials recommended by roofing system manufacturer for intended use and compatible with membrane roofing.

1. Liquid-type auxiliary materials shall meet VOC limits of authorities having jurisdiction.

B. Bonding Adhesive: Manufacturer's standard bonding adhesive.

C. Cold Fluid-Applied Membrane Adhesive: Manufacturer's standard cold fluid-applied bonding adhesive formulated to adhere fleece-backed roofing membrane to substrate.

D. Lap Sealant: Manufacturer's standard single-component sealant, color to match roofing membrane.

E. Water Cutoff Mastic: Manufacturer's standard butyl mastic sealant.

F. Miscellaneous Accessories: Provide pourable sealers, preformed cone and vent sheet flashings, preformed inside and outside corner sheet flashings, T-joint covers, in-seam sealants, termination reglets, cover strips, and other accessories.

2.4 SUBSTRATE BOARDS

A. Substrate Board: ASTM C 1177/C 1177M, glass-mat, water-resistant gypsum substrate, 1/2 inch thick.

1. Product: Subject to compliance with requirements, provide "Dens-Deck" manufactured by Georgia-Pacific Corporation.

B. Fasteners: Factory-coated steel fasteners and metal or plastic plates meeting corrosion-resistance provisions in FMG 4470, designed for fastening substrate panel to roof deck.

PART 3 - EXECUTION

3.1 EXAMINATION

A. Examine substrates, areas, and conditions, with Installer present, for compliance with the following requirements and other conditions affecting performance of roofing system:

1. Verify that roof openings and penetrations are in place and set and braced.
2. Verify that wood blocking, curbs, and nailers are securely anchored to roof deck at penetrations and terminations and that nailers match thicknesses of insulation.
3. Verify that surface plane flatness and fastening of steel roof deck complies with requirements in Division 5 Section "Steel Deck."
4. Proceed with installation only after unsatisfactory conditions have been corrected.

3.2 PREPARATION

A. Clean substrate of dust, debris, moisture, and other substances detrimental to roofing installation according to roofing system manufacturer's written instructions. Remove sharp projections.

B. Complete terminations and base flashings and provide temporary seals to prevent water from entering completed sections of roofing system at the end of the workday or when rain is forecast. Remove and discard temporary seals before beginning work on adjoining roofing.

3.3 SUBSTRATE BOARD

A. Install substrate board with long joints in continuous straight lines, perpendicular to roof slopes with end joints staggered between rows. Tightly butt substrate boards together.

1. Fasten substrate board to top flanges of steel deck according to recommendations in FMG's "Approval Guide" for specified Windstorm Resistance Classification.
2. Fasten substrate board to top flanges of steel deck to resist uplift pressure at corners, perimeter, and field of roof according to membrane roofing system manufacturers' written instructions.

3.4 ADHERED ROOFING MEMBRANE INSTALLATION

A. Install roofing membrane over area to receive roofing according to membrane roofing system manufacturer's written instructions. Unroll roofing membrane and allow to relax before installing.

B. Start installation of roofing membrane in presence of membrane roofing system manufacturer's technical personnel.

C. Accurately align roofing membrane and maintain uniform side and end laps of minimum dimensions required by manufacturer. Stagger end laps.

D. Bonding Adhesive: Apply bonding adhesive to substrate and underside of roofing membrane at rate required by manufacturer and allow to partially dry before installing roofing membrane. Do not apply bonding adhesive to splice area of roofing membrane.

E. Repair tears, voids, and lapped seams in roofing that does not meet requirements.

3.5 FIELD QUALITY CONTROL

A. Testing Agency: Owner will engage a qualified independent testing and inspecting agency to perform roof tests and inspections and to prepare test reports.

B. Final Roof Inspection: Arrange for roofing system manufacturer's technical personnel to inspect roofing installation on completion and submit report to Architect.

Notify Architect or Owner 48 hours in advance of date and time of inspection.

C. Repair or remove and replace components of membrane roofing system where test results or inspections indicate that they do not comply with specified requirements.

D. Additional testing and inspecting, at Contractor's expense, will be performed to determine compliance of replaced or additional work with specified requirements.

3.6 PROTECTING AND CLEANING

A. Protect membrane roofing system from damage and wear during remainder of construction period. When remaining construction will not affect or endanger roofing, inspect roofing for deterioration and damage, describing its nature and extent in a written report, with copies to Architect and Owner.

B. Correct deficiencies in or remove membrane roofing system that does not comply with requirements, repair substrates and repair or reinstall membrane roofing system to a condition free of damage and deterioration at time of Substantial Completion and according to warranty requirements.

C. Clean overspray and spillage from adjacent construction using cleaning agents and procedures recommended by manufacturer of affected construction.

3.7 ROOFING INSTALLER'S WARRANTY

A. WHEREAS <Insert name> of <Insert address>, herein called the "Roofing Installer," has performed roofing and associated work ("work") on the following project:

1. Owner: <Insert name of Owner.>
2. Address: <Insert address.>
3. Building Name/Type: <Insert information.>
4. Address: <Insert address.>
5. Area of Work: <Insert information.>
6. Acceptance Date: <Insert date.>
7. Warranty Period: <Insert time.>
8. Expiration Date: <Insert date.>

B. AND WHEREAS Roofing Installer has contracted (either directly with Owner or indirectly as a subcontractor) to warrant said work against leaks and faulty or defective materials and workmanship for designated Warranty Period,

C. NOW THEREFORE Roofing Installer hereby warrants, subject to terms and conditions herein set forth, that during Warranty Period he will, at his own cost and expense, make or cause to be made such repairs to or replacements of said work as are necessary to correct faulty and defective work and as are necessary to maintain said work in a watertight condition.

D. This Warranty is made subject to the following terms and conditions:

1. Specifically excluded from this Warranty are damages to work and other parts of the building, and to building contents, caused by:

a. lightning;
Insert required wind speed below.
b. peak gust wind speed exceeding <Insert wind speed> mph;
c. fire;
d. failure of roofing system substrate, including cracking, settlement, excessive deflection, deterioration, and decomposition;
e. faulty construction of parapet walls, copings, chimneys, skylights, vents, equipment supports, and other edge conditions and penetrations of the work;
f. vapor condensation on bottom of roofing; and

g. activity on roofing by others, including construction contractors, maintenance personnel, other persons, and animals, whether authorized or unauthorized by Owner.

2. When work has been damaged by any of foregoing causes, Warranty shall be null and void until such damage has been repaired by Roofing Installer and until cost and expense thereof have been paid by Owner or by another responsible party so designated.

3. Roofing Installer is responsible for damage to work covered by this Warranty but is not liable for consequential damages to building or building contents resulting from leaks or faults or defects of work.

4. During Warranty Period, if Owner allows alteration of work by anyone other than Roofing Installer, including cutting, patching, and maintenance in connection with penetrations, attachment of other work, and positioning of anything on roof, this Warranty shall become null and void on date of said alterations, but only to the extent said alterations affect work covered by this Warranty. If Owner engages Roofing Installer to perform said alterations, Warranty shall not become null and void unless Roofing Installer, before starting said work, shall have notified Owner in writing, showing reasonable cause for claim, that said alterations would likely damage or deteriorate work, thereby reasonably justifying a limitation or termination of this Warranty.

5. During Warranty Period, if original use of roof is changed and it becomes used for, but was not originally specified for, a promenade, work deck, spray-cooled surface, flooded basin, or other use or service more severe than originally specified, this Warranty shall become null and void on date of said change, but only to the extent said change affects work covered by this Warranty.

6. Owner shall promptly notify Roofing Installer of observed, known, or suspected leaks, defects, or deterioration and shall afford reasonable opportunity for Roofing Installer to inspect work and to examine evidence of such leaks, defects, or deterioration.

7. This Warranty is recognized to be the only warranty of Roofing Installer on said work and shall not operate to restrict or cut off Owner from other remedies and resources lawfully available to Owner in cases of roofing failure. Specifically, this Warranty shall not operate to relieve Roofing Installer of responsibility for performance of original work according to requirements of the Contract Documents, regardless of whether Contract was a contract directly with Owner or a subcontract with Owner's General Contractor.

END OF SECTION

SECTION 15000

SUPPLEMENTAL MECHANICAL GENERAL REQUIREMENTS

PART 1 - GENERAL

1.1 RELATED DOCUMENTS

A. The General Provisions, Special Provisions and Notice to Contractors shall apply to this work. Read these to be familiar with conditions related to the installation of the work.

1.2 WORK SHOWN ON DRAWINGS

A. The drawings accompanying this specification, as a part thereof, are working drawings indicating the location and arrangement of the increments of the systems of this section of work. Material deviation from this arrangement, process or means of application, shall bear the Engineer's review stamp before the change is made on the job or materials are ordered. Changes made without such review shall be ordered removed and items installed as specified shall be provided at no additional expense to the Owner.

B. The drawings are not intended to show in minute detail minor items of installation or materials such as specific fittings or findings.

1.3 MATERIALS AND LABOR

A. Furnish materials and labor necessary to deliver to the Owner a complete and operable system installed in accordance with the contract documents.

B. Materials shall be of the best quality. Workmanship shall be of highest grade and construction shall be done according to best practices of the trade.

C. Provide, when required, labeled samples of material or equipment specified herein or proposed to be used in this work.

D. Where words "furnish", "provide", or "install" are mentioned, either singly or in combination, these words are hereby interpreted to mean "furnish and install" or "provide and install", including materials complete with connections, supplemental devices, accessories and appurtenances, unless specifically otherwise noted. These words are likewise hereby interpreted as being prefixed to materials, equipment, and apparatus hereinafter mentioned, either in abbreviated or scheduled information or in the technical sections of the specifications.

1.4 EQUIPMENT INSTALLATION IN HEATING SEASON

A. The system shall be installed provided that the construction area will have sufficient heat to maintain temperature above 40°F throughout the construction period.

1.5 COOPERATION BETWEEN TRADES

A. Provide information sufficiently in advance of this work, so that work by the other trades may be coordinated and installed without delays. Furnish and locate sleeves, supports, anchors and necessary access panels.

B. Where work is concealed, assure it does not project beyond finished lines of floors, ceilings, or walls.

C. Equipment or piping requiring access found to be located above sheetrock ceilings shall be brought immediately to the attention of the Architect for resolution.

1.6 VISITING THE PREMISES

A. Not applicable.

1.7 ORDINANCES, AUTHORITIES, PERMITS, AND FEES

A. Obtain necessary permits and licenses, give notices and comply with laws, ordinances, rules, regulations or orders affecting the work, and pay fees and charges in connection therewith.

B. The "authority having jurisdiction" is the organization, office, or individual responsible for "approving" equipment, an installation, or a procedure.

1.8 PROTECTION OF WORK AND MATERIALS

A. Protect and care for materials delivered and work performed until the completion of the work. Defective equipment or equipment damaged in the course of storage, installation or test shall be replaced or repaired to the satisfaction of the Engineer at no additional cost to the Owner.

1.9 INSURANCE

A. Purchase and maintain Public Liability and Property Insurance during the progress of the work and until completion and acceptance of the entire project by the Owner in the amounts as specified in the General Conditions.

1.10 APPLICABLE CODES

A. Work and materials shall conform to the latest rules and regulations listed below and these rules and regulations hereby are made part of this specification. They include, but are not necessarily limited to the following:

American Society for Testing and Materials (ASTM)
Underwriters' Laboratories, Inc. (UL)
Air Moving and Conditioning Assoc. (AMCA)
American Society of Heating, Refrigerating, and Air Conditioning Engineers (ASHRAE)
American Society of Mechanical Engineers (ASME)
National Electrical Manufacturers Association (NEMA)
Institute of Electrical and Electronics Engineers (IEEE)

American National Standards Institute (ANSI)
National Fire Protection Association (NFPA)
American Water Works Association (AWWA)
Local Fire Code
Local Plumbing Codes
American Welding Society

1.11 SHOP DRAWINGS

A. Submit shop drawings, manufacturers' data and certificates for equipment, materials and finish, and pertinent details for each system where specified in each individual section, eight (8) copies, to be submitted to the Resident. Shop drawings will be returned "No Exceptions Taken", "Make Corrections Noted", "Amend and Resubmit", "Submit Specified Item", or "Rejected" less two (2) copies. Work shall progress in accordance with "Reviewed" shop drawings (ONLY).

B. Groups of similar shop drawings shall be submitted as individual bound documents with covers and indexes. Typical similar items would be "Diffusers and Registers", "Valves and Controls". Rejection of individual items shall not be cause for rejection of the entire document.

C. Clearly indicate item(s) to be reviewed on each submission by highlighting or underlining intended item(s). Submissions not clearly marked shall be returned "Amend and Resubmit".

D. Shop drawings must bear the Engineer's review stamp. In the event that the Engineer returns shop drawings "Amend and Resubmit" or "Rejected", the shop drawing must be revised and resubmitted for review.

E. Furnishing of the specified item must still produce the results and performance, dependability and quality reasonably to be expected within the spirit of the specifications, drawings, and the standard of good mechanical performance normal to the trade.

1.12 SUBSTITUTIONS

A. Where the specifications allow the substitution of a product, still this product is subject to review by the Engineer in accordance with the paragraph entitled "Shop Drawings". Review of a substitute item is an indication only that the substitute item is compatible with the specified item as a claim of the manufacturer. Insure dimensional propriety, performance, and quality of the substitute item.

B. Reference in the specifications or on the drawings to any product, material, fixture, form or type of construction, by proprietary name, manufacturer, make or catalog number, establishes a standard of quality or design and is not meant to limit competition. Use any equivalent substitute provided favorable written review by the Engineer is first obtained. The (ONLY) notation in the specification is an exception to this and leaves no option.

C. For materials or equipment which are supplied with integral or factory applied finish, the colors will be considered in evaluating substitutions.

D. For the purpose of avoiding conflicts with other trades, contracts, and adjoining work where more than one (1) article, device, material, fixture, form or proprietary name, manufacturer,

make or catalog number, the first named shall be used as the basis of design and details. The cost of any changes because of substituted item shall be borne by the Contractor requesting such change.

PART – 2

NOT USED

PART 3 - EXECUTION

3.1 GRADES AND ELEVATIONS

A. Establish and maintain grades and elevations in connection with this work.

3.2 EQUIPMENT SUPPORTS

A. Furnish and install equipment supports for mechanical equipment as required. Supports shall be subject to review by the Engineer.

3.3 SLEEVES AND PREPARED OPENINGS

A. Coordinate core-drilling, cutting, patching and setting of sleeves, frames, framing and lintels for openings with other trades. Sleeves shall be furnished by the Contractor. Pipe sleeves shall be provided at all floor and wall penetrations. Sleeves shall be Schedule 40 steel pipe for iron pipe, Type “L” copper for copper pipe and Schedule 40 PVC for plastic pipe. Sleeves shall be firestopped, as specified.

B. Failure to give timely notice of and to locate openings and furnish sleeves shall cause no additional expense to the Owner.

3.4 CONNECTION TO EQUIPMENT

A. Provide piping connections, supports, brackets, compensators or flexible connections to prevent application of excessive stresses to equipment.

B. Equipment shall be installed with flanges or unions in such a manner as to permit disconnecting for removal of tubes, coils, elements and other equipment for inspection, service and repairs.

3.5 ACCESS TO EQUIPMENT

A. The installation of work performed shall provide reasonable accessibility for operation, inspection, and maintenance of equipment and accessories. The Engineer shall determine the adequacy of such accessibility.

3.6 ACCESS PANELS

A. Access panels shall be provided where indicated on the drawings and as required for access to valves and other serviceable components. Access doors shall be Milcor, Zurn or approved equal hinged with primed finish and with allen wrench operated latch.

B. Access panels installed in fire-rated assemblies shall have the same fire rating as the assembly.

3.7 PAINTING OF EQUIPMENT

A. Exposed ironwork, including steel supports and hangers in unfinished spaces, mechanical rooms, pits, and trenches shall be properly cleaned, prepared and painted with two (2) coats of black asphaltum varnish.

3.8 GUARDS

A. Exposed moving and rotating elements of mechanical equipment items shall be protected with suitable guards for personnel protection. Guards shall be of rigid construction, firmly positioned. Holes shall be provided in guards at shaft centers to facilitate tachometer readings.

3.9 LUBRICATION

A. Furnish and install grease fittings for points requiring lubrication. Furnish extension type fittings as required to provide easy access for maintenance lubrication.

B. Furnish initial charges of lubricants for equipment. Lubricants shall be in conformance with the manufacturer's requirements and recommendations.

3.10 ELECTRIC MOTORS AND MOTOR CONTROLS

A. Unless otherwise noted, motors, motor starters and other electrical accessories, which are specified under Mechanical specifications shall be selected with characteristics as follows:

1/2 Horsepower and less - 120 volt, 1 phase, 60 Hz.
3/4 Horsepower and larger - 230 volt, 1 phase, 60 Hz.

B. Motors shall be built in accordance with the latest applicable NEMA, IEEE and ANSI Standards. Motors shall be manufactured by Baldor, Magnetek or Toshiba, of the latest type and quality specified under individual items of equipment. Motor efficiencies shall be premium high efficiency type per the Consortium for Energy Efficiency Standard and/or be “Energy Star” compliant.

C. Magnetic motor starters for mechanical items of equipment shall be furnished under Division 16 unless the starter is an integral part of a factory packaged item of equipment. Each starter furnished as an integral item of equipment shall be provided with overload heater elements. Starters shall have single phase protection or shall have relays installed to provide this feature. Starters shall be equipped with suitable step-down transformers to provide required control voltage.

D. Motors shall have a minimum continuous duty service factor of 1.15. Minimum motor efficiency shall be:

MOTOR HORSEPOWER	PERCENTAGE EFFICIENCY		
	(1200RPM)	(1800 RPM)	(3600 RPM)
1,1-1/2,2,3	----	86.5	85.5
5	89.5	89.5	86.5
7.5	90.2	91.0	88.5
10	91.7	91.7	89.5
15	91.7	93.0	90.2
20	92.4	93.0	91.0
25	93.0	93.6	91.7
30	93.6	94.1	91.7
40	94.1	94.1	92.4
50	94.1	94.5	93.0
60	94.5	95.0	93.6
75 & UP	94.5	95.0	93.6

3.11 CLEANING OF SYSTEMS

A. Piping and duct systems shall be thoroughly cleaned and flushed prior to initial operation.

B. Thoroughly clean exposed portions of the mechanical installation, removing labels and foreign substance.

C. Furnish detergents, solvents, cleaning compounds, and tools required for cleaning operations.

D. Keep the premises free from accumulation of waste material or rubbish and at the completion of the work, remove from the job site tools, scaffolding, surplus materials, and rubbish, leaving the work areas "broom" clean.

3.12 STARTING OF EQUIPMENT

A. Testing or starting of equipment shall be done in collaboration with trades concerned to insure safe and proper operation of the equipment.

B. Prior to starting equipment, provide lubrication at required points. Before starting any electrical or electric motor driven equipment, a check must be made to insure that proper heater coils are installed in the starters and that the equipment is rotating in the proper direction.

3.13 OPERATIONAL TESTING

A. Operate systems until successful operation is demonstrated to the Engineer. This initial operation shall be in addition to the testing of the system and shall be done after the system is cleaned and finished.

3.14 RECORD DRAWINGS

A. During construction, keep an accurate record of deviations to the installation of the work as indicated on the drawings. Upon completion of the work, furnish a copy of this record to the Engineer. **Submit record drawings before requesting final payment**.

3.15 MANUFACTURER'S REPRESENTATIVE

A. As indicated in the Technical Sections of this specification or as directed by the Engineer, provide the services of a factory trained Engineer or Technician to inspect, adjust, and place in proper operating condition the equipment or item involved. No additional compensation will be allowed for such service.

3.16 MANUFACTURER'S INSTRUCTIONS, OPERATION AND MAINTENANCE DATA

A. Provide for each item of equipment or apparatus furnished, a complete set of printed instructions obtained from the manufacturer covering proper operation, maintenance, lubrication, cleaning, servicing, adjustment, and safety instructions.

B. Manufacturer's data shall include performance data (curves are preferred where applicable) complete parts lists, recommended spare parts lists, piping, and wiring diagrams.

C. Arrange data in complete sets, properly indexed and marked.

D. Data shall include a complete set of shop drawings.

E. Material shall first be submitted in preliminary form for review by the Engineer. After review, submit three (3) copies in bound volumes to the Engineer for distribution.

3.17 GUARANTEES

A. An item becomes "defective" when it ceases to conform to the Contract Documents. Guarantees begin on the date of issuance of a certificate authorizing final payment or certificate of substantial completion with the Owner taking occupancy or beneficial use thereafter.

B. Upon completion of the work and before applying for final payment, furnish a written guarantee, stating that the work complies with the provisions of codes listed herein and the local enforcing authorities, and that it will be free from defects of material and workmanship for not less than one (1) year. Guarantee shall further state that the Contractor will, at his own expense, repair or replace any of his material and work which may become defective during the time of guarantee, together with other work damaged as a consequence of such defects.

C. Where special guarantees, covering installation, operation or performance of any systems, or equipment furnished under are indicated, the full responsibility for the fulfillment of such guarantees must be assumed by the Contractor who shall obtain written guarantees in triplicate, two (2) copies of which shall be filed with the Engineer before final acceptance.

D. Repeated malfunctioning or failure in service of any item or work of the system is sufficient cause for the Engineer to order the removal of the item, and its replacement with new item at the expense of the Contractor.

3.18 EXISTING UTILITIES AND EQUIPMENT

A. Care shall be taken to protect or replace damaged existing utilities. Information indicated in the contract documents is the best information available as to the location of underground and concealed utilities and equipment.

3.19 FIRESTOPPING

A. Firestopping shall be performed in accordance with Specification Section 07270 “Firestopping”. All penetrations of fire-rated assemblies including walls and floors by mechanical system components (piping, ductwork, conduits, etc.) shall be firestopped as specified. Coordinate size, location and type of pipe and duct sleeves as required by firestopping systems.

* END OF SECTION *

SECTION 15250

INSULATION

PART 1 - GENERAL

1.1 RELATED DOCUMENTS

A. The drawings and the specifications including the project manual are hereby made a part of the work of this section.

1.2 DESCRIPTION

A. The work covered by this Section of the specifications includes the furnishing of labor, materials, equipment, transportation, permits, inspections and incidentals and the performing of operations required to insulate the heating, ventilating, air conditioning, and plumbing systems.

1.3 SUBMITTALS

A. Substitutions: Your attention is directed to Section 15000-"Substitutions", relative to competition and the (ONLY) notation. Familiarity with this section shall be achieved before reading the PRODUCTS section of this specification.

B. The items for which the submittals paragraph in Section 15000, Supplemental General Mechanical Requirements, apply are as follows:

1. Piping insulation.
2. Equipment insulation.
3. Insulation application schedule.

1.4 DEFINITIONS

A. Finished Spaces: Spaces other than furred spaces, pipe and duct shafts, unheated spaces immediately below roof, spaces above ceilings, unexcavated spaces, crawl spaces, and tunnels, unless specifically listed below as an unfinished space.

B. Unfinished Spaces: Mechanical rooms.

C. Unconditioned Spaces: Spaces exposed to near outside ambient temperatures, such as unheated attic spaces or non-air conditioned areas.

D. Outside: Areas beyond the exterior side of walls or above the roof, unexcavated spaces, and crawl spaces.

E. Concealed: Not visible in finished or unfinished spaces. For example, above ceilings, below floors, between double walls, furred-in areas, pipe and duct shafts, and similar spaces.

F. Exposed: Visible from a finished or unfinished space.

1.5 MANUFACTURER'S STAMP OR LABEL

A. Packages or standard containers of insulation, jackets, cements, adhesives, and coatings delivered to the project site for use must have the manufacturer's stamp or label attached giving name of manufacturer, brand, and description of material. Insulation shall be asbestos-free.

1.6 FLAME SPREAD AND SMOKE DEVELOPED RATINGS

A. Materials shall have a flame-spread rating of not more than 25 and a smoke developed rating of not more than 50 when tested in accordance with NFPA 255, ASTM E84, or UL 723.

B. Provide materials with flame resistant treatments not subject to deterioration due to aging, moisture, high humidity, oxygen, ozone, or heat.

C. Materials Exempt From Fire-Resistant Rating: Nylon anchors for securing insulation to ducts or equipment.

PART 2 - PRODUCTS

2.1 PIPING INSULATION

A. Fiberglass: Heavy density preformed fiberglass with thermal conductivity of 0.29 Btu-in/hr-ft^2-^{o}F at 150°F mean temperature. Insulation shall conform to ASTM C547 Class I and shall be suitable for 450°F service. Fitting insulation shall be of same material used for pipe.

1. Insulation Jacket: All service (ASJ) type conforming to Fed. Spec. HH-B-100B Type I. Jacket permeability shall not exceed 0.02 perms (ASTM E96). Pipe fitting jacket shall be factory premolded, one-piece, PVC covers with pressure sensitive taped joints. Jackets in exposed locations shall have a white surface suitable for field painting. Provide vapor barrier as required by service.

2. Aluminum Jackets: ASTM B 209M (ASTM B 209), Temper H14, minimum thickness of 27 gage (0.016 inch), with factory-applied polyethylene and kraft paper moisture barrier on inside surface. Provide smooth surface jackets for jacket outside diameters less than 8 inches. Provide corrugated surface jackets for jacket outside diameters 8 inches and larger. Provide 1/2" wide stainless steel bands. Provide factory prefabricated aluminum covers for insulation on fittings, valves, and flanges.

C. Fittings, Flanges, and Valves: Provide insulation for fittings, flanges, and valves premolded, precut, or job fabricated of the same thickness and conductivity as used on adjacent piping.

2.3 EQUIPMENT INSULATION

A. Fiberglass (Hot Equipment): Semi-rigid fiberglass board conforming to Fed. Spec. HH-I-558B, Form B, Type I. Thermal conductivity shall be 0.32 Btu-in/hr-ft^2-^{o}F at 150°F mean temperature (ASTM C177), insulation shall be suitable for 650°F service. Insulation jacket shall be "all service" type conforming to Fed. Spec. HH-I-100B Type I or II. Jacket permeability shall not exceed 0.02 perms (ASTM E96).

B. Flexible Unicellular (Cold Equipment): Flexible unicellular with thermal conductivity of 0.27 Btu-in/hr-ft^2-^{o}F at 75°F mean temperature. Insulation shall conform to ASTM C534, Type II,

sheet and shall be suitable for 200°F service. Permeability shall not exceed 0.10 perms (ASTM E96). Insulation adhesive shall conform to Mil. Spec. MIL-A-24179A, Type II, Class 1.

PART 3 - EXECUTION

3.1 SURFACE CONDITIONS

A. Inspection:

1. Prior to work of this Section, carefully inspect the installed work of other trades and verify that such work is complete to the point where this installation may properly commence.

2. Verify that the insulation systems may be installed in accordance with pertinent codes and regulations and the reviewed Submittals.

3.2 GENERAL

A. Insulate after system tests have been completed and surfaces to be insulated have been cleaned of dirt, rust, and scale and are dry.

B. Install insulation with jackets drawn tight and cement down longitudinal and end laps. Do not use scrap pieces where a full length section will fit. Insulation shall be continuous through sleeves, wall and ceiling openings, except at fire dampers in duct systems and pipe penetrations through fire rated assemblies. Extend surface finishes to protect ends, and raw edges of insulation. Apply coatings and adhesives at the manufacturer's recommended coverage per gallon. Individually insulate piping and ductwork. Keep insulation dry during the application of the finish. Bevel and seal the edges of exposed insulation.

C. Unless otherwise indicated, do not insulate the following:

1. Factory preinsulated flexible ductwork.
2. Factory pre-insulated ductwork, plenums, casings, mixing boxes, and filter boxes.
3. Chrome plated pipes and fire protection pipes.
4. Vibration isolating connections
5. Adjacent insulation
6. ASME stamps, nameplates, access plates
7. Ductwork exposed to view in a normally occupied space.
8. Hydronic specialties: Low water cutoff, relief valves, relief valve discharge piping, pressure reducing valves, and expansion tanks.
9. Unions and flanges at equipment required for frequent service.

3.3 PIPING INSULATION

A. Pipe Insulation (Fiberglass): Place sections of insulation around the pipe and joints, tightly butt into place. Draw jacket laps tight and smooth. Secure jacket with fire resistant adhesive, or factory applied self sealing lap. Cover circumferential joints with butt strips, not less than 3-inches wide, of material identical to the jacket material. Overlap longitudinal laps of jacket material not less than 1-1/2 inches. Adhesive used to secure the butt strip shall be the same as used to secure the jacket laps.

B. Flanges, Unions, Valves and Fittings Insulation (Fiberglass): Factory fabricated removable and reusable insulation covers. Place factory premolded, precut or field-fabricated segmented insulation of the same thickness and conductivity as the adjoining pipe insulation around the flange, union, valve, and fitting abutting the adjoining pipe insulation. Install factory premolded one-piece PVC fitting covers over the insulation and secure by stapling or with metal or plastic tacks made for securing PVC fitting covers and secure with PVC vapor barrier tape.

C. Pipe Insulation (Flexible Unicellular): Bond cuts, butt joints, ends, and longitudinal joints with adhesive. Miter 90-degree turns and elbows, tees, and valve insulation. Insulate flanges, unions, valves, and fittings.

D. Where penetrating roofs and exterior walls, insulate piping to a point flush with the underside of the deck or wall and seal with a vapor barrier coating.

E. Hangers and Anchors: Pipe insulation shall be continuous through pipe hangers. Where pipe is supported by the insulation, provide MSS SP-58, Type 40 galvanized steel shields (16 gage maximum). For fiberglass insulation systems on pipe sizes 2 inches through 3", provide insulation inserts at points of hangers and supports. Insulation inserts shall be of molded glass fiber (minimum 12 pcf). Insulation inserts shall cover the bottom half of the pipe circumference, 180 degrees, and be not less than 4" long. Vapor-barrier facing of the insert shall be of the same material as the facing on the adjacent insulation. Seal inserts into the insulation. Insulation inserts for pipe sizes 4" and larger shall be welded pipe saddles. Install insulation in void area of saddle of same material used on adjacent insulation. For pipe sizes 2" and smaller, insulation inserts for flexible unicellular insulation systems shall be wooden doweling set on end of length equal to insulation thickness. Seal dowel to insulation with adhesive.

F. PVC or Metal Jackets: Provide over insulation. Machine cut jacket to smooth edge of circumferential joints. Overlap metal jacket not less than 2 inches at longitudinal and circumferential joints and secure with metal bands at not more than 9 inch centers. Overlap longitudinal joints down to shed water. Seal circumferential joints with a coating recommended by insulation manufacturer for weatherproofing. Solvent weld PVC jacket system to provide continuous watertight seal.

3.4 EQUIPMENT INSULATION

A. General Procedures: Apply equipment insulation suitable for temperature and service to fit as closely as possible to equipment. Join sections of insulation with adhesive. Bevel insulation around nameplates, ASME Stamp, and access plates. For insulation on equipment that must be opened periodically for inspection, cleaning, or repair, construct insulation to be removable and replaceable without damage. Provide vapor barrier seal at joints and seams for "cold" equipment.

B. Heating Equipment: Provide semi-rigid mineral fiberboard insulation. Seal longitudinal and lateral seams with FSK tape. Bond cuts, ends, and mitered sections with adhesive. Provide a vinyl-acrylic mastic coating on exposed fiberglass ends.

C. Cold Equipment: Provide flexible unicellular sheet insulation, bond cuts, butt joints, longitudinal joints and ends with vapor barrier adhesive. Vapor seal exposed edges to equipment.

3.5 INSULATION APPLICATION SCHEDULE

SERVICE	THICKNESS	MATERIAL/JACKET
PIPING:		
Domestic Cold Water Piping		
1" and smaller	1/2"	Fiberglass w/ASJ or Flexible Unicellular
1-1/4" and larger	1"	Fiberglass w/ASJ or Flexible Unicellular
Domestic Hot Water Piping and Domestic Hot Water Recirculation Piping		
2" and smaller	1"	Fiberglass w/ASJ or Flexible Unicellular
Rainwater piping	1”	Flexible Unicellular And PVC Jacket
Domestic Water Branch Piping Less than 10 ft in Stud Walls	1/2"	Fiberglass w/ASJ or Flexible Unicellular
IN TUNNEL		
Hot Water Heating Supply and Return Piping		
All sizes	1-1/2"	Fiberglass w/ASJ
IN TUNNEL STAIRWAYS		
IN TOLL BOOTHS		
Hot Water Heating Supply and Return Piping		
All sizes	1-1/2"	Fiberglass w/Aluminum Jacket
Hot Water Heating Supply and Return Branch Piping Less than 10 ft in Stud Walls	1"	Fiberglass w/ASJ
Hot Water Heating Supply and Return Branch Piping Less than 10 ft in Block Wall	1"	Flexible Unicellular
	Blanket, rewettable cloth	and mastic
EQUIPMENT:		

Backflow Preventer	1/2"	Flexible Unicellular
Heating System Air Separators	1-1/2"	Fiberglass, ASJ
Suction Diffusers, Air Separators, Flexible Connectors, Valves	1/2"	Flexible Unicellular

3.8 FIELD INSPECTION

A. Visually inspect to ensure that materials used conform to specifications. Inspect installations progressively for compliance with requirements.

* END OF SECTION *

SECTION 15400

PLUMBING

PART 1 - GENERAL

1.1 RELATED DOCUMENTS

A. The drawings and the specifications including Section 15000 “Supplemental General Mechanical Conditions” are hereby made a part of the work of this section.

1.2 DESCRIPTION

A. The work covered by this Section of the specifications includes the furnishing of labor, materials, equipment, transportation, permits, inspections, and incidentals and the performing of operations required to provide a complete and functional plumbing system.

B. Work shall be in accordance with the current edition of the Maine State Plumbing Rules and applicable local ordinances.

1.3 SUBMITTALS

A. Substitutions: Your attention is directed to Section 15000-"Substitutions", relative to competition and the (ONLY) notation. Familiarity with this section shall be achieved before reading the PRODUCTS section of this specification.

B. The items for which the submittals paragraph in Section 15000, Supplemental General Mechanical Requirements, apply are as follows:

1. Piping materials.
2. Valves.
3. Pipe hangers.
4. Drains.
5. Miscellaneous equipment.
6. Gas piping system.

PART 2 - PRODUCTS

2.1 PIPING MATERIALS

A. Rain water, Soil and Waste (Sanitary) above and below grade, Schedule 40 PVC.

B. Liquid-Tight Wall Penetrations: provide where indicated Thunderline/Linkseal assembly, modular type consisting of interlocking synthetic rubber links to form liquid-tight seal between pipe and wall sleeve, for standard installations (-40°F to 250°F) in accordance with ASTM D2000.

C. Gas Piping: Schedule 40 carbon steel pipe conforming to ASTM 120 or A53, with threaded joints and malleable iron fittings (Above grade). Type "K" copper without joints in 3" PVC conduit (below grade). Gas piping below slab shall be run in PVC conduit with sealed ends and vented to outside in accordance with NFPA 54.

D. Ball Valves for Gas Service: Apollo 80-100 Series, copper alloy with chromium plated floating ball per Federal Specification WW-V-35C, Type II, Composition: BZ, Style 3. Blowout-proof stem, reinforced Teflon seats, threaded ends, quarter turn on-off, 600 WOG rating, 250 psi rating for natural gas, UL-listed as an natural gas shutoff valve.

2.2 VALVES

Provide a PVC valve and check valve on sump pump discharge

2.3 PIPE HANGERS

A. Adjustable Swivel Hangers:

1. Pipe sizes 2" and less: Carpenter and Paterson Fig. 800, oversize for insulated piping systems.

2. Pipe sizes larger than 2": Carpenter and Paterson Fig. 100, oversize for insulated piping systems.

B. Riser Clamp: Carpenter and Paterson Fig. 126 CT copper plated for copper piping, Fig. 126 for iron and PVC piping.

2.4 PUMPS

Sump Pump (SP-1): Liberty Pumps model 237 sump pump, Poly/aluminum, 10 GPM at 30 ft head, 1/3 HP 115 V. Or reviewed equal.

2.5 MISCELLANEOUS EQUIPMENT

A. Floor Drain (FD-1): Zurn ZB-415-6C-Y-V, cast iron body with 3" outlet, combination invertible membrane clamp, adjustable collar, sediment bucket, backwater valve. Or reviewed equal.

B. Floor Cleanout (FCO-1): Zurn ZB-1400 adjustable floor cleanout, cast iron body, with gas and watertight ABS tapered thread plug. Provide size equal to piping served with maximum size of 4". Or reviewed equal.

C. Roof Drain (RD-1): Zurn ZRB121-C 12” diameter roof drain with low silhouette bronze dome with underdeck clamp. Or reviewed equal.

2.6 HEAT TRACING

A. Provide commercial grade exterior self-regulating heat trace, 5 W per foot, inside the roof drain piping from the roof drain to 4 feet below finished grade.

PART 3 - EXECUTION

3.1 SURFACE CONDITIONS

A. Inspection:

1. Prior to work of this Section, carefully inspect the installed work of other trades and verify that such work is complete to the point where this installation may properly commence.

2. Verify that plumbing may be installed in strict accordance with pertinent codes and regulations and the reviewed Shop Drawings.

3.2 INSTALLATION OF PIPING

A. Provide and erect in accordance with the best practice of the trade piping shown on the drawings and as required to complete the intended installation. Make offsets as shown or required to place piping in proper position to avoid other work and to allow the application of insulation and finish painting to the satisfaction of the Architect.

B. The size and general arrangements, as well as the methods of connecting piping, valves, and equipment, shall be as indicated, or so as to meet the requirements of the Architect.

C. Piping shall be erected so as to provide for the easy and noiseless passage of fluids under working conditions.

D. Install unions to facilitate removal of equipment.

E. Copper pipe shall be reamed to remove burrs.

F. Connections between copper and steel piping shall be made with brass fittings.

G. Solder joints shall be made with lead free solder. Clean surfaces to be soldered and use a paste flux. Wash joints with sodium bicarbonate and water to remove corrosive effects of heated solder paste. Caution: Lead-bearing solder is not permitted.

H. Pipe penetrations through walls, floors and ceilings shall be in accordance with Section 15000 "Supplemental General Mechanical Requirements". Traverse points of piping shall be escutcheoned with split chrome floor and ceiling plates and spring anchors, where visible to occupancy.

I. Provide a cleanout in the vertical position at the base of each drop.

J. Rain water, Sanitary and vent piping shall be sized and installed at 1/4" per foot slope or as indicated and in no case less than 1/8" per foot.

3.3 PIPE HANGERS

A. Impact driven studs are prohibited.

B. PVC Pipe: Supported at 4 foot intervals.

C. Verticals: Supported by use of clamp hangers at every story height, and at not more than 6 feet intervals for copper piping 1-1/4" and smaller size.

3.4 CLOSING IN UNINSPECTED WORK

A. General: Cover up or enclose work after it has been properly and completely reviewed

B. If any of the work is covered or enclosed prior to required inspections and review, uncover the work as required for the test and review. After review, tests and acceptance, repairs and replacements shall be made by the appropriate trades with such materials as necessary for the acceptance by the Architect and at no additional cost to the Owner.

3.5 CLEANUP AND CORROSION PREVENTION

A. Upon completion of the work thoroughly clean and flush piping systems to the sewer with water.

B. Fixtures, piping and equipment shall be thoroughly cleaned. Dirt, dust, and debris shall be removed and the premises left in a clean and neat condition.

3.6 TESTS

A. Sanitary soil, waste and vent piping: Fill with water to top of vents, and test as required by Code.

3.7 INSULATION

A. Insulation shall be performed in accordance with Specification Section 15250 “Insulation”.

* END OF SECTION *

SECTION 15700

HVAC SYSTEM

PART 1 - GENERAL

1.1 DESCRIPTION

A. The work covered by this Section of the specifications includes the furnishing of labor, materials, equipment, transportation, permits, inspections and incidentals and the performing of operations required to install the heating, ventilating and air conditioning systems indicated.

1.2 RELATED DOCUMENTS

A. The drawings and the specifications including SECTION 15000 "SUPPLEMENTAL MECHANICAL GENERAL REQUIREMENTS" are hereby made a part of the work of this section.

1.3 SUBMITTALS

A. Substitutions: Your attention is directed to Section 15000-"Substitutions", relative to competition and the (ONLY) notation. Familiarity with this section should be achieved before reading the PRODUCTS section of this specification.

B. The items for which the submittals paragraph in Section 15000, Supplemental Mechanical General Requirements, apply are as follows:

1. Piping materials.
2. Fittings for steel pipe.
3. Hangers.
4. Piping, valve and equipment identification.
5. Valves.
6. Hydronic specialties and expansion joints.
7. Glycol circulating pumps.
8. Heating/ventilating unit HV-1
9. Heat recovery coil HRC-1
10. Exhaust fan EF-1
11. Firestopping materials and methods.

PART 2 - PRODUCTS

2.1 PIPING MATERIALS

A. Hot Water Heating Piping: : Type L hard copper tubing and cast bronze or wrought copper solder fittings or Schedule 40 carbon steel pipe with threaded joints and malleable iron fittings.

B. Underground Hot Water Heating Piping / Hot Water Heating: Rhinoflex flexible pre-insulated piping by Rovanco Piping Systems Inc. Piping shall be crosslinked PEX pipe

suitable for temperatures up to 204°F. Insulation shall be polyurethane closed cell, minimum 1" thickness. The outer jacket shall be corrugated seamless polyethylene. Fittings shall be brass, copper or nickel-plated, insulated and jacketed. Install no joints below grade.

2.2 FITTINGS FOR STEEL PIPE

A. Fittings in sizes 1/2" through 2": Steel or malleable iron with requirements as follows:

1. Steel fittings socket welding or screwed type conforming to ANSI B16.11.

2. Malleable iron fittings screwed type conforming to ANSI B16.3.

B. Steel Flanges: Forged steel, welding type conforming to ANSI B16.5. Bolting and gaskets shall be as follows:

1. Bolting: Material used for bolts and studs shall conform to ASTM A 307, Grade B, and material for nuts shall conform to ASTM A 194, Grade 2. Dimensions of bolts, studs, and nuts shall conform to ANSI B18.2.1 and ANSI B18.2.2 with threads conforming to ANSI B1.1 coarse type, with Class 2A fit for bolts and studs, and Class 2B fit for nuts. Bolts or bolt-studs shall extend completely through the nuts.

2. Gaskets: Gasket material for flanged joints for steam application under saturated conditions shall be composition or copper. Gaskets shall be of a material that resists attack by the fluid or gas in the pipeline and shall be suitable for the pressure and temperature ranges encountered. Gaskets shall be as thin as the finish of surfaces will permit. Raised-face steel flanges shall have ring gaskets with an outside diameter extending to the inside of the bolt holes. Gaskets shall have an inside diameter equal to or larger than the port openings.

C. Butt Weld Joints: Shall conform to ANSI B31.1. The use of backing rings shall conform to ANSI B31.1. Ferrous rings shall be of weldable quality and shall not exceed 0.05 percent sulfur. Backing rings shall be of the continuous machined or split band type.

D. Grooved Joint Couplings: Couplings shall be self centering and shall engage and lock in place the grooved or shouldered ends of pipe and pipe fittings in a positive watertight couple. The couplings shall provide some degree of angular pipe deflection, contractions, and expansion. The coupling clamp shall be malleable iron conforming to ASTM A 536, Grade 65-45-12. The gasket shall be molded rubber conforming to ASTM D 2000, the "line call-out" number shall be suitable for a water temperature of 230 degrees F. Coupling nuts and bolts shall be steel conforming to ASTM A 183. Grooved fittings shall be malleable iron conforming to ASTM A47, Grade 32510 or ductile iron conforming to ASTM A 536, Grade 65-45-12. Mechanical couplings and fittings shall be of the same manufacturer. Before couplings are assembled, pipe ends and outside of gaskets shall be lightly coated with lubricant approved by the coupling manufacturer to facilitate installation.

2.3 HANGERS

A. Adjustable Swivel Hanger: Pipe Sizes 2" and Less: Carpenter and Paterson Fig. 800 conforming to MSS-SP-58, oversize for insulated piping systems. Pipe Sizes Larger Than 2": Carpenter and Paterson Fig. 100, oversize for insulated piping systems.

B. Riser Clamp: Carpenter and Paterson Fig. 126 and Fig. 126 CT conforming to MSS-SP-58, provide copper plated clamps on copper pipes.

2.4 VALVES

A. Ball Valves: Apollo 70-100 Series, bronze body, Fed. Spec. WW-V-35, Type II, Class A (bronze), Style 3, blow-out proof stem, 600 pound W.O.G., screwed connection for steel pipe, sweat connection for copper tube. Provide stem extension to allow operation without interfering with pipe insulation. Provide Tee handles for valves thru 2" pipe size.

B. Gate Valves: Nibco Model S-113 or T-113, bronze body Fed. Spec. WW-V-54, wedge disc, rising stem, screwed connection for steel pipe, sweat connection for copper tube, 150-pound class.

C. Outside Screw and Yoke (OS&Y) Gate Valves: Nibco Model F-617-0, iron body, Fed. Spec. WW-V-58 with bronze trim, 125 pound class.

D. Check Valves: Nibco Model S-413 or T-413, bronze body Fed. Spec. WW-V-51, regrinding swing check type, 200 pound class.

2.5 PIPING, VALVE AND EQUIPMENT IDENTIFICATION

A. Pipe Identification: Provide plastic "wrap around" identification markers by Seton or Setmark indicating flow direction and fluid flowing for the following:

Hot Water Supply Piping
Hot Water Return Piping

1. Markers shall be placed 30-50 ft. apart for piping in accessible areas (minimum of one marker for each pipe type in each room).

2. Markers shall be placed outside the pipe insulation and in the most obvious location for viewing. Markers shall not be installed in exposed areas except in the mechanical rooms.

3. Piping identification shall be color-coded and in accordance with ANSI.

B. Equipment Identification:

1. Provide laminated plastic nameplates for boilers, pumps, and air handling units. Laminated plastic shall be 0.125-inch thick melamine plastic conforming to Fed. Spec. L-P-387, black with white center core. Surface shall be a matte finish, corners shall be square. Accurately align lettering and engrave into the white core. Minimum size of nameplates shall be 1.0 inch by 2.5 inches. Lettering shall be minimum of 0.25-inch high normal block lettering.

C. Valve Tags:

1. Attach to each valve a 1-1/2" round or octagonal brass tag with 1/2" indented numerals filled with a durable black compound. In addition to the valve numbers, each tag shall identify the system it controls. Service stop valves exposed in finished areas need not be tagged.

2. Tags shall be securely attached to stems of valves with copper or brass "S" hooks, or chains.

3. Valve charts shall be provided for each piping system and shall consist of schematic drawings of piping layouts, showing and identifying each valve and describing its function. Upon completion of the work, one (1) copy of each chart, sealed to rigid backboard with clear lacquer placed under glass and framed, shall be hung where directed. Two (2) additional unmounted copies shall be delivered to the Architect.

4. Tags and charts shall be coordinated with Section 15400 Plumbing and when completed this work shall have been done sequentially.

2.6 HYDRONIC SPECIALTIES

A. Thermometers: Trerice Model SX9-series solar operated. The digital display shall include 1/2" high LCD digits. The thermometer display shall be switchable between ^{0}F. and ^{0}C. and require a 10 Lux or less of light for operation. Accuracy shall be +/- 1% of the displayed value or 1^0, whichever is greater. Provide with heat transfer fluid to fill the sealed interstitial space between bulb and well. Evidence of the transfer fluid leaking shall be cause for refilling and sealing the well.

B. Pressure Gauges: Trerice Series 800 or Ashcroft Type 1005, Grade B, ANSI B40.1, 3-1/2" diameter face installed with shut off petcock and restrictor. Pressure range: 0-60 psig with 5 psi graduations, 0-100 psig with 10 psi graduations for chilled water pumps.

C. Expansion Tanks (Captive Air Type) (ET): Watts Model as scheduled, tank shall be of capacity indicated and shall be welded steel, constructed and tested hydrostatically in accordance with Section VIII of the ASME Boiler Pressure Vessel Code. The tank bladder shall be butyl rubber and shall be removable for inspection. Tank shall have air charging and system connections, and shall be factory pressurized to 18 psig.

D. Strainers: Watts Model 77S, MIL-S-16293, 125 psig minimum rating wye strainers, cast iron or bronze body, screen shall be stainless steel, monel or bronze with 20 mesh perforations. Provide with blowdown ball valve and 3/4" hose connection.

E. Automatic Air Vents (AAV-1): Armstrong No. 1-AV, float type to vent air in hydronic systems. Vent constructed with cast iron body and stainless steel internals and with NPT male inlet and outlet for 1/4 inch overflow for safe water connection. 150 psi working pressure, 250°F maximum temperature.

F. Tangential Air Separator (AS-*): Furnish and install as shown on the drawings a Spirotherm air elimination fitting on the hot water system. All fittings shall be fabricated steel with flanged connections, rated for 150psig design pressure and selected for less than 1 foot of

water pressure drop and velocity not to exceed 4 feet per second through the unit at specified GPM. All units shall include an integral copper bundle of Spirotubes to act as the turbulence suppressive coalescing medium which must completely fill the fitting's internal area. Units are to remove free and entrained air during system start up and continue to eliminate dissolved air through continual circulation and the coalescing action of the Spirotubes. Each fitting is to have a separate air and venting chamber to prevent system contaminants from harming the float and venting valve operation. At the top of the venting chamber shall be an integral float actuated brass air vent. There shall be no restriction in the connection from the venting chamber to the vent. The fittings are to include a valved side tap to flush floating dirt or liquids and for quick bleeding of large amounts of air during system fill or refill. Units shall include a bottom connection for use as a blow down connection for periodic cleaning. Unit shall be a Spirovent model of the size required to meet pressure drop and velocity criteria.

G. Manual Air Vents: Brass body, fiber discs, 125 psi working pressure, 240°F maximum temperature, adjustable for quick venting at system start-up.

H. Automatic Air Vents (AAV-2): Taco 'Hy-Vent', brass body, nickel plated vent, float style vent, 250psi working pressure.

I. Circuit Balance Valves: Taco "Accu-Flo" circuit setter.

1. Bronze or brass body and internals, teflon seats, 175 psi working pressure, 250°F working temperature. Balancing devices shall be adjustable and shall have provisions for connecting a portable differential pressure gauge for flow measurement. Each balancing device shall be sized to provide a differential pressure reading between 2 and 5 feet with the valve full open at design flow rates.

2. Install per manufacturer's recommendations for adjacent length of straight pipe.

3. Shop drawings shall indicate gpm, size, wide open differential pressure meter reading, and actual water pressure drop. Circuit balance valves shall be suitable for tight shut-off with memory stop feature.

J. Temperature and Pressure Test Ports: Peterson Equipment Co. Model 110 "Pete's Plugs" temperature and pressure test capability, brass body, 1/4" NPT fitting, Nordel valve cores, 275°F maximum temperature, 500 psig maximum pressure. Provide with (1) pressure and temperature test kit.

K. Automatic Flow Control Valves: Flow Design, Inc., Autoflow Model AC (up to 2") and Model WS (larger than 2"), Griswold, or approved equal. The valves shall be factory set to maintain the specified flow rates within +/- 5% over an operating range of 2-32 psid. Each valve shall have a five (5) year warranty and free first year cartridge exchange. The internal wear surfaces of the valve cartridge shall be electroless nickel or stainless steel. The valve body shall be forged brass and permanently marked with the flow rate and spring range. Minimum pressure and temperature ratings shall be 400 psig at 250EF. Valve accessories shall include a union and pressure and temperature test ports. Installation shall be in accordance with the manufacturer's recommendations. The ball valve shall have a teflon packing, brass packing nut and blowout-proof stem, large diameter plated ball and a full size steel handle with vinyl

grip. Provide an automatic flow control valve for each terminal heating unit as indicated on the drawings.

L. Propylene Glycol: Shall be "Dowfrost", non-toxic propylene glycol with long-life corrosion inhibitors suitable for use in closed hydronic heating systems. The hydronic heating system shall be filled with a 40% concentration of propylene glycol by volume.

2.7 GLYCOL PUMP GP-1

A. Furnish and install hot water circulating pumps of the type, size and capacity shown on drawings. Pumps shall employ ECM technology, Grundfros VersaFlo or approved equal.

B. Pumps shall be a maintenance free, self venting, system lubricated type specifically designed for quiet operation with a horizontal motor mounted directly to the pump volute.

C. Pump volute shall be constructed of cast iron, rated at 145 PSI working pressure. Temperature range for shall be from 14° to 230°F, based on maximum ambient temperatures of 104°F.

D. Impeller shall be constructed of engineered composite polypropylene. Shaft shall be made of hardened stainless steel and sleeve bearings made of metal impregnated carbon. Rotor can and rotor cladding shall be constructed of high quality stainless steel. Water lubricated sleeve bearings to be constricted of metal impregnated carbon. Pump shall not incorporate the use of couplings or mechanical seals of any kind.

E. The integral motor shall be non-overloading at any point of the curve, include thermal overload protection and rated for continuous duty operating on 120 volt, 1 phase or 208 volt, 3 phase; 60 hertz alternating current.

2.7 EXHAUST FAN EF-1

A. Hooded Roof-direct Drive Exhaust Fan. Fan manufacturers shall be Greenheck, Cook or equal. The fans shall include housing, fan wheel, shaft, bearings, inlet shroud, motor, mounting support and mounting frame as a factory-assembled unit. An OSHA-approved belt guard for each fan shall be included. The fan drive shall have a 1.5 service factor for the maximum rated horsepower. Provide a disconnect switch for each fan. Roof fans shall have a factory-applied epoxy coating with color selection by the Architect. Provide gravity-operated backdraft dampers for all exhaust fans.

B. Bearings shall be precision, flange-mounted self-aligning ball bearings at inlet and discharge. Minimum average L50 design life shall be 200,000 hours at maximum catalogued operating conditions. Grease lines shall extend to the exterior of the fan housing.

C. Submit sound power data for inlet and discharge sound.

D. Submit fan curves for each fan with the design operating point clearly marked.

E. Include roof curb by equipment manufacturer, Permatector coating and power disconnect,

2.8 HEATING & VENTILATION UNIT – HV-1

A. General

The product line consists of a horizontal air handling unit and optional mixing box Air-handling airflow data is certified in accordance with AHRI standard 430 The unit is UL listed to U S and Canadian safety standards and complies with NFPA 90A Air handlers consist of a hydronic and/or OX coil, drain pan, and centrifugal fan with motor in a common cabinet. Motor location and coil connections are independent for the same or opposite side location Air handlers are provided with knockouts in all four corners for installing the unit suspended from the ceiling with threaded rods Unit and accessories are insulated with 1" 1.51blcu It density fiberglass insulation 1" foil faced insulation is also available Large motor access panels are provided on both sides of the unit and accessories

B. Casing

Casings (structural components) are constructed of 18-gauge galvanized steel, insulated with 1" 1.5 Iblcu ft density fiberglass fire resistant and odorless glass fiber material to provide thermal and acoustical insulation Fan housing sides are directly attached to the air handler top and bottom panels strengthening the entire unit assembly Coil access panels are located on both sides of the air handler and allow easy removal of the internal coils and drain pan Main access panels provide generous access to the fan and rotor from both sides of the air handler

C. Foil Faced Insulation

The interior surface of the unit is acoustically and thermally lined with 1" 2.0 Iblcu ftR-Value of 4.3 density glass fiberwith a foil facing. The insulation is UL listed and meets NFPA-90A, UL 181 and bacteriological C665 standards

D. Coil #1 and Coil #2 (1st and 2nd stage) Hydronic Coils

Coils are two, four, or six-row, hydronic coils All water coils are 12 fins per inch All changeover coils come with a factory-provided thermistor mounted on the coil and w ired to the control box. All water coils use highly efficient Trane Delta Flo, Type H aluminum fins, mechanically bonded to seamless copper tubes All coils are specifically designed and circuited for water use. All coils are factory tested with 450.00 psi air underwater. Maximum standard operating conditions are 300.00 psi at 200.0 F. Sweat type connections are standard. Coil performance data is rated and certified in accordance with the current edition of AHRI standard 410 Propylene glycol is not covered under the scope of AHRI410 .

E. Unit Fan

The fans are DWDI (double width double inlet) forwardd curved centrifugal blower type.

The fans are direct drive mounted directly to the motor shaft All fans are dynamically balanced All air handlers have a single fan

F. Electronically Commutated Motors (ECM)

All motors are brushless OC (BLOC) electronically commutated motors (ECM) factory programmed and run tested in assembled units The motor controller is mounted in a control box with a built in integrated user interface and LED tachometer. If adjustments are needed, motor parameters can be adjusted through momentary contact switches accessible without factory service personnel on the motor control board Motors will soft ramp between speeds to lessen the acoustics due to sudden speed changes Motors can be operated at three speeds or at variable speed with factory supplied or field supplied controllers The motorr will choose the highest speed if there are simultaneous or conflicting speed requests All motors have integral overload protection with a maximum ambient operating temperature of 104.0 F and use permanently sealed ball bearings Motors can operate at plus or minus 10 percent of rated voltage on all speed settings

G. 2" Pleated Throw-Away Merv 8 Filter

The units are equipped with 2" flat pleated media filters with a rated average dust spot efficiency of no less than 35 to 40 percent when tested in accordance with ASHRAE52 atmospheric dust spot method and a Merv8 rating based on ASHRAE Standard 52.2

H. Tracer ZN Controls

The Tracer ZN Controller is a factory-installed, tested and configured controller which controls in a stand-alone application The ZN Controller offers the combined advantages of a factory mounted, wired and programmed controller for dependable out-of-the box operation. Standard control features include options normally available on more elaborate control systems All control options are available factory configured with additional configuration in the field using a service tool. The Blower Coil incorporates a factory mounted low temperature device so the ZN Controller can begin an algorithm when temperatures fall below acceptable levels The controller is located in a control box containing line voltage to 24vac transformer, ECM engine board, adapter board and disconnect sw itch (optional) All field connections other than power are made with screw type connections on the control board with the exception of field supplied valves which are connected to a factory supplied harness.

I Fan Status

Blower Coil Units with integrated ECM controls incorporate an advanced fan status monitoring system. The ECM controller continuously measures the performance of the motor. If the motor has not responded, or is deviating more than 20% from the requested performance, the ECM controller communicates to the unit controller that the fan is inoperative If the unit controller has communication capability, the BAS ill be alerted to the fail condition If the fan motor resumes operation or is able to operate within tolerance, the ECM controller communicate to the unit controller the change in status

Electric heating w ill be disabled, and other unit functions may be disabled as appropriate The monitoring is active in all modes of unit operation, for fixed or variable speed, and for user or system requested speeds

J. Deluxe Piping Package -Coil #2

The deluxe piping package consists of one shutoff ball varve, one strainer, one circuit setter balancing varve, and for three-way packages, a balancing fitting on the bypass line. The stop valves are ball type, and insulation on the piping package is by others

K. 2-Way, Modulating Control Valve -Coil #2

-Varve Type 3-w ay VU Series or VC Series (Honeywell)
-Cv Ranges 3.5
-Material Body -Forged Brass

2.9 TOOL BOOTHS CABINET UNIT HEATER CUH-1

A. Cabinet unit heaters and fan coil units shall be provided and installed where shown and fastened securely. The units shall be mounted as indicated on the drawings and shall include multi-blade centrifugal fans with quiet operating three (3) speed high efficiency direct drive motor, insulated casing, coils of copper tubes with aluminum fins, tamper proof access door to motor control switch.

B. All units shall be provided with a unit mounted disconnect switch with thermal overload protection, all factory installed and wired.

C. Cabinets shall be 18-gauge steel with exposed corners and edges rounded, easily removed access panels. Finish shall be factory applied baked enamel in color as selected by Architect on visible surfaces of enclosure or cabinet. Provide two (2) color chip cards with submittals (photocopies not acceptable).

D. Cabinet insulation shall be 2 inch thick dual density bonded glass fiber. Exposed side shall be high density erosion proof material suitable for use in airstreams up to 4500 FPM.

E. Coils shall be evenly spaced aluminum fins mechanically bonded to copper tubes, designed for 200 psi and 220 degrees F.

F. Provide two (2) sets of 1 inch *pleated media* throwaway type filters for each unit. "FILTERS". One set to be provided WITH each unit from the manufacturer to be used during construction and the other set installed when project is completed.

G. The following units are based on Trane Models in order to establish a standard.

Approved equals by Sterling and Mcquay will be considered.

1. CUH-1 Floor-mounted inverted flow with front supply louvers, return louvers and access panels. Include a 3-way valve and valve package including strainer and circuit setter.

2.10 TOLL BOOTHS ROOF-MOUNTED AIR CONDITIONING UNIT RHP-1

A. To be a Dometic model B59516 or approved equal.

B. Unit to include an air distribution box, and single zone LCD Thermosat.

PART 3 - EXECUTION

3.1 SURFACE CONDITIONS

A. Inspection:

1. Prior to work of this Section, carefully inspect the installed work of other trades and verify that such work is complete to the point where this installation may properly commence.

2. Verify that the heating system may be installed in accordance with pertinent codes and regulations and the reviewed Submittals.

3.2 INSTALLATION OF PIPING

A. In general, piping shall be run concealed above ceilings in occupied areas. Piping in other areas may be run exposed. Piping shall not be exposed in occupied spaces unless written authorization is given by the Architect.

B. Provide and erect in accordance with the best practice of the trade piping shown on the Drawings and as required to complete the intended installation. Make offsets as shown or required to place piping in proper position to avoid other work and to allow the application of insulation and finish painting to the satisfaction of the Architect.

C. The size and general arrangements, as well as the methods of connecting piping, valves, and equipment, shall be as indicated, or so as to meet the requirements of the Architect.

D. Piping shall be erected so as to provide for the easy and noiseless passage of heating fluid under working conditions. Inverted eccentric reducing fittings shall be used whenever water pipes reduce in size.

E. Water mains shall be run level or pitch slightly upward so that no air pockets are formed in the piping. The mains shall be set at elevations such that the runouts feeding equipment

shall have no pockets where air can collect except where vents are provided. Provide drains at low points in the piping systems.

F. High points in water piping shall be provided with automatic air vents.

G. In the erection of water piping, make proper allowances for expansion and contraction. Piping shall be anchored as necessary to control expansion. Hot water runouts to units shall be the size as indicated on the Drawings and shall come off the main downward or off the side with a minimum of two 90° elbows provided on runout from main.

H. Install stop valves and unions to facilitate isolation and removal of equipment. Provide final connections for hydronic specialties furnished under other sections of the Specifications.

I. Steel piping shall have screwed or welded connections. Threads on piping shall be full length and clean-cut with inside edges reamed smooth to the full inside bore. Close nipples shall not be used. Pipe threads: standard pipe threads, machine cut and full length. Pipe: reamed to remove burrs and up-ended and rapped to dislodge dirt and scale. Joint compound shall be applied to male thread only. If it is necessary to back off a screwed joint after it is made, the thread shall be cleaned and new compound applied. Caulked threads will not be permitted.

1. Welded Joints:

a. Welding Procedure Specifications: Before any welding is performed, submit copies of welding procedure specification for metals included in the work together with proof of qualification as outlined in ANSI B31.1.

b. Performance Qualification Record: Before any welder or operator shall perform any welding, submit 2 copies of the Welder's Performance Qualification Record in conformance with ANSI B31.1 showing that the welder was tested under the approved procedure specification submitted. In addition also submit each welder's assigned number, letter, or symbol which shall be used to identify the work of the welder, affixed to the joint immediately upon completion of the weld. Welders making defective welds after passing a qualification test shall be given a requalification test and upon failing to pass the test shall not be permitted to work this contract.

c. Previous Qualification: Welding procedures, welders and welding operators previously qualified by test may be accepted for this contract without requalification subject to approval and provided that the conditions specified in ANSI B31.1 are met before a procedure can be used.

d. Surface Conditions: Welding shall not be done when the atmospheric temperature is less than 0 degrees F, when the surfaces are wet, when rain or snow is falling or moisture is condensing on the surfaces to be welded, nor during periods of high wind, unless the welder and the work are protected properly. At temperatures between 32 degrees and 0 degrees F, the surfaces for

an area within 3 inches of the joint to be welded shall be heated with a torch to a temperature warm to the hand before welding. Surfaces to be welded shall be free from loose scale, slag, rust, paint, oil and foreign material. Joint surfaces shall be smooth, uniform, and free from fins, tears and other defects which might affect proper welding. Slag shall be removed from flame cut edges to be welded by grinding, temper colors need not be removed. Each layer of weld metal shall be cleaned thoroughly by wire brushing prior to inspection and deposition of additional weld metal.

e. Base Metal Preparation: Preparation of pipe ends shall be done by machining and/or grinding, except that oxygen or arc cutting will be permitted on carbon steel pipe only if the cut is reasonably smooth, true and heavy oxide is thoroughly cleaned from the flame cut surfaces by grinding.

The ends of pipe-to-pipe, and pipe-to-fitting, joints shall be aligned accurately within a tolerance of twenty percent of the pipe thickness. Alignment shall be maintained during welding by suitable clamps, jigs, tack welds, or other devices. If tack welds are used to maintain alignment, they shall be kept below the outside surfaces of the pipe and shall not exceed twice the pipe thickness in length or two thirds the pipe thickness in depth, shall be the same quality as the final welds, and shall be fused thoroughly in the final weld. Defective tack welds shall be removed before the final weld is made.

f. Quality of Welds: The quality of welds shall be in accordance with ANSI B31.1. The surface of the finished welds shall have a bright metallic luster after cleaning, shall be fairly smooth with regular, even ripples, and shall be uniform in contour. Except as necessary to correct defects, the surfaces shall not be dressed, smoothed, or finished for improving their appearance. Welds shall be sound throughout and fused thoroughly, and shall be free from gas pockets, oxides, slag inclusions, and surface porosity, except that very small pores or specs of oxides or slag will be allowed if dispersed widely and if not larger or more numerous than those produced in passing qualification tests. Welds shall be free from overlaps, undercuts and excessive convexity. The inside of the pipe shall be free from blobules of weld metal which would restrict the pipe area or might become loose.

g. Correction of Defects: Defective or unsound welds shall be corrected by removing and replacing the welds with new welds, or as follows:

1) Excessive convexity - chip or grind weld to required size.

2) Undercutting, shrinkage cracks, craters, blowholes, and excessive porosity - chip or grind weld to sound weld and base metal and deposit additional weld metal.

3) Undersize and excessive concavity - clean weld and deposit additional weld metal.

4) Overlapping and lack of fusion - remove weld by chipping or grinding and reweld.

5) Slag inclusions - chip or grind weld to remove slag and fill with weld metal.

6) Removal of adjacent base metal during welding - chip or grind weld to sound base and weld metal and form full size by depositing additional weld metal. Pipe or fittings which cannot be rewelded satisfactorily shall be replaced with new pipe or fittings at the Contractor's expense. Caulking of welds shall not be done. Before adding weld metal or rewelding, the surfaces shall be cleaned thoroughly. The removal of weld metal form a defective weld shall not extend into the base metal beyond the weld penetration. Where incomplete fusion is disclosed by chipping or grinding to correct defects, the part of the weld shall be removed and rewelded. In chipping or grinding welds, the weld or base metal shall not be nicked or undercut.

K. Connections between copper and steel piping shall be made with brass fittings.

L. Install thermometer wells for temperature gauges and sensors, projecting a minimum of 2" into the pipe with extension to face of insulation. Piping 1-1/2" and smaller shall be enlarged to 2" where wells are installed. Wells shall be installed in active sections of piping. Fill wells with heat transfer fluid.

M. Solder joints shall be made with non-lead solder. Clean surfaces to be soldered and use a paste flux. Wash joints with sodium bicarbonate and water to remove corrosive effects of heated solder paste. Hot wipe solder at each fitting.

N. PVC piping shall have solvent welded joints except at connections to equipment and valves which shall be screwed for sizes 2" and smaller and flanged for sizes 2-1/2" and larger. Solvent welded joints: Pipe ends deburred, and beveled. Pipe end and fitting: Cleaned and dried, primed to soften bonding surfaces. Pipe end: Apply even full layer of solvent cement after priming. Before cement starts to set, insert pipe end into fitting and turn 1/4 turn to evenly distribute cement. Hold joint together until cement sets-up, wipe excess cement off joint.

O. Pipe penetrations through walls, floors and ceilings shall have pipe sleeves of the same material as the pipe and in accordance with Section 15000 "Supplemental Mechanical General Requirements" and BOCA. Pipe sleeves shall be suitable for firestopping in accordance with the firestopping manufacturers recommendations. Traverse points of piping shall be escutcheoned with split chrome floor and ceiling plates and spring anchors, where visible to occupancy.

P. Automatic Air Vents (AAV-1): Shall be installed with a manual isolation valve. The vent discharge shall be piped to a local floor drain.

Q. Automatic Air Vents (AAV-2): Shall be installed with a manual isolation valve.

3.3 PIPE HANGERS

A. Impact driven studs are not acceptable.

B. Pipes (copper or steel) shall be supported at intervals and rod sizes as follows, double nuts on hangers and on beam clips.

Pipe Size	Hanger Intervals	Rod Sizes
1/2"	5'	3/8"
3/4"	6'	3/8"
1"	7'	3/8"
1-1/4"	8'	3/8"
1-1/2"	9'	3/8"
2"	10'	3/8"
2-1/2"	11'	1/2"
3"	12'	1/2"

C. Verticals: Supported at the base and at intervals as follows by use of clamp hangers:

Steel Pipe: Not more than 16 ft.

Copper Pipe and Tubing:

1-1/2" and larger - Not more than 12 ft.
1-1/4" and smaller - Not more than 6 ft.

D. Provide welded steel saddles at each hanger on steel piping systems 4" and larger.

E. PVC Piping: Supported at 4' intervals.

3.4 INSTALLATION OF BOILERS

A. Install boilers per NFPA-54 and manufacturer's instructions. Provide boilers with interconnecting power and control wiring.

3.5 CLOSING IN WORK

A. Cover up or enclose work after it has been properly and completely tested and reviewed.

B. No additional cost to the Owner will be allowed for uncovering or recovering any work that is covered or enclosed prior to required test and review.

3.6 TEST AND ADJUST

A. Piping Systems: Test with water to a pressure of 75 psi and hold for a period of two hours. Repair any leaks and retest the piping system; repeat process until systems are leak-free. Test piping before it is insulated.

B. Before operating any system, flush the piping to remove oil and foreign materials.

C. After the installation is complete and ready for operation, test the system under normal operating conditions in the presence of the Architect and demonstrate that the system functions as designed.

D. Demonstrate that the HVAC systems have free and noiseless circulation of water, that all air has been purged, and that systems are watertight.

E. Correct defects, which develop in operational testing, conduct additional testing until defect free operation is achieved.

3.7 CLEANUP AND CORROSION PREVENTION

A. Piping and equipment shall be thoroughly cleaned. Dirt, dust, and debris shall be removed and the premises left in a clean and neat condition.

B. Before covering is applied to piping systems, clips, rods, clevises and other hanger attachments, and before uncovered piping is permitted to be concealed, corrosion and rust shall be wire brushed and cleaned and in the case of iron products, a coat of approved protective paint applied to these surfaces. When corrosion is from the effects of hot solder paste, the areas shall be cleaned and polished and a wash of bicarbonate of soda and water used to neutralize the acid condition.

3.8 INSTRUCTIONS

A. On completion of the project, instruct the Owner's representative in the care and operation of the system. The total period of instruction shall not exceed four (4) hours per building. The time of instruction shall be arranged with the Owner. In addition to the prime Mechanical Contractor, the control system Contractor, Balancing Contractor, and Owner's representative shall be present and participate in the Owner's instruction.

3.9 FIRESTOPPING

A. All penetrations of fire-rated assemblies including walls and floors by mechanical system components (piping, ductwork, conduits, etc.) shall be firestopped as specified.

* END OF SECTION *

SECTION 15800

DUCTWORK AND ACCESSORIES

PART 1 - GENERAL

1.1 RELATED DOCUMENTS

A. The drawings and the specifications including SECTION 15000 "SUPPLEMENTAL MECHANICAL GENERAL REQUIREMENTS" are hereby made a part of the work of this section.

1.2 DESCRIPTION OF WORK

A. The work covered by this Section of the specifications includes the furnishing of labor, materials, equipment, transportation, permits, inspections and incidentals and the performing of operations required to install the ductwork systems indicated.

1.3 SUBMITTALS

A. Substitutions: Your attention is directed to Section 15000-"Substitutions", relative to competition and the (ONLY) notation. Familiarity with this section should be achieved before reading the PRODUCTS section of this specification.

B. The items for which the submittals paragraph in Section 15000, Supplemental General Mechanical Requirements, apply are as follows:

1. Ductwork.
2. Ductwork accessories.
3. Firestopping materials and methods.
4. Louvers and dampers.
5. Ductwork sealing products.

PART 2 - PRODUCTS

2.1 DUCTWORK

A. Classification of Ductwork: Low pressure ductwork: up to 2" W.G. static pressure. The duct pressure class shall be determined by multiplying the total static pressure scheduled in the fan schedules by 1.2.

B. Materials: Unless otherwise indicated low pressure ductwork shall be galvanized steel. Galvanized sheet metal shall be new galvanized steel sheets of lock forming quality with zinc coating that will not flake or peel under forming operation.

C. Construction for Low Pressure Round and Rectangular Ductwork:

1. Material: Galvanized steel conforming to ASTM A527, weight of galvanized coating shall be not less than 1-1/4 ounces total for both sides of one sq.ft. of a sheet. Construction, metal gage, and reinforcements shall conform with SMACNA "Duct Construction Standards" and NFPA 90A for 2" W.G. pressure class.

2. Fittings: Shall be constructed in accordance with SMACNA Standards and shall be of the types indicated (ONLY).

3. Longitudinal joints shall be Pittsburgh lockseam (ONLY). Button punch snap locks are not acceptable.

4. Joints shall be sealed to SMACNA seal class B.

2.2 DUCTWORK ACCESSORIES

A. Access Doors:

1. Low Pressure Duct Systems: Ruskin Model ADC2, 12"x12" size, 24 gauge galvanized steel, steel on both sides of door, foam gasket seals, 1" insulation, 2 cam locks, no hinge.

B. Counter Balanced Dampers (CBD): Aluminum frame and blades, extruded vinyl edge seals, 2-1/4" deep, set 0.06" WG.

C. Backdraft Dampers (BDD): Ruskin Model CBD2 or American Warming and Ventilating aluminum frame and blades, extruded vinyl edge seals, field set at 0.10" W.G. pressure differential for full open operation.

D. Flexible Duct Connections: Ventfabrics, Inc. neoprene coated glass fabric.

E. Drawbands for Flexible Ducts: Clinch type stainless steel with screwdriver adjustment, or nylon with lever action tightening tool provided by the drawband manufacturer.

F. Turning Vanes: (Low Pressure):

1. Solid blade, mounted with the long edge down stream in accordance with duct construction details indicated. Submit a 12"x12" sample elbow for review prior to fabrication.

G. Joint Sealer:

1. Hardcast DT tape and FTA-20 activator.

2. Provide waterproof sealer where watertight seal is specified.

H. Louvers (L): Ruskin model ELF6375DX. Extruded aluminum construction, 0.081" thick, aluminum extrusions, drainable blade, 1/2" expanded metal bird screen, size and performance as scheduled. AMCA certified leakage rate shall be a maximum of 0.01 ounces of water per square foot of free area at 1250 FPM free area velocity. Provide Kynar 500 finish, color selected by Architect. Provide frame styles compatible with building construction, see architectural details. Provide concealed architectural or standard visible mullions in multi-panel louver assemblies as indicated on the drawings. Inactive / blanked-off louvers shall have a double wall, insulated sheetmetal closure on the interior face of the louver. The closure shall have a 2" thickness of 1.5 pcf rigid fiberglass board insulation with a foil face. Both sides of the sheetmetal shall be painted flat black.

PART 3 - EXECUTION

3.1 SURFACE CONDITIONS

A. Inspection:

1. Prior to work of this Section, carefully inspect the installed work of other trades and verify that such work is complete to the point where this installation may properly commence.

2. Verify that the duct systems may be installed in accordance with pertinent codes and regulations and the reviewed Submittals.

3.2 INSTALLATION OF DUCTWORK AND AIR DEVICES

A. Provide and erect in accordance with the best practice of the trade ductwork shown on the drawings and as required to complete the intended installation. Make offsets as shown or required to place ductwork in proper position to avoid conflicts with other work and to allow the application of insulation and finish painting to the satisfaction of the Architect. Sizes given are "inside - clear" dimensions and not necessarily that of sheet metal. Ducts shall be arranged to adjust to "field conditions". The Sheet Metal trades shall coordinate his work with other trades. Work shall conform to ASHRAE duct construction recommendations, SMACNA "Duct Construction Standards", NFPA, and the requirements of BOCA code.

B. Joint Sealing: See PRODUCTS section.

C. Longitudinal joints: See PRODUCTS section.

D. Turns shall be made with long radius elbows or, if physically impossible to use long radius elbows, shall be square turns with specified turning vanes. CAUTION: Turns not conforming to this requirement shall be ordered removed and replaced with properly built turns.

E. Access Doors: Provide access doors for concealed apparatus requiring service and inspection in the duct system including but not limited to dampers, sensors and motors, and upstream and downstream from duct coils.

F. Duct Sleeves and Prepared Openings: Install duct sleeves and prepared openings for duct mains, duct branches, and ducts passing through walls, roofs, and ceilings. Insure the proper size and location of sleeves and prepared openings. Allow one-inch clearance between duct and sleeve or one-inch clearance between insulation and sleeve for insulated ducts, except at grilles, registers, and diffusers.

G. Duct Supports: Unless otherwise indicated, provide one-inch wide by 16 gage galvanized steel sheet metal strips on each side of ducts. Anchor risers in the center of the vertical run to allow ends or riser free vertical movements. Attach supports only to structural framing members. Do not anchor supports to metal decking unless a means is provided (architectural review required) for preventing the anchors from puncturing the metal decking. Where supports are required between structural framing members, provide suitable intermediate metal framing. Where C clamps are used, use retainer clips.

H. Flexible Collars and Connections: Provide flexible collars between fans and ducts or casings and where ducts are of dissimilar metals, as indicated or required. For round ducts, securely

fasten flexible connections using stainless steel clinch-type draw-band. Nylon drawbands may be used if installed using the drawband manufacturer's lever-action tightening tool. For rectangular ducts, lock flexible connections to metal collars.

I. Any deviation in the duct system must be submitted as a shop drawing and stamped. CAUTION: Any deviation not submitted and favorably reviewed will be ordered removed from the system and replaced with that which is shown on the Drawings.

J. Discrepancies between actual field conditions and the Contract Documents shall be brought to the attention of the Architect prior to fabrication.

K. Field Changes to Ductwork: Field changes of ducts such as those required to suit the sizes of factory-fabricated equipment actually furnished shall be designed to minimize expansion and contraction. Use 4:1 transitions in field changes as well as modifications to connecting ducts.

L. Transitions with a slope greater than 4 to 1 shall be ordered removed from the system and replaced with a transition, which meets this criteria.

M. Joints and seams at intake and exhaust plenums and joints on intake and exhaust ductwork for a distance of 3 feet from the plenum shall be sealed watertight on the bottom and side joints and seams.

N. Isolation dampers at intake and exhaust louvers and vent hoods shall be sealed to the ductwork to provide an airtight assembly with similar performance characteristics to the isolation damper.

3.3 CLOSING IN WORK

A. Cover up or enclose work after it has been properly and completely tested and reviewed.

B. No additional cost to the Owner will be allowed for uncovering or recovering any work that is covered or enclosed prior to required test and review.

3.4 TEST AND ADJUST

A. Ductwork shall be leak tested in accordance with Section 15990 "Testing and Balancing Air and Water Systems". Provide end cap and closure pieces. Close off and seal openings in ductwork to be tested. Ductwork shall be tested before it is insulated.

B. Before operating any system, the system shall be cleaned out to remove dust and foreign materials.

C. After the installation is complete and ready for operation, test the system under normal operating conditions in the presence of the Architect and demonstrate that the system functions as designed.

D. Correct defects, which develop during the test period, conduct additional testing until defect free operation is achieved.

3.5 CLEANUP AND CORROSION PREVENTION

A. Ductwork and equipment shall be thoroughly cleaned. Dirt, dust, and debris shall be removed and the premises left in a clean and neat condition.

B. Before covering is applied to duct systems, clips, rods, clevises and other hanger attachments, and before uncovered piping is permitted to be concealed, corrosion and rust shall be wire brushed and cleaned and in the case of iron products, a coat of approved protective paint applied to these surfaces.

3.6 INSTRUCTIONS

A. On completion of the project, instruct the Owner's representative in the care and operation of the system. The total period of instruction shall not exceed four (4) hours. The time of instruction shall be arranged with the Owner. In addition to the prime Mechanical Contractor, the control system Contractor, Balancing Contractor, and Owner's representative shall be present and participate in the Owner's instruction.

3.7 FIRESTOPPING

A. All penetrations of fire-rated assemblies including walls and floors by mechanical system components (piping, ductwork, conduits, etc.) shall be firestopped as specified.

* END OF SECTION *

SECTION 15900

AUTOMATIC TEMPERATURE CONTROLS

PART 1 - GENERAL

1.1 DESCRIPTION

A. The work covered by this Section of the specifications includes the furnishing of labor, materials, equipment, transportation, permits, inspections and incidentals and the performing of operations required to install the automatic temperature control system indicated. The system shall be a electric/electronic (not DDC) system to provide the sequences as described in these specifications. The ATC system shall be complete including required components including, low voltage and line voltage wiring. The system shall function as a completely independent system and shall include a wall mounted interface panel for adjusting system settings. The system shall not require a computer terminal or laptop be present to adjust any systems settings.

1.2 RELATED DOCUMENTS

A. The drawings and the specifications including SECTION 15000 "SUPPLEMENTAL MECHANICAL GENERAL REQUIREMENTS" are hereby made a part of the work of this section.

1.3 QUALIFICATIONS: The ATC system shall be one of the following: Honeywell, Siemens, Trane, JCI, IB Controls or Maine Controls.

1.4 SUBMITTALS

A. Substitutions: Your attention is directed to Section 15000 relative to competition and the (ONLY) notation. Familiarity with this section should be achieved before reading the PRODUCTS section of this specification.

B. The items for which the shop drawings paragraph in Section 15000, Supplemental General Mechanical Requirements, apply are as follows:

1. Temperature control system schematic including variables, flow diagrams, ladder diagrams, and point to point wiring diagrams, indicating set points, reset ranges, throttling ranges, controller gains, differentials, operating ranges, normal positions, controller action, dial ranges, voltages, currents, mounting locations, indicators, and terminal strip points.

2. Sequence of operation for each system and function.

3. Generic, functional description of each control component indicated.

4. Equipment interlocks required by sequence of operation.

5. Automatic valve schedule showing flow, Cv, and pressure drop.

6. Manufacturer's Data:

a. Dampers, valves and operators.
b. Controllers, including wiring and connection diagrams.
c. Thermostats, temperature sensors, including wiring and connection diagrams.
d. Temperature and pressure indicators.
e. Pressure sensors, including wiring and connection diagrams.
f. Switches, relays, transmitters, transformers, including wiring and connection diagrams.

PART 2 - PRODUCTS

2.1 CONTROL PANELS

A. In general, relays, transformers, or other control devices (not including room thermostats or duct-mounted instruments) shall be grouped and mounted in a factory-built cabinet enclosure.

2.2 AUTOMATIC CONTROL DAMPERS

A. Automatic dampers not furnished with equipment shall be furnished under this paragraph. Automatic dampers shall be constructed and installed in accordance with the following specifications:

1. Damper Blades: All automatic dampers, including dampers for static pressure control, shall be of the balanced type, factory-fabricated, with fully gasketed galvanized steel airfoil blades, mounted in welded frames. Damper blades shall be not more than 8 inches wide, shall have interlocking edges, edge and jamb seals and be capable of operation against 4" static pressure differential. Dampers shall be Arrow "Arrow-Foil" Model PBDAF-206, OBDAF-207, Ruskin Model CD-60 or Tamco Series 1000.

2. Modulating Dampers: All modulating dampers shall be of the opposed blade type.

3. Damper Size and Bearings: Damper blades shall have steel trunnions mounted in oil-impregnated bearings. Dampers shall be not more than 48 inches in length between bearings.

4. Frames: Damper frames shall be of welded channel or angle-iron, with heavy steel corner gussets and braces or stiffened with steel tie-rods where necessary. Frames shall be painted with aluminum paint to prevent rusting.

5. Dampers shall be guaranteed to close tightly, and shall provide substantially the full area of the opening when open. All outdoor air intakes and all exhaust ducts to outside and all fresh air, return air and exhaust air dampers in systems shall have damper blades with inflatable seals or other devices to guarantee low leakage, not to exceed 6 CFM/SF at 1 in. WG pressure differential.

6. Damper Linkages: Damper-operating links shall be cadmium plated steel or brass rods, adjustable in length with ball and socket joints and of such proportions that they will withstand, without appreciable deflection, a load equal to not less than twice the maximum operating force of the damper motor. Linkages shall be concealed in the frame.

B. Damper Actuators: For each automatically controlled damper, a suitable damper actuator or actuators shall be provided in accordance with the following specifications:

1. Actuator: Damper actuators shall be electronic, direct-coupled, spring-return type and have a rating of not less than twice the torque needed for actual operation of the damper.

2. Adjustments: Provide adjustable stops for the open and closed positions.

3. Mounting: Damper actuators shall be direct-coupled over the shaft. The damper actuators and mounting base shall not be mounted directly on cold or insulated ducts and casings, but shall be mounted outside the insulated covering in such a manner as to prevent sweating and interference with the insulation.

4. Where indicated, damper actuators shall be provided with an auxiliary switch rated at 120 V AC, and accept a 0 to 20 ma input.

2.3 TEMPERATURE SENSORS

A. Temperature Sensors: RTD Elements, +0.1% at 70°F, sensors shall be securely attached to a suitable base mounted on the wall or other building surface. Each sensor shall be located where shown or, if not shown, where it will respond to the average temperature in the room. Sensors, generally, shall be mounted as shown on plans, and shall not be mounted on outside walls if other locations are possible. If located on outside wall, it shall have an insulated base. Sensors shall have locked or concealed adjustment devices, by means of which the operating points can be adjusted through a range of not less than 10 degrees above and below the operating points specified. Room sensors shall not be provided with thermometers.

2.4 OPERATOR'S TERMINAL

A. The operator's terminal shall be a wall mounted interface panel such as Tekmar, Heat timer or Honeywell wall mounted operators terminal. Each screen shall be capable of displaying and changing all controlled variables.

B. Locate in Stairwell near HV-1 – but not in a travel area.

2.5 SEQUENCE OF CONTROL

A. Provide and install electronic/electric (not DDC) components to enable the mechanical system to operate in the following sequences:

1. Glycol Hot Water Circulators (GP-1): At outside air temperatures below 40°F (adjustable), GP-1 shall operate continuously.

2. Exhaust Fan (EF-1):

   a. Shall run continuously 24/365.

4. Heating/Ventilating Unit (HV-1):

   a. Fan shall run continuously 24/365. Outside air damper to open positon.

b.. Modulate the hot water heating coil valve to maintain a discharge air temperature of 70 deg. F. (Adjustable).

c. Provide full face freeze sensing on discharge of hot water coil. If freezing conditions are sensed then close the outside air damper, open the control valve 100% and disable the fan for HV-1 and EF-1. Provide an light on the wall below HV-1 with indication of "Freeze Lockout".

5. Cabinet Unit Heaters CUH-1 (both new Toll Booths)

a. Manufacturer to provide 3-way valve.

b. ATC contractor to provide, wire and install thermostat.

6. Wire and install thermostat provided by the heat pump manufacturer for the two Toll Booth heat pumps RHUP-1

PART 3 - EXECUTION

3.1 SURFACE CONDITIONS

A. Inspection:

1. Prior to work of this Section, carefully inspect the installed work of other trades and verify that such work is complete to the point where this installation may properly commence.

2. Verify that the automatic temperature control and system may be installed in strict accordance with pertinent codes and regulations and the reviewed Shop Drawings.

3.2 INSTALLATION

A. Provide wiring, and conduit to connect the ATC components for an operational ATC system. Wiring and installation shall conform to NFPA 70.

B. Identification: Label or code each field wire at each end. Permanently label or code each point of field terminal strips to show the instrument or item served. Color-coded cable with annotated cable diagrams may be used to accomplish cable identification.

C. Temperature Sensors: Stabilize sensors to permit on-the-job installation that will require minimum field adjustment or calibration. Temperature sensor assemblies shall be readily accessible and adaptable to each type of application to allow quick, easy replacement and servicing without special tools or skills. Strap-on sensor mountings, using helical screw stainless steel clamps, shall be permitted on new piping for unit heater or other on-off operation only, after pipe is cleaned to bright metal. Strap-on bulb and pipe shall be insulated after installation. Strap-on sensor mountings are also permitted for hot water piping sizes up to 2 inches. Other liquid temperature sensors shall be provided with wells.

D. Duct Sensors: Provide sensors in ductwork; specific location within duct shall be selected to accurately sense air properties. Do not locate sensors in dead air spaces or positions obstructed by ducts or equipment. Installation shall be within the vibration and velocity

limits of the sensing element. Where an extended surface element is required to sense the average or lowest air temperature, position and securely mount sensor within duct in accordance with sensor manufacturer's recommendations. Temperature sensing elements shall be thermally isolated from brackets and supports. Provide separate duct flange for each sensing element; securely seal ducts where elements or connections penetrate duct. Seal penetrations of duct insulation vapor barrier with vapor barrier coating compound to provide a vapor-tight covering. Mount sensor enclosures to allow easy removal and servicing without disturbance or removal of duct insulation or vapor barrier. On downstream side of each sensor, provide access doors.

E. Pipe Sensors: Provide wells for sensors measuring temperatures in pressure vessels or in pipes. Wells shall be noncorrosive to the medium being measured and shall have sufficient physical strength to withstand the working and test pressures and velocities. Locate wells to sense continuous flow conditions. Do not install wells using extension couplings. Where piping diameters are smaller than the length of the wells, provide wells in the piping at elbows to effect proper flow across the entire area of the well. Wells may either look upstream or downstream. Provide thermal transmission material within the well to speed the response of temperature measurement. Provide wells with sealing nuts to contain the thermal transmission material and allow for easy removal. Wells shall not restrict flow area to less than 70 percent of line-size-pipe normal flow area. Increase piping size as required to avoid restriction.

3.3 ADJUSTMENTS

A. Adjust controls and equipment to maintain the conditions indicated, to perform the functions indicated, and to operate in the sequence specified.

3.4 INSTRUCTING OPERATING PERSONNEL

A. Upon completion of the work and when designated by the Architect, furnish the services of a competent technician regularly employed by the temperature control manufacturer for the instruction of Owner in the operation and maintenance of each automatic space temperature control system. The period of instruction shall be for not less than two 8-hour working days and shall include videotape demonstration of controllers.

3.5 FIELD INSPECTION AND TESTS

A. Tests shall be performed or supervised by employees of the ATC system or manufacturer of the ATC system, or by an authorized representative of the ATC manufacturer. Give Architect 14 calendar days advance written notice prior to the date of the field acceptance testing. If the Architect witnesses tests, such tests shall be subject to approval. If the Architect does not witness tests, provide performance certification.

B. Plan for Inspections and Tests: Furnish a written inspections and tests plan at least 60 days prior to the field acceptance test date. This plan shall be developed by the manufacturer of the ATC system. The plan shall delineate the inspections and testing procedures required for the ATC system to demonstrate compliance with the requirements specified. Additionally, the test plan shall indicate how ATC system is to be tested, what variables will be monitored during test, names of individuals performing tests, and what criteria for acceptance should be used. Indicate how operation of H&V system and ATC system in each seasonal condition will be simulated.

C. Field Acceptance Testing: Upon completion of 72 hours of continuous H&V and ATC systems operation and before final acceptance of work, test the automatic temperature control systems in service with the heating, ventilating and air conditioning systems to demonstrate compliance with contract requirements. Test controls through each cycle of operation, including simulation of each season insofar as possible. Test safety controls to demonstrate performance of required function. Adjust or repair defective or malfunctioning automatic space temperature control equipment or replace with new equipment. Repeat tests to demonstrate compliance with contract requirements.

3.6 FIRESTOPPING

A. All penetrations of fire-rated assemblies including walls and floors by mechanical system components (piping, ductwork, conduits, etc.) shall be firestopped as specified.

`* END OF SECTION *

MAINE TURNPIKE AUTHORITY

SPECIFICATIONS

PART IV – APPENDICES

APPENDIX A

SUBSURFACE WASTEWATER DISPOSAL SYSTEM APPLICATION

SUBSURFACE WASTEWATER DISPOSAL SYSTEM APPLICATION

Maine Department of Human Services
Division of Health Engineering, 10 SHS
(207) 287-5672 Fax: (207) 287-3165

PROPERTY LOCATION

City, Town, or Plantation: Falmouth

Street or Road: Exit 52 Toll Plaza

Subdivision, Lot #:

>> CAUTION: LPI APPROVAL REQUIRED <<

Town/City _____ Permit # _____

Date Permit Issued ____/____/____ Fee: $ _____ Double Fee Charged ☐

_____ L.P.I. # _____
Local Plumbing Inspector Signature

☐ Owner ☐ Town ☐ State

The Subsurface Wastewater Disposal System shall not be installed until a Permit is issued by the Local Plumbing Inspector. This Permit shall authorize the owner or installer to install the disposal system in accordance with this application and the Maine Subsurface Wastewater Disposal Rules.

Municipal Tax Map # _____ Lot # _____

OWNER/APPLICANT INFORMATION

Name (last, first, MI): Maine Turnpike Authority ■ Owner ☐ Applicant

Mailing Address of Owner/Applicant:

Daytime Tel. #:

OWNER OR APPLICANT STATEMENT
I state and acknowledge that the information submitted is correct to the best of my knowledge and understand that any falsification is reason for the Department and/or Local Plumbing Inspector to deny a Permit.

_____ _____
Signature of Owner or Applicant Date

CAUTION: INSPECTION REQUIRED
I have inspected the installation authorized above and found it to be in compliance with the Subsurface Wastewater Disposal Rules Application.

_____ _____
Local Plumbing Inspector Signature (1st) date approved

_____ _____
(2nd) date approved

PERMIT INFORMATION

TYPE OF APPLICATION

☐ 1. First Time System
■ 2. Replacement System
Type replaced: Eljen Indrains
Year installed: 2005
☐ 3. Expanded System
☐ a. <25% Expansion
☐ b. >= 25% Expansion
☐ 4. Experimental System
☐ 5. Seasonal Conversion

THIS APPLICATION REQUIRES

■ 1. No Rule Variance
☐ 2. First Time System Variance
☐ a. Local Plumbing Inspector Approval
☐ b. State & Local Plumbing Inspector
☐ 3. Replacement System Variance
☐ a. Local Plumbing Inspector Approval
☐ b. State & Local Plumbing Inspector
☐ 4. Minimum Lot Size Variance
☐ 5. Seasonal Conversion Permit

DISPOSAL SYSTEM COMPONENTS

☐ 1. Complete Non-engineered System
☐ 2. Primitive System (graywater & alt. toilet)
☐ 3. Alternative Toilet, specify: _____
☐ 4. Non-engineered Treatment Tank (only)
☐ 5. Holding Tank, _____ gallons
■ 6. Non-engineered Disposal Field (only)
☐ 7. Separated Laundry System
☐ 8. Complete Engineered System (2000 gpd or more)
☐ 9. Engineered Treatment Tank (only)
☐ 10. Engineered Disposal Field (only)
☐ 11. Pre-treatment, specify: _____
☐ 12. Miscellaneous Components

SIZE OF PROPERTY

+ - 3,500 ☐ SQ. FT. ■ ACRES

SHORELAND ZONING

☐ Yes ■ No

DISPOSAL SYSTEM TO SERVE

☐ 1. Single Family Dwelling Unit, No. of Bedrooms: ____
☐ 2. Multiple Family Dwelling, No. of Units: ____
■ 3. Other: Toll Plaza Office - 5 Employees
(specify)
Current Use ☐ Seasonal ■ Year Round ☐ Undeveloped

TYPE OF WATER SUPPLY

☐ 1. Drilled Well ☐ 2. Dug Well ☐ 3. Private
■ 4. Public ☐ 5. Other

DESIGN DETAILS (SYSTEM LAYOUT SHOWN ON PAGE 3)

TREATMENT TANK

■ 1. Concrete
■ a. Regular
☐ b. Low Profile
☐ 2. Plastic
☐ 3. Other: _____
CAPACITY: 1,000 GAL

DISPOSAL FIELD TYPE & SIZE

☐ 1. Stone Bed ☐ 2. Stone Trench
■ 3. Proprietary Device
■ a. cluster array ☐ c. Linear
☐ b. regular load ☐ d. H-20 load
☐ 4. Other: _____
SIZE: 320 ■ sq. ft. ☐ lin. ft.

GARBAGE DISPOSAL UNIT

■ 1. No ☐ 2. Yes ☐ 3. Maybe
If Yes or Maybe, specify one below:
☐ a. multi-compartment tank
☐ b. ___ tanks in series
☐ c. increase in tank capacity
☐ d. Filter on Tank Outlet

DESIGN FLOW

97 gallons per day
BASED ON:
■ 1. Table 4A (dwelling unit(s))
☐ 2. Table 4C (other facilities)
SHOW CALCULATIONS
— for other facilities —
☐ 3. Section 4G (meter readings)
ATTACH WATER METER DATA

SOIL DATA

PROFILE: 3 CONDITION: D
at Observation Hole # TP-1
Depth 13 "
of Most Limiting Soil Factor
Groundwater

DISPOSAL FIELD SIZING

■ 1. Medium—2.6 sq. ft. / gpd
☐ 2. Medium—Large 3.3 sq. f.t / gpd
☐ 3. Large—4.1 sq. ft. / gpd
☐ 4. Extra Large—5.0 sq. ft. / gpd

EFFLUENT/EJECTOR PUMP

■ 1. Not Required
☐ 2. May Be Required
☐ 3. Required
Specify only for engineered systems:
DOSE: _____ gallons

LATITUDE AND LONGITUDE
at center of disposal area

Lat. N43 d 44 m 00.49 s
Lon. W70 d 15 m 18.54 s
if g.p.s. state margin of error: 20'

SITE EVALUATOR STATEMENT

I certify that on 12-30-14 (date) I completed a site evaluation on this property and state that the data reported are accurate and that the proposed system is in compliance with the State of Maine Subsurface Wastewater Disposal Rules (10-144A CMR 241).

_____ 034 02/16/15
Site Evaluator Signature SE # Date

Richard A. Sweet 797-2110 dick@sweetassociates.com
Site Evaluator Name Printed Telephone Number Email Address

Designed with SeptiCAD v3
Note: Changes to or deviations from the design should be confirmed with the Site Evaluator.

SUBSURFACE WASTEWATER DISPOSAL SYSTEM APPLICATION

Maine Department of Human Services
Division of Health Engineering, Station 10
(207) 287-5672 Fax: (207) 287-3165

Town, City, Plantation	Street, Road, Subdivision	Owner or Applicant Name
Falmouth	Exit 52 Toll Plaza	Maine Turnpike Authority

SITE PLAN Scale 1" = 50 ft.

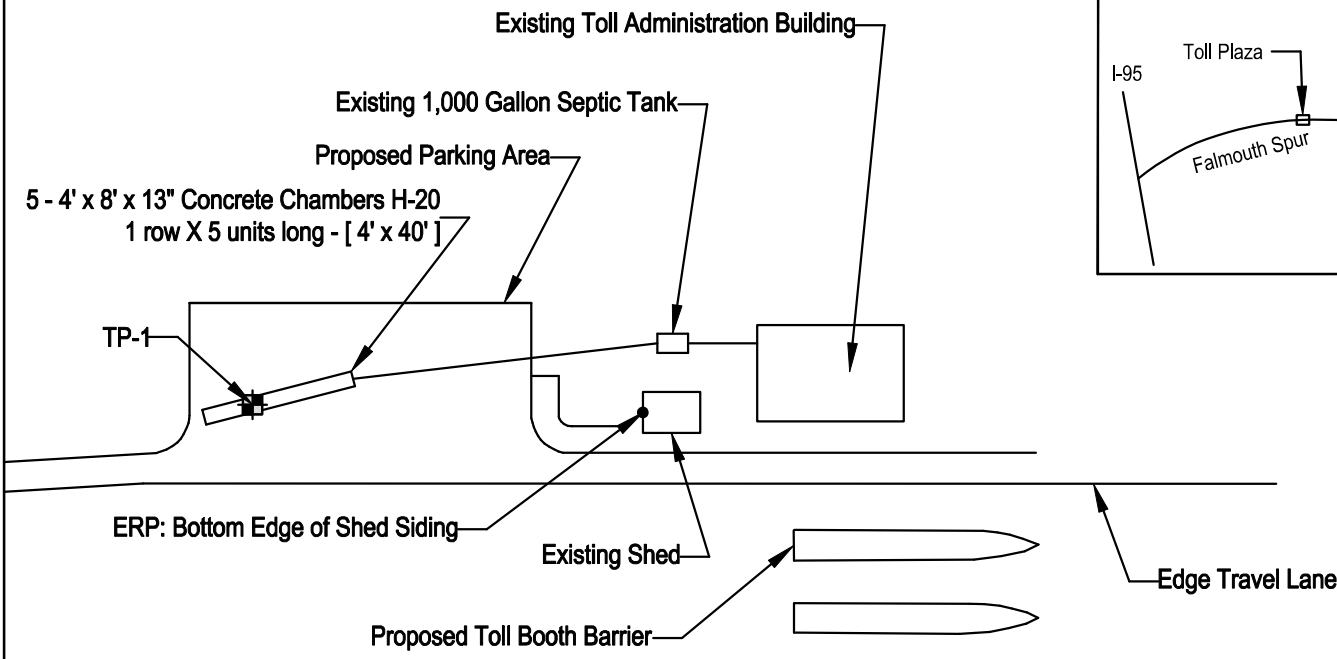

SITE LOCATION PLAN

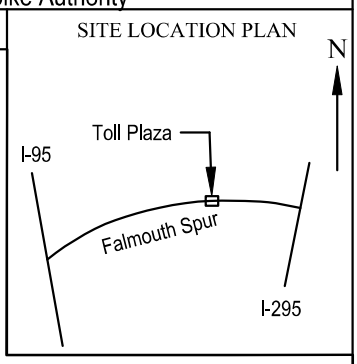

NOTES:
1. Min. 1/8"/ft (1%) pitch of pipe from septic tank to disposal field.
2. Remove existing Eljen Indrain disposal field (in same footprint) including any blackened soil before installing chambers.

SOIL PROFILE DESCRIPTION AND CLASSIFICATION (Location of Observation Holes Shown Above)

Observation Hole # TP-1 ■ Test Pit ☐ Boring

" Depth of organic horizon above mineral soil

Depth below mineral soil surface (inches)	Texture	Consistency	Color	Mottling
0–6	Fine Sandy Loam	Loose	Brown	
6–12	Gravelly Coarse Sand	Loose	Yellowish Brown	
30–48	Sand	Loose	Yellowish Brown	

Limit of Excavation at 48 inches

Soil Profile	Classification Condition	Slope Percent	Limiting Factor Depth	
5	B	0-3	>48"	■ Groundwater ☐ Restrictive Layer ☐ Bedrock

Observation Hole # _____ ☐ Test Pit ☐ Boring

" Depth of organic horizon above mineral soil

Depth below mineral soil surface (inches)	Texture	Consistency	Color	Mottling
0–48				

Soil Profile	Classification Condition	Slope Percent	Limiting Factor Depth	
				☐ Groundwater ☐ Restrictive Layer ☐ Bedrock

Site Evaluator Signature | SE # 034 | Date 02/16/15

SUBSURFACE WASTEWATER DISPOSAL SYSTEM APPLICATION

Maine Department of Human Services
Division of Health Engineering, Station 10
(207) 287-5672 Fax: (207) 287-3165

Town, City, Plantation	Street, Road, Subdivision	Owner or Applicant Name
Falmouth	Exit 52 Toll Plaza	Maine Turnpike Authority

SUBSURFACE WASTEWATER DISPOSAL PLAN

Scale: 1" = 20 ft

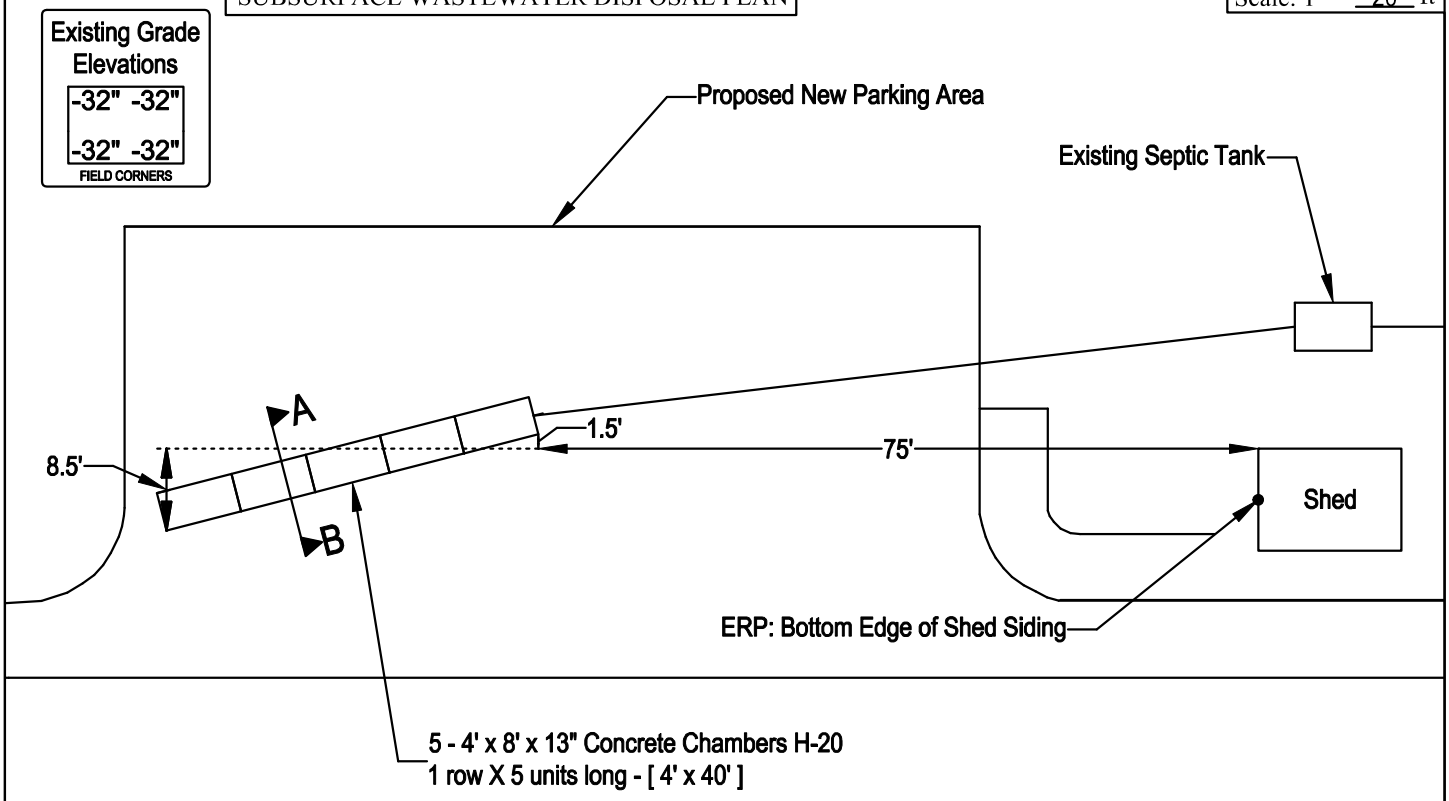

BACKFILL REQUIREMENTS		CONSTRUCTION ELEVATIONS		ELEVATION REFERENCE POINT
Depth of Backfill (upslope)	0-0"	Finished Grade Elevation (at Row 1)	-37"	Location & Description: Bottom Edge of Shed Siding
Depth of Backfill (downslope)	0-0"	Top of Proprietary Device (at Row 1)	-49"	Reference Elevation is 0.0" or:
		Bottom of Disposal Field (at Row 1)	-62"	

NOTE: REMOVE ALL ELJEN INDRAINS AND BLACKENED SOIL. USE GRAVELLY COARSE SAND WITHIN 3' OF CRUSHED STONE SURROUNDING CONCRETE CHAMBERS.

DISPOSAL FIELD CROSS SECTION

Scales:
Verticle: 1" = 5
Horizontal: 1" = 5

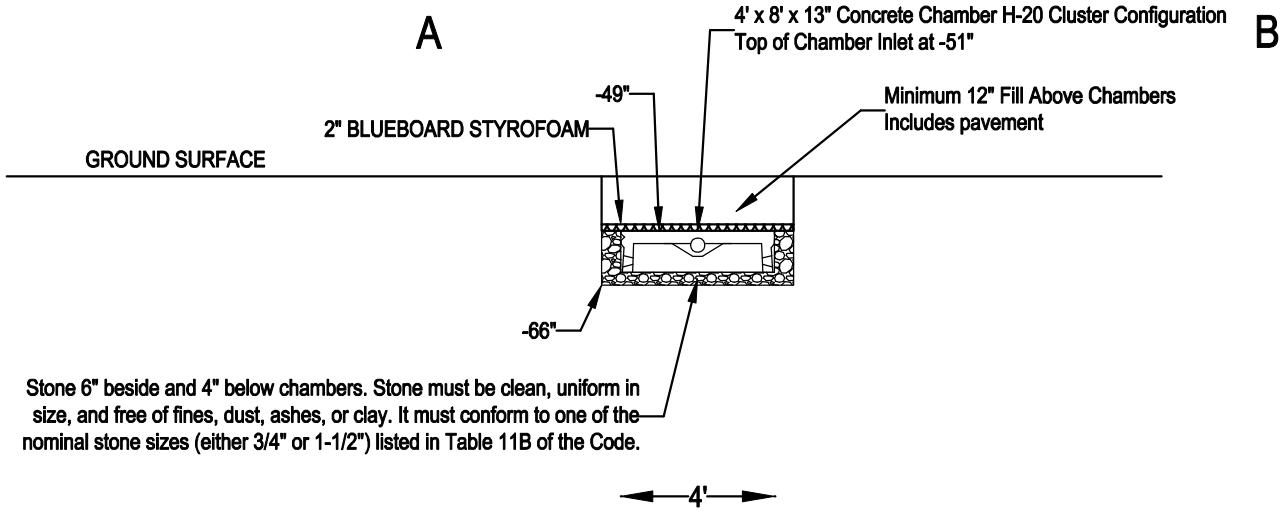

Site Evaluator Signature	SE #	Date	
	034	02/16/15	Page 3 of 3
			HHE-200 Rev. 10/02

APPENDIX B

LEAD PAINT ASSESSMENT

and

ASBESTOS REPORT

Abatement Professionals

590 County Road, Suite 2, Westbrook ME 04092 Tel (207) 773-1276 * Fax (207) 772-1203

January 31, 2015

John Doughty
HNTB Corp
340 County Road, Suite 6C,
Westbrook, Maine 04092

Re: Lead/Asbestos Demolition Renovation Impact Assessment, of several Maine Turnpike Toll facilities

Dear Mr. Doughty:

Abatement Professionals Corporation (APC) is providing you with the Lead/asbestos bulk testing results for the samples collected from readily accessible building materials that may be impacted By demolition/renovations activities as outlined in below. APC is a fully licensed certified firm with the Maine DEP as a consultant for asbestos and lead as outlined in their chapter 424 and 425 standards. The inspection of these sites took place on January 14, 2015 and began at West Gardiner Toll Plaza and ended up later that day at the Biddeford toll plaza exit. Robert Rickett Jr was the chief inspector and I was assisted by Nathan Perry a certified asbestos and lead paint supervisor. During this inspection we collected a total of Seven (7) bulk samples of suspect asbestos materials and Fourteen (14) samples of suspect lead based paints. The scope of sample collection was based on the information you gave me in your email. Items that were not sampled because of the sub-freezing temperatures were the roofing materials, in order to collect samples of the roofs we would have needed to core drill the roofs for samples and we wouldn't have been able to seal them to prevent water leakage. Excess to some of the toll booth pits was very limited due to steel plates being bolted or welded in place. The ones I was able to get into were clean for suspect asbestos materials.

HNTB Billing Job#: 57576-DS-437

- **Exit 32 – Biddeford Toll Plaza**
  - Lead testing of canopy posts, canopy framing, and canopy underside.
    - *Samples L-13 and L-14 of the painted surfaces on the Canopy and support posts came back as Less Than the detection limit of 0.01 % which means the material is negative for lead paints,*
  - Asbestos testing of canopy, booths and booth pits.
    - *The canopy, booths and booth pits had no suspect materials located on/in them.*
- **Exit 36 – Saco Toll Plaza**
  - Lead testing of canopy posts and canopy framing.
    - *Samples L-11 and L-12 of the painted surfaces on the Canopy and support posts came back as Less Than the detection limit of 0.01 % which means the material is negative for lead paints,*
  - Asbestos testing of canopy, booths and booth pits.
    - *The canopy, booths and booth pits had no suspect materials located on/in them.*

- **Exit 46 – Northbound Entrance Toll Plaza**
  - Lead testing of canopy posts only.
    - *Samples L-10 painted support posts came back as 0.011% the detection limit of 0.01 % which means the material is marginal for lead paints,*
    -
- **Exit 53 – West Falmouth Toll Plaza**
  - Lead testing of canopy posts, canopy framing, and canopy underside.
    - *Samples L-3, of the Canopy framing back as lead containing at 2.1 % which would be a regulated work activity*
    - *L-4, of the support columns came back as lead containing at 2.7 % which would be a regulated work activity.*
    - *L-5 of the interior side building came back as 0.11 which is marginal for lead paints. Giving the fact you are taking down this building then the Paint on this structure would be an OSHA compliant Demo by heavy equipment project.*
    - *L-6 of the painted exterior of the brick side building came back as Less Than the detection limit of 0.01 % which means the material is negative for lead paints,*

  - Asbestos testing of canopy, booths, booth pits and throughout toll side building.
    - *B-7 of the asbestos samples indicate that asbestos containing caulking was found on the exterior of the side brick building, this material is regulated for proper removal and disposal by the Maine DEP and OSHA.*

HNTB Billing Job#: 57576-DS-456

- **Falmouth Spur Toll Plaza**
  - Lead testing of canopy posts and canopy framing (only on older section of plaza).
    - *L-7 of the support columns came back as less than detection limits which indicates the paint is negative for lead.*
    - *L-8 of the canopy ceiling came back as 0.18 which is under the Maine DEP levels for lead, but does fall under the OSHA compliant work practices.*
    - *L-9 was collected from one of the toll booth doors and came back as 0.023 which again is only an OSHA compliant lead work practice.*
  - Asbestos testing of canopy, booths and booth pits (only on older section of plaza).
    - *The canopy, booths and booth pits had no suspect materials located on/in them.*

HNTB Billing Job#: 57576-DS-455

- **West Gardiner Toll Plaza (on I-95, south of Exit 102)**
  - Lead testing of canopy posts and canopy framing only.
    - *Samples L-1 and L-2 of the painted surfaces on the Canopy and support posts came back as Less Than the detection limit of 0.01 % which means the material is negative for lead paints,*

Abatement Professionals

590 County Road, Suite 2, Westbrook ME 04092 Tel (207) 773-1276 * Fax (207) 772-1203

Plaster ceilings and green floor tiles were tested for asbestos, and all came back as negative for asbestos content.

Attached are the lab results along with the chain of custody for both asbestos and lead sampling.

We appreciate the opportunity to service your asbestos/lead testing needs, should you require Further bulk or air quality sampling please feel free to contact us at any time.

Very truly,

Robert W. Rickett Jr CIE,CMR
President

EMSL Analytical, Inc.
161 John Roberts Road South Portland, ME 04106
Phone/Fax: (207) 517-6921 / (207) 517-6922
http://www.EMSL.com / portlandlab@emsl.com

EMSL Order ID:	621500049
Customer ID:	ABAT52
Customer PO:	140
Project ID:	

Attn:	Bob Rickett Abatement Professionals Corporation 590 County Road Suite #2 Westbrook, ME 04092	Phone: Fax: Collected: Received: Analyzed:	(207) 773-1276 (207) 772-1203 1/14/2015 1/15/2015
Proj:	MAINE TURNPIKE		

Summary Test Report for Asbestos Analysis of Bulk Material via EPA 600/R-93/116 Method via Polarized Light Microscopy

Client Sample ID: B-1 ***Lab Sample ID:*** **621500049-0001**
Sample Description: EXIT 53 BUILDING/PLASTER CEILING

TEST	Analyzed Date	Color	Non-Asbestos Fibrous	Non-Asbestos Non-Fibrous	Asbestos	Comment
PLM	1/14/2015	Brown/Gray	0%	100%	None Detected	

Client Sample ID: B-2 ***Lab Sample ID:*** **621500049-0002**
Sample Description: EXIT 53 BUILDING/PLASTER CEILING

TEST	Analyzed Date	Color	Non-Asbestos Fibrous	Non-Asbestos Non-Fibrous	Asbestos	Comment
PLM	1/14/2015	Brown/Gray	0%	100%	None Detected	

Client Sample ID: B-3 ***Lab Sample ID:*** **621500049-0003**
Sample Description: EXIT 53 BUILDING/PLASTER CEILING

TEST	Analyzed Date	Color	Non-Asbestos Fibrous	Non-Asbestos Non-Fibrous	Asbestos	Comment
PLM	1/14/2015	Brown/Gray	0%	100%	None Detected	

Client Sample ID: B-4 ***Lab Sample ID:*** **621500049-0004**
Sample Description: EXIT 52 TOLL BOOTH/9X9 GREEN FLOOR TILE

TEST	Analyzed Date	Color	Non-Asbestos Fibrous	Non-Asbestos Non-Fibrous	Asbestos	Comment
PLM Grav. Reduction	1/15/2015	Green	0.0%	100%	None Detected	

Client Sample ID: B-5 ***Lab Sample ID:*** **621500049-0005**
Sample Description: EXIT 52 TOLL BOOTH/9X9 GREEN FLOOR TILE

TEST	Analyzed Date	Color	Non-Asbestos Fibrous	Non-Asbestos Non-Fibrous	Asbestos	Comment
PLM Grav. Reduction	1/15/2015	Green	0.0%	100%	None Detected	

Client Sample ID: B-6 ***Lab Sample ID:*** **621500049-0006**
Sample Description: EXIT 52 TOLL BOOTH/9X9 GREEN FLOOR TILE

TEST	Analyzed Date	Color	Non-Asbestos Fibrous	Non-Asbestos Non-Fibrous	Asbestos	Comment
PLM Grav. Reduction	1/15/2015	Green	0.0%	100%	None Detected	

Client Sample ID: B-7 ***Lab Sample ID:*** **621500049-0007**
Sample Description: EXIT 53 BUILDING/WINDOW CAULKING

TEST	Analyzed Date	Color	Non-Asbestos Fibrous	Non-Asbestos Non-Fibrous	Asbestos	Comment
PLM Grav. Reduction	1/15/2015	Gray/White	0.0%	96.5%	**3.5% Chrysotile**	

Northeast Laboratory Services

P.O. Box 788
Waterville, Maine 04903-0788

227 China Road
Winslow, Maine 04901

Administrative Offices
Phone: 207-873-7711
Fax: 207-873-7022

Customer Service
Phone: 800-244-8378
Fax: 207-873-7022

ANALYSIS REPORT

Attention: Robert W Rickett Jr
Abatement Prof Corp
590 County Rd Suite 2
Westbrook ME 04092

Lab ID Number: AS00100
Project Number: 150115164413
P.O. Number: AS00094-07
Date Collected: 01/14/2015 12:00 AM
Date Received: 01/15/2015 04:00 PM
Date Reported: 01/26/2015

Sample Matrix: PAINT
Sample Description: L-7 Exit 52 Columns
Sample Type: Grab

Parameter	Result	Qualifier	Unit	Reporting Limit	Method	Preparation Date/Time	Analysis Date/Time	Analyst
Lead Total	<0.01		%	0.01	EPA 6010B	01/21/2015 12:00	01/22/2015 14:48	ITG

Comments:

This report shall not be reproduced, except in full, without written permission from Northeast Laboratory Services.

Authorized By: **Harold Flachsbart, Chemistry Laboratory Director** **Review Date:** 01/26/2015

Analytical results and reports are generated by NEL at the request of and for the exclusive use of the person or entity (client) named on this report. Results, reports or copies of same will not be released by NEL to any third party without the prior express written consent from the client named in this report. This report applies only to those samples taken at the time, place and location referenced by the client. This report makes no express or implied warranty or guarantee as to the sampling methodology used by the individual performing the sampling. The client is solely responsible for the use and interpretation of these results and NEL makes no express or implied warranties as to such use or interpretation. NEL is not able to make and does not make a determination as to the environmental soundness, safety or health of a property from only the samples sent to their laboratory for analysis. Unless otherwise specified by the Client, NEL reserves the right to dispose of all samples after the testing of such samples is sufficiently completed or after a thirty-day period, whichever period is greater. NEL liability extends only to the cost of the testing.

Winslow lab is accredited by the State of Maine Department of Health and Human Services, Maine Center for Disease Control and Prevention (ME00009).

Northeast Laboratory Services

P.O. Box 788
Waterville, Maine 04903-0788

227 China Road
Winslow, Maine 04901

Administrative Offices
Phone: 207-873-7711
Fax: 207-873-7022

Customer Service
Phone: 800-244-8378
Fax: 207-873-7022

ANALYSIS REPORT

Attention: Robert W Rickett Jr
Abatement Prof Corp
590 County Rd Suite 2
Westbrook ME 04092

Lab ID Number: AS00101
Project Number: 150115164413
P.O. Number: AS00094-07
Date Collected: 01/14/2015 12:00 AM
Date Received: 01/15/2015 04:00 PM
Date Reported: 01/26/2015

Sample Matrix: PAINT
Sample Description: L-8 Exit 52 Canopy
Sample Type: Grab

Parameter	Result	Qualifier	Unit	Reporting Limit	Method	Preparation Date/Time	Analysis Date/Time	Analyst
Lead Total *	0.18		%	0.01	EPA 6010B	01/21/2015 12:00	01/22/2015 14:51	ITG

Comments:

Please see the specific analysis comment(s) above.

This report shall not be reproduced, except in full, without written permission from Northeast Laboratory Services.

Authorized By: **Harold Flachsbart, Chemistry Laboratory Director** **Review Date:** 01/26/2015

Analytical results and reports are generated by NEL at the request of and for the exclusive use of the person or entity (client) named on this report. Results, reports or copies of same will not be released by NEL to any third party without the prior express written consent from the client named in this report. This report applies only to those samples taken at the time, place and location referenced by the client. This report makes no express or implied warranty or guarantee as to the sampling methodology used by the individual performing the sampling. The client is solely responsible for the use and interpretation of these results and NEL makes no express or implied warranties as to such use or interpretation. NEL is not able to make and does not make a determination as to the environmental soundness, safety or health of a property from only the samples sent to their laboratory for analysis. Unless otherwise specified by the Client, NEL reserves the right to dispose of all samples after the testing of such samples is sufficiently completed or after a thirty-day period, whichever period is greater. NEL liability extends only to the cost of the testing.

Winslow lab is accredited by the State of Maine Department of Health and Human Services, Maine Center for Disease Control and Prevention (ME00009).

Northeast Laboratory Services

P.O. Box 788 • Waterville, ME 04903-0788
207-873-7711 / Fax: 207-873-7022

Shipping: 227 China Road
Winslow, Maine 04901

CHAIN OF CUSTO

AS00094

Bill To: Abatement Professionals
Billing Address: 590 County Rd, West Brook
Report To: Bob@abatementprofessionals.com
Reporting Address: Robert Rickard
Phone: 7731276 Fax 7729203 email

PO #:
Quote #
Project Name Maine Turnpike Toll Booth

Lab Comments:

Preservation: 1 H_2SO_4, 2=HNO_3, 3=HCL, 4=NaOH, 5=Thio, 6=4°C, 7=None
Matrix Code Choose One: GW = Ground Water, WW = Waste Water, DW = Drinking Water, SW = Surface Water, O = Oil, WP = Wipe, S = Soil, F = Food, Other (Please List)
Sample Type Code: G = Grab, C = Composite

Sample Designation	Sample Date/Time	Preservation	Container Size, Type	QTY	Sample Type Code	Matrix Code	Analyses Requested	Lab Sample ID
L-1 West Gardner Canopy Framing	1-14-15		Baggie		G		AA for Lead	AS00094.1
L-2 West Gardner Support Post	" "						" "	95.1
L-3 Exit 53 Canopy Framing	" "							96.1
L-4 Exit 53 Columns	" "							97.1
L-5 Exit 53 Side Build Ceiling	" "							98.1
L-6 Exit 53 Exterior Brick	" "							99.1
L-7 Exit 52 Columns	" "							100.1
L-8 Exit 52 Canopy	" "							01.1
L-9 Exit 52 Toll Door	" "							02.1
L-10 Exit 52 Support Post Northbound	" "							03.1

Notes: Lead Paint Bulks Results in weights By AA. —

Sampled By: Robert Rickard

Known hazards associated with samples: Lead paint

Relinquished By	Date/Time	Received By	Date/Time	pH
		1/15/15	16:00	
Relinquished By	Date/Time	Received By	Date/Time	Rush Yes — 5 days 50% surcharge; 2 days 100% surcharge
Relinquished By	Date/Time	Received By	Date/Time	Field Filtered Y / N

The recommended temperature of the internal container is 2-6°C. Do you authorize analysis if the temp is out of range?

N/A

Yes No

Chain of Custody must be filled out completely. This includes signature, sample description, analysis requested, date and time sampled.

If not completed, samples will be rejected.

Rev. 8/04 Form #NEL 100

If a sample is hazardous or radioactive, the sample will be returned to the client at the client's expense.
Standard turn-around-time is 10 business days - depending on season.

NORTHEAST LABORATORY SERVICES
SAMPLE RECEIPT CONDITION REPORT

Standard Operating Procedure for Sample Receipt and Log-In of Analytical San

NEL Log-In SOP #.

Client: Atatement Professionals Date/Time Received: 1/15/15 16:00 Intials: [illegible]

Project: _____ Rush? Yes No TAT

NEL Sample Numbers: AS00094.1 — 107.1

Delivered by: Portland Tracking Number: N/A

Cooler ____ of ____

	Yes	No	NA	Comment
1. Are custody seals present?		✓		
2. Is the COC present in cooler?	✓			
3. Is the COC properly filled out?	✓			
4. Is a temp blank present?			✓	{ } Completed at NEL
5. Is the temperature of the cooler 4°C +/- 2°C?			✓	Temp: N/A { } NA Collected <2Hr ago
6. Are ice pacs/ice present in cooler?			✓	
7. Do sample labels match the COC?	✓			
8. Are samples in proper sample containers with proper preservation?*			✓	
9. Are samples within the analytical hold time?	✓			
10. Is there sufficient volume to perform tests?	✓			
11. Are samples in good condition?	✓			
12. Are aqueous VOA/GRO vials free of headspace?			✓	
13. If necessary, has the cooler been screened for radiological activity?			✓	

*See internal COC for preservation verification

Comments: _____

CONTROLLED

S:\SAMPLE ROOM\Sample Receipt Form 050310.doc

APPENDIX C

PLAZA SAFETY REQUIREMENTS

PLAZA SAFETY REQUIREMENTS
FALMOUTH SPUR BARRIER TOLL PLAZA
OPEN ROAD TOLLING CONVERSION
(MM FS2.8)

The following are the minimum Plaza Lane closure requirements for completing the work. The limits have been set to protect Turnpike patrons and Toll Attendants from potential harm during the construction. The Contractor shall utilize this information in bidding the work. Drums and constructions signs will be paid under their respective pay items. Movement of drums and construction signs will be paid under the Maintenance of Traffic pay item.

The Contractor shall furnish, erect, maintain and relocate twenty 10 inch by 14 inch (minimum dimensions) DANGER – Unauthorized Persons Keep Out, or DANGER – DO NOT ENTER signs, meeting OSHA specifications for size, color and legend, for installation on toll booths or drums, as directed by the Resident. The Contractor shall furnish and install red hazard safety tape between barrels and in cordoned off tunnel and lane areas to identify the hazard areas for Turnpike patrons and Toll Attendants. The purchase, erection, maintenance, and relocation of the hazard signs and hazard safety tape shall be incidental to the mobilization pay item. Providing, maintaining and relocating the specified plywood safety walkways at all locations shall also be incidental to the mobilization pay item.

Unless otherwise specified all labor, materials and equipment required to meet the requirements of Appendix C shall be incidental to the various pay items. Maintenance of Traffic signing shall be in place during plaza work at all times.

See Plan Sheet TC-06 Maintenance of Traffic for Employee Access for a detailed view of each phase. All pathways shall be clearly delineated from the building to the open booths. Rigid opaque screens shall be installed around concrete demolition, excavation and blasting areas for noise and dust control prior to the start of each work activity.

Phase 4 – The tunnel will be open to employees to access Lanes 7 and 8. A clear pathway shall be provided thru the tunnel and the stairways at all times. The Contractor shall provide positive mechanical ventilation to remove dust and fumes out of the tunnel and away from the plaza at all times work is ongoing or dust and fumes are present. Debris and materials shall be cleaned-up on a daily basis.

When blasting near the toll plazas a safety area shall be clearly designated for the MTA employees to go to during the blast. A clear path, not thru the work area, shall be provided to the safe areas.

APPENDIX D

DEFINED TERMS

DEFINED TERMS

- **AVI (Automatic Vehicle Identification)**: a system consisting of an antenna and reader installed in a toll lane for communication with a transponder located on a vehicle for automatic identification of the transponder as it passes through the lane.
- **Canopy Override Switch (COS)**: shall mean the switch that controls the signal that is located on the canopy on the entry side of each toll lane.
- **Sensor Loops**: a system for automatic vehicle detection, separation and classification.
- **COMM** - Communications
- **Components**: parts that compose a device or piece of equipment.
- **DVAS (Digital Video Audit System)** – A video camera and image storage system that captures traffic movements in the lane 24 hours a day.
- **EMT** - Electrical Metallic Tubing
- **Gradient Sensor** – Part of the Sensor Loop system - a gradient sensor is placed on each side of the Primary sensor.
- **Contractor**: the Contractor hired by the Authority through a solicitation process to complete the Project.
- **JB** - Junction Box
- **Lane Controller (LC)**: A computer system for each type of toll lane that controls the lane equipment.
- **Manual Lane Terminal (or MLT)**: A device consisting of an array of touch screen buttons and associated electronics for processing toll transactions in the attended tollbooths.
- **MTA -** Maine Turnpike Authority
- **NTS** -Not to Scale
- **Paypoint Sensor** – Part of the Sensor Loop system. Detects when the vehicle has reached the lane paypoint, in this case the tollbooth door centerline.
- **Primary Sensor** – Part of the Sensor Loop system. Located between two gradient sensors, a 6' x '6 square sensor that participates in vehicle classification.
- **Project:** shall mean the upgrade of the existing New Gloucester Barrier Toll Lane 8 to the toll collection system described in herein.
- **RMC** - Rigid Metallic Conduit
- **RP (Receipt Printer)** – Receipt printer that communicates with the payment system. Located in the booth.
- **Specifications**: shall mean the Technical Specification and instructions included in this document for the purpose of defining the installation procedures
- **SI (Systems Integrator) -** The systems integrator/contractor for the MTA toll system.
- **SS** - Stainless Steel
- **TCP (Traffic Control Pedestal)**: A pedestal to mount a traffic signal and screen with a message to patrons.

- **UPS** - Uninterrupted Power Supply
- **VES (Violation Enforcement System)** – Cameras that automatically capture digital photographic images of vehicles and their license plates.

APPENDIX E

PLAZA WORK CHECKLIST

PLAZA – WORK CHECKLIST

DATE SUBMITTED:		**DATE APPROVED:**				
REVISION #1:		**DATE APPROVED:**				
REVISION #2:		**DATE APPROVED:**				
PROPOSED EQUIPMENT	**PROPOSED LOCATION**	**POWER SOURCE**		**EXTRA WORK (Y/N)**	**APPRVL DATE**	**APPRVL BY**
		PANEL	**CIRCUIT**			
(2) AVI READERS						
(26) SENSOR LOOPS						
(2) DVAS CAMERA MOUNTS						
(2) ORT LANE CONTROLLER CABINETS						
(12) VCARS CAMERAS						
(10) AVI ANTENNAS						
(2) LIGHTNING SUPPRESSION SYSTEMS						
(2) SPACE FRAME LIGHTING SYSTEMS						
EXISTING TO REMAIN EQUIPMENT	**LOCATION**	**POWER SOURCE**		**EXTRA WORK (Y/N)**	**APPRVL DATE**	**APPRVL BY**
		PANEL	**CIRCUIT**			
(1) UPS IN TUNNEL						
EXISTING EQUIPMENT TO BE REMOVED	**LOCATION**	**POWER SOURCE**		**EXTRA WORK (Y/N)**	**APPRVL DATE**	**APPRVL BY**
		PANEL	**CIRCUIT**			
(4) ENTRY LOOPS						
(4) EXIT LOOPS						
(4) TREADLES						
(4) LIGHT CURTAIN						
(4) PATRON FARE DISPLAY						
(4) ISLAND TRAFFIC LIGHT						
(2) OVERHEAD SCANNER						
(4) CANOPY OVERRIDE SWITCH						
(6) RED/GREEN LIGHTS						
(2) RED LIGHTS						
(4) AVI ANTENNAS						
PORTION OF LIGHTNING SUPPRESSION SYSTEM						
PORTION OF CANOPY LIGHTING						
EXPLANATION OF ALL EXTRA WORK (USE ADDITIONAL SHEET IF REQUIRED)						

APPENDIX F

PRODUCT DATA SHEETS

Costar CHG3000S Series

Weatherproof Environmental Enclosure

The CHG3000S Series environmental enclosures house 1/3-inch or 1/2-inch format CCD cameras. Side openings allow easy access to the removable camera sled. The weatherproof CHG3000S is designed for indoor and outdoor use and has a body length of 12.5 inches. These housings work with fixed focal length or small zoom lenses. Also available is a 24V heater/blower kit.

Product Features

- For 1/3-inch format CCD cameras
- All aluminum construction
- Side opening for easy access
- Designed for indoor/outdoor applications; for use with fixed mount or pan/tilt
- Dustproof, IP66 weatherproof rated

Costar VIDEO SYSTEMS, LLC
2720 Commodore Drive, Suite 150 • Carrollton, TX 75007 www.costarvideo.com
Tel: 972-446-8844 • Fax: 972-446-8866 • 1-888-694-STAR (7827)

CHG3000S Series Specifications

Models

CHG3000S	Enclosure, environmental, 12.5-inch (31.75 cm) lower body length
CHG3000SHB	Enclosure, environmental, 12.5-inch (31.75 cm) lower body length. 24V thermostat controlled heater and blower

General

Maximum Camera and Lens Size	Accepts camera and lens combinations (including BNC connector) up to:
CHG3000S	11.5″L x 3.5″ W x 2.5″ H (29.21 cm x 8.89 cm x 6.35 cm)
CHG3000SHB	11.5″ L x 3.5″ W x 2.5″ H (29.21 cm x 8.89 cm x 6.35 cm)
Window Size	.11-inch (3.0 mm) thick tempered glass 2.42″ H x 2.65″ W (6.15 cm x 6.75 cm)
Construction	Die-cast, extruded, and sheet aluminum
Finish	Light-gray polyester power coat
Camera Mounting	Removable camera sled with adjustable height
Housing Mounting	Two (2) 1/4-20 tapped holes
Cable Entry	Two .35-inch (9.0 mm) glands on rear of housing
Rear Locking	Located at rear of housing; available for security lock
Environment	Indoor/outdoor: -10˚F to 120˚F (-23.33˚C to 48.89˚C)

Weight	Unit	Shipping
CHG3000S	2.70lb (1.23kg)	3.03lb (1.38kg)
CHG3000SHB	3.67lb (1.67kg)	4.18lb (1.90 kg)

Electrical

Input Voltage	24VAC, 50/60Hz lower body length

Power Consumption

Heater	Heater activates ON at 42-58˚F (6-14˚C) and OFF at 72-88˚F (22-31˚C), 20W, 0.83 Amp
Blower	Blower activates ON at 77-93˚F (25-34˚C) and OFF at 62-78˚F (17-26˚C), 2W, 0.08 Amp

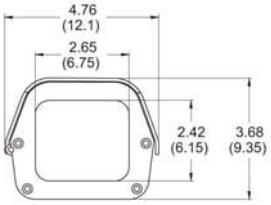

Optional Accessories

CHG3000-02	Heater kit, 24V, 20W, 0.83 Amp
CHG3000-03	Blower kit, 24V, 2W. 0.8 Amp

Note: Heater and Blower assemblies require O/I PCB BOARD assembly for connection.

Recommended Mounts

Wall	
CHG2700	Light duty wall mount. Max. load 20 lb (9.06kg)
Ceiling/Pedestal	
CHG2720	Medium duty celing "J" mount. Max. load 20 lb (9.06kg)

Design and specifications subject to change without notice.
Conversion: 1″ = 25.4mm
Measurement conversions are approximate.

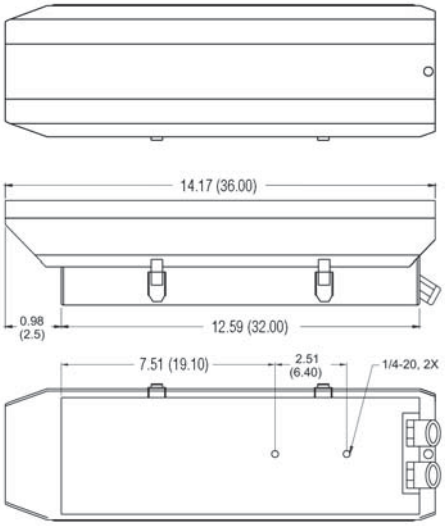

Unit: inch(cm)

Form CHG3000S-8/06

Costar VIDEO SYSTEMS, LLC
2720 Commodore Drive, Suite 150 • Carrollton, TX 75007 www.costarvideo.com
Tel: 972-446-8844 • 46-8866 • 1-888-694-STAR (7827)

EM1109/EM2000/EM2200 Mount

PIPE/POLE MOUNT, MEDIUM DUTY, ENCLOSURE

Product Features

- Low Cost
- Manually Adjustable Swivel Head
- Cable Feedthrough Hole
- Supports up to 40 lb (18.14 kg)
- Mounts on Vertical or Horizontal Pipe/Pole; Mounting Straps Included
- Compatible with Most Pelco Enclosures with a 2-Inch (5.08 cm) Mounting Pole Pattern

EM2200

The **EM1109/EM2000/EM2200** are medium duty enclosure mounts designed for applications where mounting on a pipe or pole is necessary. These mounts can be used with Pelco enclosures having a 2-inch (5.08 cm) mounting hole pattern and are capable of supporting up to 40 lb (18.14 kg). All three mounts feature a manually adjustable swivel head and a cable feedthrough hole to conceal wiring. Multiple mounting holes on the tilt table provide maximum 360-degree horizontal positioning of the enclosure.

The **EM1109** is a pedestal mount for use on a horizontal or vertical pipe or pole. The **EM2000** is a J-type mount for use on a vertical pipe or pole, and the **EM2200** is a "hook" type mount for use on a horizontal pipe or pole. The **EM1109/EM2000/EM2200** must be mounted on pipes or poles having a 3-inch (7.62 cm) to 8-inch (20.32 cm) diameter. Mounts are secured to the pipe or pole with stainless steel mounting straps. Two 1/4-20 mounting bolts required to secure the enclosure to the mount are also supplied.

The **EM1109/EM2000/EM2200** are constructed of aluminum and have a white epoxy powder coat finish.

EM2000

EM1109

TECHNICAL SPECIFICATIONS

MODELS

EM1109	Medium duty pedestal mount for horizontal or vertical pipe or pole applications. Manually adjustable swivel head and cable feedthrough hole.
EM2000	Medium duty 90 degree J-mount for vertical pipe or pole applications. Manually adjustable swivel head and cable feedthrough hole.
EM2200	Medium duty "hook" mount for horizontal pipe or pole applications. Manually adjustable swivel head and cable feedthrough hole.

MECHANICAL

Pan Adjustment	Unlimited 360°
Tilt Adjustment	±75°
Locking Method	3/8-16 hex head bolts (on manually adjustable swivel head)

GENERAL

Suggested Mounting Method	Slots provided for mounting straps; 3 stainless steel straps supplied. Straps fit 3-inch (7.62 cm) to 8-inch (20.32 cm) diameter pole.
Enclosure Mounting	2, 1/4-20 mounting bolts (supplied)
Maximum Load	40 lb (18.14 kg)
Construction	Aluminum
Finish	White epoxy polyester powder coat
Environment	Indoor/outdoor
Unit Weight	
EM1109	1.88 lb (0.85 kg)
EM2000	3.05 lb (1.38 kg)
EM2200	3.51 lb (1.59 kg)
Shipping Weight	
EM1109	3 lb (1.36 kg)
EM2000	8 lb (3.60 kg)
EM2200	9 lb (4.10 kg)

RECOMMENDED ENCLOSURES

Pelco enclosures having a 2-inch (5.08 cm) mounting hole pattern can be used with these mounts. Be sure the enclosure/camera/lens combination you select does not exceed 40 lb (18 kg) and is suitable for the type of mount you have selected. The following list indicates the most applicable enclosures.

EH3010/EH3014 Series
EH4010 EH4014 Series
EH3508 Series, Environmental
EH3512/EH3515 Series, Environmental
EH4700 Series, Environmental
EH4700DB Series, Environmental
E700 Series, Dust-Tight
EHX4E, Explosion-Proof
EH8100 Series, Pressurized

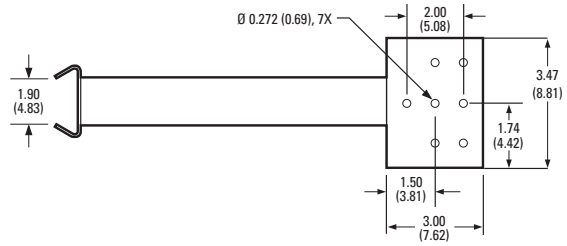

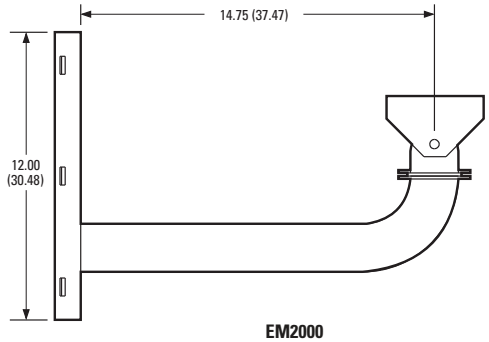

EM2000

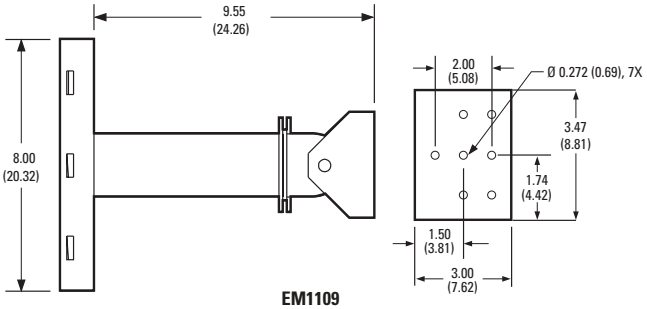

EM1109

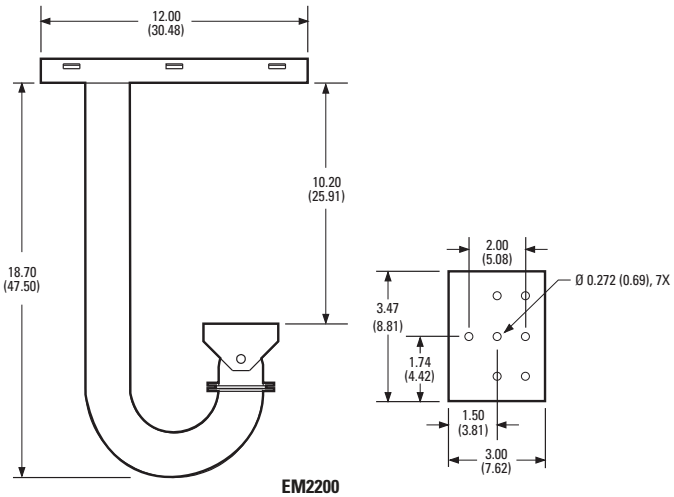

EM2200

NOTE: VALUES IN PARENTHESES ARE CENTIMETERS; ALL OTHERS ARE INCHES.

Pelco, Inc. Worldwide Headquarters:
3500 Pelco Way, Clovis, California 93612-5699 USA
USA & Canada Tel: (800) 289-9100 • FAX: (800) 289-9150
International Tel: +1 (559) 292-1981 • FAX: +1 (559) 348-1120
www.pelco.com

Pelco and the Pelco logo are registered trademarks of Pelco, Inc.
Product specifications and availability subject to change without notice.
©Copyright 2008, Pelco, Inc. All rights reserved.

LOCTITE®

Hysol® E-40FL™

December 200

PRODUCT DESCRIPTION

Hysol® E-40FL™ provides the following product characteristics:

Technology	Epoxy
Chemical Type (Resin)	Epoxy
Chemical Type (Hardener)	Polyamide
Appearance (Resin)	Off-white to beige liquid[LMS]
Appearance (Hardener)	Dark gray liquid[LMS]
Appearance (Mixed)	Gray, opaque liquid[LMS]
Components	Two component - requires mixing
Viscosity	Medium
Mix Ratio, by volume - Resin : Hardener	1 : 1
Mix Ratio, by weight - Resin : Hardener	100 : 85
Cure	Room temperature cure after mixing
Application	Bonding

Hysol® E-40FL™ is a toughened, medium viscosity, industrial grade epoxy adhesive with a medium working life. Once mixed, the two component epoxy cures at room temperature to form a flexible, gray bondline with excellent resistance to shock and impact. When fully cured, the epoxy is resistant to a wide range of chemicals and solvents, and acts as an excellent electrical insulator. Typical applications include bonding plastic, metal, glass, wood, ceramic, rubber, and masonry materials where flexibility is required. Suited for low-stress, high-impact bonding applications of dissimilar materials. Hysol® E-40FL™ can also be used for repairing strain gauges, sealing seams on fiberglass components, repairing printed circuit boards, bonding stainless steel inserts, and rubber hose to steel tubing.

TYPICAL PROPERTIES OF UNCURED MATERIAL

Resin:

Specific Gravity @ 25 °C	1.3
Flash Point - See MSDS	
Viscosity, Brookfield - RVT, 25 °C, mPa·s (cP):	
Spindle 7, speed 10 rpm	60,000 to 90,000[LMS]

Hardener:

Specific Gravity @ 25 °C	1.1
Flash Point - See MSDS	
Viscosity, Brookfield - RVT, 25 °C, mPa·s (cP):	
Spindle 7, speed 10 rpm	50,000 to 85,000[LMS]

Mixed:

Specific Gravity @ 25 °C	1.2
Working life, minutes	40
Tack Free Time minutes	130

TYPICAL CURING PERFORMANCE

Cure Speed vs. Time

The graph below shows shear strength developed with time on abraded, acid etched aluminum lapshears @ 25 °C with ar average bondline gap of 0.1 to 0.2 mm and tested according tc ISO 4587.

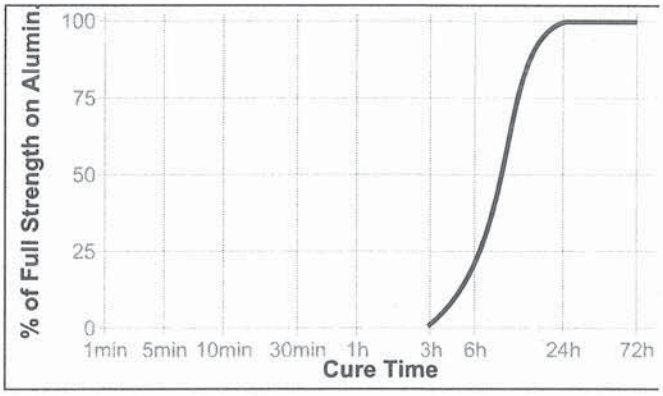

TYPICAL PROPERTIES OF CURED MATERIAL

Cured @ 25 °C

Physical Properties:

Glass Transition Temperature (Tg), °C		30
Shore Hardness, ISO 868, Durometer D		75
Elongation, ISO 527-2, %		22
Tensile Strength, ISO 527-2	N/mm²	16
	(psi)	(3,210)

Electrical Properties:

Dielectric Breakdown Strength, IEC 60243-1, kV/mm	16

TYPICAL PERFORMANCE OF CURED MATERIAL

Adhesive Properties

Cured for 3 days @ 22 °C

Lap Shear Strength, ISO 4587:

Steel (grit blasted)	N/mm²	4.4
	(psi)	(640)
Aluminum (acid etched & abraded), 0.1 to 0.2 mm gap	N/mm²	25.9
	(psi)	(3,750)
Aluminum (anodised)	N/mm²	6.3
	(psi)	(920)
Stainless steel	N/mm²	5.2
	(psi)	(760)
Polycarbonate	N/mm²	2.3
	(psi)	(330)
Nylon	N/mm²	2.6
	(psi)	(380)
Wood (Fir)	N/mm²	6.6
	(psi)	(960)

Block Shear Strength, ISO 13445:

PVC	N/mm²	2.8
	(psi)	(400)
ABS	N/mm²	3.1
	(psi)	(450)
Epoxy	N/mm²	11
	(psi)	(1,600)
Acrylic	N/mm²	3.2
	(psi)	(460)
Glass	N/mm²	12.9
	(psi)	(1,860)

Cured for 2 hours @ 65 °C
Lap Shear Strength, ISO 4587:

Aluminum (acid etched) 0.13 mm gap	N/mm²	≥6.9[LMS]
	(psi)	(≥1,000)

TYPICAL ENVIRONMENTAL RESISTANCE

Cured for 12 hours @ 65 °C followed by 4 hours @ 22 °C
Lap Shear Strength, ISO 4587:
Aluminum (acid etched & abraded), 0.1 to 0.2 mm gap

Hot Strength

Tested at temperature

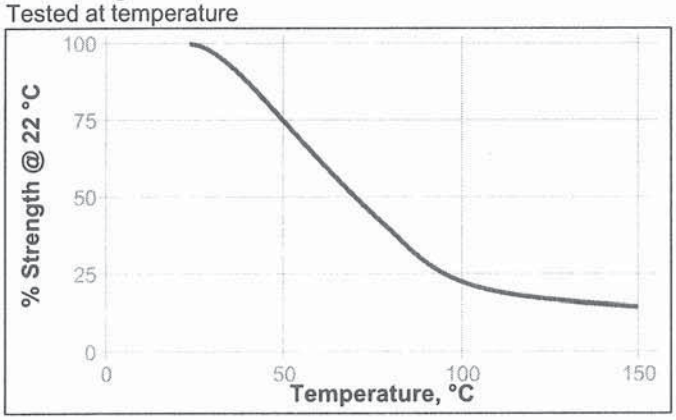

Cured for 5 days @ 22 °C
Lap Shear Strength, ISO 4587:
Steel

Heat Aging

Aged at temperature indicated and tested @ 22 °C

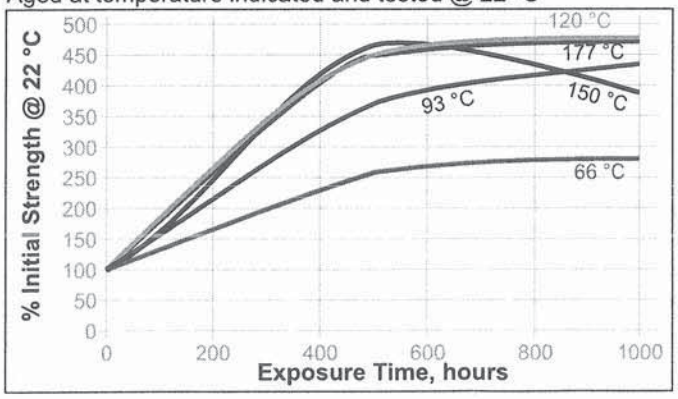

Chemical/Solvent Resistance

Aged under conditions indicated and tested @ 22 °C.

		% of initial strength	
Environment	**°C**	**500 h**	**1000 h**
Air	87	195	248
Motor oil (10W30)	87	269	215
Unleaded gasoline	87	61	73
Water/glycol 50/50	87	235	134
Salt fog	22	25	5
95% RH	38	60	64
Condensing Humidity	49	61	54
Water	22	50	0
Acetone	22	0	0
Isopropanol	22	68	61

GENERAL INFORMATION

This product is not recommended for use in pure oxygen and/or oxygen rich systems and should not be selected as a sealant for chlorine or other strong oxidizing materials.

For safe handling information on this product, consult the Material Safety Data Sheet (MSDS).

Directions for use

1. For high strength structural bonds, remove surface contaminants such as paint, oxide films, oils, dust, mold release agents and all other surface contaminants.
2. Use gloves to minimize skin contact. DO NOT use solvents for cleaning hands.
3. **Dual Cartridges:** To use simply insert the cartridge into the application gun and start the plunger into the cylinders using light pressure on the trigger. Next, remove the cartridge cap and expel a small amount of adhesive to be sure both sides are flowing evenly and freely. If automatic mixing of resin and hardener is desired, attach the mixing nozzle to the end of the cartridge and begin dispensing the adhesive. For hand mixing, expel the desired amount of the adhesive and mix thoroughly. Mix for approximately 15 seconds after uniform color is obtained.
   Bulk Containers: Mix thoroughly by weight or volume in the proportions specified in Product Description section. Mix vigorously, approximately 15 seconds after uniform color is obtained.
4. For maximum bond strength apply adhesive evenly to both surfaces to be joined.
5. Application to the substrates should be made within 40 minutes. Larger quantities and/or higher temperatures will reduce this working time.
6. Join the adhesive coated surfaces and allow to cure at 25 °C for 24 hours for high strength. Heat up to 93 °C, will speed curing.
7. Keep parts from moving during cure. Contact pressure is neccesary. Maximum shear strength is obtained with a 0.1 to 0.2 mm bond line.
8. Excessive uncured adhesive can be cleaned up with ketone type solvents.

Loctite Material Specification[LMS]
LMS dated July 19, 2001 (Resin) and LMS dated July 19, 2001 (Hardener). Test reports for each batch are available for the indicated properties. LMS test reports include selected QC test parameters considered appropriate to specifications for customer use. Additionally, comprehensive controls are in place to assure product quality and consistency. Special customer specification requirements may be coordinated through Henkel Loctite Quality.

Storage
Store product in the unopened container in a dry location. Storage information may be indicated on the product container labeling.
Optimal Storage: 8 °C to 21 °C. Storage below 8 °C or greater than 28 °C can adversely affect product properties. Material removed from containers may be contaminated during use. Do not return product to the original container. Henkel Corporation cannot assume responsibility for product which has been contaminated or stored under conditions other than those previously indicated. If additional information is required, please contact your local Technical Service Center or Customer Service Representative.

Conversions
(°C x 1.8) + 32 = °F
kV/mm x 25.4 = V/mil
mm / 25.4 = inches
µm / 25.4 = mil
N x 0.225 = lb
N/mm x 5.71 = lb/in
N/mm² x 145 = psi
MPa x 145 = psi
N·m x 8.851 = lb·in
N·m x 0.738 = lb·ft
N·mm x 0.142 = oz·in
mPa·s = cP

Note
The data contained herein are furnished for information only and are believed to be reliable. We cannot assume responsibility for the results obtained by others over whose methods we have no control. It is the user's responsibility to determine suitability for the user's purpose of any production methods mentioned herein and to adopt such precautions as may be advisable for the protection of property and of persons against any hazards that may be involved in the handling and use thereof. In light of the foregoing, **Henkel Corporation specifically disclaims all warranties expressed or implied, including warranties of merchantability or fitness for a particular purpose, arising from sale or use of Henkel Corporation's products. Henkel Corporation specifically disclaims any liability for consequential or incidental damages of any kind, including lost profits.** The discussion herein of various processes or compositions is not to be interpreted as representation that they are free from domination of patents owned by others or as a license under any Henkel Corporation patents that may cover such processes or compositions. We recommend that each prospective user test his proposed application before repetitive use, using this data as a guide. This product may be covered by one or more United States or foreign patents or patent applications.

Trademark usage
Except as otherwise noted, all trademarks in this documen are trademarks of Henkel Corporation in the U.S. an elsewhere. ® denotes a trademark registered in the U.S Patent and Trademark Office.

Reference 0.0

Material Safety Data Sheet

Henkel

Revision Number: 002.1

Issue date: 01/26/2010

1. PRODUCT AND COMPANY IDENTIFICATION

Product name: UNITED TOLL EPX RESIN
Product type: Epoxy resin

IDH number: 744608
Item number: 40486
Region: United States

Company address:
Henkel Corporation
One Henkel Way
Rocky Hill, Connecticut 06067

Contact information:
Telephone: 860.571.5100
Emergency telephone: 860.571.5100
Internet: www.henkelna.com

2. HAZARDS IDENTIFICATION

EMERGENCY OVERVIEW

Physical state: Liquid
Color: Light
Odor: Faint, Epoxy

HMIS:
HEALTH: 2
FLAMMABILITY: 1
PHYSICAL HAZARD: 0
Personal Protection: See MSDS Section 8

WARNING: MAY CAUSE ALLERGIC SKIN REACTION.
MAY CAUSE EYE, SKIN AND RESPIRATORY TRACT IRRITATION.

Relevant routes of exposure: Skin, Inhalation, Eyes

Potential Health Effects

Inhalation: May cause respiratory tract irritation.
Skin contact: May cause allergic skin reaction. May cause skin irritation. Burning sensation. Itching. Redness. Swelling.
Eye contact: May cause irritation. Direct contact may cause temporary redness and discomfort.
Ingestion: Not a relevant route of exposure.

Existing conditions aggravated by exposure: Skin allergies. Skin disorders. Respiratory disorders.

This material is considered hazardous by the OSHA Hazard Communication Standard (29 CFR 1910.1200).

See Section 11 for additional toxicological information.

3. COMPOSITION / INFORMATION ON INGREDIENTS

Hazardous components	CAS NUMBER	%
Epichlorohydrin-4,4'-isopropylidene diphenol resin	25068-38-6	60 - 100
Kaolin	1332-58-7	10 - 30

4. FIRST AID MEASURES

Inhalation: Move to fresh air. If not breathing, give artificial respiration. If breathing is difficult, give oxygen. If symptoms develop and persist, get medical attention.

Skin contact: Immediately flush skin with plenty of water (using soap, if available). Remove contaminated clothing and footwear. If symptoms develop and persist, get medical attention. Wash clothing before reuse. Thoroughly clean shoes before reuse.

Eye contact: Immediately flush eyes with plenty of water for at least 15 minutes. Get medical attention.

Ingestion: DO NOT induce vomiting unless directed to do so by medical personnel. Never give anything by mouth to an unconscious person. Get medical attention.

5. FIRE FIGHTING MEASURES

Flash point: > 93 °C (> 199.4 °F) Setaflash Closed Cup

Autoignition temperature: Not available

Flammable/Explosive limits - lower: Not available

Flammable/Explosive limits - upper: Not available

Extinguishing media: Water spray (fog), foam, dry chemical or carbon dioxide.

Special firefighting procedures: Wear self-contained breathing apparatus and full protective clothing, such as turn-out gear.

Unusual fire or explosion hazards: None expected.

Hazardous combustion products: Acids. Aldehydes. Irritating organic vapours. Oxides of carbon.

6. ACCIDENTAL RELEASE MEASURES

Use personal protection recommended in Section 8, isolate the hazard area and deny entry to unnecessary and unprotected personnel.

Environmental precautions: Do not allow product to enter sewer or waterways.

Clean-up methods: Soak up with inert absorbent material (e.g. sand, silica gel, acid binder, universal binder, sawdust). Scrape up spilled material and place in a closed container for disposal.

7. HANDLING AND STORAGE

Handling: Use only with adequate ventilation. Keep container closed. Prevent contact with eyes, skin and clothing. Do not breathe vapor and mist. Wash thoroughly after handling.

Storage: Keep in a cool, well ventilated area away from heat, sparks and open flame. Keep container tightly closed until ready for use.

For information on product shelf life contact Henkel Customer Service at (800) 243-4874.

8. EXPOSURE CONTROLS / PERSONAL PROTECTION

Employers should complete an assessment of all workplaces to determine the need for, and selection of, proper exposure controls and protective equipment for each task performed.

Hazardous components	ACGIH TLV	OSHA PEL	AIHA WEEL	OTHER
Epichlorohydrin-4,4'-isopropylidene diphenol resin	None	None	None	None
Kaolin	2 mg/m3 TWA Respirable fraction.	5 mg/m3 TWA Respirable fraction. 15 mg/m3 TWA Total dust.	None	None

Engineering controls: Use local ventilation if general ventilation is insufficient to maintain vapor concentration below established exposure limits.

Respiratory protection:	Use NIOSH approved respirator if there is potential to exceed exposure limit(s).
Eye/face protection:	Safety goggles or safety glasses with side shields.
Skin protection:	Use impermeable gloves and protective clothing as necessary to prevent skin contact. Butyl rubber gloves.

9. PHYSICAL AND CHEMICAL PROPERTIES

Physical state:	Liquid
Color:	Light
Odor:	Faint, Epoxy
Odor threshold:	Not available
pH:	Not available
Vapor pressure:	Not available
Boiling point/range:	> 250 °C (> 482°F)
Melting point/ range:	Not available
Vapor density:	Not available
Flash point:	> 93 °C (> 199.4 °F) Setaflash Closed Cup
Flammable/Explosive limits - lower:	Not available
Flammable/Explosive limits - upper:	Not available
Autoignition temperature:	Not available
Evaporation rate:	Not available
Solubility in water:	Negligible
Partition coefficient (n-octanol/water):	Not available
VOC content:	< 1 %; < 10 g/l Estimated

10. STABILITY AND REACTIVITY

Stability:	Stable under normal conditions of storage and use.
Hazardous reactions:	Will not occur.
Hazardous decomposition products:	Oxides of carbon. Hydrocarbons. Phenolics.
Incompatible materials:	Strong oxidizing agents. Amines. Acids. Bases.
Conditions to avoid:	Avoid temperatures above 149°C (300°F).

11. TOXICOLOGICAL INFORMATION

Hazardous components	NTP Carcinogen	IARC Carcinogen	OSHA Carcinogen (Specifically Regulated)
Epichlorohydrin-4,4'-isopropylidene diphenol resin	No	No	No
Kaolin	No	No	No

Hazardous components	Health Effects/Target Organs
Epichlorohydrin-4,4'-isopropylidene diphenol resin	Allergen, Irritant
Kaolin	Nuisance dust

12. ECOLOGICAL INFORMATION

Ecological information:	Not available

13. DISPOSAL CONSIDERATIONS

Information provided is for unused product only.

Recommended method of disposal:	Follow all local, state, federal and provincial regulations for disposal.
Hazardous waste number:	Not a RCRA hazardous waste.

14. TRANSPORT INFORMATION

The shipping classifications in this sections are for non-bulk packaging only (unless otherwise specified). Shipping classification may be different for bulk packaging.

U.S. Department of Transportation Ground (49 CFR)

Proper shipping name:	Not regulated
Hazard class or division:	None
Identification number:	None
Packing group:	None

International Air Transportation (ICAO/IATA)

Proper shipping name:	Environmentally hazardous substance, liquid, n.o.s. (Bisphenol-A Epichlorhydrine resin)
Hazard class or division:	9
Identification number:	UN 3082
Packing group:	III

Water Transportation (IMO/IMDG)

Proper shipping name:	ENVIRONMENTALLY HAZARDOUS SUBSTANCE, LIQUID, N.O.S. (Bisphenol-A Epichlorhydrine resin)
Hazard class or division:	9
Identification number:	UN 3082
Packing group:	III
Marine pollutant:	Bisphenol-A Epichlorhydrine resin

15. REGULATORY INFORMATION

United States Regulatory Information

TSCA 8 (b) Inventory Status:	All components are listed or are exempt from listing on the Toxic Substances Control Act Inventory.
TSCA 12(b) Export Notification:	None above reporting de minimus
CERCLA/SARA Section 302 EHS:	None above reporting de minimus
CERCLA/SARA Section 311/312:	Immediate Health
CERCLA/SARA 313:	None above reporting de minimus
California Proposition 65:	This product contains a chemical known in the State of California to cause cancer.

Canada Regulatory Information

CEPA DSL/NDSL Status:	All components are listed on or are exempt from listing on the Canadian Domestic Substances List.
WHMIS hazard class:	D.2.B

16. OTHER INFORMATION

This material safety data sheet contains changes from the previous version in sections: New Material Safety Data Sheet format., This Material Safety Data Sheet contains changes from the previous version in Section(s): 2, 5, 10, 14, 15

Prepared by: Rena Petrides, Regulatory Affairs Specialist

DISCLAIMER: The data contained herein are furnished for information only and are believed to be reliable. However, Henkel Corporation does not assume responsibility for any results obtained by persons over whose methods Henkel Corporation has no control. It is the user's responsibility to determine the suitability of Henkel's products or any production methods mentioned herein for a particular purpose, and to adopt such precautions as may be advisable for the protection of property and persons against any hazards that may be involved in the handling and use of any of Henkel Corporation's products. In light of the foregoing, Henkel Corporation specifically disclaims all warranties, express or implied, including warranties of merchantability and fitness for a particular purpose, arising from sale or use of Henkel Corporation's products. Henkel Corporation further disclaims any liability for consequential or incidental damages of any kind, including lost profits.

Material Safety Data Sheet

Henkel

Revision Number: 002.1

Issue date: 05/07/2009

1. PRODUCT AND COMPANY IDENTIFICATION

Product name: UNITED TOLL EPX HARD 18.9L
Product type: Epoxy Hardener

Company address:

IDH number: 744609
Item number: 40487
Region: United States
Contact information:
Not available
Emergency telephone: 860.571.5100

2. HAZARDS IDENTIFICATION

EMERGENCY OVERVIEW

Physical state: Liquid
Color: Gray
Odor: Mild

HMIS:

HEALTH:	*2
FLAMMABILITY:	1
PHYSICAL HAZARD:	0
Personal Protection:	See MSDS Section 8

WARNING: CAUSES EYE AND SKIN IRRITATION.
MAY CAUSE RESPIRATORY TRACT IRRITATION.

Relevant routes of exposure: Skin, Inhalation, Eyes

Potential Health Effects

Inhalation: May cause respiratory tract irritation.
Skin contact: Causes skin irritation.
Eye contact: Causes eye irritation.
Ingestion: Not a relevant route of exposure.

Existing conditions aggravated by exposure: Eye, skin, and respiratory disorders. Skin allergies.

This material is considered hazardous by the OSHA Hazard Communication Standard (29 CFR 1910.1200).

See Section 11 for additional toxicological information.

3. COMPOSITION / INFORMATION ON INGREDIENTS

Hazardous components	CAS NUMBER	%
Al-silicate Kaolin	1332-58-7	10 - 30
Salicylic acid	69-72-7	1 - 5
Glycerol	56-81-5	1 - 5
2,4,6-Tris(dimethylaminomethyl)phenol	90-72-2	1 - 5
Silica, amorphous, fumed, crystal-free	112945-52-5	1 - 5

4. FIRST AID MEASURES

Inhalation: Move to fresh air. If not breathing, give artificial respiration. If breathing is difficult, give oxygen. Get medical attention.

Skin contact: Immediately flush skin with plenty of water (using soap, if available). Remove contaminated clothing and footwear. Thoroughly clean shoes before reuse. Get medical attention.

Eye contact:	Immediately flush eyes with plenty of water for at least 15 minutes. Get medical attention.
Ingestion:	DO NOT induce vomiting unless directed to do so by medical personnel. Never give anything by mouth to an unconscious person. Get medical attention.

5. FIRE FIGHTING MEASURES

Flash point:	> 93 °C (> 199.4 °F) Setaflash Closed Cup
Autoignition temperature:	Not available
Flammable/Explosive limits - lower:	Not available
Flammable/Explosive limits - upper:	Not available
Extinguishing media:	Foam, dry chemical or carbon dioxide.
Special firefighting procedures:	Wear self-contained breathing apparatus and full protective clothing, such as turn-out gear.
Unusual fire or explosion hazards:	Personnel in vicinity and downwind should be evacuated.
Hazardous combustion products:	Ammonia. Nitric acid. Oxides of carbon. Oxides of nitrogen. Irritating organic fragments.

6. ACCIDENTAL RELEASE MEASURES

Use personal protection recommended in Section 8, isolate the hazard area and deny entry to unnecessary and unprotected personnel.

Environmental precautions:	Do not allow product to enter sewer or waterways.
Clean-up methods:	Immediately contact emergency personnel. Ensure adequate ventilation. Soak up with inert absorbent material (e.g. sand, silica gel, acid binder, universal binder, sawdust). Scrape up spilled material and place in a closed container for disposal.

7. HANDLING AND STORAGE

Handling:	Prevent contact with eyes, skin and clothing. Do not breathe vapor and mist. Wash thoroughly after handling. Keep container closed. Use only with adequate ventilation.
Storage:	Keep in a cool, well ventilated area away from heat, sparks and open flame. Keep container tightly closed until ready for use. Do not store near acids. Do not store in reactive metal containers.

For information on product shelf life contact Henkel Customer Service at (800) 243-4874.

8. EXPOSURE CONTROLS / PERSONAL PROTECTION

Employers should complete an assessment of all workplaces to determine the need for, and selection of, proper exposure controls and protective equipment for each task performed.

Hazardous components	ACGIH TLV	OSHA PEL	AIHA WEEL	OTHER
Al-silicate Kaolin	2 mg/m3 TWA Respirable fraction.	5 mg/m3 TWA Respirable fraction. 15 mg/m3 TWA Total dust.	None	None
Salicylic acid	None	None	None	None
Glycerol	10 mg/m3 TWA Mist.	15 mg/m3 TWA Total dust. 5 mg/m3 TWA Respirable fraction.	None	None
2,4,6-Tris(dimethylaminomethyl)phenol	None	None	None	None
Silica, amorphous, fumed, crystal-free	10 mg/m3 TWA Inhalable dust. 3 mg/m3 TWA Respirable fraction.	20 MPPCF TWA 0.8 mg/m3 TWA	None	None

Engineering controls: Local exhaust ventilation is recommended when general ventilation is not sufficient to control airborne contamination.

Respiratory protection: Use NIOSH approved respirator if there is potential to exceed exposure limit(s).

Eye/face protection: Safety goggles or safety glasses with side shields.

Skin protection: Chemical resistant, impermeable gloves. Butyl rubber gloves.

9. PHYSICAL AND CHEMICAL PROPERTIES

Physical state: Liquid
Color: Gray
Odor: Mild
Odor threshold: Not available
pH: Not available
Vapor pressure: Not available
Boiling point/range: Not available
Melting point/ range: Not available
Vapor density: Not available
Flash point: > 93 °C (> 199.4 °F) Setaflash Closed Cup
Flammable/Explosive limits - lower: Not available
Flammable/Explosive limits - upper: Not available
Autoignition temperature: Not available
Evaporation rate: Not available
Solubility in water: Partially soluble
Partition coefficient (n-octanol/water): Not available
VOC content: < 1 %; < 10 g/l

10. STABILITY AND REACTIVITY

Stability: Stable

Hazardous reactions: Will not occur.

Hazardous decomposition products: Ammonia. Oxides of carbon. Oxides of nitrogen. Nitric acid. Irritating organic fragments.

Incompatible materials: Strong oxidizing agents. Organic acids. Mineral acids. Bases. Halogenated compounds. This product slowly corrodes copper, aluminum, zinc and galvanized surfaces.

Conditions to avoid: Direct sources of heat. Store away from incompatible materials.

11. TOXICOLOGICAL INFORMATION

Hazardous components	NTP Carcinogen	IARC Carcinogen	OSHA Carcinogen (Specifically Regulated)
Al-silicate Kaolin	No	No	No
Salicylic acid	No	No	No
Glycerol	No	No	No
2,4,6-Tris(dimethylaminomethyl)phenol	No	No	No
Silica, amorphous, fumed, crystal-free	No	No	No

Hazardous components	Health Effects/Target Organs
Al-silicate Kaolin	Nuisance dust
Salicylic acid	Irritant
Glycerol	Blood, Irritant, Kidney, Nuisance dust
2,4,6-Tris(dimethylaminomethyl)phenol	Irritant, Allergen
Silica, amorphous, fumed, crystal-free	Nuisance dust

12. ECOLOGICAL INFORMATION

Ecological information: Not available

13. DISPOSAL CONSIDERATIONS

Information provided is for unused product only.

Recommended method of disposal: Follow all local, state, federal and provincial regulations for disposal.

Hazardous waste number: Not a RCRA hazardous waste.

14. TRANSPORT INFORMATION

The shipping classifications in this sections are for non-bulk packaging only (unless otherwise specified). Shipping classification may be different for bulk packaging.

U.S. Department of Transportation Ground (49 CFR)

Proper shipping name: Not regulated
Hazard class or division: None
Identification number: None
Packing group: None

International Air Transportation (ICAO/IATA)

Proper shipping name: Not regulated
Hazard class or division: None
Identification number: None
Packing group: None

Water Transportation (IMO/IMDG)

Proper shipping name: Not regulated
Hazard class or division: None
Identification number: None
Packing group: None

15. REGULATORY INFORMATION

United States Regulatory Information

TSCA 8 (b) Inventory Status: All components are listed or are exempt from listing on the Toxic Substances Control Act Inventory.
TSCA 12(b) Export Notification: None above reporting de minimus

CERCLA/SARA Section 302 EHS: None above reporting de minimus
CERCLA/SARA Section 311/312: Immediate Health, Delayed Health

CERCLA/SARA 313:	None above reporting de minimus
California Proposition 65:	This product contains a chemical known in the State of California to cause cancer. This product contains a chemical known to the State of California to cause birth defects or other reproductive harm.

Canada Regulatory Information

CEPA DSL/NDSL Status:	All components are listed on or are exempt from listing on the Canadian Domestic Substances List.
WHMIS hazard class:	D.2.A, D.2.B

16. OTHER INFORMATION

This material safety data sheet contains changes from the previous version in sections: New Material Safety Data Sheet format.

Prepared by: Gary Pierson, Sr. Regulatory Affairs Specialist

DISCLAIMER: The data contained herein are furnished for information only and are believed to be reliable. However, Henkel Corporation does not assume responsibility for any results obtained by persons over whose methods Henkel Corporation has no control. It is the user's responsibility to determine the suitability of Henkel's products or any production methods mentioned herein for a particular purpose, and to adopt such precautions as may be advisable for the protection of property and persons against any hazards that may be involved in the handling and use of any of Henkel Corporation's products. In light of the foregoing, Henkel Corporation specifically disclaims all warranties, express or implied, including warranties of merchantability and fitness for a particular purpose, arising from sale or use of Henkel Corporation's products. Henkel Corporation further disclaims any liability for consequential or incidental damages of any kind, including lost profits.

PRODUCT DATA

W. R. MEADOWS SEALTIGHT

CSI Code: 03 15 00

NO. 323

AUGUST 2009
(Supersedes April 2004)

CERAMAR®

Flexible Foam Expansion Joint

DESCRIPTION

CERAMAR is a flexible foam expansion joint filler composed of a unique synthetic foam of isomeric polymers in a very small, closed-cell structure. Gray in color, CERAMAR is a lightweight, flexible, highly resilient material offering recovery qualities of over 99%. The compact, closed-cell structure will absorb almost no water.

USES

CERAMAR flexible foam expansion joint filler provides an excellent joint filler and back-up material for use in either horizontal or vertical applications where expansion and contraction movements must be accommodated. CERAMAR is compatible with all currently popular cold-applied sealants, caulks, and hot-pour joint sealing compounds. It is lightweight and easy to cut or form in the field without waste.

CERAMAR compresses easily for use with shrinkage-compensating concrete and it may be used to relieve stress and pressure in concrete pavements.

LEED INFORMATION

May help contribute to LEED credits:

- MR Credit 5.1: Regional Materials: 10% Extracted, Processed & Manufactured Regionally
- MR Credit 5.2: Regional Materials: 20% Extracted, Processed & Manufactured Regionally

FEATURES/BENEFITS

- May be sealed with hot- or cold-applied sealants.
- User friendly, lightweight, flexible foam ... forms or wraps around curved or circular surfaces.
- Cuts easily on the job with a razor knife ... no breakage or waste.
- Offers high resiliency and 99% recovery qualities ... low compression values ... non-extruding ... minimal water absorption.
- Resists ultraviolet degradation ... will not rot or deteriorate.
- Non-impregnated ... no staining or bleeding.
- Bonds easily with common cartridge adhesives.
- Non-gassing.

SPECIFICATIONS

- ASTM D 5249, Type 2
- ASTM D 1752, Sections 5.1 - 5.4, with compression requirement modified to 10 psi (7.03 g/mm^2) minimum and 25 psi (17.58 g/mm^2) maximum.
- ASTM D 7174-05

TECHNICAL DATA*

Compression, 50%	13 psi (9 g/mm^2) 89.6 kPa
Extrusion	0.1 inch (2.5 mm)
Recovery	99.21%
Water absorption, volume %	0.246

Test Method - ASTM D 545 [1/2" (12.7 mm) thick test specimen]
* All technical data is typical information, but may vary due to test methods, conditions, and operators.

CONTINUED ON REVERSE SIDE…

W. R. MEADOWS, INC.
P.O. Box 338 • HAMPSHIRE, IL 60140-0338
Phone: 847/214-2100 • Fax: 847/683-4544
1-800-342-5976
www.wrmeadows.com

HAMPSHIRE, IL / CARTERSVILLE, GA / YORK, PA
FORT WORTH, TX / BENICIA, CA / POMONA, CA
GOODYEAR, AZ / MILTON, ON / ST. ALBERT, AB

PACKAGING

Furnished in standard sheets 48" (1.22 m) wide, 10' (3.05m) long. Also available in precut widths of 2" - 46" (50.8 mm - 1.17 m).

Thickness	Approx. Wt./100 ft.^{2}	Approx. Wt./100 m^2	Pcs. per Bundle	Shipping Wt./Bundle
1/4" (6.4 mm)	3.13 lb.	15.29 kg	100	160 lb. (72.58 kg)
3/8" (9.5 mm)	4.70 lb.	22.93 kg	100	240 lb. (108.86 kg)
1/2" (12.7 mm)	6.25 lb.	30.52 kg	75	250 lb. (113.40 kg)
3/4" (19.1 mm)	9.40 lb.	45.90 kg	50	240 lb. (108.86 kg)
1" (25.4 mm)	12.50 lb.	61.03 kg	40	260 lb. (117.94 kg)

APPLICATION

For horizontal applications, position CERAMAR against the forms, at interrupting columns and objects or adjacent to abutting structures, before placing the concrete. Vertical applications may call for CERAMAR to be placed between panels, panel-to-column joints, or in block wall joints prior to sealing. CERAMAR may be used with all hot- and cold-applied sealants.

PRECAUTIONS

Due to its light weight, CERAMAR will float and must be held in place by compression or with a sealant.

HEALTH AND SAFETY

Refer to Material Safety Data Sheet (MSDS) for complete health and safety information.

For most current data sheet, further LEED information, and MSDS, visit www.wrmeadows.com.

LIMITED WARRANTY

"W. R. MEADOWS, INC. warrants at the time and place we make shipment, our material will be of good quality and will conform with our published specifications in force on the date of acceptance of the order." Read complete warranty. Copy furnished upon request.

Disclaimer

The information contained herein is included for illustrative purposes only, and to the best of our knowledge, is accurate and reliable. W. R. MEADOWS, INC. cannot however under any circumstances make any guarantee of results or assume any obligation or liability in connection with the use of this information. As W. R. MEADOWS, INC. has no control over the use to which others may put its product, it is recommended that the products be tested to determine if suitable for specific application and/or our information is valid in a particular circumstance. Responsibility remains with the architect or engineer, contractor and owner for the design, application and proper installation of each product. Specifier and user shall determine the suitability of products for specific application and assume all responsibilities in connection therewith.

© W. R. MEADOWS 2003

Direct-View LED Traffic Controller
DOT2424RG-175

PRODUCT NUMBER
5651

CABINET DIMENSIONS
24" H x 24" W x 5" D

ILLUMINATION SOURCE
Super bright, narrow viewing angle LEDs
Available in green, red, blue, amber, and white LEDs
Messages "blankout" when turned off, eliminating confusion
Long life, solid state lighting

ELECTRICAL
Integrated solid state power supply
Photocell for auto photodimming
Standard Voltage: 120 VAC, Optional Voltages: 9-36 V, 240 VAC, 277 VAC
Maximum amps per lighted message (at 120 V) shown in the table below
UL/CUL approved for wet locations

CONSTRUCTION
Faces: Single Faced Sign
Cabinet: (DOT): NEMA 4X Rated, 1/8" wall T5052 aluminum cabinet with continuously welded seams. Optional Visor
Door: Continuous hinge with a 1" x 1/4" silicone gasket and stainless steel tool free door latches
Face Material: Impact resistant, 1/4" thick smoke tinted polycarbonate

FINISH
Standard Cabinet Color: Black
Custom colors available upon request

MESSAGE	COLOR	HEIGHT	AMPS
X	30° Red Round	18.0"	0.17
Down Arrow	30° Green Round	18.0"	0.13

Trans-Tech
4999 Pittsburgh Ave.
Erie, PA 16509
Phone: (888) 811-7010
Fax: (814) 836-8401
Email: sales@transportation-tech.com
Website: www.transportation-tech.com

Proudly Made in the USA

Product View

NOTE: Sign image may not exactly represent the finished product. For illustration purposes only.

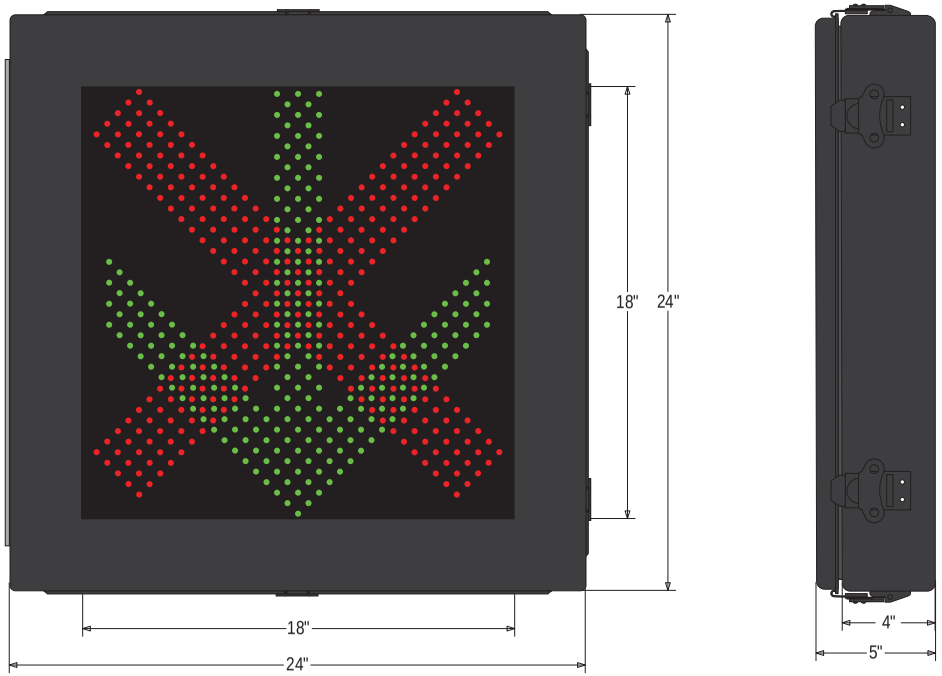

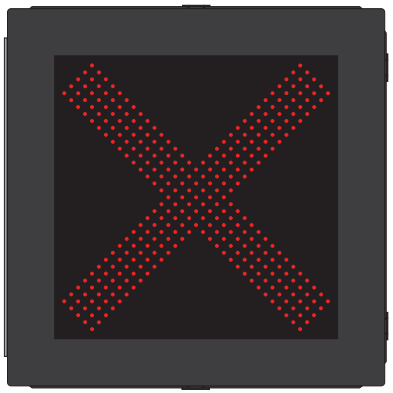

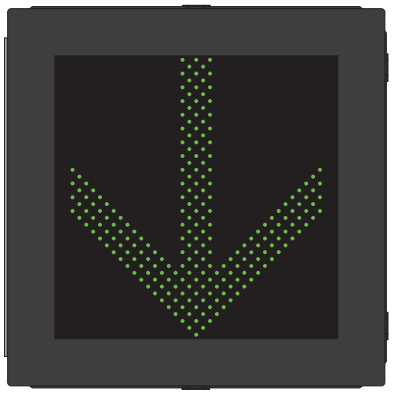

R-325
G-229

Copyright (C) 2013 Trans-Tech

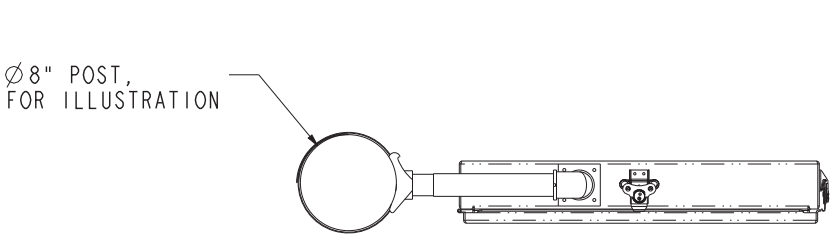

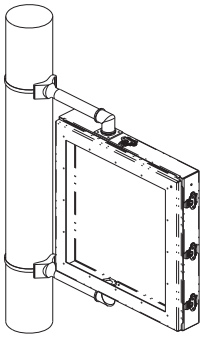

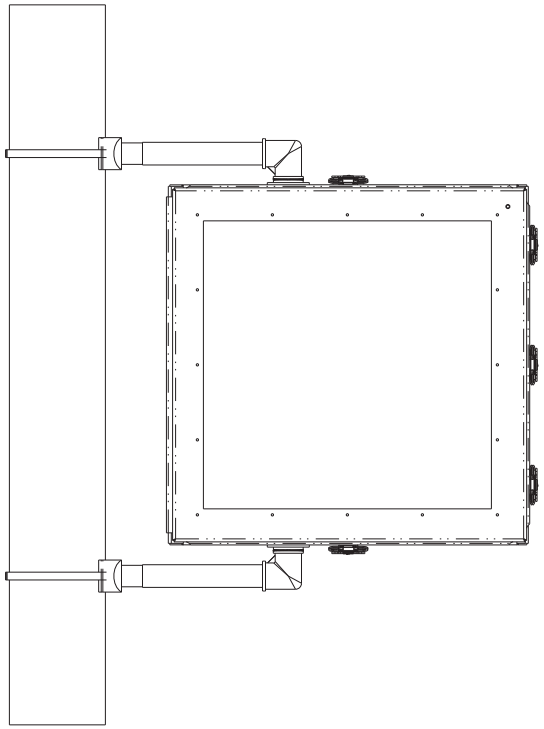

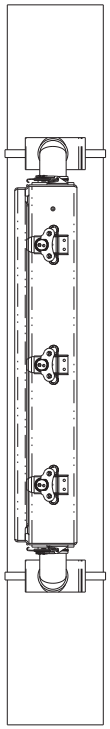

AP-F21

TYP TOL: ±1/16" ANGLES: ±2°		DATE: 10-MAR-11 SHEET 1 OF 3	3030 DOT, PELCO-MOUNTING	INV ID#:
		SignalTech	JDG	PROD ID#:
			4985 Pittsburgh Ave Erie, PA 16509	CUST ID#:

AP-F22

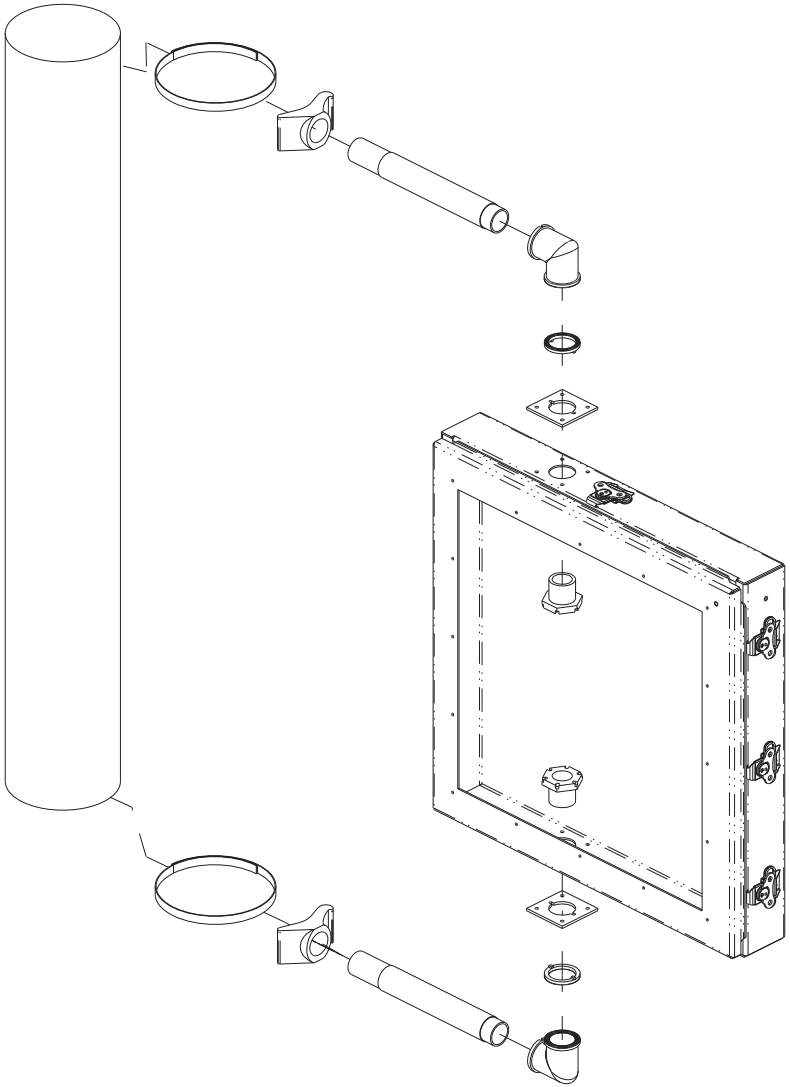

TYP TOL: ±1/16" ANGLES: ± 2°		DATE: 10-MAR-11 SHEET 2 OF 3	3030 DOT, PELCO-MOUNTING	INV ID#:
		SignalTech	JDG	PROD ID#:
			4985 Pittsburgh Ave Erie, PA 16509	CUST ID#:

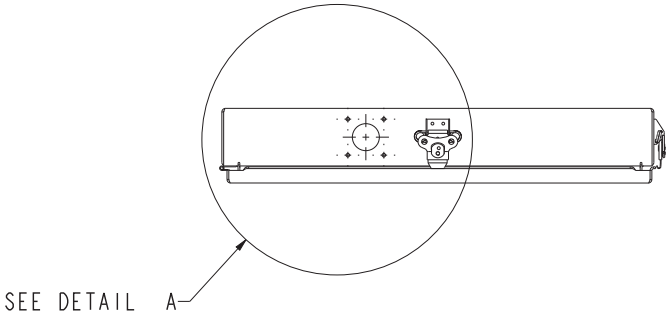

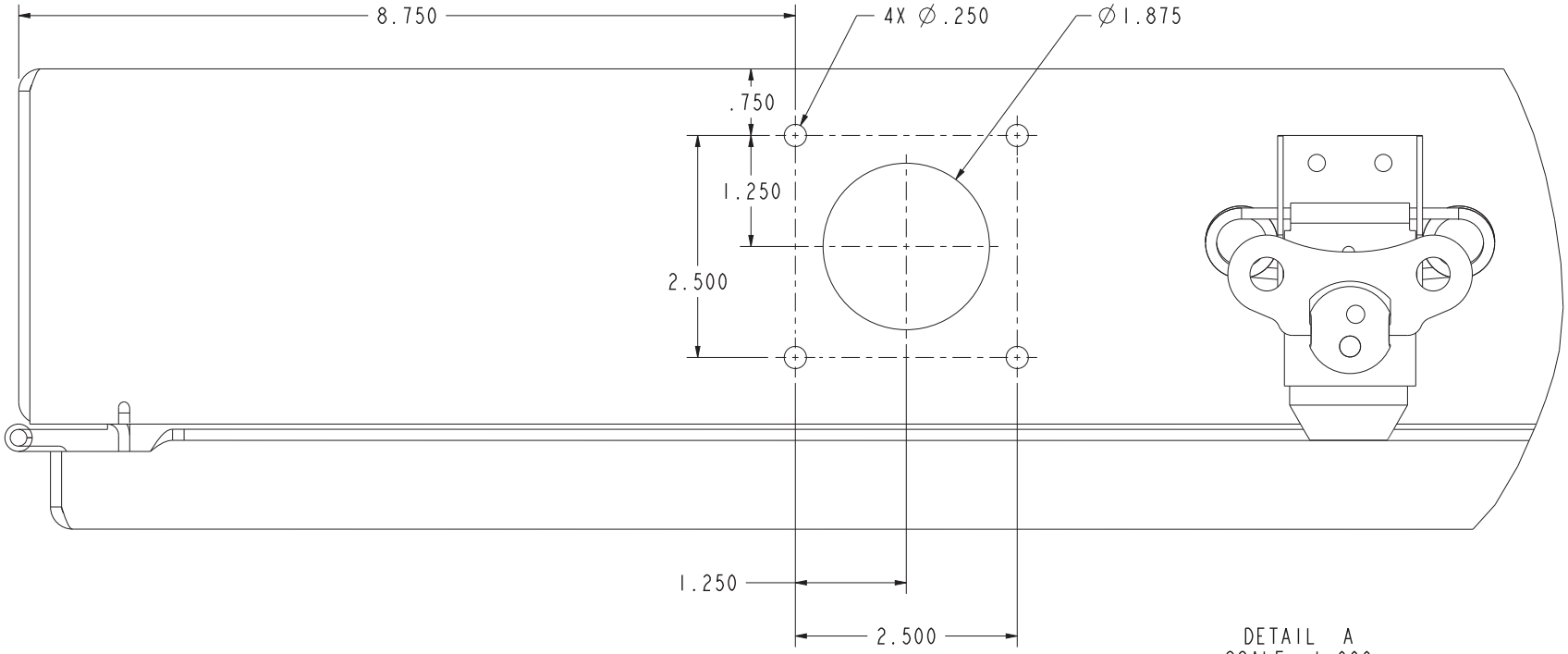

DETAIL A
SCALE 1.000

AP-F23

TYP TOL: ±1/16" ANGLES: ± 2°		DATE: 10-MAR-11 SHEET 3 OF 3	3030 DOT, PELCO-MOUNTING	INV ID#:
		SignalTech	JDG	PROD ID#:
			4985 Pittsburgh Ave Erie, PA 16509	CUST ID#:

Vanguard® VS-5220 VSLS

Daktronics Vanguard® VS-5220 variable speed limit signs (VSLS) are designed to be an integrated, enforceable, and affordable part of a traffic management system. The signs provide high legibility 18-inch digits that are easily changed as traffic and weather conditions change.

The VS-5220 features an active LED speed limit pixel matrix and surrounding reflective 48-inch wide by 60-inch tall MUTCD-compliant static panel. The high-resolution LED pixel matrix allows clearly formed black digits on a white background that approximate the E-series fonts specified by the MUTCD. In freeway situations, the signs are nearly indistinguishable from static signs. All of this makes them more easily enforced than the amber VSLS seen in the market today.

The signs use a blend of long-life red, green, and blue LEDs to create the white light used for the speed limit background. An integrated light sensor automatically adjusts the LED intensity for all ambient lighting levels. Under full sunlight, the LEDs match the reflectivity of the surrounding speed limit panel. At night, the LEDs dim to a very legible level that will not blind drivers and is not washed out by headlights. Our long-life LED technology is designed for a 100,000 hour life and consumes less than 150 watts at full intensity.

The VS-5220 is designed for the roadside environment and features a number of features typically found only in high-end variable message signs (VMS). A forced-air ventilation system provides filtered air to keep the sign cool. Pixel diagnostics allow remote monitoring of the sign to ensure legibility, and the internal controller and mounting location for communication equipment eliminates the need for costly traffic cabinets.

The VS-5220 features a powerful NTCIP-compliant controller that integrates into nearly any traffic management system. The posted speed limit can be scheduled or controlled manually. The built-in logging function keeps track of all speed limit changes. Daktronics offers Vanguard software, which can control, configure, and monitor the VSLS, as well as any other NTCIP-compliant DMS.

The Vanguard VS-5220 VSLS are the best choice for a speed management solution. The signs offer the features needed, and allow integration into any NTCIP-compatible traffic management system.

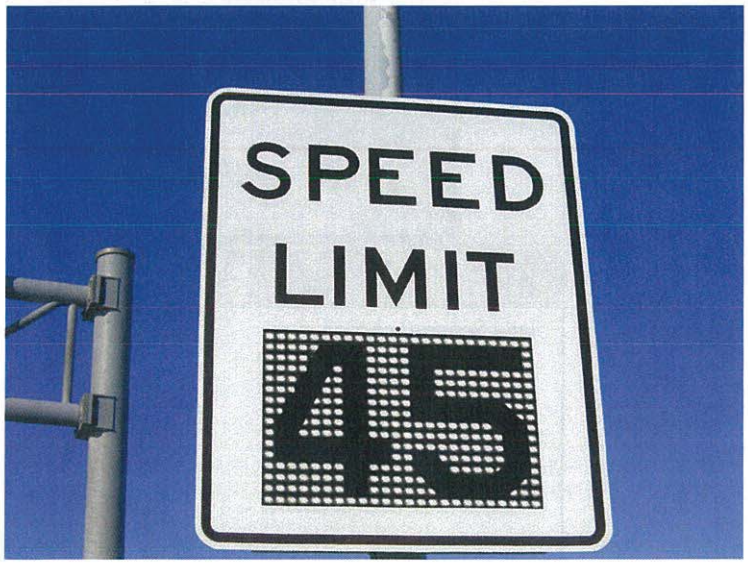

Vanguard® VS-5220 VSLS

Key Features

Dynamic Sign Panel

- Programmable matrix capable of two - 18-inch (473 mm) speed digits
- Black digits on white background
- Legible from greater than 1000 ft (305 m)
- High-intensity LED technology
- Wide 30-degree LED viewing angle
- Minimum brightness of 12,400 cd/m2
- Pixel self-diagnostics ensure legibility
- Contrast-enhancing louvers shield pixels from sunlight
- Built-in pixel diagnostics monitor LED operation
- Automatic brightness control using integrated light sensor

Static Sign Panel

- 48-inch by 60-inch aluminum panel
- MUTCD-compliant
- Reflective white 3M sheeting

Cabinet Style

- Lightweight all-aluminum cabinet construction
- Front service access cabinet for easy maintenance
- Forced-air, filtered ventilation system keeps sign cool
- Mounts to existing poles (hardware not included)

Control System & Diagnostics

- Internal NTCIP-compliant controller
- Automatic speed change logging
- Manual or scheduled speed control
- Available Vanguard control software

DAKTRONICS

Vanguard® VS-5220 VSLS

Specifications

Dynamic Sign Panel Specifications
- Pixel Matrix: 16 rows by 24 columns
- Pixel Pitch: 1.33 in (34 mm)
- Default Font Size: 14 rows by 10 columns
- Active Area: 1'9" H x 2'8" W (544 mm x 816 mm)

Static Sign Panel Specifications
- MUTCD-compiant speed limit panel
- 60" H x 48" W (1.52 m x 1.22 m) panel
- Reflective white 3M sheeting with black E-series lettering

Physical Specifications
- Speed Limit Panel Size: 60" H x 48" W (1.52 m x 1.22 m)
- Sign Cabinet Size: 27" H x 35" W x 6" D (686 mm x 889 mm x 152 mm)
- Sign Weight: 100 lbs (45.4 kg)
- Operating Temperature Range: -40° F to +140° F (-40° C to +60° C)
- Humidity Range: 0 to 99%, non-condensing
- 120 VAC single-phase power (2 wires plus ground)
- Max Power: 197 watts
- Typical Power: 145 watts

Controller Specifications
- NTCIP-compatible controller
- Compatible with dial-up, cellular, fiber, Ethernet, radio, RS-232, RS-422, and other communication devices
- Controller mounted within cabinet
- Internal mounting shelf for communication equipment

Design and Manufacturing Standards
- NTCIP-compliant control system
- Designed to AASHTO wind-load requirements
- Welders certified to AWS D1.2
- NEMA 3R cabinet rating

NTCIP Communication Standards
- NTCIP 1203 – DMS Objects
- NTCIP 1201 – Global Objects
- NTCIP 1101 – STMF
- NTCIP 2101 – PMPP/RS-232
- NTCIP 2103 – PPP/RS-232
- NTCIP 2104 – Ethernet
- NTCIP 2202 – TCP/IP
- NTCIP 2301 – STMF

Daktronics VSLS versus Static Sign

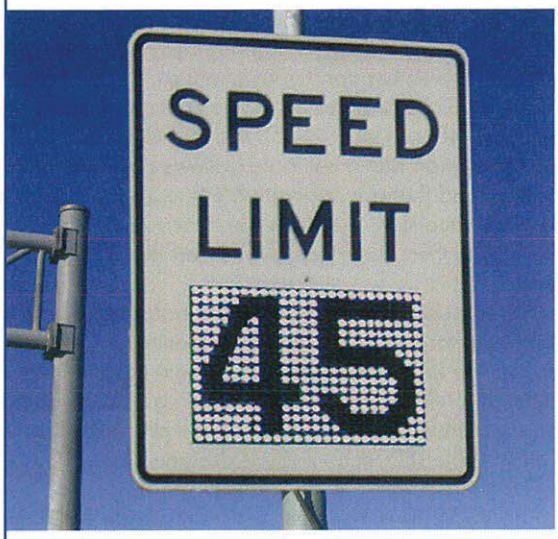

Vanguard® VS-5220 VSLS

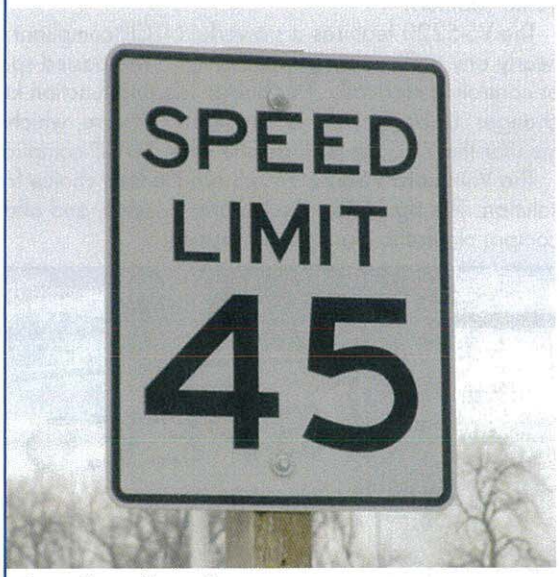

Static Speed Limit Sign

117 Prince Drive PO Box 5120 Brookings, SD 57006-5120
tel 888-DAKTRAN 605-697-4067 fax 605-697-4700
www.daktronics.com/its e-mail transportation@daktronics.com
Vanguard® is a trademark of Daktronics
Copyright © 2007 Daktronics SL-09868 Rev 01 110907 Page 2 of 2

DAKTRONICS®

SIDE VIEW

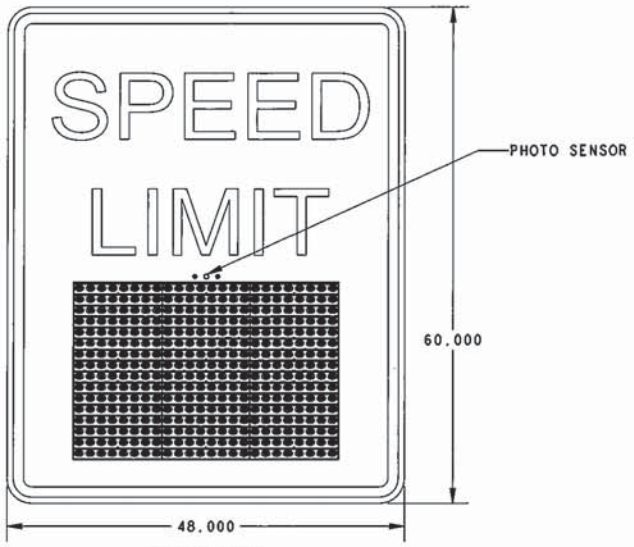

FRONT VIEW

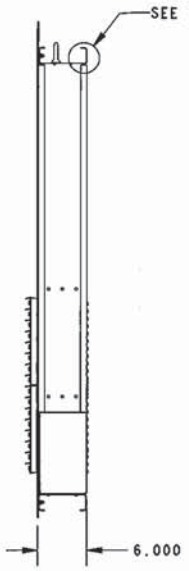

SIDE VIEW

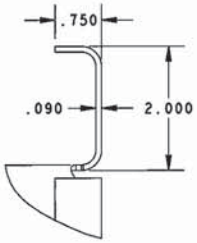

DETAIL A
TYPICAL MOUNTING
FLANGE DIMENTIONS
SCALE 1/2

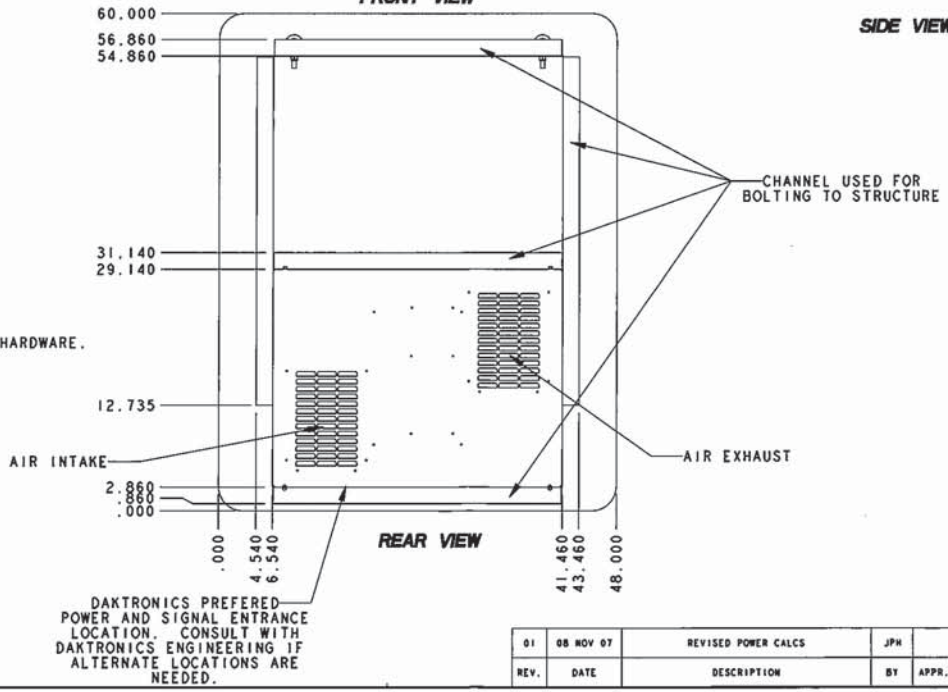

REAR VIEW

NOTES:
1) MATRIX SIZE 16 X 24 1.34 (34MM) PIXEL SPACING
2) REVERSE FONT USED FOR BLACK LETTERING ON WHITE BACKGROUND
3) REFLECTIVE FACE
4) DIMENSIONS ARE IN INCHES UNLESS OTHERWISE NOTED.
5) MAINTANCE OF DISPLAY IS VIA MODULES.
6) ALL ALLUMINUM CONSTRUCTION WITH STAINLESS STEEL HARDWARE.
7) WEIGHT OF DISPLAY IS APPROX. 100 LBS.
8) POWER CALCS: 197 MAX WATTS 145 TYP WATTS

REV.	DATE	DESCRIPTION	BY	APPR.
01	08 NOV 07	REVISED POWER CALCS	JPH	

THE CONCEPTS EXPRESSED AND DETAILS SHOWN ON THIS DRAWING ARE CONFIDENTIAL AND PROPRIETARY. DO NOT REPRODUCE BY ANY MEANS, INCLUDING ELECTRONICALLY WITHOUT THE EXPRESSED WRITTEN CONSENT OF DAKTRONICS, INC. COPYRIGHT 2004 DAKTRONICS, INC.

DAKTRONICS, INC. BROOKINGS, SD 57006

PROJ: VANGUARD VMS

TITLE: SHOP DRAWING, VARIABLE SPEED LIMIT SIGN

DES. BY: JSYRSTAD DRAWN BY: JHALIBU DATE: 22 OCT 07

REVISION SHEET 1 OF DWG 323355 SCALE: 1=15

1398 - E07B - 323355

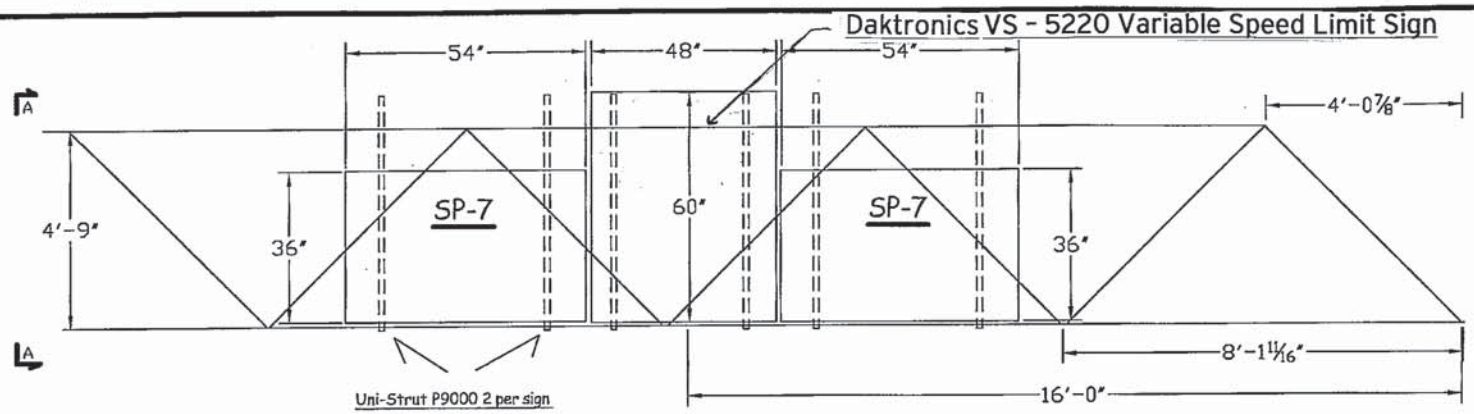

SPACE FRAME DETAIL

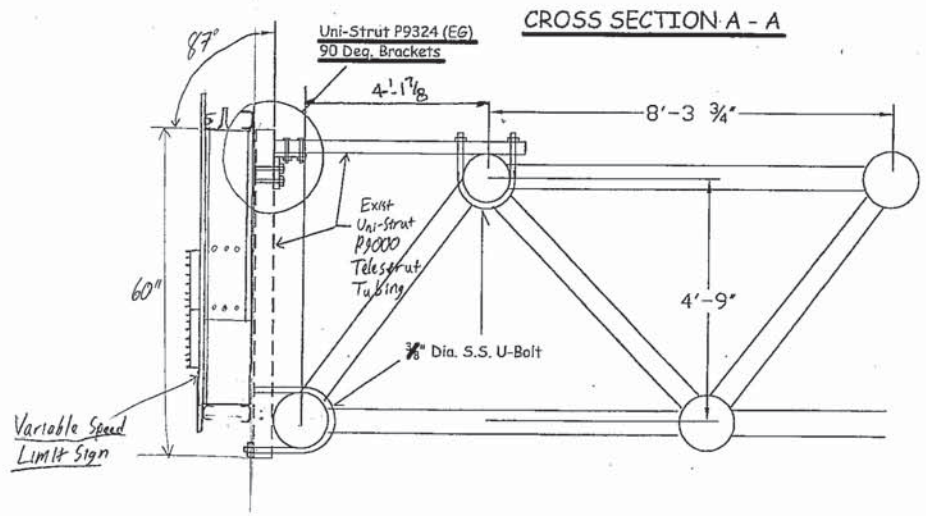

GENERAL NOTES:

1. All proposed Uni-strut parts and mounting hardware will be hot dip galvanized (HG) complying with ASTM A123 or A153.
2. All bolt attachments to the dynamic sign will be field drilled.
3. The bottom of the new sign is to be aligned with the existing signs.
4. Actual bolt locations shall be determined by the contractor. Connections shall be made with a minimum of 4 – 3/8 in. diameter A307 bolts, or approved equals. There should be two bolts at the top and two at the bottom +/-.
5. All bolted connections shall be made through the dynamic message sign mounting flanges and Uni-strut support brackets.
6. The contractor may relocate the support brackets. The support brackets shall also be spaced at no less than 24 inches.

APPENDIX G

SIGN DETAILS

SIGN DETAIL
1:40

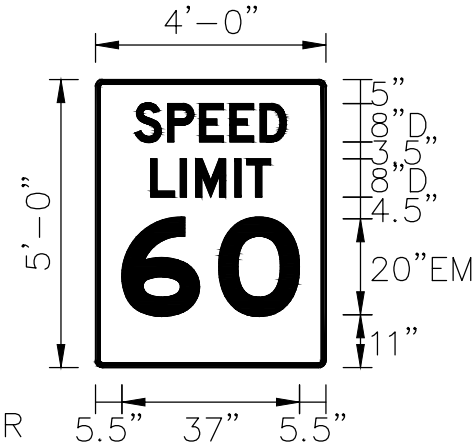

BORDER
R=1.13"
TH=0.63"
IN=0.38"

Panel Style: regulatory.ssi
M.U.T.C.D.: 2009 Edition

Panel Style: regulatory.ssi
Dimensions are in inches.tenths

Letter locations are panel edge to lower left corner

SIGN NUMBER	R2–1(60)
WIDTH x HGHT.	4'–0" x 5'–0"
BORDER WIDTH	0.63"
CORNER RADIUS	0"
MOUNTING	Overhead
BACKGROUND	TYPE: Reflective
	COLOR: White
LEGEND/BORDER	TYPE: Reflective
	COLOR: Black/Black

SYMBOL	ROT	X	Y	WID	HT

LETTER POSITIONS (X)																				LENGTH	SERIES/SIZE
S	P	E	E	D																	D 2000
8.2	15	21.7	28	34.3																31.5	8
L	I	M	I	T																	D 2000
11.5	17.7	20.9	29	31.5																25	8
6	0																				EM 2000
5.5	25.7																			37	20

AP-G1

SIGN DETAIL
1:60

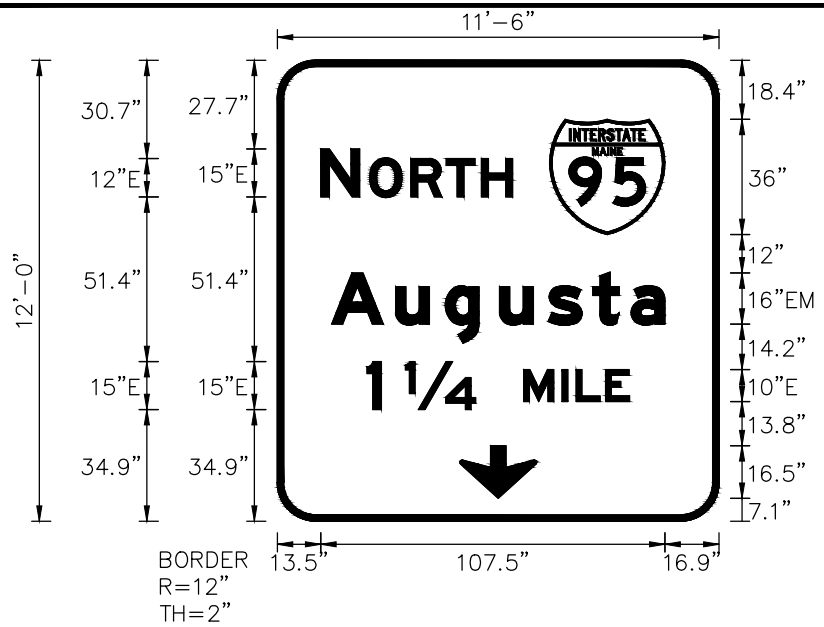

SIGN NUMBER	D-1
WIDTH x HGHT.	11'-6" x 12'-0"
BORDER WIDTH	2"
CORNER RADIUS	0"
MOUNTING	Overhead
BACKGROUND	TYPE: Reflective
	COLOR: Green
LEGEND/BORDER	TYPE: Reflective
	COLOR: White/White

SYMBOL	ROT	X	Y	WID	HT
ARDOWN	0	57	7.1	24	16.5

Panel Style: guide_fwy_overhead_arrow-per-lane.ssi
Dimensions are in inches.tenths

Panel Style: guide_fwy_overhead_arrow-per-lane.ssi
M.U.T.C.D.: 2009 Edition
Letter locations are panel edge to lower left corner

LETTER POSITIONS (X)																				LENGTH	SERIES/SIZE
A	u	g	u	s	t	a															EM 2000
16.9	36.9	52.4	69.4	84.6	98.5	110.5														104.2	16/12
1	1/4	M	I	L	E																E 2000
28	40	76.9	88.9	93.3	102.5															82.1	15,10

AP-G2

SIGN DETAIL
1:60

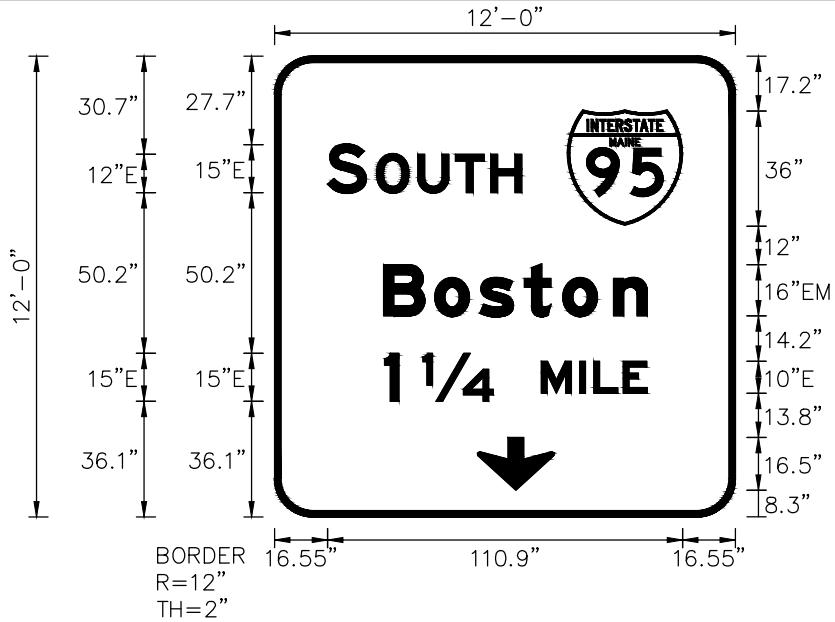

SIGN NUMBER	D–2
WIDTH x HGHT.	12'–0" x 12'–0"
BORDER WIDTH	2"
CORNER RADIUS	0"
MOUNTING	Overhead
BACKGROUND	TYPE: Reflective
	COLOR: Green
LEGEND/BORDER	TYPE: Reflective
	COLOR: White/White

SYMBOL	ROT	X	Y	WID	HT
ARDOWN	0	63.4	8.4	24	16.5

Panel Style: guide_fwy_overhead_arrow–per–lane.ssi
Dimensions are in inches.tenths

Panel Style: guide_fwy_overhead_arrow–per–lane.ssi
M.U.T.C.D.: 2009 Edition
Letter locations are panel edge to lower left corner

LETTER POSITIONS (X)																				LENGTH	SERIES/SIZE
S	O	U	T	H																	E 2000
16.5	31.9	44.7	56.5	67.5																60.7	15,12
B	o	s	t	o	n																EM 2000
34	50	64.1	78	90	105.9															82.4	16/12
1	1/4	M	I	L	E																E 2000
34.4	46.4	83.3	95.3	99.7	108.9															82.1	15,10

AP-G3

SIGN DETAIL
1:20

SIGN NUMBER	name
WIDTH x HGHT.	3'–0" x 3'–0"
BORDER WIDTH	0"
CORNER RADIUS	0"
MOUNTING	Overhead
BACKGROUND	TYPE: Reflective
	COLOR: Green
LEGEND/BORDER	TYPE: Reflective
	COLOR: White/By Block

SYMBOL	ROT	X	Y	WID	HT
M1_1	0	0	0	36	36

Panel Style: guide_exp_advance_a.ssi
Dimensions are in inches.tenths

Letter locations are panel edge to lower left corner

LETTER POSITIONS (X)																				LENGTH	SERIES/SIZE
I	N	T	E	R	S	T	A	T	E												C
6.2	7.5	10.2	12.7	15.2	18	20.7	22.8	25.4	27.9											23.7	3.8
M	A	I	N	E																	D
13.3	15.6	18.1	19	21.2																9.4	2.4
9	5																				D
6	19.8																			24	15

AP-G4

SIGN DETAIL
1:60

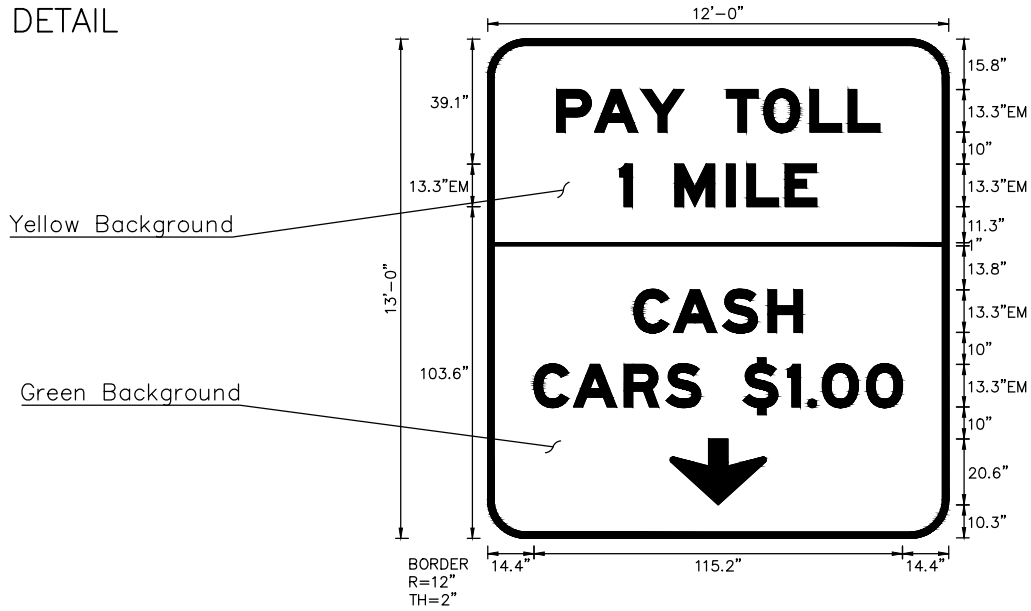

Panel Style: Advance Toll Cash & ORT.ssi
Dimensions are in inches.tenths

Panel Style: Advance Toll Cash & ORT.ssi
M.U.T.C.D.: 2009 Edition
Letter locations are panel edge to lower left corner

SIGN NUMBER	SP-1
WIDTH x HGHT.	12'-0" x 13'-0"
BORDER WIDTH	2"
CORNER RADIUS	0"
MOUNTING	Overhead
BACKGROUND	TYPE: Reflective
	COLOR: Green / Yellow
LEGEND/BORDER	TYPE: Reflective
	COLOR: Black/White

SYMBOL	ROT	X	Y	WID	HT
ARDOWN	0	57	10.4	30	20.6

LETTER POSITIONS (X)																				LENGTH	SERIES/SIZE
P	A	Y		T	O	L	L														EM 2000
21.5	33.4	47.9	61.3	74.6	86.3	100.7	112.6													100.9	13.3
1	M	I	L	E																	EM 2000
41.2	58.5	74.6	81	92.9																61.6	13.3
C	A	S	H																		EM 2000
45.7	58	73.5	87.6																	52.7	13.3
C	A	R	S		$	1	.	0	0												EM 2000
14.4	26.8	42.6	55.8	66.5	79.8	93.7	100.1	104.6	118.4											115.2	13.3

AP-G5

SIGN DETAIL
1:60

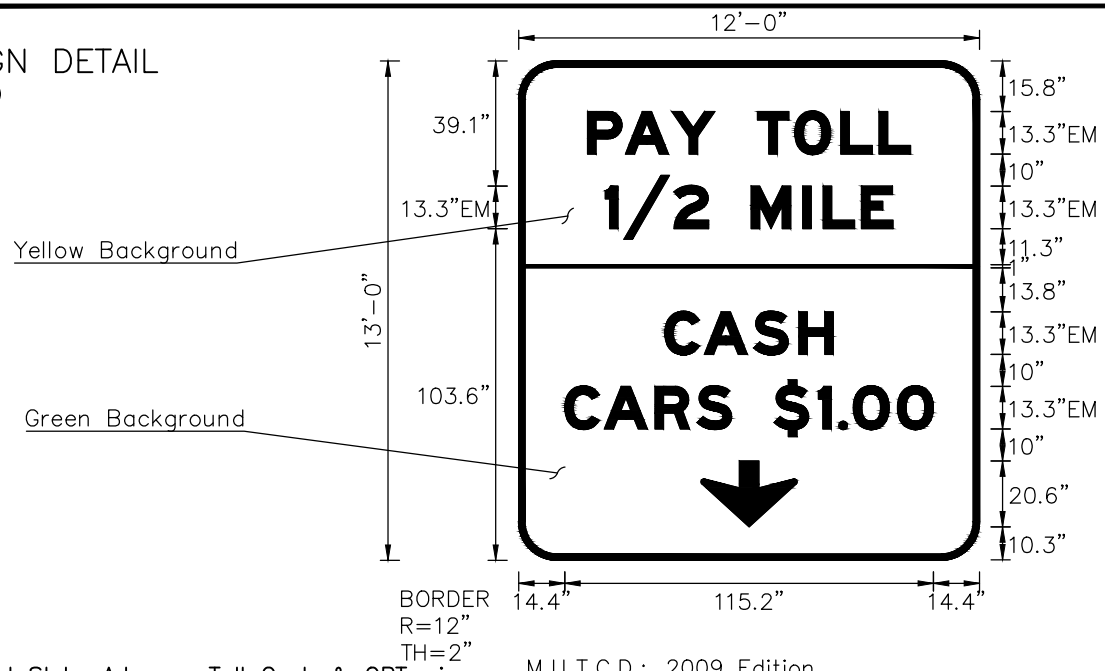

SIGN NUMBER	SP-2
WIDTH x HGHT.	12'-0" x 13'-0"
BORDER WIDTH	2"
CORNER RADIUS	0"
MOUNTING	Overhead
BACKGROUND	TYPE: Reflective
	COLOR: Green / Yellow
LEGEND/BORDER	TYPE: Reflective
	COLOR: Black/White

SYMBOL	ROT	X	Y	WID	HT
ARDOWN	0	57	10.4	30	20.6

Panel Style: Advance Toll Cash & ORT.ssi
Dimensions are in inches.tenths

M.U.T.C.D.: 2009 Edition

Letter locations are panel edge to lower left corner

LETTER POSITIONS (X)																				LENGTH	SERIES/SIZE
P	A	Y		T	O	L	L														EM 2000
21.5	33.4	47.9	61.3	74.6	86.3	100.7	112.6													100.9	13.3
1	/	2	M	I	L	E															EM 2000
27	32.9	48.6	72.7	88.8	95.1	107.1														89.9	13.3
C	A	S	H																		EM 2000
45.7	58	73.5	87.6																	52.7	13.3
C	A	R	S		$	1	.	0	0												EM 2000
14.4	26.8	42.6	55.8	66.5	79.8	93.7	100.1	104.6	118.4											115.2	13.3

AP-G6

SIGN DETAIL
1:60

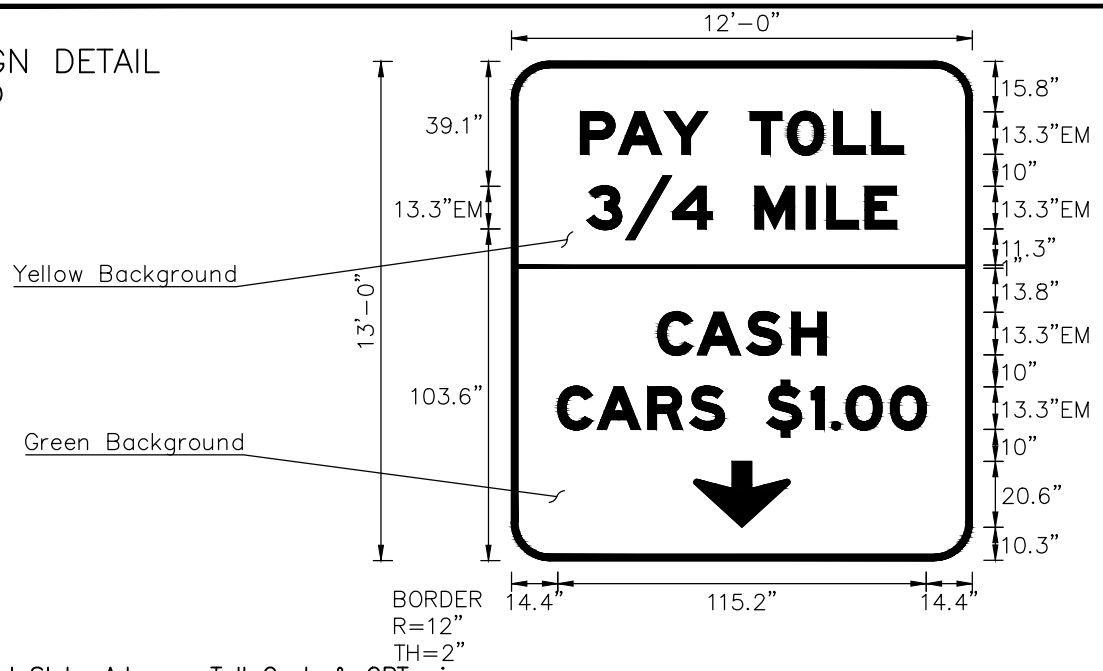

SIGN NUMBER	SP–1a
WIDTH x HGHT.	12'–0" x 13'–0"
BORDER WIDTH	2"
CORNER RADIUS	0"
MOUNTING	Overhead
BACKGROUND	TYPE: Reflective
	COLOR: Green / Yellow
LEGEND/BORDER	TYPE: Reflective
	COLOR: Black/White

SYMBOL	ROT	X	Y	WID	HT
ARDOWN	0	57	10.4	30	20.6

Panel Style: Advance Toll Cash & ORT.ssi
Dimensions are in inches.tenths

Letter locations are panel edge to lower left corner

LETTER POSITIONS (X)																				LENGTH	SERIES/SIZE
P	A	Y		T	O	L	L														EM 2000
21.5	33.4	47.9	61.3	74.6	86.3	100.7	112.6													100.9	13.3
3	/	4	M	I	L	E															EM 2000
23.7	35.8	50.4	76.1	92.1	98.5	110.5														96.7	13.3
C	A	S	H																		EM 2000
45.7	58	73.5	87.6																	52.7	13.3
C	A	R	S		$	1	.	0	0												EM 2000
14.4	26.8	42.6	55.8	66.5	79.8	93.7	100.1	104.6	118.4											115.2	13.3

AP-G7

SIGN DETAIL
1:40

BORDER
R=1.38"
TH=0.75"
IN=0.5"

Panel Style: warning_Rectangular.ssi
M.U.T.C.D.: 2009 Edition

SIGN NUMBER	W9-6
WIDTH x HGHT.	8'-0" x 5'-6"
BORDER WIDTH	0.75"
CORNER RADIUS	0"
MOUNTING	Overhead
BACKGROUND	TYPE: Reflective
	COLOR: Yellow
LEGEND/BORDER	TYPE: Reflective
	COLOR: Black/Black

SYMBOL	ROT	X	Y	WID	HT

Panel Style: warning_Rectangular.ssi
Dimensions are in inches.tenths

Letter locations are panel edge to lower left corner

LETTER POSITIONS (X)																				LENGTH	SERIES/SIZE
P	A	Y		T	O	L	L														EM 2000
11.6	20.5	31.4	41.5	51.5	60.3	71.1	80.1													75.9	10
2		M	I	L	E	S															EM 2000
18.9	27	37	49.1	53.9	62.9	72.1														61.3	10
C	A	R	S		$	1	.	0	0												EM 2000
4.7	14	25.9	35.8	43.9	53.9	64.3	69.1	72.5	82.9											86.6	10

AP-G8

SIGN DETAIL
1:40

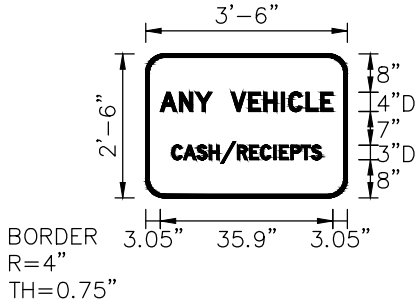

Panel Style: guide_fwy_Toll_White.ssi
M.U.T.C.D.: 2009 Edition

SIGN NUMBER	SP–6
WIDTH x HGHT.	3'–6" x 2'–6"
BORDER WIDTH	0.75"
CORNER RADIUS	0"
MOUNTING	Overhead
BACKGROUND	TYPE: Reflective
	COLOR: White
LEGEND/BORDER	TYPE: Reflective
	COLOR: Black/Black

SYMBOL	ROT	X	Y	WID	HT

Panel Style: guide_fwy_Toll_White.ssi
Dimensions are in inches.tenths

Letter locations are panel edge to lower left corner

LETTER POSITIONS (X)																				LENGTH	SERIES/SIZE
A	N	Y		V	E	H	I	C	L	E											D 2000
3	7	10.4	13.8	17.8	21.4	24.6	28.3	29.8	33.4	36.5										35.9	4
C	A	S	H	/	R	E	C	I	E	P	T	S									D 2000
5.5	7.9	10.7	13.3	15.7	19.1	21.7	24	26.7	27.9	30.2	32.5	34.6								31.1	3

AP-G9

SIGN DETAIL
1:40

Panel Style: warning_Rectangular.ssi
M.U.T.C.D.: 2009 Edition

SIGN NUMBER	W9–6a
WIDTH x HGHT.	9'–6" x 5'–6"
BORDER WIDTH	0.75"
CORNER RADIUS	0"
MOUNTING	Overhead
BACKGROUND	TYPE: Reflective
	COLOR: Yellow
LEGEND/BORDER	TYPE: Reflective
	COLOR: Black/Black

SYMBOL	ROT	X	Y	WID	HT

Panel Style: warning_Rectangular.ssi
Dimensions are in inches.tenths

Letter locations are panel edge to lower left corner

LETTER POSITIONS (X)																				LENGTH	SERIES/SIZE
S	T	O	P		A	H	E	A	D												EM 2000
7.7	17.3	26.1	36.9	45	55	66.9	77.8	86.3	98.2											98.6	10
P	A	Y		T	O	L	L														EM 2000
19.1	28	38.9	49	59	67.8	78.6	87.6													75.9	10
C	A	R	S		$	1	.	0	0												EM 2000
13.7	23	34.9	44.8	52.9	62.9	73.3	78.1	81.5	91.9											86.6	10

AP-G10

SIGN DETAIL
1:60

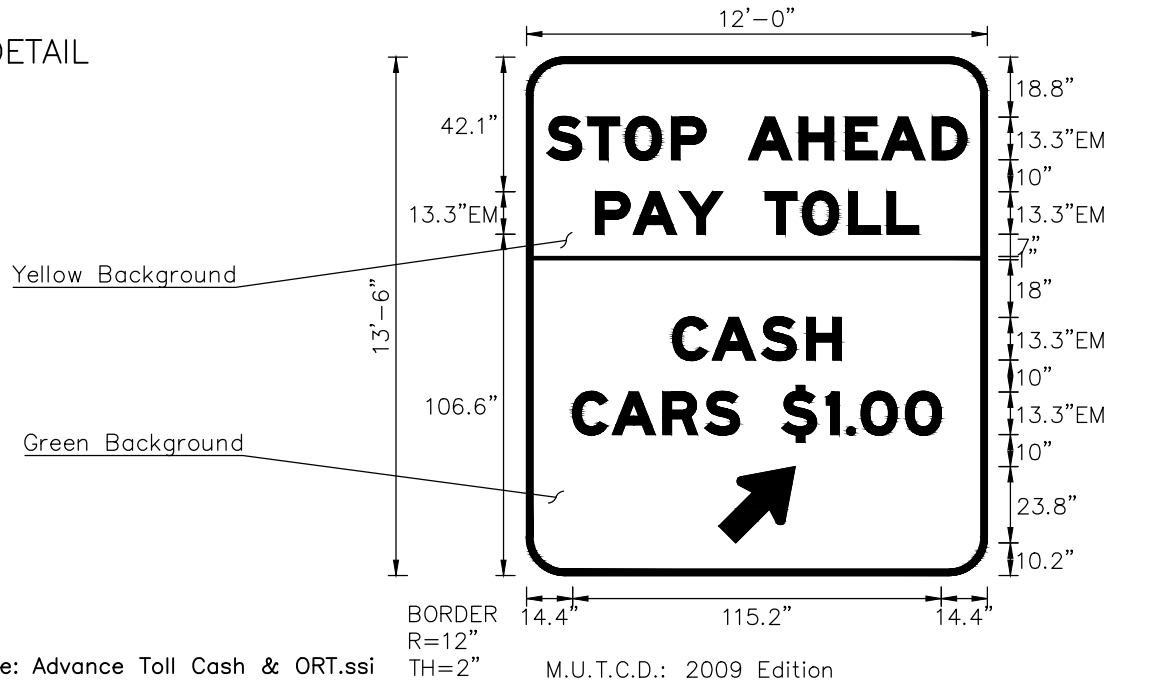

SIGN NUMBER	SP–4
WIDTH x HGHT.	12'–0" x 13'–6"
BORDER WIDTH	2"
CORNER RADIUS	0"
MOUNTING	Overhead
BACKGROUND	TYPE: Reflective
	COLOR: Green / Yellow
LEGEND/BORDER	TYPE: Reflective
	COLOR: Black/White

SYMBOL	ROT	X	Y	WID	HT
AR_Type D	315	60.1	10.2	20	30

Panel Style: Advance Toll Cash & ORT.ssi
Dimensions are in inches.tenths

M.U.T.C.D.: 2009 Edition
Letter locations are panel edge to lower left corner

LETTER POSITIONS (X)																				LENGTH	SERIES/SIZE
S	T	O	P		A	H	E	A	D												EM 2000
6.4	19.2	30.9	45.3	56	69.3	85.2	99.7	111	126.8											131.1	13.3
P	A	Y	T	O	L	L															EM 2000
21.5	33.4	47.9	74.6	86.3	100.7	112.6														100.9	13.3
C	A	S	H																		EM 2000
45.7	58	73.5	87.6																	52.7	13.3
C	A	R	S		$	1	.	0	0												EM 2000
14.4	26.8	42.6	55.8	66.5	79.8	93.7	100.1	104.6	118.4											115.2	13.3

AP-G11

SIGN DETAIL
1:5

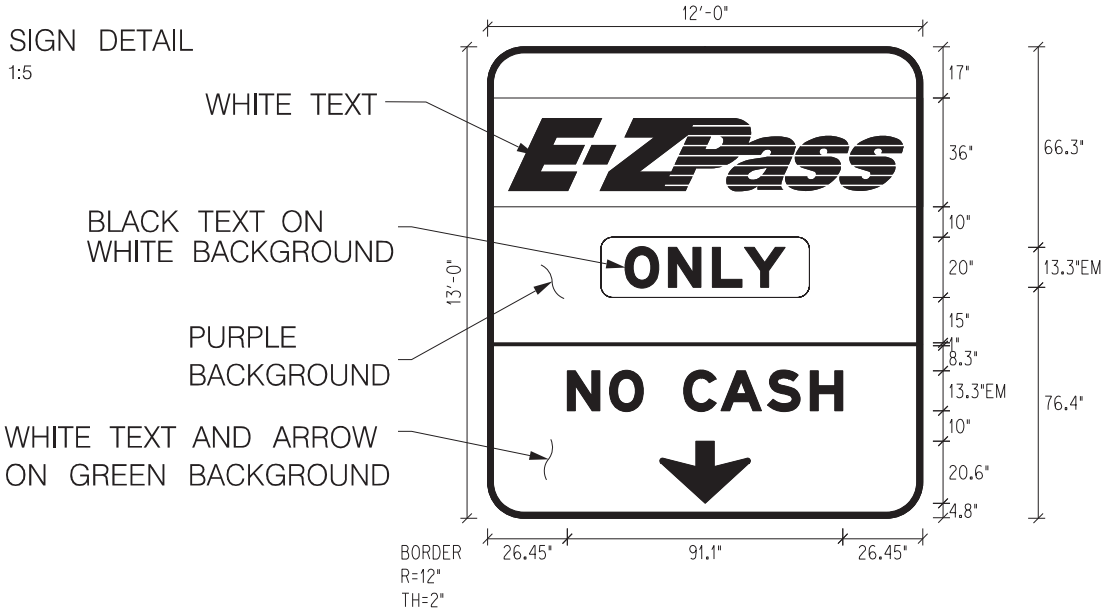

SIGN NUMBER	R3–16	
WIDTH x HGHT.	12'–0" x 13'–0"	
BORDER WIDTH	2"	
CORNER RADIUS	12"	
MOUNTING	Overhead	
BACKGROUND	TYPE:	Reflective
	COLOR:	Purple, Green
LEGEND/BORDER	TYPE:	Reflective
	COLOR:	Varies/White

SYMBOL	ROT	X	Y	WID	HT
EZPASS	0	0	103	144	36
ARDOWN	0	57	4.9	30	20.6

Panel Style: Advance Toll Cash & ORT.ssi
M.U.T.C.D.: 2003 Edition

Panel Style: Advance Toll Cash & ORT.ssi
Dimensions are in inches.tenths

Letter locations are panel edge to lower left corner

LETTER POSITIONS (X)																					LENGTH	SERIES/SIZE
O	N	L	Y																			EM 2000
45.5	59.9	74.4	85																		52.9	13.3
N	O		C	A	S	H																EM 2000
26.4	40.4	51.6	64.9	77.3	92.7	106.8															91.1	13.3

AP-G12

SIGN DETAIL
1:80

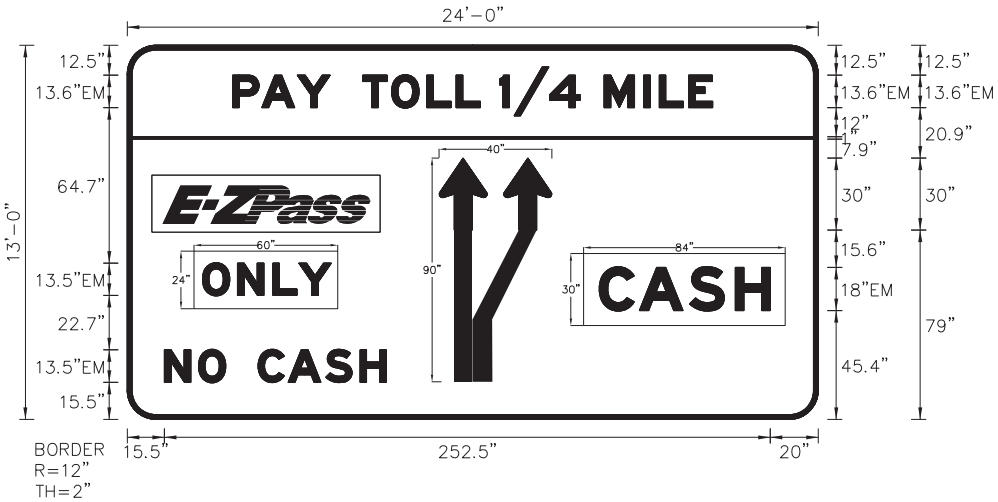

Panel Style: Guide Toll Distance.ssi
M.U.T.C.D.: 2009 Edition

SIGN NUMBER	SP-5a
WIDTH x HGHT.	24'-0" x 13'-0"
BORDER WIDTH	2"
CORNER RADIUS	0"
MOUNTING	Overhead
BACKGROUND	TYPE: Reflective
	COLOR: Green / Yellow
LEGEND/BORDER	TYPE: Reflective
	COLOR: Black/White

SYMBOL	ROT	X	Y	WID	HT
AR_Type D	0	130	79	20	30
AR_Type D	0	156.9	79	20	30

Panel Style: Guide Toll Distance.ssi
Dimensions are in inches.tenths

Letter locations are panel edge to lower left corner

LETTER POSITIONS (X)																				LENGTH	SERIES/SIZE
P	A	Y		T	O	L	L	1	/	4	M	I	L	E							EM 2000
43.9	56.1	70.9	84.6	98.2	110.2	124.9	137.1	155.2	161.2	176.1	198.8	215.2	221.7	234						200.1	13.6
O	N	L	Y																		EM 2000
31.4	46	60.7	71.5																	53.7	13.5
C	A	S	H																		EM 2000
196.7	213.5	234.3	253.4																	71.3	18
N	O		C	A	S	H															EM 2000
15.5	29.7	41	54.5	67.1	82.7	97														92.5	13.5

AP-G13

SIGN DETAIL

1:3

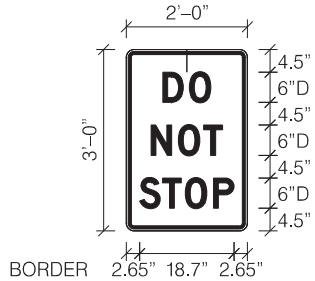

BORDER
R = 1.13"
TH = 0.63"
IN = 0.38"

Panel Style: regulatory.ssi
M.U.T.C.D.: 2003 Edition

SIGN NUMBER	SP–7	
WIDTH x HGHT.	2'–0" x 3'–0"	
BORDER WIDTH	0.63"	
CORNER RADIUS	1.13"	
MOUNTING	Ground	
BACKGROUND	TYPE:	Reflective
	COLOR:	White
LEGEND/BORDER	TYPE:	Reflective
	COLOR:	Black

SYMBOL	ROT	X	Y	WID	HT

Panel Style: regulatory.ssi
Dimensions are in inches.tenths

Letter locations are panel edge to lower left corner

LETTER POSITIONS (X)																					LENGTH	SERIES/SIZE
D	O																					D 2000
7.2	12.5																				9.5	6
N	O	T																				D 2000
4.9	10.3	15.4																			14.2	6
S	T	O	P																			D 2000
2.6	7.2	11.7	17.3																		18.7	6

AP-G14

SIGN DETAIL

1:3

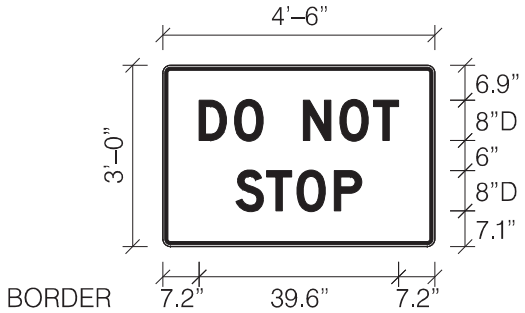

BORDER
R = 1.13"
TH = 0.63"
IN = 0.38"

Panel Style: regulatory.ssi
M.U.T.C.D.: 2003 Edition

SIGN NUMBER	SP–7w	
WIDTH x HGHT.	4'–6" x 3'–0"	
BORDER WIDTH	0.63"	
CORNER RADIUS	1.13"	
MOUNTING	Overhead	
BACKGROUND	TYPE:	Reflective
	COLOR:	White
LEGEND/BORDER	TYPE:	Reflective
	COLOR:	Black

SYMBOL	ROT	X	Y	WID	HT

Panel Style: regulatory.ssi
Dimensions are in inches.tenths

Letter locations are panel edge to lower left corner

LETTER POSITIONS (X)																					LENGTH	SERIES/SIZE
D	O		N	O	T																	D 2000
7.2	14.2	19.9	27.9	35.1	41.8																39.6	8
S	T	O	P																			D 2000
14.5	20.6	26.6	34																		25	8

AP-G15