Date:10/28/2016

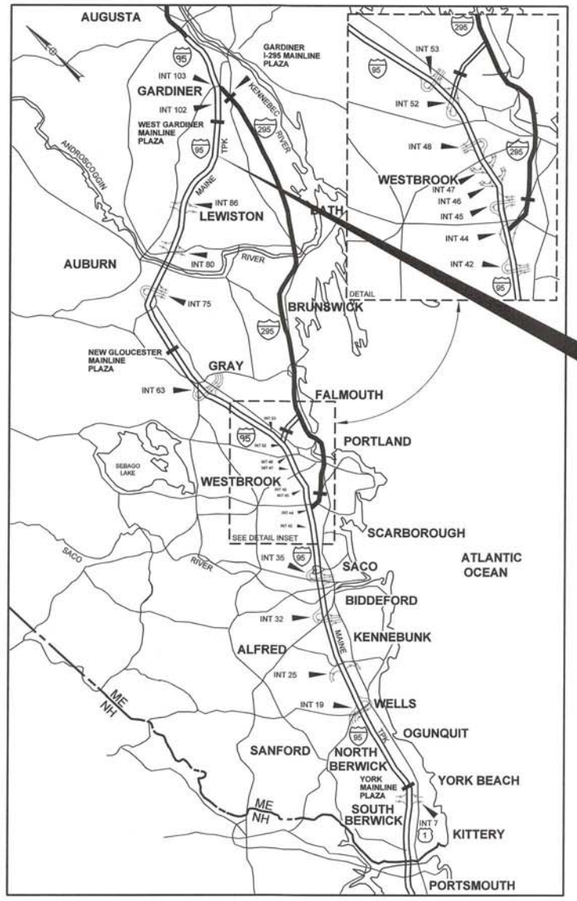

LOCATION MAP

CONTRACT 2017.03
BRIDGE REPLACEMENT
MAXWELL ROAD

MAINE TURNPIKE

THE GOLD STAR MEMORIAL HIGHWAY

MAINE TURNPIKE AUTHORITY

DANIEL E. WATHEN, CHAIR
ROBERT D. STONE, VICE CHAIR
MICHAEL J. CIANCHETTE, MEMBER
BRYAN P. CUTCHEN, MEMBER
JOHN E. DORITY, MEMBER
KAREN S. DOYLE, MEMBER EX-OFFICIO

S. PETER MILLS, EXECUTIVE DIRECTOR

INDEX OF SHEETS

SHEET NO.	DESCRIPTION
1	TITLE SHEET
2	ESTIMATED QUANTITIES AND EARTHWORK SUMMARY
3	GENERAL NOTES
4	TYPICAL SECTIONS
5-8	MAINTENANCE OF TRAFFIC
9-11	MISCELLANEOUS DETAILS
12-13	PLAN
14-15	PROFILE
16	LIMIT OF DISTURBANCE
17-28	CROSS SECTIONS
29-51	STRUCTURAL PLANS
52-54	AS-BUILT STRUCTURAL PLANS

CONTRACT 2017.03
BRIDGE REPLACEMENT
MAXWELL ROAD UNDERPASS
MILE 90.0

CONTRACT 2017.03

APPROVED:

MAINE TURNPIKE AUTHORITY

PETER S. MERFELD, P.E. - CHIEF OPERATIONS OFFICER — DATE 11/8/16

STEPHEN R. TARTRE, P.E., - DIRECTOR OF ENGINEERING & BUILDING MAINTENANCE — DATE 11/8/16

HNTB

STATE OF MAINE
ROLAND A. LAVALLEE
No. 6452
LICENSED
PROFESSIONAL ENGINEER

ROLAND A. LAVALLEE P.E., PLS
VICE PRESIDENT
DIRECTOR OF OPERATIONS — DATE 10/31/16

Filename: 001_Title Sheet.dgn

ITEM NO.	ITEM DESCRIPTION	UNIT	STRUCTURAL QUANTITY	CIVIL QUANTITY	TOTAL QUANTITY
201.11	Clearing	AC		0.75	0.75
202.19	Removing Existing Bridge	LS	1		1
202.202	Removing Pavement Surface	SY		340	340
203.20	Common Excavation	CY		450	450
203.24	Common Borrow	CY		4,100	4,100
203.25	Granular Borrow	CY	570	40	610
206.082	Structural Earth Excavation - Major Structures, Plan Quantity	CY	630		630
304.10	Aggregate Subbase Course - Gravel	CY		1,100	1,100
403.208	Hot Mix Asphalt, 12.5 mm Nominal Maximum Size	Ton	110	170	280
403.209	Hot Mix Asphalt, 9.5 mm Nominal Maximum Size (sidewalks, drives, islands & incidentals)	Ton		10	10
403.213	Hot Mix Asphalt, 12.5 mm Nominal Maximum Size Base and Intermediate Base Course	Ton		240	240
409.15	Bituminous Tack Coat, Applied	Gal	40	80	120
501.231	Dynamic Loading Test	EA	2		2
501.54	Steel H-beam Piles 117 lb/ft, delivered	LF	316		316
501.541	Steel H-beam Piles 117 lb/ft, in place	LF	316		316
501.9	Pile Tips	EA	8		8
501.91	Pile Splices	EA	8		8
501.92	Pile Driving Equipment Mobilization	LS	1		1
502.219	Structural Concrete, Abutments and Retaining Walls	LS	1		1
502.239	Structural Concrete, Pier	LS	1		1
502.26	Structural Concrete Roadway and Sidewalk Slab on Steel Bridges	LS	1		1
502.31	Structural Concrete, Approach Slab	LS	1		1
502.49	Structural Concrete Curbs and Sidewalks	LS	1		1
503.14	Epoxy-Coated Reinforcing Steel, Fabricated and Delivered	LB	95,400		95,400
503.15	Epoxy-Coated Reinforcing Steel, Placing	LB	95,400		95,400
504.702	Structural steel, fabricated and delivered, welded	LS	1		1
504.71	Structural steel erection	LS	1		1
505.08	Shear Connectors	LS	1		1
506.9102	Zinc Rich Coating System (Shop Applied)	LS	1		1
507.0821	Steel Bridge Railing, 3 Bar	LS	1		1
508.14	High Performance Waterproofing Membrane	LS	1		1
508.15	Membrane Waterproofing	LS	1		1
511.091	Temporary Earth Support Systems	LS	1		1
512.081	French Drains	LS	1		1
514.06	Curing Box for Concrete Cylinders	EA	1		1
515.202	Clear Protective Coating for Concrete Surfaces	SY	510		510
520.23	Asphaltic Plug Joint	LF	56		56
523.52	Bearing Installation	EA	4		4
523.5401	Laminated Elastomeric Bearings, Fixed	EA	4		4
524.40	Protective Shielding - Steel Girders	SY	765		765
526.306	Temporary Concrete Barrier, Type I - Supplied by Authority	LS		1	1
527.341	Work Zone Crash Cushions - TL-3	Unit		2	2
603.152	12 inch HDPE Pipe Liner	LF		320	320
603.159	12 inch Culvert Pipe Option III	LF		35	35
603.28	Concrete Collar	EA		1	1
606.1728	W-Beam to 3-Bar Bridge Rail Transition	EA		4	4
606.231	Guardrail Type 3c -15 ft radius and less	LF		25	25
606.232	Guardrail Type 3c - over 15 ft radius	LF		62.5	62.5
606.233	Guardrail Type 3c - Single Rail, 7 Foot Posts	LF		775	775
606.265	Terminal End - Single Rail - Galvanized Steel	EA		2	2
606.356	Underdrain Delineator Post	EA		8	8
606.3561	Delineator Post - Remove and Reset	EA		10	10
606.3605	Guardrail - Remove, Modify, and Reset Single Rail	LF		540	540
606.47	Single Wood Post	EA		1	1
606.81	Tangent Guardrail Terminal - Energy Absorbing	EA		2	2
607.09	Woven Wire Fence - Metal Posts	LF		380	380
607.17	Chain Link Fence - 6 Foot	LF		500	500
607.23	Chain Link Fence Gate	EA		2	2
607.32	Bracing Assembly Type I - Metal Posts	EA		12	12

ITEM NO.	ITEM DESCRIPTION	UNIT	STRUCTURAL QUANTITY	CIVIL QUANTITY	TOTAL QUANTITY
607.33	Bracing Assembly Type II - Metal Posts	EA		10	10
607.431	Snow Fence	LF	200		200
609.11	Vertical Curb Type 1	LF	120		120
610.08	Plan Riprap	CY		150	150
610.18	Stone Ditch Protection	CY		110	110
613.319	Erosion Control Blanket	SY		4,450	4,450
615.07	Loam	CY		520	520
618.141	Seeding Method Number 3	Unit		42	42
619.1201	Mulch, Plan Quantity	Unit		42	42
619.1202	Temporary Mulch	LS		1	1
619.1401	Erosion Control Mix	CY	43		43
620.58	Erosion Control Geotextile	SY		550	550
627.73	Temporary 6 Inch Pavement Marking Tape	LF		1,450	1,450
627.731	Temporary 6 Inch Black Pavement Marking Tape	LF		840	840
629.05	Hand Labor, Straight Time	HR		100	100
631.10	Air Compressor (including operator)	HR		20	20
631.11	Air Tool (including operator)	HR		40	40
631.12	All Purpose Excavator (including operator)	HR		50	50
631.171	Truck - small (including operator)	HR		30	30
631.172	Truck - large (including operator)	HR		40	40
631.36	Foreman	HR		50	50
639.19	Field Office, Type B	EA		1	1
645.106	Demount Regulatory, Warning, Confirmation and Route Marker Assembly Sign	EA		5	5
645.108	Demount Pole	EA		5	5
645.116	Reinstall Regulatory, Warning, Confirmation and Route Marker Assembly Sign	EA		1	1
645.118	Reinstall Pole	EA		1	1
645.272	Regulatory, Warning, and Bridge Number Signs, Type I - Supplied by Authority	EA		4	4
652.30	Flashing Arrow	EA		2	2
652.312	Type III Barricades	EA		6	6
652.33	Drum	EA		110	110
652.34	Cone	EA		20	20
652.35	Construction Signs	SF		1,300	1,300
652.361	Maintenance of Traffic Control Devices	LS		1	1
652.38	Flaggers	HR		300	300
652.41	Portable Changeable Message Sign	EA		2	2
652.45	Truck Mounted Attenuator	CD		100	100
656.50	Baled Hay, in place	EA		20	20
656.60	Temporary Berms	LF		1,100	1,100
656.62	Temporary Slope Drains	LF		340	340
656.632	30 inch Temporary Silt Fence	LF		1,650	1,650
659.10	Mobilization	LS		1	1

COMMON EXCAVATION FOR ESTIMATE

COMMON EXCAVATION (FROM CROSS SECTIONS)	225	
GRUBBING IN FILL	143	
PAVEMENT SALVAGE IN FILL	80	
TOTAL COMMON EXCAVATION (for estimate)		448

FILL FOR BORROW CALCULATIONS

COMMON FILL (FROM CROSS SECTIONS)	3,900	
GRUBBING IN FILL	143	
PAVEMENT SALVAGE IN FILL	80	
TOTAL FILL		4,123

AVAILABLE COMMON EXCAVATION FOR BORROW CALCULATIONS

(1) TOTAL COMMON EXCAVATION		448
DEDUCTIONS:		
GRUBBING IN CUT	71	
GRUBBING IN FILL	143	
PAVEMENT SALVAGE (CUT & FILL)	180	
(2) TOTAL DEDUCTIONS		394
TOTAL AVAILABLE COMMON EXCAVATION (1) MINUS (2) UNDERDRAIN ONLY)		54
TOTAL AVAILABLE NON-ROCK EXCAVATION		54

COMPUTATION FOR COMMON BORROW FOR ESTIMATE

(3)TOTAL FILL					4,123
TOTAL AVAIL. NON-ROCK EXCAV.	54	x 0.90 =	49		
(4)TOTAL AVAILABLE EXCAVATION				=	49
BORROW NEEDED = TOTAL FILL MINUS TOTAL AVAILABLE EXCAVATION					4,074

Date:11/10/2016

Filename: 002_Estimated Quantities.dgn

Scale:

No.	Revision	By	Date

Designed by:

HNTB

CONSULTANT PROJECT MANAGER: Dale A. Mitchell, P.E.

	By	Date		By	Date
Designed	LZD	11/16	Checked	RWH	11/16
Drawn	SLR	11/16	In Charge of	RAL	11/16

HNTB CORPORATION
340 County Road, Suite 6-C
Westbrook, ME 04092
TEL (207) 774-5155
FAX (207) 228-0909

MAINE TURNPIKE

THE GOLD STAR MEMORIAL HIGHWAY

MTA PROJECT MANAGER: Ralph C. Norwood IV, P.E., P.T.O.E.

BRIDGE REPLACEMENT
MAXWELL ROAD UNDERPASS

ESTIMATED QUANTITIES AND EARTHWORK SUMMARY

SHEET NUMBER: ES-01

CONTRACT:2017.03

GENERAL

1. ALL DETAILS SHALL BE IN CONFORMANCE WITH MAINE DEPARTMENT OF TRANSPORTATION (MDOT) STANDARD DETAILS HIGHWAYS AND BRIDGES LATEST REVISION AND MDOT BEST MANAGEMENT PRACTICES FOR EROSION AND SEDIMENT CONTROL LATEST REVISION UNLESS OTHERWISE INCLUDED IN THESE PLANS.

2. CHAIN LINK FENCE GATES SHALL BE 4' WIDE SINGLE GATES. A GATE SHALL BE LOCATED ON EACH SIDE OF THE TURNPIKE ROADWAY. EXACT LOCATION OF THE GATE SHALL BE DETERMINED IN THE FIELD BY THE RESIDENT.

3. CONNECTIONS FOR EXISTING FENCE TO PROPOSED FENCE SHALL BE INCIDENTAL TO THE PROPOSED FENCE ITEMS.

4. EXISTING ROW FENCE WITHIN THE LIMITS OF WORK, AS SHOWN ON THE PLANS OR AS DIRECTED BY THE RESIDENT, SHALL BE REMOVED AND DISPOSED. THIS WORK SHALL BE INCIDENTAL TO SECTION 607.

5. CONTRACTOR IS REQUIRED TO MAINTAIN ACCESS TO ALL DRIVEWAYS AND SIDE ROADS DURING CONSTRUCTION UNLESS OTHERWISE SHOWN ON THE PLANS.

6. THE CONTRACTOR SHALL SUBMIT PROPOSED STAGING AREA(S) AND FIELD TRAILER LOCATION TO THE RESIDENT FOR APPROVAL PRIOR TO STARTING WORK.

7. THE CONTRACTOR IS REQUIRED TO CALL DIG SAFE AT 1-888-344-7233 AT LEAST 72 HOURS PRIOR TO START OF WORK.

8. THE CONTRACTOR SHALL NOTIFY THE RESIDENT 10 DAYS PRIOR TO CONSTRUCTION SO THE RESIDENT CAN ARRANGE FOR MAINE TURNPIKE UNDERGROUND UTILITY LOCATION. ALL PROPOSED SIGN LOCATIONS AND EXCAVATION LOCATIONS SHALL BE MARKED AT THE NOTIFICATION TIME. EXCAVATING WILL NOT BE PERMITTED UNTIL THE AUTHORITY HAS LOCATED AND MARKED ITS' UNDERGROUND UTILITIES, OR NOTIFIED THE RESIDENT THERE ARE NO UNDERGROUND UTILITIES IN THE MARKED AREAS. THE CONTRACTOR IS RESPONSIBLE FOR MAINTAINING THE UTILITY LOCATIONS.

9. GRANITE MONUMENTS CALLED TO BE REMOVED AND STACKED SHALL BE SECURELY STORED BY THE CONTRACTOR UNTIL THE END OF THE PROJECT WHEN MTA WILL REINSTALL. REMOVE AND STACK GRANITE MONUMENTS SHALL BE INCIDENTAL TO THE CONTRACT.

10. PROJECT BENCHMARKS:

A. HORIZONTAL- THE HORIZONTAL CONTROL UTILIZED FOR THIS SURVEY ARE AS FOLLOWS:

#1- PK NAIL SET IN EDGE OF PAVEMENT ON EASTERLY SIDE OF MAXWELL ROAD AND THE SOUTHERLY SIDE OF TERRY CIRCLE. PK IS LOCATED AT APPROXIMATELY STATION 26+00 29' RIGHT. THE COORDINATES FOR #1 ARE:
NORTHING-470260.33
EASTING-299132 3.13
ELEV.-352.02 (SEE NOTE 11)

#2- PK NAIL SET IN EDGE OF PAVEMENT ON EASTERLY SIDE OF MAXWELL ROAD AT APPROXIMATELY STATION 27+72 6'RIGHT. THE COORDINATES FOR #2 ARE:
NORTHING-470438.52
EASTING-299133 4.93
ELEV.-360.78 (SEE NOTE 11)

#3- PK NAIL SET IN EDGE OF PAVEMENT ON EASTERLY SIDE OF MAXWELL ROAD AT APPROXIMATELY STATION 31+03 6' RIGHT. THE COORDINATES FOR #3 ARE:
NORTHING-470770.71
EASTING-299133 4.36
ELEV.-363.28 (SEE NOTE 11)

#4- PK NAIL SET IN EDGE OF PAVEMENT ON WESTERLY SIDE OF MAXWELL ROAD AT APPROXIMATELY STATION 33+85 8'LEFT. THE COORDINATES FOR #4 ARE:
NORTHING-471050.04
EASTING-299136 1.71
ELEV.-350.72 (SEE NOTE 11)

B. VERTICAL- THE VERTICAL CONTROL UTILIZED FOR THIS SURVEY ARE AS FOLLOWS.

BM #1- PK NAIL SET 1'± ABOVE GRADE IN UTILITY POLE #13 AT APPROXIMATELY STATION 25+85 30' RIGHT
ELEVATION 350.95

BM #2- PK NAIL SET 1'± ABOVE GRADE IN UTILITY POLE #17 AT APPROXIMATELY STATION 33+85 20' LEFT
ELEVATION 349.44

11. ELEVATIONS REPORTED IN NOTE 10A ABOVE ARE BASED UPON DIFFERENTIAL LEVELING AS PERFORMED IN OCTOBER 2016. DUE TO FROST AND THE POSSIBLE VERTICAL SHIFT OF PAVEMENT ELEVATIONS SHALL BE VERIFIED PRIOR TO CONSTRUCTION UTILIZING THE 2 VERTICAL CONTROL POINTS AS REPORTED IN NOTE 10B.

EROSION CONTROL

1. THE ANTICIPATED EROSION CONTROL DEVICES ARE SHOWN ON THE PLANS. THE CONTRACTOR SHALL PROPOSE ACTUAL TYPE AND LOCATION OF DEVICES FOR APPROVAL BY THE RESIDENT. ADDITIONAL MEASURES MAY BE PROPOSED BY THE CONTRACTOR DUE TO SITE OR WEATHER CONDITIONS. THE RESIDENT MAY DIRECT THE CONTRACTOR TO IMPLEMENT ADDITIONAL MEASURES. ANY ADDITIONAL MEASURES APPROVED OR DIRECTED BY THE RESIDENT WILL BE MEASURED FOR PAYMENT.

2. 4" LOAM HAS BEEN ESTIMATED FOR 100% OF THE DISTURBED SLOPE AREA UNLESS OTHERWISE SPECIFIED ON THE PLANS. ACTUAL PLACEMENT OF THE LOAM SHALL BE AS DESIGNATED BY THE RESIDENT.

3. ALL TEMPORARY AND PERMANENT EROSION CONTROL DEVICES SHALL BE INSTALLED IN ACCORDANCE WITH THE MAINE DEPARTMENT OF TRANSPORTATION BEST MANAGEMENT PRACTICES.

4. TEMPORARY STONE CHECK DAMS SHALL BE INSTALLED IN ACCORDANCE WITH THE MDOT BEST MANAGEMENT PRACTICES.

5. TEMPORARY BERMS AND TEMPORARY SLOPE DRAINS ARE ANTICIPATED AT ALL STONE DOWNSPOUT LOCATIONS AND TOP OF EMBANKMENTS WHILE GROWTH IS BEING ESTABLISHED ON SIDE SLOPES.

6. TEMPORARY EROSION CONTROL BLANKET, ITEM 613.319 SHALL BE INSTALLED IN ALL DITCHES AND SLOPES 2:1 AND STEEPER FROM TOP TO TOE OF SLOPE. LOAM AND SEED SHALL BE PLACED PRIOR TO THE INSTALLATION OF THE EROSION CONTROL BLANKET. LIMITS OF THE EROSION CONTROL BLANKET IN DITCHES SHALL BE 6' WIDE UNLESS OTHERWISE SPECIFIED ON THE PLANS OR AS DESIGNATED BY THE RESIDENT.

EARTHWORK

1. ALL CLEARING SHALL BE COMPLETED BEFORE MAY 31, 2017. CLEARING LIMITS SHALL BE 5' BEYOND AND PARALLEL TO THE CONSTRUCTION SLOPE LINES OR AS SHOWN ON THE PLANS UNLESS OTHERWISE AUTHORIZED BY THE RESIDENT. THE ACTUAL CLEARING LINES SHALL BE ESTABLISHED IN THE FIELD BY THE CONTRACTOR AND SHALL BE APPROVED BY THE RESIDENT PRIOR TO ANY CLEARING TAKING PLACE.

2. INDIVIDUAL TREES WITHIN THE SLOPE LIMIT LINES OR CALLED TO BE REMOVED ON THE PLANS, SHALL BE REMOVED AND DISPOSED. THIS WORK SHALL BE INCIDENTAL TO THE CONTRACT.

3. THE NORMAL GRUBBING WIDTH IN FILLS SHALL BE VARIABLE LEFT OR RIGHT WHEN SUBGRADE IS LESS THAN 5' ABOVE OLD GROUND. THE GRUBBING DEPTH HAS BEEN ESTIMATED AS 6" IN FIELD AREAS AND 12" IN WOODED AREAS.

4. WASTE MATERIALS SHALL BE DISPOSED OF OFF THE PROJECT SITE, IN ACCORDANCE WITH ALL ENVIRONMENTAL REGULATIONS.

5. REMOVAL OF EXISTING PAVEMENT, WITHIN THE AREAS OF FULL DEPTH PAVEMENT AND FULL DEPTH CONSTRUCTION, SHALL BE PAID FOR AS COMMON EXCAVATION. EXISTING PAVEMENT THICKNESS HAS BEEN ESTIMATED TO BE 6".

GUARDRAIL

1. STEEL CABLE GUARDRAIL EXISTS ON THE PROJECT SITE. THE GUARDRAIL IS MOSTLY LAYING ON THE GROUND. THE CONTRACTOR SHALL REMOVE AND DISPOSE OF THE EXISTING STEEL CABLE GUARDRAIL. PAYMENT SHALL BE INCIDENTAL TO SECTION 606 GUARDRAIL ITEMS.

2. AT THE END OF EACH WORK DAY, THE CONTRACTOR IS REQUIRED TO HAVE AN APPROVED CRASHWORTHY END TREATMENT ON ALL GUARDRAIL WITHIN ALL WORK AREAS THAT ARE ACCESSIBLE TO TRAFFIC.

3. SEE DOWNSPOUT DETAILS, SHEET MD-03 FOR THE SHOULDER PAVEMENT LIMITS FROM THE BRIDGE JOINT TO THE STONE DOWNSPOUT.

4. PROPOSED MAILBOX POSTS SHALL BE A 4X4 WOOD POST SET 45" HIGH WITH A 2 FOOT EMBEDMENT. OFFSET SHALL BE A MINIMUM OF 1 FOOT BEYOND THE EDGE OF SHOULDER OR SIMILAR TO EXISTING, WHICHEVER IS GREATER. PAYMENT SHALL BE UNDER ITEM 606.47 SINGLE WOOD POST.

5. THE CONTRACTOR WILL BE RESPONSIBLE FOR MAINTAINING ALL EXISTING MAILBOXES TO ENSURE THAT THE MAIL WILL BE DELIVERABLE. THIS WORK SHALL BE INCIDENTAL TO THE CONTRACT.

6. ALL EXISTING DELINEATOR POSTS SHALL BE REMOVED AND RESET UPON COMPLETION OF THE CONTRACT. PAYMENT FOR RESETTING DELINEATOR POSTS WILL BE MADE UNDER ITEM 606.3561. DELINEATOR POSTS SUPPLIED BY THE CONTRACTOR SHALL BE PAID FOR UNDER ITEM 606.356 AS UNDERDRAIN DELINEATOR POSTS.

BRIDGE SIGNS

1. BRIDGE NO. SIGNS SHALL BE SUPPLIED BY THE MAINE TURNPIKE AUTHORITY. THE CONTRACTOR SHALL SUPPLY THE U-CHANNEL POST AND SHALL INSTALL THE SIGNS. PAYMENT SHALL BE UNDER ITEM 645.272.

2. BRIDGE NAME SIGNS AND BRACKETS SHALL BE SUPPLIED BY THE MAINE TURNPIKE AUTHORITY. THE CONTRACTOR SHALL INSTALL THE SIGNS ON THE NORTHBOUND AND SOUTHBOUND FASCIA BEAMS. PAYMENT SHALL BE INCIDENTAL TO ITEM 504.71 AND SHALL FOLLOW THE BELOW REQUIREMENTS:

A. LOCATION OF SIGN SUPPORT SHALL BE FIELD LOCATED BY THE RESIDENT.

B. BOLTS SHALL BE 1/2" DIAMETER A325 TYPE 3.

C. SIGN BRACKETS SHALL BE LOCATED WITHIN TWO FEET OF SIGN ENDS. BRACKET SPACING SHALL BE FIVE FEET ON CENTER MAXIMUM.

DRAINAGE

1. INLETS AND OUTLETS OF ALL CULVERTS SHALL BE RIPRAPPED UNLESS OTHERWISE NOTED ON THE PLANS OR DIRECTED BY THE RESIDENT.

LOCAL ROAD

1. PAVED ENTRANCES SHALL BE CONSTRUCTED WITH:
2" HOT MIX ASPHALT, 12.5 MM
12" AGGREGATE SUBBASE COURSE GRAVEL.

2. UNPAVED ENTRANCES SHALL BE CONSTRUCTED WITH:
14" AGGREGATE SUBBASE COURSE GRAVEL.

3. A 3' PAVED LIP SHALL BE PLACED AT ALL GRAVEL ENTRANCES EXCEPT WOODS AND FIELD ENTRANCES UNLESS OTHERWISE DIRECTED BY THE RESIDENT.

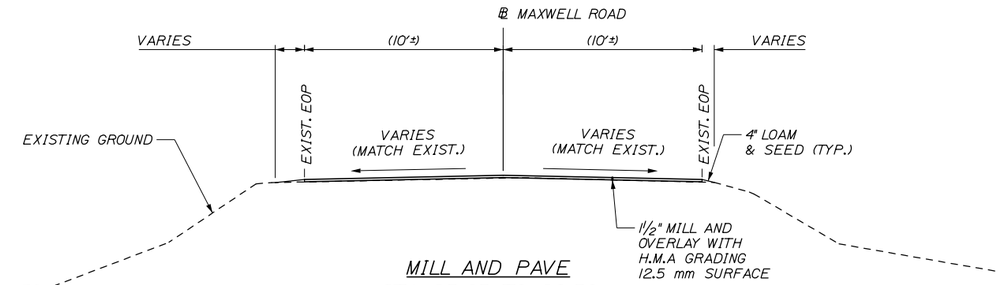

MILL AND PAVE
STA. 25+65 TO 26+50
¼" = 1'-0"

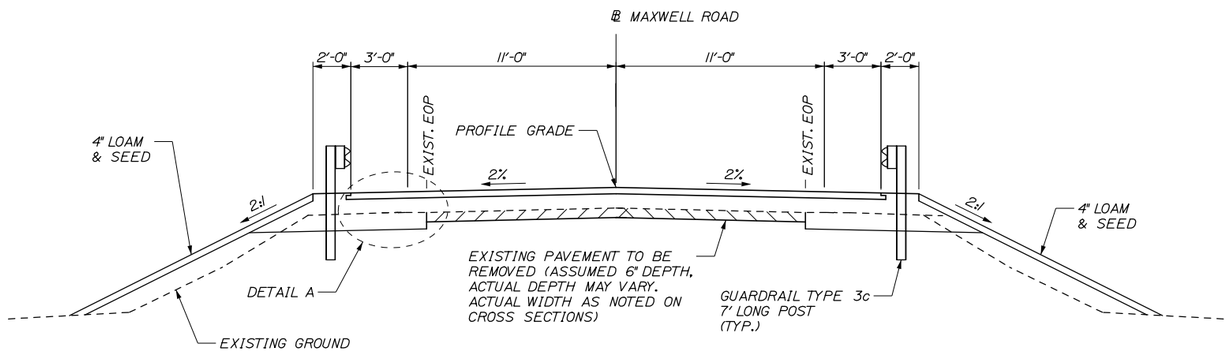

FULL DEPTH PAVEMENT
STA. 26+50 TO 27+50 AND
STA. 32+50 TO 33+75
¼" = 1'-0"

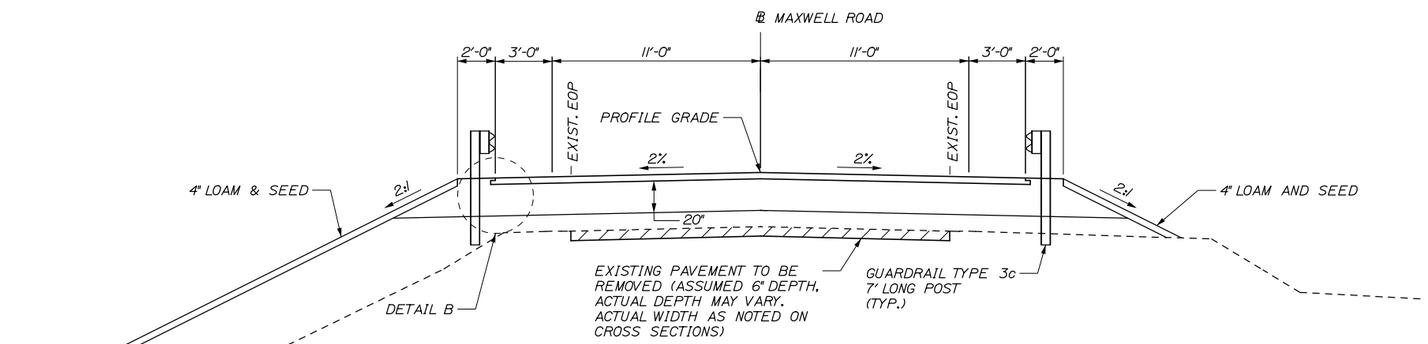

FULL DEPTH CONSTRUCTION
STA. 27+50 TO 28+77 AND
STA. 30+83 TO 32+50
¼" = 1'-0"

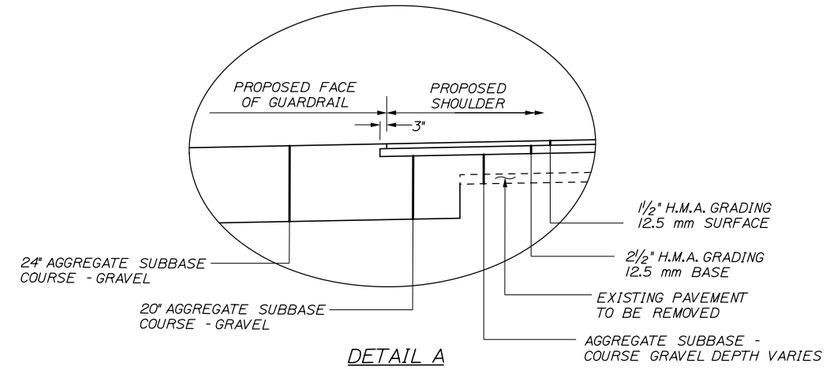

DETAIL A
N.T.S.

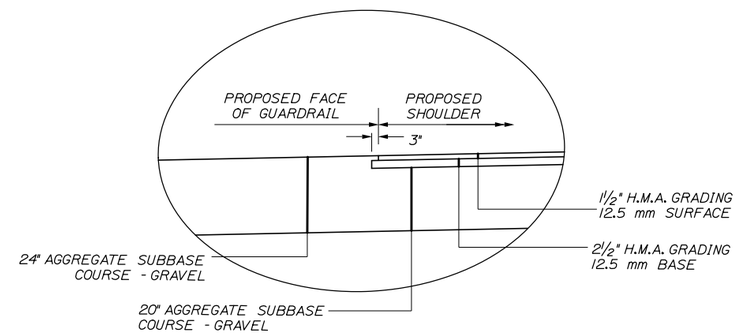

DETAIL B
N.T.S.

NOTES

1. THE PAVEMENT, BASE AND SUBBASE DEPTHS, AS SHOWN ON THE PLANS, ARE INTENDED TO BE NOMINAL.
2. CROWNS FOR ALL COURSES OF SUBBASE AND PAVEMENT SHALL BE STRAIGHT.
3. ALL NECESSARY PAVEMENT CUTTING SHALL BE SAWCUT AND DONE IN SUCH A MANNER AS TO LEAVE A CLEAN, VERTICAL FACE.
4. BITUMINOUS TACK COAT IS REQUIRED BETWEEN ALL LIFTS OF PAVEMENT AND ON ALL EXISTING PAVED OR MILLED SURFACES PRIOR TO PLACING PROPOSED PAVEMENT OR AS DIRECTED BY THE RESIDENT.

Date:11/10/2016

Filename: 004_TypicalSection.dgn

Scale: AS NOTED

No.	Revision	By	Date

Designed by: HNTB

CONSULTANT PROJECT MANAGER: Dale. A. Mitchell, P.E.

	By	Date		By	Date
Designed	LZD	11/16	Checked	RWH	11/16
Drawn	SLR	11/16	In Charge of	RAL	11/16

HNTB CORPORATION
340 County Road, Suite 6-C
Westbrook, ME 04092
TEL (207) 774-5155
FAX (207) 228-0909

MAINE TURNPIKE

THE GOLD STAR MEMORIAL HIGHWAY

MTA PROJECT MANAGER: Ralph C. Norwood, IV, P.E., P.T.O.E.

BRIDGE REPLACEMENT
MAXWELL ROAD UNDERPASS

TYPICAL SECTIONS

SHEET NUMBER: TYP-01

CONTRACT:2017.03

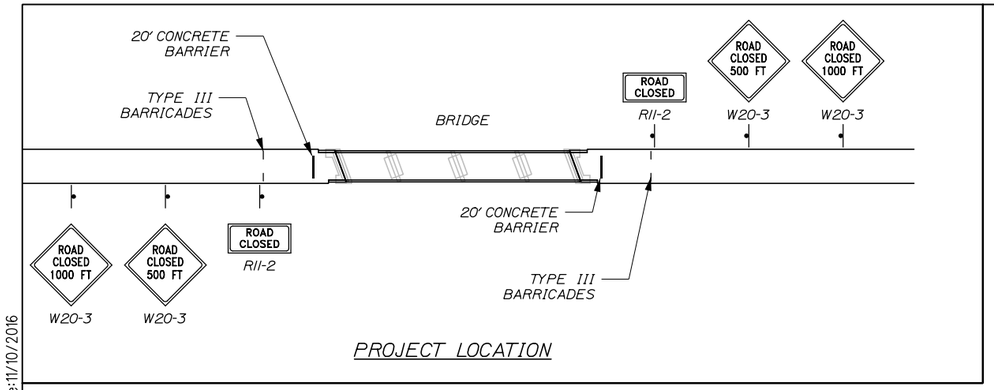

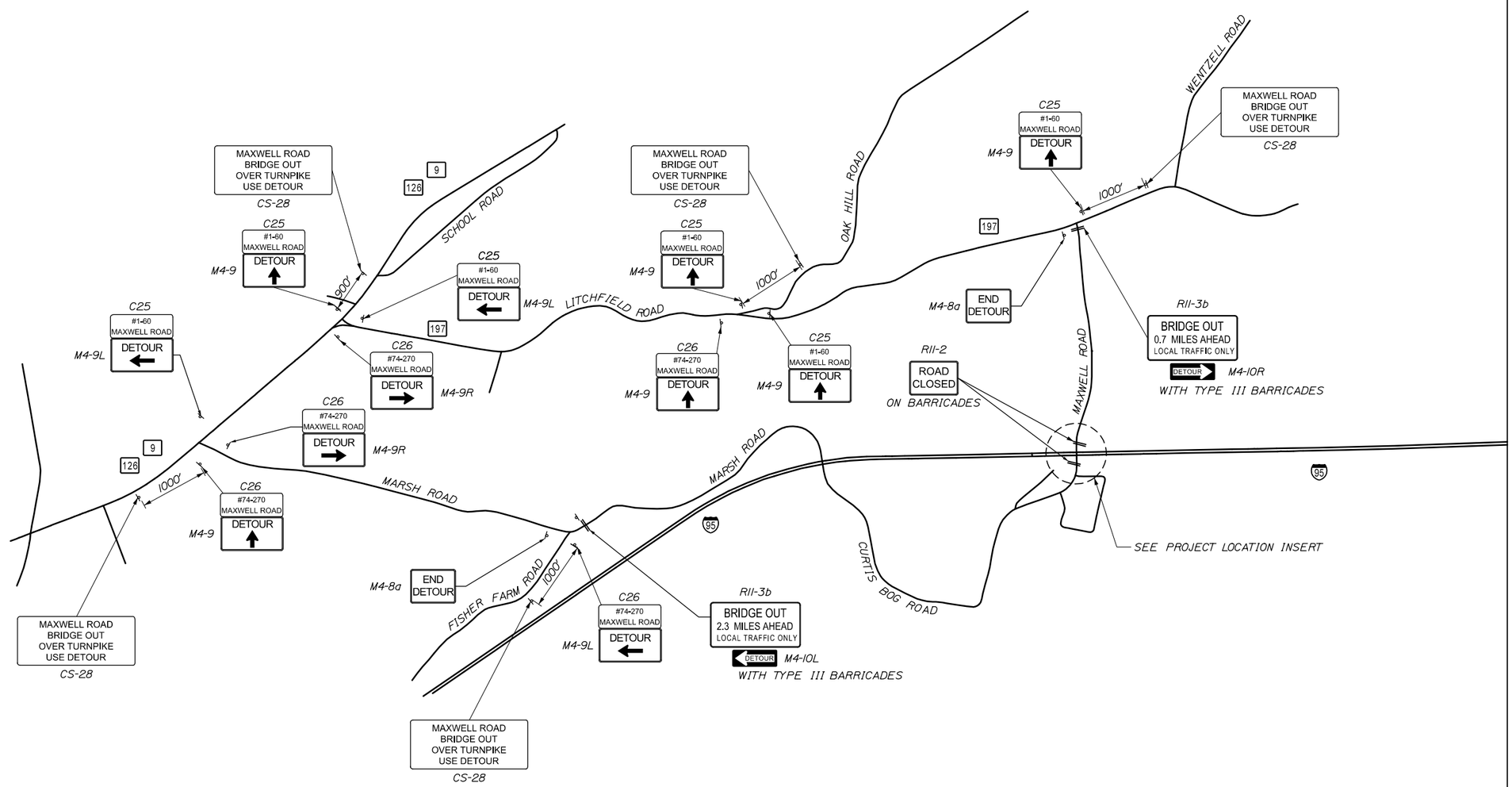

Date:11/10/2016

Filename: 005_Detour Plan.dgn

Scale:

No.	Revision	By	Date

Designed by:

HNTB

CONSULTANT PROJECT MANAGER: Dale. A. Mitchell, P.E.

	By	Date		By	Date
Designed	LZD	11/16	Checked	RWH	11/16
Drawn	SLR	11/16	In Charge of	RAL	11/16

HNTB CORPORATION
340 County Road, Suite 6-C
Westbrook, ME 04092
TEL (207) 774-5155
FAX (207) 228-0909

MAINE TURNPIKE

THE GOLD STAR MEMORIAL HIGHWAY

MTA PROJECT MANAGER: Ralph C. Norwood, IV, P.E., P.T.O.E.

BRIDGE REPLACEMENT MAXWELL ROAD UNDERPASS

MAINTENANCE OF TRAFFIC DETOUR PLAN

SHEET NUMBER: MOT-01

CONTRACT:2017.03

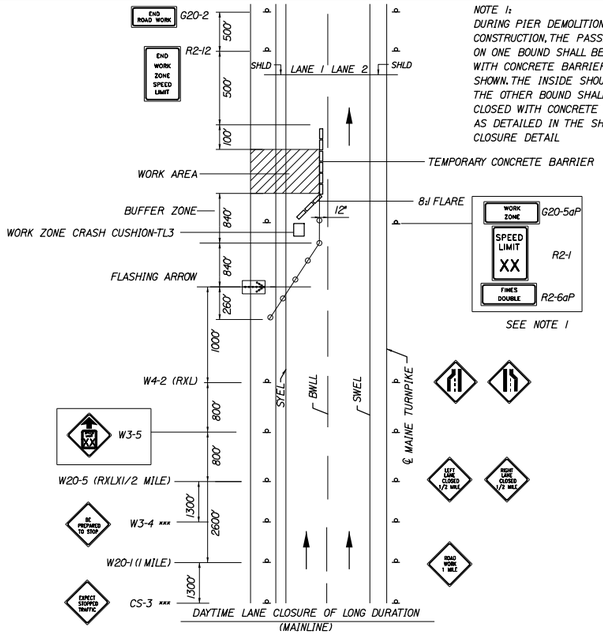

NOTE 1:
DURING PIER DEMOLITION AND CONSTRUCTION, THE PASSING LANE ON ONE BOUND SHALL BE CLOSED WITH CONCRETE BARRIER AS SHOWN. THE INSIDE SHOULDER ON THE OTHER BOUND SHALL BE CLOSED WITH CONCRETE BARRIER AS DETAILED IN THE SHOULDER CLOSURE DETAIL

SINGLE LANE CLOSURE WITH CONCRETE BARRIER

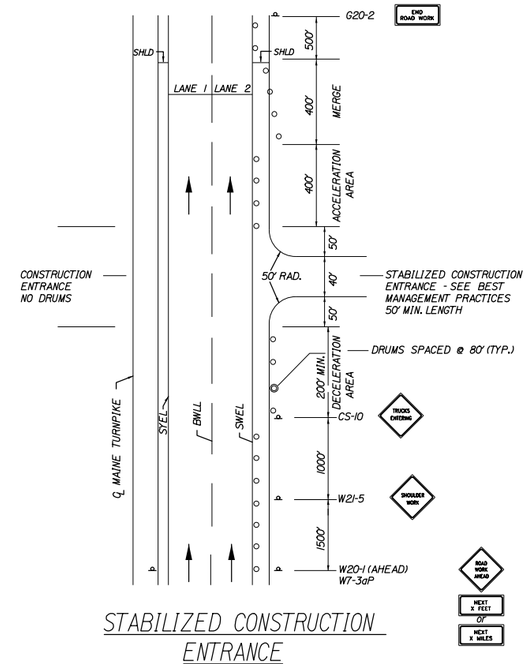

STABILIZED CONSTRUCTION ENTRANCE

1. SIGN G20-2 IS NOT REQUIRED IF ENTRANCE IS WITHIN THE WORK ZONE.

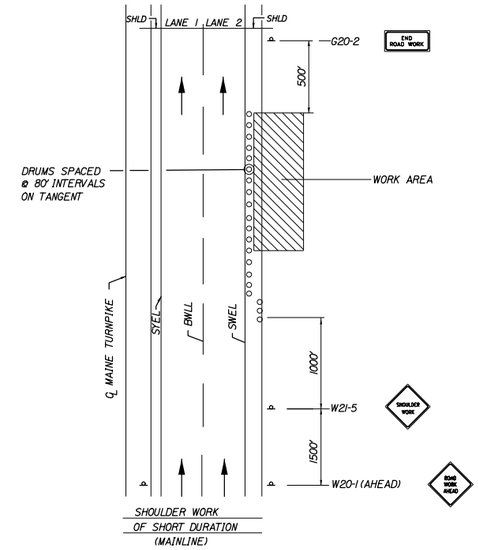

SHOULDER WORK

1. THE W20-1 AND G20-2 SIGNS ARE NOT REQUIRED IF THE SHOULDER CLOSURE IS WITHIN A PREVIOUSLY ESTABLISHED WORK ZONE.

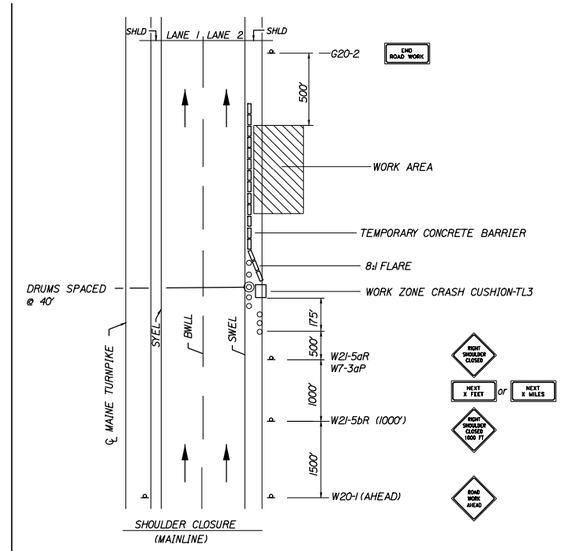

SHOULDER CLOSURE

1. THE W20-1 AND G20-2 SIGNS ARE NOT REQUIRED IF THE SHOULDER CLOSURE IS WITHIN A PREVIOUSLY ESTABLISHED WORK ZONE.

2. ONLY ONE SHOULDER CLOSURE PERMITTED PER BOUND AT ONE TIME.

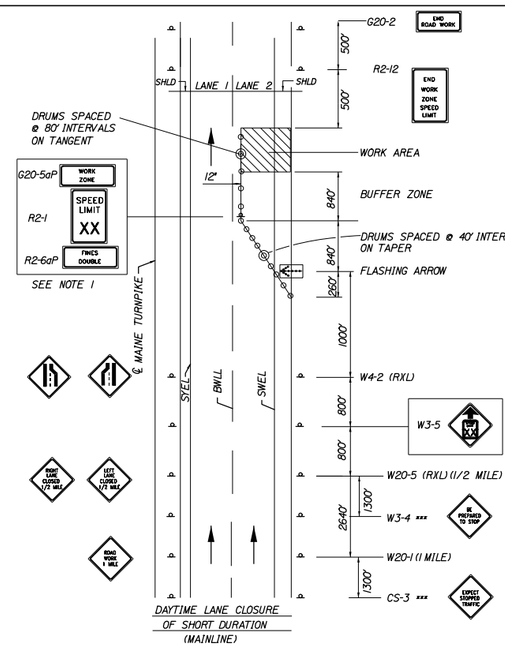

SINGLE LANE CLOSURE SIGNS ON EASELS

1. FOR EASEL SET UP ONLY. THIS SIGN IS NOT BRACKETED. ONE SIGN ASSEMBLY IS PLACED AT THE END OF THE TAPER .

NOTE 1:
FOR POST MOUNTED SIGN SETUP UNCOVER SIGNS ADJACENT TO OPEN LANE FOR SHORT TERM LANE CLOSURE (LESS THAN 24 HOURS); UNCOVER BOTH SIGNS FOR PERMANENT LANE CLOSURE (GREATER THAN 24 HOURS).

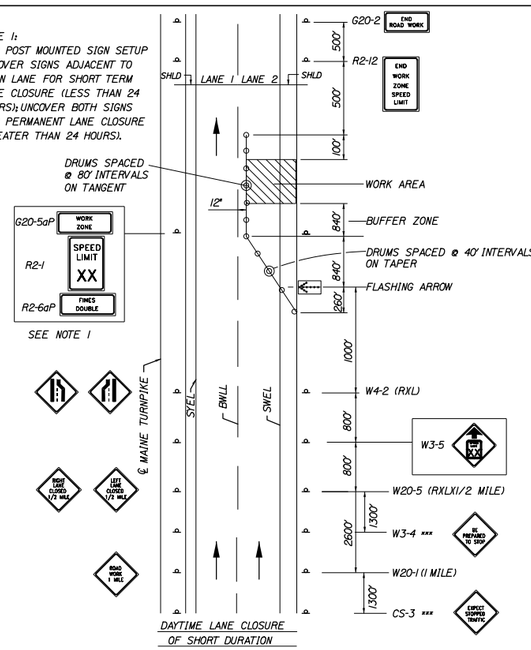

SINGLE LANE CLOSURE - POST MOUNTED SIGN SETUP

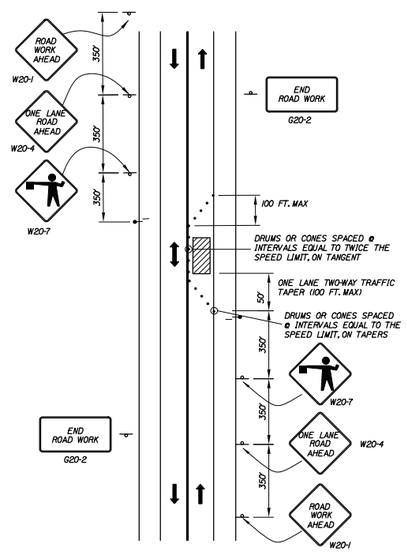

LOCAL ROAD SINGLE LANE CLOSURE

NOTES:
1. ROAD WORK AHEAD & END ROAD WORK SIGNS MAY BE OMITTED FOR SHORT DURATION OPERATIONS (LESS THAN 1 HOUR).

2. FLAGGERS SHALL BE LOCATED SO THEY ARE CLEARLY VISIBLE TO APPROACHING DRIVERS.

3. SIGN SPACING ASSUMES LOCAL ROAD SPEED IS 40 MPH OR LESS.

GENERAL MAINTENANCE OF TRAFFIC NOTES:

1. ALL PAVMENT STRIPING & SIGNING SHALL BE IN ACCORDANCE WITH THE "MANUAL ON UNIFORM TRAFFIC CONTROL DEVICES", U.S.D.O.T., F.H.W.A., LATEST EDITION.

2. THESE PLANS SHOW THE GENERAL CONDITION FOR TURNPIKE MAINLINE TRAFFIC CONTROL. DURING CONSTRUCTION, SLIGHT MODIFICATIONS IN CONSTRUCTION PROCEDURE MAY OCCUR AND MAY REQUIRE SOME MINOR ADJUSTMENTS TO BE MADE IN THE FIELD. ALL PROCEDURES MUST BE APPROVED BY THE RESIDENT.

3. THE CONTRACTOR SHALL REMOVE ALL PAVEMENT MARKINGS THAT CONFLICT WITH PROPOSED PAVEMENT MARKINGS IN ACCORDANCE WITH THE SPECIFICATIONS AND MUTCD. PAYMENT SHALL BE MADE UNDER ITEM 627.77 - REMOVING PAVEMENT MARKINGS.

4. EXPOSED BARRIER ENDS SHALL BE PROTECTED BY A WORK ZONE CRASH CUSHION. PAYMENT WILL BE UNDER ITEM 527.341 - WORK ZONE CRASH CUSHION - TL-3.

5. GEOMETRIC INFORMATION FOR TRAFFIC PHASES SHOWN ON THE PLANS WILL BE SUPPLIED TO THE CONTRACTOR AFTER AWARD.

ABBREVIATIONS FOR ALL M.O.T. PLANS

BWLL = BROKEN WHITE LANE LINE
SWLL = SOLID WHITE LANE LINE
SYLL = SOLID YELLOW LANE LINE
TBWLL - TEMPORARY BROKEN WHITE LANE LINE
TSWLL = TEMPORARY SOLID WHITE LANE LINE
TSYLL = TEMPORARY SOLID YELLOW LANE LINE

Date:11/10/2016

Filename: 006_MOT Details.dgn

Scale:

No.	Revision	By	Date

Designed by:

HNTB

CONSULTANT PROJECT MANAGER: Dale A. Mitchell, P.E.

	By	Date		By	Date
Designed	LZD	11/16	Checked	RWH	11/16
Drawn	SLR	11/16	In Charge of	RAL	11/16

HNTB CORPORATION
340 County Road, Suite 6-C
Westbrook, ME 04092
TEL (207) 774-5155
FAX (207) 228-0909

MAINE TURNPIKE

THE GOLD STAR MEMORIAL HIGHWAY

MTA PROJECT MANAGER: Ralph C. Norwood IV, P.E., P.T.O.E.

BRIDGE REPLACEMENT
MAXWELL ROAD UNDERPASS

MAINTENANCE OF TRAFFIC

SHEET NUMBER: MOT-02

CONTRACT:2017.03

CONSTRUCTION SIGN SUMMARY

IDENTIFICATION NUMBER	SIZE OF SIGN WIDTH	SIZE OF SIGN HEIGHT	TEXT	TEXT DIMENSIONS (INCHES) LETTER HEIGHT	TEXT DIMENSIONS (INCHES) VERTICAL SPACING	TEXT DIMENSIONS (INCHES) ARROW RTE. MKR.	NUMBER OF SIGNS REQUIRED	COLOR BACK-GROUND	COLOR LEGEND BORDER	BORDER RADIUS	AREA IN SQUARE FEET	NOTES
CS-3	48"	48"	EXPECT STOPPED TRAFFIC	6" 6" 6"	4" 4"		4	ORANGE	BLACK		16.00 (64)	
CS-10	48"	48"	TRUCKS ENTERING	6" 6"	4"		2				16.00 (32)	
CS-25	30"	18"	* #1-60 MAXWELL ROAD	4"D 4"D	3"		6				2.50 (12.5)	
CS-26	30"	18"	* #74-270 MAXWELL ROAD	4"D 4"D	3"		5				2.50 (15.0)	
CS-28	60"	36"	MAXWELL ROAD BRIDGE OUT OVER TURNPIKE USE DETOUR	5"C 5"C 5"C 5"C	4" 4" 4"		5				15.00 (75)	
G20-2	48" 36"	24" 18"	END ROAD WORK	TEXT DIMENSIONS SHALL CONFORM TO "STANDARD HIGHWAY SIGNS" - 2004			4" 2"				8.00 (32) 4.5 (9)	
G20-5aP	48"	24"	WORK ZONE				4				8.00 (32)	
M4-8a	24"	18"	END DETOUR				2				3.00 (6)	

HOUSE NUMBERS TO BE CONFIRMED BY CONTRACTOR

IDENTIFICATION NUMBER	SIZE OF SIGN WIDTH	SIZE OF SIGN HEIGHT	TEXT	TEXT DIMENSIONS (INCHES) LETTER HEIGHT	TEXT DIMENSIONS (INCHES) VERTICAL SPACING	TEXT DIMENSIONS (INCHES) ARROW RTE. MKR.	NUMBER OF SIGNS REQUIRED	COLOR BACK-GROUND	COLOR LEGEND BORDER	BORDER RADIUS	AREA IN SQUARE FEET	NOTES
M4-9	30"	24"	DETOUR ↑	TEXT DIMENSIONS SHALL CONFORM TO "STANDARD HIGHWAY SIGNS" - 2004			6	ORANGE	BLACK		5.00 (30)	
M4-9L	30"	24"	DETOUR ←				3				5.00 (15)	
M4-9R	30"	24"	DETOUR →				2				5.00 (10)	
M4-10R M4-10L	48"	18"	DETOUR R-SHOWN, L-OPPOSITE				1 1				6.00 (6) (6)	
R2-1	48"	60"	SPEED LIMIT 50				4	WHITE	BLACK		20.00 (80)	
R2-6aP	48"	24"	FINES DOUBLE				4				8.00 (32)	
R2-12	36"	54"	END WORK ZONE SPEED LIMIT				4				13.50 (54)	
R11-2	48"	30"	ROAD CLOSED				2				10.00 (20)	
R11-3b (0.7) (2.3)	60"	30"	BRIDGE OUT XX MILES AHEAD LOCAL TRAFFIC ONLY				1 1				12.50 (12.5) (12.5)	

Date:11/10/2016

Filename: 007_MOT Sign Summary 01.dgn

Scale:

No.	Revision	By	Date

Designed by:

HNTB

CONSULTANT PROJECT MANAGER: Dale A. Mitchell, P.E.

	By	Date		By	Date
Designed	LZD	11/16	Checked	RWH	11/16
Drawn	SLR	11/16	In Charge of	RAL	11/16

HNTB CORPORATION
340 County Road, Suite 6-C
Westbrook, ME 04092
TEL (207) 774-5155
FAX (207) 228-0909

MAINE TURNPIKE

THE GOLD STAR MEMORIAL HIGHWAY

MTA PROJECT MANAGER: Ralph C. Norwood IV, P.E., P.T.O.E.

BRIDGE REPLACEMENT
MAXWELL ROAD UNDERPASS

MAINTENANCE OF TRAFFIC

SHEET NUMBER: MOT-03

CONTRACT:2017.03

CONSTRUCTION SIGN SUMMARY (CONTINUED)

IDENTIFICATION NUMBER	SIZE OF SIGN WIDTH	SIZE OF SIGN HEIGHT	TEXT	TEXT DIMENSIONS (INCHES) LETTER HEIGHT	TEXT DIMENSIONS (INCHES) VERTICAL SPACING	TEXT DIMENSIONS (INCHES) ARROW RTE. MKR.	NUMBER OF SIGNS REQUIRED	COLOR BACK-GROUND	COLOR LEGEND BORDER	BORDER RADIUS	AREA IN SQUARE FEET	NOTES
W3-4	48"	48"	BE PREPARED TO STOP	TEXT DIMENSIONS SHALL CONFORM TO "STANDARD HIGHWAY SIGNS" - 2004			4	ORANGE	BLACK		16.00 (64)	
W3-5 (50)	48"	48"	SPEED LIMIT XX				4				16.00 (64)	
W4-2L	48"	48"					4				16.00 (64)	
W4-2R	48"	48"					4				16.00 (64)	
W7-3aP	36"	30"	NEXT X FEET				2				7.5 (15)	
W20-1	48"	48"	ROAD WORK 1 MILE				4				16.00 (64)	
W20-1	36" 48"	36" 48"	ROAD WORK AHEAD				2 4				9.00 (18) 16.00 (64)	
W20-3 (500 FT) (1000 FT)	36"	36"	ROAD CLOSED XXXX				2 2				9.00 (18) 9.00 (18)	

IDENTIFICATION NUMBER	SIZE OF SIGN WIDTH	SIZE OF SIGN HEIGHT	TEXT	TEXT DIMENSIONS (INCHES) LETTER HEIGHT	TEXT DIMENSIONS (INCHES) VERTICAL SPACING	TEXT DIMENSIONS (INCHES) ARROW RTE. MKR.	NUMBER OF SIGNS REQUIRED	COLOR BACK-GROUND	COLOR LEGEND BORDER	BORDER RADIUS	AREA IN SQUARE FEET	NOTES
W20-4	36"	36"	ONE LANE ROAD AHEAD	TEXT DIMENSIONS SHALL CONFORM TO "STANDARD HIGHWAY SIGNS" - 2004			2	ORANGE	BLACK		9.00 (18)	
W20-5L	48"	48"	LEFT LANE CLOSED 1/2 MILE				4				16.00 (64)	
W20-5R	48"	48"	RIGHT LANE CLOSED 1/2 MILE				4				16.00 (64)	
W20-7	36"	36"					2				9.00 (18)	
W21-5	48"	48"	SHOULDER WORK				2				16.00 (32)	
W21-5aR	48"	48"	RIGHT SHOULDER CLOSED				2				16.00 (32)	
W21-5bR	48"	48"	RIGHT SHOULDER CLOSED 1000 FT				2				16.00 (32)	

Date:11/10/2016

Filename: 008_MOT-Sign Summary 02.dgn

Scale:

No.	Revision	By	Date

Designed by:

HNTB

CONSULTANT PROJECT MANAGER: Dale A. Mitchell, P.E.

	By	Date		By	Date
Designed	LZD	11/16	Checked	RWH	11/16
Drawn	SLR	11/16	In Charge of	RAL	11/16

HNTB CORPORATION
340 County Road, Suite 6-C
Westbrook, ME 04092
TEL (207) 774-5155
FAX (207) 228-0909

MAINE TURNPIKE

THE GOLD STAR MEMORIAL HIGHWAY

MTA PROJECT MANAGER: Ralph C. Norwood IV, P.E., P.T.O.E.

BRIDGE REPLACEMENT
MAXWELL ROAD UNDERPASS

MAINTENANCE OF TRAFFIC

SHEET NUMBER: MOT-04

CONTRACT:2017.03

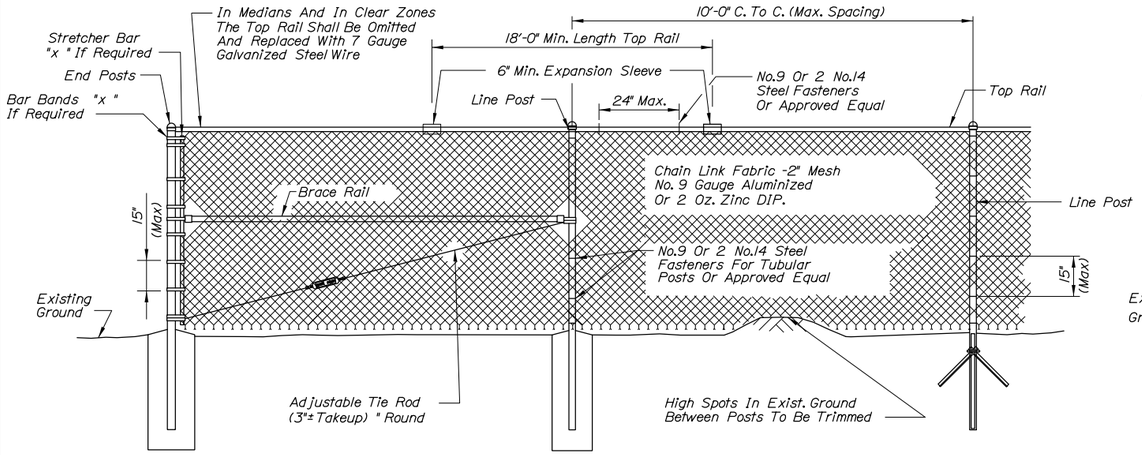

TYPICAL TYPE I END PANEL
N.T.S.

TYPICAL INTERMEDIATE PANEL
N.T.S.

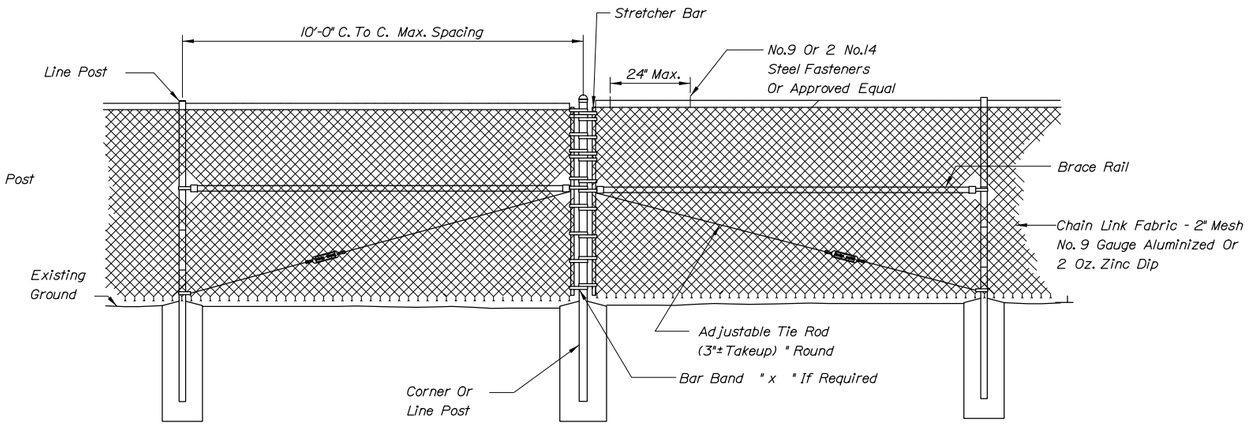

TYPICAL TYPE II BRACE PANEL
N.T.S.

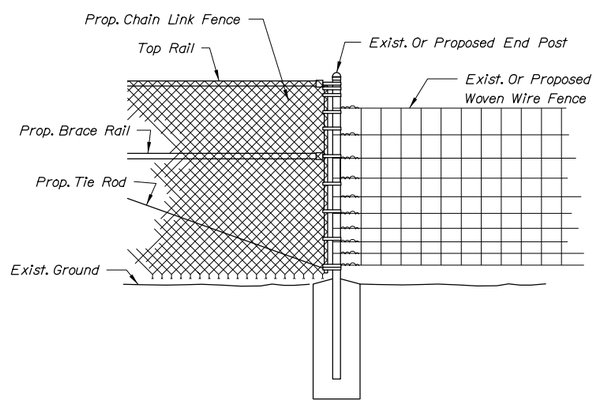

METHOD OF ATTACHING CHAIN LINK FENCE TO WOVEN WIRE FENCE
N.T.S.

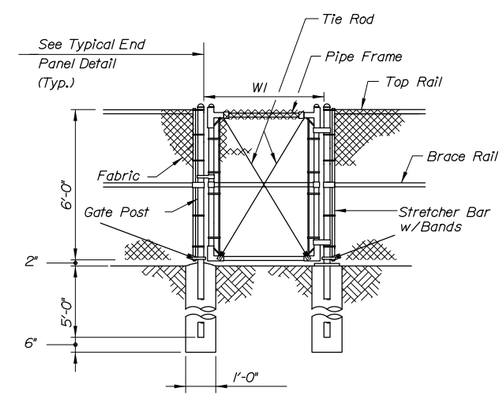

SINGLE GATE

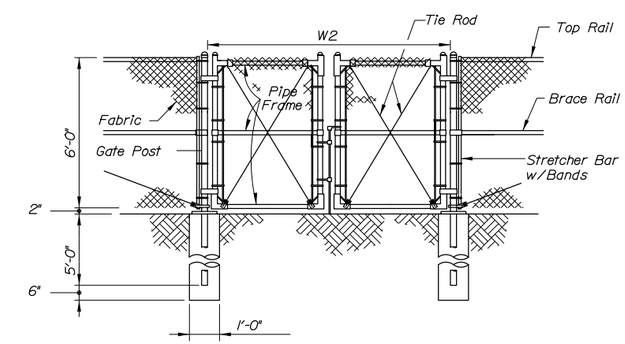

DOUBLE GATE

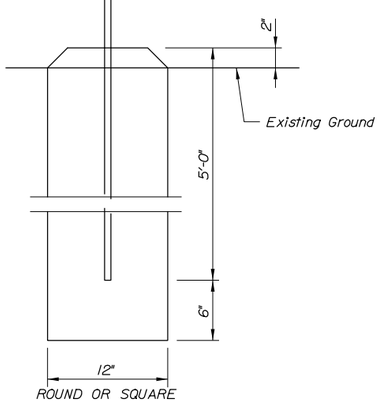

BRACE, GATE AND END POST BASE DETAIL
N.T.S.

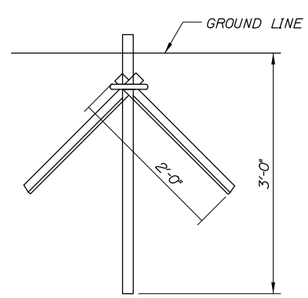

LINE POST DRIVE ANCHOR DETAIL
N.T.S.

Gate Width		Gate Post O.D.
W1	W2	
to 6'	to 12'	3"
6' to 12'	12' to 24'	4"
12' to 18'	24' to 36'	6"

BENDING MOMENTS BASED ON GRADE 1 (SCHEDULE 40 STEEL)

CHAIN LINK FENCE	SHAPE	NOMINAL SIZE (INCHES)	BENDING MOMENT* (LBS.-IN.)
END & CORNER POSTS	ø	2 I.D.	14,025
LINE POSTS	ø	1-1/2 I.D.	8,150
TOP & BRACE RAILS	ø	1-1/4 I.D.	5,875

* MATERIAL FOR GRADE 2 END, CORNER & LINE POSTS AND TOP & BRACE RAILS MUST MEET OR EXCEED BENDING MOMENTS FOR GRADE 1 STEEL AS NOTED ABOVE.

NOTES:

1. BRACE PANELS SHALL BE INSTALLED WHERE THE CHANGE IN GRADE BETWEEN ANY THREE POSTS EXCEEDS 15 PERCENT.
2. NO ADDITIONAL PAYMENT WILL BE MADE FOR LONGER POSTS NECESSITATED BY LARGE GRADE DIFFERENTIAL.
3. TYPE I BRACING WILL BE USED AT FENCE ENDS. TYPE II BRACING WILL BE USED AT CORNER POSTS.
4. WHEN LEDGE IS ENCOUNTERED, STEEL POSTS SHALL BE SET AND GROUTED 12" DEEP UNLESS THE POSTS PENETRATE THE GROUND TO THE DEPTH INDICATED ON THE DRAWINGS.
5. CONCRETE FOR POST FOUNDATION SHALL BE CLASS B.
6. BRACE, GATE AND END POSTS SHALL BE SET IN CONCRETE.
7. CHAIN LINK FENCE SHALL BE INSTALLED WITH BARBS DOWN.
8. ALL COMPONENTS OF CHAIN LINK FENCE SHALL BE IN ACCORDANCE WITH AASHTO M181.

Date:11/10/2016

Filename: 009 Fence Details.dgn

Scale:

No.	Revision	By	Date

Designed by: HNTB

CONSULTANT PROJECT MANAGER: Dale A. Mitchell, P.E.

	By	Date		By	Date
Designed	LZD	11/16	Checked	RWH	11/16
Drawn	SLR	11/16	In Charge of	RAL	11/16

HNTB CORPORATION
340 County Road, Suite 6-C
Westbrook, ME 04092
TEL (207) 774-5155
FAX (207) 228-0909

MAINE TURNPIKE

THE GOLD STAR MEMORIAL HIGHWAY

MTA PROJECT MANAGER: Ralph C. Norwood IV, P.E., P.T.O.E.

BRIDGE REPLACEMENT
MAXWELL ROAD UNDERPASS

MISCELLANEOUS DETAILS 1

SHEET NUMBER: MD-01

CONTRACT:2017.03

DIMENSIONS FOR SLOPE OF 2:1

D	a (FT)	b (FT)	c (FT)	e (FT)	f (FT)	g (FT)	STONE DEPTH (FT)	STONE (CY)
12"	1.00	4.00	3.00	2.00	6.00	1.00	1.50	1.30
15"	1.00	4.50	3.37	2.25	6.75	1.63	1.50	1.70
18"	1.00	5.00	3.75	2.50	7.50	2.25	1.50	2.09
21"	1.00	5.50	4.13	2.75	8.25	2.88	1.50	2.58
24"	1.00	6.00	4.50	3.00	9.00	3.50	1.50	3.12
30"	1.00	7.00	5.25	3.50	10.50	4.75	1.50	4.33
36"	1.00	8.00	6.00	4.00	12.00	6.00	1.50	5.75
42"	1.00	9.00	6.75	4.50	13.50	7.25	1.50	7.37
48"	1.00	10.00	7.50	5.00	15.00	8.50	1.50	9.18
54"	1.00	11.00	8.25	5.50	16.50	9.75	1.50	11.19
60"	1.00	12.00	9.00	6.00	18.00	11.00	1.50	13.40
66"	1.00	13.00	9.75	6.50	19.50	12.25	1.50	15.81
72"	1.00	14.00	10.50	7.00	21.00	13.50	1.50	18.41
84"	1.00	16.00	12.00	8.00	24.00	16.00	1.50	24.22

DIMENSIONS FOR SLOPE OF 4:1

D	a (FT)	b (FT)	c (FT)	e (FT)	f (FT)	g (FT)	STONE DEPTH (FT)	STONE (CY)
12"	1.00	8.00	6.00	2.00	6.00	0.00	1.50	2.20
15"	1.00	9.00	6.75	2.25	6.75	0.00	1.50	2.80
18"	1.00	10.00	7.50	2.50	7.50	0.00	1.50	3.40
21"	1.00	11.00	8.25	2.75	8.25	0.00	1.50	4.10
24"	1.00	12.00	9.00	3.00	9.00	0.00	1.50	4.86
30"	1.00	14.00	10.50	3.50	10.50	0.00	1.50	6.58
36"	1.00	16.00	12.00	4.00	12.00	0.00	1.50	8.56
42"	1.00	18.00	13.50	4.50	13.50	0.50	1.50	10.92
48"	1.00	20.00	15.00	5.00	15.00	1.00	1.50	13.57
54"	1.00	22.00	16.50	5.50	16.50	1.50	1.50	16.50
60"	1.00	24.00	18.00	6.00	18.00	2.00	1.50	19.72
66"	1.00	26.00	19.50	6.50	19.50	2.50	1.50	23.22
72"	1.00	28.00	21.00	7.00	21.00	3.00	1.50	27.01
84"	1.00	32.00	24.00	8.00	24.00	4.00	1.50	35.45

DIMENSIONS FOR SLOPE OF 6:1

D	a (FT)	b (FT)	c (FT)	e (FT)	f (FT)	g (FT)	STONE DEPTH (FT)	STONE (CY)
12"	0.50	9.00	7.50	1.50	4.50	0.00	1.50	2.30
15"	0.50	10.50	8.75	1.75	5.50	0.00	1.50	2.93
18"	0.50	12.00	10.00	2.00	6.50	0.00	1.50	3.57
21"	0.50	13.50	11.25	2.25	7.25	0.00	1.50	4.46
24"	0.50	15.00	12.50	2.50	8.00	0.00	1.50	5.44
30"	0.50	18.00	15.00	3.00	9.50	0.00	1.50	7.71
36"	0.50	21.00	17.50	3.50	11.00	0.00	1.50	10.37
42"	0.50	24.00	20.00	4.00	12.50	0.00	1.50	13.42
48"	0.50	27.00	22.50	4.50	14.00	0.00	1.50	16.87
54"	0.50	30.00	25.00	5.00	15.50	0.00	1.50	20.70
60"	0.50	33.00	27.50	5.50	17.00	0.00	1.50	24.93
66"	0.50	36.00	30.00	6.00	18.50	0.00	1.50	29.55
72"	0.50	39.00	32.50	6.50	20.00	0.00	1.50	34.56
84"	0.50	45.00	37.50	7.50	23.00	0.00	1.50	45.76

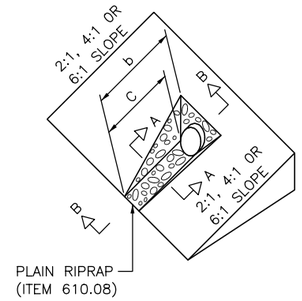

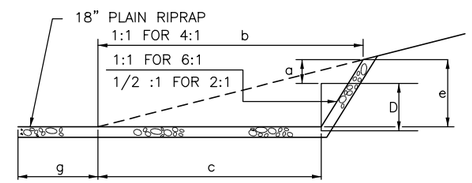

SECTION B-B

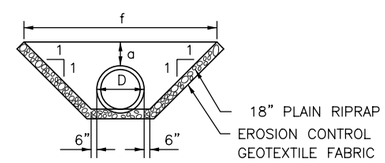

SECTION A-A

ROADWAY CULVERT END SLOPE TREATMENT

NOTES:

1. THE DIMENSIONS SHOWN ARE APPROXIMATE AND MAY BE MODIFIED BY THE RESIDENT.
2. STONE QUANTITIES ARE FOR ONE END OF THE PIPE.

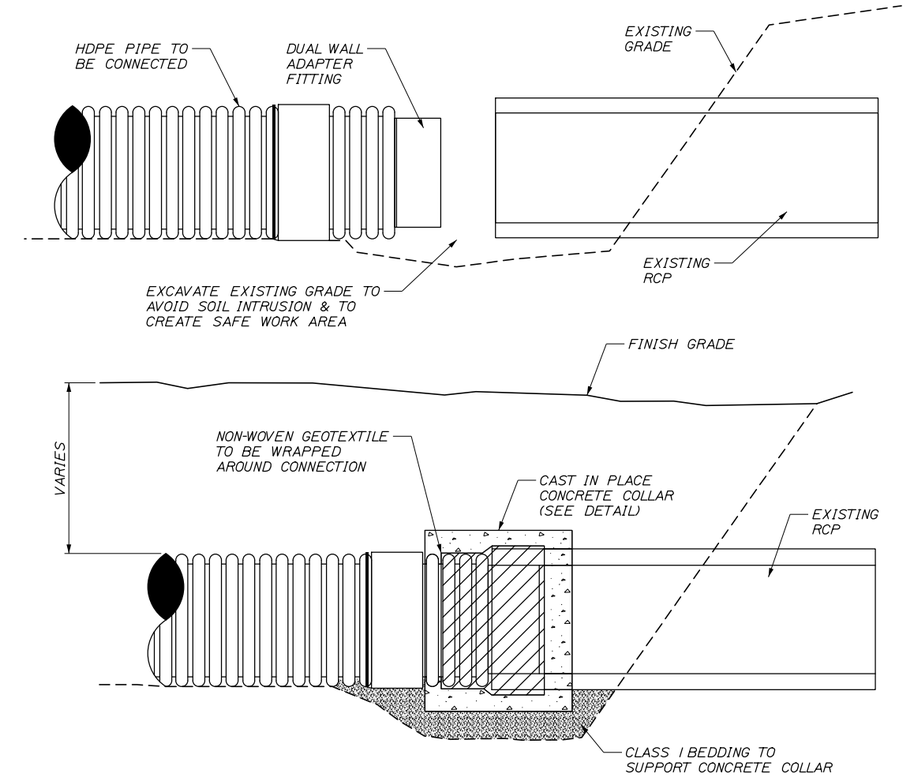

HDPE ADAPTER DETAIL

NOT TO SCALE

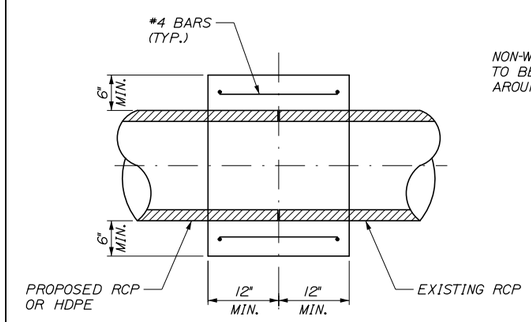

PLAN

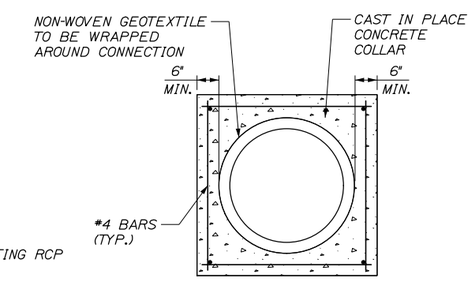

SECTION

CONCRETE COLLAR

NOT TO SCALE

NOTES:

1. PAMENT FOR HDPE ADAPTER AND CONCRETE COLLAR SHALL BE AS NOTED IN SPECIAL PROVISION 603.
2. CONNECTION AND PIPE TO BE BACKFILLED PER ASTM D2321.

Date:11/10/2016

Filename: 010_Erosion ControlDetails 01.dgn

Scale:

No.	Revision	By	Date

Designed by:

HNTB

CONSULTANT PROJECT MANAGER: Dale. A. Mitchell, P.E.

	By	Date		By	Date
Designed	LZD	11/16	Checked	RWH	11/16
Drawn	SLR	11/16	In Charge of	RAL	11/16

HNTB CORPORATION
340 County Road, Suite 6-C
Westbrook, ME 04092
TEL (207) 774-5155
FAX (207) 228-0909

MAINE TURNPIKE

THE GOLD STAR MEMORIAL HIGHWAY

MTA PROJECT MANAGER: Ralph C. Norwood, IV, P.E., P.T.O.E.

BRIDGE REPLACEMENT
MAXWELL ROAD UNDERPASS

MISCELLANEOUS DETAILS 2

SHEET NUMBER: MD-02

CONTRACT:2017.03

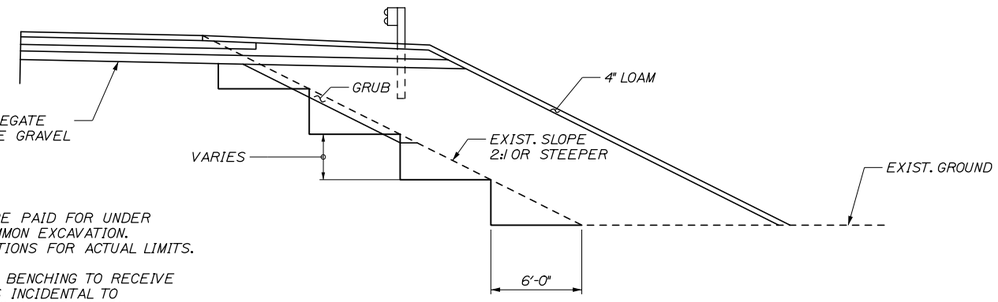

NOTES:

1. GRUBBING WILL BE PAID FOR UNDER ITEM 203.20 COMMON EXCAVATION. SEE CROSS SECTIONS FOR ACTUAL LIMITS.
2. EXCAVATION FOR BENCHING TO RECEIVE EMBANKMENTS IS INCIDENTAL TO ITEM 203.20 COMMON EXCAVATION.
3. BENCHING IS REQUIRED WHERE FILL IS TO BE PLACED ON EXISTING EMBANKMENTS WITH SLOPES 2:1 OR STEEPER.

BENCH DETAIL

N.T.S.

NOTE:
SEE BRIDGE RAIL TRANSITION DETAILS FOR MORE INFORMATION.

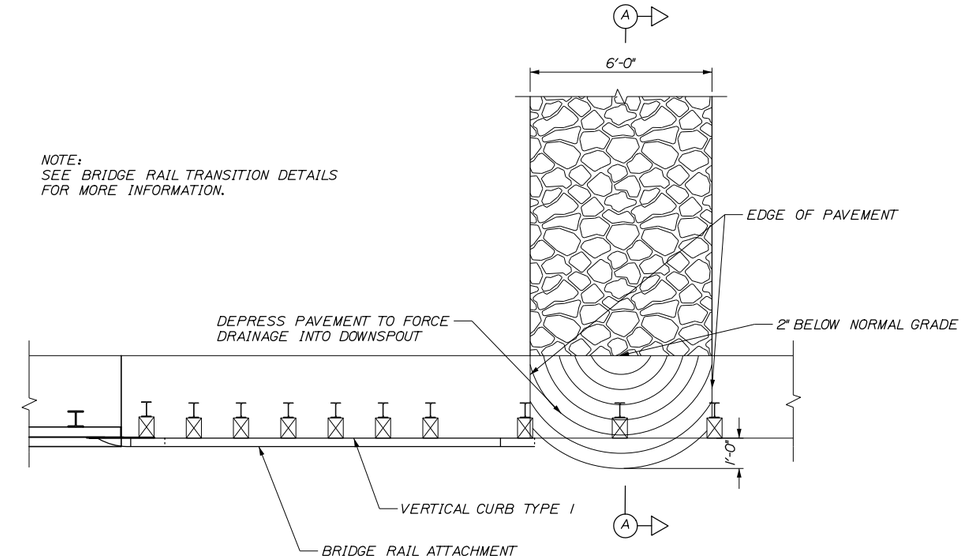

PLAN VIEW

1" = 5'-0"

NOTE:
STONE FOR STONE DOWNSPOUTS SHALL MEET THE REQUIREMENTS OF MDOT SPECIFICATION 703.29, AND WILL BE PAID FOR UNDER ITEM 610.18, STONE DITCH PROTECTION.

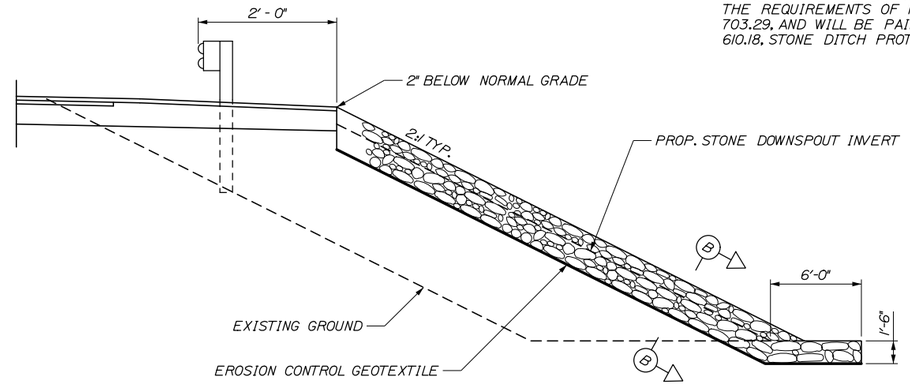

SECTION A-A

NTS

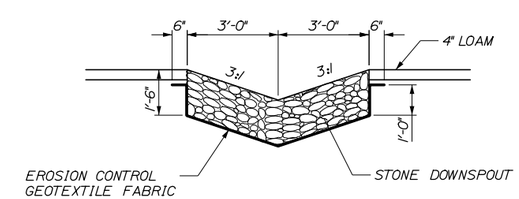

SECTION B-B

1" = 10'-0"

1 LF of Downspout = 0.33 CY of Stone Ditch Protection
1 LF of Downspout = 1.04 SY of Erosion Control Geotextile Fabric

DOWNSPOUT DETAILS

Date:11/10/2016

Filename: 011_Erosion Control Detail 02.dgn

Scale:

No.	Revision	By	Date

Designed by:

HNTB

CONSULTANT PROJECT MANAGER: Dale A. Mitchell, P.E.

	By	Date		By	Date
Designed	LZD	11/16	Checked	RWH	11/16
Drawn	SLR	11/16	In Charge of	RAL	11/16

HNTB CORPORATION
340 County Road, Suite 6-C
Westbrook, ME 04092
TEL (207) 774-5155
FAX (207) 228-0909

MAINE TURNPIKE

THE GOLD STAR MEMORIAL HIGHWAY

MTA PROJECT MANAGER: Ralph C. Norwood IV, P.E., P.T.O.E.

BRIDGE REPLACEMENT
MAXWELL ROAD UNDERPASS

MISCELLANEOUS DETAILS 3

SHEET NUMBER: MD-03

CONTRACT:2017.03

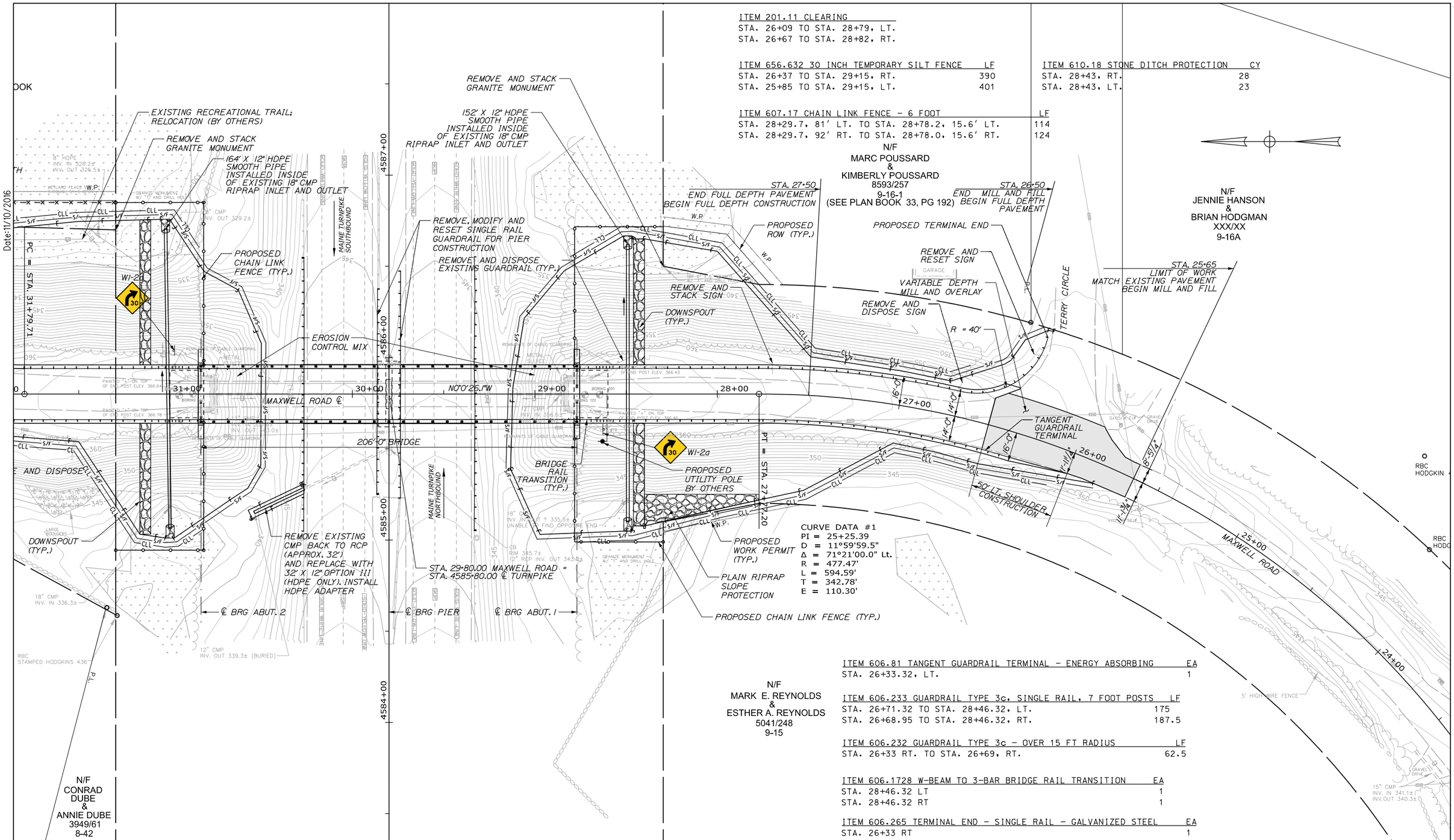

ITEM 201.11 CLEARING
STA. 26+09 TO STA. 28+79, LT.
STA. 26+67 TO STA. 28+82, RT.

ITEM 656.632 30 INCH TEMPORARY SILT FENCE	LF
STA. 26+37 TO STA. 29+15, RT.	390
STA. 25+85 TO STA. 29+15, LT.	401

ITEM 610.18 STONE DITCH PROTECTION	CY
STA. 28+43, RT.	28
STA. 28+43, LT.	23

ITEM 607.17 CHAIN LINK FENCE - 6 FOOT	LF
STA. 28+29.7, 81' LT. TO STA. 28+78.2, 15.6' LT.	114
STA. 28+29.7, 92' RT. TO STA. 28+78.0, 15.6' RT.	124

ITEM 606.81 TANGENT GUARDRAIL TERMINAL - ENERGY ABSORBING	EA
STA. 26+33.32, LT.	1

ITEM 606.233 GUARDRAIL TYPE 3c, SINGLE RAIL, 7 FOOT POSTS	LF
STA. 26+71.32 TO STA. 28+46.32, LT.	175
STA. 26+68.95 TO STA. 28+46.32, RT.	187.5

ITEM 606.232 GUARDRAIL TYPE 3c - OVER 15 FT RADIUS	LF
STA. 26+33 RT. TO STA. 26+69, RT.	62.5

ITEM 606.1728 W-BEAM TO 3-BAR BRIDGE RAIL TRANSITION	EA
STA. 28+46.32 LT	1
STA. 28+46.32 RT	1

ITEM 606.265 TERMINAL END - SINGLE RAIL - GALVANIZED STEEL	EA
STA. 26+33 RT	1

Scale: 25 0 25 50
Scale of Feet

No.	Revision	By	Date

Designed by: HNTB

CONSULTANT PROJECT MANAGER: Dale. A. Mitchell, P.E.

	By	Date		By	Date
Designed	LZD	11/16	Checked	RWH	11/16
Drawn	SLR	11/16	In Charge of	RAL	11/16

HNTB CORPORATION
340 County Road, Suite 6-C
Westbrook, ME 04092
TEL (207) 774-5155
FAX (207) 228-0909

MAINE TURNPIKE

THE GOLD STAR MEMORIAL HIGHWAY

MTA PROJECT MANAGER: Ralph C. Norwood, IV, P.E., P.T.O.E.

BRIDGE REPLACEMENT
MAXWELL ROAD UNDERPASS

PLAN 1

SHEET NUMBER: PL-01

CONTRACT:2017.03

Filename: 012_PLAN 1.dgn

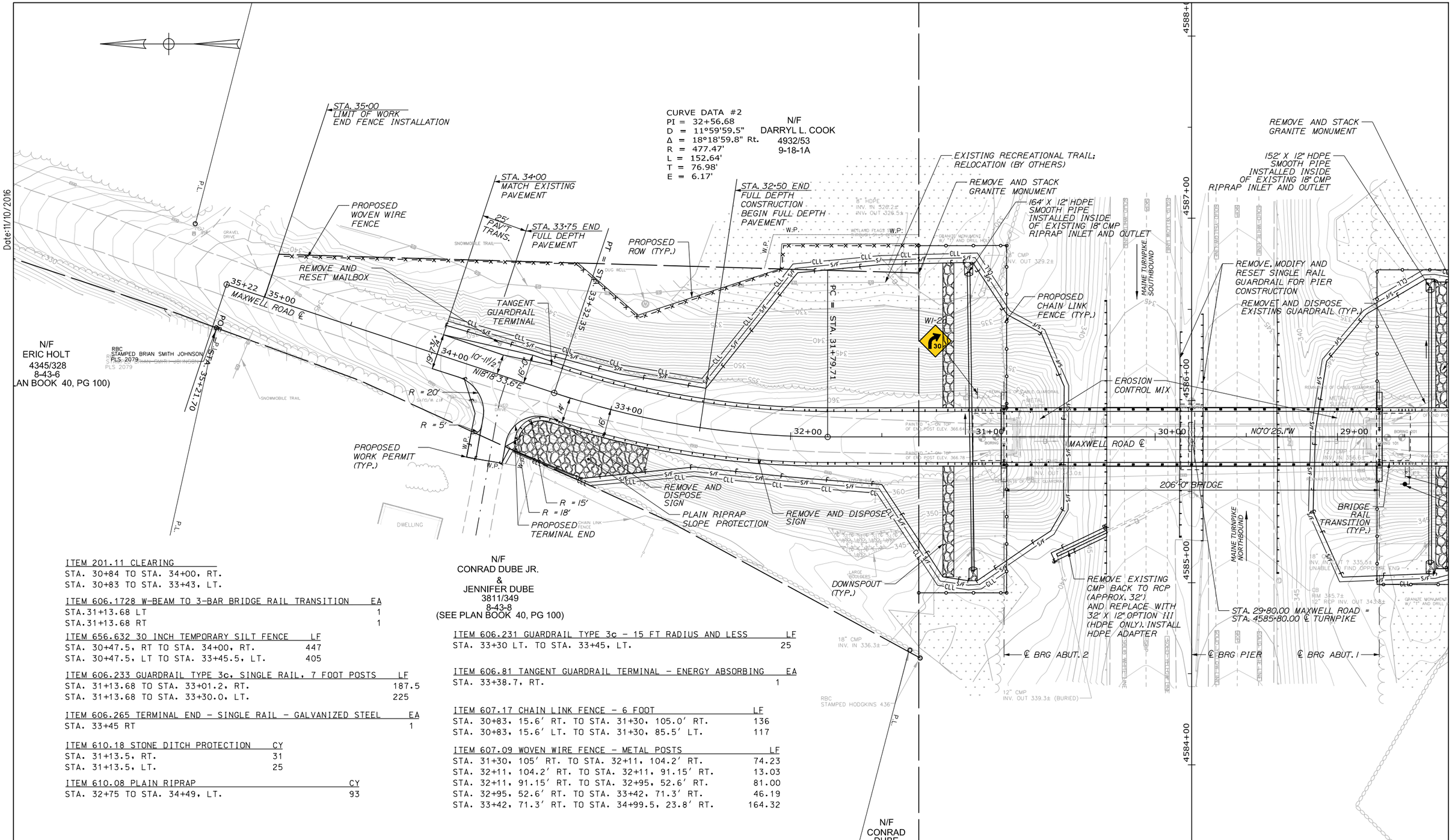

ITEM 201.11 CLEARING
STA. 30+84 TO STA. 34+00, RT.
STA. 30+83 TO STA. 33+43, LT.

ITEM 606.1728 W-BEAM TO 3-BAR BRIDGE RAIL TRANSITION	EA
STA.31+13.68 LT	1
STA.31+13.68 RT	1

ITEM 656.632 30 INCH TEMPORARY SILT FENCE	LF
STA. 30+47.5, RT TO STA. 34+00, RT.	447
STA. 30+47.5, LT TO STA. 33+45.5, LT.	405

ITEM 606.233 GUARDRAIL TYPE 3c, SINGLE RAIL, 7 FOOT POSTS	LF
STA. 31+13.68 TO STA. 33+01.2, RT.	187.5
STA. 31+13.68 TO STA. 33+30.0, LT.	225

ITEM 606.265 TERMINAL END - SINGLE RAIL - GALVANIZED STEEL	EA
STA. 33+45 RT	1

ITEM 610.18 STONE DITCH PROTECTION	CY
STA. 31+13.5, RT.	31
STA. 31+13.5, LT.	25

ITEM 610.08 PLAIN RIPRAP	CY
STA. 32+75 TO STA. 34+49, LT.	93

ITEM 606.231 GUARDRAIL TYPE 3c - 15 FT RADIUS AND LESS	LF
STA. 33+30 LT. TO STA. 33+45, LT.	25

ITEM 606.81 TANGENT GUARDRAIL TERMINAL - ENERGY ABSORBING	EA
STA. 33+38.7, RT.	1

ITEM 607.17 CHAIN LINK FENCE - 6 FOOT	LF
STA. 30+83, 15.6' RT. TO STA. 31+30, 105.0' RT.	136
STA. 30+83, 15.6' LT. TO STA. 31+30, 85.5' LT.	117

ITEM 607.09 WOVEN WIRE FENCE - METAL POSTS	LF
STA. 31+30, 105' RT. TO STA. 32+11, 104.2' RT.	74.23
STA. 32+11, 104.2' RT. TO STA. 32+11, 91.15' RT.	13.03
STA. 32+11, 91.15' RT. TO STA. 32+95, 52.6' RT.	81.00
STA. 32+95, 52.6' RT. TO STA. 33+42, 71.3' RT.	46.19
STA. 33+42, 71.3' RT. TO STA. 34+99.5, 23.8' RT.	164.32

Date:11/10/2016

Filename: 013_PLAN 2.dgn

Scale: 25 0 25 50
Scale of Feet

No.	Revision	By	Date

Designed by:

HNTB

CONSULTANT PROJECT MANAGER: Dale. A. Mitchell, P.E.

	By	Date		By	Date
Designed	LZD	11/16	Checked	RWH	11/16
Drawn	SLR	11/16	In Charge of	RAL	11/16

HNTB CORPORATION
340 County Road, Suite 6-C
Westbrook, ME 04092
TEL (207) 774-5155
FAX (207) 228-0909

MAINE TURNPIKE

THE GOLD STAR MEMORIAL HIGHWAY

MTA PROJECT MANAGER: Ralph C. Norwood, IV, P.E., P.T.O.E.

BRIDGE REPLACEMENT
MAXWELL ROAD UNDERPASS

PLAN 2

SHEET NUMBER: PL-02

CONTRACT:2017.03

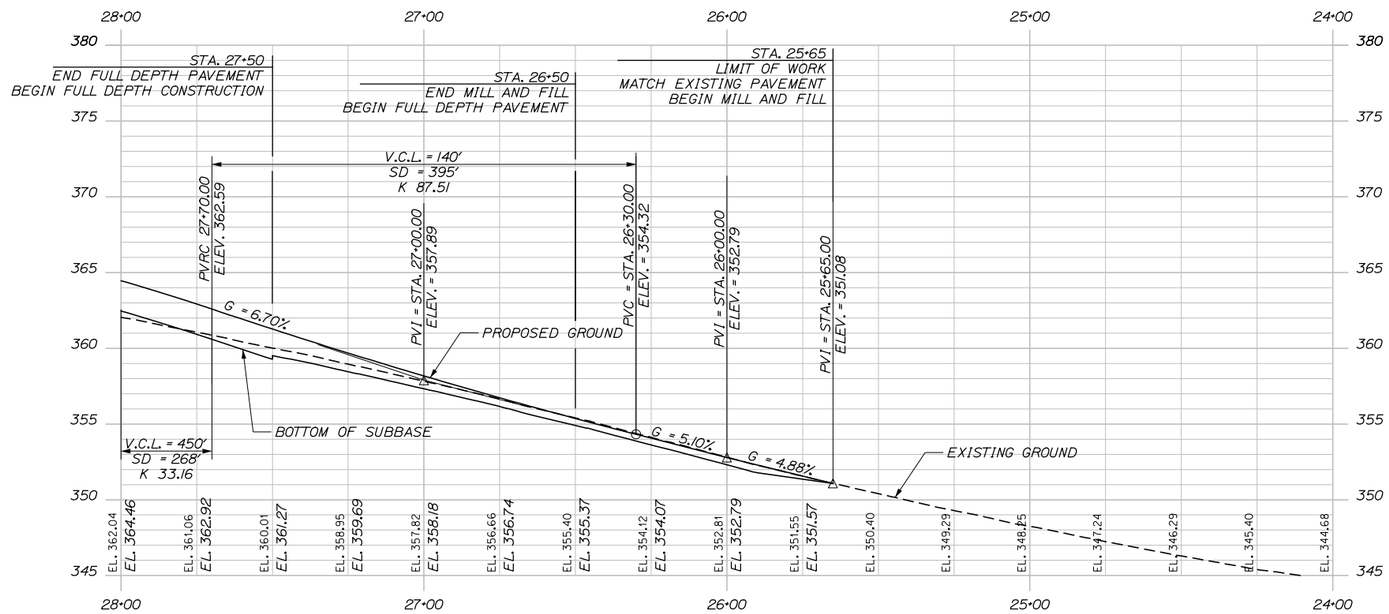

PROFILE

Date:11/10/2016

Filename: 014_PROFILE 1.dgn

Scale: 25 0 25 50
Scale of Feet

No.	Revision	By	Date

Designed by:

HNTB

CONSULTANT PROJECT MANAGER: Dale. A. Mitchell, P.E.

	By	Date		By	Date
Designed	LZD	11/16	Checked	RWH	11/16
Drawn	SLR	11/16	In Charge of	RAL	11/16

HNTB CORPORATION
340 County Road, Suite 6-C
Westbrook, ME 04092
TEL (207) 774-5155
FAX (207) 228-0909

MAINE TURNPIKE

THE GOLD STAR MEMORIAL HIGHWAY

MTA PROJECT MANAGER: Ralph C. Norwood, IV, P.E., P.T.O.E.

BRIDGE REPLACEMENT
MAXWELL ROAD UNDERPASS

PROFILE 1

SHEET NUMBER: PR-01

CONTRACT:2017.03

Date:11/10/2016

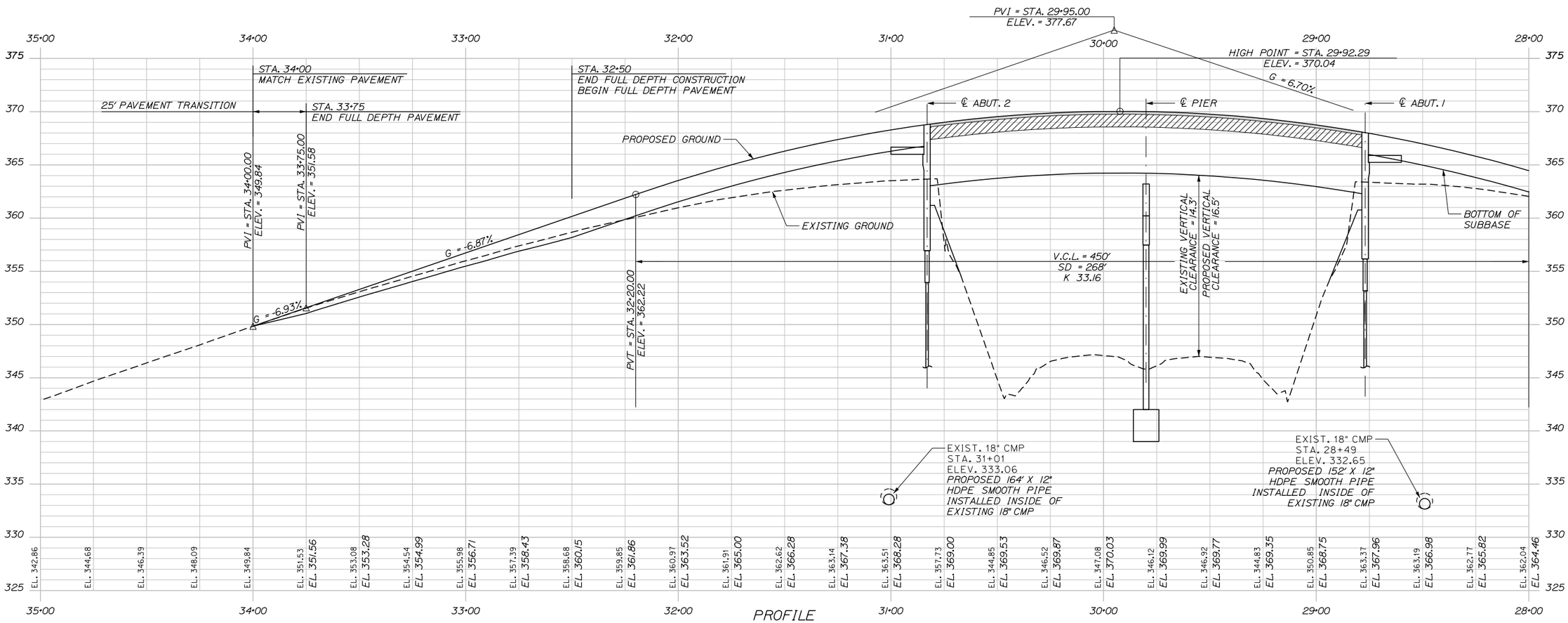

PROFILE

Filename: 015_PROFILE 2.dgn

Scale: 25 0 25 50
Scale of Feet

No.	Revision	By	Date

Designed by:

HNTB

CONSULTANT PROJECT MANAGER: Dale. A. Mitchell, P.E.

	By	Date		By	Date
Designed	LZD	11/16	Checked	RWH	11/16
Drawn	SLR	11/16	In Charge of	RAL	11/16

HNTB CORPORATION
340 County Road, Suite 6-C
Westbrook, ME 04092
TEL (207) 774-5155
FAX (207) 228-0909

MAINE TURNPIKE

THE GOLD STAR MEMORIAL HIGHWAY

MTA PROJECT MANAGER: Ralph C. Norwood, IV, P.E., P.T.O.E.

BRIDGE REPLACEMENT
MAXWELL ROAD UNDERPASS

PROFILE 2

SHEET NUMBER: PR-02

CONTRACT:2017.03

Date:11/10/2016

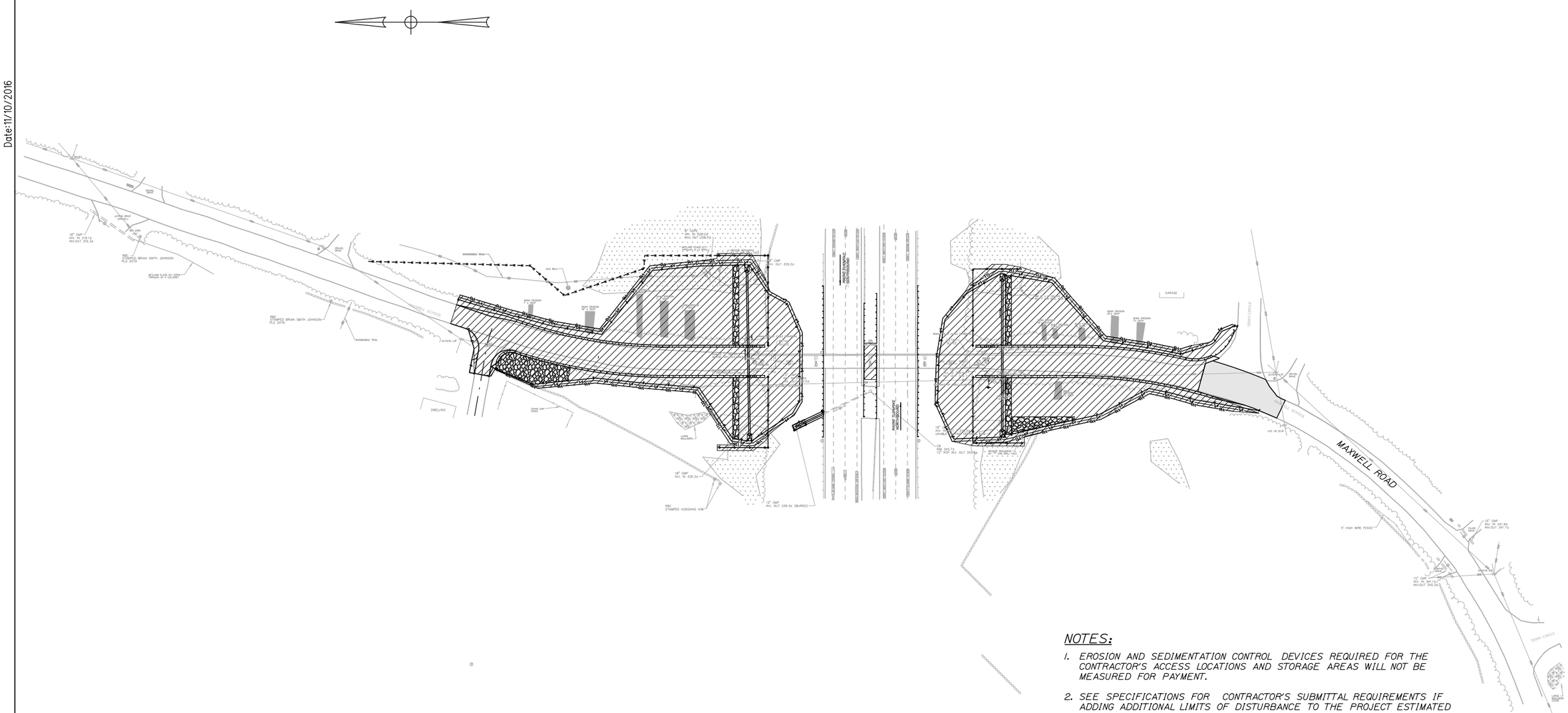

NOTES:

1. EROSION AND SEDIMENTATION CONTROL DEVICES REQUIRED FOR THE CONTRACTOR'S ACCESS LOCATIONS AND STORAGE AREAS WILL NOT BE MEASURED FOR PAYMENT.
2. SEE SPECIFICATIONS FOR CONTRACTOR'S SUBMITTAL REQUIREMENTS IF ADDING ADDITIONAL LIMITS OF DISTURBANCE TO THE PROJECT ESTIMATED QUANTITIES.
3. AN ADDITIONAL 1.0 ACRE HAS BEEN ESTIMATED FOR CONTRACTOR ACCESS LOCATIONS AND STORAGE AREAS.
4. TOTAL LIMIT OF DISTURBANCE FOR THIS PROJECT HAS BEEN ESTIMATED TO BE 2.5 ACRES.

LEGEND:

CONTRACT LIMIT OF DISTURBANCE
66,676 SF (1.5 ACRES)

Filename: 016_Limits of Disturbance.dgn

Scale: 50 0 50 100
Scale of Feet

No.	Revision	By	Date

Designed by:

HNTB

CONSULTANT PROJECT MANAGER: Dale. A. Mitchell, P.E.

	By	Date		By	Date
Designed	LZD	11/16	Checked	RWH	11/16
Drawn	SLR	11/16	In Charge of	RAL	11/16

HNTB CORPORATION
340 County Road, Suite 6-C
Westbrook, ME 04092
TEL (207) 774-5155
FAX (207) 228-0909

MAINE TURNPIKE

THE GOLD STAR MEMORIAL HIGHWAY

MTA PROJECT MANAGER: Ralph C. Norwood, IV, P.E., P.T.O.E.

BRIDGE REPLACEMENT
MAXWELL ROAD UNDERPASS

LIMITS OF DISTURBANCE

SHEET NUMBER: LOD-01

CONTRACT:2017.03

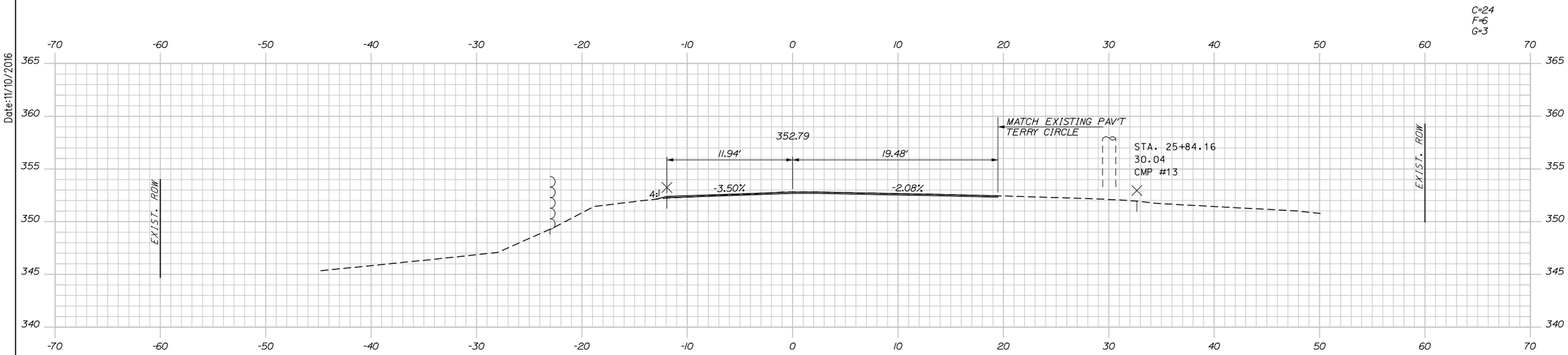

26+00.00

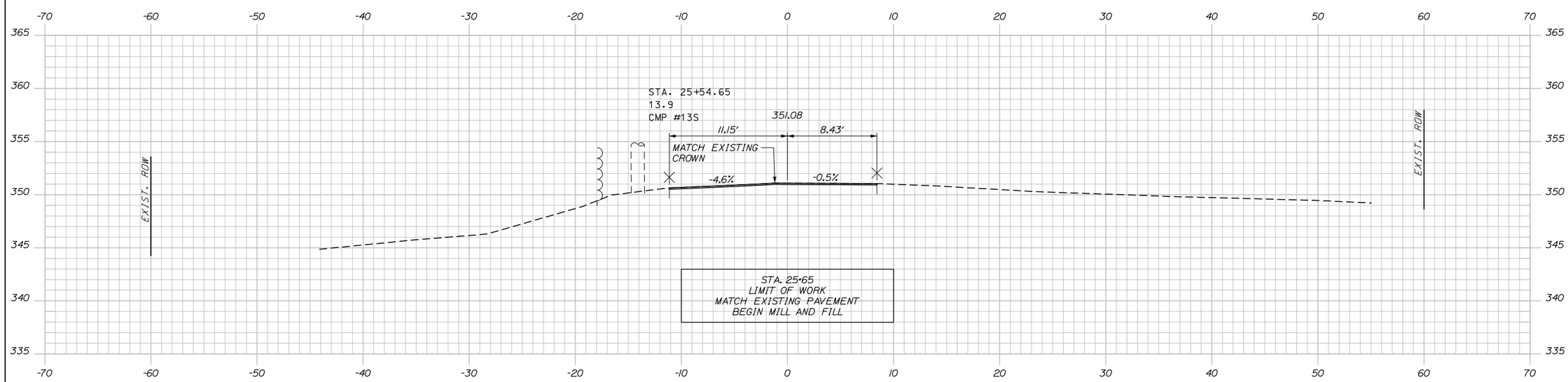

25+65.00

Date:11/10/2016

Filename: xsecs.dgn

Scale: 5 0 5 10
Scale of Feet

No.	Revision	By	Date

Designed by: HNTB

CONSULTANT PROJECT MANAGER: Dale. A. Mitchell, P.E.

	By	Date		By	Date
Designed	LZD	11/16	Checked	RWH	11/16
Drawn	SLR	11/16	In Charge of	RAL	11/16

HNTB CORPORATION
340 County Road, Suite 6-C
Westbrook, ME 04092
TEL (207) 774-5155
FAX (207) 228-0909

MAINE TURNPIKE

THE GOLD STAR MEMORIAL HIGHWAY

MTA PROJECT MANAGER: Ralph C. Norwood, IV, P.E., P.T.O.E.

BRIDGE REPLACEMENT
MAXWELL ROAD UNDERPASS

STA. 25+65 TO STA. 26+00

SHEET NUMBER: XS-01

CONTRACT:2017.03

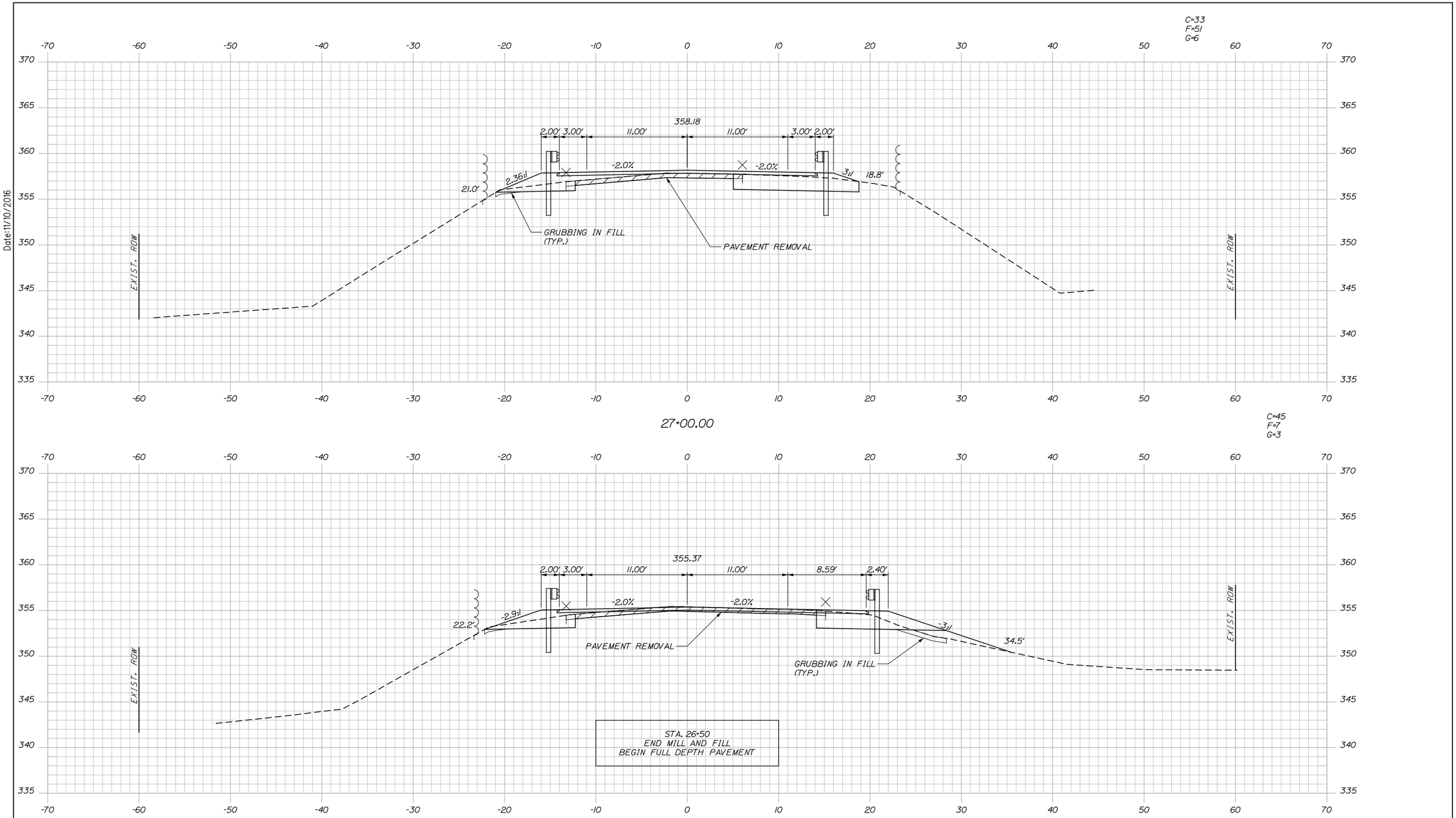

Date:11/10/2016

Scale: 5 0 5 10
Scale of Feet

No.	Revision	By	Date

Designed by:

HNTB

CONSULTANT PROJECT MANAGER: Dale. A. Mitchell, P.E.

	By	Date		By	Date
Designed	LZD	11/16	Checked	RWH	11/16
Drawn	SLR	11/16	In Charge of	RAL	11/16

HNTB CORPORATION
340 County Road, Suite 6-C
Westbrook, ME 04092
TEL (207) 774-5155
FAX (207) 228-0909

MAINE TURNPIKE

THE GOLD STAR MEMORIAL HIGHWAY

MTA PROJECT MANAGER: Ralph C. Norwood, IV, P.E., P.T.O.E.

BRIDGE REPLACEMENT
MAXWELL ROAD UNDERPASS

STA. 26+50 TO STA. 27+00

SHEET NUMBER: XS-02

CONTRACT:2017.03

Filename: xsecs.dgn

Date:11/10/2016

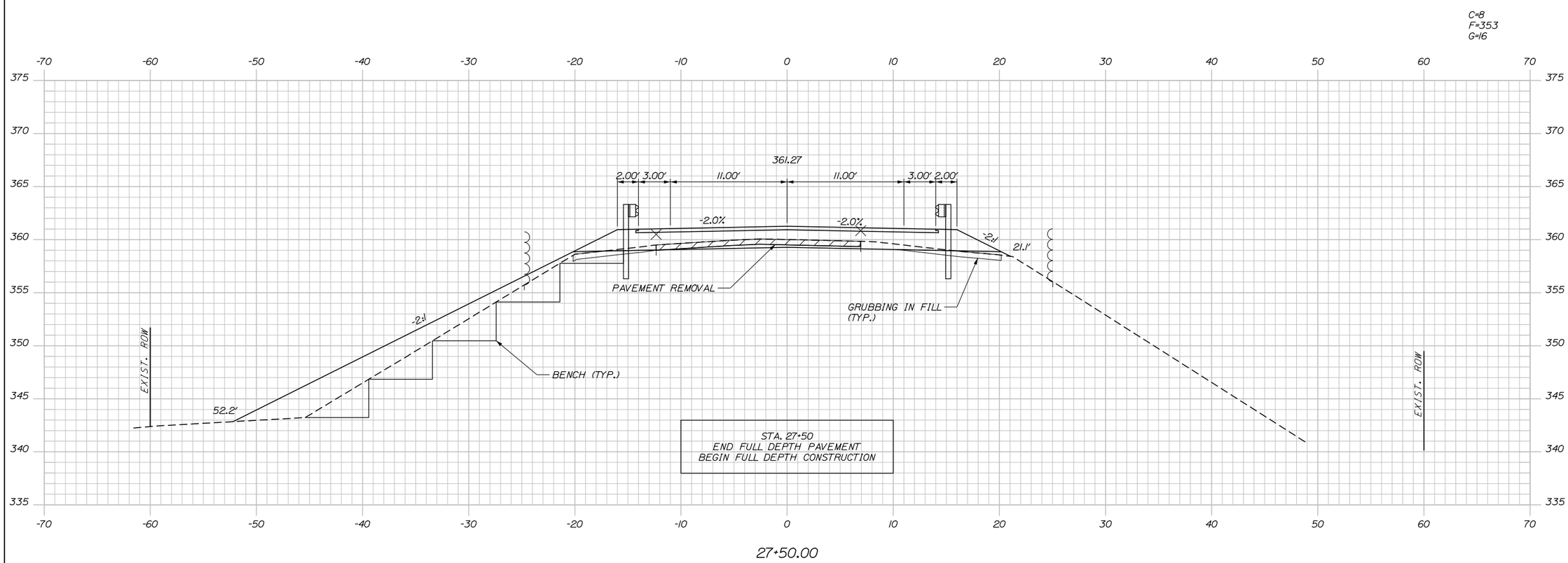

Scale: 5 0 5 10
Scale of Feet

No.	Revision	By	Date

Designed by:

HNTB

CONSULTANT PROJECT MANAGER: Dale. A. Mitchell, P.E.

	By	Date		By	Date
Designed	LZD	11/16	Checked	RWH	11/16
Drawn	SLR	11/16	In Charge of	RAL	11/16

HNTB CORPORATION
340 County Road, Suite 6-C
Westbrook, ME 04092
TEL (207) 774-5155
FAX (207) 228-0909

MAINE TURNPIKE

THE GOLD STAR MEMORIAL HIGHWAY

MTA PROJECT MANAGER: Ralph C. Norwood, IV, P.E., P.T.O.E.

BRIDGE REPLACEMENT
MAXWELL ROAD UNDERPASS

STA. 27+50

SHEET NUMBER: XS-03

CONTRACT:2017.03

Filename: xsecs.dgn

Date:11/10/2016

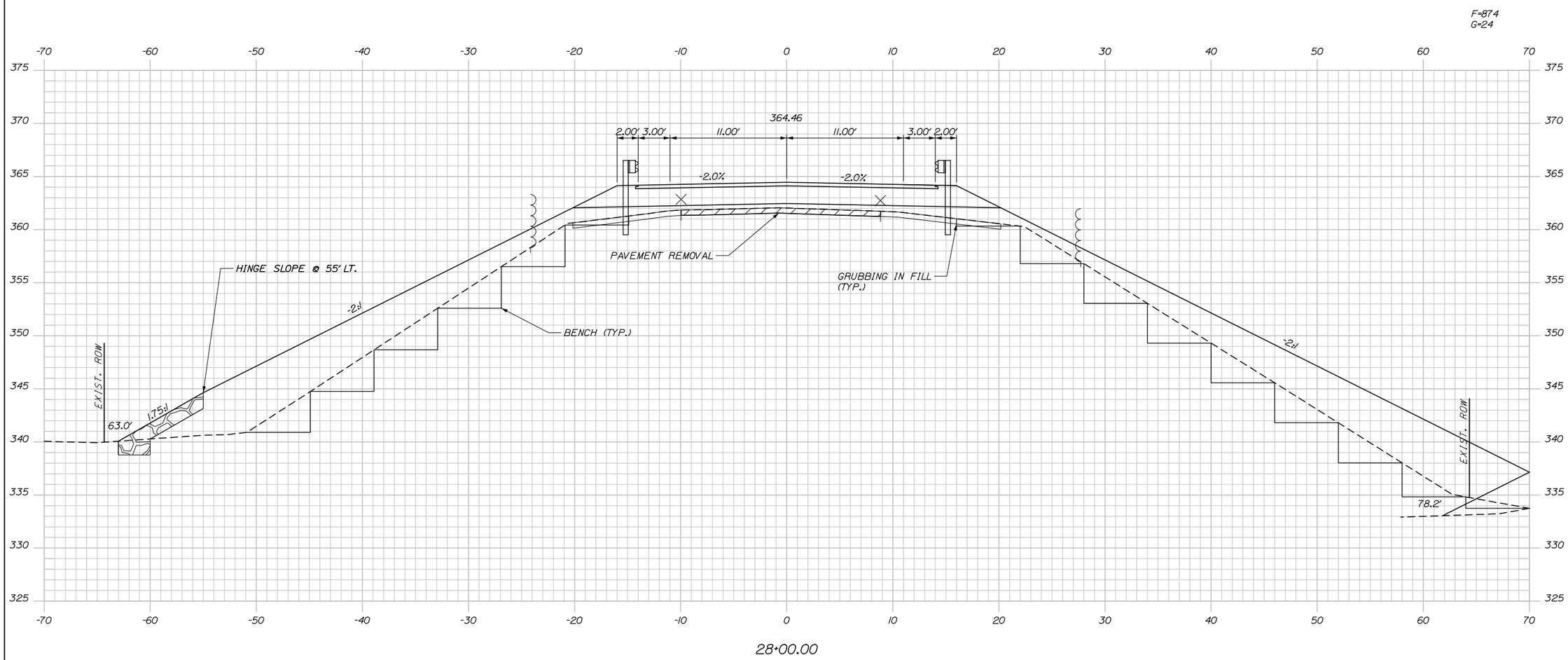

Scale: 5 0 5 10
Scale of Feet

No.	Revision	By	Date

Designed by:

HNTB

CONSULTANT PROJECT MANAGER: Dale. A. Mitchell, P.E.

	By	Date		By	Date
Designed	LZD	11/16	Checked	RWH	11/16
Drawn	SLR	11/16	In Charge of	RAL	11/16

HNTB CORPORATION
340 County Road, Suite 6-C
Westbrook, ME 04092
TEL (207) 774-5155
FAX (207) 228-0909

MAINE TURNPIKE

THE GOLD STAR MEMORIAL HIGHWAY

MTA PROJECT MANAGER: Ralph C. Norwood, IV, P.E., P.T.O.E.

BRIDGE REPLACEMENT
MAXWELL ROAD UNDERPASS

STA. 28+00

SHEET NUMBER: XS-04

CONTRACT:2017.03

Filename: xsecs.dgn

Date:11/10/2016

BRIDGE STATIONS 28+77 TO 30+83

F=616
G=15

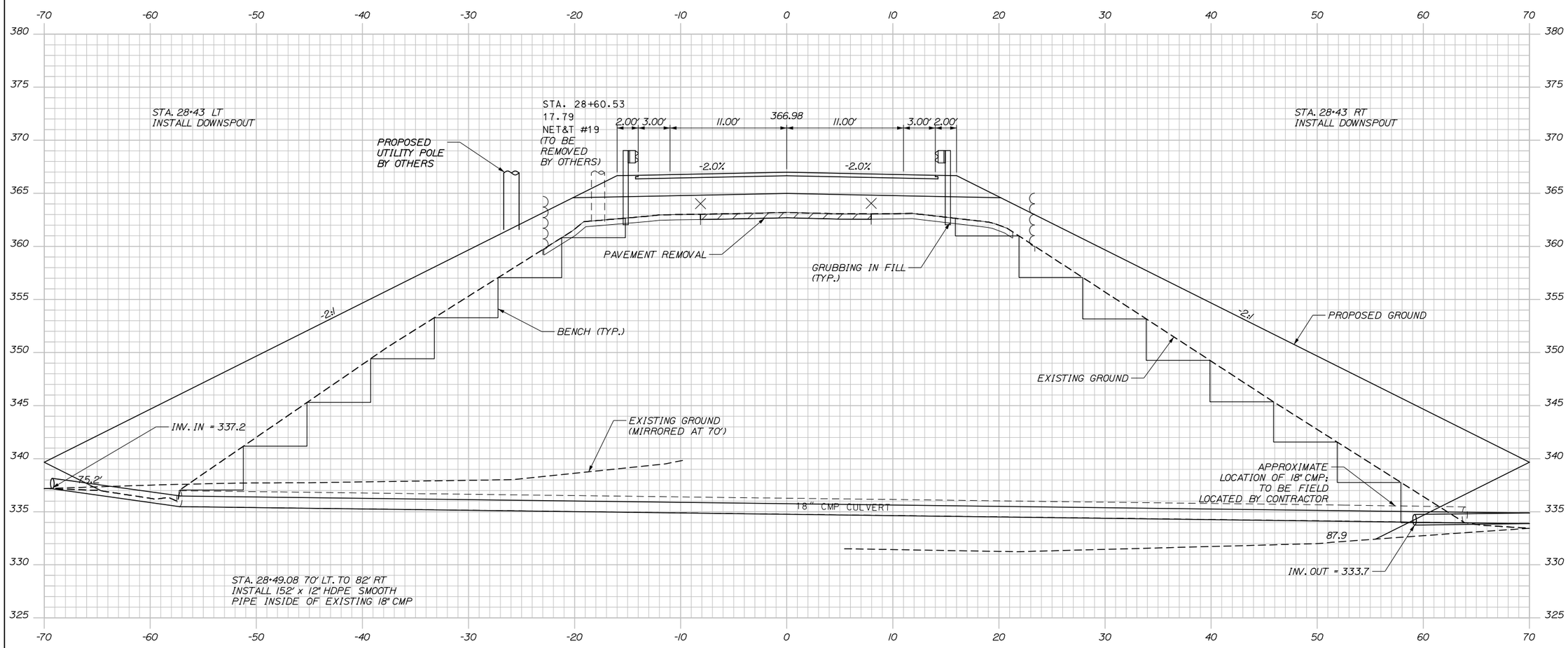

28+50.00

Scale: 5 0 5 10
Scale of Feet

No.	Revision	By	Date

Designed by:

HNTB

CONSULTANT PROJECT MANAGER: Dale. A. Mitchell, P.E.

	By	Date		By	Date
Designed	LZD	11/16	Checked	RWH	11/16
Drawn	SLR	11/16	In Charge of	RAL	11/16

HNTB CORPORATION
340 County Road, Suite 6-C
Westbrook, ME 04092
TEL (207) 774-5155
FAX (207) 228-0909

MAINE TURNPIKE

THE GOLD STAR MEMORIAL HIGHWAY

MTA PROJECT MANAGER: Ralph C. Norwood, IV, P.E., P.T.O.E.

BRIDGE REPLACEMENT
MAXWELL ROAD UNDERPASS

STA. 28+50

SHEET NUMBER: XS-05

CONTRACT:2017.03

21OF 54

Filename: xsecs.dgn

Date:11/10/2016

F=919
G=23

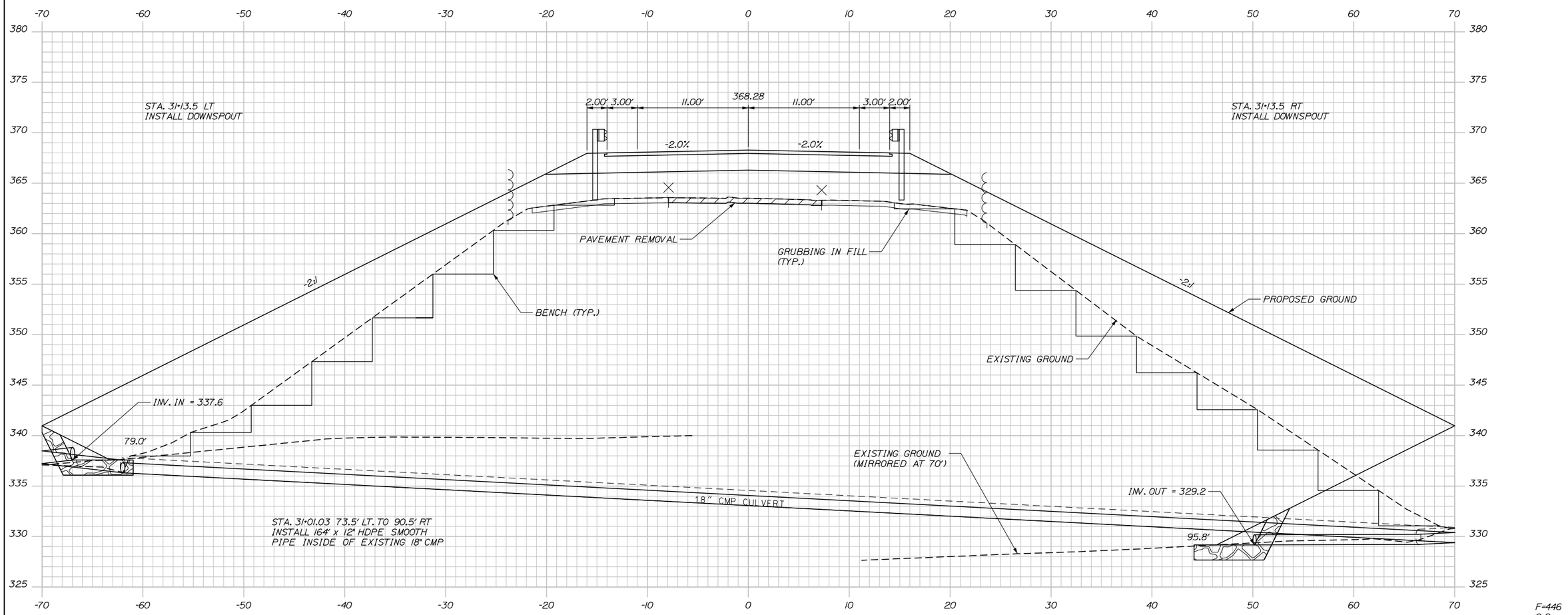

F=446
G=9

31+00.00

Scale: 5 0 5 10
Scale of Feet

No.	Revision	By	Date

Designed by:

HNTB

CONSULTANT PROJECT MANAGER: Dale. A. Mitchell, P.E.

	By	Date		By	Date
Designed	LZD	11/16	Checked	RWH	11/16
Drawn	SLR	11/16	In Charge of	RAL	11/16

HNTB CORPORATION
340 County Road, Suite 6-C
Westbrook, ME 04092
TEL (207) 774-5155
FAX (207) 228-0909

MAINE TURNPIKE

THE GOLD STAR MEMORIAL HIGHWAY

MTA PROJECT MANAGER: Ralph C. Norwood, IV, P.E., P.T.O.E.

BRIDGE REPLACEMENT
MAXWELL ROAD UNDERPASS

STA. 31+00

SHEET NUMBER: XS-06

CONTRACT:2017.03

Filename: xsecs.dgn

Date:11/10/2016

C=9
F=436
G=20

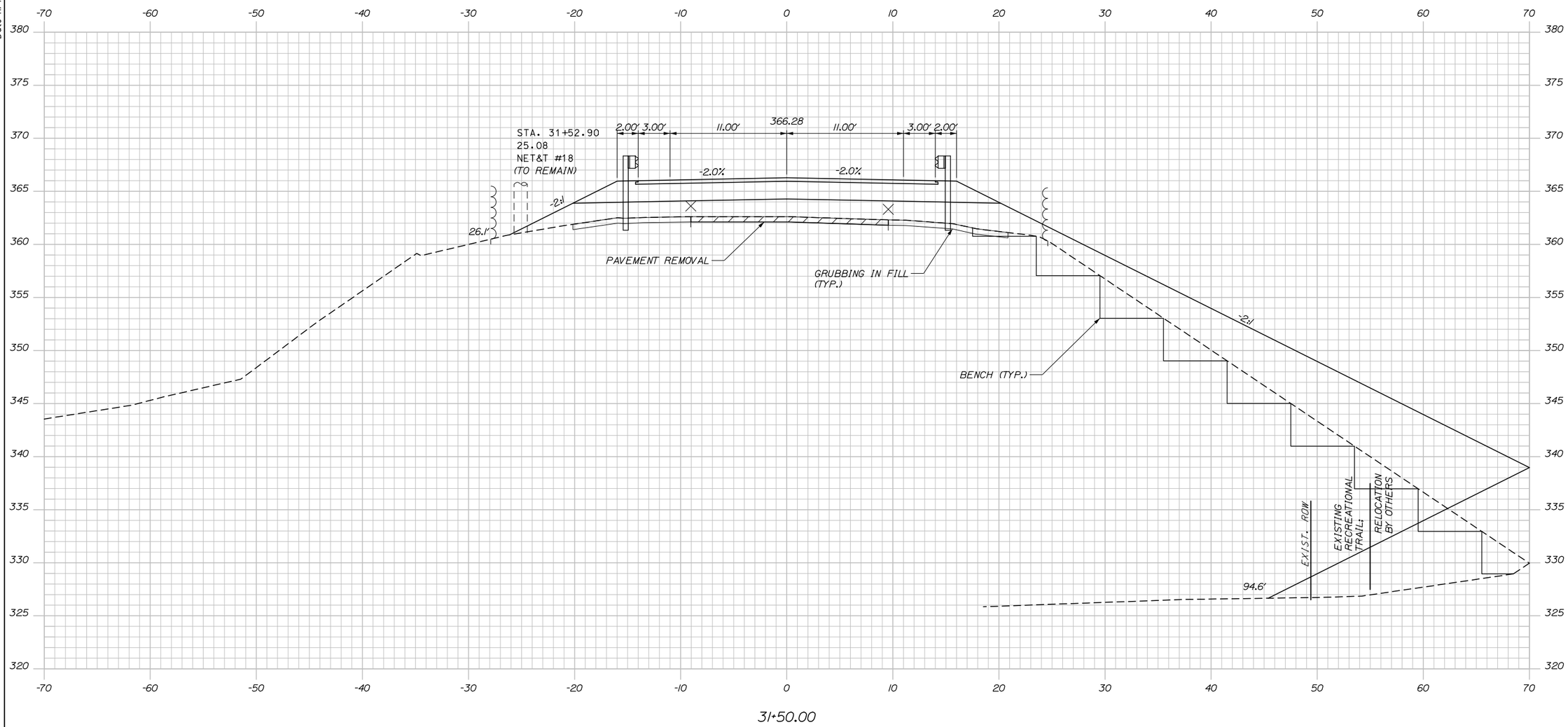

Scale: 5 0 5 10
Scale of Feet

No.	Revision	By	Date

Designed by:

HNTB

CONSULTANT PROJECT MANAGER: Dale. A. Mitchell, P.E.

	By	Date		By	Date
Designed	LZD	11/16	Checked	RWH	11/16
Drawn	SLR	11/16	In Charge of	RAL	11/16

HNTB CORPORATION
340 County Road, Suite 6-C
Westbrook, ME 04092
TEL (207) 774-5155
FAX (207) 228-0909

MAINE TURNPIKE

THE GOLD STAR MEMORIAL HIGHWAY

MTA PROJECT MANAGER: Ralph C. Norwood, IV, P.E., P.T.O.E.

BRIDGE REPLACEMENT
MAXWELL ROAD UNDERPASS

STA. 31+50

SHEET NUMBER: XS-07

CONTRACT:2017.03

Filename: xsecs.dgn

Date:11/10/2016

C=13
F=175
G=16

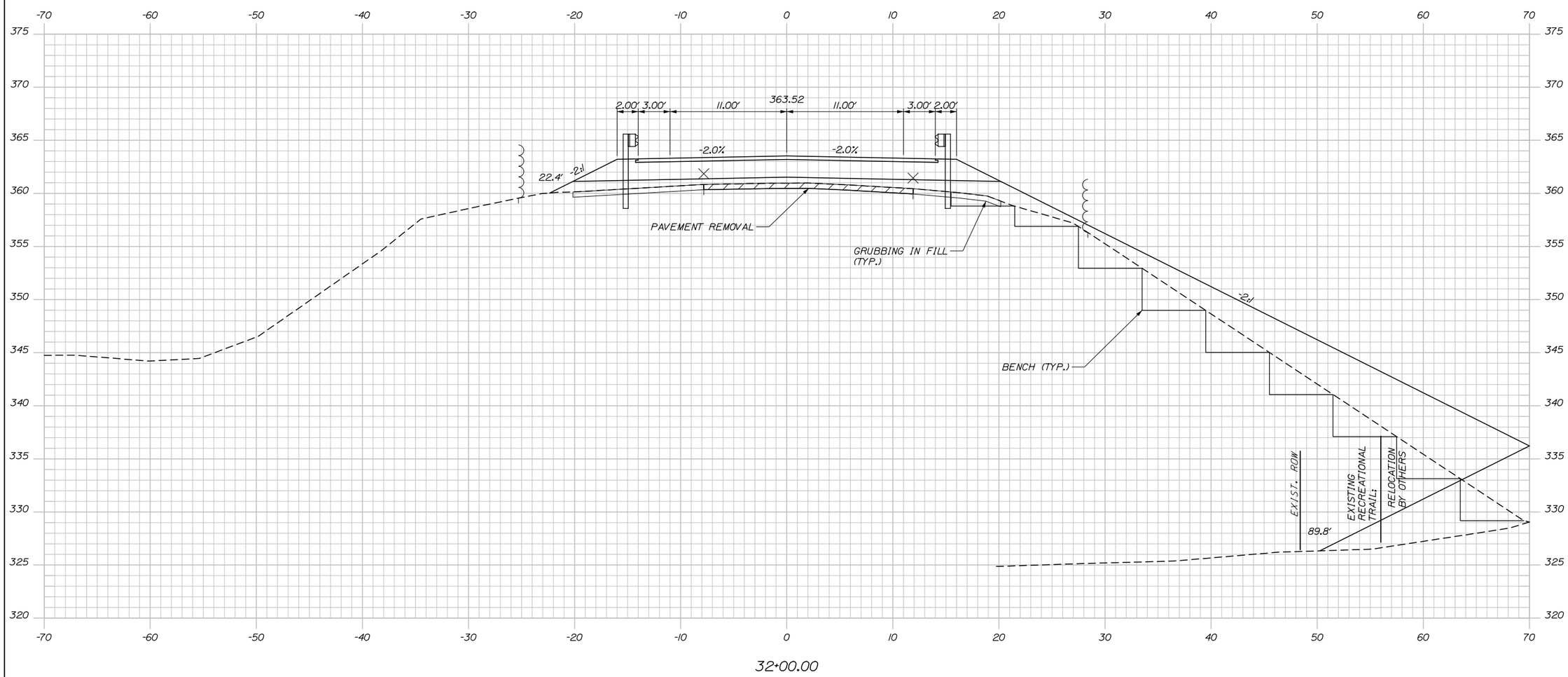

Scale: 5 0 5 10
Scale of Feet

No.	Revision	By	Date

Designed by:

HNTB

CONSULTANT PROJECT MANAGER: Dale. A. Mitchell, P.E.

	By	Date		By	Date
Designed	LZD	11/16	Checked	RWH	11/16
Drawn	SLR	11/16	In Charge of	RAL	11/16

HNTB CORPORATION
340 County Road, Suite 6-C
Westbrook, ME 04092
TEL (207) 774-5155
FAX (207) 228-0909

MAINE TURNPIKE

THE GOLD STAR MEMORIAL HIGHWAY

MTA PROJECT MANAGER: Ralph C. Norwood, IV, P.E., P.T.O.E.

BRIDGE REPLACEMENT
MAXWELL ROAD UNDERPASS

STA. 32+00

SHEET NUMBER: XS-08

CONTRACT:2017.03

Filename: xsecs.dgn

Date:11/10/2016

C=23
F=10
G=7

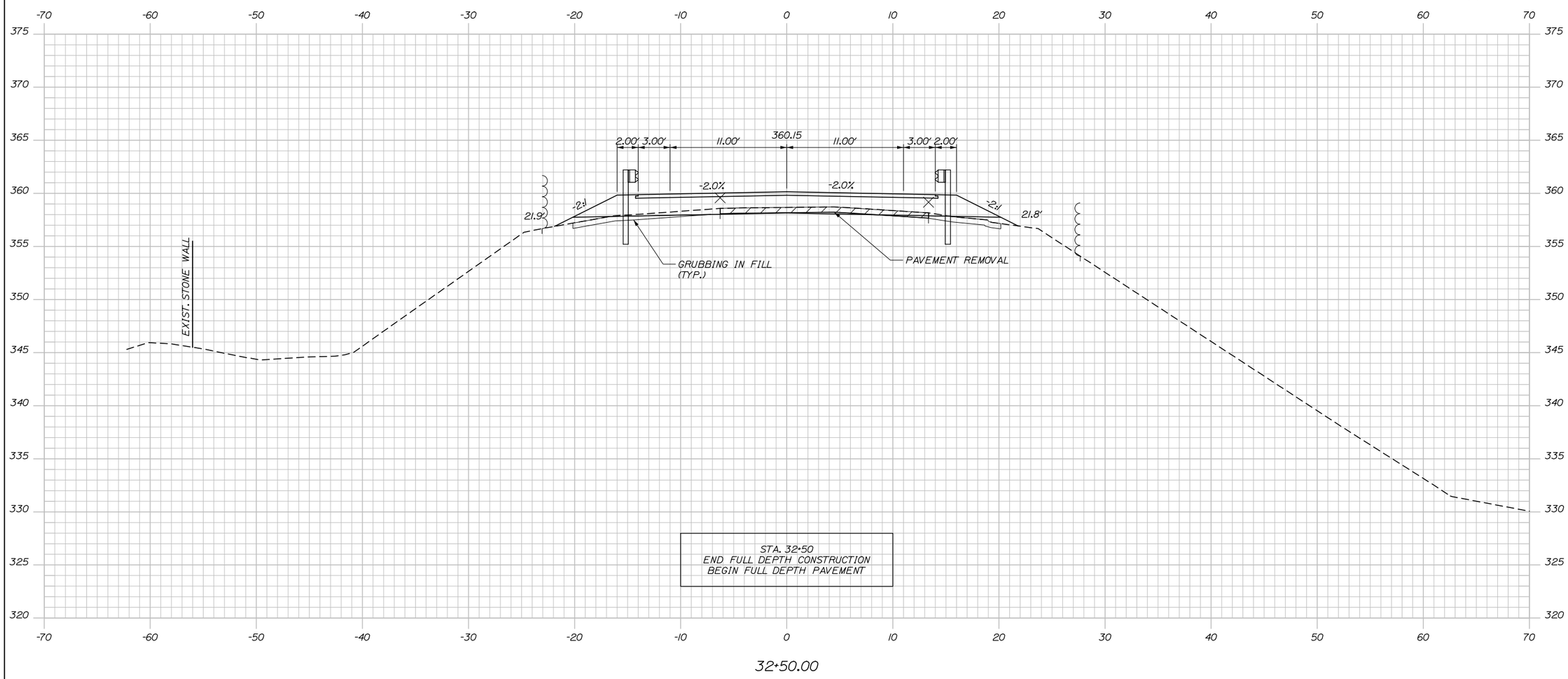

Scale: 5 0 5 10
Scale of Feet

No.	Revision	By	Date

Designed by:

HNTB

CONSULTANT PROJECT MANAGER: Dale. A. Mitchell, P.E.

	By	Date		By	Date
Designed	LZD	11/16	Checked	RWH	11/16
Drawn	SLR	11/16	In Charge of	RAL	11/16

HNTB CORPORATION
340 County Road, Suite 6-C
Westbrook, ME 04092
TEL (207) 774-5155
FAX (207) 228-0909

MAINE TURNPIKE

THE GOLD STAR MEMORIAL HIGHWAY

MTA PROJECT MANAGER: Ralph C. Norwood, IV, P.E., P.T.O.E.

BRIDGE REPLACEMENT
MAXWELL ROAD UNDERPASS

STA. 32+50

SHEET NUMBER: XS-09

CONTRACT:2017.03

Filename: xsecs.dgn

Date:11/10/2016

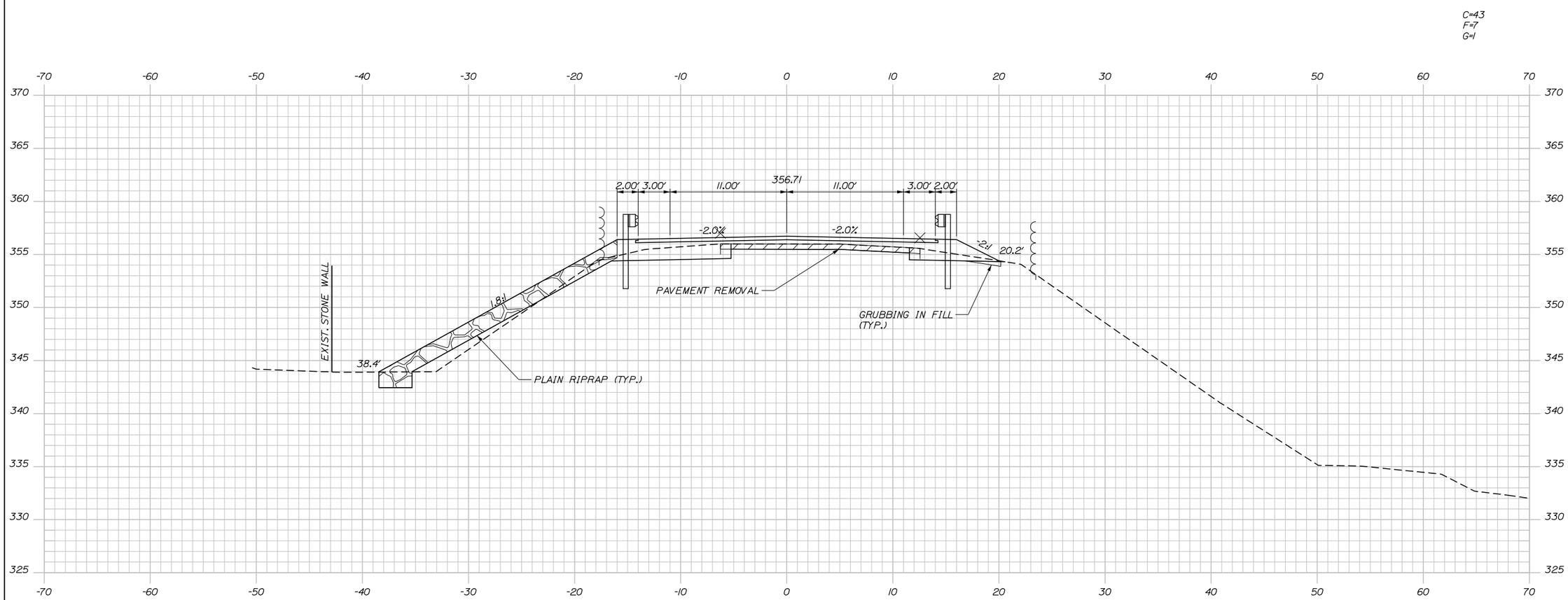

Scale: 5 0 5 10
Scale of Feet

No.	Revision	By	Date

Designed by:

HNTB

CONSULTANT PROJECT MANAGER: Dale. A. Mitchell, P.E.

	By	Date		By	Date
Designed	LZD	11/16	Checked	RWH	11/16
Drawn	SLR	11/16	In Charge of	RAL	11/16

HNTB CORPORATION
340 County Road, Suite 6-C
Westbrook, ME 04092
TEL (207) 774-5155
FAX (207) 228-0909

MAINE TURNPIKE

THE GOLD STAR MEMORIAL HIGHWAY

MTA PROJECT MANAGER: Ralph C. Norwood, IV, P.E., P.T.O.E.

BRIDGE REPLACEMENT
MAXWELL ROAD UNDERPASS

STA. 33+00

SHEET NUMBER: XS-10

CONTRACT:2017.03

Filename: xsecs.dgn

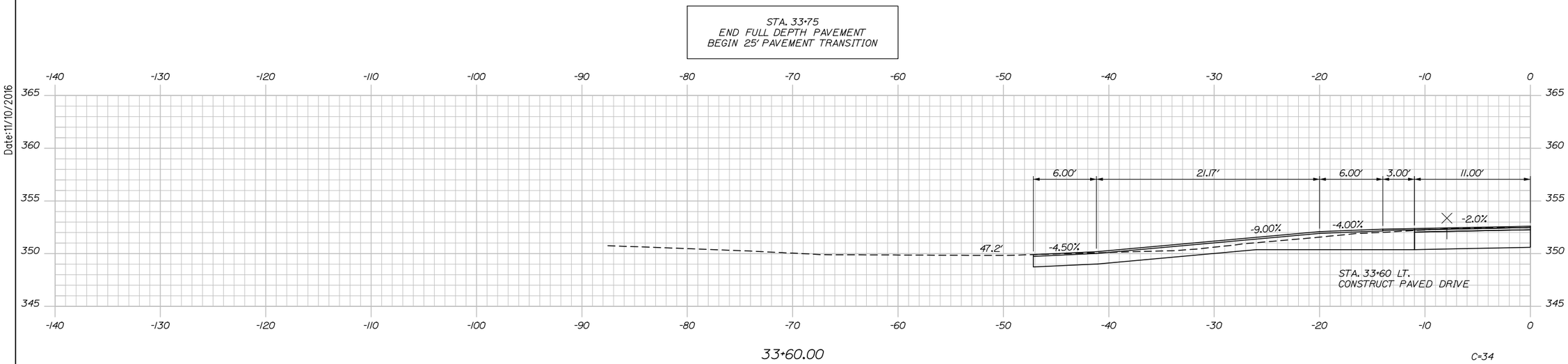

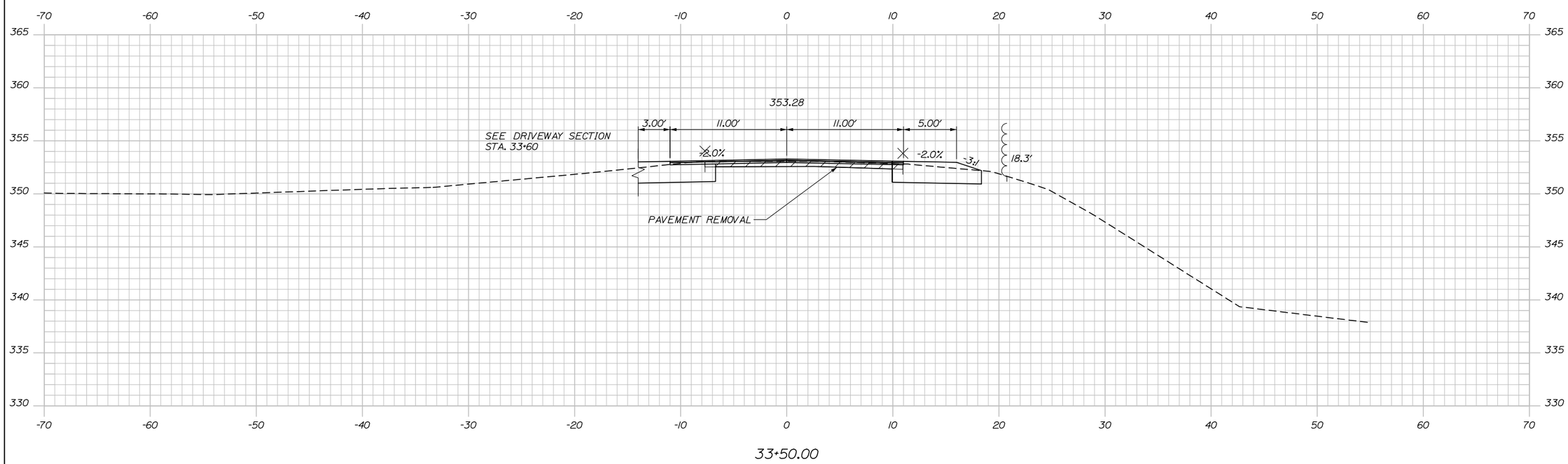

Date:11/10/2016

Scale: 5 0 5 10
Scale of Feet

No.	Revision	By	Date

Designed by:

HNTB

CONSULTANT PROJECT MANAGER: Dale. A. Mitchell, P.E.

	By	Date		By	Date
Designed	LZD	11/16	Checked	RWH	11/16
Drawn	SLR	11/16	In Charge of	RAL	11/16

HNTB CORPORATION
340 County Road, Suite 6-C
Westbrook, ME 04092
TEL (207) 774-5155
FAX (207) 228-0909

MAINE TURNPIKE

THE GOLD STAR MEMORIAL HIGHWAY

MTA PROJECT MANAGER: Ralph C. Norwood, IV, P.E., P.T.O.E.

BRIDGE REPLACEMENT
MAXWELL ROAD UNDERPASS

STA. 33+50 TO STA. 33+60

SHEET NUMBER: XS-11

CONTRACT:2017.03

Filename: xsecs.dgn

Date:11/10/2016

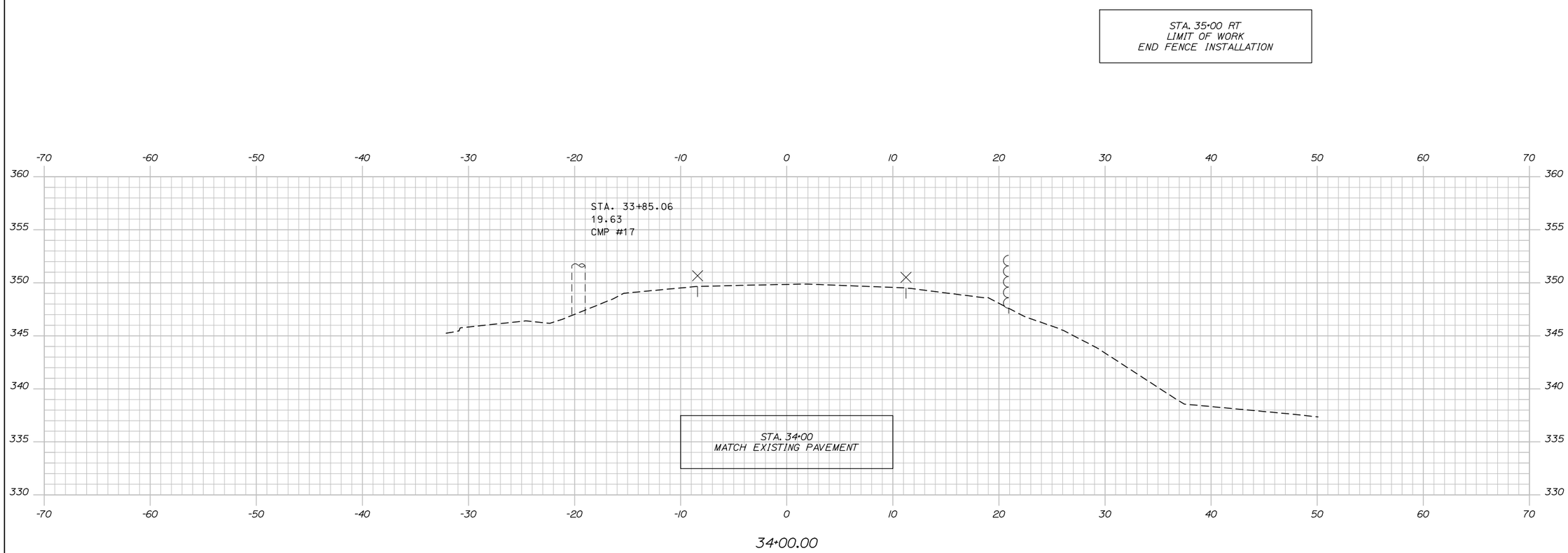

Scale: 5 0 5 10
Scale of Feet

No.	Revision	By	Date

Designed by:

HNTB

CONSULTANT PROJECT MANAGER: Dale. A. Mitchell, P.E.

	By	Date		By	Date
Designed	LZD	11/16	Checked	RWH	11/16
Drawn	SLR	11/16	In Charge of	RAL	11/16

HNTB CORPORATION
340 County Road, Suite 6-C
Westbrook, ME 04092
TEL (207) 774-5155
FAX (207) 228-0909

MAINE TURNPIKE

THE GOLD STAR MEMORIAL HIGHWAY

MTA PROJECT MANAGER: Ralph C. Norwood, IV, P.E., P.T.O.E.

BRIDGE REPLACEMENT
MAXWELL ROAD UNDERPASS

STA. 34+00

SHEET NUMBER: XS-12

CONTRACT:2017.03

Filename: xsecs.dgn

SPECIFICATIONS

DESIGN

AASHTO LRFD BRIDGE DESIGN SPECIFICATIONS, 7TH EDITION, WITH 2016 INTERIM REVISIONS

CONSTRUCTION

STATE OF MAINE, DEPARTMENT OF TRANSPORTATION STANDARD SPECIFICATIONS, HIGHWAYS AND BRIDGES, REVISION OF NOVEMBER 2014.

STATE OF MAINE DEPARTMENT OF TRANSPORTATION STANDARD DETAILS FOR HIGHWAYS AND BRIDGES, REVISON OF NOVEMBER 2014, WITH ALL REVISIONS THERETO.

AASHTO LRFD BRIDGE CONSTRUCTION SPECIFICATIONS, 3RD. EDITION WITH 2016 INTERIMS.

DESIGN LOADING

LIVE LOAD - HL-93 MODIFIED FOR STRENGTH I

MATERIALS

CONCRETE

DECK CONCRETE - CLASS AAA-DECK

ALL OTHER CONCRETE SHALL BE CLASS AAA, U.O.N

REINFORCING STEEL

AASHTO M31, GRADE 60
ALL REINFORCING SHALL BE EPOXY-COATED.

ANCHOR RODS SHALL MEET THE REQUIREMENTS OF ASTM F1554, GRADE 55 AND SHALL BE SWEDGED OR THREADED ON THE EMBEDDED PORTION OF THE ROD.

STRUCTURAL STEEL

WELDED GIRDERS: FLANGES, WEBS, SPLICE PLATES, FILLER PLATES, DIAPHRAGMS AND BEARING STIFFENERS SHALL BE AASHTO M270, GRADE 50W.

ALL OTHER STRUCTURAL STEEL SHALL BE AASHTO M270, GRADE 36.

HIGH STRENGTH BOLTS SHALL BE AASHTO M164 (ASTM A325). BOLTS IN CONTACT WITH UNPAINTED WEATHERING STEEL SHALL BE TYPE 3. ALL OTHER BOLTS SHALL BE HOT DIPPED GALVANIZED TYPE 1.

PROTECTIVE COATING

GIRDER ENDS SHALL BE PAINTED TO A DISTANCE OF 10 FEET ALONG THE LENGTH OF GIRDER FROM THE CENTERLINE OF BEARING AT THE ABUTMENTS IN ACCORDANCE WITH SPECIAL PROVISION, SECTION 506, SHOP APPLIED PROTECTIVE COATING - STEEL (ZINC-RICH SYSTEM - SHOP APPLIED). THE FINISH TOP-COAT COLOR SHALL BE LUSTERLESS BROWN AND MATCH FEDERAL STANDARD 595 B, COLOR NO. 30045. DIAPHRAGMS WITHIN THE PAINTED ZONE SHALL BE PAINTED.

INDEX OF DRAWINGS

PAGE NUMBER	TITLE	SHEET NUMBER
29	GENERAL NOTES, INDEX AND QUANTITIES	S-01
30	BRIDGE GENERAL PLAN AND ELEVATION	S-02
31	BORING LOGS I	S-03
32	BORING LOGS II	S-04
33	BORING LOGS III	S-05
34	SUBSTRUCTURE DEMOLITION AND FOUNDATION PLAN	S-06
35	ABUTMENT PLAN AND ELEVATION	S-07
36	ABUTMENT DETAILS	S-08
37	ABUTMENT REINFORCING	S-09
38	ABUTMENT SECTIONS	S-10
39	PIER PLAN AND ELEVATION	S-11
40	PIER DETAILS	S-12
41	BEARING DETAILS	S-13
42	FRAMING PLAN	S-14
43	STRUCTURAL STEEL DETAILS I	S-15
44	STRUCTURAL STEEL DETAILS II	S-16
45	STRUCTURAL STEEL DETAILS III	S-17
46	SUPERSTRUCTURE PLAN	S-18
47	TYPICAL SECTION	S-19
48	SUPERSTRUCTURE DETAILS	S-20
49	SNOW FENCE DETAILS	S-21
50	BRIDGE RAIL TRANSITION BARRIER	S-22
51	REINFORCING STEEL SCHEDULE	S-23

ORIGINAL CONSTRUCTION PLANS

52 OF 54	AS-BUILT GENERAL PLAN AND ELEVATION
53 OF 54	AS-BUILT SUBSTRUCTURE
54 OF 54	AS-BUILT SUPERSTRUCTURE

ITEM NO.	ITEM DESCRIPTION	SUPPLEMENTAL	UNIT	STRUCTURAL QUANTITY
202.19	Removing Existing Bridge		LS	1
203.25	Granular Borrow		CY	570
206.082	Structural Earth Excavation - Major Structures, Plan Quantity		CY	630
403.208	Hot Mix Asphalt, 12.5 mm Nominal Maximum Size		Ton	110
409.15	Bituminous Tack Coat, Applied		Gal	40
501.231	Dynamic Loading Test		EA	2
501.54	Steel H-beam Piles 117 lb/ft, delivered		LF	316
501.541	Steel H-beam Piles 117 lb/ft, in place		LF	316
501.90	Pile Tips		EA	8
501.91	Pile Splices		EA	8
501.92	Pile Driving Equipment Mobilization		LS	1
502.219	Structural Concrete, Abutments and Retaining Walls	120 CY	LS	1
502.239	Structural Concrete, Pier	106 CY	LS	1
502.26	Structural Concrete Roadway and Sidewalk Slab on Steel Bridges	169 CY	LS	1
502.31	Structural Concrete, Approach Slab	21 CY	LS	1
502.49	Structural Concrete Curbs and Sidewalks	32 CY	LS	1
503.14	Epoxy-Coated Reinforcing Steel, Fabricated and Delivered		LB	95400
503.15	Epoxy-Coated Reinforcing Steel, Placing		LB	95400
504.702	Structural steel, fabricated and delivered, welded	207,000 LB	LS	1
504.71	Structural steel erection	207,000 LB	LS	1
505.08	Shear Connectors	2288 EA	LS	1
506.9102	Zinc Rich Coating System (Shop Applied)		LS	1
507.0821	Steel Bridge Railing, 3 Bar	456 LF	LS	1
508.14	High Performance Waterproofing Membrane	655 SY	LS	1
508.15	Membrane Waterproofing	20 SY	LS	1
511.091	Temporary Earth Support Systems		LS	1
512.081	French Drains	98 LF	LS	1
514.06	Curing Box for Concrete Cylinders		EA	1
515.202	Clear Protective Coating for Concrete Surfaces		SY	510
520.23	Asphaltic Plug Joint		LF	56
523.52	Bearing Installation		EA	4
523.5401	Laminated Elastomeric Bearings, Fixed		EA	4
524.40	Protective Shielding - Steel Girders		SY	765
607.431	Snow Fence		LF	200
609.11	Vertical Curb Type 1		LF	120
619.1401	Erosion Control Mix		CY	43

BASIC DESIGN STRESSES

CONCRETE

CLASS AAA-DECK, f'c = 4,500 P.S.I.
CLASS AAA, f'c = 4,500 P.S.I.

REINFORCING STEEL - fy = 60,000 P.S.I.

STRUCTURAL STEEL

AASHTO M270 (ASTM 709) GRADE 36, Fy = 36,000 P.S.I.
AASHTO M270 (ASTM 709) GRADE 50W, Fy = 50,000 P.S.I.

PRESTRESSING STRANDS - Fu = 270,000 P.S.I.

PRECAST CONCRETE

f'c = 6,000 P.S.I.
f'ci = 4,000 P.S.I.

LIST OF ABBREVIATIONS

ABUT. - ABUTMENT
ADDL. - ADDITIONAL
ALT. - ALTERNATE
APPROX. - APPROXIMATELY
BOT. - BOTTOM
BRG. - BEARING
CL. - CLEAR
℄ - CENTERLINE
CONC. - CONCRETE
CONSTR. - CONSTRUCTION
C.Y. - CUBIC YARD
DEMO. - DEMOLITION
DIA. - DIAMETER
EA. - EACH
EB - EASTBOUND
E.F. - EACH FACE
EL. - ELEVATION
EQ. - EQUAL
EXIST. - EXISTING
EXP. - EXPANSION
F.F. - FAR FACE
JT. - JOINT
MAX. - MAXIMUM
MEDOT - MAINE DEPARTMENT OF TRANSPORTATION
MIN. - MINIMUM
MTA - MAINE TURNPIKE AUTHORITY
NB - NORTHBOUND
N.F. - NEAR FACE
N.T.S. - NOT TO SCALE
PED. - PEDESTAL
PGL - PROFILE GRADE LINE
ℙ - PLATE
PROP. - PROPOSED
P.S.I. - POUNDS per SQUARE INCH
RDWY. - ROADWAY
SHLDR. - SHOULDER
SB - SOUTHBOUND
SF - SQUARE FEET
SP. - SPACES
STA. - STATION
T.&B. - TOP & BOTTOM
TPKE. - TURNPIKE
TYP. - TYPICAL
U.O.N. - UNLESS OTHERWISE NOTED
VERT. - VERTICAL
WB - WESTBOUND
W.P. - WORKING POINT
WW - WINGWALL

NOTES:

1. FOR ADDITIONAL DETAILS REFERENCED OR NOT SHOWN IN THESE DRAWINGS, SEE THE STATE OF MAINE, DEPARTMENT OF TRANSPORTATION STANDARD DETAILS, HIGHWAYS AND BRIDGES, NOVEMBER 2014 WITH UPDATES.
2. COPIES OF THE AS-BUILT PLANS ARE ON FILE AT THE MAINE TURNPIKE AUTHORITY. A PORTION OF THESE PLANS ARE INCLUDED IN THIS CONTRACT FOR THE CONTRACTOR'S CONVENIENCE. THE COMPLETENESS AND ACCURACY OF THESE PLANS IS NOT GUARANTEED.
3. REINFORCING STEEL SHALL HAVE A CLEAR COVER OF 2", UNLESS OTHERWISE NOTED.
4. CHAMFER ALL EXPOSED CONCRETE EDGES ¾" UNLESS OTHERWISE NOTED.
5. THE CONTRACTOR SHALL PROFILE THE TOPS OF THE GIRDERS BEFORE THE FORMWORK IS STARTED AND SHALL SUBMIT TO THE RESIDENT THE FINAL BLOCKING ELEVATIONS FOR REVIEW. FIVE (5) WORKING DAYS SHALL BE ALLOWED FOR THE BLOCKING POINT TURN AROUND TIME.

Date:11/10/2016

Filename: 029_Index.dgn

Scale:

No.	Revision	By	Date

Designed by: HNTB

CONSULTANT PROJECT MANAGER: Dale A. Mitchell, P.E.

	By	Date		By	Date
Designed	JKB	11/16	Checked	JRN	11/16
Drawn	PEB	11/16	In Charge of	RAL	11/16

HNTB CORPORATION
340 County Road, Suite 6-C
Westbrook, ME 04092
TEL (207) 774-5155
FAX (207) 228-0909

MAINE TURNPIKE

THE GOLD STAR MEMORIAL HIGHWAY

MTA PROJECT MANAGER: Ralph C. Norwood IV, P.E., P.T.O.E.

BRIDGE REPLACEMENT
MAXWELL ROAD UNDERPASS

GENERAL NOTES, INDEX AND QUANTITIES

SHEET NUMBER: S-01

CONTRACT:2017.03

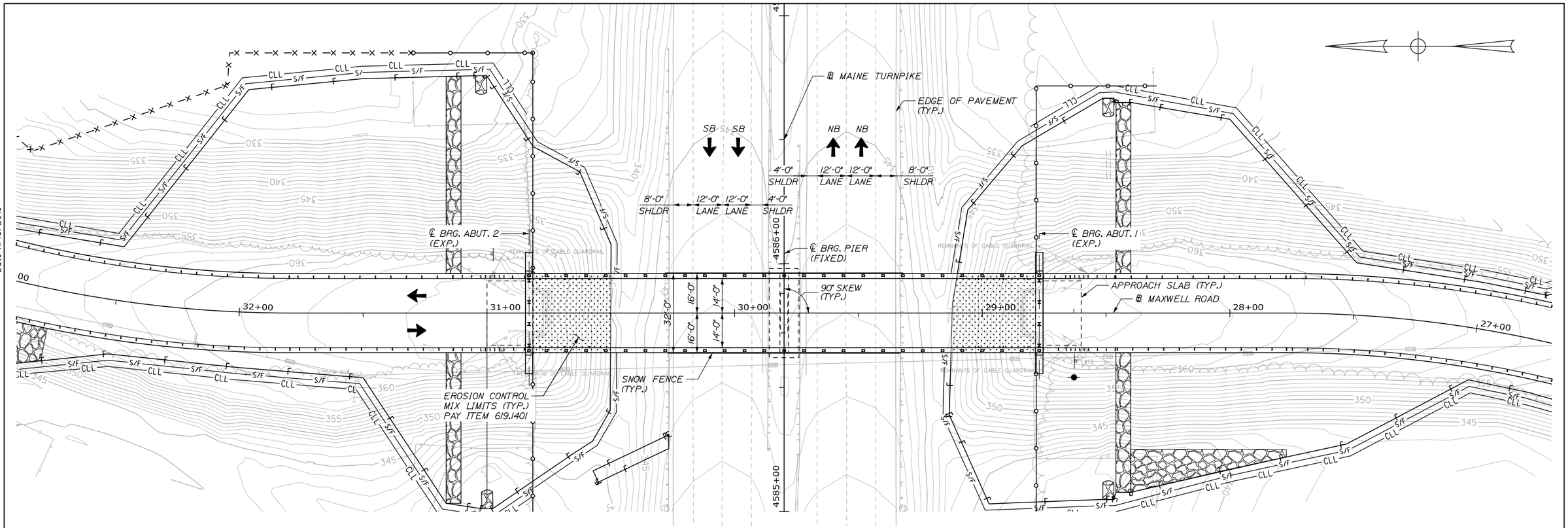

GENERAL PLAN
1" = 20'-0"

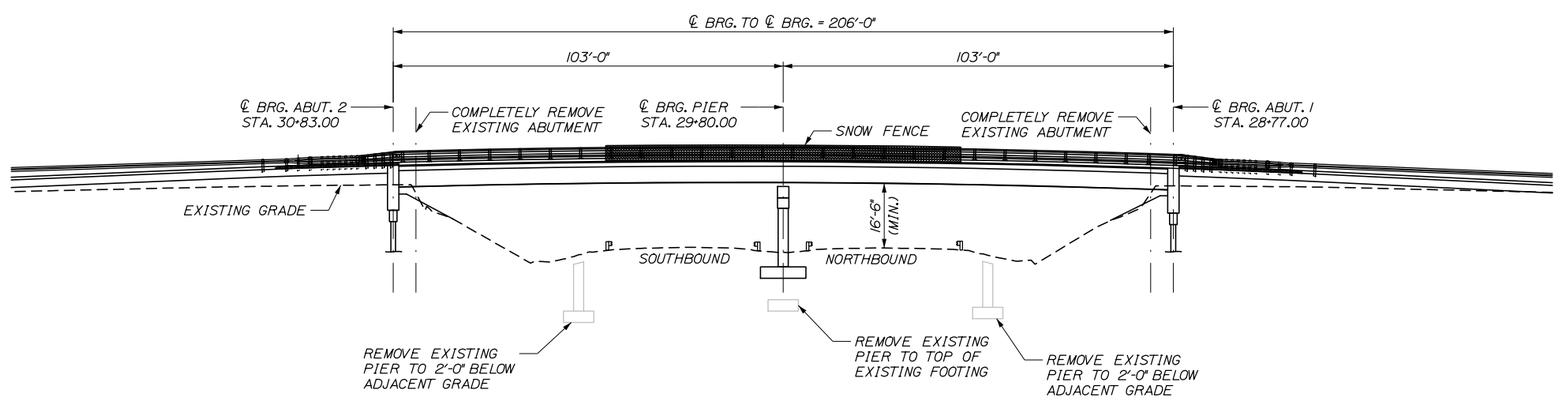

ELEVATION
1" = 20'-0"

Date:11/10/2016

Filename: 030_General Plan and Elevation.dgn

Scale:			
No.	Revision	By	Date

Designed by:

HNTB

CONSULTANT PROJECT MANAGER: Dale A. Mitchell, P.E.

	By	Date		By	Date
Designed	JKB	11/16	Checked	JRN	11/16
Drawn	PEB	11/16	In Charge of	RAL	11/16

HNTB CORPORATION
340 County Road, Suite 6-C
Westbrook, ME 04092
TEL (207) 774-5155
FAX (207) 228-0909

MAINE TURNPIKE

THE GOLD STAR MEMORIAL HIGHWAY

MTA PROJECT MANAGER: Ralph C. Norwood IV, P.E., P.T.O.E.

BRIDGE REPLACEMENT
MAXWELL ROAD UNDERPASS

BRIDGE GENERAL PLAN AND ELEVATION

SHEET NUMBER: S-02

CONTRACT:2017.03

Date:11/10/2016

SCHONEWALD ENGINEERING ASSOCIATES, INC.

PROJECT: Maxwell School Rd Bridge over Maine TPK

LOCATION: Sabattus, Maine

Boring No.: BB-MAX-101

PROJ. NO.: 16-002

Driller:	New England Boring Contractors	**Elevation (ft.)**	363.3 ft	**Auger ID/OD:**	SSA to 5'
Operator:	Dupuis / Maynard	**Datum:**	NAVD88	**Sampler:**	standard split-spoon
Logged By:	Schonewald	**Rig Type:**	Mobile Drill B-53 (truck)	**Hammer Wt./Fall:**	140#/30" (rope and cathead)
Date Start/Finish:	3/9/16; 0730 - 3/10/16; 0805	**Drilling Method:**	cased wash boring	**Core Barrel:**	NQ2
Boring Location:	9.0' S of South Aout; 0.4' LT	**Casing ID/OD:**	4" (HW)	**Water Level*:**	27.2' (open to 30')

IN-SITU SAMPLING AND TESTING:
D = Split Spoon Sample
MD = Unsuccessful Split Spoon Sample attempt
U = Thin Wall Tube Sample
MU = Unsuccessful Thin Wall Tube Sample attempt
V = Insitu Vane Shear Test
MV = Unsuccessful Insitu Vane Shear Test attempt

ADDITIONAL DEFINITIONS:
S_u = Insitu Field Vane Shear Strength (psf)
R = Rock Core Sample
RQD = Rock Quality Designation (%)
WOH = weight of 140lb. hammer
WOR = weight of rods
-- = not recorded

BOREHOLE ADVANCEMENT METHOD:
SSA= solid stem auger / RC=roller cone

LABORATORY TEST RESULTS:
LL=Liquid Limit / PL=Plastic Limit / PI=Plasticity Index
WC = water content, percent
-#200 = percent fines from grain size analysis
UCT qp = peak compressive strength of rock

Depth (ft.)	Sample No.	Pen./Rec. (in.)	Sample Depth (ft.)	Blows (/6 in.) Shear Strength (psf) or RQD (%)	N-value	Casing Blows	Elevation (ft.)	Graphic Log	Visual Description and Remarks	Lab. Testing Results
0						SSA	363.1		2 inches HMA (0.2)	
	1D	24/8	2.0 - 4.0	8-8-9-10	17				1D: Reddish-brown, damp, m. dense, fine to medium SAND, little to some Gravel, trace to little Silt, trace coarse Sand. FILL	
5	2D	24/0	5.0 - 7.0	10-10-8-7	18	20			2D: No recovery. Wash in spoon; possibly opened void below casing when washed out.	
						25				
						26				
						21				
						29				
10	3D	24/10	10.0 - 12.0	17-11-10-17	21	25			3D: Light brown, m. dense, fine to medium SAND, little to some Silt. FILL	SM A-2-4(0) 24% -#200
						49				
						46				
						52				
						43				
15	4D	24/11	15.0 - 17.0	11-11-11-9	22	25			4D: Light brown, m. dense, fine to medium SAND, trace Silt. FILL	
						19				
						15				
						13				
						34				
20	5D	24/11	20.0 - 22.0	15-16-22-25	38	28			5D: Reddish-brown, dense, fine to medium SAND, little to some Gravel, trace to little Silt, trace coarse Sand. FILL	corrosivity series
						56				
						63				
						69				
25						66				

Remarks:

Stratification lines represent approximate boundaries between soil types; transitions may be gradual.

* Water level readings have been made at times and under conditions stated. Groundwater fluctuations may occur due to conditions other than those present at the time measurements were made.

SCHONEWALD ENGINEERING ASSOCIATES, INC.

PROJECT: Maxwell School Rd Bridge over Maine TPK

LOCATION: Sabattus, Maine

Boring No.: BB-MAX-101

PROJ. NO.: 16-002

Driller:	New England Boring Contractors	**Elevation (ft.)**	363.3 ft	**Auger ID/OD:**	SSA to 5'
Operator:	Dupuis / Maynard	**Datum:**	NAVD88	**Sampler:**	standard split-spoon
Logged By:	Schonewald	**Rig Type:**	Mobile Drill B-53 (truck)	**Hammer Wt./Fall:**	140#/30" (rope and cathead)
Date Start/Finish:	3/9/16; 0730 - 3/10/16; 0805	**Drilling Method:**	cased wash boring	**Core Barrel:**	NQ2
Boring Location:	9.0' S of South Aout; 0.4' LT	**Casing ID/OD:**	4" (HW)	**Water Level*:**	27.2' (open to 30')

IN-SITU SAMPLING AND TESTING:
D = Split Spoon Sample
MD = Unsuccessful Split Spoon Sample attempt
U = Thin Wall Tube Sample
MU = Unsuccessful Thin Wall Tube Sample attempt
V = Insitu Vane Shear Test
MV = Unsuccessful Insitu Vane Shear Test attempt

ADDITIONAL DEFINITIONS:
S_u = Insitu Field Vane Shear Strength (psf)
R = Rock Core Sample
RQD = Rock Quality Designation (%)
WOH = weight of 140lb. hammer
WOR = weight of rods
-- = not recorded

BOREHOLE ADVANCEMENT METHOD:
SSA= solid stem auger / RC=roller cone

LABORATORY TEST RESULTS:
LL=Liquid Limit / PL=Plastic Limit / PI=Plasticity Index
WC = water content, percent
-#200 = percent fines from grain size analysis
UCT qp = peak compressive strength of rock

Depth (ft.)	Sample No.	Pen./Rec. (in.)	Sample Depth (ft.)	Blows (/6 in.) Shear Strength (psf) or RQD (%)	N-value	Casing Blows	Elevation (ft.)	Graphic Log	Visual Description and Remarks	Lab. Testing Results
25	6D	24/9	25.0 - 27.0	16-15-7-6	22	30			6D: Light brown, m. dense, fine to medium SAND, little Gravel, trace to little Silt, trace coarse Sand. FILL	
						20				
						30				
						34	334.3		(29.0)	
						53				
30	7D	16/10	30.0 - 31.3	52-70-50/4"	>120	RC			7D: Brown-grey, v. dense, fine to medium SAND, some Gravel, little Silt, trace coarse Sand. TILL (native)	SM A-2-4(0) 16% -#200
									Very difficult advancement with roller cone.	
35	8D	1/0	35.0 - 35.1	50/1"	--		328.1		8D: Split-spoon refusal; no recovery. Advance casing to 35.2' and flush. (35.2)	
	R1	38/28	35.2 - 38.4	RQD: 0"=0%					R1: Hard, slightly weathered, fine to medium grained, light grey-brown, GRANOFELS, with significant biotite, muscovite, and horneblende in feldspar- rich zones. Very close to close, horizontal and one vertical breaks (joints); undulating, rough, typically discolored and weathered, and open, with significant sand infilling. Significant water loss and poor recovery suggest large open fractures; no sudden drops noted. Core times: 1:25 / 1:05 / 0:45 / -- min:sec/ft.	
	R2	40/26	38.4 - 41.7	RQD: 10"=25%					R2: Same as R1, except no vertical joint and less sand infilling. Core times: -- / 1:25 / 0:45 / -- min:sec/ft.	
40										
	R3	48/27	41.7 - 45.7	RQD: 9"=19%					R3: Same as R2, except less discoloration of joint surfaces. Lose approximately 500 gallons drill water. Core times: 2:15 / 5:25 / 5:40 / 8:31 min:sec/ft.	
45							317.6		(45.7) **Bottom of Exploration at 45.7 feet below ground surface.**	
50										

Remarks:

Stratification lines represent approximate boundaries between soil types; transitions may be gradual.

* Water level readings have been made at times and under conditions stated. Groundwater fluctuations may occur due to conditions other than those present at the time measurements were made.

Filename: 031_ Boring Log 1.dgn

Scale:

No.	Revision	By	Date

Designed by:

HNTB

CONSULTANT PROJECT MANAGER: Dale A. Mitchell, P.E.

	By	Date		By	Date
Designed	JKB	11/16	Checked	JRN	11/16
Drawn	PEB	11/16	In Charge of	RAL	11/16

HNTB CORPORATION
340 County Road, Suite 6-C
Westbrook, ME 04092
TEL (207) 774-5155
FAX (207) 228-0909

MAINE TURNPIKE

THE GOLD STAR MEMORIAL HIGHWAY

MTA PROJECT MANAGER: Ralph C. Norwood IV, P.E., P.T.O.E.

BRIDGE REPLACEMENT
MAXWELL ROAD UNDERPASS

BORING LOGS I

SHEET NUMBER: S-03

CONTRACT:2017.03

Schonewald Engineering Associates, Inc.

PROJECT: Maxwell School Rd Bridge over Maine TPK

LOCATION: Sabattus, Maine

Boring No.: BB-MAX-102

PROJ. NO.: 16-002

Driller:	New England Boring Contractors	**Elevation (ft.)**	345.0 ft	**Auger ID/OD:**	SSA to 10'
Operator:	Enos / Share	**Datum:**	NAVD88	**Sampler:**	standard split-spoon
Logged By:	Schonewald	**Rig Type:**	Mobile Drill B-53 (track)	**Hammer Wt./Fall:**	140#/30" (rope and cathead)
Date Start/Finish:	3/11/16; 1000 - 3/11/16; 1245	**Drilling Method:**	cased wash boring	**Core Barrel:**	NQ2
Boring Location:	CL median; 14.8' E of pier	**Casing ID/OD:**	telescope 3" (NW) inside 4" (HW)	**Water Level*:**	9.0' (open to 24.4')

IN-SITU SAMPLING AND TESTING:
D = Split Spoon Sample
MD = Unsuccessful Split Spoon Sample attempt
U = Thin Wall Tube Sample
MU = Unsuccessful Thin Wall Tube Sample attempt
V = Insitu Vane Shear Test
MV = Unsuccessful Insitu Vane Shear Test attempt

ADDITIONAL DEFINITIONS:
S_u = Insitu Field Vane Shear Strength (psf)
R = Rock Core Sample
RQD = Rock Quality Designation (%)
WOH = weight of 140lb. hammer
WOR = weight of rods
-- = not recorded

BOREHOLE ADVANCEMENT METHOD:
SSA= solid stem auger / RC=roller cone

LABORATORY TEST RESULTS:
LL=Liquid Limit / PL=Plastic Limit / PI=Plasticity Index
WC = water content, percent
-#200 = percent fines from grain size analysis
UCT qp = peak compressive strength of rock

Depth (ft.)	Sample No.	Pen./Rec. (in.)	Sample Depth (ft.)	Blows (/6 in.) Shear Strength (psf) or RQD (%)	N-value	Casing Blows	Elevation (ft.)	Graphic Log	Visual Description and Remarks	Lab. Testing Results
0						SSA			Grass median.	
	1D	24/13	2.0 - 4.0	10-18-29-30	47				1D: Reddish-brown, moist, dense, fine to medium SAND, some Gravel, little Silt, trace coarse Sand. FILL	
5	2D	18/16	5.0 - 6.5	12-47-106	153		339.3		2D: Reddish-brown, moist, fine to coarse SAND, little to some Gravel, little Silt. FILL (5.7) Changing at 5.7 ft to Grey-brown, damp, Gravelly fine to medium SAND, trace to little Silt, trace coarse Sand. TILL (native) [composite sample]	
10	3D	24/13	10.0 - 12.0	29-68-41-60	109	35			3D: Grey-brown and white, wet, v. dense, fine to coarse SAND, some Gravel, little to some Silt. TILL	SM A-1-b 19% -#200
						98				
						132				
						56				
15						68				
	4D R1	11/6 65/59	15.0 - 15.9 15.9 - 21.3	65-50/5" RQD: 32"=49%	--		329.1		14.7 ft BGS: Possible weathered rock based on drilling behavior. 4D: Grey-brown, fine to coarse Sandy GRAVEL. Gravel appears to be subangular pieces of bedrock. 15.9 ft BGS: Casing refusal. (15.9) R1: Hard, typically fresh, fine to medium grained, light grey-brown, mica rich GRANOFELS with occasional garnet crystals and quartzite veining. Close to moderately spaced, typically near horizontal breaks (joints); typically discolored, undulating, rough, partially open to open, with some mud and sand infilling. Open fracture from 17.2 to 17.4 ft; weathered fracture from 17.8 to 18.0 ft. Core times: 1:40 / 1:10 / 1:15 / 1:35 / 1:35 min:sec/ft.	18.5-18.9 ft UCT qp= 7,028 psi
20	R2	55/55	21.3 - 25.9	RQD: 50"=91%					R2: Same as R1, except fresh joint surfaces. Weathered fracture at 22.1 ft. Core times: 1:05 / 1:10 / 1:15 / 1:15 / -- min:sec/ft.	
25										

Remarks:

Stratification lines represent approximate boundaries between soil types; transitions may be gradual.

* Water level readings have been made at times and under conditions stated. Groundwater fluctuations may occur due to conditions other than those present at the time measurements were made.

Schonewald Engineering Associates, Inc.

PROJECT: Maxwell School Rd Bridge over Maine TPK

LOCATION: Sabattus, Maine

Boring No.: BB-MAX-102

PROJ. NO.: 16-002

Driller:	New England Boring Contractors	**Elevation (ft.)**	345.0 ft	**Auger ID/OD:**	SSA to 10'
Operator:	Enos / Share	**Datum:**	NAVD88	**Sampler:**	standard split-spoon
Logged By:	Schonewald	**Rig Type:**	Mobile Drill B-53 (track)	**Hammer Wt./Fall:**	140#/30" (rope and cathead)
Date Start/Finish:	3/11/16; 1000 - 3/11/16; 1245	**Drilling Method:**	cased wash boring	**Core Barrel:**	NQ2
Boring Location:	CL median; 14.8' E of pier	**Casing ID/OD:**	telescope 3" (NW) inside 4" (HW)	**Water Level*:**	9.0' (open to 24.4')

IN-SITU SAMPLING AND TESTING:
D = Split Spoon Sample
MD = Unsuccessful Split Spoon Sample attempt
U = Thin Wall Tube Sample
MU = Unsuccessful Thin Wall Tube Sample attempt
V = Insitu Vane Shear Test
MV = Unsuccessful Insitu Vane Shear Test attempt

ADDITIONAL DEFINITIONS:
S_u = Insitu Field Vane Shear Strength (psf)
R = Rock Core Sample
RQD = Rock Quality Designation (%)
WOH = weight of 140lb. hammer
WOR = weight of rods
-- = not recorded

BOREHOLE ADVANCEMENT METHOD:
SSA= solid stem auger / RC=roller cone

LABORATORY TEST RESULTS:
LL=Liquid Limit / PL=Plastic Limit / PI=Plasticity Index
WC = water content, percent
-#200 = percent fines from grain size analysis
UCT qp = peak compressive strength of rock

Depth (ft.)	Sample No.	Pen./Rec. (in.)	Sample Depth (ft.)	Blows (/6 in.) Shear Strength (psf) or RQD (%)	N-value	Casing Blows	Elevation (ft.)	Graphic Log	Visual Description and Remarks	Lab. Testing Results
25							319.1		(25.9) **Bottom of Exploration at 25.9 feet below ground surface.**	
30										
35										
40										
45										
50										

Remarks:

Stratification lines represent approximate boundaries between soil types; transitions may be gradual.

* Water level readings have been made at times and under conditions stated. Groundwater fluctuations may occur due to conditions other than those present at the time measurements were made.

Date:11/10/2016

Filename: 032_ Boring Log 2.dgn

Scale:

No.	Revision	By	Date

Designed by:

HNTB

CONSULTANT PROJECT MANAGER: Dale A. Mitchell, P.E.

	By	Date		By	Date
Designed	JKB	11/16	Checked	JRN	11/16
Drawn	PEB	11/16	In Charge of	RAL	11/16

HNTB CORPORATION
340 County Road, Suite 6-C
Westbrook, ME 04092
TEL (207) 774-5155
FAX (207) 228-0909

MAINE TURNPIKE

THE GOLD STAR MEMORIAL HIGHWAY

MTA PROJECT MANAGER: Ralph C. Norwood IV, P.E., P.T.O.E.

BRIDGE REPLACEMENT
MAXWELL ROAD UNDERPASS

BORING LOGS II

SHEET NUMBER: S-04

CONTRACT:2017.03

SCHONEWALD ENGINEERING ASSOCIATES, INC.

PROJECT: Maxwell School Rd Bridge over Maine TPK

LOCATION: Sabattus, Maine

Boring No.: BB-MAX-103

PROJ. NO.: 16-002

Driller:	New England Boring Contractors	**Elevation (ft.)**	363.6 ft	**Auger ID/OD:**	SSA to 5'
Operator:	Dupuis / Maynard	**Datum:**	NAVD88	**Sampler:**	standard split-spoon
Logged By:	Schonewald	**Rig Type:**	Mobile Drill B-53 (truck)	**Hammer Wt./Fall:**	140#/30" (rope and cathead)
Date Start/Finish:	3/10/16; 0810 - 3/11/16; 1015	**Drilling Method:**	cased wash boring	**Core Barrel:**	NQ2
Boring Location:	9.0' N of North Abut; CL	**Casing ID/OD:**	3" (NW)	**Water Level*:**	not recorded

IN-SITU SAMPLING AND TESTING:
D = Split Spoon Sample
MD = Unsuccessful Split Spoon Sample attempt
U = Thin Wall Tube Sample
MU = Unsuccessful Thin Wall Tube Sample attempt
V = Insitu Vane Shear Test
MV = Unsuccessful Insitu Vane Shear Test attempt

ADDITIONAL DEFINITIONS:
S_u = Insitu Field Vane Shear Strength (psf)
R = Rock Core Sample
RQD = Rock Quality Designation (%)
WOH = weight of 140lb. hammer
WOR = weight of rods
-- = not recorded

BOREHOLE ADVANCEMENT METHOD:
SSA= solid stem auger / RC=roller cone

LABORATORY TEST RESULTS:
LL=Liquid Limit / PL=Plastic Limit / PI=Plasticity Index
WC = water content, percent
-#200 = percent fines from grain size analysis
UCT qp = peak compressive strength of rock

Depth (ft.)	Sample No.	Pen./Rec. (in.)	Sample Depth (ft.)	Blows (/6 in.) Shear Strength (psf) or RQD (%)	N-value	Casing Blows	Elevation (ft.)	Graphic Log	Visual Description and Remarks	Lab. Testing Results
0						SSA	363.4		2" HMA (0.2)	
	1D	24/11	2.0 - 4.0	7-6-3-5	9				1D: Light brown, damp, loose, Gravelly fine to medium SAND, trace to little Silt, trace coarse Sand. FILL	
5	2D	24/10	5.0 - 7.0	14-14-6-5	20	12			2D: Light brown, dry, m. dense, Gravelly fine to medium SAND, trace to little Silt, trace coarse Sand. FILL	
						13				
						12				
						12				
						14				
10	3D	24/6	10.0 - 12.0	6-5-3-4	8	11			3D: Light brown, loose, fine to medium SAND, trace to little Silt, trace coarse Sand. FILL	
						12				
						20				
						22				
						14				
15	4D	24/9	15.0 - 17.0	6-11-14-12	25	5			4D: Light brown, m. dense, fine to medium SAND, little to some Silt. FILL	SM A-2-4(0) 20% -#200
						17				
						19				
						19				
						21				
20	5D	24/7	20.0 - 22.0	4-5-15-18	20	5			5D: Light brown, m. dense, fine to medium SAND, little fine Gravel, trace to little Silt, trace coarse Sand. FILL	
						24				
						42				
						30				
25						29				

Remarks:

Stratification lines represent approximate boundaries between soil types; transitions may be gradual.

* Water level readings have been made at times and under conditions stated. Groundwater fluctuations may occur due to conditions other than those present at the time measurements were made.

SCHONEWALD ENGINEERING ASSOCIATES, INC.

PROJECT: Maxwell School Rd Bridge over Maine TPK

LOCATION: Sabattus, Maine

Boring No.: BB-MAX-103

PROJ. NO.: 16-002

Driller:	New England Boring Contractors	**Elevation (ft.)**	363.6 ft	**Auger ID/OD:**	SSA to 5'
Operator:	Dupuis / Maynard	**Datum:**	NAVD88	**Sampler:**	standard split-spoon
Logged By:	Schonewald	**Rig Type:**	Mobile Drill B-53 (truck)	**Hammer Wt./Fall:**	140#/30" (rope and cathead)
Date Start/Finish:	3/10/16; 0810 - 3/11/16; 1015	**Drilling Method:**	cased wash boring	**Core Barrel:**	NQ2
Boring Location:	9.0' N of North Abut; CL	**Casing ID/OD:**	3" (NW)	**Water Level*:**	not recorded

IN-SITU SAMPLING AND TESTING:
D = Split Spoon Sample
MD = Unsuccessful Split Spoon Sample attempt
U = Thin Wall Tube Sample
MU = Unsuccessful Thin Wall Tube Sample attempt
V = Insitu Vane Shear Test
MV = Unsuccessful Insitu Vane Shear Test attempt

ADDITIONAL DEFINITIONS:
S_u = Insitu Field Vane Shear Strength (psf)
R = Rock Core Sample
RQD = Rock Quality Designation (%)
WOH = weight of 140lb. hammer
WOR = weight of rods
-- = not recorded

BOREHOLE ADVANCEMENT METHOD:
SSA= solid stem auger / RC=roller cone

LABORATORY TEST RESULTS:
LL=Liquid Limit / PL=Plastic Limit / PI=Plasticity Index
WC = water content, percent
-#200 = percent fines from grain size analysis
UCT qp = peak compressive strength of rock

Depth (ft.)	Sample No.	Pen./Rec. (in.)	Sample Depth (ft.)	Blows (/6 in.) Shear Strength (psf) or RQD (%)	N-value	Casing Blows	Elevation (ft.)	Graphic Log	Visual Description and Remarks	Lab. Testing Results
25	6D	24/16	25.0 - 27.0	5-8-16-23	24	16			6D: Light brown, m. dense, fine to medium SAND, little fine Gravel, trace to little Silt, trace coarse Sand. FILL	
						39				
						68				
						93				
						112				
30	7D	24/15	30.0 - 32.0	25-31-20-7	51	27			7D: Grey-brown, v. dense. Gravelly fine to coarse SAND, little to some Silt, with possible pieces of brick. FILL Changing at 31.9 ft to 7D-A: Brown, fine Sandy Organic Silt; likely original ground.	
						40				
						38	331.6		(32.0)	
						30				
						62				
35	8D	24/15	35.0 - 37.0	34-27-37-26	64	RC			8D: Grey-brown, v. dense, fine to medium SAND, little to some Silt, little Gravel, trace coarse Sand; gravel appears to be subangular pieces of bedrock. TILL	SM A-2-4(0) 24% -#200
	R1	60/58	38.7 - 43.7	RQD: 33"=55%			325.0		38.6 ft BGS: Roller cone refusal. (38.6)	
40									R1: Hard, fresh to slightly weathered, fine to medium grained, light grey-brown GRANOFELS, with medium to coarse grained white QUARTZITE intrusion from 39.2 to 41.4 ft. Close to moderately spaced, near horizontal breaks (joints); undulating, rough, typically fresh but with sand grit, and open to moderately wide. Core times: 2:05 / 2:40 / 2:20 / 1:15 / 1:30 min:sec/ft.	
	R2	7/2	43.7 - 44.3	RQD: 0"=0%					R2: short piece GRANOFELS	
45	R3	53/50	44.3 - 48.7	RQD: 10"/17"=59%					R3 and R3A (recore): Same as GRANOFELS portion of R1. Recored from 45.7 to 48. 8 ft to retrieve core sample; core heavily broken in process. R3 core times: -- / 1:05 / 1:45 / 2:00 / 2: 25 min:sec/ft.	
	R3A			recore						
							314.9		(48.7)	
50									**Bottom of Exploration at 48.7 feet below ground surface.**	

Remarks:

Stratification lines represent approximate boundaries between soil types; transitions may be gradual.

* Water level readings have been made at times and under conditions stated. Groundwater fluctuations may occur due to conditions other than those present at the time measurements were made.

Date:11/10/2016

Filename: 033_ Boring Log 3.dgn

Scale:

No.	Revision	By	Date

Designed by:

HNTB

CONSULTANT PROJECT MANAGER: Dale A. Mitchell, P.E.

	By	Date		By	Date
Designed	JKB	11/16	Checked	JRN	11/16
Drawn	PEB	11/16	In Charge of	RAL	11/16

HNTB CORPORATION
340 County Road, Suite 6-C
Westbrook, ME 04092
TEL (207) 774-5155
FAX (207) 228-0909

MAINE TURNPIKE

THE GOLD STAR MEMORIAL HIGHWAY

MTA PROJECT MANAGER: Ralph C. Norwood IV, P.E., P.T.O.E.

BRIDGE REPLACEMENT
MAXWELL ROAD UNDERPASS

BORING LOGS III

SHEET NUMBER: S-05

CONTRACT:2017.03

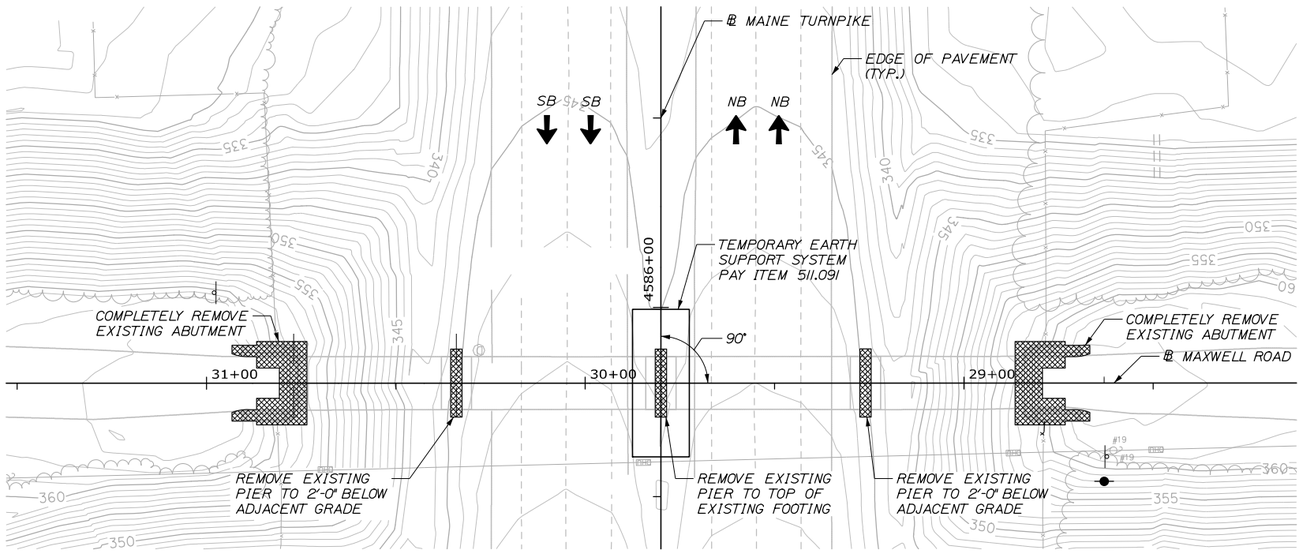

SUBSTRUCTURE DEMOLITION PLAN

1" = 20'-0"

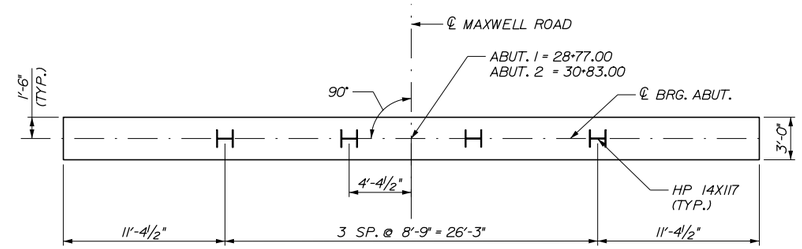

PILE LAYOUT PLAN

3/16" = 1'-0"

DEMOLITION NOTES:

1. EXISTING SUBSTRUCTURE ELEMENTS SHALL BE REMOVED TO LIMITS SHOWN. STRUCTURAL EXCAVATION SHALL BE INCIDENTAL TO PAY ITEM 202.19, EXCEPT AS NOTED.
2. AREAS OF REMOVAL FOR SUBSTRUCTURE SHALL BE BACKFILLED WITH GRANULAR BORROW. ONLY THE VOLUME OF GRANULAR BORROW EQUAL TO THE VOLUME OF CONCRETE REMOVED SHALL BE MEASURED FOR PAYMENT AT THE EXISTING PIERS 1 AND 3. NO GRANULAR BORROW FOR THE EXISTING ABUTMENTS SHALL BE MEASURED FOR PAYMENT.
3. STRUCTURAL EXCAVATION AT THE MEDIAN PIER INSIDE THE TEMPORARY EARTH SUPPORT SYSTEM DOWN TO THE TOP OF THE EXISTING FOOTING SHALL BE INCIDENTAL TO PAY ITEM 511.091.
4. GRANULAR BORROW BACKFILL INSIDE THE TEMPORARY EARTH SUPPORT SYSTEM ABOVE THE TOP OF EXISTING FOOTING SHALL BE MEASURED FOR PAYMENT UNDER PAY ITEM 203.25.
5. TEMPORARY EARTH SUPPORT STRUCTURES SHALL BE PROVIDED IN ACCORDANCE WITH SPECIAL PROVISION 511. PAYMENT FOR TEMPORARY EARTH SUPPORT STRUCTURES SHALL BE MADE UNDER PAY ITEM 511.091.

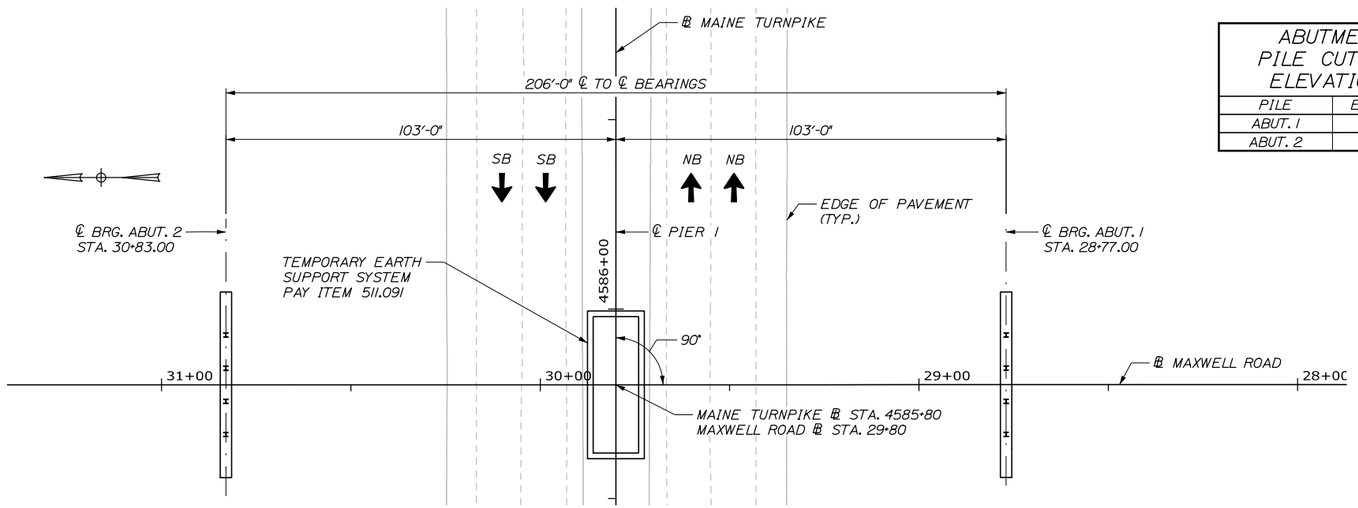

FOUNDATION PLAN

1" = 20'-0"

ABUTMENT PILE CUT-OFF ELEVATIONS	
PILE	ELEVATION
ABUT. 1	359.78
ABUT. 2	360.54

PILE NOTES:

1. THE MAXIMUM CALCULATED FACTORED AXIAL PILE LOAD IS 367 KIPS.
2. H-PILE MATERIAL SHALL BE ASTM A 572, GRADE 50.
3. ESTIMATE OF PILES REQUIRED (INCLUDES EXTRA 5 FEET PER PILE AS CONTINGENCY):

   ABUTMENT NO. 1: 4 ~ HP 14X117 @ 37 FEET
   ABUTMENT NO. 2: 4 ~ HP 14X117 @ 42 FEET

4. ALL PILES SHALL BE EQUIPPED WITH A PILE TIP IN ACCORDANCE WITH STANDARD SPECIFICATION SECTION 501.90, PILE TIPS.
5. INSTALL PILES TO ACHIEVE A NOMINAL COMPRESSIVE GEOTECHNICAL RESISTANCE OF 565 KIPS.
6. PILES SHALL NOT BE OUT OF POSITION SHOWN BY MORE THAN 2 INCHES IN ANY DIRECTION.
7. THE CONTRACTOR SHALL PERFORM AND SUBMIT A WAVE EQUATION ANALYSIS FOR REVIEW AND ACCEPTANCE BY THE RESIDENT. THE MAXIMUM ALLOWABLE DRIVING STRESS IS 0.90 TIMES FY. THE SUBMITTAL ANALYSES SHALL INCLUDE THE PROPOSED STOPPING CRITERIA BASED ON THE WAVE EQUATION ANALYSIS AND THE PROPOSED DRIVING SYSTEM. THE STOPPING CRITERIA SHALL INCLUDE THE BLOWS PER INCH AND THE NUMBER OF 1-IN. INTERVALS AT WHICH PILE INSTALLATION MAY BE TERMINATED. THE COST OF PERFORMING THE WAVE EQUATION ANALYSIS WILL BE CONSIDERED INCIDENTAL TO PAY ITEM 501.92.
8. THE CONTRACTOR SHALL PERFORM 2 DYNAMIC LOAD TEST(S), ONE AT EACH ABUTMENT, TO CONFIRM THE ULTIMATE CAPACITY OF THE PILES. THE REQUIRED NOMINAL RESISTANCE FOR THE PILE IS THE FACTORED AXIAL PILE LOAD DIVIDED BY A RESISTANCE FACTOR OF 0.65 PER LRFD SPECIFICATIONS. THE DYNAMIC TEST SHALL BE PERFORMED ON THE FIRST PRODUCTION PILE DRIVEN AT EACH ABUTMENT.
9. THE TEMPORARY BEARING PEDESTALS, INCLUDING STUDS OR FASTENERS, LEVELING PLATES AND ANY ASSOCIATED HARDWARE AND LABOR REQUIRED FOR INSTALLATION SHALL NOT BE PAID FOR DIRECTLY. PAYMENT SHALL BE INCIDENTAL TO PAY ITEM 502.219.

Date:11/10/2016

Filename: 034_Demolition and Foundation Plan.dgn

Scale:

No.	Revision	By	Date

Designed by:

HNTB

CONSULTANT PROJECT MANAGER: Dale A. Mitchell, P.E.

	By	Date		By	Date
Designed	JKB	11/16	Checked	JRN	11/16
Drawn	PEB	11/16	In Charge of	RAL	11/16

HNTB CORPORATION
340 County Road, Suite 6-C
Westbrook, ME 04092
TEL (207) 774-5155
FAX (207) 228-0909

MAINE TURNPIKE

THE GOLD STAR MEMORIAL HIGHWAY

MTA PROJECT MANAGER: Ralph C. Norwood IV, P.E., P.T.O.E.

BRIDGE REPLACEMENT
MAXWELL ROAD UNDERPASS

SUBSTRUCTURE DEMOLITION AND FOUNDATION PLAN

SHEET NUMBER: S-06

CONTRACT:2017.03

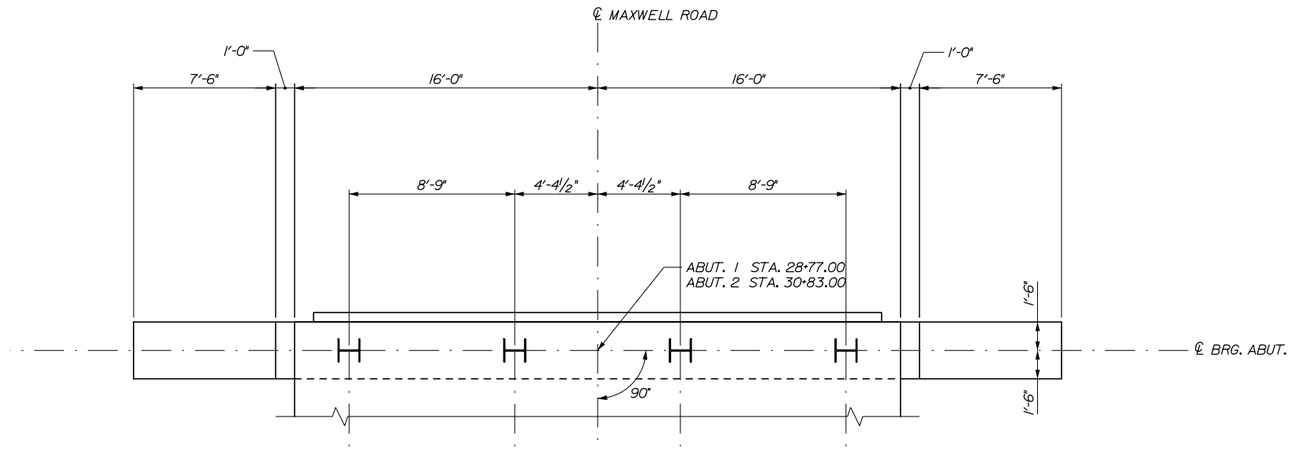

ABUTMENT 1 & 2 PLAN

1/4" = 1'-0"

ABUTMENT NOTES:

1. ALL ELEVATIONS ARE PROVIDED AT CENTERLINE OF BEARING UNLESS OTHERWISE NOTED.
2. PLACE 4 INCH DIAMETER DRAINS IN BREASTWALL AND WINGWALLS AT 8 FEET MAXIMUM SPACING. THE EXACT LOCATION WILL BE DETERMINED BY THE RESIDENT.
3. ABUTMENTS AND WINGWALLS SHALL BE BACKFILLED WITH GRANULAR BORROW FOR UNDERWATER BACKFILL. PAY LIMITS WILL BE THE STRUCTURAL EXCAVATION LIMITS IN CUT AREAS AND A VERTICAL PLANE LOCATED 10 FEET BEHIND THE WALLS IN FILL AREAS.
4. PAYMENT FOR CONCRETE JACKET AROUND THE TOPS OF THE H-PILES WILL NOT BE PAID FOR DIRECTLY. PAYMENT SHALL BE INCIDENTAL TO PAY ITEM 502.219. FILL CONCRETE MAY BE USED FOR THE CONCRETE JACKETS.
5. ABUTMENTS 1 & 2 ARE SYMMETRIC ABOUT CENTERLINE OF ROADWAY.
6. ALL EXPOSED SURFACES OF ABUTMENT SHALL BE COATED WITH CLEAR PROTECTIVE COATING FOR CONCRETE SURFACES. ITEM 515.202.

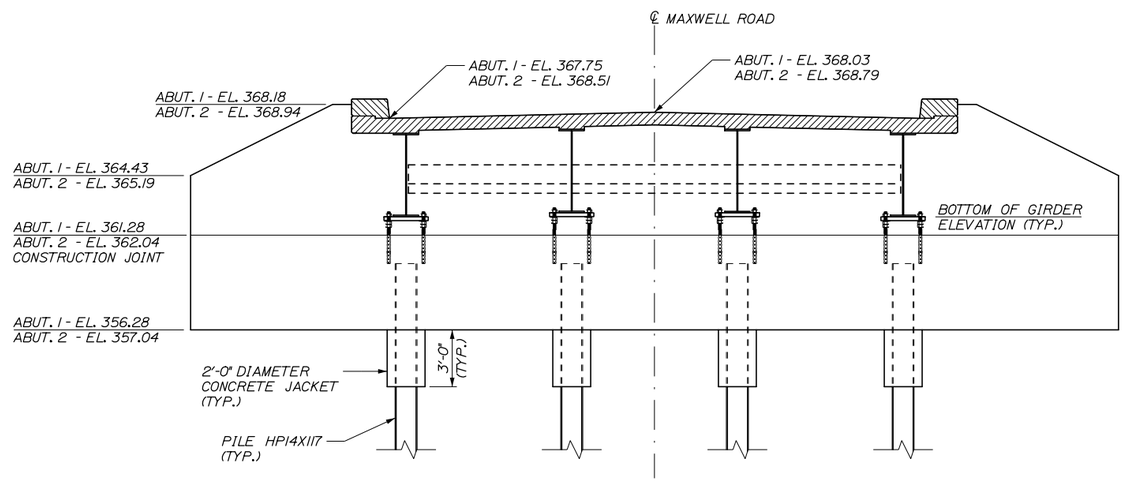

ABUTMENT 1 & 2 ELEVATION

1/4" = 1'-0"

ABUTMENT 1 BOTTOM OF GIRDER ELEVATIONS	
GIRDER	ELEVATION
G1	362.28
G2	362.46
G3	362.46
G4	362.28

ABUTMENT 2 BOTTOM OF GIRDER ELEVATIONS	
GIRDER	ELEVATION
G1	363.04
G2	363.22
G3	363.22
G4	363.04

Date:11/10/2016

Filename: 035_Abutment Plan.dgn

Scale:

No.	Revision	By	Date

Designed by:

HNTB

CONSULTANT PROJECT MANAGER: Dale A. Mitchell, P.E.

	By	Date		By	Date
Designed	JKB	11/16	Checked	JRN	11/16
Drawn	PEB	11/16	In Charge of	RAL	11/16

HNTB CORPORATION
340 County Road, Suite 6-C
Westbrook, ME 04092
TEL (207) 774-5155
FAX (207) 228-0909

MAINE TURNPIKE

THE GOLD STAR MEMORIAL HIGHWAY

MTA PROJECT MANAGER: Ralph C. Norwood IV, P.E., P.T.O.E.

BRIDGE REPLACEMENT
MAXWELL ROAD UNDERPASS

ABUTMENT PLAN AND ELEVATION

SHEET NUMBER: S-07

CONTRACT:2017.03

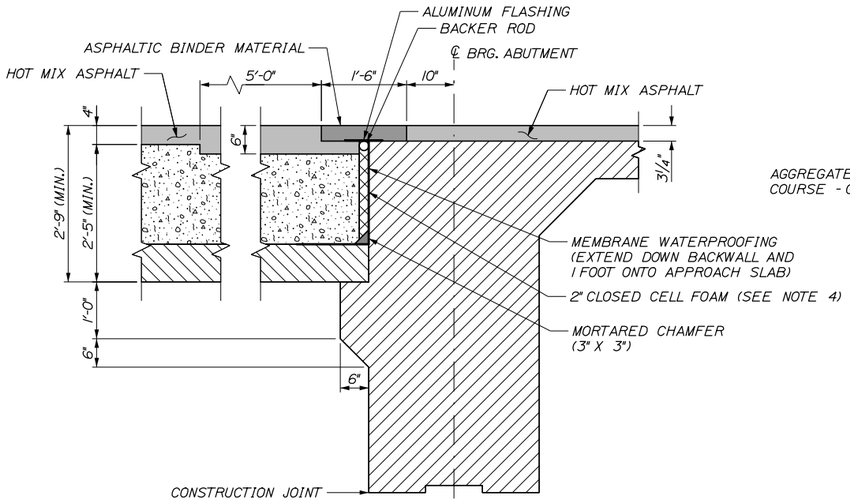

ABUTMENT CORBEL AND JOINT DETAIL

¾" = 1'-0"

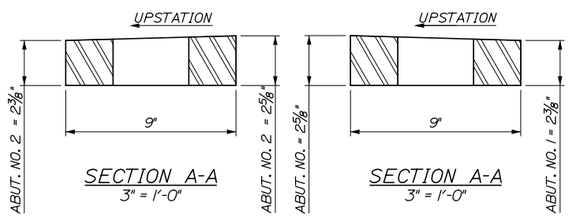

SECTION A-A

3" = 1'-0"

SECTION A-A

3" = 1'-0"

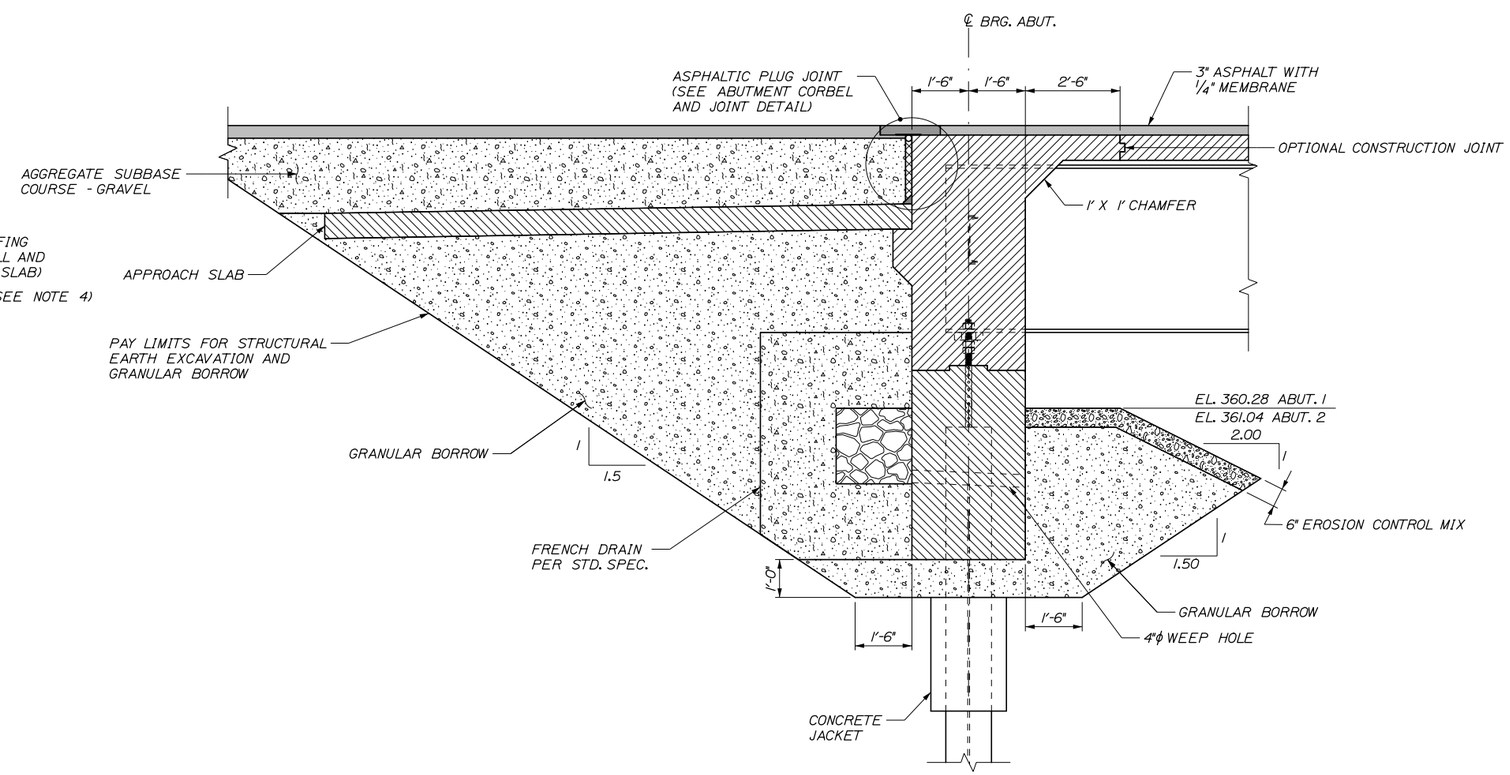

ABUTMENT BACKFILL DETAIL

½" = 1'-0"

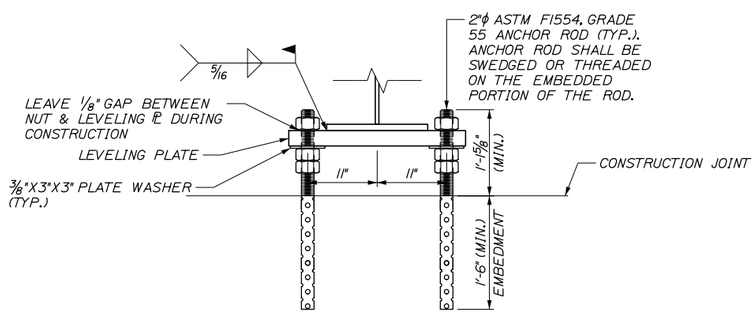

GIRDER SUPPORT DETAIL

1" = 1'-0"

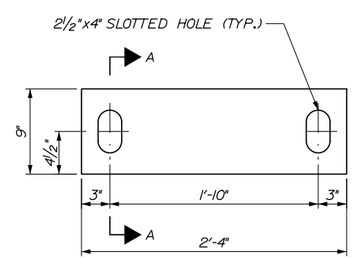

LEVELING PLATE

1½" = 1'-0"

NOTES:

1. ASPHALTIC PLUG JOINT MATERIALS SHALL MEET THE REQUIREMENTS OF THE PROJECT SPECIFICATIONS AND SHALL BE INSTALLED IN ACCORDANCE WITH THE MANUFACTURER'S RECOMMENDATIONS.
2. ASPHALTIC PLUG JOINTS SHALL BE INSTALLED AFTER THE SECOND LIFT OF PAVEMENT IS INSTALLED. CARE SHALL BE TAKEN BY THE CONTRACTOR TO AVOID DAMAGING THE MEMBRANE DURING JOINT INSTALLATION AS OUTLINED IN SPECIAL PROVISION SECTION 520.
3. THE JOINT AREA SHALL BE CLEANED IN ACCORDANCE WITH THE MANUFACTURER'S RECOMMENDATIONS.
4. CLOSE CELL FOAM SHALL NOT BE MEASURED FOR PAYMENT, BUT SHALL BE INCIDENTAL TO PAY ITEM 520.23.
5. SAW CUT IN PAVEMENT SHALL BE SEALED WITH EMULSIFIED ASPHALT SEALING COMPOUND CONFORMING TO SPECIFICATION 702.12.
6. ALL COSTS RELATED TO THE MORTARED CHAMFER ON THE APPROACH SLAB WILL NOT BE PAID FOR DIRECTLY BUT WILL BE CONSIDERED INCIDENTAL TO THE RELATED CONTRACT ITEMS.
7. CONSTRUCT APPROACH SLAB IN ACCORDANCE WITH MAINEDOT STANDARD DETAILS PAGE 502(02).

Date:11/10/2016

Filename: 036_Abutment Details.dgn

Scale:

No.	Revision	By	Date

Designed by:

HNTB

CONSULTANT PROJECT MANAGER: Dale A. Mitchell, P.E.

	By	Date		By	Date
Designed	JKB	11/16	Checked	JRN	11/16
Drawn	PEB	11/16	In Charge of	RAL	11/16

HNTB CORPORATION
340 County Road, Suite 6-C
Westbrook, ME 04092
TEL (207) 774-5155
FAX (207) 228-0909

MAINE TURNPIKE

THE GOLD STAR MEMORIAL HIGHWAY

MTA PROJECT MANAGER: Ralph C. Norwood IV, P.E., P.T.O.E.

BRIDGE REPLACEMENT
MAXWELL ROAD UNDERPASS

ABUTMENT DETAILS

SHEET NUMBER: S-08

CONTRACT:2017.03

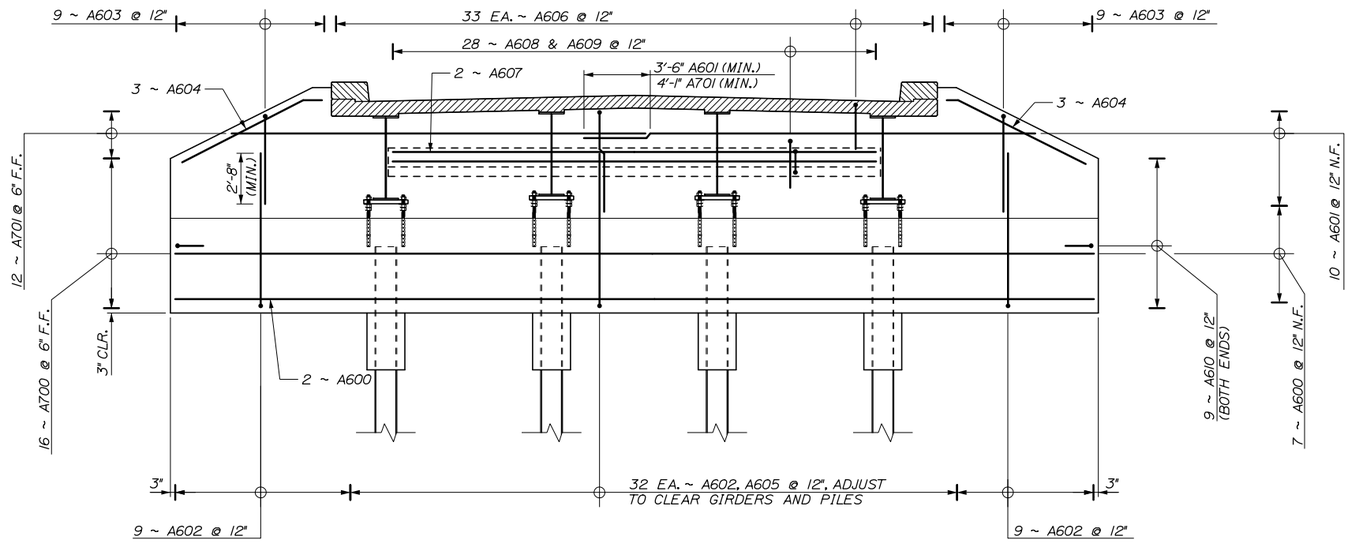

ABUTMENT 1 REINFORCING

1/4" = 1'-0"

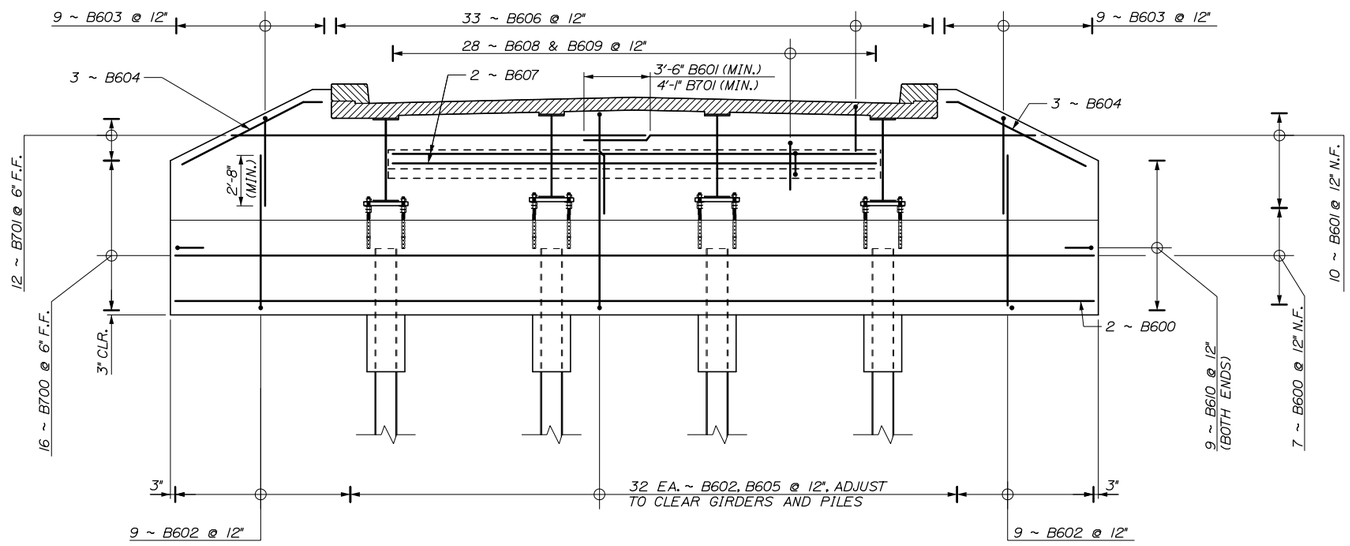

ABUTMENT 2 REINFORCING

1/4" = 1'-0"

Date:11/10/2016

Filename: 037_Abutment Reinforcing.dgn

Scale:

No.	Revision	By	Date

Designed by:

HNTB

CONSULTANT PROJECT MANAGER: Dale A. Mitchell, P.E.

	By	Date		By	Date
Designed	JKB	11/16	Checked	JRN	11/16
Drawn	PEB	11/16	In Charge of	RAL	11/16

HNTB CORPORATION
340 County Road, Suite 6-C
Westbrook, ME 04092
TEL (207) 774-5155
FAX (207) 228-0909

MAINE TURNPIKE

THE GOLD STAR MEMORIAL HIGHWAY

MTA PROJECT MANAGER: Ralph C. Norwood IV, P.E., P.T.O.E.

BRIDGE REPLACEMENT
MAXWELL ROAD UNDERPASS

ABUTMENT REINFORCING

SHEET NUMBER: S-09

CONTRACT:2017.03

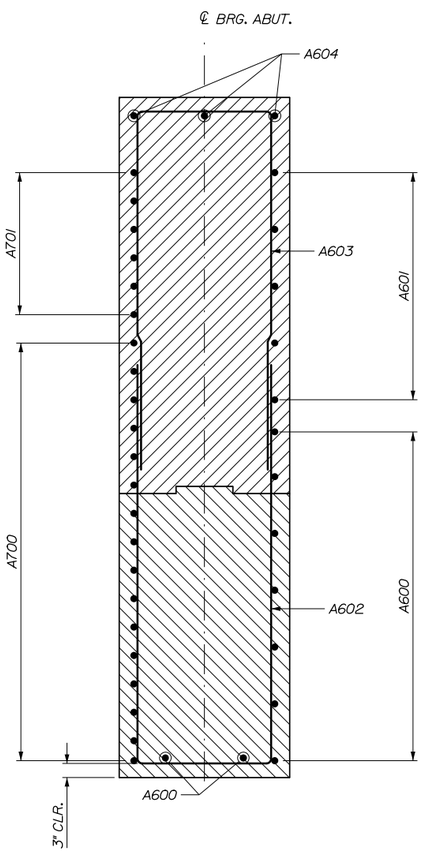

ABUTMENT 1 WINGWALL SECTION

3/4" = 1'-0"

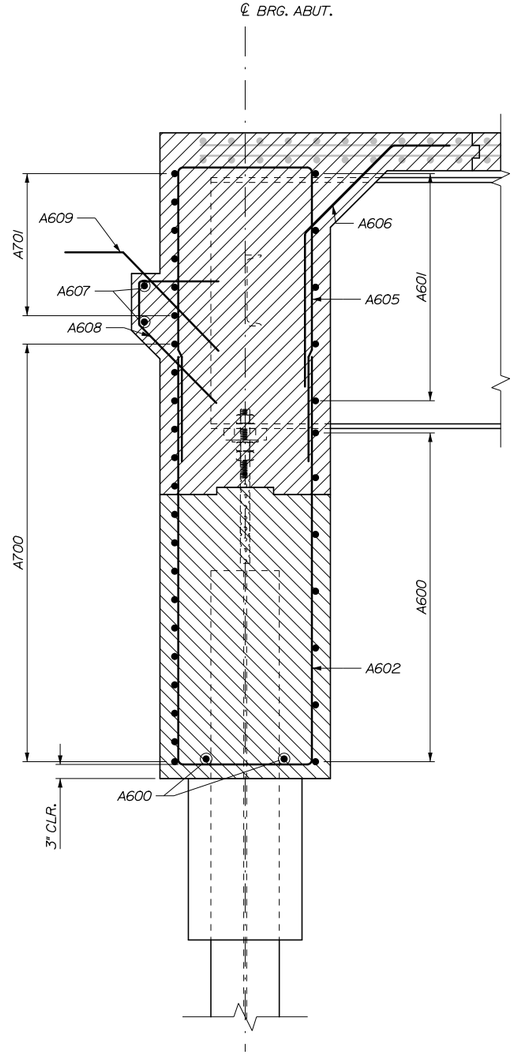

ABUTMENT 1 SECTION

3/4" = 1'-0"

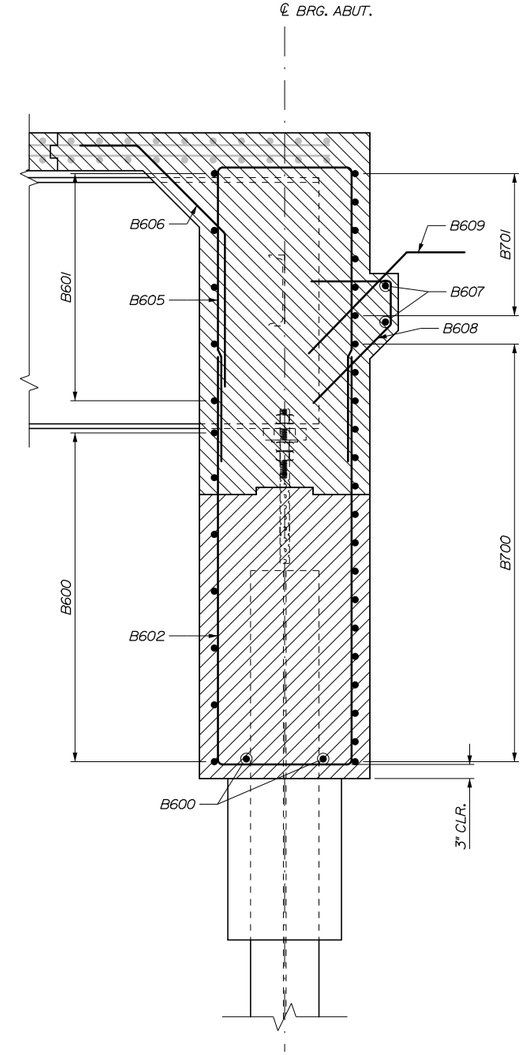

ABUTMENT 2 SECTION

3/4" = 1'-0"

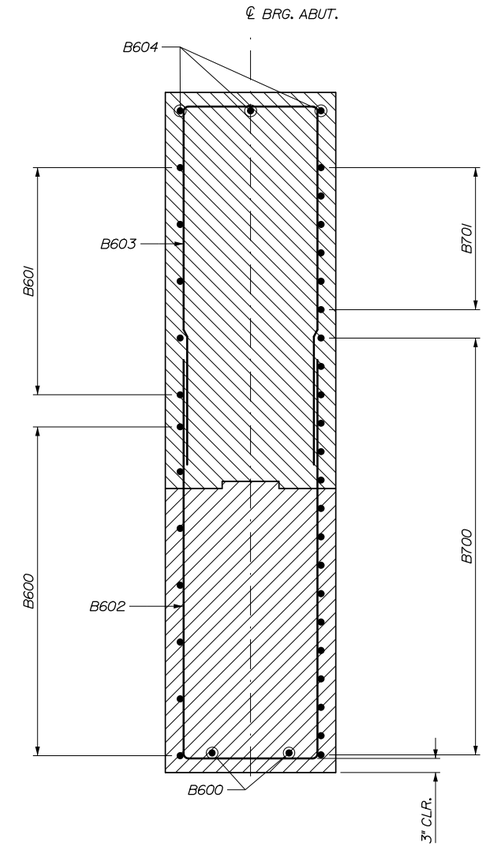

ABUTMENT 2 WINGWALL SECTION

3/4" = 1'-0"

NOTES:

1. DECK REINFORCING SHOWN SCREENED FOR CLARITY.

Date:11/10/2016

Filename: 038_Abutment Sections.dgn

Scale:

No.	Revision	By	Date

Designed by:

HNTB

CONSULTANT PROJECT MANAGER: Dale A. Mitchell, P.E.

	By	Date		By	Date
Designed	JKB	11/16	Checked	JRN	11/16
Drawn	PEB	11/16	In Charge of	RAL	11/16

HNTB CORPORATION
340 County Road, Suite 6-C
Westbrook, ME 04092
TEL (207) 774-5155
FAX (207) 228-0909

MAINE TURNPIKE

THE GOLD STAR MEMORIAL HIGHWAY

MTA PROJECT MANAGER: Ralph C. Norwood IV, P.E., P.T.O.E.

BRIDGE REPLACEMENT
MAXWELL ROAD UNDERPASS

ABUTMENT SECTIONS

SHEET NUMBER: S-10

CONTRACT:2017.03

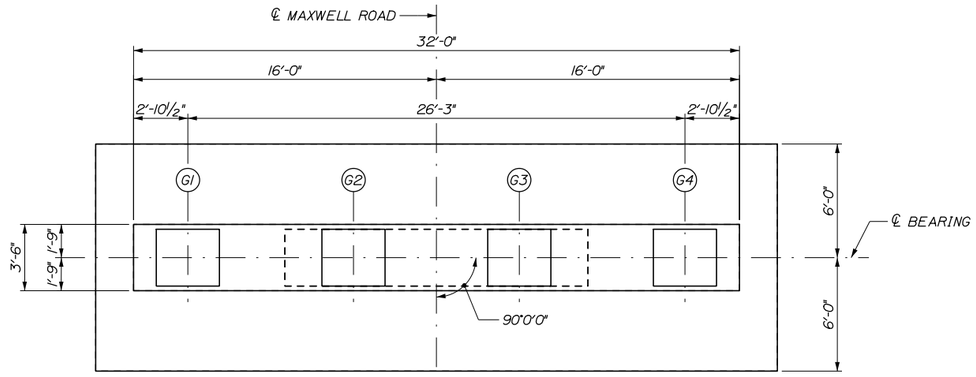

PIER PLAN
1/4" = 1'-0"

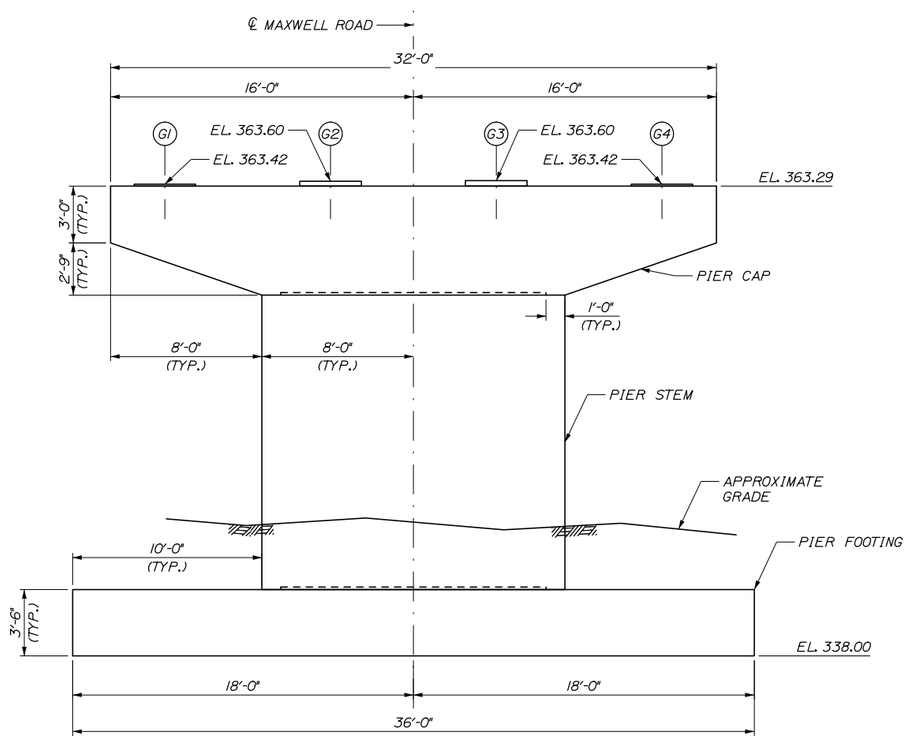

PIER ELEVATION
1/4" = 1'-0"

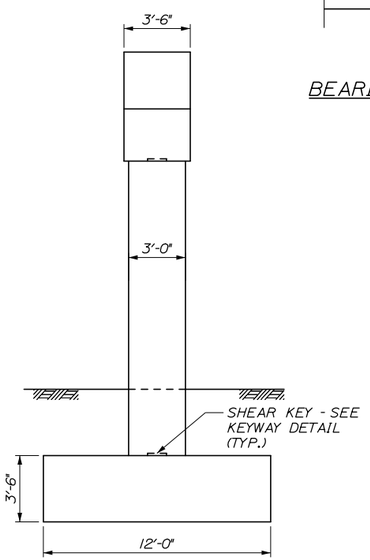

TYPICAL SECTION
1/4" = 1'-0"

PIER NOTES:

1. ALL EXPOSED PIER SURFACES SHALL BE COATED WITH CLEAR PROTECTIVE COATING FOR CONCRETE SURFACES. AFTER CONSTRUCTION IS COMPLETED AND MATERIAL HAS CURED. ITEM 512.202. PROTECTIVE COATING SHALL EXTEND TO 6 INCHES BELOW GRADE.
2. PIER REINFORCING SHALL HAVE 3 INCHES MINIMUM COVER UNLESS OTHERWISE NOTED. BOTTOM MAT OF FOOTING SHALL HAVE 4 INCHES MINIMUM COVER.
3. CONCRETE BEARING PEDESTALS SHALL BE CAST MONOLITHICALLY WITH THE PIER CAP.
4. THE CONTRACTOR SHALL SURVEY THE SOLID YELLOW LANE LINES OF THE MAINE TURNPIKE AT 10 FOOT INTERVALS EXTENDING 50 FEET EAST AND WEST OF THE MAXWELL ROAD CENTERLINE PRIOR TO INSTALLATION OF THE TEMPORARY EARTH SUPPORT STRUCTURE. THE POINTS SHALL BE RE-SURVEYED AFTER PIER CONSTRUCTION IS COMPLETE AND THE TEMPORARY EARTH SUPPORT STRUCTURE IS REMOVED. THE CONTRACTOR SHALL BE RESPONSIBLE FOR REPAIRING ANY SETTLEMENT OF THE NORTHBOUND AND SOUTHBOUND ROADWAY GREATER THAN ½ INCH RESULTING FROM FAILURE OF THE TEMPORARY EARTH SUPPORT STRUCTURE TO ADEQUATELY SUPPORT THE TURNPIKE SUBBASE MATERIAL. SETTLEMENT WILL BE DETERMINED FROM THE PRE- AND POST-CONSTRUCTION SURVEY ELEVATIONS. ANY REPAIRS REQUIRED WILL BE COMPLETED TO THE SATISFACTION OF THE AUTHORITY AT NO ADDITIONAL COST TO THE AUTHORITY. SURVEY IS INCIDENTAL TO THE RELATED CONTRACT ITEMS.
5. LIMITS OF TEMPORARY EARTH SUPPORT SYSTEM SHOWN ARE APPROXIMATE AND SUBJECT TO CONTRACTOR MEANS AND METHODS.

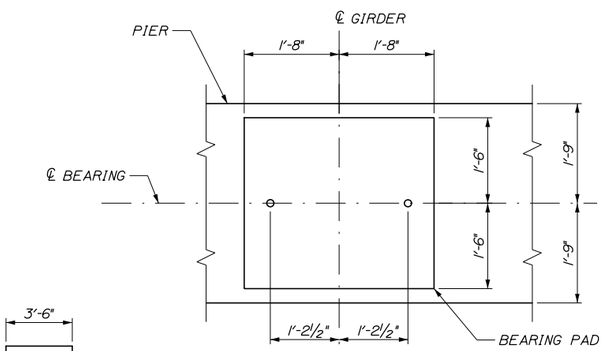

BEARING PEDESTAL LAYOUT
3/4" = 1'-0"

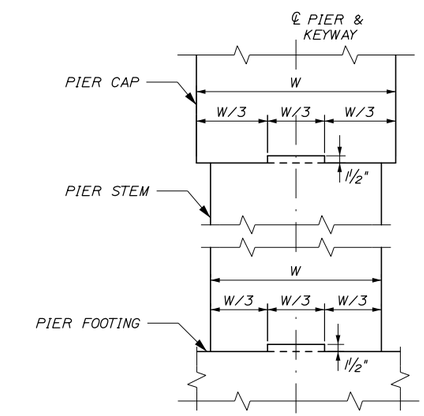

KEYWAY DETAIL
3/4" = 1'-0"

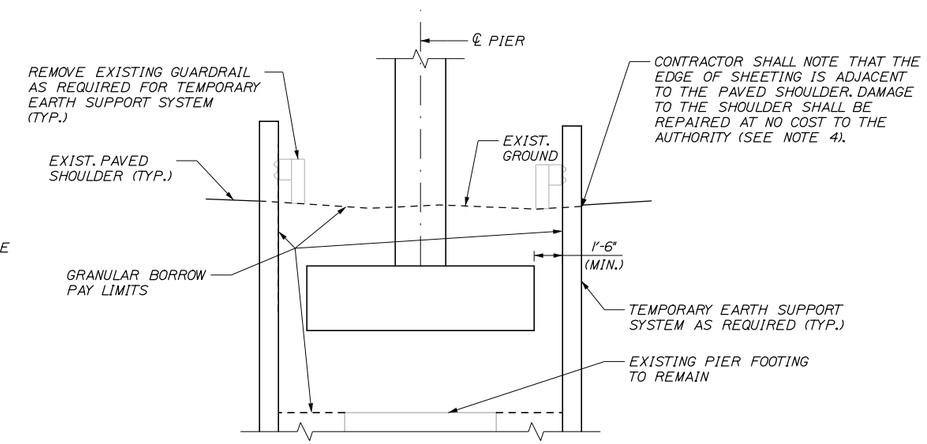

TEMPORARY EARTH SUPPORT SYSTEM DETAIL
1/4" = 1'- 0"

Date:11/10/2016

Filename: 039_Pier Plan and Elevation.dgn

Scale:

No.	Revision	By	Date

Designed by:

HNTB

CONSULTANT PROJECT MANAGER: Dale A. Mitchell, P.E.

	By	Date		By	Date
Designed	JKB	11/16	Checked	JRN	11/16
Drawn	PEB	11/16	In Charge of	RAL	11/16

HNTB CORPORATION
340 County Road, Suite 6-C
Westbrook, ME 04092
TEL (207) 774-5155
FAX (207) 228-0909

MAINE TURNPIKE

THE GOLD STAR MEMORIAL HIGHWAY

MTA PROJECT MANAGER: Ralph C. Norwood IV, P.E., P.T.O.E.

BRIDGE REPLACEMENT
MAXWELL ROAD UNDERPASS

PIER PLAN AND ELEVATION

SHEET NUMBER: S-11

CONTRACT:2017.03

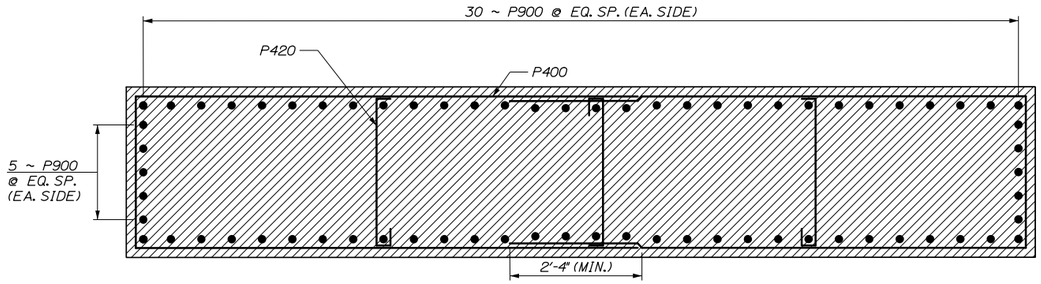

SECTION A-A
3/4" = 1'-0"

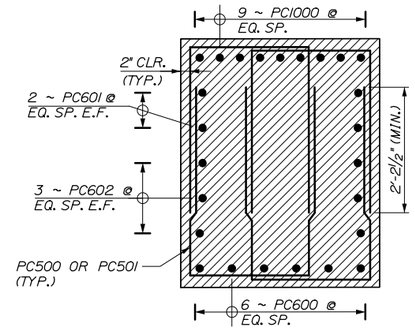

SECTION B-B
3/4" = 1'-0"

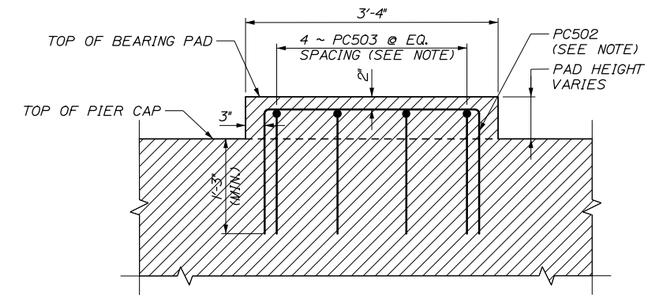

NOTE:
REINFORCING BARS SHALL BE USED ONLY WHERE CONCRETE PAD HEIGHT EXCEEDS 3".

BEARING PAD DETAIL
1" = 1'-0"

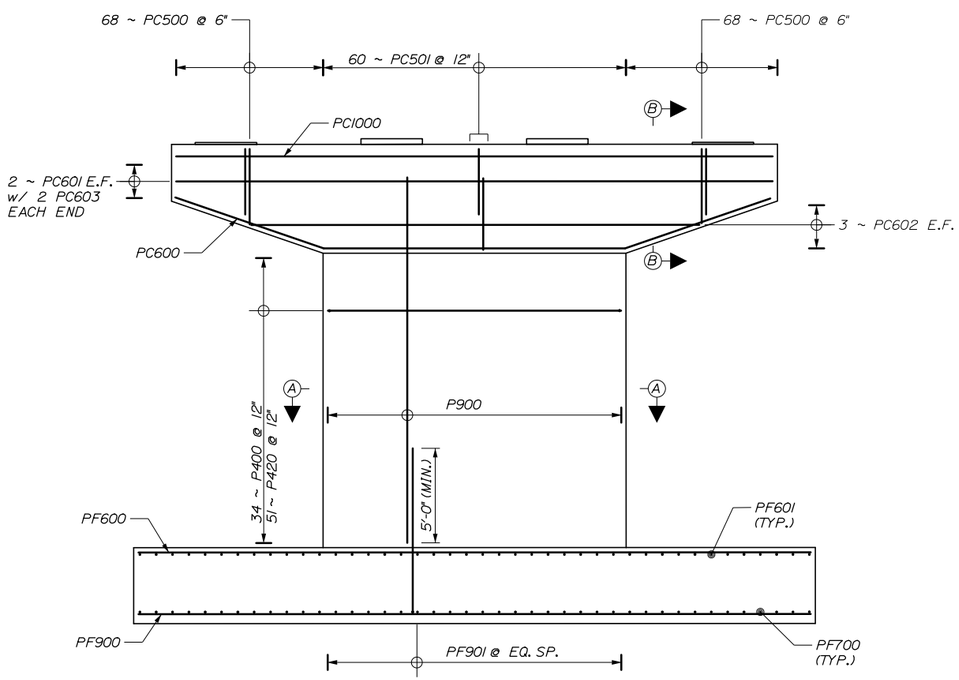

PIER REINFORCING
1/4" = 1'-0"

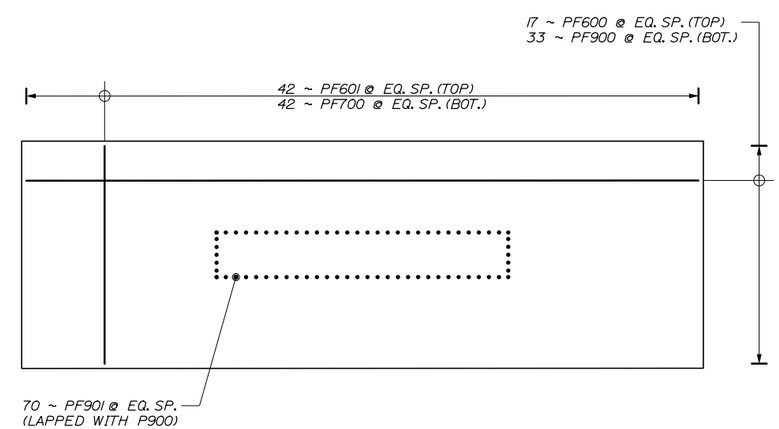

PIER FOOTING REINFORCING
1/4" = 1'-0"

Date:11/10/2016

Filename: 040_Pier Details.dgn

Scale:

No.	Revision	By	Date

Designed by:

HNTB

CONSULTANT PROJECT MANAGER: Dale A. Mitchell, P.E.

	By	Date		By	Date
Designed	JKB	11/16	Checked	JRN	11/16
Drawn	PEB	11/16	In Charge of	RAL	11/16

HNTB CORPORATION
340 County Road, Suite 6-C
Westbrook, ME 04092
TEL (207) 774-5155
FAX (207) 228-0909

MAINE TURNPIKE

THE GOLD STAR MEMORIAL HIGHWAY

MTA PROJECT MANAGER: Ralph C. Norwood IV, P.E., P.T.O.E.

BRIDGE REPLACEMENT
MAXWELL ROAD UNDERPASS

PIER DETAILS

SHEET NUMBER: S-12

CONTRACT:2017.03

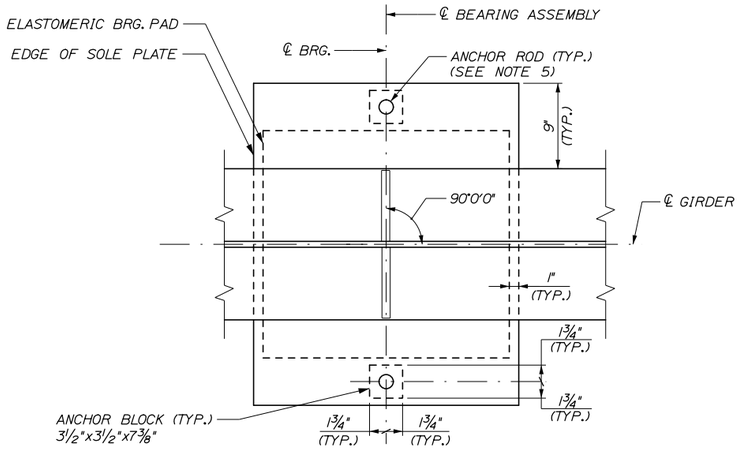

PLAN

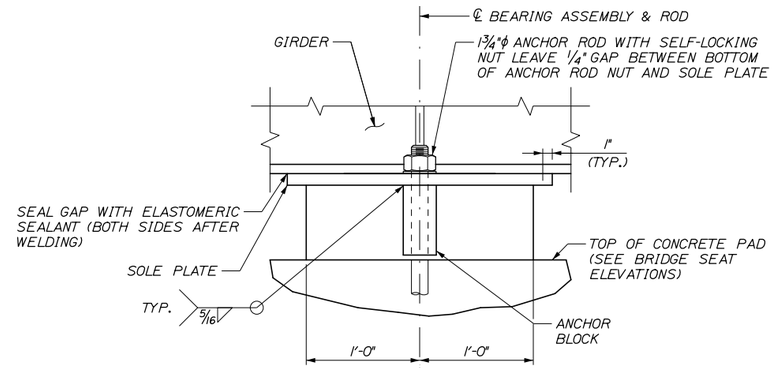

ELEVATION

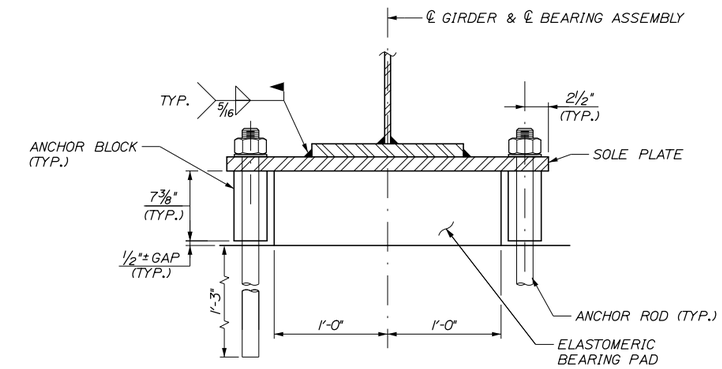

SECTION

BEARING ASSEMBLY (4 REQUIRED)

1½" = 1'-0"

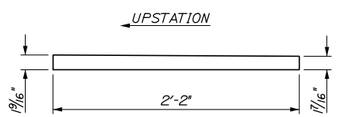

ELEVATION - SOLE PLATE

1½" = 1'-0"

BEARING DESIGN CRITERIA AT PIER	
UNFACTORED DEAD LOAD	217.2 KIPS
UNFACTORED LIVE LOAD	219.3 KIPS
MAX LONGITUDINAL DISP.	0.00 INCHES

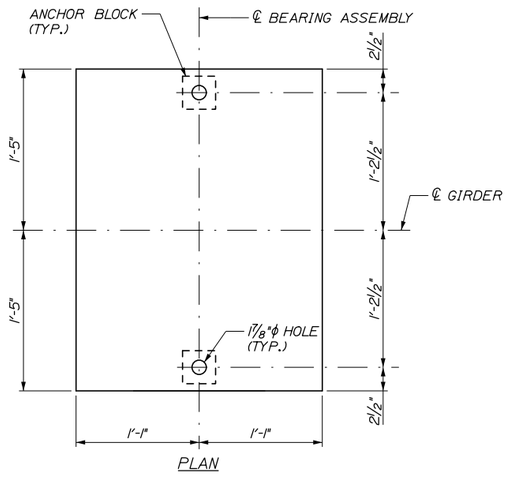

PLAN

SOLE PLATE

1½" = 1'-0"

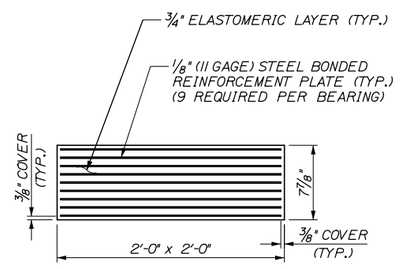

ELASTOMERIC BEARING PAD

1½" = 1'-0"

NOTES:

1. ELASTOMER SHALL BE 100% POLYCHLOROPRENE (NEOPRENE) WITH DUROMETER HARDNESS OF 50. THE SHEAR MODULUS OF THE ELASTOMER SHALL BE BETWEEN 100 AND 130 PSI.
2. SOLE PLATE, ANCHOR BLOCK, WASHER AND NUTS SHALL BE AASHTO M270 GRADE 50W AND HOT-DIP GALVANIZED IN ACCORDANCE WITH ASTM A153 AND A123 AS APPLICABLE.
3. CONTRACTOR SHALL RE-FINISH GALVANIZING, IN ACCORDANCE WITH ASTM A780, AFTER WELDING.
4. BEARING PADS WERE DESIGNED USING "METHOD A" FROM THE AASHTO LRFD SPECIFICATIONS AND SHALL BE SUBSEQUENTLY TESTED IN ACCORDANCE WITH THE SPECIFICATIONS.
5. ANCHOR RODS SHALL MEET THE REQUIREMENTS OF ASTM F1554, GRADE 55, AND SHALL BE SWEDGED OR THREADED ON THE EMBEDDED PORTION OF THE ROD.
6. ALL STEEL REINFORCING PLATES SHALL MEET THE REQUIREMENTS OF ASTM A36 UNLESS OTHERWISE NOTED AND SHALL BE DEBURRED PRIOR TO MOLDING THE BEARING.
7. VULCANIZING ELASTOMER TO STEEL PLATES SHALL BE DONE DURING THE PRIMARY MOLD PROCESS.
8. ALL BEARINGS SHALL BE MARKED PRIOR TO SHIPPING. THE MARKS SHALL INCLUDE THE BEARING LOCATION ON THE BRIDGE, AND A DIRECTION ARROW THAT POINTS UP-STATION. ALL MARKS SHALL BE PERMANENT AND SHALL BE VISIBLE AFTER THE BEARING IS INSTALLED.
9. BEARINGS SHALL BE COVERED DURING TRANSIT.
10. THE BEARINGS ARE DESIGNED SO THAT THE SUPERSTRUCTURE MAY BE ERECTED WHEN THE AMBIENT AIR TEMPERATURE IS WITHIN THE RANGE OF 35°F AND 80°F.
11. ALL PRECAUTIONS NECESSARY SHALL BE TAKEN TO PROTECT BEARING COMPONENTS FROM FIELD WELD FLASH AND SPATTER. WELDING PROCEDURES SHALL BE ESTABLISHED BY THE CONTRACTOR TO RESTRICT THE MAXIMUM TEMPERATURE OF STEEL ADJACENT TO THE ELASTOMER TO 200°F THROUGH USE OF TEMPERATURE INDICATING CRAYONS OR OTHER SUITABLE MEANS.
12. UPSET THE THREADS ON THE ANCHOR RODS AFTER ASSEMBLY.
13. SOLE PLATES SHALL MEET THE REQUIREMENTS OF ASTM A709, GRADE 50 OR 50W.
14. ANCHOR ROD EMBEDMENT SHALL BE MEASURED FROM TOP OF PIER CAP, NOT INCLUDING DEPTH OF PEDESTAL.

Date:11/10/2016

Filename: 041_Bearing Details.dgn

Scale:

No.	Revision	By	Date

Designed by:

HNTB

CONSULTANT PROJECT MANAGER: Dale A. Mitchell, P.E.

	By	Date		By	Date
Designed	JKB	11/16	Checked	JRN	11/16
Drawn	PEB	11/16	In Charge of	RAL	11/16

HNTB CORPORATION
340 County Road, Suite 6-C
Westbrook, ME 04092
TEL (207) 774-5155
FAX (207) 228-0909

MAINE TURNPIKE

THE GOLD STAR MEMORIAL HIGHWAY

MTA PROJECT MANAGER: Ralph C. Norwood IV, P.E., P.T.O.E.

BRIDGE REPLACEMENT
MAXWELL ROAD UNDERPASS

BEARING DETAILS

SHEET NUMBER: S-13

CONTRACT:2017.03

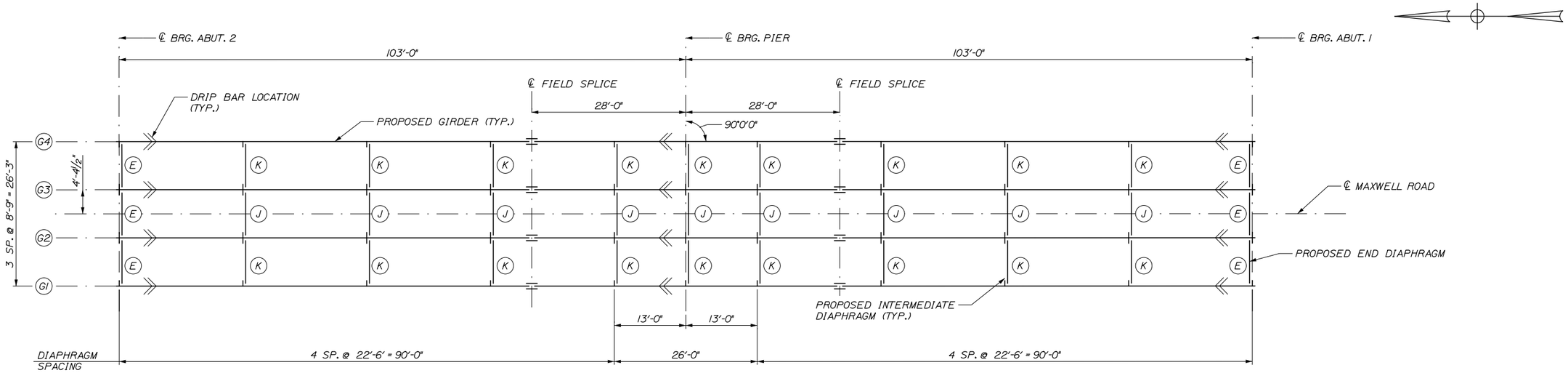

FRAMING PLAN

1" = 10'-0"

STRUCTURAL STEEL NOTES:

1. CAMBER ORDINATES AS SHOWN ARE COMPUTED TO COMPENSATE FOR ALL DEAD LOAD DEFLECTIONS AND FOR THE CURVATURE OF THE FINISHED GRADE PROFILE.
2. NO TRANSVERSE BUTT-WELD SPLICES WILL BE ALLOWED IN THE FLANGE PLATES OR WEB PLATES WITHIN 10 FT OR 10% OF THE SPAN LENGTH (WHICHEVER IS GREATER) FROM THE POINTS OF MAXIMUM NEGATIVE MOMENT OR MAXIMUM POSITIVE MOMENT. BUTT-WELD SPLICES IN FLANGES SHALL BE NOT LESS THAN 3 FEET FROM TRANSVERSE BUTT-WELDS IN THE WEB PLATES AND NO TRANSVERSE WEB OR FLANGE WELDS SHALL BE LOCATED WITHIN 3 FEET OF OTHER TRANSVERSE WELDS (E.G. CONNECTION PLATES TO WEB WELDS) ON EITHER FLANGE OR WEB.
3. SECTIONS OF FLANGE PLATES OR WEB PLATES BETWEEN TRANSVERSE SHOP SPLICES OR BETWEEN A TRANSVERSE SHOP SPLICE AND A FIELD SPLICE SHALL BE NOT LESS THAN 20 FEET IN LENGTH UNLESS OTHERWISE SHOWN ON THE PLANS.
4. BEARING STIFFENERS SHALL BE PLUMB AFTER ERECTION AND DEAD LOADING OF THE STRUCTURE.
5. ALL BOLTS SHALL BE 7/8" HIGH STRENGTH BOLTS. HOLES SHALL BE 15/16" UNLESS OTHERWISE NOTED. BOLTS SHALL BE INSTALLED WITH HEADS DOWN AT ALL BOTTOM FLANGE CONNECTIONS AND HEADS UP AT ALL TOP FLANGE CONNECTIONS.
6. DIAPHRAGM CONNECTION PLATES MAY BE EITHER PLUMB OR NORMAL TO THE TOP FLANGE.
7. BUTT WELDS AT WEB SPLICES AND FLANGE SPLICES SHALL BE GROUND FLUSH IN LONGITUDINAL DIRECTION OF GIRDER.
8. SHEAR STUDS SHALL EXTEND A MINIMUM OF 2" INTO THE SLAB. SEE "SHEAR CONNECTOR DETAIL" ON SHEET S-15.
9. USE A SINGLE ROW OF SHEAR STUDS ON SPLICE PLATES TO AVOID INTERFERENCE WITH SPLICE BOLTS.
10. CONNECTION PLATES SHALL BE FULL WEB DEPTH AND WELDED TO THE WEB AND FLANGES ON BOTH SIDES OF THE PLATES. WELDS SHALL TERMINATE 1/2" ± 1/8" FROM THE ENDS OF THE PLATES.
11. PRIOR TO ERECTION OF STRUCTURAL STEEL THE CONTRACTOR SHALL SUBMIT A DETAILED ERECTION PLAN FOR APPROVAL.
12. BEARING STIFFENERS SHALL BE MILL-TO-BEAR ON THE BOTTOM FLANGE AND TIGHT FIT TO THE TOP FLANGE. BEARING STIFFENERS USED AS CONNECTION PLATES SHALL BE DETAILED AS CONNECTION PLATES. BEARING STIFFENERS USED ON BOLSTERS SHALL BE MILL-TO-BEAR ON THE TOP AND BOTTOM FLANGE.
13. FOR DETAILS OF DIAPHRAGMS TYPES E, J & K, SEE MAINEDOT STANDARD DETAILS, PAGES 504(02), 504(04) AND 504(07).
14. ALL FAYING SURFACES, WITH THE EXCEPTION OF FIELD SPLICES, SHALL BE PAINTED OR SEALED IN ACCORDANCE WITH FHWA TECHNICAL ADVISORY T5140.22, SECTION 4.c.2.c. TO PREVENT THE FORMATION OF PACK RUST.
15. ALL PORTIONS OF THE STRUCTURAL STEEL THAT WILL REMAIN UNPAINTED SHALL BE BLAST-CLEANED TO SSPC SP-6/NACE NO. 3 AFTER FABRICATION AND PRIOR TO DELIVERY IN ORDER TO PRESENT A UNIFORM APPEARANCE FREE OF DIRT, OIL, OR OTHER FOREIGN MATERIALS.
16. CHANGES IN FIELD SPLICE FILLER PLATE THICKNESS TO COMPENSATE FOR FABRICATION TOLERANCES SHALL BE APPROVED BY THE ENGINEER.
17. AT THE CONTRACTORS OPTION, ONE FIELD SPLICE MAY BE REMOVED. LOCATION OF FLANGE TRANSITION WILL NOT CHANGE. LOCATION OF WEB SPLICE WILL BE OFFSET A MINIMUM OF 3 FEET. PRIOR TO ERECTION OF THE STRUCTURAL STEEL, THE CONTRACTOR SHALL WRAP THE ABUTMENTS AND PIER WITH POLYETHYLENE SHEETING. THE POLYETHYLENE SHEETING SHALL REMAIN IN PLACE AND KEPT FREE FROM ANY TEARS OR SEPARATIONS UNTIL THE DECK SLAB HAS BEEN PLACED. AFTER REMOVING THE POLYETHYLENE SHEETING, THE CONTRACTOR SHALL THOROUGHLY CLEAN THE ABUTMENTS AND PIER OF ALL STAINS BY A METHOD APPROVED BE THE ENGINEER. PAYMENT WILL BE CONSIDERED INCIDENTAL TO THE RELATED CONTRACT ITEMS.

Date:11/10/2016

Filename: 042_Framing Plan.dgn

Scale:

No.	Revision	By	Date

Designed by:

HNTB

CONSULTANT PROJECT MANAGER: Dale A. Mitchell, P.E.

	By	Date		By	Date
Designed	JKB	11/16	Checked	JRN	11/16
Drawn	PEB	11/16	In Charge of	RAL	11/16

HNTB CORPORATION
340 County Road, Suite 6-C
Westbrook, ME 04092
TEL (207) 774-5155
FAX (207) 228-0909

MAINE TURNPIKE

THE GOLD STAR MEMORIAL HIGHWAY

MTA PROJECT MANAGER: Ralph C. Norwood IV, P.E., P.T.O.E.

BRIDGE REPLACEMENT
MAXWELL ROAD UNDERPASS

FRAMING PLAN

SHEET NUMBER: S-14

CONTRACT:2017.03

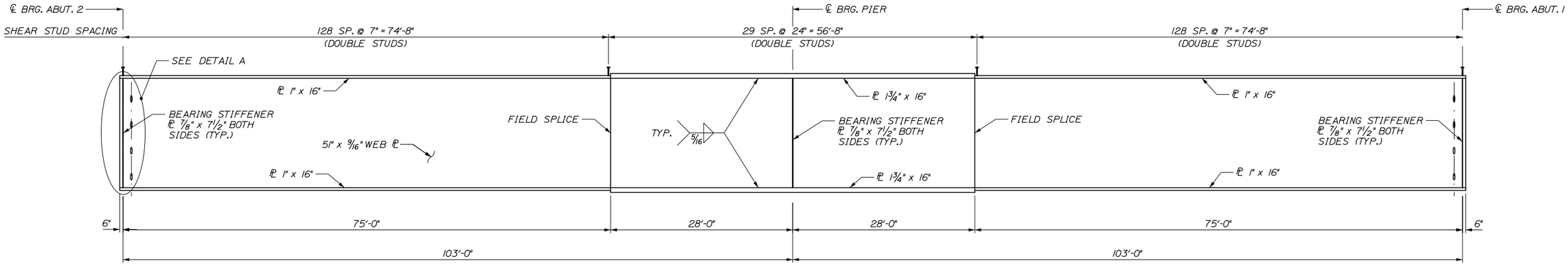

GIRDER ELEVATION

572 STUDS PER BEAM

N.T.S.

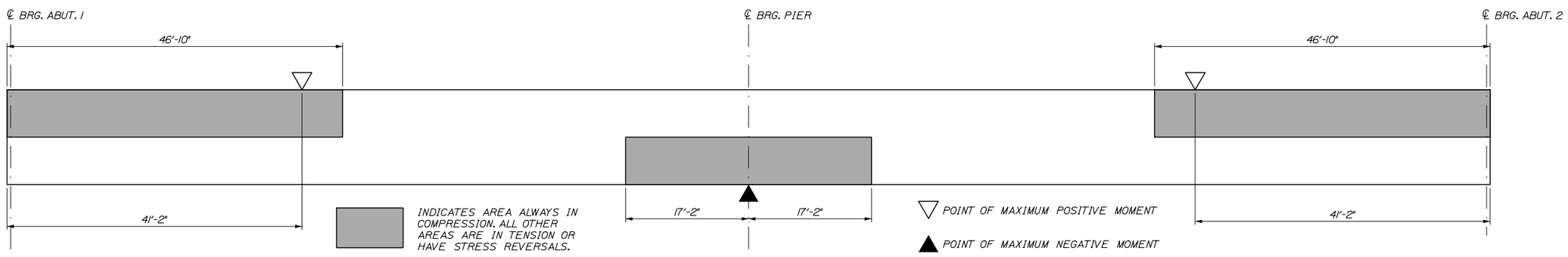

GIRDER STRESS DIAGRAM

N.T.S.

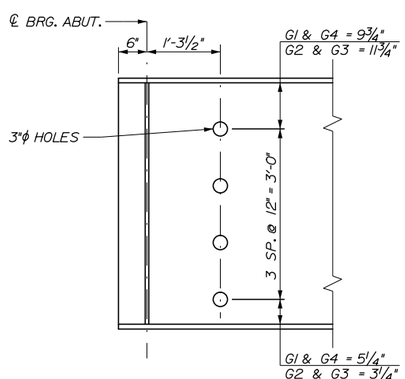

DETAIL A

3/4" = 1'-0"

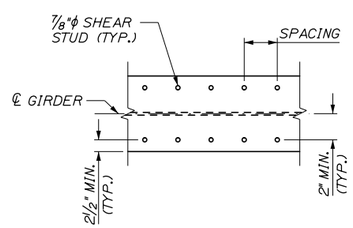

SHEAR STUD PLAN

(2 STUDS PER ROW)

3/4" = 1'-0"

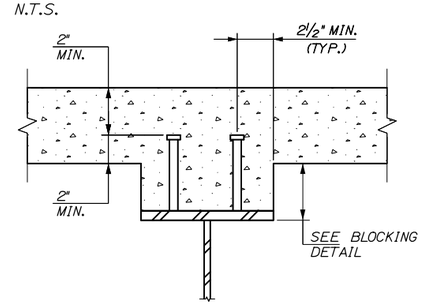

SHEAR CONNECTOR DETAIL

SHOWN WITHOUT PRECAST DECK PANELS.
SEE DETAIL IF DECK PANELS ARE USED

N.T.S.

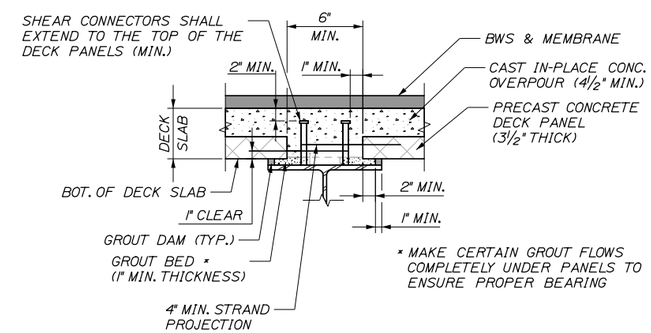

PRECAST PANEL HAUNCH DETAIL

(USE OF PRECAST PANELS IS OPTIONAL)

1" = 1'- 0"

Scale:

No.	Revision	By	Date

Designed by:

HNTB

CONSULTANT PROJECT MANAGER: Dale A. Mitchell, P.E.

	By	Date		By	Date
Designed	JKB	11/16	Checked	JRN	11/16
Drawn	PEB	11/16	In Charge of	RAL	11/16

HNTB CORPORATION
340 County Road, Suite 6-C
Westbrook, ME 04092
TEL (207) 774-5155
FAX (207) 228-0909

MAINE TURNPIKE

THE GOLD STAR MEMORIAL HIGHWAY

MTA PROJECT MANAGER: Ralph C. Norwood IV, P.E., P.T.O.E.

BRIDGE REPLACEMENT
MAXWELL ROAD UNDERPASS

STRUCTURAL STEEL DETAILS I

SHEET NUMBER: S-15

CONTRACT:2017.03

Date:11/10/2016
Filename: 043_Structural Steel Details 1.dgn

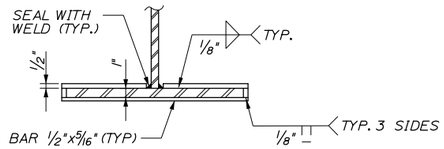

SECTION A-A
NOT TO SCALE

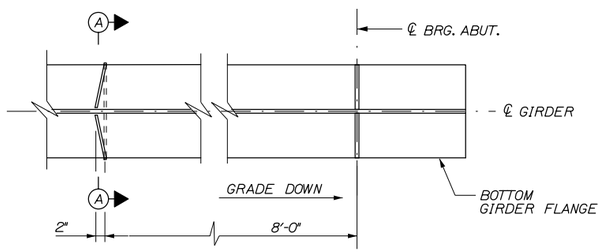

FLANGE DRIP BAR DETAIL
(ABUTMENT LOCATION SHOWN, PIER LOCATION SIMILAR)
NOT TO SCALE

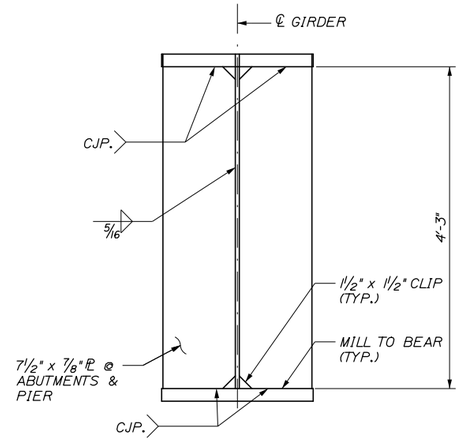

BEARING STIFFENER DETAIL
1" = 1'-0"

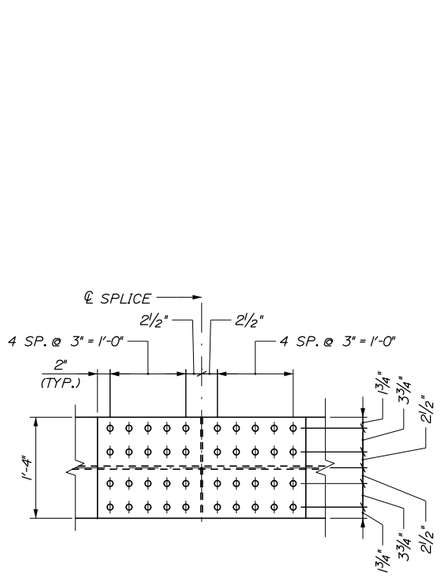

PLAN - TOP FLANGE

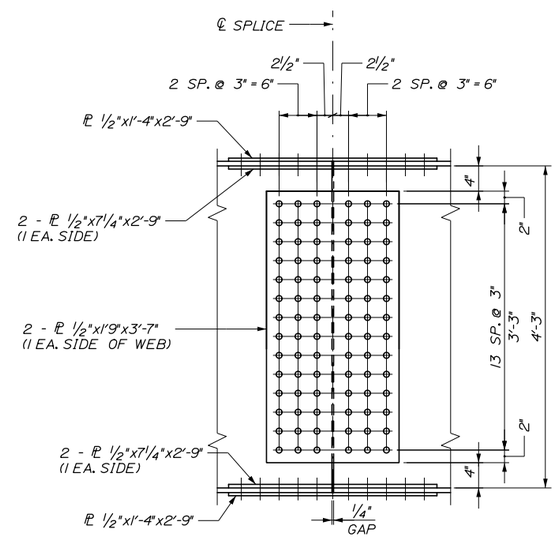

ELEVATION

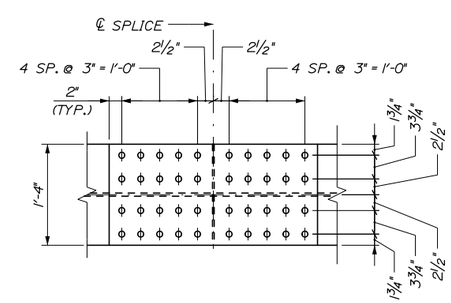

PLAN - BOTTOM FLANGE

BOLTED FIELD SPLICE
1" = 1'-0"

Date:11/10/2016

Filename: 044_Structural Steel Details 2.dgn

Scale:

No.	Revision	By	Date

Designed by:

HNTB

CONSULTANT PROJECT MANAGER: Dale A. Mitchell, P.E.

	By	Date		By	Date
Designed	JKB	11/16	Checked	JRN	11/16
Drawn	PEB	11/16	In Charge of	RAL	11/16

HNTB CORPORATION
340 County Road, Suite 6-C
Westbrook, ME 04092
TEL (207) 774-5155
FAX (207) 228-0909

MAINE TURNPIKE

THE GOLD STAR MEMORIAL HIGHWAY

MTA PROJECT MANAGER: Ralph C. Norwood IV, P.E., P.T.O.E.

BRIDGE REPLACEMENT
MAXWELL ROAD UNDERPASS

STRUCTURAL STEEL DETAILS II

SHEET NUMBER: S-16

CONTRACT:2017.03

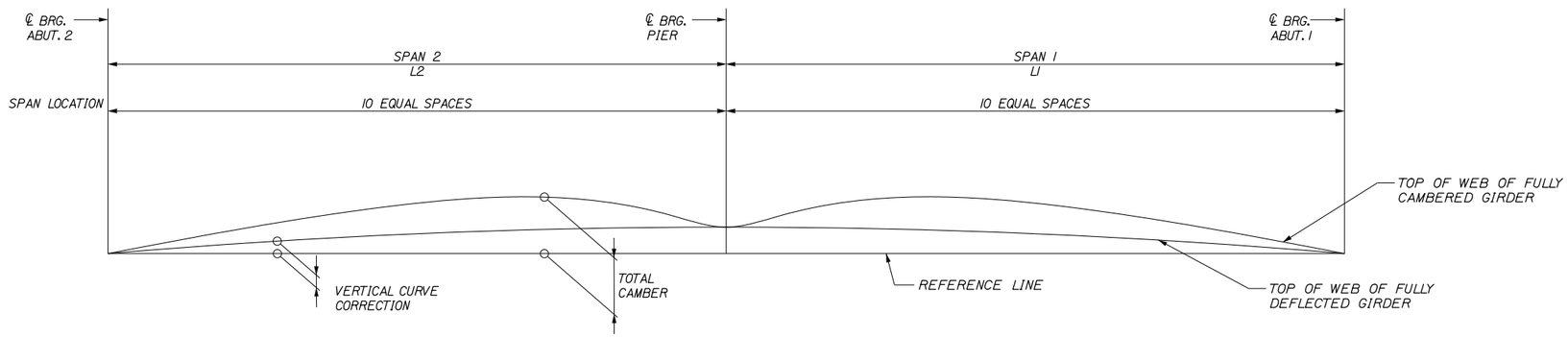

CAMBER DIAGRAM
NOT TO SCALE

CAMBER ORDINATES (FEET)

DESIGNATION	CL BRG. ABUT. 1	SPAN 1									CL BRG. PIER 1	Span 2									CL BRG. Abut. 2
		0.1	0.2	0.3	0.4	0.5	0.6	0.7	0.8	0.9		0.1	0.2	0.3	0.4	0.5	0.6	0.7	0.8	0.9	
STEEL D.L.	0.000	0.009	0.016	0.022	0.023	0.022	0.018	0.013	0.008	0.002	0.000	0.002	0.008	0.013	0.018	0.022	0.023	0.022	0.016	0.009	0.000
CONCRETE D.L.	0.000	0.034	0.062	0.082	0.089	0.084	0.069	0.049	0.027	0.008	0.000	0.008	0.027	0.049	0.069	0.084	0.089	0.082	0.062	0.034	0.000
SUPERIMPOSED D.L.	0.000	0.009	0.017	0.022	0.024	0.022	0.019	0.013	0.007	0.002	0.000	0.002	0.007	0.013	0.019	0.022	0.024	0.022	0.017	0.009	0.000
VERTICAL CURVE	0.000	0.304	0.576	0.816	1.024	1.200	1.344	1.456	1.536	1.583	1.599	1.584	1.536	1.456	1.344	1.199	1.023	0.816	0.576	0.304	0.000
TOTAL	0.000	0.356	0.671	0.942	1.160	1.328	1.450	1.531	1.578	1.595	1.599	1.596	1.578	1.531	1.450	1.327	1.159	0.942	0.671	0.356	0.000

BOTTOM OF SLAB ELEVATIONS

GIRDER NO.	CL BRG. ABUT. 1	Span 1									CL BRG. PIER 1	Span 2									CL BRG. ABUT. 2
		0.1	0.2	0.3	0.4	0.5	0.6	0.7	0.8	0.9		0.1	0.2	0.3	0.4	0.5	0.6	0.7	0.8	0.9	
GIRDER 1	366.84	367.22	367.56	367.87	368.12	368.33	368.49	368.62	368.71	368.77	368.82	368.85	368.86	368.84	368.80	368.71	368.57	368.39	368.17	367.90	367.60
GIRDER 2	367.01	367.40	367.75	368.05	368.31	368.51	368.68	368.80	368.89	368.95	368.99	369.02	369.04	369.03	368.98	368.89	368.76	368.58	368.35	368.08	367.77
GIRDER 3	367.01	367.40	367.75	368.05	368.31	368.51	368.68	368.80	368.89	368.95	368.99	369.02	369.04	369.03	368.98	368.89	368.76	368.58	368.35	368.08	367.77
GIRDER 4	366.84	367.22	367.56	367.87	368.12	368.33	368.49	368.62	368.71	368.77	368.82	368.85	368.86	368.84	368.80	368.71	368.57	368.39	368.17	367.90	367.60

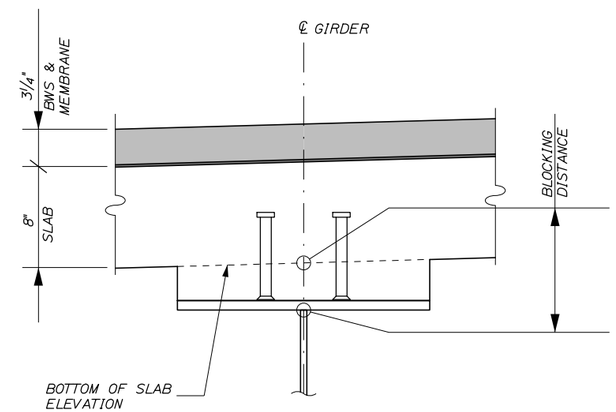

BLOCKING DETAIL
NOT TO SCALE

BLOCKING NOTES:

1. PRIOR TO PROFILING THE GIRDERS, THE CONTRACTOR SHALL HAVE LOWERED THE GIRDERS TO THEIR FINAL ELEVATION AND INSTALLED ALL NECESSARY DIAPHRAGMS AND/OR TEMPORARY BRACES NECESSARY TO HOLD THE GIRDERS IN THEIR FINAL PLUMB POSITION.
2. THE CONTRACTOR SHALL INSTALL THE PROTECTIVE SHIELDING AND ACCEPTABLE SAFETY LINES OR SHIELDING PRIOR TO PROFILING THE GIRDERS.

Date:11/10/2016

Filename: 045_StructuralSteelDetails 3.dgn

Scale:

No.	Revision	By	Date

Designed by:

HNTB

CONSULTANT PROJECT MANAGER: Dale A. Mitchell, P.E.

	By	Date		By	Date
Designed	JKB	11/16	Checked	JRN	11/16
Drawn	PEB	11/16	In Charge of	RAL	11/16

HNTB CORPORATION
340 County Road, Suite 6-C
Westbrook, ME 04092
TEL (207) 774-5155
FAX (207) 228-0909

MAINE TURNPIKE

THE GOLD STAR MEMORIAL HIGHWAY

MTA PROJECT MANAGER: Ralph C. Norwood IV, P.E., P.T.O.E.

BRIDGE REPLACEMENT
MAXWELL ROAD UNDERPASS

STRUCTURAL STEEL DETAILS III

SHEET NUMBER: S-17

CONTRACT:2017.03

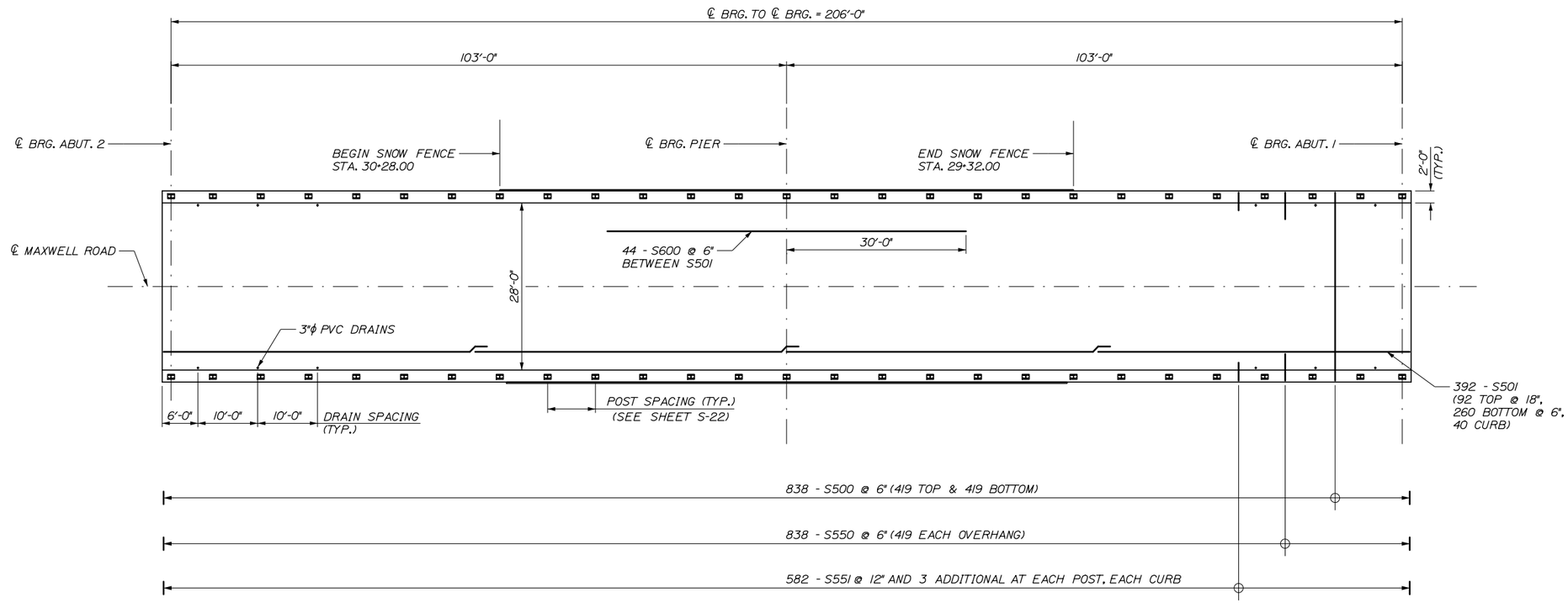

PLAN

3/32" = 1'-0"

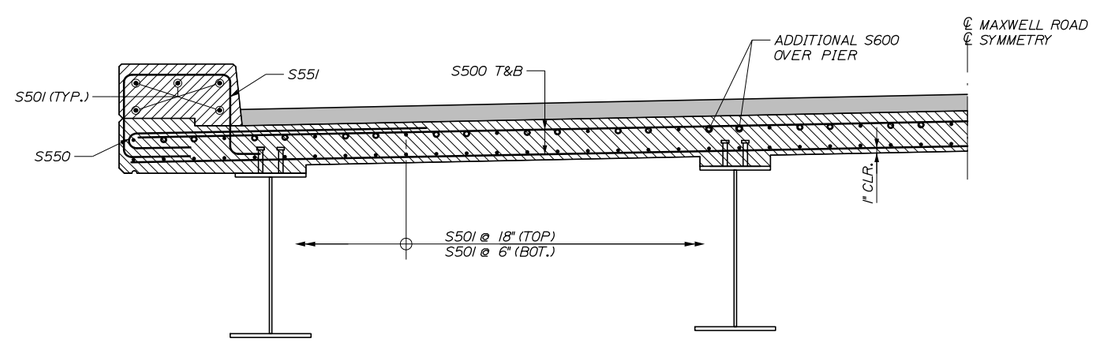

HALF REINFORCING SECTION

1" = 1'-0"

DECK PLAN NOTES:

1. LAP LENGTH SHALL BE:
   2'- 4" MIN. FOR #5 BARS
2. THE THEORETICAL BLOCKING USED FOR DESIGN OF THE STRUCTURE IS 2½ INCHES AT THE CENTERLINE OF BEARING AT THE ABUTMENTS AND PIERS AS SHOWN ON SHEET S-17.
3. THREE ADDITIONAL S551 BARS SHALL BE PLACED AT EACH RAILING POST LOCATION. SEE SHEET S-20 FOR DETAIL.

Date:11/10/2016

Filename: 046_Superstructure Plan.dgn

Scale:			
No.	Revision	By	Date

Designed by:

HNTB

CONSULTANT PROJECT MANAGER: Dale A. Mitchell, P.E.

	By	Date		By	Date
Designed	JKB	11/16	Checked	JRN	11/16
Drawn	PEB	11/16	In Charge of	RAL	11/16

HNTB CORPORATION
340 County Road, Suite 6-C
Westbrook, ME 04092
TEL (207) 774-5155
FAX (207) 228-0909

MAINE TURNPIKE

THE GOLD STAR MEMORIAL HIGHWAY

MTA PROJECT MANAGER: Ralph C. Norwood IV, P.E., P.T.O.E.

BRIDGE REPLACEMENT
MAXWELL ROAD UNDERPASS

SUPERSTRUCTURE PLAN

SHEET NUMBER: S-18

CONTRACT:2017.03

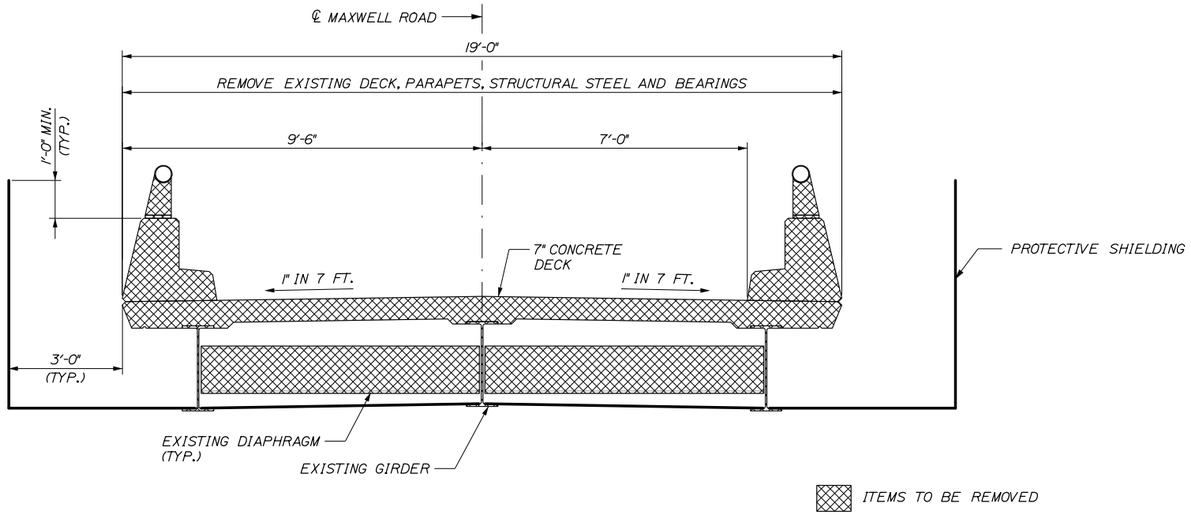

EXISTING TYPICAL SECTION

1/2" = 1'-0"

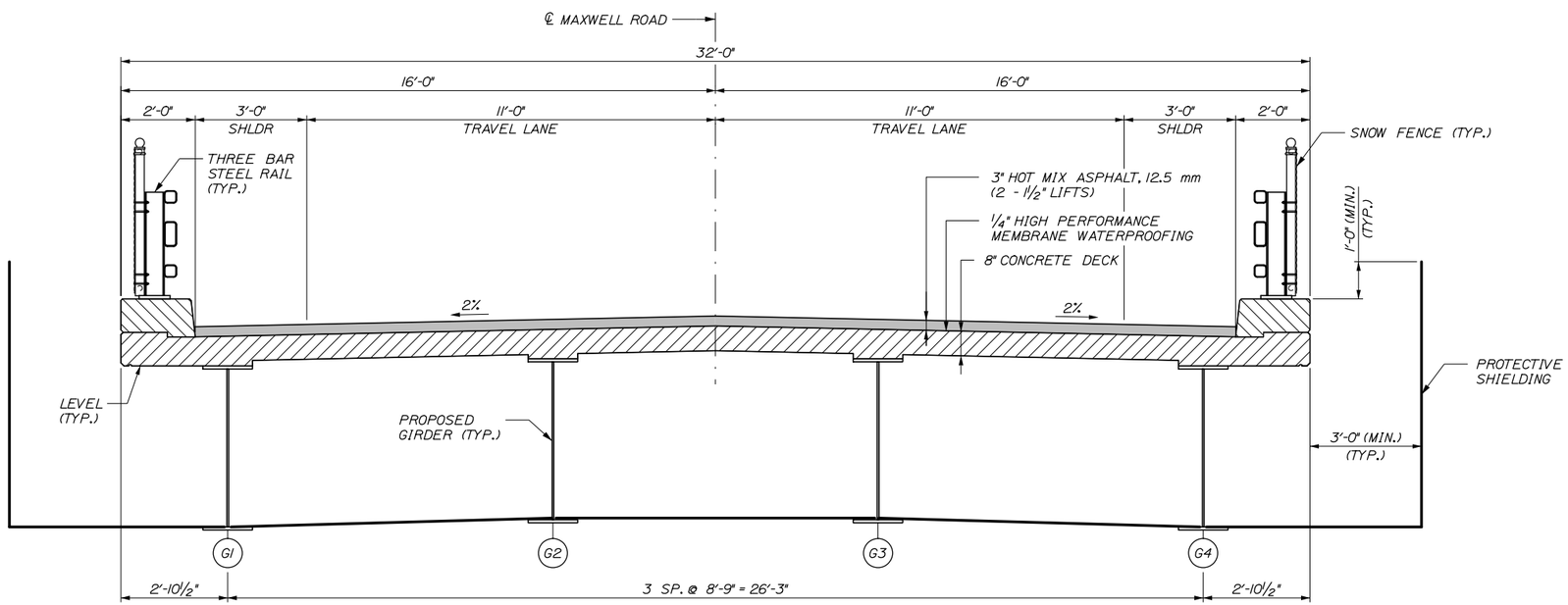

PROPOSED TYPICAL SECTION

1/2" = 1'-0"

SUPERSTRUCTURE NOTES:

1. CLEAR PROTECTIVE COATING FOR CONCRETE SURFACES SHALL BE APPLIED TO THE FOLLOWING AREAS: CURB SURFACES AND FASCIA OVERHANG TO DRIP NOTCH.
2. ALL BRIDGE CURB CONCRETE, INCLUDING INSIDE FACES, TOP AND OUTSIDE FACES AND DECK FASCIA SHALL HAVE A RUBBED FINISH PRIOR TO THE APPLICATION OF THE CLEAR PROTECTIVE COATING FOR CONCRETE SURFACE.
3. THE CONCRETE DECK SHALL BE GIVEN A SMOOTH BULL FLOAT OR WOOD FLOAT FINISH.
4. SHOP DRAWINGS FOR BAR CHAIRS USED WITH REINFORCING STEEL IN SLAB CONSTRUCTION, SHALL BE SUBMITTED WITH REQUIRED SPACING TO THE RESIDENT FOR APPROVAL. BAR CHAIRS SHALL BE EPOXY-COATED OR PLASTIC PROTECTED.
5. PROTECTIVE SHIELDING SHALL EXTEND LONGITUDINALLY FROM ROADSIDE PIER 1 TO ROADSIDE PIER 3 ON THE EXISTING STRUCTURE AND 10 FEET BEYOND THE EDGE OF PAVEMENT BELOW FOR THE PROPOSED STRUCTURE. THE WIDTH OF THIS SHIELDING SHALL BE EQUAL TO THE TOTAL WIDTH OF THE NEW STRUCTURE PLUS THREE FEET BEYOND THE FASCIA LINES ON EACH SIDE OF THE STRUCTURE.
6. CONTRACTOR SHALL HAVE THE OPTION OF USING PRECAST, PRESTRESSED CONCRETE DECK PANELS AS AN ALTERNATIVE TO THE CONCRETE SLAB DETAILS SHOWN ON THE CONTRACT PLANS. THE REQUIREMENT SHOWN ON PAGES 502(07) - 502(12) OF THE MAINE DOT STANDARD DETAILS SHALL APPLY. ALL MILD REINFORCING WITHIN THE PRECAST PANELS SHALL BE EPOXY COATED.
7. THE SUPERSTRUCTURE SLAB CONCRETE SHALL BE PLACED IN ONE CONTINUOUS OPERATION AND THE CONCRETE SLAB SHALL BE KEPT PLASTIC ONE COMPLETE SPAN BEHIND THE SPAN BEING PLACED.
8. FORM V-GROOVE ON THE FASCIA AT THE HORIZONTAL JOINT BETWEEN THE CURB AND SLAB.
9. THE APPROXIMATE SHIELDING QUANTITIES REPRESENT THE TOTAL QUANTITY OF SHIELDING REQUIRED TO COMPLETE THE WORK, INCLUDING INITIAL INSTALLATION, REMOVAL, AND RESETTING OF SHIELDING.
10. DO NOT COVER DECK DRAINS WITH WATERPROOFING MEMBRANES. DEPRESS DRAINS 1/2" BELOW TOP OF SLAB. PROVIDE 23 GAUGE GALVANIZED SCREENS (1/4" MESH) OVER DRAINS.

APPROXIMATE SHIELDING QUANTITIES*

	DEMOLITION	CONSTRUCTION	TOTAL
APPROX. WIDTH OF NEW SHIELDING INSTALLED (FT)	25 FT	38 FT	63 FT
APPROX. AREA OF SHIELDING INSTALLED (SY)	300 SY	465 SY	765 SY

* SEE NOTES 5 AND 9

Date: 11/10/2016

Filename: 047_TypicalSection.dgn

Scale:

No.	Revision	By	Date

Designed by:

HNTB

CONSULTANT PROJECT MANAGER: Dale A. Mitchell, P.E.

	By	Date		By	Date
Designed	JKB	11/16	Checked	JRN	11/16
Drawn	PEB	11/16	In Charge of	RAL	11/16

HNTB CORPORATION
340 County Road, Suite 6-C
Westbrook, ME 04092
TEL (207) 774-5155
FAX (207) 228-0909

MAINE TURNPIKE

THE GOLD STAR MEMORIAL HIGHWAY

MTA PROJECT MANAGER: Ralph C. Norwood IV, P.E., P.T.O.E.

BRIDGE REPLACEMENT
MAXWELL ROAD UNDERPASS

TYPICAL SECTION

SHEET NUMBER: S-19

CONTRACT: 2017.03

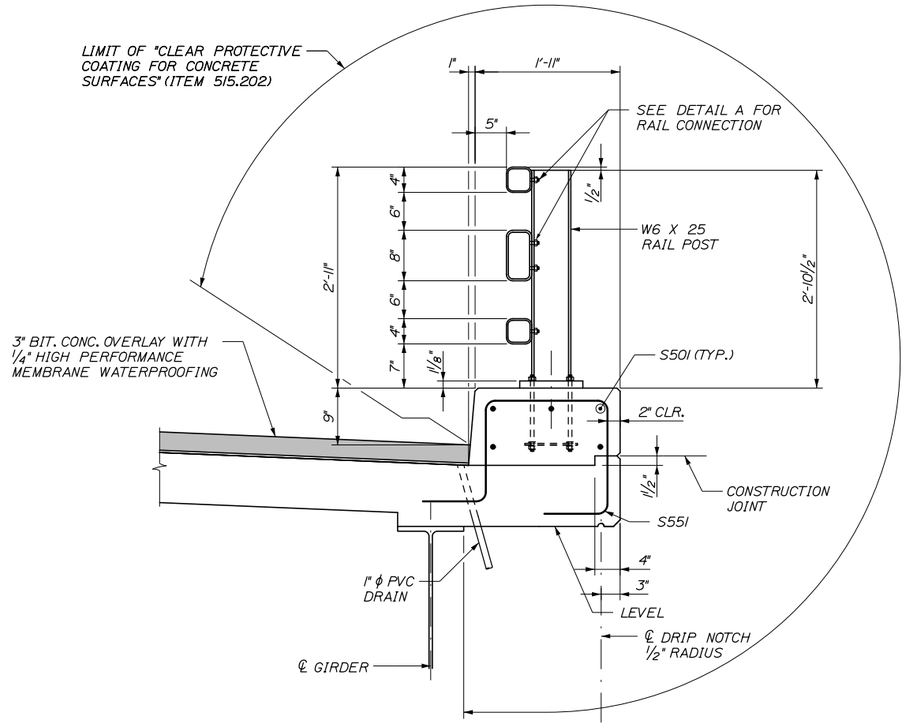

BARRIER DETAIL
1" = 1'-0"

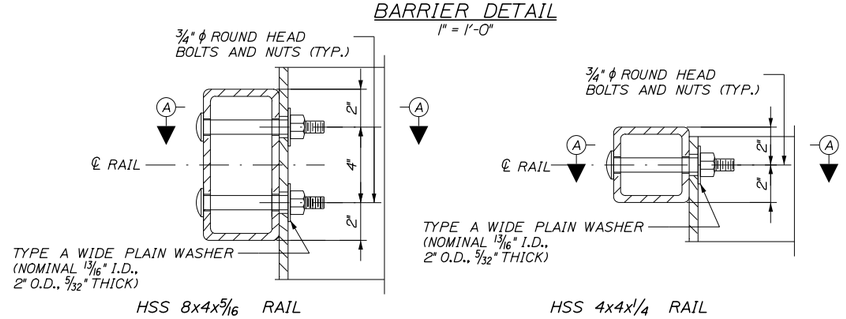

DETAIL A RAIL CONNECTION
3" = 1' -0"

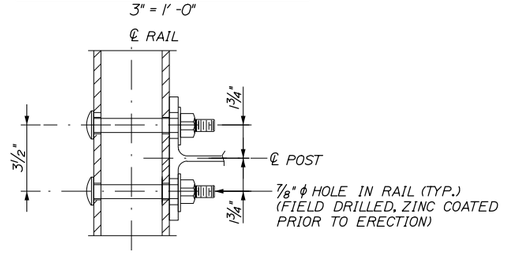

SECTION A-A
3" = 1' -0"

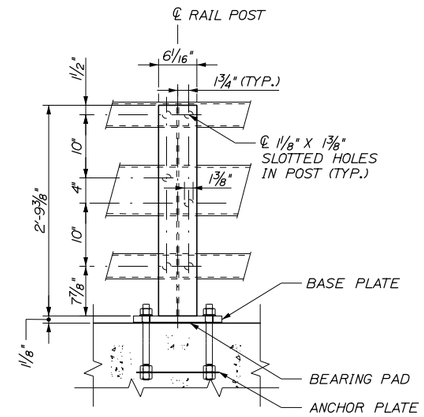

BACK ELEVATION VIEW
1" = 1'-0"

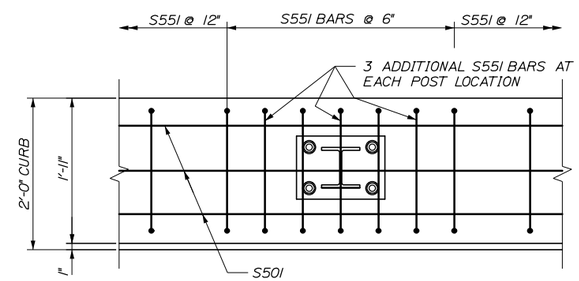

CURB REINFORCING PLAN
1" = 1'-0"

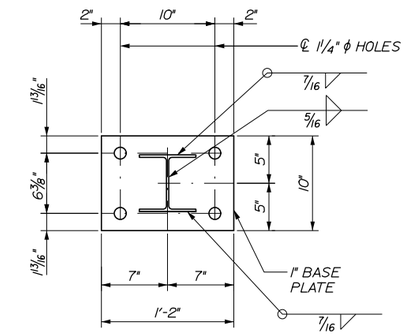

POST & BASE PLATE PLAN
1 1/2" = 1'-0"

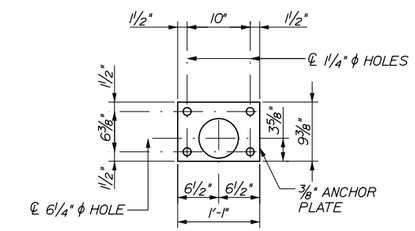

ANCHOR PLATE PLAN
1" = 1'-0"

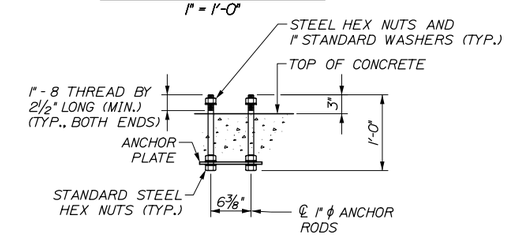

RAIL POST ANCHORAGE
1" = 1'-0"

BRIDGE RAIL MATERIAL NOTES:

1. STRUCTURAL TUBING SHALL CONFORM TO THE REQUIREMENTS OF ASTM A500, GRADE B, STRUCTURAL TUBING. RAIL TUBING SHALL MEET THE LONGITUDINAL CHARPY V-NOTCH REQUIREMENTS OF 15 FT. LBS. AT 0 DEGREES F. FOR ASTM A500, GRADE B. THE TEST SAMPLES SHALL BE TAKEN AFTER FORMING THE TUBES.
2. RAIL POSTS AND BASE PLATES SHALL CONFORM TO THE REQUIREMENTS OF ASTM A572 GRADE 50, EXCEPT ANCHOR PLATES MAY BE ASTM A36.
3. BOLTS AND MATCHING NUTS FOR RAIL-TO-POST ATTACHMENT SHALL CONFORM TO ASTM A325 OR A449. ALL OTHER BOLTS AND NUTS SHALL CONFORM TO ASTM 307 AND ASTM 563 GRADE A RESPECTIVELY OR BETTER, EXCEPT ASTM A307 NUTS MAY BE USED ON THE BOTTOM OF ANCHOR ASSEMBLY. WASHERS SHALL BE HARDENED STEEL COMMERCIAL TYPE A PLAIN WIDE WASHERS AND SHALL MEET DIMENSIONAL REQUIREMENTS OF A.N.S.I. B18.22. ANCHOR RODS SHALL CONFORM TO ASTM F1554, Gr. 105.
4. ALL STEEL COMPONENTS (EXCEPT STAINLESS) SHALL BE GALVANIZED AFTER FABRICATION IN CONFORMANCE TO AASHTO M232 (ASTM A153) AND AASHTO M111 (ASTM A123). THE GALVANIZING KETTLE SHALL HAVE 0.05 TO 0.09 PERCENT NICKEL. GALVANIZING SURFACES SHALL HAVE A UNIFORM APPEARANCE AND GALVANIZING MATERIAL SHALL BE PROPERLY STORED.
5. PREFORMED BEARING PADS (1/8" THICK) SHALL CONFORM TO AASHTO M251.

Date:11/10/2016

Filename: 048_Superstructure Details.dgn

Scale:			
No.	Revision	By	Date

Designed by:

HNTB

CONSULTANT PROJECT MANAGER: Dale A. Mitchell, P.E.

	By	Date		By	Date
Designed	JKB	11/16	Checked	JRN	11/16
Drawn	PEB	11/16	In Charge of	RAL	11/16

HNTB CORPORATION
340 County Road, Suite 6-C
Westbrook, ME 04092
TEL (207) 774-5155
FAX (207) 228-0909

MAINE TURNPIKE

THE GOLD STAR MEMORIAL HIGHWAY

MTA PROJECT MANAGER: Ralph C. Norwood IV, P.E., P.T.O.E.

BRIDGE REPLACEMENT
MAXWELL ROAD UNDERPASS

SUPERSTRUCTURE DETAILS

SHEET NUMBER: S-20

CONTRACT:2017.03

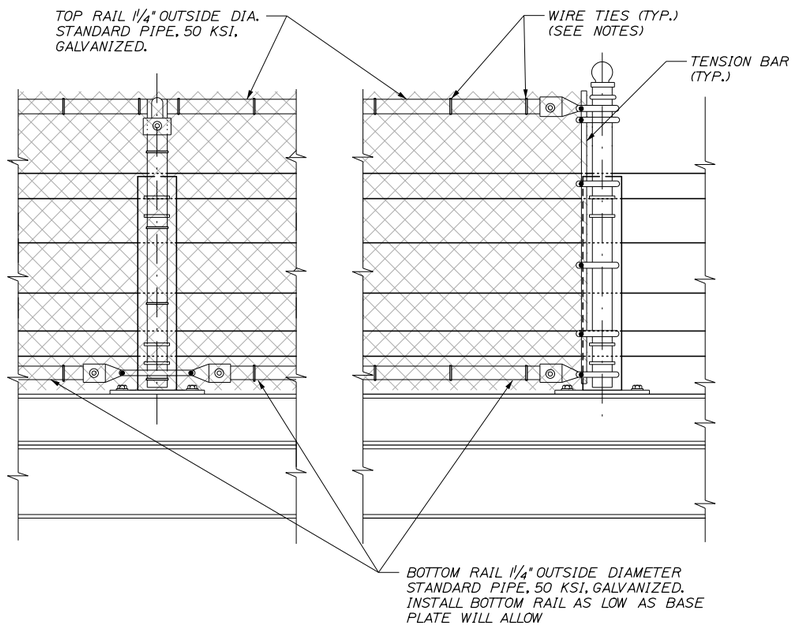

ELEVATION INTERIOR POST

ELEVATION END POST

SNOW FENCE POST ATTACHMENT TO TWO-RAIL RAILING

1" = 1'-0"

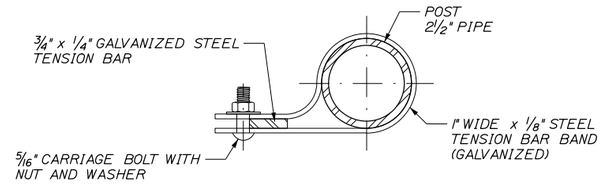

TENSION BAND DETAIL

6" = 1'-0"

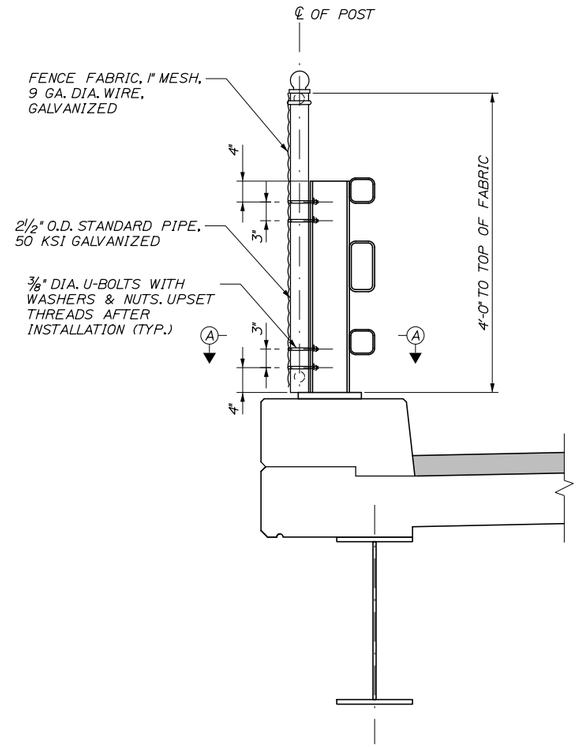

CURB DETAIL

1" = 1'-0"

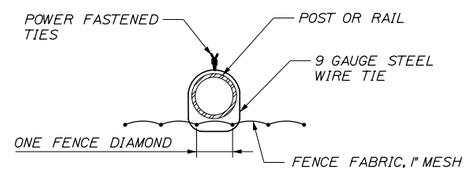

POWER FASTENED TIE

NOT TO SCALE

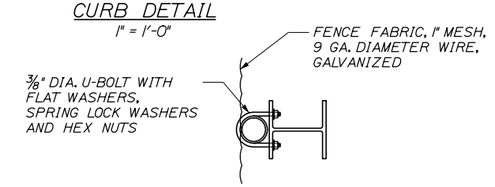

SECTION A-A

1½" = 1'-0"

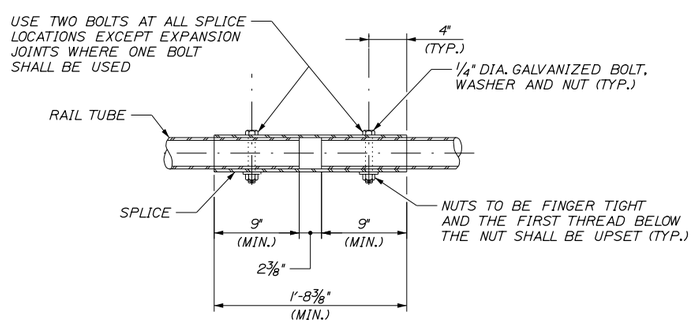

TYPICAL RAIL SPLICE DETAIL (TOP & BOTTOM RAIL)

1½" = 1'-0"

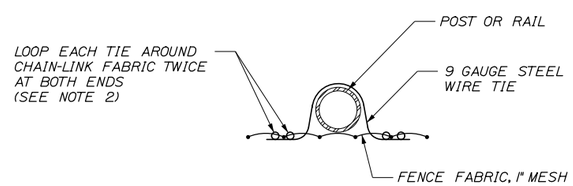

DOUBLE PIGTAILED TIE - ALTERNATE

NOT TO SCALE

NOTES:

1. ROUND WIRE TIES SHALL BE 9 GAUGE ZINC-COATED STEEL PREFORMED TO THE RADIUS OF THE POST AND POWER-FASTENED TO WRAP 360 DEGREES AROUND THE POST AND ONE COMPLETE DIAMOND OF THE CHAIN-LINK FENCE. THE TWO ENDS SHALL BE TWISTED TOGETHER IN A CLOSE HELIX OF 1½ MACHINE TURNS (3 FULL TWISTS) TIGHTLY AROUND THE POST AND CHAIN-LINK FABRIC. SPACE TIES @ 6" O.C. TO BOTTOM RAIL AND @ 12" O.C. TO ALL POSTS AND OTHER RAILS. TWISTED ENDS SHALL BE BENT DOWN UPON COMPLETION.
2. ALTERNATIVELY, WIRE TIES MAY BE STANDARD ROUND 9 GAUGE ZINC-COATED STEEL. ALL TIES SHALL BE WRAPPED AROUND CHAIN-LINK FABRIC TWICE (DOUBLE PIGTAILED) AT BOTH ENDS. SPACE TIES @ 6" O.C. TO BOTTOM RAIL AND @ 12" O.C. TO ALL POSTS AND OTHER RAILS.
3. ALL BOLTS AND NUTS SHALL BE STEEL CONFORMING TO ASTM A 307 AND ASTM A 563 GRADE A RESPECTIVELY. WASHERS SHALL BE HARDENED STEEL COMMERCIAL TYPE A PLAIN AND SHALL MEET THE DIMENSIONAL REQUIREMENTS OF ANSI B18.22. ALL BOLTS, NUTS AND WASHERS SHALL BE HOT-DIP GALVANIZED IN ACCORDANCE WITH AASHTO M 111 (ASTM A 123) OR AASHTO M 232 (ASTM A 153) AS APPLICABLE.
4. SEE SHEET S-18 FOR SNOW FENCE LIMITS.
5. POST CAPS SHALL BE SECURELY ATTACHED TO POSTS.

Date:11/10/2016

Filename: 049_Snow Fence Details.dgn

Scale:

No.	Revision	By	Date

Designed by:

HNTB

CONSULTANT PROJECT MANAGER: Dale A. Mitchell, P.E.

	By	Date		By	Date
Designed	JKB	11/16	Checked	JRN	11/16
Drawn	PEB	11/16	In Charge of	RAL	11/16

HNTB CORPORATION
340 County Road, Suite 6-C
Westbrook, ME 04092
TEL (207) 774-5155
FAX (207) 228-0909

MAINE TURNPIKE

THE GOLD STAR MEMORIAL HIGHWAY

MTA PROJECT MANAGER: Ralph C. Norwood IV, P.E., P.T.O.E.

BRIDGE REPLACEMENT
MAXWELL ROAD UNDERPASS

SNOW FENCE DETAILS

SHEET NUMBER: S-21

CONTRACT:2017.03

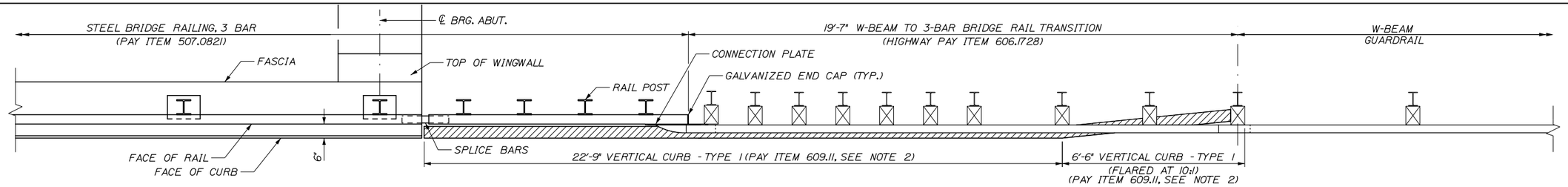

PLAN - W-BEAM TO 3-BAR BRIDGE RAIL TRANSITION
1/2" = 1'-0"

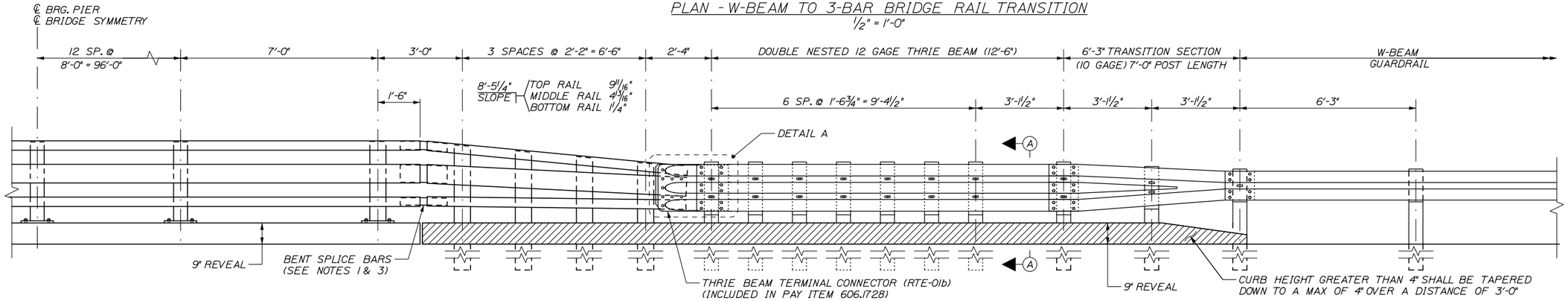

ELEVATION - W-BEAM TO 3-BAR BRIDGE RAIL TRANSITION
1/2" = 1'-0"

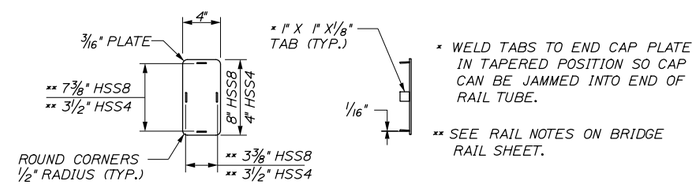

* WELD TABS TO END CAP PLATE IN TAPERED POSITION SO CAP CAN BE JAMMED INTO END OF RAIL TUBE.

** SEE RAIL NOTES ON BRIDGE RAIL SHEET.

END CAP DETAILS

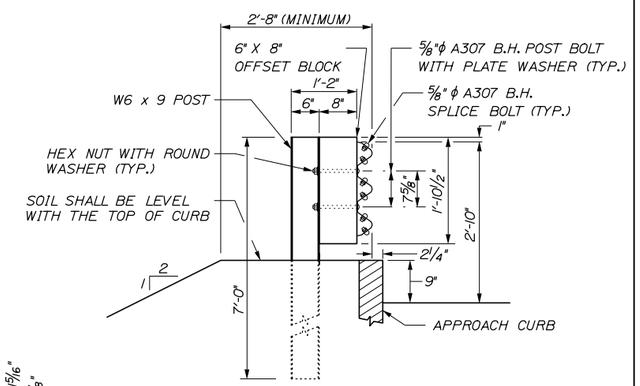

SECTION A-A (POST RAIL ASSEMBLY)
TYPICAL AT 7'-0" DRIVEN POST LOCATIONS
3/4" = 1'-0"

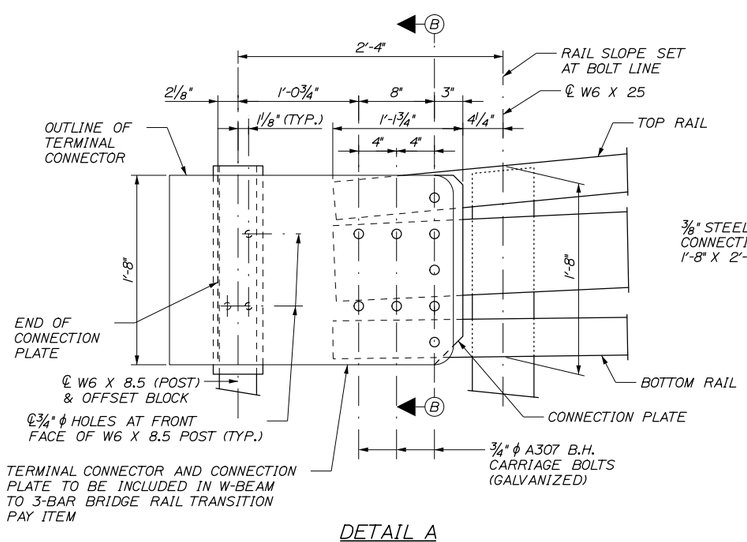

DETAIL A
(OVERLAPPING OF DOUBLE NESTED THRIE-BEAM NOT SHOWN FOR CLARITY)
1 1/2" = 1'-0"

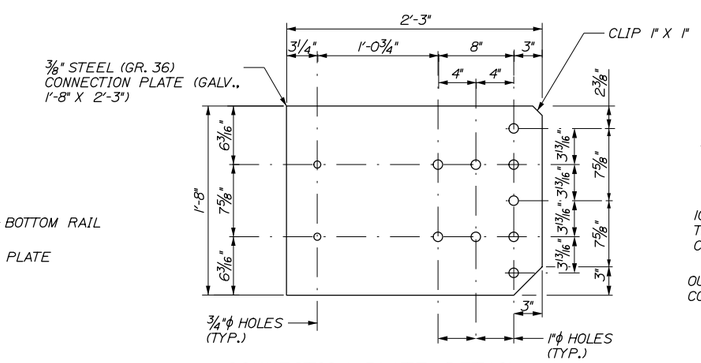

CONNECTION PLATE DETAIL
1 1/2" = 1'-0"

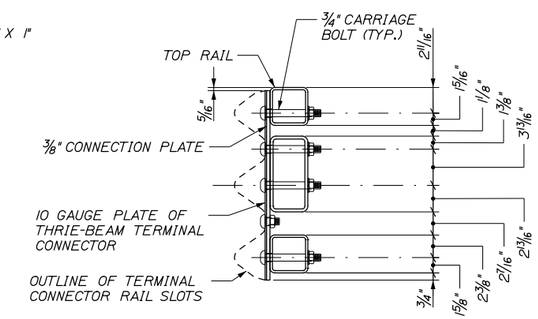

SECTION B-B (THROUGH CONNECTION PLATE)
1 1/2" = 1'-0"

NOTES:

1. SEE MAINEDOT STANDARD DETAIL 507(10) FOR RAIL BAR EXPANSION JOINT DETAIL.
2. CURBING SHALL BE EITHER PRECAST CONCRETE, CAST-IN-PLACE CONCRETE OR GRANITE TO MEET DIMENSIONS SHOWN ON THE PLANS. CURBING SHALL BE PAID UNDER ITEM 609.11 VERTICAL CURB-TYPE 1.
3. RAIL SPLICES CONNECTING RAIL TRANSITION SHAL BE INCIDENTAL TO THE RESPECTIVE BRIDGE RAIL ITEMS.

Date:11/10/2016

Filename: 050_BridgeRailTrans.dgn

Scale:			
No.	Revision	By	Date

Designed by:

HNTB

CONSULTANT PROJECT MANAGER: Dale A. Mitchell, P.E.

	By	Date		By	Date
Designed	JKB	11/16	Checked	JRN	11/16
Drawn	PEB	11/16	In Charge of	RAL	11/16

HNTB CORPORATION
340 County Road, Suite 6-C
Westbrook, ME 04092
TEL (207) 774-5155
FAX (207) 228-0909

MAINE TURNPIKE

THE GOLD STAR MEMORIAL HIGHWAY

MTA PROJECT MANAGER: Ralph C. Norwood IV, P.E., P.T.O.E.

BRIDGE REPLACEMENT
MAXWELL ROAD UNDERPASS

BRIDGE RAIL TRANSITION DETAILS

SHEET NUMBER: S-22

CONTRACT:2017.03

MAXWELL ROAD BRIDGE

	MARK	SIZE	NO.	LENGTH	TYPE	A	B	C	D	E	F	G	INCR.	REMARKS
	ABUTMENTS													
*	A600	6	9	48' - 8"	Str.									Bottom Horizontal
*	A601	6	10	26' - 1"	Str.									Wingwall Horiz. (Tapered portion)
*	A602	6	50	18' - 0"	129	2' - 6"	7' - 9"							Wingwall/Abutment Stirrups
*	A603	6	18	8' - 0" to 15' - 6"	129	2' - 6"	2' - 9" to 6' - 6"						11 1/4"	Wingwall Stirrups
*	A604	6	6	8' - 11"	119	0' - 10"	8' - 1"	7' - 2 3/4"						Top of Wingwall
*	A605	6	32	13' - 6"	129	2' - 6"	5' - 6"							Abutment Stirrups
*	A606	6	33	4' - 4"	105	1' - 0"	2' - 4"	1' - 7 3/4"	1' - 0"					Abutment to Deck Connection
*	A607	6	2	26' - 8"	Str.									Corbel Horizontal
*	A608	6	28	4' - 10"	109	0' - 8"	1' - 9"	1' - 8 1/2"	2' - 5"	1' - 8 1/2"				Corbeal Stirrup
*	A609	6	28	4' - 11"	119	1' - 8"	3' - 6"	2' - 3 1/2"						Approach Slab Connection
*	A610	6	18	9' - 6"	129	2' - 6"	3' - 6"							Wingwall Ends
*	A700	7	16	48' - 8"	Str.									Wingwall/Abutment Horiz.
*	A701	7	12	26' - 5"	Str.									Wingwall/Abutment Horiz.
*	B600	6	9	48' - 8"	Str.									Bottom Horizontal
*	B601	6	10	26' - 1"	Str.									Wingwall Horiz. (Tapered portion)
*	B602	6	50	18' - 0"	129	2' - 6"	7' - 9"							Wingwall/Abutment Stirrups
*	B603	6	18	8' - 0" to 15' - 6"	129	2' - 6"	2' - 9" to 6' - 6"						11 1/4"	Wingwall Stirrups
*	B604	6	6	8' - 11"	119	0' - 10"	8' - 1"	7' - 2 3/4"						Top of Wingwall
*	B605	6	32	13' - 6"	129	2' - 6"	5' - 6"							Abutment Stirrups
*	B606	6	33	4' - 4"	105	1' - 0"	2' - 4"	1' - 7 3/4"	1' - 0"					Abutment to Deck Connection
*	B607	6	2	26' - 8"	Str.									Corbel Horizontal
*	B608	6	28	4' - 10"	109	0' - 8"	1' - 9"	1' - 8 1/2"	2' - 5"	1' - 8 1/2"				Corbeal Stirrup
*	B609	6	28	4' - 11"	119	1' - 8"	3' - 6"	2' - 3 1/2"						Approach Slab Connection
*	B610	6	18	9' - 6"	129	2' - 6"	3' - 6"							Wingwall Ends
*	B700	7	16	48' - 8"	Str.									Wingwall/Abutment Horiz.
*	B701	7	12	26' - 5"	Str.									Wingwall/Abutment Horiz.
	PIER													
*	PF600	6	17	35' - 6"	Str.									Pier Footing (top)
*	PF601	6	42	11' - 6"	Str.									Pier Footing (top)
*	PF700	7	42	11' - 6"	Str.									Pier Footing (bot)
*	PF900	9	33	35' - 6"	Str.									Pier Footing (bot)
*	PF901	9	70	9' - 11"	118	8' - 4"	1' - 7"							Pier Footing/Column Connection
*	P400	4	34	20' - 4"	129	2' - 6"	8' - 11"							Pier Column Horizontal
*	P420	4	51	3' - 8"	126	0' - 6"	2' - 8"	0' - 6"	0' - 4"					Pier Column Horizontal Ties
*	P900	9	70	19'- 11"	Str.									Pier Column Vertical
*	PC500	5	136	6' - 10" to 9' - 6"	129	2' - 0"	2' -5" to 3' - 9"						2"	Pier Cap Ties (tapered)
*	PC501	5	60	9' - 6"	129	2' - 0"	3' - 9"							Pier Cap Ties
*	PC502	5	8	5' - 10"	129	2' - 10"	1' - 6"							Pedestal
*	PC503	5	8	5' - 6"	129	2' - 6"	1' - 6"							Pedestal
*	PC600	6	6	32' - 5"	104	16' - 0"	8' - 2 1/2"	2' - 9"	8' - 2 1/2"					Pier Cap Horizontal
*	PC601	6	4	31' - 6"	Str.									Pier Cap Horizontal
*	PC602	6	6	15' - 6" to 31' - 6"	Str.									Pier Cap Horizontal
*	PC603	6	4	10' - 0"	129	3' - 0"	3' - 6"							Pier Cap End
*	PC1000	10	9	36' - 2"	129	31' - 6"	2' - 4"							Pier Cap Horizontal
	DECK SLAB													
*	S500	5	838	31' - 8"	Str.									Deck Transverse
*	S501	5	392	53' - 11"	Str.									Deck Longitudinal
*	S550	5	838	6' - 5"	108	5' - 10"	0' - 7"	0' - 5"						Deck Overhang
*	S551	5	582	6' - 1"	101	1' - 7"	1' - 5"	0' - 10"	0' - 10"					Curb Stirrup
*	S600	6	44	60' - 0"	Str.									Neg. Reinforcing Over Pier

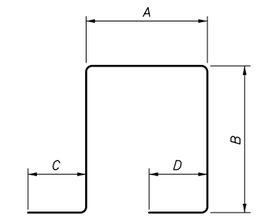

TYPE 101

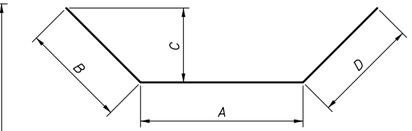

TYPE 104

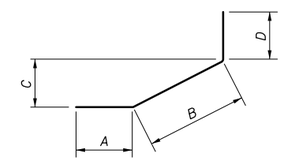

TYPE 105

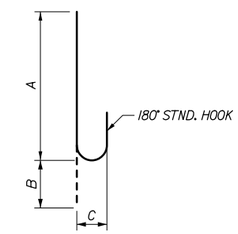

TYPE 108

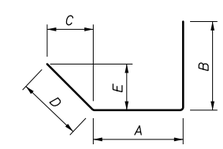

TYPE 109

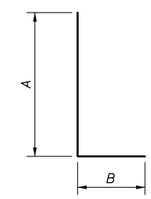

TYPE 118

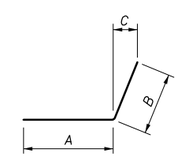

TYPE 119

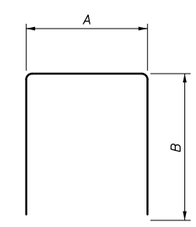

TYPE 129

Date:11/10/2016

Filename: 051_Reinforcing Schedule.dgn

Scale:

No.	Revision	By	Date

Designed by:

HNTB

CONSULTANT PROJECT MANAGER: Dale Mitchell, P.E.

	By	Date		By	Date
Designed	JKB	11/16	Checked	JRN	11/16
Drawn	PEB	11/16	In Charge of	RAL	11/16

HNTB CORPORATION
340 County Road, Suite 6-C
Westbrook, ME 04092
TEL (207) 774-5155
FAX (207) 228-0909

MAINE TURNPIKE

THE GOLD STAR MEMORIAL HIGHWAY

MTA PROJECT MANAGER: Ralph C. Norwood IV, P.E., P.T.O.E.

BRIDGE REPLACEMENT
MAXWELL ROAD UNDERPASS

REINFORCING STEEL SCHEDULE

SHEET NUMBER: S-23

CONTRACT:2017.03

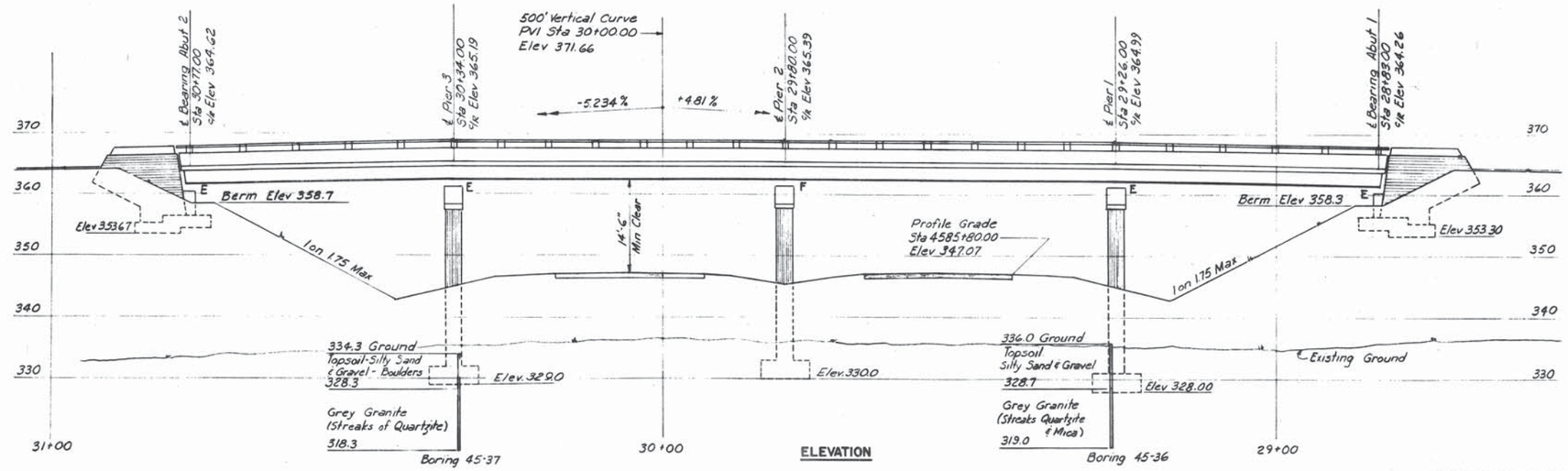

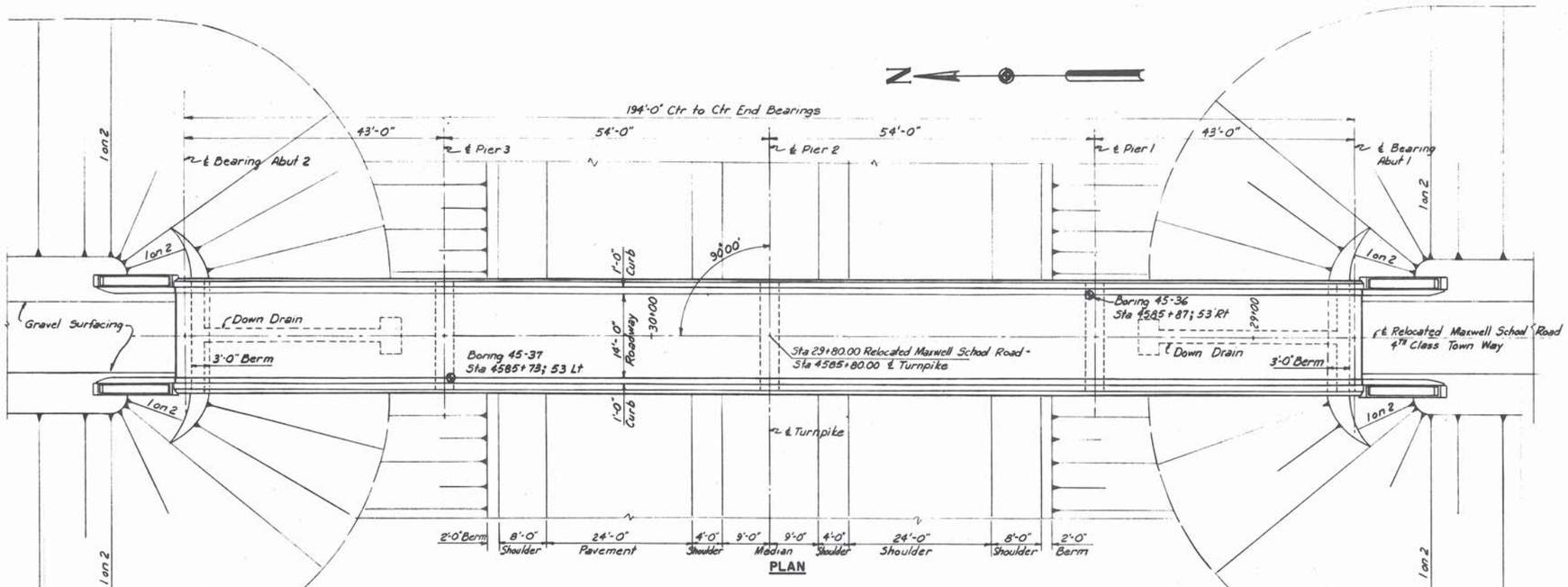

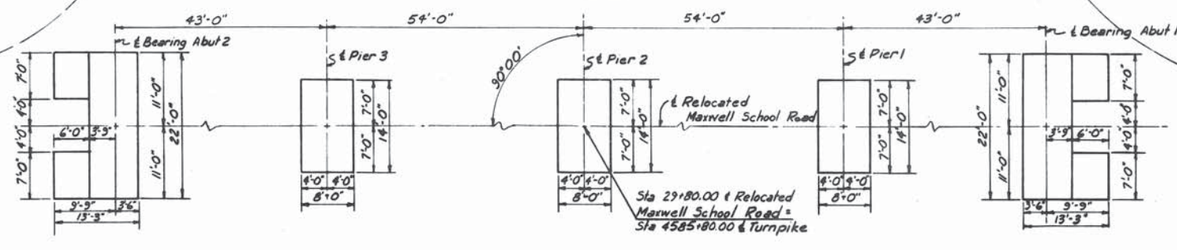

GENERAL NOTES

Design Specifications: AASHO (1953) with minor modifications
Design Loading: H15
Maximum Base Pressures:
Abutments - 1.6 tons/sq ft
Piers - 5.3 tons/sq ft

REFERENCES

Dwg No.	Title	Sub-structure Contractor	Superstructure: Steel Fabricator	Superstructure: Steel Erector	Superstructure: Floor Contractor
SD 1A	Standard Abutment Details	✓	✓	✓	✓
SD 2	Standard Pier Details	✓	✓	✓	
SD 3	Abutment Drainage Details	✓			
SD 5	Standard Handrail, Bearing Devices and Miscellaneous Details	✓	✓	✓	✓
SD 6	Standard Diaphragm Details		✓	✓	✓
SD 7	Standard Type A Splices for 27 WF Beams		✓	✓	
SD 11A	Type "Y" Expansion Joint	✓	✓	✓	✓
SD 13	Standard Bridge Cross Section 14'-0" & 30'-0" Roadway				

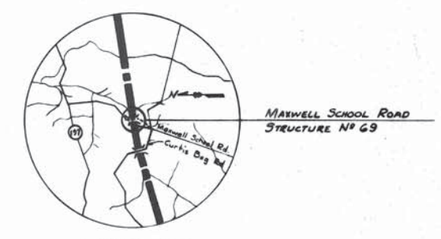

VICINITY MAP
Scale: 1" = 1 Mile

DRAWING 69.01.03

	BY	DATE	No.	REVISION	BY	DATE
MADE	WCM	7-20-64				
TRACED			2	As-Built	HBN	12356
CHECKED	DHL	7-22-54	1	Per 213 Pfg. Elev	CVA	71435
IN CHARGE OF I.D.S.						

MAINE TURNPIKE AUTHORITY
MAINE TURNPIKE
SECTION 2 — PORTLAND TO AUGUSTA

STRUCTURE NO. 69 TURNPIKE UNDER
MAXWELL SCHOOL ROAD
STA 4585+80.00
GENERAL PLAN AND ELEVATION

HOWARD, NEEDLES, TAMMEN & BERGENDOFF
CONSULTING ENGINEERS
NEW YORK KANSAS CITY

SCALE: 1/32" = 1'-0"
CONTRACT NO. _____
SHEET NO. 302 OF 382

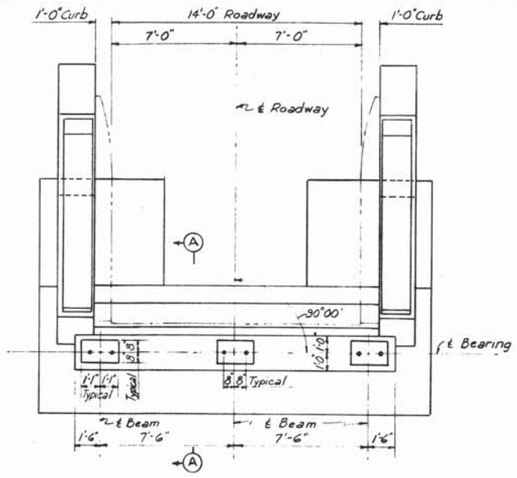

PLAN

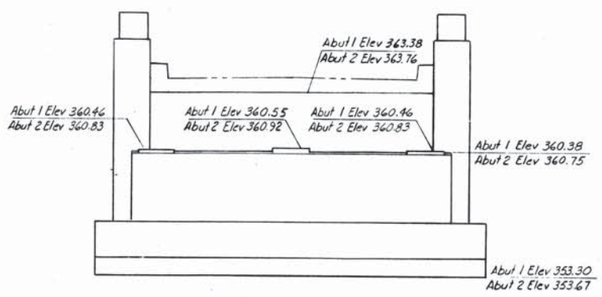

FRONT ELEVATION

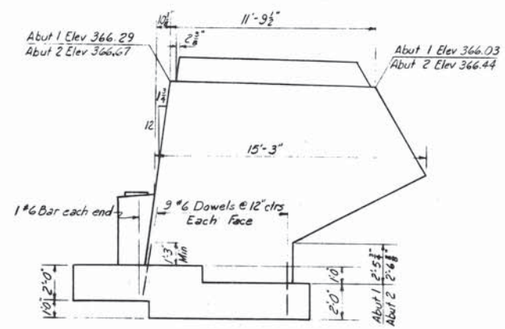

END ELEVATION

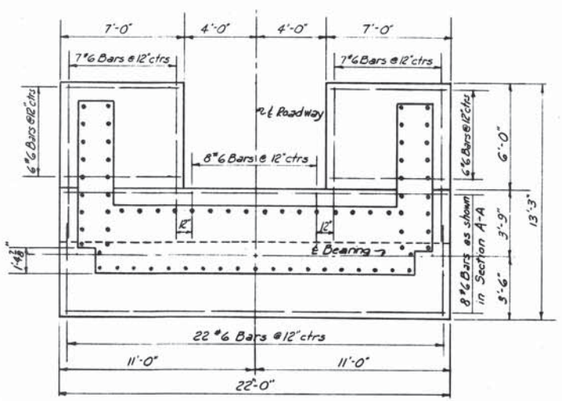

FOOTING PLAN

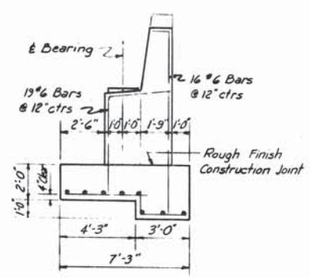

SECTION A-A

Note: Piers to be keyed into solid undisturbed rock a minimum of 6"

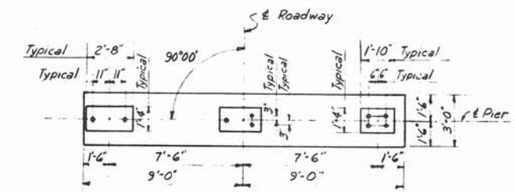

HALF CAP PLAN
PIERS 1 AND 3

HALF CAP PLAN
PIER 2

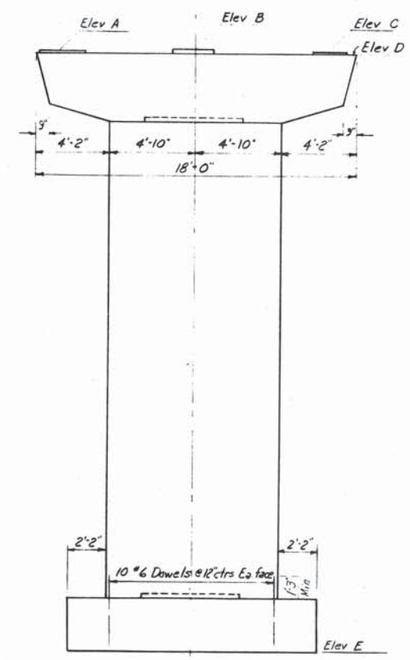

ELEVATION

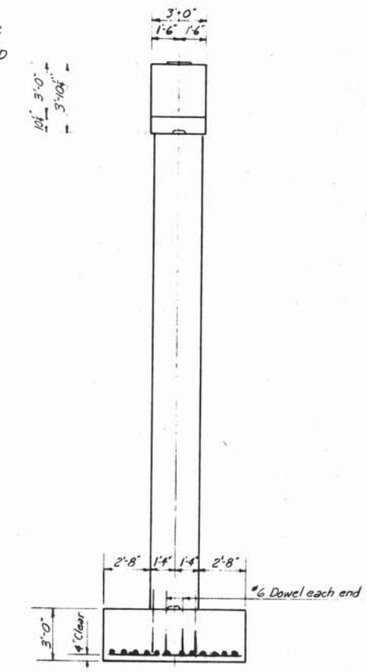

END ELEVATION

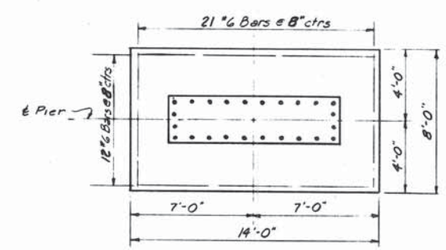

FOOTING PLAN

PIER ELEVATIONS			
Point	Pier 1	Pier 2	Pier 3
A	360.99	361.56	361.20
B	361.08	361.65	361.29
C	360.99	361.56	361.20
D	360.97	361.54	361.18
E	328.00	330.00	329.00

DRAWING 69.02.03

	BY	DATE	No.	REVISION	BY	DATE
MADE	WCM	7-21-54	3	As-Built	HBH	12-23-56
TRACED			2	Pier 2 & 3 Ftg. Elev.	CVA	7-14-55
CHECKED	DHL	7-22-54	1.	Bar Spacing, Ftg	RPC	8-12-54
IN CHARGE OF I.D.S.K.						

MAINE TURNPIKE AUTHORITY

MAINE TURNPIKE

SECTION 2 — PORTLAND TO AUGUSTA

STRUCTURE NO. 69 — TURNPIKE UNDER
MAXWELL SCHOOL ROAD
STA 4585+80.00

SUBSTRUCTURE

HOWARD, NEEDLES, TAMMEN & BERGENDOFF
CONSULTING ENGINEERS
NEW YORK — KANSAS CITY

SCALE: ¼"=1'-0"
CONTRACT NO. _____
SHEET NO. 310 OF 382

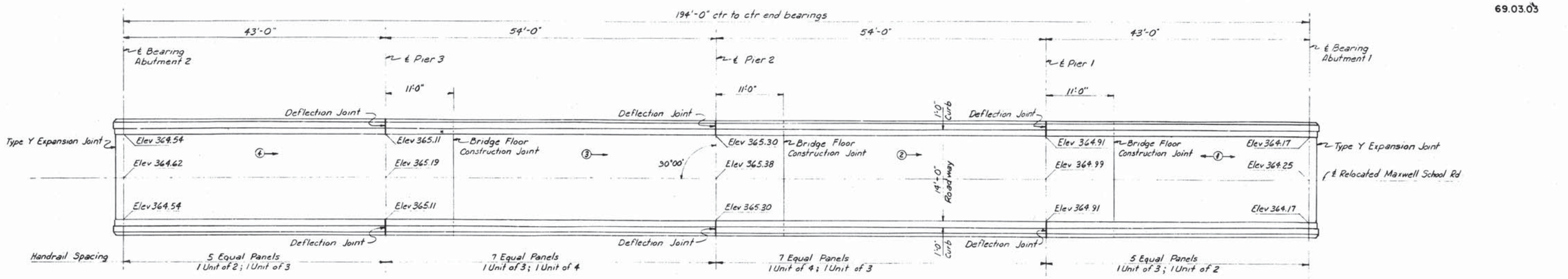

PLAN

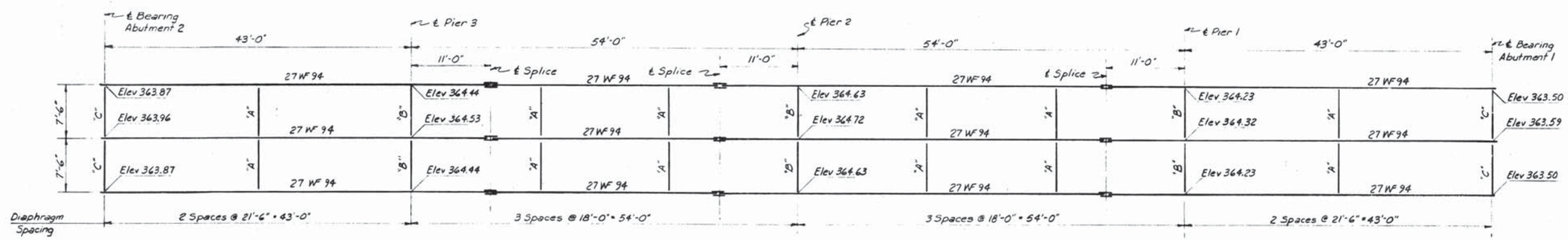

FRAMING PLAN

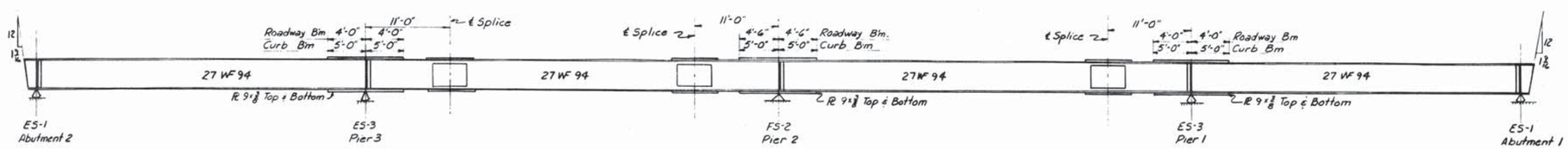

BEAM ELEVATION

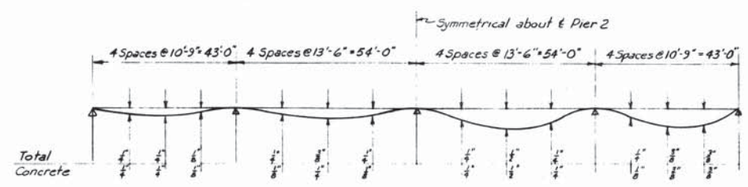

DEAD LOAD DEFLECTION DIAGRAM
(No Scale)

Notes: Elevations shown on Plan are to top of finished roadway.
Concrete placing sequence and direction noted thus: ②
Use 7" Bridge Floor (non-composite) as shown on Standard Drawing No 13.
Elevations shown on Framing Plan are to top of beam flange.
Type of diaphragm noted thus: "A", "B" or "C"
All stiffeners at points of support are 2L's 7 x 4 x 5/8
Bevel of beam end is true with respect to beam axis.

DRAWING 69.03.03

	BY	DATE				
MADE	W C M	7-21-54				
TRACED						
CHECKED	DHL	7-22-54	1	As-Built	HBW	12956
IN CHARGE OF	I. D. S. K.		No.	REVISION	BY	DATE

MAINE TURNPIKE AUTHORITY
MAINE TURNPIKE
SECTION 2 — PORTLAND TO AUGUSTA
STRUCTURE NO 69 TURNPIKE UNDER
MAXWELL SCHOOL ROAD
STA 4585 + 80.00
SUPERSTRUCTURE
HOWARD, NEEDLES, TAMMEN & BERGENDOFF
CONSULTING ENGINEERS
NEW YORK KANSAS CITY
SCALE: 1/8" = 1'-0"
CONTRACT NO.
SHEET NO. 311 OF 382