CONTRACT DOCUMENTS

CONTRACT 2015.12

INTERCHANGES 32, 36, AND 46 NB

TOLL SYSTEM UPGRADES

(MM 31.6, 35.7, AND 46.4)

MAINE TURNPIKE AUTHORITY

SPECIFICATIONS

The Specifications are divided into two parts:
Part I, General Provisions and Part II, Special Provisions.

The Maine Turnpike General Provisions and Special Provisions are additions and alterations to the Maine Department of Transportation Standard Specifications **Revision of December 2002**.

TABLE OF CONTENTS

	PAGE
NOTICE TO CONTRACTORS	N-1
PROPOSAL	P-1
CONTRACT AGREEMENT	C-1
CONTRACT BOND	CB-1
FINAL LIEN AND CLAIM WAIVER AND AFFIDAVIT	F-1

ARRANGEMENT OF SPECIFICATIONS

PART I - GENERAL PROVISIONS	GP-1
PART II - SPECIAL PROVISIONS	SP-1
PART III - APPENDICES (Part of Special Provisions)	AP-1

PART I - GENERAL PROVISIONS

SECTION	TITLE	PAGE
100	GENERAL PROVISIONS	
100.1	REPLACEMENT OF FORMER STANDARD SPECIFICATIONS AND DETAILS	GP-1
101	CONTRACT INTERPRETATION	
101.2	DEFINITIONS	GP-1
102	BIDDING	
102.1.1	BASIC REQUIREMENTS	GP-2
102.6	BID GUARANTY	GP-3
102.7.1	LOCATION AND TIME	GP-3
102.7.2	EFFECTS OF SIGNING AND DELIVERY OF BIDS	GP-3

PART I - GENERAL PROVISIONS - Continued

SECTION	TITLE	PAGE
103	AWARD AND CONTRACTING	
103.3.1	NOTICE AND INFORMATION GATHERING	GP-3
103.3.2	NOTICE OF DETERMINATION	GP-3
103.3.3	APPEAL	GP-4
103.4	NOTICE OF AWARD	GP-4
103.5.4	EXECUTION OF CONTRACT BY BIDDER	GP-4
103.8	EXECUTION OF CONTRACT BY DEPARTMENT	GP-5
104	GENERAL RIGHTS AND RESPONSIBILITIES	
104.2.1	FURNISHING OF RIGHT-OF-WAY	GP-5
104.2.3	AUTHORITY OF PROJECT MANAGER AND RESIDENT	GP-5
104.3.5	DUTIES REGARDING INSPECTION OF WORK	GP-5
104.3.7	LAWS TO BE OBSERVED	GP-6
104.3.8	WAGE RATES AND LABOR LAWS	GP-6
104.3.11	RESPONSIBILITY FOR PROPERTY OF OTHERS	GP-7
104.3.14	INTERPRETATION AND INTERPOLATION	GP-7
104.4.2	PRECONSTRUCTION CONFERENCE	GP-7
104.4.5	EARLY NEGOTIATION	GP-8
104.4.7	COOPERATION WITH OTHER CONTRACTORS	GP-8
104.4.10	COORDINATION OF BRIDGE CLOSURE/BRIDGE WIDTH RESTRICTION NOTIFICATION	GP-9
104.5.9	LANDSCAPE SUBCONTRACTORS	GP-9
105	GENERAL SCOPE OF WORK	
105.1	INTENT OF THE CONTRACT	GP-9

PART I - GENERAL PROVISIONS - Continued

SECTION	TITLE	PAGE
105.2.3	JOINT DUTY REGARDING SAFETY	GP-10
105.2.4.1	LOCKOUT/TAGOUT PROCEDURES	GP-10
105.4.1	MAINTENANCE DURING CONSTRUCTION	GP-10
105.4.3	MAINTENANCE DURING WINTER CONSTRUCTION	GP-11
105.5.1	GENERAL REQUIREMENTS	GP-11
105.6	CONSTRUCTION SURVEYING	GP-13
105.6.1	AUTHORITY PROVIDED SERVICES	GP-13
105.6.2	CONTRACTOR PROVIDED SERVICES	GP-13
105.6.2.1	QUALITY CONTROL	GP-13
105.6.3	QUALITY ASSURANCE	GP-13
105.6.4	BOUNDARY MARKERS	GP-14
105.7.1	GENERAL	GP-14
105.7.4	SUBMITTAL REQUIREMENTS	GP-15
105.8.1	TEMPORARY SOIL EROSION AND WATER POLLUTION CONTROL	GP-15
105.10	EQUAL OPPORTUNITY AND CIVIL RIGHTS	GP-16
105.10.1	REQUIREMENTS APPLICABLE TO FEDERALLY FUNDED CONTRACTS	GP-16
105.10.2	REQUIREMENTS APPLICABLE TO ALL CONTRACTS	GP-16
105.11	OTHER FEDERAL REQUIREMENTS	GP-17
105.12	LIMITATIONS OF OPERATIONS	GP-17
106	QUALITY	
106.3.3	SOURCES	GP-18
106.3.4	STORAGE	GP-18

SECTION	TITLE	PAGE
106.3.7	SAMPLING AND TESTING	GP-18
106.6	ACCEPTANCE	GP-18
106.8.3	UNAUTHORIZED WORK	GP-18
107	TIME	
107.1.1	SUBSTANTIAL COMPLETION	GP-19
107.3.1	GENERAL	GP-19
107.3.2	NIGHT WORK	GP-19
107.3.3	SUNDAYS AND HOLIDAYS	GP-20
107.4.2	SCHEDULE OF WORK REQUIRED	GP-20
107.4.4	SCHEDULE REVISIONS	GP-20
107.7.2	SCHEDULE OF LIQUIDATED DAMAGES	GP-20
107.9.1	FINAL CLEAN-UP AND FINISHING	GP-21
108	PAYMENT	
108.1	MEASUREMENT OF QUANTITIES FOR PAYMENT	GP-21
108.1.2	GENERAL MEASUREMENT PROVISIONS	GP-21
108.1.3	PROVISIONS RELATING TO CERTAIN MEASUREMENTS	GP-21
108.2.1	GENERATION OF PROGRESS PAYMENT ESTIMATES	GP-21
108.2.2	PAYMENT	GP-22
108.2.3	MOBILIZATION PAYMENTS	GP-22
108.3	RETAINAGE	GP-22
108.4	PAYMENT FOR MATERIALS OBTAINED AND STORED	GP-23
108.4.1	PRICE ADJUSTMENT FOR HOT MIX ASPHALT	GP-23
108.5	RIGHT TO WITHHOLD PAYMENT	GP-23

PART I - GENERAL PROVISIONS - Continued

SECTION	TITLE	PAGE
108.6	TAXES, FEES, ALLOWANCES, AND NOTICES	GP-24
108.8	FINAL PAYMENT	GP-24
109	CHANGES	
109.1.1	CHANGES PERMITTED	GP-24
109.1.2	SUBSTANTIAL CHANGES TO MAJOR ITEMS	GP-24
109.3	EXTRA WORK	GP-24
109.4	DIFFERING SITE CONDITIONS	GP-25
109.4.1	DEFINITION	GP-25
109.4.4	INVESTIGATION / ADJUSTMENT	GP-25
109.5.1	DEFINITIONS – TYPES OF DELAYS	GP-25
109.5.2	ENTITLEMENT TO ADJUSTMENTS	GP-25
109.5.5	DOCUMENTING THE DELAY AND REQUEST FOR ADJUSTMENTS	GP-26
109.5.6	DECISION BY PROGRAM MANAGER	GP-26
109.5.7	ADDITIONAL CONSIDERATION BY DEPARTMENT	GP-26
109.6.1	OVERVIEW – GENERAL REQUIREMENTS	GP-26
109.7.2	BASIS OF PAYMENT	GP-26
109.7.3	COMPENSABLE ITEMS	GP-26
109.7.5	FORCE ACCOUNT WORK	GP-27
110	INDEMNIFICATIONS, BONDING AND INSURANCE	
110.2.1	BONDS	GP-27
110.2.3	BONDING FOR LANDSCAPE SUBCONTRACTORS	GP-28
110.2.3	BONDING FOR LANDSCAPE ESTABLISHMENT PERIOD	GP-28

PART I - GENERAL PROVISIONS - Continued

SECTION	TITLE	PAGE
110.3	INSURANCE	GP-29
110.3.05	UMBRELLA LIABILITY	GP-29
110.3.2	COMMERCIAL GENERAL LIABILITY	GP-29
110.3.4	PROFESSIONAL LIABILITY	GP-29
110.3.5	OWNER'S AND CONTRACTOR'S PROTECTIVE LIABILITY	GP-30
110.3.6	BUILDER'S RISK INSURANCE	GP-30
110.3.8	ADMINISTRATIVE AND GENERAL PROVISIONS	GP-30
111	RESOLUTION OF DISPUTES	
111.1.2	ESCALATION PROCESS	GP-30
111.1.8	COMMISSIONER COMMUNICATIONS BEFORE APPEAL	GP-31
111.2	PROJECT LEVEL NEGOTIATION TO 111.6 JUDICIAL REVIEW	GP-31
112	DEFAULT AND TERMINATION	
112.2	TERMINATION	GP-31
203	EXCAVATION AND EMBANKMENT	
203.01	DESCRIPTION	GP-32
203.18	METHOD OF MEASUREMENT	GP-32
502	STRUCTURAL CONCRETE	
502.10	FORMS AND FALSE WORK	GP-32
502.11	PLACING CONCRETE	GP-32
502.15	CURING CONCRETE	GP-32
503	REINFORCING STEEL	
503.06	PLACING AND FASTENING	GP-33

SECTION	TITLE	PAGE
504	STRUCTURAL STEEL	
504.09	FACILITIES FOR INSPECTION	GP-33
504.18	PLATES FOR FABRICATED MEMBERS	GP-33
504.31	SHOP ASSEMBLY	GP-33
535	PRECAST, PRESTRESSED CONCRETE SUPERSTRUCTURE	
535.02	MATERIALS	GP-34
535.05	INSPECTION FACILITIES	GP-34
535.26	LATERAL POST-TENSIONING	GP-34
603	PIPE CULVERTS AND STORMDRAINS	
603.0311	CORRUGATED POLYETHYLENE PIPE FOR OPTION III	GP-34
604	MANHOLES, INLETS, AND CATCH BASINS	
604.02	MATERIALS	GP-34
605	UNDERDRAINS	
605.05	UNDERDRAIN OUTLETS	GP-35
606	GUARDRAIL	
606.02	MATERIALS	GP-35
606.09	BASIS OF PAYMENT	GP-35
615	LOAM	
615.02	MATERIALS	GP-35
618	SEEDING	
618.01	DESCRIPTION	GP-36
618.03	RATES OF APPLICATION	GP-36
618.09	CONSTRUCTION METHOD	GP-36

SECTION	TITLE	PAGE
618.15	TEMPORARY SEEDING	GP-36
620	GEOTEXTILES	
620.03	PLACEMENT	GP-36
620.07	SHIPMENT, STORAGE, PROTECTION AND REPAIR OF FABRIC	GP-36
620.09	BASIS OF PAYMENT	GP-36
621	LANDSCAPING	
621.0036	ESTABLISHMENT PERIOD	GP-37
626	HIGHWAY SIGNING	
626.034	CONCRETE FOUNDATIONS	GP-37
639	ENGINEERING FACILITIES	
639.04	FIELD OFFICES	GP-37
639.09	TELEPHONE	GP-37
639.11	BASIS OF PAYMENT	GP-38
652	MAINTENANCE OF TRAFFIC	
652.2	MATERIALS	GP-38
652.2.4	OTHER DEVICES	GP-38
652.2.5	SAFETY VESTS	GP-38
652.3.1	RESPONSIBILITY OF THE DEPARTMENT	GP-38
652.3.2	RESPONSIBILITY OF THE CONTRACTOR	GP-39
652.3.3	SUBMITTAL OF TRAFFIC CONTROL PLAN	GP-39
652.3.4	GENERAL	GP-39
652.3.41	LOCAL ROAD GENERAL REQUIREMENTS	GP-40

SECTION	TITLE	PAGE
652.3.5	INSTALLATION OF TRAFFIC CONTROL DEVICES	GP-41
652.3.6	TRAFFIC CONTROL	GP-42
652.41	TRAFFIC OFFICERS	GP-42
652.6	NIGHT WORK	GP-42
652.61	CONSTRUCTION VEHICLES	GP-42
652.7	METHOD OF MEASUREMENT	GP-42
652.8.2	OTHER ITEMS	GP-43
653	POLYSTYRENE PLASTIC INSULATION	
653.05	PLACING BACKFILL	GP-43
653.06	COMPACTION	GP-43
656	TEMPORARY SOIL EROSION AND WATER POLLUTION CONTROL	
656.01	DESCRIPTION	GP-43
656.02	GENERAL	GP-44
656.03	SILT FENCE	GP-44
656.04	TEMPORARY EROSION CHECKS	GP-45
656.041	EROSION CONTROL FILTER BERM	GP-45
656.05	TEMPORARY BERMS	GP-45
656.06	TEMPORARY SLOPE DRAINS	GP-45
656.07	DUMPED STONE	GP-45
656.08	SILT FENCE	GP-46
656.081	BOOM SUPPORTED FLOATING SILT FENCE	GP-46
656.082	MAINTENANCE	GP-46

SECTION	TITLE	PAGE
656.085	EROSION CONTROL COMPLIANCE OFFICER	GP-46
656.09	REMOVING AND DISPOSING	GP-47
656.10	METHOD OF MEASUREMENT	GP-47
656.11	BASIS OF PAYMENT	GP-47
701	STRUCTURAL CONCRETE RELATED MATERIALS	
701.10	FLY ASH – CHEMICAL REQUIREMENTS	GP-48
703	AGGREGATES	
703.06	AGGREGATE FOR BASE AND SUBBASE	GP-48
703.22	UNDERDRAIN BACKFILL MATERIAL	GP-49
706	NON-METALLIC PIPE	
706.06	CORRUGATED POLYETHYLENE PIPE FOR UNDERDRAIN, OPTION I AND OPTION II IN CULVERT PIPE	GP-49
709	REINFORCING STEEL AND WELDED STEEL WIRE FABRIC	
709.03	STEEL STRAND	GP-49
712	MISCELLANEOUS HIGHWAY MATERIALS	
712.07	TOPS AND TRAPS	GP-49
712.08	CORRUGATED METAL UNITS	GP-49
712.09	CATCH BASIN AND MANHOLE STEPS	GP-50
712.23	FLASHING LIGHTS	GP-50
712.32	COPPER TUBING	GP-51
712.33	NON-METALLIC PIPE, FLEXIBLE	GP-51
712.34	NON-METALLIC PIPE, RIGID	GP-51
712.341	METALLIC PIPE	GP-51

SECTION	TITLE	PAGE
712.35	EPOXY RESIN	GP-51
712.36	BITUMINOUS CURB	GP-52
712.37	PRECAST CONCRETE SLAB	GP-52
712.38	STONE SLAB	GP-52
717	ROADSIDE IMPROVEMENT MATERIAL	
717.03	C. METHOD #3 – ROADSIDE MIXTURE #3	GP-52
717.05	MULCH BINDER	GP-53

PART II - SPECIAL PROVISIONS

SECTION	TITLE	PAGE
__	GENERAL DESCRIPTION OF WORK	SP-1
__	PLANS	SP-1
101.2	DEFINITION	SP-1
102.11.2	CURABLE BID DEFECTS	SP-2
103.3	POST BID QUALIFICATIONS	SP-2
103.4	NOTICE OF AWARD	SP-2
104.3.8	WAGE RATES AND LABOR LAWS	SP-4
104.4.4	REQUEST FOR INFORMATION (RFI)	SP-8
104.4.6	UTILITY COORDINATION	SP-8
104.4.7	COOPERATION WITH OTHER CONTRACTORS	SP-9
105.2.4.2	LEAD PAINT	SP-9
105.2.4.3	ASBESTOS	SP-12
105.3	TRAFFIC CONTROL AND MANAGEMENT	SP-12
105.4.3	MAINTENANCE DURING WINTER CONSTRUCTION	SP-13
105.5.1	GENERAL REQUIREMENTS	SP-13
105.7.4	SUBMITTAL REQUIREMENTS	SP-13
105.8.1	TEMPORARY SOIL EROSION AND WATER POLLUTION CONTROL	SP-13
105.8.1.1	ENVIRONMENTAL STANDARDS	SP-15
105.8.1.11	WATER POLLUTION CONTROL REQUIREMENTS	SP-15
105.8.1.12	CONSTRUCTION REQUIREMENTS	SP-17
105.8.2	PERMIT REQUIREMENTS	SP-18
107.1	CONTRACT TIME AND CONTRACT COMPLETION DATE	SP-19

PART II – SPECIAL PROVISIONS - Continued

SECTION	TITLE	PAGE
107.1.1	SUBSTANTIAL COMPLETION	SP-19
107.4.2	SCHEDULE OF WORK REQUIRED	SP-19
107.4.6	PROSECUTION OF WORK	SP-20
107.4.7	LIMITATIONS OF OPERATIONS	SP-21
107.4.9	FAILURE TO STOP WORK WHEN DIRECTED	SP-22
107.7.2	SCHEDULE OF LIQUIDATED DAMAGES	SP-23
108.4	PAYMENT FOR MATERIALS OBTAINED AND STORED	SP-23
108.4.1	PRICE ADJUSTMENT FOR HOT MIX ASPHALT	SP-24
109.7.3	COMPENSABLE ITEMS	SP-25
202.	REMOVING STRUCTURES AND OBSTRUCTIONS (Removing Asbestos Containing Material)	SP-26
202.	REMOVING STRUCTURES AND OBSTRUCTIONS (Removing Existing Structural Concrete)	SP-28
202.	REMOVING STRUCTURES AND OBSTRUCTIONS (Removing Pavement Surface)	SP-29
203.	EXCAVATION AND EMBANKMENT	SP-30
206.	STRUCTURAL EXCAVATION	SP-36
401.	HOT MIX ASPHALT PAVEMENT	SP-38
403.	HOT MIX ASPHALT PAVEMENT	SP-59
403.	HOT MIX ASPHALT PAVEMENT (Hot Mix Asphalt, 12.5 mm (Polymer Modified))	SP-61
409.	BITUMINOUS TACK COAT	SP-63
419.	SAWING AND SEALING JOINTS IN BITUMINOUS PAVEMENT (Sawing Bituminous Pavement)	SP-64
502.	STRUCTURAL CONCRETE	SP-65

PART II – SPECIAL PROVISIONS - Continued

SECTION	TITLE	PAGE
	(Structural Concrete, Toll Plaza Slab on Grade)	
503.	REINFORCING STEEL (GRFP Reinforcing)	SP-95
503.	REINFORCING STEEL (Synthetic Fiber Reinforcement)	SP-99
506	FIELD COATING APPLICATION	SP-100
506	SHOP COATING APPLICATION	SP-115
511.	COFFERDAMS (Temporary Earth Support Systems)	SP-122
515.	PROTECTIVE COATING FOR CONCRETE SURFACES (Pigmented Concrete Protective Coating)	SP-127
515.	PROTECTIVE COATING FOR CONCRETE SURFACES (Clear Concrete Protective Coating)	SP-130
515.	PROTECTIVE COATING FOR CONCRETE SURFACES (Epoxy Overlay)	SP-133
518.	STRUCTURAL CONCRETE REPAIR (Concrete Slab Crack Repairs) (Partial Depth Concrete Slab Repairs Type I) (Partial Depth Concrete Slab Repairs Type II) (Full Depth Concrete Slab Repairs)	SP-138
524.	TEMPORARY STRUCTURAL SUPPORTS (Canopy Raising – Interchange 32)	SP-144
526.	CONCRETE BARRIER (Temporary Concrete Barrier Type I - Supplied by Authority)	SP-147
526.	CONCRETE BARRIER (Temporary Concrete Barrier Type I – Stormwater Filter)	SP-150
526.	CONCRETE BARRIER (Temporary Concrete Barrier Type I – Single Face)	SP-152
526.	CONCRETE BARRIER (Median Barrier Type 1 & Transition type 1)	SP-154

SECTION	TITLE	PAGE
527.	ENERGY ABSORBING UNIT (Energy Absorbing System (CAT) – Remove and Reset)	SP-157
527.	ENERGY ABSORBING UNIT (Energy Absorbing System (CAT) – Remove and Stack)	SP-158
527.	ENERGY ABSORBING UNIT (Work Zone Crash Cushion)	SP-159
603.	PIPE CULVERTS AND STORM DRAINS (Reinforced Concrete Pipe)	SP-161
604	MANHOLES, INLETS AND CATCH BASINS (Adjust Turnpike Manhole or Catch Basin to Grade)	SP-162
604	UNDERDRAIN (PVC Underdrain & Type B Bedding)	SP-164
606.	GUARDRAIL (Bridge Transition – Type III)	SP-166
606.	GUARDRAIL (Guardrail Beam)	SP-167
606.	GUARDRAIL (Guardrail Type 3d – Double Rail)	SP-168
606.	GUARDRAIL (Terminal End – Anchored End)	SP-169
606.	GUARDRAIL (Reflectorized Beam Guardrail Delineator)	SP-170
606.	GUARDRAIL (Delineator Post) (Remove and Reset Delineator Post)	SP-172
606.	GUARDRAIL (Guardrail – Remove and Reset)	SP-175
606.	GUARDRAIL (Guardrail – Remove, Stack and Dispose)	SP-177
606.	GUARDRAIL (Single Offset Block)	SP-178

PART II – SPECIAL PROVISIONS - Continued

SECTION	TITLE	PAGE
606.	GUARDRAIL (Guardrail Thrie Beam - Double Post, Nested Rail)	SP-180
606.	GUARDRAIL (Asymmetrical Thrie Beam Transition)	SP-184
606.	GUARDRAIL (Guardrail 350 FLEAT Terminal)	SP-182
607.	SNOW FENCE (Snow Fence – Interchange 36)	SP-184
609.	CURBING (Concrete Curb Type 2)	SP-185
610.	STONE FILL, RIPRAP, STONE BLANKET AND STONE DITCH PROTECTION (Stone Check Dams)	SP-186
618.	SEEDING	SP-188
619.	MULCH	SP-190
627.	PAVEMENT MARKINGS (Painted Pavement Markings)	SP-192
627.	PAVEMENT MARKINGS (Temporary Pavement Markings – Black Tape)	SP-194
627.	PAVEMENT MARKINGS (Temporary Raised Pavement Markers)	SP-196
631.	EQUIPMENT RENTAL	SP-198
634.	HIGHWAY LIGHTING (Replacement LED Fixture) (Remove and Reset Light Standard) (Remove and Stack Light Standard) (Conventional Light Standard with LED Fixture)	SP-200
639.	ENGINEERING FACILITIES (Field Office, Type B)	SP-203
643	TRAFFIC SIGNALS (Lane use Signal Modification)	SP-204

PART II – SPECIAL PROVISIONS - Continued

SECTION	TITLE	PAGE
643	TRAFFIC SIGNALS (Traffic Signal Remove and Relocate))	SP-205
645.	HIGHWAY SIGNING (Remove and Reset Sign) (Remove and Stack Sign)	SP-206
645.	HIGHWAY SIGNING (Remove and Reset Plaza Sign No. 10)	SP-208
652.	MAINTENANCE OF TRAFFIC (General)	SP-210
652.	MAINTENANCE OF TRAFFIC (Specific Project Maintenance of Traffic Requirements)	SP-213
652.	MAINTENANCE OF TRAFFIC (Temporary Toll Plaza Lane Closures)	SP-215
652.	MAINTENANCE OF TRAFFIC (Work Requiring Complete Stoppages of Traffic)	SP-217
652.	MAINTENANCE OF TRAFFIC (Temporary Flexible Delineator)	SP-219
652.	MAINTENANCE OF TRAFFIC (Portable Changeable Message Sign)	SP-221
655.	ELECTRICAL WORK	SP-223
655.	ELECTRICAL (Lightning Suppression System)	SP-257
655.	ELECTRICAL (LED Replacement Canopy Light Fixture)	SP-260
656.	TEMPORARY SOIL EROSION AND WATER POLLUTION CONTROL	SP-261
668.	TOLL BOOTH DUTCH DOOR INSTALLATION	SP-267
668.	TOLL BOOTH REPAIR	SP-268
673.	STORMWATER FILTER SYSTEM (Stormwater Soil Filter Bed)	SP-269

PART II – SPECIAL PROVISIONS - Continued

SECTION	TITLE	PAGE
719.	SIGNING MATERIAL	SP-271
800.	BUILDING AND STRUCTURES (Canopy Raising – Interchange 32)	SP-272
800.	BUILDING AND STRUCTURES (Manhole Removal & Electrical/Mechanical Pit Rehab)	SP-275
800.	BUILDING AND STRUCTURES (New Toll Booths and Canopy – Interchange 32 and 46)	SP-276
800.	BUILDING AND STRUCTURES (Canopy Roof Replacement – Interchange 32 and 36)	SP-278
800.	BUILDING AND STRUCTURES (New Canopy Sign Installation - Interchange 46 & 47)	SP-279
800.	BUILDING AND STRUCTURES (Overhead Lane Use Sign Installation)	SP-280
800.	MISCELLANEOUS INCIDENTALS	SP-281

PART III – APPENDICES

SECTION	TITLE	PAGE
APPENDIX A -	LEAD PAINT ASSESSMENT	AP - A1
APPENDIX B -	PLAZA SAFETY REQUIREMENTS	AP - B1
APPENDIX C -	DEFINED TERMS	AP - C1
APPENDIX D -	PLAZA WORK CHECKLIST	AP – D1
APPENDIX E -	PRODUCT DATA SHEETS	AP – E1

CONTRACT DOCUMENTS

CONTRACT 2015.12

INTERCHANGES 32, 36, and 46 NB

TOLL SYSTEM UPGRADES

(MM 31.6, 35.7, AND 46.4)

NOTICE TO CONTACTORS

PROPOSAL

CONTRACT AGREEMENT

CONTRACT BOND

FINAL LIEN AND CLAIM WAIVER AND AFFIDAVIT

SPECIFICATIONS

MAINE TURNPIKE AUTHORITY

NOTICE TO CONTRACTORS

Sealed Proposals will be received by the Maine Turnpike Authority for:

CONTRACT 2015.12

INTERCHANGES 32, 36, and 46 NB
TOLL SYSTEM UPGRADES
(MM 31.6, 35.7, AND 46.4)

at the office of the Maine Turnpike Authority, 2360 Congress Street, Portland, ME, until 11:00 a.m., prevailing time as determined by the Authority on October 08, 2015 at which time and place the Proposals will be publicly opened and read. Bids will be accepted from Contractors **prequalified** by the Maine Department of Transportation for Highway and Bridge Construction Projects with an electrical subcontractor **prequalified** by the Maine Department of Transportation for Traffic Signals and Lighting Projects. All other bids may be rejected. This Project includes a wage determination developed by the State of Maine Department of Labor.

This work includes the construction of a single new entry toll lane at Interchanges 32 and 46 as well as the complete reconstruction of the existing structural concrete slabs at the eight entrance lanes at Interchanges 32, 36, 46 Northbound and five exiting lanes at Interchanges 32 and 36; and all other work incidental thereto in accordance with the Plans and Specifications.

The work will also include upgrading the cash toll system at Interchanges 32, 36, and 46 Northbound including installation of tolling equipment in the utility buildings, canopy, toll booths, toll booth pits and islands; widening the northbound on ramp at Interchange 32; installation of signing and traffic control devices; maintenance of traffic; and all other work incidental thereto in accordance with the Plans and Specifications.

Plans and Contract documents may be examined by prospective bidders weekdays between 8:00 a.m. and 4:30 p.m. at the office of the Maine Turnpike Authority, 2360 Congress Street, Portland, Maine. The full size plans and Contract documents may be obtained from the Authority upon payment of One Hundred and Sixty-Five ($165.00) dollars for each set, which payment will not be returned. The half size plans and Contract documents may be obtained from the Authority upon payment of One Hundred and Ten ($110.00) dollars for each set, which payment will not be returned. Checks shall be made payable to: Maine Turnpike Authority. The plans, geotechnical report and Contract documents may also be downloaded from a link on our website at http://www.maineturnpike.com/project-and-planning/Construction-Contracts.aspx.

For general information regarding Bidding and Contracting procedures, contact Nate Carll, Purchasing Manager, at (207) 482-8115. For information regarding Schedule of Items, plan holders list and bid results, visit our website at http://www.maineturnpike.com/project-and-planning/Construction-Contracts.aspx . For Project specific information, fax all questions to Nate Carll, Purchasing Manager, at (207) 871-7739 or email questions to ncarll@maineturnpike.com. Responses will not be prepared for questions received by telephone. Bidders shall not contact any

other Authority staff or Consultants for clarification of Contract provisions, and the Authority will not be responsible for any interpretations so obtained.

All work shall be governed by the Specifications entitled "State of Maine, Department of Transportation, Standard Specifications, **Revision of December 2002**", "Standard Details, **Revision of December 2002**" and "Best Management Practices for Erosion and Sediment Control", latest issue. Copies and recent updates to these publications can be downloaded at: http://www.maine.gov/mdot/contractors/publications/.

Proposals must be accompanied by an original bid bond, certified or cashier's check payable to the Maine Turnpike Authority in an amount not less than Five (5%) Percent of the Total Amount in the Proposal, but not less than $500.00. The Bidder to whom a Contract is awarded will be required to furnish a Surety Corporation Bond, satisfactory to the Authority, on the standard Contract Bond form of the Authority, for a sum not less than the Total Amount of the Proposal.

Proposals must be made upon the Proposal Forms furnished by the Authority separately with the Contract Documents, and must be enclosed in the sealed special addressed envelope provided therefore bearing the name and address of the Bidder, the name of the Contract, and the date and time of Proposal opening on the outside.

A pre-bid conference will be held on September 22, 2015 at 11:00 a.m. at the Maine Turnpike Authority, 2360 Congress Street, Portland, Maine.

The Authority reserves the unqualified right to reject any or all Proposals and to accept that Proposal which in its sole judgment will under all circumstances serve its best interest.

MAINE TURNPIKE AUTHORITY

_____

Nate Carll
Purchasing Manager
Maine Turnpike Authority

Portland, Maine

Maine Turnpike Authority

MAINE TURNPIKE

PROPOSAL

CONTRACT 2015.12

INTERCHANGES 32, 36, and 46 NB
TOLL SYSTEM UPGRADES
(MM 31.6, 35.7, AND 46.4)

MAINE TURNPIKE AUTHORITY

PROPOSAL

CONTRACT 2015.12

INTERCHANGES 32, 36, and 46 NB
TOLL SYSTEM UPGRADES
(MM 31.6, 35.7, AND 46.4)

TO MAINE TURNPIKE AUTHORITY:

This work includes the construction of a single new entry toll lane at Interchanges 32 and 46 as well as the complete reconstruction of the existing structural concrete slabs at the eight entrance lanes at Interchanges 32, 36, 46 Northbound and five exiting lanes at Interchanges 32 and 36; and all other work incidental thereto in accordance with the Plans and Specifications.

The work will also include upgrading the cash toll system at Interchanges 32, 36, and 46 Northbound including installation of tolling equipment in the utility buildings, canopy, toll booths, toll booth pits and islands; widening the northbound on ramp at Interchange 32; installation of signing and traffic control devices; maintenance of traffic; and all other work incidental thereto in accordance with the Plans and Specifications.

This Work will be done under a Contract known as Contract 2015.12 according to the Plans and Specifications which are on file in the office of the Maine Turnpike Authority, 2360 Congress Street, Portland, Maine.

On the acceptance of this Proposal for said Work, the undersigned will give the required bond with good security conditioned for the faithful performance of said Work, according to said Plans and Specifications, and the doing of all other work required by said Specifications for the consideration herein named and with the further condition that the Maine Turnpike Authority shall be saved harmless from any and all damages that might accrue to any person, persons or property by reason of the carrying out of said Work, or any part thereof, or by reason of negligence of the undersigned, or any person or persons under his employment and engaged in said Work.

The undersigned hereby declares that he/she has carefully examined the Plans, Specifications and other Contract Documents, and that he/she will contract to carry out and complete the said Work as specified and delineated at the price per unit of measure for each scheduled item of Work stated in the Schedule of Prices as follows:

It is understood that the TOTAL AMOUNT stated by the undersigned in the following Schedule of Prices is based on approximate quantities and will be used solely for the comparison of bids, and that the quantities stated in the Schedule of Prices for the various items are estimates only and may be increased or decreased all as provided in the Specifications.

SCHEDULE OF BID PRICES
CONTRACT NO. 2015.12
INTERCHANGES 32, 36, AND 46 NB
TOLL SYSTEM UPGRADES
MM 31.6, 35.7, AND 46.4

Item No	Item Description	Units	Approx. Quantities	Unit Prices in Numbers		Bid Amount in Numbers	
				Dollars	Cents	Dollars	Cents
202.017	Removing Asbestos Containing Materials	Lump Sum	1				
202.17	Removing Existing Structural Concrete	Lump Sum	1				
202.202	Removing Pavement Surface	Square Yard	2,440				
203.20	Common Excavation	Cubic Yard	3,775				
203.45	Clay Borrow	Cubic Yard	14				
206.08	Structural Earth Excavation – Major Structures	Cubic Yard	198				
304.09	Aggregate Base Course - Crushed	Cubic Yard	625				
304.10	Aggregate Subbase Course - Gravel	Cubic Yard	2,079				
403.207	Hot Mix Asphalt, 19.0 mm Nominal Maximum Size	Ton	650				
403.2083	Hot Mix Asphalt, 12.5 mm Nominal Maximum Size, Surface	Ton	125				
403.209	Hot Mix Asphalt, 9.5 mm Nominal Maximum Size (sidewalks, drives, islands & incidentals)	Ton	211				

CARRIED FORWARD:

Item No	Item Description	Units	Approx. Quantities	Unit Prices in Numbers		Bid Amount in Numbers	
				Dollars	Cents	Dollars	Cents
			BROUGHT FORWARD:				
403.211	Hot Mix Asphalt (shimming)	Ton	25				
403.213	Hot Mix Asphalt, 12.5 mm Nominal Maximum Size, Base	Ton	960				
409.15	Bituminous Tack Coat, Applied	Gallon	576				
419.30	Sawing Bituminous Pavement	Linear Foot	4,635				
502.262	Structural Concrete, Pavement Slabs	Cubic Yard	488				
502.263	Structural Concrete - Plaza Islands, Bumpers Curtain Walls, and Barrier	Cubic Yard	191				
502.265	Structural Concrete - Utility Pits	Cubic Yard	42				
502.266	Structural Concrete - Gantry Pedestals & Footings	Cubic Yard	5				
503.14	Epoxy-Coated Reinforcing Steel, Fabricated and Delivered	Pound	31,200				
503.15	Epoxy-Coated Reinforcing Steel, Placing	Pound	31,200				
503.18	Glass Fiber Reinforced Polymer (GFRP) Reinforcing Bars, Fabricated and Delivered - Entry Lanes	Pound	45,000				
503.19	Glass Fiber Reinforced Polymer (GFRP) Reinforcing Bars, Placing	Pound	45,000				

CARRIED FORWARD:

Item No	Item Description	Units	Approx. Quantities	Unit Prices in Numbers		Bid Amount in Numbers	
				Dollars	Cents	Dollars	Cents
			BROUGHT FORWARD:				
503.90	Synthetic Fiber Reinforcement	Pound	2,442				
506.14	Field Painting of Existing Steel	Lump Sum	1				
506.17	Surface Preparation of Existing Steel	Lump Sum	1				
506.18	Containment System and Pollution Control Measures	Lump Sum	1				
506.191	Disposal of Hazardous or Toxic Material	Lump Sum	1				
511.091	Temporary Earth Support Systems	Lump Sum	1				
515.201	Pigmented Protective Coating for Concrete Surfaces	Square Yard	150				
515.202	Clear Protective Coating for Concrete Surfaces	Square Yard	1,990				
515.23	Epoxy Overlay	Square Yard	100				
518.64	Concrete Slab Crack Repairs	Linear Foot	40				
518.81	Partial Depth Concrete Island Repairs Type I ; <2”	Square Foot	105				
518.82	Partial Depth Concrete Island Repairs Type II; 2-6”	Square Foot	105				

CARRIED FORWARD:

Item No	Item Description	Units	Approx. Quantities	Unit Prices in Numbers		Bid Amount in Numbers	
				Dollars	Cents	Dollars	Cents
			BROUGHT FORWARD:				
518.83	Full Depth Concrete Island Repairs, > 6”	Square Foot	42				
526.306	Temporary Concrete Barrier Type I - Supplied by Authority	Lump Sum	1				
526.307	Concrete Barrier Type I - Stormwater Filter	Linear Foot	40				
526.308	Temporary Concrete Barrier, Type I - Single Face	Lump Sum	1				
526.351	Median Barrier Type I - Precast	Linear Foot	369				
526.361	Median Barrier Transition Type I - Precast	Each	2				
527.303	Energy Absorbing System (CAT) - Remove and Reset	Each	1				
527.305	Energy Absorbing System (CAT) - Remove and Stack	Each	1				
527.341	Work Zone Crash Cushions - TL-3	Unit	3				
527.342	Work Zone Crash Cushions - TL-2	Unit	1				
603.159	12 inch Culvert Pipe Option III	Linear Foot	57				
604.164	Rebuilding Catch Basin	Each	1				

CARRIED FORWARD:

Item No	Item Description	Units	Approx. Quantities	Unit Prices in Numbers		Bid Amount in Numbers	
				Dollars	Cents	Dollars	Cents
			BROUGHT FORWARD:				
605.090	6 Inch Underdrain Type B	Linear Foot	155				
605.016	6 Inch PVC Underdrain	Linear Foot	340				
605.018	8 Inch PVC Underdrain	Linear Foot	320				
605.040	Underdrain Type B Bedding	Cubic Yard	180				
606.1723	Bridge Transition Type III	Each	6				
606.178	Guardrail Beam	Linear Foot	100				
606.24	Guardrail Type 3d - Single Rail	Linear Foot					
606.2401	Guardrail Type 3d - Double Rail	Linear Foot	412.5				
606.278	Terminal End - Anchored End	Each	1				
606.279	Terminal End - Anchored End, Thrie Beam	Each	1				
606.352	Reflectorized Beam Guardrail Delineator	Each	40				
606.353	Delineator Post	Each	8				

CARRIED FORWARD:

Item No	Item Description	Units	Approx. Quantities	Unit Prices in Numbers		Bid Amount in Numbers	
				Dollars	Cents	Dollars	Cents
			BROUGHT FORWARD:				
606.354	Delineator Post - Remove and Reset	Each	14				
606.3607	Guardrail - Remove and Reset, Single Rail	Linear Foot	50				
606.3608	Guardrail - Remove and Reset, Double Rail	Linear Foot	350				
606.3631	Guardrail - Remove, Stack and Dispose	Linear Foot	562.5				
606.471	Single Offset Block - W-Beam	Each	20				
606.48	Single Galvanized Steel Post	Each	40				
606.65	Guardrail Thrie Beam - Single Rail	Linear Foot	62.5				
606.651	Guardrail Thrie Beam - Double Post, Nested Rail	Linear Foot	50				
606.701	Asymmetrical Thrie Beam Transition	Each	1				
606.80	Guardrail 350 FLEAT Terminal	Each	5				
606.81	Guardrail 350 FLEAT Terminal - Remove and Reset	Each	1				
607.4311	Snow Fence	Linear Foot	40				

CARRIED FORWARD:

Item No	Item Description	Units	Approx. Quantities	Unit Prices in Numbers		Bid Amount in Numbers	
				Dollars	Cents	Dollars	Cents
			BROUGHT FORWARD:				
608.08	Reinforced Concrete Sidewalk	Square Yard	65				
609.11	Vertical Curb Type 1	Linear Foot	290				
609.12	Vertical Curb Type 1 - Circular	Linear Foot	90				
609.191	Concrete Curb Type 2	Linear Foot	90				
609.234	Terminal Curb Type 1 - 4' Sections	Each	1				
609.237	Terminal Curb Type 1 - 7' Sections	Each	1				
609.26	Curb Transition Type B	Each	2				
609.34	Curb Type 5	Linear Foot	410				
609.35	Curb Type 5 - Circular	Linear Foot	7				
610.18	Stone Ditch Protection	Cubic Yard	27				
610.181	Temporary Stone Check Dam	Cubic Yard	18				
613.319	Erosion Control Blanket	Square Yard	980				

CARRIED FORWARD:

Item No	Item Description	Units	Approx. Quantities	Unit Prices in Numbers		Bid Amount in Numbers	
				Dollars	Cents	Dollars	Cents
			BROUGHT FORWARD:				
615.07	Loam	Cubic Yard	460				
618.1301	Seeding Method Number 1, Plan Quantity	Unit	4				
618.1401	Seeding Method Number 2, Plan Quantity	Unit	28				
618.1411	Seeding Method Number 3, Plan Quantity	Unit	7				
618.143	Special Seeding	Unit	8.1				
619.1201	Mulch, Plan Quantity	Unit	39				
619.1202	Temporary Mulch	Lump Sum	1				
620.58	Erosion Control Geotextile	Square Yard	700				
626.11	Precast Concrete Junction Box	Each	9				
626.31	18 Inch Foundation	Each	5				
626.32	24 Inch Foundation	Each	14				
626.331	36 Inch Foundation	Each	1				

CARRIED FORWARD:

Item No	Item Description	Units	Approx. Quantities	Unit Prices in Numbers		Bid Amount in Numbers	
				Dollars	Cents	Dollars	Cents
			BROUGHT FORWARD:				
627.73	Temporary 6 Inch Pavement Marking Tape	Linear Foot	6,190				
627.731	Temporary 6 Inch Black Pavement Marking Tape	Linear Foot	4,020				
627.77	Remove Existing Pavement Markings	Square Foot	40				
627.812	Temporary Raised Pavement Markers	Each	100				
629.05	Hand Labor, Straight Time	Hour	40				
631.10	Air Compressor (including operator)	Hour	40				
631.11	Air Tool (including operator)	Hour	40				
631.12	All Purpose Excavator (including operator)	Hour	40				
631.171	Truck - small (including operator)	Hour	40				
631.32	Culvert Cleaner (including operators)	Hour	40				
631.36	Foreman	Hour	40				
631.50	Jackhammer (air tool including operator)	Hour	40				

CARRIED FORWARD:

Item No	Item Description	Units	Approx. Quantities	Unit Prices in Numbers		Bid Amount in Numbers	
				Dollars	Cents	Dollars	Cents
			BROUGHT FORWARD:				
631.51	Bucket Truck	Hour	40				
631.52	Scissor Lift	Hour	40				
631.53	Electrician	Hour	40				
631.54	Electrician's Apprentice	Hour	40				
631.55	Plumber	Hour	40				
634.175	Replacement LED Fixture	Each	4				
634.208	Remove and Reset Light Standard	Each	5				
634.209	Remove and Stack Light Standard	Each	2				
634.21	Conventional Light Standard	Each	8				
639.191	Field Office, Type B	Each	1				
643.711	Lane Use Signal Installation	Each	10				
643.712	Traffic Signal Remove and Relocate	Each	1				

CARRIED FORWARD:

Item No	Item Description	Units	Approx. Quantities	Unit Prices in Numbers		Bid Amount in Numbers	
				Dollars	Cents	Dollars	Cents
			BROUGHT FORWARD:				
645.105	Remove and Stack Sign	Each	2				
645.109	Remove and Reset Sign	Each	14				
645.161	Breakaway Device Single Pole	Each	8				
645.162	Breakaway Device Multi Pole	Each	2				
645.251	Roadside Guide Signs, Type I	Square Foot	20				
645.271	Regulatory, Warning, Confirmation and Route Assembly Sign, Type I	Square Foot	100				
645.289	Steel H-Beam Poles	Pound	360				
645.501	Remove and Reset Plaza Sign No. 10	Lump Sum	1				
652.30	Flashing Arrow	Each	1				
652.312	Type III Barricades	Each	3				
652.33	Drum	Each	180				
652.34	Cone	Each	20				

CARRIED FORWARD:

Item No	Item Description	Units	Approx. Quantities	Unit Prices in Numbers		Bid Amount in Numbers	
				Dollars	Cents	Dollars	Cents
			BROUGHT FORWARD:				
652.341	Temporary Flexible Delineator	Each	82				
652.35	Construction Signs	Square Foot	995				
652.361	Maintenance of Traffic Control Devices	Lump Sum	1				
652.41	Portable-Changeable Message Sign	Each	2				
655.012	Installation of Cash Lane Controller Cabinet	Each	14				
655.02	DVAS Mount Installation	Each	14				
655.04	Installation of Sensor Loops	Lump Sum	1				
655.05	Installation of AVI Antennas	Each	2				
655.06	Installation of AVI Readers	Each	1				
655.07	Traffic Control Pedestal Preparation Work	Each	10				
655.08	#2/0 Wire for UPS re-wiring	Linear Foot	200				
655.09	Armor Cable - 10/3	Linear Foot	360				

CARRIED FORWARD:

Item No	Item Description	Units	Approx. Quantities	Unit Prices in Numbers		Bid Amount in Numbers	
				Dollars	Cents	Dollars	Cents
			BROUGHT FORWARD:				
655.10	#4 AWG Wire	Linear Foot	1,400				
655.101	#6 AWG Wire	Linear Foot	5,400				
655.11	#10 AWG Wire	Linear Foot	2,750				
655.12	#12 AWG Wire	Linear Foot	20,100				
655.13	#14 AWG Wire	Linear Foot	500				
655.14	4pr/24 (Category 5e) Cable	Linear Foot	12,500				
655.15	LMR 400 Cable	Linear Foot	300				
655.16	Fiber Optic Cable – 6 Fiber	Linear Foot	1,820				
655.17	IVIS Homerun Loop Cable (IMSA 50-2 #16)	Linear Foot	600				
655.200	1 1/2" Schedule 40 PVC Conduit	Linear Foot	60				
655.201	3" Schedule 40 PVC Conduit	Linear Foot	40				
655.202	4" Schedule 40 PVC Conduit	Linear Foot	200				

CARRIED FORWARD:

Item No	Item Description	Units	Approx. Quantities	Unit Prices in Numbers		Bid Amount in Numbers	
				Dollars	Cents	Dollars	Cents
			BROUGHT FORWARD:				
655.2021	1" Schedule 80 PVC Conduit	Linear Foot	250				
655.203	1 1/2" Schedule 80 PVC Conduit	Linear Foot	1,275				
655.2031	2" Schedule 80 PVC Conduit	Linear Foot	500				
655.204	3" Schedule 80 PVC Conduit	Linear Foot	95				
655.205	4" Schedule 80 PVC Conduit	Linear Foot	20				
655.206	1" Galvanized Rigid Metal Conduit	Linear Foot	430				
655.2061	3/4" Galvanized Rigid Metal Conduit	Linear Foot	20				
655.207	1 1/2" Galvanized Rigid Metal Conduit	Linear Foot	320				
655.2071	2" Galvanized Rigid Metal Conduit	Linear Foot	480				
655.208	3" Galvanized Rigid Metal Conduit	Linear Foot	60				
655.209	1/2" Liquid Tight Metallic Flexible Conduit	Linear Foot	20				
655.210	3/4" Liquid Tight Metallic Flexible Conduit	Linear Foot	20				

CARRIED FORWARD:

Item No	Item Description	Units	Approx. Quantities	Unit Prices in Numbers		Bid Amount in Numbers	
				Dollars	Cents	Dollars	Cents
			BROUGHT FORWARD:				
655.2101	1 1/2" Liquid Tight Metallic Flexible Conduit	Linear Foot	60				
655.2102	2" Liquid Tight Metallic Flexible Conduit	Linear Foot	60				
655.211	1 1/2" Electrical Metallic Tubing Conduit	Linear Foot	20				
655.212	2" Electrical Metallic Tubing Conduit	Linear Foot	20				
655.215	3/4" Electrical Metallic Tubing Conduit	Linear Foot	20				
655.216	1" Rigid Metal Conduit Conduits	Each	14				
655.217	1 1/2" Rigid Metal Conduit Conduits	Each	48				
655.218	2" Rigid Metal Conduit Conduits	Each	52				
655.219	3" Rigid Metal Conduit Conduits	Each	8				
655.221	Type A 4”x4”x2” interior, Pull Box	Each	15				
655.222	Type C 12”x12”x6” NEMA 4x Pull Box	Each	25				
655.223	Type D 12”x 12” x6” S.S. NEMA 4x Pull Box	Each	8				

CARRIED FORWARD:

Item No	Item Description	Units	Approx. Quantities	Unit Prices in Numbers		Bid Amount in Numbers	
				Dollars	Cents	Dollars	Cents
			BROUGHT FORWARD:				
655.224	Type E 6”x6”x6” interior Steel Pull Box	Each	6				
655.225	Type F 4”x4”x4” exterior plastic Pull Box	Each	22				
655.226	Type G 8.5”x6.5”x 6” Quazite Pull Box	Each	4				
655.227	Type H 21”x15”x16” Quazite Pull Box	Each	3				
655.30	12" x 12" x 6" Galvanized Junction Box	Each	2				
655.31	18" x 18" x 6" Galvanized Junction Box	Each	2				
655.40	24" x 24" x 12" Junction Box	Each	2				
655.42	36” x 30” x 20” NEMA 4X Cabinet	Each	1				
655.63	4-inch x 4-inch Plastic NEMA 4R Wireway	Linear Foot	48				
655.64	6-inch x 6-inch Plastic NEMA 4R Wireway	Linear Foot	44				
655.71	Removal of Existing Select Toll Equipment	Lump Sum	1				
655.80	Lightning Suppression System	Each	5				

CARRIED FORWARD:

Item No	Item Description	Units	Approx. Quantities	Unit Prices in Numbers		Bid Amount in Numbers	
				Dollars	Cents	Dollars	Cents
			BROUGHT FORWARD:				
655.81	Key Switch	Each	22				
655.82	Duplex Receptacle	Each	15				
655.83	NEMA L5-30R Receptacle	Each	6				
655.91	LED Canopy Light Fixture Install or Replace	Each	20				
656.50	Baled Hay, in place	Each	10				
656.60	Temporary Berms	Linear Foot	1,660				
656.62	Temporary Slope Drains	Linear Foot	70				
656.632	30" Temporary Silt Fence	Linear Foot	1,320				
659.10	Mobilization	Lump Sum	1				
668.011	Dutch Door Installation	Each	9				
668.012	Toll Booth Repair	Lump Sum	1				
673.01	Stormwater Soil Filter Bed	Cubic Yard	230				

CARRIED FORWARD:

Item No	Item Description	Units	Approx. Quantities	Unit Prices in Numbers		Bid Amount in Numbers	
				Dollars	Cents	Dollars	Cents
				BROUGHT FORWARD:			
800.101	Raising Canopy - Interchange 32	Lump Sum	1				
800.201	Manhole Removal & Electrical/Mechanical Pit Rehab	Lump Sum	1				
800.501	New Toll Booth and Canopy - Interchange 32 and 46	Lump Sum	1				
800.601	Canopy Roof Replacement - Interchange 32 and 36	Lump Sum	1				
800.701	New Canopy Sign Installation - Interchange 46 & 47	Each	2				
800.801	Overhead Lane Use Sign	Lump Sum	1				
					TOTAL:		

Acknowledgment is hereby made of the following Addenda received since issuance of the Plans and Specifications: _____
_____
_____

We will enter into a Contract with the following electrical contractor prequalified by the Maine Department of Transportation for Traffic Signals and Lighting Projects for all the 655 pay item work if awarded the Project_____.

Accompanying this Proposal is an original bid bond, cashiers or certified check on _____ Bank, for _____, payable to the Maine Turnpike Authority. In case this Proposal shall be accepted by the Maine Turnpike Authority and the undersigned should fail to execute a Contract with, and furnish the security required by the Maine Turnpike Authority as set forth in the Specifications, within the time fixed therein, an amount of money equal to Five (5%) Percent of the Total Amount of the Proposal for the Contract awarded to the undersigned, but not less than $500.00, obtained out of the original bid bond, cashier's or certified check, shall become the property of the Maine Turnpike Authority; otherwise the check will be returned to the undersigned.

The performance of said Work under this Contract will be completed during the time specified in Subsection 107.1.

It is agreed that time is of the essence of this Contract and that I (we) will, in the event of my (our) failure to complete the Work within the time limit named above, pay to the Maine Turnpike Authority liquidated damages in the amount or amounts stated in the Specifications.

The undersigned is an Individual/Partnership/Corporation under the laws of the State of _____, having principal office at _____, thereunto duly authorized.

_____ *(SEAL)*

_____ *(SEAL)*

Affix Corporate Seal
or Power of Attorney
Where Applicable

_____ *(SEAL)*

By: _____

Its: _____

Information below to be typed or printed where applicable:

INDIVIDUAL:

(Name)	(Address)

PARTNERSHIP - Name and Address of General Partners:

(Name)	(Address)
(Name)	(Address)
(Name)	(Address)
(Name)	(Address)

INCORPORATED COMPANY:

(President)	(Address)
(Vice-President)	(Address)
(Secretary)	(Address)
(Treasurer)	(Address)

MAINE TURNPIKE AUTHORITY

MAINE TURNPIKE

YORK TO AUGUSTA

CONTRACT AGREEMENT

This Agreement made and entered into between the Maine Turnpike Authority, and sometimes termed the "Authority", and _____

_____

herein termed the "Contractor":

WITNESSETH: That the Authority and the Contractor, in consideration of the premises and of the mutual covenants, considerations and agreements herein contained, agree as follows:

FIRST: The parties hereto mutually agree that the documents attached hereto and herein incorporated and made a part hereof collectively evidencing and constituting the entire Contract to the same extent as if herein written in full, are the Notice to Contractors, the Accepted Proposal, the Specifications, the Plans, this Agreement, the Contract Bond and all Addenda to the Contract Documents duly issued and herewith enumerated:

_____

_____

SECOND: The Contractor for and in consideration of certain payments to be made as hereafter specified, hereby covenants and agrees to perform and execute all of the provisions of this Contract and of all documents and parts attached hereto and made a part thereof, and at his own cost and expense to furnish and perform everything necessary and required to construct and complete, ready for its intended purpose, in accordance with the Contract and such instructions as the Engineer may give, acceptable to the Authority, in the times provided, all of the Work covered and included under Contract No. _____ covering _____ as herein described.

THIRD: In consideration of the performance by the Contractor of his covenants and agreements as herein set forth, the Authority hereby covenants and agrees to pay the Contractor according to the Schedule of Prices set forth in the Proposal with additions and deductions as elsewhere herein provided in the times and in the manner stated in the Specifications. This Agreement shall insure to the benefit of, and shall be binding upon the parties hereto, and upon their respective successors and assigns; but neither party hereto shall assign or transfer his interest herein in whole or in part without the consent of the other, except as herein provided.

IN WITNESS WHEREOF the parties to this Agreement have executed the same in duplicate.

AUTHORITY -

MAINE TURNPIKE AUTHORITY

By: _____

Title: CHAIRMAN

Date of Signature: _____

ATTEST:

_____
Secretary

CONTRACTOR -

_____
CONTRACTOR

By: _____

Title: _____

Date of Signature: _____

WITNESS:

_____

CONTRACT BOND

KNOW ALL MEN BY THESE PRESENTS that _____

of _____ in the County of _____ and State of _____

as Principal, and _____ a Corporation duly organized under

the laws of the State of _____ and having a usual place of business in _____

_____

As Surety, are held and firmly bound unto the Maine Turnpike Authority in the sum of _____Dollars ($_____.___), to be paid to said Maine Turnpike Authority, or its successors, for which payment, well and truly to be made, we bind ourselves, our heirs, executors, successors and assigns jointly and severally by these presents.

The condition of this obligation is such that the Principal, designated as Contractor in the foregoing Contract No. _____ shall faithfully perform the Contract on his part and satisfy all claims and demands incurred for the same and shall pay all bills for labor, material, equipment and all other items contracted for, or used by him, in connection with the Work contemplated by said Contract, and shall fully reimburse the Obligee for all outlay and expense which the Obligee may incur in making good any default of said Principal, then this Obligation shall be null and void; otherwise it shall remain in full force and effect.

Signed and sealed this _____ day of _____, A.D., 201___

Witnesses:	CONTRACTOR	
_____	_____	*(SEAL)*
_____	_____	*(SEAL)*
_____	_____	*(SEAL)*
	SURETY	
_____	_____	*(SEAL)*
_____	_____	*(SEAL)*
_____	_____	*(SEAL)*

(Surety must attach copy of Power of Attorney showing authority of Office or Agent to execute bonds)

FINAL LIEN AND CLAIM WAIVER AND AFFIDAVIT

Upon receipt of the sum of _____, which sum represents the total amount paid, including the current payment for work done and materials supplied for Project No. _____, in _____, Maine, under the undersigned's Contract with the Maine Turnpike Authority.

The undersigned, on oath, states that the Final Payment of _____ is the final payment for all work, labor, materials, services and miscellaneous (all of which are hereinafter referred to as "Work Items") supplied to the said Project through _____and that no additional sum is claimed by the undersigned respecting said Project.

The undersigned, on oath, states that all persons and firms who supplied Work Items to the undersigned in connection with said Project have been fully paid by the undersigned for such Work Items or that such payment will be fully effected immediately upon receipt of this payment.

In consideration of the payment herewith made, the undersigned does fully and finally release and hold harmless the Maine Turnpike Authority, and its Surety, if any, from any and all claims, liens or right to claim or lien, arising out of this Project under any applicable bond, law or statute.

It is understood that this Affidavit is submitted to assure the Owner and others that all liens and claims relating to the Work Items furnished by the undersigned are paid.

_____
(Contractor)

By: _____

Title: _____

State of MAINE

County of _____

I, _____, hereby certify on behalf of _____
(Company Officer) *(Company Name)*

its _____, being first duly sworn and stated that the foregoing representations are
(Title)

are true and correct upon his own knowledge and that the foregoing is his free act and deed in said capacity and the free act and deed of the above-named _____.
(Company Name)

The above-named, _____, personally appeared before me this ____ day of _____ and swears that this is his free act and deed.

(SEAL)

_____
Notary Public

My Commission Expires: _____

MAINE TURNPIKE AUTHORITY

SPECIFICATIONS

PART I – GENERAL PROVISIONS

(Rev. May 18, 2009)

DIVISION 100 - GENERAL PROVISIONS

100.1 Replacement of Former Standard Specifications and Details

The following paragraphs are added:

The Maine Department of Transportation Standard Specifications Revisions of 2002 as modified herein is referenced and incorporated in all Maine Turnpike Authority Construction Contracts. These Maine Turnpike General Provisions replace all previous Maine Turnpike General Provisions and are additions and alterations to the Maine Department of Transportation Standard Specifications. Maine Department of Transportation Consolidated Special Provisions or corrections, additions, and revisions to their Standard Specifications are not referenced or incorporated unless specifically included in the Contract. Applicable MaineDOT December 28, 2004 Consolidated Special Provisions, corrections, additions, and revisions have been incorporated into this document.

All references to components or employees of the Maine Department of Transportation listed in Column A shall also refer to components or employees of the Maine Turnpike Authority in Column B unless otherwise stated.

A	B
Maine Department of Transportation	Maine Turnpike Authority
Department	Authority
Commissioner	Executive Director
Contracts Engineer	Purchasing Manager
Contracts Section	Purchasing Department
Chief Engineer	Director of Engineering
Bureau of Project Development	Maine Turnpike Authority

SECTION 101 – CONTRACT INTERPRETATION

101.2 Definitions

The following definitions are added or revised:

Authority - The Maine Turnpike Authority, a body corporate and politic duly created and existing under and by virtue of an act of the Legislature of the State of Maine, Chapter 69 of the Private and Special Laws of 1941, as amended.

Award - The resolution of the Authority at an official meeting expressly authorizing the Executive Director or his designee to notify the successful Bidder that his/her Proposal has been accepted and that he/she is required to execute the Contract Agreement and to furnish satisfactory Bonds.

Environmental Information - Hazardous waste assessments, dredge material test results, boring logs, geophysical studies, and other records and reports of the environmental conditions. For a related provision, see Subsection 104.3.14, Interpretation and Interpolation.

Fabrication Engineer - The Department's representative responsible for Quality Assurance of pre-fabricated products that are produced off-site.

Geotechnical Information - Replace with the following: "Boring logs, soil reports, geotechnical design reports, ground penetrating radar evaluations, seismic refraction studies, and other records of subsurface conditions. For a related provision, see Subsection 104.3.14, Interpretation and Interpolation.

Holidays - The following are extended to include the Holiday Period:

HOLIDAY	HOLIDAY PERIOD
Martin Luther King Day	12:01 a.m. (Midnight) to 11:59 p.m. Martin Luther King Day.
President's Day	12:01 a.m. (Midnight) preceding Friday to 12:01 p.m. following Tuesday.
Easter	12:01 a.m. (Midnight) preceding Friday to 12:01 p.m. following Monday.
Memorial Day	12:01 p.m. preceding Thursday to 6:00 a.m. following Tuesday.
Labor Day	12:01 p.m. preceding Thursday to 6:00 a.m. following Tuesday.
Columbus Day	12:01 a.m. (Midnight) preceding Friday to 12:01 p.m. following Tuesday.
Veterans' Day	12:01 a.m. (Midnight) to 11:59 p.m. Veterans' Day.
Thanksgiving Day	12:01 a.m. (Midnight) preceding Wednesday to 12:01 p.m. following Monday.

Project - The following sentence is added:

All the Work to be performed under the Contract.

Solicitation - Contract proposal sent to a select list of Contractors. Solicitations do include a requirement for a bid bond. Solicitations do not need Maine Turnpike Board Approval for an award.

Turnpike - The entire toll highway, including all approaches, bridges, interchanges, toll facilities, and structures owned by the Maine Turnpike Authority, and authorized by Chapter 69, Private and Special Laws of Maine, 1941, as amended, and located on properties held in the name of the Authority.

Working Day - The Contractor shall not work during the period from 1/2-hour after sunset to 1/2-hour before sunrise, unless otherwise approved by the Resident.

If, after approval, Work is performed on a Saturday, Sunday, or a holiday, the day shall be considered a Working Day.

SECTION 102 - BIDDING

102.1.1 Basic Requirements

This Subsection is amended by the addition of the following:

To be eligible to Bid, prospective Bidders must not have been debarred or suspended from Bidding by the Authority or the Maine Department of Transportation.

102.6 Bid Guaranty

The second paragraph is deleted and replaced with the following:

No Proposal will be considered unless accompanied by a "Proposal Guaranty" in the form of an original bid bond, certified or cashier's check in favor of the Maine Turnpike Authority, in the amount of not less than five (5%) percent of the Total Amount of the Proposal, except that the amount of the check or Proposal Guaranty shall not be less than $500.00. Solicitations do not require a Bid Guaranty.

Sentence (C) of the third paragraph is deleted and not replaced.

102.7.1 Location and Time

The first paragraph is deleted and replaced with the following:

The Proposal and the Proposal Guaranty shall be enclosed in a sealed envelope furnished by the Authority for this purpose, and shall bear on the outside, the name and address of the Bidder as well as the designation of the Project as named in the Proposal form. Proposals will be received at the place and time stated in the Notice to Contractors, Solicitation, or Addendum as determined by the Authority. Proposals received after the time for opening of bids will be returned to the Bidder unopened. See also Subsection 102.11, Bid Responsiveness.

102.7.2 Effects of Signing and Delivery of Bids

Paragraph C, Certifications, is deleted and not replaced.

SECTION 103 - AWARD AND CONTRACTING

103.3.1 Notice and Information Gathering

This Subsection is deleted and replaced with the following:

The Authority will review the Bid Proposals. As a condition for Award of a Contract, the Authority may require an Apparent Successful Bidder to demonstrate to the Authority's satisfaction that the Bidder is responsible and qualified to perform the Work. If such information is required, the Authority, or the Authority’s agent, will contact the Apparent Successful Bidder and request specific information. If requested by the Apparent Successful Bidder, this request can be in writing. The Apparent Successful Bidder shall respond to the request within 24-hours (one work day) unless both parties agree in writing to extend the deadline.

103.3.2 Notice of Determination

The first paragraph is deleted and replaced with the following:

If the Authority determines that a Bidder is “Not Qualified”, the Authority or its representative will notify the Bidder in writing of its determination. The notice will set forth the specific reasons therefore to the extent practical. Such reasons may include the following:

N. Bidder has previously performed Work for the State or for the Authority in an unsatisfactory manner;

O. Bidder does not have the capacity to perform the required Work in the opinion of the Authority;

P. This Project combined with other projects committed to by the Bidder puts him in excess of his capacity in the opinion of the Authority;

Q. Reasonable grounds for believing that the Bidder is interested in more than one Proposal for the Work contemplated;

R. Developments arise which, in the opinion of the Authority, adversely affect the Bidder's responsibility; and/or,

S. Lack of qualifications as determined by the Authority.

The Maine Turnpike Authority Board or Executive Director must approve the Award of a Contract. Once approved, the Contractor will be provided with a "Notice of Award". See Subsection 103.4.

103.3.3 Appeal

"Commissioner" is replaced with "Chief Operations Officer".

The third and fourth paragraphs are deleted and replaced with the following:

Within 14 Days of Receipt of such information and arguments, the Chief Operations Officer will notify the Bidder in writing as to whether the decision of "Not Qualified" is upheld, modified, or reversed. The Chief Operations Officer's decision is final.

After a final determination of "Not Qualified" the Bidder's Bid Guaranty will be returned and the Bidder will be ineligible to bid on future MTA Contracts until the Bidder has been determined "Qualified" by the Maine Turnpike.

103.4 Notice of Award

This Subsection is deleted and replaced with the following:

Within five (5) days of the Maine Turnpike Authority Board or Executive Director approval of a Contract Award, the Authority will transmit to the successful Bidder a Notice of Award along with the Contract Documents for execution by the Contractor. The Authority has the option of notifying the successful low Bidder that the above noted material is available at the Authority for the Contractor to pick-up. The Contractor has 20 days following the Bid Opening to deliver to the Authority the signed Contract Documents, required bonds, insurance certificates, and other required information from the successful Bidder. Once these Documents are submitted to the Authority, the Authority will execute the Contract. If the Authority does not execute the Contract within 30 days of receipt of all the proper requested information, the successful Bidder may withdraw their bid without forfeiture of its Bid Guaranty or bidding eligibility. If the Authority and the successful Bidder agree in writing, an extension may be allowed.

103.5.4 Execution of Contract by Bidder

The first sentence is deleted and replaced with the following:

The properly completed and signed Contract Agreement form provided in the Contract Documents constitutes the Bidder's offer.

103.8 Execution of Contract by Department

This Subsection is deleted and replaced with the following:

The Contract will be awarded or Proposals rejected within twenty (20) days from the date of Proposal openings, except that by mutual written agreement between the Bidders and the Authority, the award may be withheld for any length of time. Any Bidder not agreeing to extend the award date shall be eliminated from the Bid List without prejudice, and their Bid Bond released.

The Contract shall not be binding until the Contract has been executed by the Authority, nor shall any Work be performed on account of the proposed Contract until the Contract has been fully executed and delivered.

SECTION 104 - GENERAL RIGHTS AND RESPONSIBILITIES

104.2.1 Furnishing of Right-of-Way

The first sentence is deleted and replaced with the following:

The Maine Turnpike Authority will secure all necessary rights to real property within the Project Limits shown on the Plans.

104.2.3 Authority of Project Manager and Resident

The following sentences are added:

The Resident is not responsible for supervising the construction Work and is not responsible for monitoring jobsite safety.

The Resident is not authorized to increase the obligation of the Authority to the Contractor, except as specifically set forth in the Specifications.

104.3.5 Duties Regarding Inspection of Work

The following paragraphs are added at the end of Paragraph A. Safe Access:

The Contractor shall furnish the Resident with every reasonable facility for ascertaining whether or not the Work is performed and the materials are furnished in accordance with the requirements and intent of the Contract. Such inspection may include mill, plant or shop inspection. If at any time before acceptance of the Work, the Resident requests it in writing, the Contractor shall remove or uncover such portion of the finished Work as directed. After examination, the Contractor shall restore said portions of the Work to the standards required by the Specifications. Should the Work exposed or examined meet the requirements of the Plans and Specifications, the uncovering or removing and the restoration of the uncovered Work shall be paid for as Extra Work except that no such payment will be made in those cases for which such removal is required by the Plans and Specifications as a part of the Work under the Project. Should the Work not meet the requirements of the Plans and Specifications, the uncovering or removing and restoration shall be at the Contractor's own expense. Any Work done or materials used without suitable supervision or inspection may be ordered to be removed and replaced by the Contractor without extra compensation.

No Work shall be done at night, on weekends, or legal holidays, without prior notice and approval of the Resident. No night Work shall be done until the Contractor has provided an adequate and sufficient source of artificial light to permit examination by the Resident of the suitability of the materials being used and the quality and character of the workmanship.

104.3.7 Laws to be Observed

This Subsection is amended by the addition of the following:

Any section of roadway open to the traveling public is a public way and subject to the applicable rules, regulations, and laws.

104.3.8 Wage Rates and Labor Laws

This Subsection is amended as follows:

A. Federal Wage Rates and Labor Laws is deleted and not replaced.

B. State Wage Rates and Labor Laws.

This Subsection is amended by the addition of the following:

This Contract is governed by the Prevailing Wage Provisions in Title 26, Chapter 15 of the Maine Revised Statutes Annotated. State Wage Rates, if applicable to the Contract, will be included in the Special Provisions.

Fair Minimum Wages

The hourly wage rate paid to laborers of the General Contractor and all Subcontractors shall not be less than the prevailing hourly rate of wages for Work of similar character in the State of Maine. The fair minimum hourly rates determined by the State of Maine Department of Labor for this Contract are included as part of this Contract.

A copy of the Wage Determination(s) shall be provided by the Contractor to all Subcontractors on the Project. In addition, the Wage Determination(s) must be kept posted at the Work site by the Contractor and by all Subcontractors at a prominent location, easily accessible by the workers. On a Project where there is no such location, a Contractor may comply with this requirement by providing each worker with a copy of the Wage Determination(s) within the first full day that the worker works on that Project. The Contractor must be able to document that each worker has received a copy of the Wage Determination(s).

Records

The Contractor and all Subcontractors shall keep an accurate record noting:

- The name and occupation of each and all laborers, workmen, and mechanics employed by them, and all independent Contractors working under Contract to them in connection to the Project;
- Number of hours worked;
- Title of the job;
- Hourly rate or other method of remuneration for the job; and,
- Actual wages or other compensation paid to each of the laborers, workmen, mechanics, and independent Contractors.

A copy of this record must be kept at the jobsite and shall be available at all reasonable hours to the inspection of the Bureau of Labor and/or the Maine Turnpike Authority, its officers and agents. These records must be preserved for a minimum of three (3) years after the completion of the Contract.

A copy of each record must be filed monthly with the Maine Turnpike Authority. This information shall be sent directly to the Maine Turnpike Authority, Director of Engineering and Building Maintenance, Attention: Wage Rate Records, 2360 Congress Street, Portland, ME 04102. The records shall note the Maine Turnpike Contract Number.

The Contractor and all Subcontractors are subject to penalties described in Title 26, Chapter 15 of the Maine Revised Statutes Annotated, for any violations of the Fair Minimum Wage Rates Policy for the State of Maine.

104.3.11 Responsibility for Property of Others

This Subsection is amended by the addition of the following:

The Contractor shall respond to all damage claims in writing, within 30 days, to the party making a damage claim. The response shall state that the Contractor accepts responsibility for the damage or outlines the reasons why the claim has been denied. If the Contractor has turned the claim over to their insurance agent or carrier, the name of the agent or carrier, along with the contact person, address and telephone information shall be included in the response to the claimant and a copy to the Authority. A standard form letter denying the claim without an explanation of the situation shall be unacceptable. A copy of the response letter shall be submitted to the Authority within the 30 day response time. The Authority shall review the response letter and will determine if the Contractor has replied in a responsive manner. If the Authority does not receive a response letter or action report from the Contractor within the 30 day response time, the Authority will determine if the Contractor is responsible for the claimed damage. If, in the absence of the Contractor's response or action report, the Authority deems the claim to be valid, the Authority will at its option pay the damage claim and deduct the amount of the claim from the Contractor. The Contractor will not be entitled to recoup these funds if their response was not transmitted within the 30 day response time. The Authority will not intervene in any claim actions where the Contractor's insurance carrier is conducting a valid, ongoing claim investigation.

104.3.14 Interpretation and Interpolation

The first sentence is change from "...and Geotechnical Information." to "...Environmental Information, and Geotechnical Information".

104.4.2 Preconstruction Conference

The following Matrix is added:

Project Decision Matrix

A Project "communication decision tree" will be developed mutually by the Authority and the Contractor during either the preconstruction meeting or partnering session. This Decision Matrix will clearly define, by descriptive job title and name, the respective counterparts for the Authority, and the Contractor who will be responsible for resolving issues at their respective levels of communication. Each level of communicators will be assigned a dollar magnitude of authority and a designated period of time within which all disputed issues must either be resolved or referred to the next higher level of communicators. The purpose of this Decision Matrix is to accelerate the resolution of decisions, to promote resolution at the lowest possible level, and to reduce the number of issues that become disputes.

The following is a sample of the Decision Matrix:

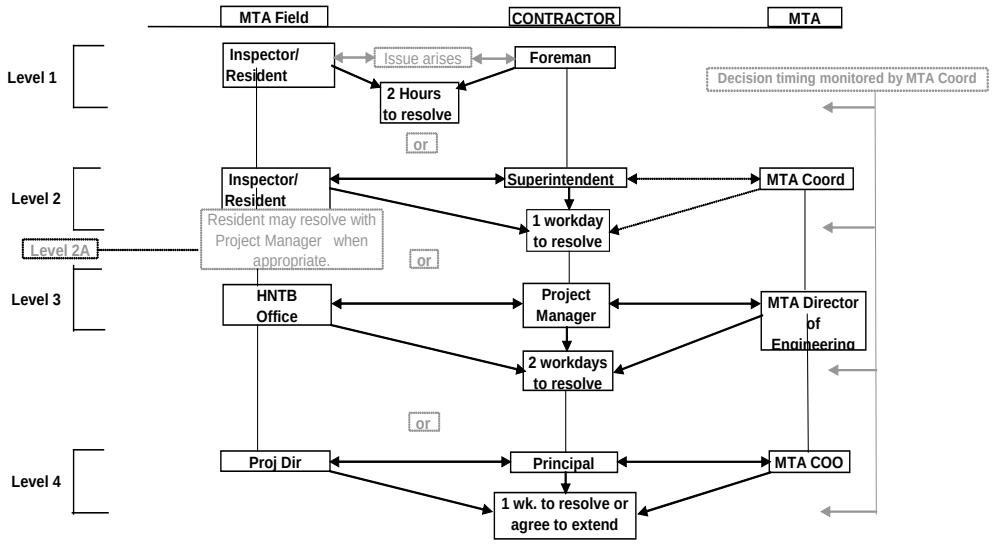

Level 5 **If an issue is not resolved at Level 4, the matter becomes a Dispute. Refer to Section 111**

Notes:

1) **Each project will enter names in all title boxes at Preconstruction or Partnering sessions.**
2) **Substitute names will be provided for all key decision levels.**
3) **Each decision level will be empowered with a maximum dollar guidance value.**
4) **Issues will automatically bounce up to next level if decision time limits are surpassed.**

104.4.5 Early Negotiation

The second paragraph in Part A is deleted and replaced with the following:

Such notice may not be verbal. Notice shall be in the form of a written memo with signatures representing both the Owner and Contractor or shall be in the form of meeting minutes within 14 days of the date that the issue became known. Meeting minutes shall not be valid documentation until they are accepted by the Resident and the Contractor.

Paragraph C, Additional Consideration, is deleted and not replaced. See related Subsection 104.4.2.

104.4.7 Cooperation With Other Contractors

This Subsection is amended by the addition of the following:

The Contractor shall cooperate with the Maine Turnpike Authority. The Authority reserves the right to conduct maintenance operations and to erect and remove traffic control devices as deemed necessary by the Authority or the Resident within or adjacent to the Project.

The Contractor shall note that other contracts may be awarded for Work adjacent to this Contract and these shall be considered adjacent contracts. The Contractor shall cooperate with other Contractors and the Resident so that all Work can be completed in a safe and timely manner. The Resident may direct the Contractor to revise the Work or schedule based on Work that is ongoing in the adjacent Contract. The Contractor's Superintendent or Project Manager shall attend coordination meetings with the Resident and the adjacent Contractors at least once every two weeks. All Contractors bear the full responsibility of cooperation and coordination with each other in the planning and scheduling of traffic closures, stoppages, and other construction activity. The Resident's responsibility for coordination is limited to the timely dissemination of all schedules and information submitted by adjacent Contractors. Neither the Resident, nor the Maine Turnpike Authority, shall bear any responsibility for costs resulting from a Contractor's failure to submit all information as required. Issues and concerns not presented for review and discussion at joint Contractor meetings will not later be cause for claims. This cooperation shall be completed at no additional cost to the Authority.

The Contractor working on an adjacent section may require the placement of temporary construction signs and traffic control devices within this Project area. The placement and maintenance of these devices by another Contractor shall be allowed in this Contract at no additional cost to the Authority.

104.4.10 Coordination of Bridge Closure/Bridge Width Restriction Notification

This Subsection is deleted and replaced with the following:

The Contractor shall notify the Authority a minimum of two (2) weeks prior to the date of closure/restriction with the date on which the closure/restriction will begin and the anticipated duration of the closure/restriction. The Authority will be responsible for notification to others.

104.5.9 Landscape Subcontractors

This Subsection is deleted and replaced with the following:

The Contractor shall retain only Landscape Subcontractors that are certified by the Maine Department of Transportation Environmental Office Landscape Unit.

SECTION 105 – GENERAL SCOPE OF WORK

Scope of Section

The second paragraph is deleted and replaced with the following:

This Contract is not federally funded.

105.1 Intent of the Contract

This Subsection is amended by the addition of the following:

The Plans and Specifications complement and supplement each other. Should any Work be required, which is not denoted on the Plans or in the Specifications because of an omission, but which is nevertheless necessary for the proper performance and completion of the Project, such Work shall be fully performed as if it were described and delineated. Should any misunderstanding arise as to the intent or meaning of said Plans and Specifications, refer to Subsection 104.4.4, Requests for Information.

The silence of the Specifications, Plans, or other supplemental documents as to any detail, or the apparent omission from them of a detailed description concerning any point, shall be regarded as meaning that only material and workmanship of excellent quality are to be used.

105.2.3 Joint Duty Regarding Safety

The first sentence is amended as follows:

The “Contractor’s TCP” is deleted and replaced with “Traffic Control Plan”.

This Subsection is amended by the addition of the following:

Nothing in the foregoing paragraphs shall be construed as relieving the Contractor from full responsibility for safe prosecution of the Work at all times. The Resident is not responsible for jobsite safety.

The following Subsection is added:

105.2.4.1 Lockout/Tagout Procedures

Prior to the start of Work, the Contractor and the Maine Turnpike Authority shall exchange and review the other party's Lockout/Tagout Procedures for the control of hazardous energy. If the Lockout/Tagout Procedures are similar and neither party has concerns, the two parties shall agree to abide by the procedures of the other party. Only the authorized individual who locked or tagged-out a circuit or piece of equipment is permitted to remove the lockout/tagout, except as provided for in the respective Lockout/Tagout Procedures.

Should either the Contractor or the Maine Turnpike Authority have concerns with the other party's Lockout/Tagout Procedures, the Safety Officers of the Contractor and the Maine Turnpike Authority shall meet, discuss and resolve the areas of concern. The Authority reserves the right to have the Contractor comply with the restrictions and prohibitions of the Maine Turnpike Authority's Lockout/Tagout Procedures if the Authority determines the Contractor's Lockout/Tagout Procedures are inadequate to protect the Authority's employees and patrons.

105.4.1 Maintenance During Construction

This Subsection is amended by the addition of the following:

Paved Surface - The Contractor is responsible for maintaining the existing paved shoulder, ramps, and travel lanes on the Maine Turnpike in good condition. The presence of tracked-dirt on the paved surfaces is unacceptable. The Resident shall have the sole authority to determine the acceptability of the paved surfaces. The use of stabilized construction entrances and frequent sweeping of the shoulder are the responsibility of the Contractor and shall be completed at no additional costs to the Authority.

Gravel Surface - The Contractor is responsible for maintaining gravel surfaces that are used for traffic in good condition. Potholes and wheel ruts are unacceptable. The Resident shall have the sole authority to determine the acceptability of the surfaces. Repairing the surfaces are the responsibility of the Contractor and shall be completed at no additional costs to the Authority.

Signs and Delineators - The Contractor is responsible for maintaining all mile markers, delineator, and signs including regulatory, warning, and guide signs during construction. Maintenance of signs shall mean that signs are clearly visible to motorists at the required height during construction. These items shall be kept in their existing location as long as is practicable. At no time shall any signs not be visible to the

driver. Construction material or equipment shall not obscure signs. This Work shall be accomplished at no additional cost to the Authority.

Erosion and Sedimentation Control - The Contractor shall plan their operations to protect existing Work from erosion. The Contractor is responsible for the inspection and maintenance of all erosion and sedimentation control devices until final acceptance. No payment will be made to repair failed areas if the Best Management Practices had not been utilized prior to a weather event.

105.4.3 Maintenance During Winter Construction

This Subsection is amended by the addition of the following:

The Maine Turnpike Authority will be responsible for winter maintenance including snow removal and application of salt on Maine Turnpike pavement open to traffic.

105.5.1 General Requirements

This Subsection is amended by the addition of the following:

Toll Free Passage on the Turnpike

The Contractor shall be granted free use of the turnpike for movement of vehicles, labor and equipment and for delivery of material essential to the Work. The Contractor will be issued cards with the Contract Number and Contractor Name while working on the Project. The cards shall be transferable and distributed by the Contractor to employees and vehicles working on the Project. The cards may only be used while working on the Project designated on the cards. Such free use shall be limited to the portion of the turnpike between the site of the Work and the nearest practicable exit including movement of vehicles, labor, equipment and materials from one site to another Work site. All vehicles must stop at a manned lane at the toll plazas to present the cards to the toll attendant. Vehicles without the required cards shall pay the required toll. This shall not be a reimbursable expense. The Contractor shall advise the Resident of the number of cards that are required. All cards shall be returned to the Resident at the completion of the Project. The use of the cards for toll free travel shall be revoked if the cards are misused. The Contractor shall nevertheless comply with regulations of the Authority relating to use of the turnpike and with established controls for non-revenue vehicles.

Existing Access

All existing access from local roads to the Maine Turnpike shall remain passable to emergency vehicles at all time. At no time shall construction equipment or material block these roads. Any misuse of this privilege will result in the Contractor's loss of access through these gates. The Contractor shall provide a lock and a piece of chain to link to the existing padlock on the gate allowing access to the Contractor and emergency vehicles.

Access From Local Roads

The Contractor shall not impact wetlands or streams to construct access to the Project. The Contractor may construct temporary access to the turnpike to facilitate the Project. Any damage caused to private property or local roads as a result of the access shall be repaired at the Contractor's own expense. The Contractor shall prepare a written plan outlining the proposed access.

At a minimum, the plan shall outline the following:

- Estimated number of vehicles;

- Time and duration of operation;
- Types of vehicles to use the access;
- Plans to construct a stabilized construction entrance;
- Plan to keep the local road free of tracked-mud and dust;
- Plan to control access to prevent unauthorized use;
- Restoration plan; and,
- Written permission from private property owners (if required).

The Contractor is required to retain the services of qualified flaggers to control the Contractor's operation at the local road access. Flaggers shall be present whenever construction vehicles are utilizing the access. The Contractor shall be responsible for constructing a gate across the access point to prohibit unauthorized access. The Contractor shall also construct a stabilized construction entrance in accordance with the MaineDOT Best Management Practices. All cost associated with the access including, but not necessarily limited to, the construction, restoration, flaggers, gate, and stabilized construction entrance shall be the responsibility of the Contractor. Failure to utilize flaggers will result in termination of permission to use local roads for access. Failure to keep local roads clear of tracked-mud will result in termination of permission to use local roads for access.

Construction Access

The Contractor shall construct a stabilized construction entrance in accordance with the Best Management Practices at all locations where construction vehicles will exit the mainline and/or enter the existing paved shoulder from a non-paved area. The Resident shall approve of the locations. The stabilized construction entrance shall be constructed in conjunction with the clearing activities or other early activities. Additional stabilized construction entrances may be required due to the Contractor's operations as well as site conditions. The construction and maintenance of the stabilized construction entrance shall be incidental.

Change of Direction

The Contractor will not be permitted to reverse directions (U-turns) at the toll plazas or at interchanges. All vehicles must exit the turnpike prior to reversing directions.

The Contractor shall not use the median openings on the turnpike unless the opening is located within passing lane closures on both roadways. The Contractor will be assessed a fine every time any employee of the Contractor, Subcontractor or supplier is observed using a median opening by a Resident or turnpike employee anywhere on the Maine Turnpike throughout the duration of the Contract. The fine will be deducted from monies owed to the Contractor.

The fines will be levied on a per occurrence basis as follows:

NUMBER OF OCCURRENCES	FINE
First	$100

For the second occurrence, and any occurrence thereafter, the fine is increased by $100 per each occurrence. The number of occurrences is not specific to a Contract, an individual or a vehicle, but based solely on the number of times any employee of the Contractor, Subcontractor or supplier is observed using a median opening anywhere on the Maine Turnpike. The Contractor shall be notified in writing of the violation by the Authority.

105.6 Construction Surveying

This Subsection is deleted in its entirety and replaced with the following:

105.6.1 Authority Provided Services

The Authority will provide the Contractor with the description and coordinates of vertical and horizontal control points, set by the Authority, within the Project Limits, for full construction Projects and other Projects where survey control is necessary. For Projects of 1,500 feet in length, or less: The Authority will provide three points. For Projects between 1,500 and 5,000 feet in length: The Authority will provide one set of two points at each end of the Project. For Projects in excess of 5,000 feet in length: The Authority will provide one set of two points at each end of the Project, plus one additional set of two points for each mile of Project length. For non-full construction Projects and other Projects where survey control is not necessary, the Authority will not set any control points and, therefore, will not provide description and coordinates of any control points: Upon request of the Contractor, the Authority will provide the Authority's survey data management software and Survey Manual to the Contractor, or its survey Subcontractor, for the exclusive use on the Authority's Projects.

105.6.2 Contractor Provided Services

Utilizing the survey information and points provided by the Authority, described in Subsection 105.6.1, Authority Provided Services, the Contractor shall provide all additional survey layout necessary to complete the Work. This may include, but not necessarily be limited to, reestablishing all points provided by the Authority, establishing additional control points, running axis lines, providing layout and maintenance of all other lines, grades, or points, and survey quality control to ensure conformance with the Contract. The Contractor is also responsible for providing construction centerline, or close reference points, for all utility facility relocations and adjustments as necessary to complete the Work. When the Work is to connect with existing structures, the Contractor shall verify all dimensions before proceeding with the Work. The Contractor shall employ or retain competent engineering and/or surveying personnel to fulfill these responsibilities.

The Contractor must notify the Authority of any errors or inconsistencies regarding the data and layout provided by the Authority as provided by Subsection 104.3.3, Duty to Notify Department If Ambiguities Discovered.

105.6.2.1 Quality Control

The Contractor is responsible for all construction survey quality control. Construction survey quality control is generally defined as, first, performing initial field survey layout of the Work and, second, performing an independent check of the initial layout using independent survey data to assure the accuracy of the initial layout; additional iterations or checks may be required if significant discrepancies are discovered in this process. Construction survey layout quality control also requires written documentation of the layout process such that the process can be followed and repeated, if necessary, by an independent survey crew.

105.6.3 Quality Assurance

It is the Authority's prerogative to perform construction survey quality assurance. Construction survey quality assurance may or may not be performed by the Authority. Construction survey quality assurance is generally defined as an independent check of the construction survey quality control. The construction survey quality assurance process may involve physically checking the Contractor's construction survey layout using independent survey data, or may simply involve reviewing the construction survey quality control written documentation. If the Authority elects to physically check the

Contractor's survey layout, the Contractor's designated surveyor may be required to be present. The Authority will provide a minimum notice of 48-hours to the Contractor, whenever possible, if the Contractor's designated surveyor's presence is required. Any errors discovered through the quality assurance process shall be corrected by the Contractor, at no additional cost to the Authority.

105.6.4 Boundary Markers

The Contractor shall preserve and protect from damage all monuments or other points that mark the boundaries of the right-of-way or abutting parcels that are outside the area that must be disturbed in order to perform the Work. The Contractor indemnifies and holds harmless the Authority from all claims to reestablish the former location of all such monuments or points including claims arising from 14 MRSA § 7554-A. For a related provision, see Subsection 104.3.11, Responsibility for Property of Others.

105.7.1 General

The following paragraphs are added:

Within ten (10) days after the date of execution of the Contract, the Contractor shall inform the Resident in writing of the sources from which he proposes to obtain the materials required for the Project and statements of quality of these materials as hereinafter required in Subsection 106.01, Roles Regarding Quality. Information or materials not required to be incorporated in the Work within six (6) months after said date of execution, may be furnished within thirty (30) days.

Prior to the approval of the submittal, any Work done or materials ordered shall be at the Contractor's own risk. All submittals shall be stamped and signed by the Contractor verifying their approval of the Shop Drawings.

Prior to forwarding submittals to the Resident for review and approval, the Contractor shall mark the Item Number on each submittal for identification, thoroughly check the submittals for compliance with the Contract Documents, and place its stamp of approval on each sheet certifying that the Contractor has so checked each submittal. The Contractor shall certify that "This Shop Drawing has been thoroughly checked and complies with the Contract Documents and field measurements and the item fits with adjoining Work except as noted". Submittals which do not contain this stamp of approval and certification, or which are incomplete, have not been checked, have been checked only superficially, or contain numerous errors, will be returned un-reviewed by the Resident for resubmission by the Contractor. Delays in obtaining approvals, other than those caused by the Authority, are not grounds for granting an extension of time. Disclaimers by the Contractor, any Subcontractor, or supplier of responsibility for any requirements of the Contract Documents, will not be accepted by the Authority and will be deemed invalid.

The following submissions are required if applicable to the Work:

- Construction plans for access
- Project master schedule
- Updated schedules as required
- Shop Drawings
- Spill Prevention Control and Countermeasure (SPCC) Plan
- Traffic control plans
- Temporary earth support system submission
- Bridge beam or structural steel erection plan

105.7.4 Submittal Requirements

The second paragraph is deleted and replaced with the following:

For the first and subsequent submittals, the Contractor shall submit a minimum of seven (7) sets of drawings to the Resident on the size sheets required unless otherwise directed by the Resident.

105.8.1 Temporary Soil Erosion and Water Pollution Control

This Subsection is amended by the addition of the following:

Spill Prevention Control and Countermeasure (SPCC) Plan

Any areas where petroleum products, oils or hazardous materials are handled or stored will require a Spill Prevention Control and Countermeasure (SPCC) Plan. The Plan will be submitted to the Resident before construction begins for review and approval. At a minimum, the Plan shall provide the following information:

1. Name of person who is responsible for spill prevention;

2. Description of handling or storage location, noting setbacks from water bodies where relevant. Significant sand and gravel aquifers and other sensitive resources must be avoided wherever possible;

3. Description of storage and containment facilities;

4. Description of equipment and/or materials used to prevent discharges (including sorbent materials);

5. Preventative measures to minimize the possibility of a spill; and,

6. Contingency plan if spill should occur.

The approved plan must be posted at the jobsite. All personnel working in the area are required to read and be familiar with the plan.

There shall be no separate payment for preparation of a SPCC Plan acceptable to the Resident and preparation is considered incidental to the Work.

ENVIRONMENTAL STANDARDS

The Project will be performed in accordance with the MaineDOT Best Management Practices (BMP) latest issue. The Contractor shall fully comply with all erosion and sedimentation control requirements outlined in the BMP's or contained herein. Non-compliance with these requirements as determined by the Resident shall result in a financial penalty of $1,000 per day, per violation. Any fines assessed to the Maine Turnpike Authority as a result of the Contractor's non-compliance shall be paid by the Contractor. If the Contractor fails to pay, the cost of the fine will be deducted from monies due, or which may become due to the Contractor under this Contract.

In the event of conflict between these Specifications and other erosion and pollution control laws, rules or regulations of other Federal, State and local agencies, the more restrictive law, rules or regulations shall apply.

The standards as described below shall be met on the Project:

1. Temporary erosion control measures shall be maintained until the site is permanently stabilized with vegetation or other permanent control measures.

2. The Contractor will immediately take appropriate measures to prevent erosion or sedimentation from occurring or to correct any existing problems regardless of the time of year.

3. Work in wetlands is prohibited except to the minimum extent necessary for completion of the Work as detailed on the Plans. Excavated and other material shall not be stockpiled in wetlands. Haybales, silt fence or other suitable barriers shall be used, where necessary, to prevent sedimentation from eroding materials.

4. Uncured concrete shall not be placed directly into the water body. Concrete may be placed in forms and shall cure at least one (1) week prior to form removal. No washing of tools, forms, etc. shall occur in or adjacent to the water body or wetland. Any additional requirements are outlined in Subsection 107.261 of the Special Provisions.

5. Disturbance of natural resources beyond the construction limits shown on the Plans is not allowed.

6. Bare earth slopes shall be roughened to dissipate sheet flow. This shall be accomplished by "tracking" the slope perpendicular to the centerline. No bare earth shall be maintained for more than five days without surface roughening. This Work will not be measured separately for payment, but shall be incidental to the Excavation item.

7. No wheeled or tracked equipment shall be operated in the water. Equipment operating on the shore may reach into the water with a bucket or similar extension. Equipment may NOT cross streams.

8. Existing ditches shall be maintained until the new ditches are stabilized. Stone check dams shall be placed in existing ditches prior to construction as to prevent the release of sedimentation. Stone check dams shall be installed at the outlets of all existing and proposed ditches adjacent to all stream and wetlands.

9. The Contractor's operation may require the placement of temporary pipes and fill over a ditch line to provide access to the Work area. The Resident shall approve the size of the pipe. The placement and removal of the temporary access will not be measured separately for payment, but shall be incidental to the Excavation item.

105.10 Equal Opportunity and Civil Rights

105.10.1 Requirements Applicable to Federally Funded Contracts

This Subsection is deleted and not replaced.

105.10.2 Requirements Applicable to All Contracts

The following is added after Paragraph (A), Maine Code of Fair Practice and Affirmative Action, Paragraph 4).

The Maine Turnpike Authority is an equal opportunity employer and as such, requires all Contractors to pursue in good faith affirmative action programs.

THEREFORE;

The Contractor hereby agrees to the following requirements:

1. The Contractor will pursue an affirmative action program which includes procedures designed to increase the numbers of minorities, women, and handicapped at all levels and in all segments of the workforce where imbalances exist. Such a program should include an assessment of the existing situation, and the development of realistic goals for necessary actions. These goals and related procedures and timetables should not require rigid quotas but are commitments which the Contractor should make every good faith effort to achieve.

2. In connection with Contracts in excess of $250,000, the Contractor will insure contractually that all Subcontractors shall also pursue an affirmative action program meeting the above requirements. The Contractor shall also ensure contractually that all Subcontractors with Contracts in excess of $50,000 pursue an affirmative action program meeting the above requirements.

3. An affirmative action program will provide that no Contractor and/or Subcontractor will discriminate against an employee or applicant for employment because of race, color, religious creed, sex, national origin, ancestry, age, physical handicap or mental handicap unless based upon a bona fide occupational qualification. Such action shall include, but not necessarily be limited to, the following; employment, upgrading, demotions, transfers, recruitment or recruitment advertising, layoffs or terminations, rates of pay and compensation, and selection for training and apprenticeship.

Paragraph (D), Prevention of Sexual Harassment, is deleted and replaced with the following:

Contractors are responsible, under Maine State Law, for ensuring and maintaining a Work environment that is free from sexual harassment. The Contractor shall comply with all relevant provisions of Maine State Law in regard to sexual harassment including, but not necessarily limited to, 5 MRSA 4572, 26 MRSA 806-807, and the regulations of the Maine Human Rights Commission.

Subsections 105.10.2 (E), DBE Reporting Requirements, and (F), Certification of Continuing EEO Efforts, are deleted and not replaced.

105.11 Other Federal Requirements

This Subsection is deleted in its entirety and not replaced.

The following Subsection is added:

105.12 Limitations of Operations

The Contractor shall keep the existing shoulder clear of construction activity except for the period of shoulder reconstruction. The Contractor shall not park or store construction equipment, vehicles, or materials on the shoulder. Construction vehicles shall not enter the mainline travel lane until they can safely merge with the traffic in the travel lane. The construction access shall be in accordance with the details in the Plans. The Resident must approve all shoulder closures.

Existing drainage shall be maintained at all times. All ditches that discharge into wetlands shall have a series of stone check dams installed in the ditch near the outlet prior to the commencement of clearing activities in the area.

SECTION 106 – QUALITY

106.3.3 Sources

Paragraph A, General, is amended by the addition of the following:

Preference in the purchase of supplies and materials, other considerations being equal, shall be given in favor first of supplies and materials manufactured and sold within the State of Maine, and second, of supplies and materials manufactured within the United States. Materials and supplies sold outside the United States will be considered third in the preference order.

106.3.4 Storage

This Subsection is amended by the addition of the following:

The Contractor shall be responsible for the security of all storage areas. Materials and supplies that are stolen, damaged or otherwise made unacceptable while in storage shall be replaced in kind at the Contractor's own expense.

106.3.7 Sampling and Testing

The forth paragraph is deleted in its entirety and not replaced.

106.6 Acceptance

All paragraphs after the first paragraph are deleted and not replaced.

106.8.3 Unauthorized Work

The following paragraphs are added:

No omission or failure on the part of the Resident to disapprove or reject any Work or material shall be taken to be an acceptance of any defective Work or material. Within the time set by the Resident, the Contractor shall remove any Work or material condemned by the Resident and shall rebuild and replace the same without extra compensation and in default thereof the removal and replacement may be done by the Authority at the expense of the Contractor; or, in case the Resident should not consider the defect of sufficient importance to require the Contractor to rebuild or replace any imperfect Work or material, he shall have power, and is hereby authorized, to make an equitable deduction from the Contract price.

Materials which do not conform to the requirements of these Specifications shall be considered as defective and will be rejected, whether in place or not, and shall be removed from the Project. No material which has been rejected, the defects of which have been corrected or removed, shall be used until approved by the Resident in writing.

SECTION 107 – TIME

The following Subsection is added:

107.1.1 Substantial Completion

An 80 percent reduction of retainage will be considered by the Authority when the Project is substantially complete. The Contractor shall include an explanation of the outstanding Work, an estimate of the cost to complete the Work, and a schedule for completing the Work. Seasonal limitations as well as warranty and establishment periods (for vegetation) shall be addressed.

107.3.1 General

This Subsection is amended as follows:

See related Subsection 101.2, Definitions: Holidays.

Work that impacts traffic may be subjected to further restrictions. See related Special Provision Section 652.

107.3.2 Night Work

This Subsection is amended by the addition of the following:

- The Maine Turnpike encourages the Contractor to construct the Project cost effectively while maintaining quality and conformance with all Federal, State and local laws. To facilitate this process, the Maine Turnpike recognizes that the Contractor may choose to construct portions of the Project at night.
- The following is a partial list of activities that would be favorably considered for night construction. The final determination of applicability by the Authority will be based on the Contractor's plan of operation. The Contractor shall demonstrate that the Work can be accomplished in conformance with the appropriate regulations.

Highway Related Work

- Installation and removal of traffic control devices (drums, concrete barrier, impact attenuators)
- Installation and removal of painted pavement markings
- Placement of pavement
- Sawcutting of pavement
- Installation and removal of guardrail

Bridge Related Work

- Delivery of materials (except oversize loads)
- Placement and removal of pier forms
- Shielding of old and new bridge
- Installation and removal of deck and diaphragm forms
- Installation and removal of overhang brackets
- Field painting and preparation of damaged paint areas
- Application of penetrating sealers
- Installation of sign panels on sign bridges

107.3.3 Sundays and Holidays

This Subsection is amended by the addition of the following:

"Saturday" is added before Sunday.

Requests to work outside of the allowable periods must be submitted in writing and approved by the Resident prior to the start of Work. Approval for Work, that in the Authority's opinion will not significantly impact traffic flow, will not be unreasonably withheld.

107.4.2 Schedule of Work Required

This Subsection is amended by the addition of the following:

No Pay Requisition will be approved for payment until the schedule requirement is fulfilled and accepted by the Maine Turnpike Authority.

In addition to the Schedule required hereinbefore, the Contractor shall submit, no later than 12:00-noon every Thursday, a detailed plan of his operations for the following week. This plan shall show the type of Work to be done and the traffic lanes that are to be impacted. This updated plan will be used by the Resident to schedule the appropriate resources and inform other interested parties of the proposed Work.

107.4.4 Schedule Revisions

This Subsection is amended by the addition of the following:

The progress of Work shall be compared against the Schedule of Work at a job meeting once every month. If the Authority determines that the Contractor's actual progress is not in substantial conformity with the Schedule of Work, then the Contractor shall submit a revised Schedule of Work to the Authority depicting the increased or decreased variations in activity durations and milestones as compared to previously submitted schedule(s). If noted in the meeting minutes, or directed in writing by the Resident, the Contractor shall submit a revised Schedule to the Authority within one week of the request. If a revised realistic Schedule is not received within one week of the request, the monthly pay requisition will be withheld. Failure to modify completion dates without a commitment to modify Project resources shall be deemed an unrealistic Schedule unless the particular activity had adequate float.

107.7.2 Schedule of Liquidated Damages

The table of liquidated damages is deleted and replaced with the following:

Original Contract Amount From More Than	Original Contract Amount up to and Including	Amount of Liquidated Damages per Calendar Day
$0	$100,000	$100
$100,000	$300,000	$200
$300,000	$500,000	$400
$500,000	$1,000,000	$575
$1,000,000	$2,000,000	$750
$2,000,000	$4,000,000	$900
$4,000,000	and more	$1,875

This Subsection is amended by the addition of the following:

At the option of the Authority, the Contractor may be held responsible for all costs incurred by the Authority which are due to any Work that remains incomplete after the time specified for the completion of the Contract, in addition to the daily calendar day charge.

107.9.1 Final Clean-up and Finishing

This Subsection is amended by the addition of the following:

No separate payment will be made for final clean-up and restoration of property, but the cost thereof shall be included in the prices bid for the various items scheduled in the Proposal.

SECTION 108 - PAYMENT

108.1 Measurement of Quantities for Payment

This Subsection is amended by the addition of the following:

The quantities in the Schedule of Items are the approximate totals. The breakdown of quantities for various locations is approximate and is for information only. No change in the bid price will be considered for changes in the actual quantities at each location except as provided for in Subsection 109.1, Changes in Quantities.

108.1.2 General Measurement Provisions

The first sentence is deleted and replaced with the following:

The Maine Turnpike Authority will utilize the U.S. Customary system for all units of measurement.

108.1.3 Provisions Relating to Certain Measurements

This Subsection is amended by the addition of the following:

No allowance will be made for surface laid over a greater area than indicated on the Plans or otherwise authorized, or for excavation removed or embankment placed beyond the slope lines shown on the cross-sections, except as otherwise specifically noted or authorized by the Resident in writing.

108.2.1 Generation of Progress Payment Estimates

The first paragraph is deleted and replaced with the following:

The Resident will make current estimates in writing once each month, on or before the date set by the Resident at the time of starting Work, or from time to time as the Work progresses. Progress payments twice per month will not be allowed. The estimate shall include all materials complete in place and the amount of Work performed in accordance with the Contract, during the preceding month or period and the value thereof figured at the unit prices contracted together with estimates of the cost of Extra Work performed during the same period. Estimates or payments will not be made, if in the opinion of the Resident, the Work is not proceeding in accordance with the provisions of the Contract. The Contractor agrees to waive all claims relating to the timing and amount of such estimates.

108.2.2 Payment

The first two sentences are deleted and replaced with the following:

The Maine Turnpike Authority will make payment within 30 days of Contractor and Resident concurrence of progress payment.

108.2.3 Mobilization Payments

The second paragraph is deleted and replaced with the following:

A. The first payment of 50 percent of the lump sum price for mobilization or five percent of the original Contract Amount, whichever is less, will be made with the first monthly estimate.

B. The second payment of 25 percent of the lump sum price for mobilization or 2.5 percent of the original Contract Amount, whichever is less, will be made following completion of 25 percent of the proposed Contract Amount.

C. The third payment of 25 percent of the lump sum price for mobilization or 2.5 percent of the original Contract Amount, whichever is less, will be made following completion of 50 percent of the proposed Contract Amount.

D. Upon substantial completion of the Work on the Project, as determined by the Resident, payment of any amount bid for mobilization in excess ten percent of the original Contract Amount will be paid.

All payments are subject to standard retainage.

Demobilization will not be measured separately for payment, but shall be incidental to Item 659.10, Mobilization.

108.3 Retainage

This Subsection is deleted and replaced with the following:

From the total of the amounts so ascertained there will be deducted an amount equivalent to 7.5 percent of the whole, to be retained by the Authority until after the completion of the entire Contract in an acceptable manner, and the balance, or a sum equivalent to 92.5 percent of the whole shall be certified by the Resident to the Authority for payment.

If it became evident, on the basis of approved progress schedules, or otherwise, that the completion date for the Contract will not be met, the Authority reserves the right to retain the amount of the liquidated damages which have apparently accumulated, in addition to 7.5 percent of the value of the Work done to date.

If at any time there shall be evidence of any lien or claim for which, if established, the Authority might become liable and which is chargeable to the Contractor, the Authority shall have the right to retain out of any payment, then due or thereafter to become due, an amount sufficient to completely indemnify the Authority against such lien or claim.

If the Contractor elects to furnish to the Authority a surety bond in the amount of twice the amount of all liens or claims pending against the Contractor, then the Authority will not exercise the aforementioned right to make retention out of payments on account of such liens or claims.

The payment of any current estimates or of any retained percentages shall in no way affect the obligations of the Contractor to repair or renew any defective parts of the construction and to be responsible for all damage due to such defect.

All material estimates and payments shall be subject to correction in subsequent partial estimates and payments and on the final estimate and payment.

108.4 Payment for Materials Obtained and Stored

The first paragraph is amended as follows:

In the second sentence, the words "...Delivered on or near the Work site at acceptable storage places." are deleted and not replaced.

108.4.1 Price Adjustment for Hot Mix Asphalt

This Subsection is deleted and replaced with the following:

For Contracts containing an excess of 5,000 tons of bituminous pavement, an asphalt price adjustment will be made for all bituminous concrete placed six (6) months after the bid date of the Contract. No asphalt price adjustment will be allowed for Contracts containing less than 5,000 tons. For Contracts containing more than 5,000 tons, no adjustment will be made for asphalt placed at any time within six months of the bid date.

Price adjustment will be based on the variance in cost for the performance-graded binder component of the hot mix asphalt. The quantity of hot mix asphalt for each pay item will be multiplied by performance graded binder given in the table below, times the difference in price in excess of ten percent between the base price and the period price of asphalt cement. Adjustments will be made upward or downward, as prices increase or decrease. The quantity of Hot Mix Asphalt will be determined from the quantity shown on the progress estimate for each pay period. The base price of performance graded binder to be used is the price per standard ton current with the bid opening date. The period price shall be determined by the Authority and shall be the price per standard ton current with the ending date of the progress estimate. The prices shall be determined by using the average N.E. Barge Price, FOB, as listed in the Asphalt Weekly Monitor.

Plant Mix B Pavement	4.0%
Hot Bituminous Pavement Grading B	4.5%
Hot Bituminous Pavement Grading C	5.5%
Hot Bituminous Pavement Grading D	5.5%
Hot Bituminous Pavement Grading E	5.5%

108.5 Right to Withhold Payment

This Subsection is amended by the addition of the following:

L. Contractor's failure to, or refusal to, remove within 24-hours after receipt of proper notice, any employee or person engaged in Work under Contract.

M. Contractor's failure to submit required schedule or schedule updates.

108.6 Taxes, Fees, Allowances, and Notices

This Subsection is amended by the addition of the following:

The Maine Turnpike Authority, an agency of the State of Maine, is exempt from payment of sales tax, under the present Maine Sales Tax Law, on any property purchased by it at retail for consumption. The Maine Tax Bureau has interpreted this to mean that all materials purchased by the Contractor which ultimately remain the property of the Maine Turnpike Authority, even though in a changed form, are not subject to the sales tax.

108.8 Final Payment

This Subsection is amended by the addition of the following:

Before final payment is made, the Contractor shall furnish to the Authority, on the forms prescribed (Sheet F-1), a sworn affidavit to the effect that no claims are pending. If such affidavit that claims have been paid cannot be given because of a dispute as to the amount or legality of such claim, the Contractor's affidavit shall clearly set out the facts as to the name, address, amount, and nature of the dispute. The Authority will review the matter and will make payment that the Authority deems is appropriate to the Contractor.

SECTION 109 – CHANGES

109.1.1 Changes Permitted

The following is added to the end of the paragraph:

There will be no adjustment to Contract Time due to an increase or decrease in quantities, compared to those estimated, except as addressed through Contract Modification(s).

109.1.2 Substantial Changes to Major Items

The following is added to the end of the paragraph:

Contract Time adjustments may be made for substantial changes to Major Items when the change affects the Critical Path, as determined by the Authority.

109.3 Extra Work

The following paragraphs are added:

No Extra Work shall be performed except pursuant to the written orders of the Resident, expressly and unmistakably indicating its intention to treat the Work described therein as Extra Work.

If the Contractor determines that Work directed by the Resident is Extra Work, he shall, within 48-hours, give written notice thereof to the Resident stating why he deems it to be Extra Work and shall furnish to the Resident daily time slips and memoranda for the purpose of affording to the Authority an opportunity to verify the Contractor's claim at the time and (if it desires to do so) cancel promptly such order, direction or requirement of the Resident.

Accordingly, the failure of the Contractor to serve such notice or to furnish such time slips and memoranda shall be deemed to be a conclusive and binding determination on his part that the direction,

order or requirement of the Resident does not involve the performance of Extra Work, and shall be deemed to be a waiver by the Contractor of all claims for additional compensation or damages by reason thereof.

Refer to related Subsections 104.4.2, Preconstruction Conference, and 109.7.5, Force Account Work.

109.4 Differing Site Conditions

109.4.1 Definition

This Subsection is amended by the addition of the following:

Paragraph (A) is the definition of Differing Site Conditions. Paragraphs (B), (C) and (D) are not all required along with Paragraph (A) to prove Differing Site Conditions. However, they will be considered by the Maine Turnpike Authority as part of the evaluation of Differing Site Conditions. See related Subsection 102.3, Examination of Documents, Site, and Other Information.

109.4.4 Investigation / Adjustment

This Subsection is amended as follows:

In the third sentence, delete the words "Subsections (A) - (E)".

109.5.1 Definitions - Types of Delays

This Subsection is amended as follows:

B. Compensable Delay -

Replace (1) with the following:

1(A) a weather related Uncontrollable Event of such an unusually severe nature that a Federal Emergency Disaster is declared. The Contractor will only be entitled to an Equitable Adjustment if the Project falls within the geographic boundaries prescribed under the disaster declaration.

1(B) a weather related Uncontrollable Event of such an unusually severe nature that the Contractor's critical path schedule is disrupted.

109.5.2 Entitlement to Adjustments

This Subsection is amended as follows:

A. Types of Adjustments -

Paragraph 2. is deleted and replaced with the following:

2. If a Compensable Delay 1(A), (2), or (3), the Contractor is entitled to an extension of time and an equitable adjustment as set forth in Subsection 109.7, Equitable Adjustment to Compensation. If a Compensable Delay 1(B), the Contractor is entitled to an extension of time and an equitable adjustment as set forth in Subsection 109.7, Equitable Adjustment to Compensation, except that Cost of extended jobsite overhead and time will not be allowed.

109.5.5 Documenting the Delay and Request for Adjustments

The last paragraph is deleted and replaced with the following:

The Authority may require that all cost shown in the report be certified by an accountant.

109.5.6 Decision by Program Manager

This Subsection is deleted and not replaced.

Refer to related Subsection 104.4.2, Preconstruction Conference.

109.5.7 Additional Consideration by Department

This Subsection is deleted and not replaced.

Refer to related Subsection 104.4.2, Preconstruction Conference.

109.6.1 Overview - General Requirements

This Subsection is amended by the addition of the following:

The Maine Turnpike will not participate in any costs borne by the Contractor that are not in accordance with Maine Turnpike policies. All money paid to a business or resident as compensation for impacts created by the Contractor's operation will not be reimbursed by the Authority. All Contractor costs must be documented. Monies paid by the Contractor to others must be documented by a receipt for the cost to be considered as part of the VECP. Copies of all receipts shall be submitted to the Resident.

109.7.2 Basis of Payment

This Subsection is deleted in its entirety and replaced with the following:

Equitable Adjustments will be established by mutual Agreement for compensable items listed in Subsection 109.7.3, Compensable Items, based upon Unit or Lump Sum Prices. If Agreement cannot be reached, the Contractor shall accept payment on a Force Account basis as provided in Subsection 109.7.5, Force Account Work, as full and complete compensation for all Work relating to the Equitable Adjustment.

109.7.3 Compensable Items

This Subsection is deleted and replaced with the following:

The Contractor is entitled to compensation for the following items, with respect to agreed upon Unit or Lump Sum Prices:

1. Labor expenses for non-salaried workers and salaried foremen.

2. Costs for Materials.

3. A markup on the totals of Items 1 and 2 of this Subsection (109.7.3) for home office overhead and profit of the Contractor, its Subcontractors and suppliers, and any lower tier Subcontractors or suppliers, with no mark-ups on mark-ups.

4. Cost for Equipment, based on Blue Book Rates or leased rates, as set forth in Subsection 109.7.5(C), or the Contractor's Actual Costs.

5. Costs for extended jobsite overhead.

6. Time.

7. Subcontractor quoted Work, as set forth below in Subsection 109.7.5, Force Account Work.

109.7.5 Force Account Work

This Subsection is amended by the addition of the following:

C. Equipment

When the Contractor is paid for furnishing and operating equipment on an hourly or daily basis, it shall be operated as approved by the Resident in such a manner as to obtain maximum production under the prevailing conditions. The Resident may order the removal and require replacement of any unsatisfactory equipment.

The first sentence of the second paragraph, which begins: "Equipment leased...", is deleted.

The second sentence of the sixth paragraph is changed from "The Contractor may furnish..." to read "If requested by the Authority, the Contractor will produce cost data to assist the Authority in the establishment of such rental rate, including all records that are relevant to the Actual Costs including rental Receipts, acquisition costs, financing documents, lease Agreements, and maintenance and operational cost records."

The following sentence is added:

Equipment leased by the Contractor for Force Account Work and actually used on the Project will be paid for at the actual invoice amount plus 10 percent markup for administrative costs.

The following sentence is added:

F. Subcontractor Quoted Work - When accomplishing Force Account Work that utilizes Subcontractor quoted Work, the Contractor will be allowed a maximum markup of five percent for profit and overhead.

SECTION 110 - INDEMNIFICATIONS, BONDING AND INSURANCE

110.2.1 Bonds

The first three paragraphs are deleted and replaced with the following:

The Bidder to whom the Contract is awarded shall furnish a Surety Corporation Bond, satisfactory to the Authority, on the form of the Contract Bond bound herewith, as security for the faithful performance of the Work. The Contract Bond must be executed or countersigned on the part of such Surety by the Resident Agent of the Surety for the State of Maine.

The Bond shall be in an amount not less than the Total Amount bid in the Proposal and shall be maintained by the Contractor until the final payment under the Contract is made. In the event of insolvency

of the Surety, the Contractor shall forthwith furnish and maintain as above provided, other security satisfactory to the Authority.

If the Contractor is unable to continue the Work, then the completion of the Contract shall be the sole responsibility of the Surety. The Surety shall assume the role of and become the Contractor. Work shall not commence until the Authority has approved, in writing, the Subcontractor's employed by the Surety. All Work to complete the Contract will be paid for at Contract bid prices as shown on the Proposal bid sheets. All payments made by the Authority will be paid directly to the Surety who in turn will then pay the Subcontractors and suppliers. Regardless of the amounts previously paid to the Contractor as Progress Estimates for Work reported to have been put in place by the Contractor or his Subcontractors, the full Scope of the Contract Work shall be completed by the Surety and its designates for compensation not to exceed the Contract Price less the aggregate of prior payments to the Contractor.

110.2.3 Bonding for Landscape Subcontractors

This Subsection is deleted and replaced with the following:

110.2.3 Bonding for Landscape Establishment Period

The Contractor shall provide a signed, valid, and enforceable Performance, Warranty, or Maintenance Bond complying with the Contract, to the Department at Final Acceptance.

The Bond shall be in the full amount for all Pay Items for Work pursuant to Section 621, Landscape, made payable to the Maine Turnpike Authority.

The Contractor shall pay all premiums and take all other actions necessary to keep said Bond in effect for the duration of the Landscape Establishment Period as described in Special Provision 621.0036, Establishment Period. If the Surety becomes financially insolvent, ceases to be licensed or approved to do business in the State of Maine, or stops operating in the United States, the Contractor shall file new Bonds complying with this Subsection and within 10 days of the date the Contractor is notified or becomes aware of such change.

All Bonds shall be procured from a company organized and operating in the United States, licensed or approved to do business in the State of Maine by the State of Maine Department of Business Regulation, Bureau of Insurance, and listed on the latest Federal Department of the Treasury listing for "Companies Holding Certificates of Authority as Acceptable Sureties on Federal Bonds and as Acceptable Reinsuring Companies."

By issuing a Bond, the Surety agrees to be bound by all terms of the Contract, including those related to payment, time for performance, quality, warranties, and the Department's self help remedy as provided in Subsection 112.1, Default, to the same extent as if all terms of the Contract are contained in the Bond(s).

Regarding claims related to any obligations covered by the bond, the Surety shall provide, within 60 Days of Receipt of written notice thereof, full payment of the entire claim or written notice of all bases upon which it is denying or contesting payment. Failure of the Surety to provide such notice within the 60-day period constitutes the Surety's waiver of any right to deny or contest payment and the Surety's acknowledgment that the claim is valid and undisputed.

110.3 Insurance

This Subsection is amended by the addition of the following:

Each policy shall be signed by the President and Secretary of the insurance company and shall be countersigned by a licensed Resident Agent of the State of Maine as an authorized representative of the company.

Before Work is commenced pursuant to the Agreement, the Contractor shall file with the Authority a Certificate of Insurance, executed by an insurance company or companies satisfactory to the Authority and licensed or approved by the State of Maine Department of Business Regulation, Bureau of Insurance to do business in the State of Maine, stating that the Contractor carries insurance in accordance with the requirements of the Contract.

If at any time, any of the said policies shall be or become unsatisfactory to the Authority, the Contractor shall promptly obtain new and satisfactory policies and furnish certificates therefor as required above. All policies shall contain a valid provision or endorsement providing that the insurance company will notify the Authority in writing at least thirty (30) days prior to the termination of any policy or before any changes are made in any policies. The policy shall also indicate which exclusions have been deleted and any additional coverages.

Neither approval by the Authority, nor a failure to disapprove insurance furnished by a Contractor, shall release the Contractor of full responsibility for liability, damages and accidents as set forth herein.

No separate payment shall be made for any insurance that the Contractor may be required to carry, but all costs thereof shall be included in the prices bid for the various items scheduled in the Proposal.

The following Subsection is added:

110.3.05 Umbrella Liability

An Umbrella Liability Policy in excess of Employer's Liability, General Liability, and Automobile Liability shall be provided with a limit of $4,000,000.

110.3.2 Commercial General Liability

This Subsection is amended by the addition of the following:

Where the Work to be performed has to do with railroads, then railroad Protective Liability Insurance shall be provided, with the Maine Turnpike Authority as a named insured.

The Contractual Liability Insurance shall cover the Contractor's obligation to indemnify the Authority as provided in Subsection 110.1, Indemnification.

110.3.4 Professional Liability

The first sentence is deleted and replaced with the following:

Contractors who engage in design Work, preliminary engineering Work, and environmental consulting Work for the Authority shall maintain a Professional Liability policy for errors and omissions with a minimum limit of liability of $5,000,000. The Authority reserves the right to require increased insurance limits for certain major Projects.

110.3.5 Owner's and Contractor's Protective Liability

This Subsection is deleted and replaced with the following:

For Projects with a Contract price in excess of $500,000, an "Owner's Protective" policy in the name of the Maine Turnpike Authority, with a $5,000,000 limit, shall also be provided.

110.3.6 Builder's Risk Insurance

This Subsection is amended by the addition of the following:

The Contractor shall provide Builder's Risk Insurance if the Project requires it. This determination will be made by the Authority and shall be so stated in the Special Provisions. The insurance coverage shall be shown on a special form and provide for transient and off-premise coverage and materials intended for use at the Project site. Any exclusion related to design, materials, or workmanship shall not apply to resulting damage.

110.3.8 Administrative and General Provisions

A. Additional Insured

This paragraph is deleted and replaced with the following:

Each policy, with the exception of Workers' Compensation and Professional Liability Insurance, shall name the Authority as an additional named insured. The Maine Turnpike Authority Contract Number shall be clearly stated on each policy.

SECTION 111 - RESOLUTION OF DISPUTES

111.1.2 Escalation Process

This Subsection is deleted and replaced with the following:

To resolve Issues and Disputes, the Contractor and the Maine Turnpike Authority will develop a Decision Matrix at the preconstruction or partnering meeting. See related Subsection 104.4.2, Preconstruction Conference. If an issue is not resolved, the matter becomes a Dispute and is eligible for settlement by an Alternate Dispute Resolution (ADR) process as outlined in this Section. Either the Authority or the Contractor may request an ADR process. If a Contractor is dissatisfied with an ADR recommendation, the decision may be appealed to the MTA Executive Director. A decision by the MTA Executive Director may be appealed to either Mediation or Arbitration. All costs of ADR, including Neutral Evaluations, Dispute Review Boards (DRBs), Mediation or Arbitration shall be shared equally.

ALTERNATIVE DISPUTE RESOLUTION

Preliminary ADR:

The purpose of the optional use of ADR is to assist the consenting parties to resolve disputes in a manner that complies with the Contract, that is fair, impartial, less expensive, faster and less formal than litigation. A Project issue becomes a Dispute eligible for ADR only when mutually acceptable resolution can not be achieved within the Decision Matrix-prescribed time period at the level of the Authority's Chief Operating Officer (COO), and the Contractor's Principal.

The Contractor and the Authority shall select a mutually acceptable form of Preliminary ADR from the following options, with the preference expressed in the order of listing.

1. NEUTRAL EVALUATION: Jointly selected by the disputing parties, the Neutral would conduct a third party, neutral investigation of both sides of the dispute, resulting in the submission of a Report of Recommended Settlement to the disputing parties.

2. DISPUTE REVIEW BOARD (DRB): The parties would jointly select two to three mutually acceptable experts who would hear and weigh a presentation of positions and evidence by the parties; resulting in the issuance by the DRB of a Recommended Settlement of the matter.

Recommendations by either a Neutral or a DRB will be non-binding unless the parties mutually agree in writing at the time of process selection that such recommendations will be binding.

Appeal to the Executive Director:

If either party rejects a recommendation resulting from ADR, the Dispute may be appealed to the Executive Director of the Authority. Once a dispute has been submitted to ADR, no party shall discuss the elements of the dispute with the Executive Director.

Final ADR - Mediation or Arbitration:

At the request of the Contractor, appeal decisions rendered by the Executive Director may be appealed by the Contractor to a Final ADR process of either Mediation or Arbitration. The costs of Mediation or Arbitration shall be borne equally by the Contractor and the Authority. Decisions by either a Mediator or an Arbitrator(s) will be non-binding unless the parties mutually agree in writing at the time of process selection that such recommendations will be binding.

NOTE: It is the intent of this Specification to retain maximum flexibility for the specific procedures for either Preliminary or Final Alternative Dispute Resolution. The processes shall follow the guidelines of construction industry ADR practices in general. The Authority and the Contractor will contribute equal input to the selection of location, methods, experts and timing of such processes. When a Dispute Review Board is utilized, the Authority and the Contractor shall have equal veto power in the selection of DRB composition.

111.1.8 Commissioner Communications Before Appeal

This Subsection is deleted and not replaced.

111.2 Project Level Negotiation to 111.6 Judicial Review

These Subsections (inclusive) are deleted and not replaced.

SECTION 112 - DEFAULT AND TERMINATION

112.2 Termination

This Subsection is amended by the addition of the following:

When the Contract is terminated, the Contractor shall, if so required by the Authority, promptly remove any or all of his/her equipment and supplies from the Project site or from other property of the

Authority, failing which the Authority may remove such equipment and supplies at the expense of the Contractor.

SECTION 203 - EXCAVATION AND EMBANKMENT

203.01 Description

The following is added at the end of the last paragraph:

Unclassified bids are submitted at the sole risk of the Bidder. The Contractor shall only be entitled to compensation at the unit prices submitted for the actual quantity of Common Excavation and Rock Excavation. No additional compensation shall be considered for changes from the estimated quantities to the actual quantities regardless of the reason for the change.

203.18 Method of Measurement

The seventh paragraph is amended as follows:

Elevations for final cross sections shall be determined as shown and calculated on the Plans. Measurements shall be determined at the bottom of loam line unless otherwise noted.

SECTION 502 - STRUCTURAL CONCRETE

502.10 Forms and False Work

D. Removal of Forms and False Work

The first paragraph is amended as follows:

In the first, second, and third sentences, "forms and false work" are replaced with "forms".

502.11 Placing Concrete

G. Concrete Wearing Surface and Structural Slabs on Precast Superstructures

The last paragraph is amended as follows:

In the third sentence, replace "The temperature of the concrete shall not exceed 24°C [75°F] at the time of placement." with "The temperature of the concrete shall not exceed 24°C [75°F] at the time the concrete is placed in its final position."

502.15 Curing Concrete

The first paragraph is amended as follows:

The first sentence is replaced with: "All concrete surfaces shall be kept wet with clean, fresh water for a curing period of at least seven (7) days after concrete placing, with the exception of vertical surfaces as provided for in Subsection 502.10 (D), Removal of Forms and False Work.

The second paragraph is amended as follows:

The first two sentences are deleted.

The third paragraph is amended as follows:

The entire paragraph, which starts "When the ambient temperature....", is deleted.

The fourth paragraph is amended as follows:

Delete "approved" to now read "...continuously wet for the entire curing period…".

The fifth paragraph is amended as follows:

The second sentence is changed from "...as soon as it is possible to do so without damaging the concrete surface." to: "...as soon as possible."

The seventh paragraph is amended as follows:

The first sentence is changed from "...until the end of the curing period." to "...until the end of the curing period, except as provided for in Subsection 502.10(D), Removal of Forms and False Work."

SECTION 503 - REINFORCING STEEL

503.06 Placing and Fastening

The second paragraph is amended as follows:

The third sentence is changed from "All tack welding shall be done in accordance with Section 504, Structural Steel." to "All tack welding shall be done in accordance with AWS D1.4, Structural Welding Code - Reinforcing Steel."

SECTION 504 - STRUCTURAL STEEL

504.09 Facilities for Inspection

The following is added to the last paragraph:

Failure to comply with the above requirements will be consider to be a denial to allow access to Work by the Contractor. The Department will reject any Work done when access for inspection is denied.

504.18 Plates for Fabricated Members

The second paragraph is amended as follows:

The first sentence is changed from "…ASTM A 898/A 898 M..." to "...ASTM A 898/A 898 M or ASTM A 435/A 435 M as applicable and...".

504.31 Shop Assembly

The following is added to the last sentence:

The minimum assembly length shall include bearing centerlines of at least two substructure units.

SECTION 535 - PRECAST, PRESTRESSED CONCRETE SUPERSTRUCTURE

535.02 Materials

"Steel Strand for Concrete Reinforcement" is changed to "Steel Strand."

The following is added to the beginning of the third paragraph:

Concrete shall be Class P conforming to the requirements in this Subsection. Twenty-eight day compressive strength shall be as stated on the Plans. Coarse aggregate...

535.05 Inspection Facilities

The following is added to the last paragraph:

Failure to comply with the above requirements will be considered to be a denial to allow access to Work by the Contractor. The Department will reject any Work done when access for inspection is denied.

535.26 Lateral Post-Tensioning

The first paragraph is replaced with the following:

Overstressing strands for setting losses cannot be accomplished for chuck to chuck lengths of 7.6 m [25 feet] and less. In such instances, refer to the Plans for all materials and methods. Otherwise, post-tensioning shall be in accordance with PCI standards and shall provide the anchorage force as noted in the Plans. The applied jacking force shall be no less than 100 percent of the design jacking force.

SECTION 603 - PIPE CULVERTS AND STORM DRAINS

603.0311 Corrugated Polyethylene Pipe for Option III

Minimum Mandrel Diameter Table is replaced with the following:

Nominal Size US Customary (in)	Minimum Mandrel Diameter (in)	Nominal Size Metric (nun)	Minimum Mandrel Diameter (mm)
12	11.23	300	280.73
15	14.04	375	350.91
18	16.84	450	421.09
24	22.46	600	561.45
30	28.07	750	701.81
36	33.69	900	842.18
42	39.30	1050	982.54
48	44.92	1200	1122.90

SECTION 604 - MANHOLES, INLETS, AND CATCH BASINS

604.02 Materials

The following are added:

Tops and Traps 712.07

Corrugated Metal Units	712.08
Catch Basin and Manhole Steps	712.09

SECTION 605 - UNDERDRAINS

605.05 Underdrain Outlets

The first paragraph is amended as follows:

In the second sentence, the words "metal pipe" are deleted.

SECTION 606 - GUARDRAIL

606.02 Materials

The fourth paragraph, which reads "Retroreflective beam guardrail delineators..." is deleted and replaced with the following:

Reflectorized sheeting for Guardrail Delineators shall meet the requirements of Subsection 719.01, Reflective Sheeting. Delineators shall be fabricated from high-impact, ultraviolet and weather resistant thermoplastic.

The eighth paragraph, which reads "The sole patented supplier of multiple mailbox..." is deleted and replaced with the following:

Acceptable multiple mailbox assemblies shall be listed on the Department's Approved Products List and shall be NCHRP 350 tested and approved.

606.09 Basis of Payment

The second and third sentences in the first paragraph are deleted in their entirety and replaced with the following:

Butterfly-type guardrail reflectorized delineators shall be mounted on all W-beam guardrail at an interval of every 10 posts [62.5 feet] on tangents sections and every five posts [31.25 feet] on curved sections as directed by the Resident. On divided highways, the delineators shall be yellow on the left hand side and silver/white on the right hand side. On two-way roadways, the delineators shall be silver/white on the right hand side. All delineators shall have retroreflective sheeting applied to only the traffic facing side. Reflectorized guardrail delineators will not be paid for directly, but will be incidental to the guardrail items.

SECTION 615 - LOAM

615.02 Materials

This Subsection is amended as follows:

One hundred percent of the loam material must pass the two inch sieve.

Organic Content	Percent by Volume
Humus	"5% - 10%", as determined by Ignition Test

SECTION 618 - SEEDING

618.01 Description

The first sentence is amended to read:

This Work shall consist of furnishing and applying seed.

The words “and cellulose fiber mulch” are deleted from 618.01(a).

618.03 Rates of Application

The last sentence in 618.03(a) is deleted and replaced with the following:

These rates shall apply to Seeding Method 2, 3, and Crown Vetch.

In 618.03(c), "1.8 kg [4 lb]/unit." is deleted and replaced with "1.95 kg [4 lb]/unit."

618.09 Construction Method

In 618.09(a) 1, sentence two, "100 mm [four inches]" is replaced with "25 mm [one inch] (Method 1 areas) and 50 mm [two inches] (Method 2 areas)".

618.15 Temporary Seeding

The Pay Unit is changed from “Unit” to “Kg [lb]”.

SECTION 620 - GEOTEXTILES

620.03 Placement

Section (c): Replace "Non-woven" in title with "Erosion Control".

The word "Non-woven” in the first paragraph is replaced with "Woven monofilament”.

The word "Non-woven" in the second paragraph is replaced with "Erosion Control".

620.07 Shipment, Storage, Protection and Repair of Fabric

Section (a): the second sentence is replaced with the following:

Damaged geotextiles, as identified by the Resident, shall be repaired immediately.

620.09 Basis of Payment

Pay Item 620.58: "Non-woven" is replaced with "Erosion Control".

Pay Item 620.59: "Non-woven" is replaced with "Erosion Control".

SECTION 621 - LANDSCAPING

621.0036 Establishment Period

In the fourth and fifth paragraphs, "time of Final Acceptance" is replaced with "end of the period of establishment".

In the seventh paragraph, "Final Acceptance date" is replaced with “end of the period of establishment”; and "date of Final Acceptance" is replaced with "end of the period of establishment".

SECTION 626 - HIGHWAY SIGNING

626.034 Concrete Foundations

The following is added to the end of the second paragraph:

Pre-cast and cast-in-place foundations shall be warranted against leaning and corrosion for two years after the Project is complete. If the lean is greater than two degrees from normal or the foundation is spalling within the first two years, the Contractor shall replace the foundation at his own cost.

SECTION 639 - ENGINEERING FACILITIES

639.04 Field Offices

This Subsection is amended by the addition of the following:

The Field Office location shall be approved by the Resident and shall be provided when the Contract starts and shall remain until the Contract is complete. The Contractor shall be responsible for furnishing and maintaining electricity, heat, facsimile machine and appliances for the entire duration of the Contract, which includes periods of time which Work has been suspended.

The Contractor shall provide a plain paper (8-1/2” x 11”) fax/copier machine with a 10 page (minimum) auto document feeder, 15 page (minimum) fax memory, 50 sheet (minimum) paper capacity, and a transmission speed of six pages (minimum) per minute for the Resident's use during the Project. All maintenance and supplies shall be the responsibility of the Contractor. The fax machine shall be connected to a separate telephone line so that the fax machine operates independent of the telephone and answering machine. A total of three phone lines shall be provided by the Contractor. All of the costs associated with the above shall be the responsibility of the Contractor except for the monthly telephone charges.

The following are not required:

- Accessible route conforming to the Americans with Disabilities Act
- Wheelchair accessible toilet

639.09 Telephone

This Subsection is amended as follows:

The Contractor shall be reimbursed at cost for the monthly telephone service charges. Telephone service shall remain throughout the Contract including periods of seasonal shutdowns.

639.11 Basis of Payment

The following is added after the first paragraph:

The Contractor shall be reimbursed at cost for the monthly telephone service charges. No additional markup will be allowed. The Contractor shall submit copies of the monthly bills to the Resident for payment.

SECTION 652 - MAINTENANCE OF TRAFFIC

652.2 Materials

The first sentence in the second paragraph is replaced with the following:

All construction signs shall be fabricated with super high intensity (ASTM 4956 – Type VII) retroreflective sheeting. All construction signs and construction sign packages shall have the Type VII sheeting material. 3924 Diamond Grade fluorescent orange sheeting manufactured by 3M conforms to ASTM 4956 – Type VII.

652.2.4 Other Devices

The eighth paragraph is amended by the addition of the following:

The Portable Message Signs shall be capable of being programmed remotely by telephone, of monitoring the speed of traffic in a travel lane, and of displaying a message in response to a vehicle exceeding an allowable speed threshold. The Contractor shall submit a catalog cut to the Resident for approval, establish a cellular account so that signs may be programmed remotely and provide training for the operation of the sign to the Resident.

The portable-changeable message signs may be moved throughout the Project area as required to provide advance warning of construction operations which may impact the flow of traffic as well used during lane closures to display messages relative to the speed of traffic. The Contractor shall remove, transport and maintain the signs as directed and approved by the Resident.

The Authority will be responsible for the actual programming of the signs.

A deduction will be made from money due the Contractor for signs that fail to operate for extended periods of time.

The following Subsection is added:

652.2.5 Safety Vests

All jobsite personnel shall wear a safety vest labeled as ANSI 107-199 standard performance for Class 2 risk exposure or an equivalent.

652.3.1 Responsibility of the Department

The first paragraph is deleted and replaced with the following:

The Authority will provide Project specific traffic control requirements and traffic control plans for use by the Contractor. The specific traffic control requirements for the Project are identified in Special Provision Section 652, Maintenance of Traffic (Specific Project Maintenance of Traffic Requirements). No

revisions to these requirements or Plans will be permitted unless the Contractor can thoroughly demonstrate an overall benefit to the public and a Contract Modification is approved.

The following sentence is added to the end of this Subsection:

The Maine Turnpike Authority may erect lane closures on the mainline within the Project area to collect survey, provide layout, and for any other reasons deemed necessary by the Resident.

652.3.2 Responsibility of the Contractor

The first paragraph is amended as follows:

The Contractor shall provide continuous and effective traffic control and management for the Project that is appropriate to the means, methods and sequencing allowed by the Contract; and consistent with the Traffic Control Plans and Maintenance of Traffic Specifications. The Contractor is responsible for ensuring a safe environment for the Contract workforce, local road users, and turnpike users; and maintaining the safe efficient flow of traffic through the construction zone at all times during the Contract. The protocols and requirements outlined in the Contract shall be strictly enforced.

The following paragraph is added:

The Contractor shall designate a supervisor to be responsible for the safe placement and maintenance of all traffic control devices. This individual shall be trained to safely install and maintain the devices. The Contractor shall submit to the Resident, in writing, documentation stating that this individual has reviewed and understands the traffic control requirements of the Contract and the Manual of Uniform Traffic Control Devices.

652.3.3 Submittal of Traffic Control Plan

This Subsection is deleted and not replaced.

652.3.4 General

This Subsection is deleted in its entirety and replaced with the following:

Prior to starting any Work on any part of the Project adjacent to or being used by the traveling public, the Contractor shall install the appropriate traffic control devices in accordance with the Plans, Specifications and the latest edition of the Manual of Uniform Traffic Control Devices, Part VI. The Contractor shall continuously maintain the traffic control devices in their proper position, and they shall be kept clean, legible and in good repair throughout the duration of the Work. The Contractor shall correct all problems or violations upon observation by the Contractor or upon notification by the Resident. Failure to correct a problem within one hour of notification during non-working hours or to respond immediately to a problem during Work hours, shall result in a penalty of $150.00 per occurrence. The Resident shall be the sole judge as to the time and response.

No equipment or vehicles of the Contractor, their Subcontractors, or employees engaged in Work on this Contract shall be parked or stopped on lanes carrying traffic, or on lanes or shoulders adjacent to lanes carrying traffic, at any time, except as required by ongoing Work operations. Contractor equipment or vehicles shall never be used to stop, block, or channelize traffic.

Vehicles parked on the shoulder shall be located so all portions of the vehicle(s) are a minimum of one foot from the traveled way. No operation (including loading or unloading vehicles) shall be conducted

on or near the traveled lanes or shoulders without first setting up the proper lane closure and traffic control devices. These precautions shall be maintained at all times while this Work is being performed.

The Contractor shall keep all paved areas of the highway as clear as possible at all times. No materials shall be stored on any paved area of the highway or within 30 feet of the traveled way (unless protected by concrete barriers and specifically approved by the Resident). Private vehicles owned by Contractor's employees shall be parked close together in a group no closer than 30 feet from the traveled way in pre-approved areas.

Channelization devices shall include Vertical Panel Markers, Barricades, Cones, and Cones and Drums. These devices shall be installed and maintained at the spacing shown on the Traffic Control Plans, or determined by the MUTCD, through the Work area.

No lane closures will be allowed during non-working hours, weekends and/or holiday periods unless included in the Contract as long-term traffic control requirement or approved by the Resident.

Any special signs, barricades or other devices deemed necessary by the Resident shall be furnished and maintained by the Contractor. Extra care shall be taken so that the traffic flow will not be disturbed. The use of construction signs and warning devices not shown on the Plans or in the MUTCD, unless approved by the Resident, will be prohibited.

The Contractor's personnel and equipment shall avoid crossing traffic whenever possible. No Contractor's vehicle may slow down or stop in a traffic lane unless said lane has previously been made safe with signs and barricades as required by the Resident.

No vehicle will move onto the traveled way at such a time or in such a manner so as to cause undue concern or danger to traffic approaching from either direction. The Contractor or his employees are not empowered to stop traffic.

The Contractor shall take necessary care at all times, in all operations and use of his equipment, to protect and facilitate traffic. During periods of idleness, the equipment shall not be left in a way to obstruct the traffic artery or to interfere with traffic.

The following Subsection is added:

652.3.41 Local Road General Requirements

Channelization devices consisting of barricades or drums, at a maximum spacing of 50 feet, shall be used in guardrail areas when neither the existing nor the new guardrail is in place. The Contractor shall not remove guardrail until absolutely necessary for construction operations in that area. The guardrail shall be replaced as soon as possible thereafter.

All excavation areas adjacent to the roadway shall be channelized continuously in both directions for the length of the Project in all areas where the centerline strip is not effective in accordance with the latest edition of MUTCD.

Where the roadway is adjacent to an area being excavated or filled, a minimum two foot shoulder should be maintained and the effective slope of the earth excavation or fill slope, beyond the two foot shoulder, shall not be steeper than 1-1/2 horizontal to 1 vertical. The effective slope of rock excavation shall not be steeper than 1 horizontal to 1 vertical beyond the two foot shoulder. In the case of cuts over five feet deep, an earth berm or other approved barrier shall be placed between the travel lane and the excavated area. In this instance, travel speeds shall be limited by specific advisory signing to 20 miles per hour in all cases. When excavation does not leave sufficient usable widths to maintain two-way traffic as provided in

Subsection 105.4, Maintenance of Work, one-lane traffic controlled by a traffic signal or continuous flagging may be considered. Closely spaced vertical panels, drums or other channelizing devices shall be used on any of these types of areas that are left exposed for short durations.

When paving operations or shoulder grading leave a three inch or less exposed vertical face at the edge of the traveled way, channelization devices shall be placed two feet outside of the pavement at intervals not exceeding 600 feet and a 48 inch by 48 inch W8-9 "Low Shoulder" sign shall be placed at a maximum spacing of 1/2 mile. When paving operations or shoulder grading leave a three inch or grater exposed vertical face at the edge of the traveled way, the Contractor shall place shoulder material for a width of at least four feet to meet the pavement grade, and place channelizing devices as above, before the lane is opened to traffic.

652.3.5 Installation of Traffic Control Devices

The first paragraph is deleted and replaced with the following:

Portable signs shall be erected on temporary sign supports approved crashworthy devices in conformance with NCHRP 350 requirements so that the bottom is either 1) 300 mm [12 inches]; or 2) greater than 1.5 m [five feet] above the traveled way. Post-mounted signs shall be erected so the bottom is no less than 1500 mm [five feet] above the traveled way, and 2100 mm [seven feet] above the traveled way in business, commercial, and residential areas. All post-mounted signs on the turnpike mainline shall be erected so the bottom is no less than 2100 mm [seven feet] above the traveled way. Post-mounted signs must also be erected so that the sign face is in a true vertical position. All signs shall be mounted within four feet of the existing edge of pavement. All signs shall be placed so that they are not obstructed in any manner and immediately modified to ensure proper visibility if obstructed. Due to Contractor or Project staging, it may be necessary to relocate previously erected portable or post-mount signs so they are clearly visible. Signs may be mounted lower or higher to fit the situation when authorized by the Resident. Cones shall either be weighted or nailed. Tires will not be allowed as weights.

The following is added to the end of the third paragraph:

NHCRP 350 tested drums with tire sidewall ballasts are acceptable. During winter periods, drums shall be placed on the grass shoulder or removed from the roadway so winter maintenance operations will not be impacted. This requires the placement of drums behind the median guardrail. Drums shall not be placed on snow banks.

The following is added to the end of the fifth paragraph:

The method of covering existing signs must be approved by the Resident. The use of adhesives on the sign face is prohibited.

The sixth paragraph is deleted and replaced with the following:

The Contractor shall replace damaged or missing traffic control devices with similar devices of acceptable quality.

The following paragraph is added to the end of this Subsection:

The Contractor is required to cover all existing signs, including regulatory and warning signs, within the Work zone which may conflict with the proposed construction signs. The Contractor is also required to cover all permanent construction signs when they conflict with a daily traffic control setup.

652.3.6 Traffic Control

The first sentence of the first paragraph is deleted and replaced with the following:

The minimum roadway width for local road one-way and two-way traffic, and minimum number of lanes and lane widths for the Maine Turnpike, are identified on the Project's traffic control plans and/or in Special Provision Section 652, Maintenance of Traffic (Specific Project Maintenance of Traffic).

The last sentence of the third paragraph is deleted and not replaced.

652.41 Traffic Officers

The first paragraph is deleted and replaced with the following:

Local road traffic officers, if required, shall be uniformed police officers. State Police officers and vehicles shall be used to warn and stop traffic on the Maine Turnpike. All State Police shall be scheduled through the Maine Turnpike Authority. The Authority will make payment for the State Police officers and vehicles directly to the State Police.

The Contractor will not be entitled to additional compensation if scheduled Work is not completed due to the unavailability of State Police.

652.6 Night Work

The sixth and seventh paragraphs are deleted and not replaced.

The following Subsection is added:

652.61 Construction Vehicles

The Contractor shall furnish approved signs reading "Construction Vehicle - Keep Back" to be used on trucks hauling to the Project. The signs shall be a minimum of 30 inch by 60 inch, Black and Orange, Type VII. The older type "Construction Vehicle - Do Not Follow" may be used until the end of their service life.

All vehicles used on the Project shall be equipped with amber flashing lights, visible from both front and rear, or by means of a single, approved type, revolving, flashing or strobe lights mounted so as to be visible 360 degrees. The vehicle flashing system shall be in continuous operation while the vehicle is on any part of the Project. Dump trucks and utility trucks shall have a strobe light mounted on each side of the vehicle.

652.7 Method of Measurement

The following is added to the end of the first paragraph:

The per unit measurement for payment of the portable–changeable message sign shall include the establishment and payment of a cellular phone account so that the portable–changeable message sign may be programmed remotely.

The following is added to the end of the second paragraph:

The number and locations of Flaggers will be determined by the Resident. Flaggers used during the Contract, for the convenience of the Contractor, will not be measured separately for payment, but shall be

incidental to the various pay items. The Authority will make payment for the State Police officers and vehicles directly to the State Police when utilized for mainline traffic control activities. State Police escorts, if required to move oversize material or equipment loads to the jobsite, will not be paid separately, but shall be incidental to the various pay items.

652.8.2 Other Items

The last paragraph is deleted and replaced with the following:

There will be no payment made under any 652 pay items after the expiration of the adjusted total Contract time.

SECTION 653 - POLYSTYRENE PLASTIC INSULATION

653.05 Placing Backfill

In the second sentence, "...shall be not less than 150 mm [six inches] loose measure." is changed to "...shall be not less than 250 mm [10 inches] loose measure."

In the third sentence "...crawler type bulldozer of not more than 390 kg/m^2 [80 lb/ft^2] ground contact pressure..." is changed to "...crawler type bulldozer of not more than 4875 kg/m^2 [2000 lb/ft^2] ground contact pressure..."

653.06 Compaction

In the final sentence "...crawler type bulldozer of not more than 390 kg/m^2 [80 lb/ft^2] ground contact pressure..." is change to "...crawler type bulldozer of not more than 4875 kg/m^2 [2000 lb/ft^2] ground contact pressure..." it]."

SECTION 656 - TEMPORARY SOIL EROSION AND WATER POLLUTION CONTROL

Section 656 is deleted in its entirety and replaced with the following:

656.01 Description

This Work shall consist of providing temporary erosion control during construction in accordance with these Specifications, standard details, Best Management Practices, or as otherwise directed.

All temporary erosion control devices shall be in place and approved by the Resident prior to any embankment and excavation operations. The Contractor is responsible for repairing and replacing damaged or missing sandbags, haybales, and silt fence material. The Contractor shall maintain these devices in a clean and properly operating condition as described herein.

The Contractor is responsible for all temporary drainage and erosion control measures. The Contractor shall review his construction operations and staging to determine if additional erosion control measures are required. The Resident may also request additional erosion control measures. The cost for all erosion control devices necessary, due solely to the Contractor's construction operations and are not shown on the Plans, shall be borne solely by the Contractor. The frequency of inspection of these devices by the Contractor and the Erosion Control Compliance Officer (ECCO) shall be bi-weekly and immediately following a rainfall of greater than 1/2 inch in a 24-hour period.

In areas of ledge or frozen ground only, the Contractor may opt to furnish and install an erosion control filter berm in lieu of silt fence. The erosion control filter berm shall be a water permeable windrow of a composted bark mix to remove suspended soil particles from water moving off the site. Erosion control filter berm shall be considered an erosion control device. This material and specific application shall be submitted to the Resident for approval.

656.02 General

Baled hay shall be bales at approximately 350 by 450 by 750 mm [14 by 18 by 30 inch], or an equivalent, securely tied to form a firm bale.

Sandbags shall consist of heavy cloth or woven plastic bags, approximately 0.03 m3 [one cubic foot] capacity, filled with sand or gravel.

Dumped stone shall be a graded mixture of large and small stone with approximately 50 percent of the stones larger than 150 mm [six inch].

Flexible drainage pipe shall consist of collapsible neoprene pipe, a minimum of 12 inches in diameter or equal.

656.03 Silt Fence

(a) Posts

Either hardwood posts or steel posts shall be used.

Hardwood posts shall be straight, at least 450 mm [18 inches] longer than the height of the silt fence and at least 32 mm by 32 mm [1 inch by 1 inch].

Staples shall be of No. 9 wire.

Steel posts shall be at least 450 mm [18 inches] longer than the height of the silt fence and have the means provided for fastening wire to the fence.

(b) Wire Support Fence

If required, wire support fence shall be at least 50 mm [2 inches] higher than the height of the silt fence. Horizontal and vertical wires shall be spaced no more than 150 mm [6 inches] apart. The top and bottom wires shall be at least 10 gauge; all other wires at least 12 gauge.

(c) Silt Fence

The woven geotextile fabric and components shall be made from polypropylene, polyester, polymide or other chemically stable material and be resistant to ultraviolet radiation degradation for at least 12 months of installation. Silt retention capacity shall be no less than 75 percent. The fabric shall have a Mullen burst test of no less than 1790 kPa [260 pounds per square inch] with a maximum average sieve opening size of 850 pm to 250 pm [No. 20 to No. 60]. Roll width of the fabric shall be no less than 150 mm [6 inches] wider than the height of the fence, except fabric for boom supported floating silt fence which shall be no less than 600 mm [two feet] wider than the design width.

(d) Flotation Devices

The flotation boom and weighing devices for boom supported floating silt fence shall be sufficient to hold the fence in an approximately vertical position.

656.04 Temporary Erosion Checks

Temporary erosion checks shall be constructed in ditches and at other locations designated. Checks shall be in accordance with the Standard Detail unless otherwise directed.

Baled hay, sandbags, or both, shall be used in other areas as necessary to inhibit soil erosion.

Sediment deposits behind haybales and silt fence shall be removed when the depth of sediment reaches 50 percent of the erosion control device height.

The Contractor is also required to have on-site, at all times, 25 percent additional Contract quantities of silt fence for use as backup devices.

656.041 Erosion Control Filter Berm

The erosion control berm shall be placed uncompacted, in a windrow in locations approved by the Resident. The cross section of the berm shall be four feet wide at the base and 1-1/2 feet high at the center. The erosion control filter berm shall be removed when no longer required, as determined by the Resident, and shall be distributed over an adjacent area.

656.05 Temporary Berms

When designated, temporary barriers shall be constructed along the edge of the embankment. The barriers shall be of embankment earth material, gravel or sand as available and shaped approximately as shown in the Standard Details. The barriers shall be compacted with the wheels of construction equipment. When placed on pavement, the berms shall be constructed of asphalt grindings or other non-erodible soil material as approved by the Resident, and shaped as shown in the Standard Details.

At designated intervals, temporary slope drains shall be constructed with a crescent shaped barrier placed at each slope drain to direct the water into the inlet pipe.

656.06 Temporary Slope Drains

Collapsible pipe with corrugated metal pipe inlet shall be placed down the embankment slopes at designated locations and in accordance with the Best Management Practices.

At the outlet end of the drain, dumped stone shall be placed to prevent scoring unless otherwise directed.

656.07 Dumped Stone

Dumped stone shall be placed at designated locations and shaped to the extent necessary to spread the stone over the area and in sufficient depth to prevent soil erosion.

656.08 Silt Fence

The silt fence shall be installed at all environmentally sensitive areas as shown on the Plans or as directed. The Contractor shall have the option to provide a reinforced filter fabric or an un-reinforced filter fabric attached to a wire fence.

The fence posts shall be spaced as specified by the Resident, however, not to exceed a maximum of 2.5 m [eight feet] apart when either type of silt fence is used and be driven a minimum of 450 mm [18 inches] into the ground.

The geotextile fabric shall be secured to the post or fence by suitable staples, tie wire or hog rings in such a manner as to prevent tearing and sagging of the fabric. The bottom of the geotextile fabric shall be entrenched into the ground a minimum depth of 150 mm [six inches] to prevent water from flowing under the fence. The geotextile shall be spliced together only at support posts with a minimum 150 mm [six inches] overlap and secure post connection which prevents leakage of silt. The top of the geotextile shall be installed with a reinforced top end section.

The Contractor shall maintain the silt fence in a functional condition at all times. All deficiencies shall be immediately corrected by the Contractor. The Contractor shall make a daily inspection of the silt fences in areas where construction activity causes drainage runoff, to ensure that the silt fences are properly located for effectiveness. Where deficiencies exist, additional silt fences shall be installed as approved or directed.

Sediment deposits shall be removed when sediments reach 50 percent of the height of the device. All sediment deposits remaining in place after the device is no longer required shall be graded to conform with the existing ground, seeded, and mulched immediately.

Geotextile fabric which has decomposed or has become ineffective and is still needed shall be replaced with material equal to the original design.

656.081 Boom Supported Floating Silt Fence

The silt fence fabric shall be securely attached to the flotation boom with a continuous weight placed the entire length of the fence to maintain the fence in a vertical submerged position from the surface of the water to the design depth.

Anchor's shall be placed at the ends of the fence, and intermediate locations if necessary, to hold the fence securely in place.

656.082 Maintenance

The erosion control devices will be cleaned, repaired, or replaced as necessary. All deficiencies shall be corrected immediately by the Contractor.

656.085 Erosion Control Compliance Officer

The Contractor shall designate an Erosion Control Compliance Officer (ECCO) on this Project who shall accompany the Resident's ECCO in the inspection of all erosion control devices. An inspection log shall be maintained by the Resident and the log shall be signed by the Resident's ECCO and the Contractor's ECCO after each inspection. Failure to comply with the erosion and sedimentation control requirements herein or as directed by the Resident's ECCO within 24-hours after the violation is noted in the inspection log, will result in the $1,000 per day per violation penalty until the violation is corrected to the satisfaction of the Resident.

656.09 Removing and Disposing

When no longer needed, material and devices for temporary erosion control shall be removed or may be left in place and dispersed over an adjacent area, as directed.

When removed, such devices may be reused in other locations provided they are in good condition and suitable to perform the erosion control for which they are intended.

When dispersed over adjacent areas, the material shall be scattered to the extent that it causes no unsightly conditions nor creates future maintenance problems. Dumped stone shall be dispersed or covered in such a manner that it will not interfere with future mowing operations.

656.10 Method of Measurement

Baled hay and sandbags will be measured for payment by the number of bales or bags satisfactorily placed. Dumped stone will be measured for payment by the cubic meter [cubic yard] in vehicles.

Temporary berms and temporary slope drains will be measured for payment by the meter [linear foot] measured parallel with the flow line including the pipe inlet.

Temporary silt fence will be measured by the meter [linear foot] along the gradient of the fence, end post to end post.

Boom supported floating silt fence will be measured by the meter [linear foot] not including anchorages.

Erosion control filter berm shall be measured by the linear foot.

The quantity of additional haybales and silt fence material required herein will be measured for payment only when and if they are actually put to use as additional measures on the Project as directed by the Resident. Haybales and silt fence material used for maintenance or replacement of existing devices will not be measured for payment.

The removal of silt and other material from behind the haybales and silt fence will not be measured separately for payment, but shall be incidental to the Erosion Control items.

656.11 Basis of Payment

The accepted quantity of baled hay or sandbags will be paid for at the Contract unit price each for each bale or bag which price shall be full compensation for furnishing and placing the bales or sandbags, for furnishing and driving the stakes for baled hay and for the removing and disposing of the bales, stakes and sandbags when no longer needed.

The accepted quantity of temporary berms will be paid for at the Contract unit price per meter [linear foot] of berm which price shall be full compensation for furnishing, placing and compacting material, for maintaining and for removing the berm when no longer needed.

There will be no separate payment for excavation done in the construction of temporary erosion control items under this Section and all necessary excavation shall be incidental to the Work.

The accepted quantity of dumped stone will be paid for at the Contract unit price per cubic

meter [cubic yard] which price shall be full compensation for furnishing the stone, transporting, placing and shaping. Payment for removal or for covering will be made under Item 629.05, Hand Labor, and the appropriate equipment rental items.

The accepted quantity of temporary silt fence and boom supported floating silt fence will be paid for at the Contract unit price per meter [linear foot] complete in place. Payment shall be full compensation for furnishing, installing, maintaining, for replacing deteriorated geotextile and clogged geotextile when required and for removing and disposing of the fence when no longer needed.

The accepted quantity of erosion control filter berm will be paid for at the Contract unit price per linear foot under Item 656.632, 30 Inch Temporary Silt Fence, which price shall be full compensation for furnishing, placing, and removing the erosion control filter berm.

The removal of sediments and debris that accumulate around erosion control devices, when directed by the Resident, will be paid for under the appropriate Contract items.

Cost of seeding and mulching the area after removal of the temporary silt fence will be paid for at the Contract unit prices for Item 618, Seeding, and Item 619, Mulch.

Payment will be made under:

Pay Item		Pay Unit
656.50	Baled Hay, in place	Each
656.51	Sandbag, in place	Each
656.55	Dumped Stone	Cubic Meter [Cubic Yard]
656.60	Temporary Berms	Meter [Linear Foot]
656.62	Temporary Slope Drains	Meter [Linear Foot]
656.631	375 mm [15 inch] Temporary Silt Fence	Meter [Linear Foot]
656.632	750 mm [30 inch] Temporary Silt Fence	Meter [Linear Foot]
656.64	Boom Supported Floating Silt Fence	Meter [Linear Foot]

SECTION 701 – STRUCTURAL CONCRETE RELATED MATERIALS

701.10 Fly Ash - Chemical Requirements

All references to “ASTM C311’ are changed to “ASTM C114”.

SECTION 703 - AGGREGATES

703.06 Aggregate for Base and Subbase

The first paragraph is deleted and replaced with the following:

The material shall have a minimum degradation value of 15 as determined by Washington State DOT Test Method T113, Method of Test for Determination of Degradation Value (March 2002 version), except that the reported degradation value will be the result of testing a single specimen from that portion of a sample that passes the 12.5 mm [1/2 inch] sieve and is retained on the 2.00 mm [No. 10] sieve, minus any reclaimed asphalt pavement used.

703.22 Underdrain Backfill Material

The first paragraph is amended as follows:

"...for Underdrain Type B..." is changed to "... for Underdrain Type B and C..."

SECTION 706 - NON-METALLIC PIPE

706.06 Corrugated Polyethylene Pipe for Underdrain, Option I and Option II in Culvert Pipe

The first sentence is changed from "...300 mm diameters to 900 mm" to "...300 mm diameters to 1,200 mm".

The last sentence which begins "This pipe and resins..." is deleted in its entirety and replaced with the following:

The manufacturing plants of polyethylene pipe shall be certified by the Eastern States Consortium. Polyethylene pipe shall be accepted based on third party certification by the AASHTO's National Transportation Product Evaluation Program.

SECTION 709 - REINFORCING STEEL AND WELDED STEEL WIRE FABRIC

709.03 Steel Strand

The second paragraph is changed from "...shall be 12mm [1/2 inch] AASHTO M203M/M203 (ASTM A416/A416M)..." to "...shall be 15.24 mm [0.600 inch] diameter AASHTO M203 (ASTM A416)...".

SECTION 712 - MISCELLANEOUS HIGHWAY MATERIALS

The following Subsections are added:

712.07 Tops and Traps

These metal units shall conform to the Plan dimensions and to the following Specification requirements for the designated materials:

Gray iron castings shall conform to the requirements of AASHTO M105, Class 30, unless otherwise designated.

Carbon steel castings shall conform to the requirements of AASHTO M103/M103M. Grade shall be 450-240 [65-35] unless otherwise designated.

Structural steel shall conform to the requirements of AASHTO M183/M183M or ASTM A283/A283M, Grade B or better. Galvanizing, where specified for these units, shall conform to the requirements of AASHTO M 111.

712.08 Corrugated Metal Units

The units shall conform to Plan dimensions and the metal to AASHTO M36/M36M. Bituminous coating, when specified, shall conform to AASHTO M 190 Type A.

712.09 Catch Basin and Manhole Steps

Steps for catch basins and for manholes shall conform to ASTM C478M [ASTM C478], Section 13 for either of the following material:

(a) Aluminum steps-ASTM B221M, [ASTM B21 1] Alloy 6061-T6 or 6005-T5.

(b) Reinforced plastic steps steel reinforcing bar with injection molded plastic coating copolymer polypropylene. Polypropylene shall conform to ASTM D 4101.

712.23 Flashing Lights

Flashing lights shall be power operated or battery operated as specified.

(a) Power operated flashing lights shall consist of housing, adapters, lamps, sockets, reflectors, lens, hoods and other necessary equipment designed to give clearly visible signal indications within an angle of at least 45 degrees and from three to 90 m [10 to 300 feet] under all light and atmospheric conditions.

Two circuit flasher controllers with a two-circuit filter capable of providing alternate flashing operations at the rate of not less than 50 nor more than 60 flashes per minute shall be provided.

The lamps shall be 650 lumens, 120 volt traffic signal lamps with sockets constructed to properly focus and hold the lamp firmly in position.

The housing shall have a rotateable sun visor not less than 175 nun [seven inches] in length designed to shield the lens.

Reflectors shall be of such design that light from a properly focused lamp will reflect the light rays parallel. Reflectors shall have a maximum diameter at the point of contact with the lens of approximately 200 mm [eight inches].

The lens shall consist of a round one-piece convex amber material which, when mounted, shall have a visible diameter of approximately 200 mm [eight inches]. They shall distribute light and not diffuse it. The distribution of the light shall be asymmetrical in a downward direction. The light distribution of the lens shall not be uniform, but shall consist of a small high intensity portion with narrow distribution for long distance throw and a larger low intensity portion with wide distribution for short distance throw. Lenses shall be marked to indicate the top and bottom of the lens.

(b) Battery operated flashing lights shall be self- illuminated by an electric lamp behind the lens. These lights shall also be externally illuminated by reflex reflective elements built into the lens to enable it to be seen by reflex reflection of the light from the headlights of oncoming traffic. The batteries must be entirely enclosed in a case. A locking device must secure the case. The light shall have a flash rate of not less than 50 nor more than 60 flashes per minute from minus 30°C [minus 20°F] to plus 65°C [plus 150°F]. The light shall have an on time of not less than 10 percent of the flash cycle. The light beam projected upon a surface perpendicular to the axis of the light beam shall produce a lighted rectangular projection whose minimum horizontal dimension shall be five degrees each side of the horizontal axis. The effective intensity shall not have an initial value greater than 15.0 candelas or drop below 4.0 candelas during the first 336-hours of continuous flashing. The illuminated lens shall appear to be uniformly

bright over its entire illuminated surface when viewed from any point within an angle of nine degrees each side of the vertical axis and five degrees each side of the horizontal axis. The lens shall not be less than 175 mm [seven inches] in diameter including a reflex reflector ring of 13 mm [1/2 inch] minimum width around the periphery. The lens shall be yellow in color and have a minimum relative luminous transmittance of 0.440 with a luminance of 2854° Kelvin. The lens shall be one-piece construction. The lens material shall be plastic and meet the luminous transmission requirements of this Specification. The case containing the batteries and circuitry shall be constructed of a material capable of withstanding abuse equal to or greater than 1.21 mm thick steel [No. 18 U.S. Standard Gage Steel]. The housing and the lens frame, if of metal shall be properly cleaned, degreased and pretreated to promote adhesion. It shall be given one or more coats of enamel which, when dry shall completely obscure the metal. The enamel coating shall be of such quality that when the coated case is struck a light blow with a sharp tool, the paint will not chip or crack and if scratched with a knife will not powder. The case shall be so constructed and closed as to exclude moisture that would affect the proper operation of light. The case shall have a weep hole to allow the escape of moisture from condensation. Photoelectric controls, if provided, shall keep the light operating whenever the ambient light falls below 215 lx [20 foot candles]. Each light shall be plainly marked as to the manufacturer's name and model number.

If required by the Resident, certification as to conformance to these Specifications shall be furnished based on results of tests made by an independent testing laboratory. All lights are subject to random inspection and testing. All necessary random samples shall be provided to the Resident upon request without cost to the Authority. All such samples shall be returned to the Contractor upon completion of the tests.

712.32 Copper Tubing

Copper tubing and fittings shall conform to the requirements of ASTM B88M Type A [ASTM B88, Type K] or better.

712.33 Non-metallic Pipe, Flexible

Non-metallic pipe and pipe fittings shall be acceptable flexible pipe manufactured from virgin polyethylene polymer suitable for transmitting liquids intended for human or animal consumption.

712.34 Non-metallic Pipe, Rigid

Non-metallic pipe shall be Schedule 40 polyvinylchloride (PVC) that meets the requirement of ASTM D 1785. Fittings shall be of the same material.

712.341 Metallic Pipe

Metallic pipe shall be ANSI, Standard B36. 10, Schedule 40 steel pipe conforming to the requirements of ASTM A53 Types E or S, Grade B. End plates shall be steel conforming to ASTM A36/A36M.

Both the sleeve and end plates shall be hot dip galvanized. Pipe sleeve splices shall be welded splices with full penetration weld before galvanizing.

712.35 Epoxy Resin

Epoxy resin for grouting or sealing shall consist of a mineral filled thixotropic, flexible epoxy

resin having a pot life of approximately one hour at 10°C [50°F]. The grout shall be an approved product suitable for cementing steel dowels into the preformed holes of curb inlets and adjacent curbing. The sealant shall be an approved product, light gray in color and suitable for coating the surface.

712.36 Bituminous Curb

The asphalt cement for bituminous curb shall be of the grade required for the wearing course, or shall be Viscosity Grade AC-20 meeting the current requirements of Subsection 702.01, Asphalt Cement. The aggregate shall conform to the requirements of Subsection 703.07. The coarse aggregate portion retained on the 2.36 mm [No. 8] sieve may be either crushed rock or crushed gravel.

The mineral constituents of the bituminous mixture shall be sized and graded and combined in a composite blend that will produce a stable durable curbing with an acceptable texture. Bituminous material for curb shall meet the requirements of Section 403, Hot Bituminous Pavement.

712.37 Precast Concrete Slab

Portland Cement concrete for precast slabs shall meet the requirements of Section 502, Structural Concrete, Class A.

The slabs shall be precast to the dimension shown on the Plans and cross section and in accordance with the Standard Detail Plans for Concrete Sidewalk Slab. The surface shall be finished with a float finish in accordance with Subsection 502.14(c). Lift devices of sufficient strength to hold the slab while suspended from cables shall be cast into the top or back of the slab.

712.38 Stone Slab

Stone slabs shall be of granite from an acceptable source, hard, durable, predominantly gray in color, free from seams which impair the structural integrity and be of smooth splitting character. Natural color variations characteristic of the deposit will be permitted. Exposed surfaces shall be free from drill holes or indications of drill holes. The granite slabs in any one section of backslope must be all the same finish.

The granite slabs shall be scabble dressed or sawed to an approximately true plane having no projections or depressions over 13 mm [1/2 inch] under a 600 mm [two foot] straightedge or over 25 mm [one inch] under a 1200 mm [four foot] straightedge. The arris at the intersection of the top surface and exposed front face shall be pitched so that the arris line is uniform throughout the length of the installed slabs. The sides shall be square to the exposed face unless the slabs are to be set on a radius or other special condition which requires that the joints be cut to fit, but in any case shall be so finished that when the stones are placed side by side no space more than 20 mm [3/4 inch] shall show in the joint for the full exposed height.

Lift pin holes in all sides will be allowed except on the exposed face.

SECTION 717 - ROADSIDE IMPROVEMENT MATERIAL

717.03 C. Method #3 - Roadside Mixture #3

Seed proportions are amended as follows:

Crown Vetch	25.0%
Perennial Lupine	25.0%

Red Clover	12.5%
Annual Rye	37.5%

717.05 Mulch Binder

The third sentence is amended as follows:

"Paper fiber mulch may be used as a binder at the rate of 2.3 kg/unit [5 lb/unit]."

MAINE TURNPIKE AUTHORITY

SPECIFICATIONS

PART II – SPECIAL PROVISIONS

MAINE TURNPIKE AUTHORITY

SPECIFICATIONS

PART II - SPECIAL PROVISIONS

All work shall be governed by the Maine Department of Transportation Standard Specifications Revision of December 2002 except for that work which applies to sections of the Maine Department of Transportation Standard Specifications which are amended by the Maine Turnpike General Provisions and the following modifications, additions and deletions.

General Description of Work

This work includes the construction of a single new entry toll lane at Interchanges 32 and 46 as well as the complete reconstruction of the existing structural concrete slabs at the eight entrance lanes at Interchanges 32, 36, 46 Northbound and five exiting lanes at Interchanges 32 and 36; and all other work incidental thereto in accordance with the Plans and Specifications.

The work will also include upgrading the cash toll system at Interchanges 32, 36, and 46 Northbound including installation of tolling equipment in the utility buildings, canopy, toll booths, toll booth pits and islands; widening the northbound on ramp at Interchange 32; installation of signing and traffic control devices; maintenance of traffic; and all other work incidental thereto in accordance with the Plans and Specifications.

Plans

The drawings included in these Contract Documents, and referred to as the Plans, show the general character of the work to be done under this Contract. They bear the general title "Maine Turnpike Authority – Contract 2015.12 – Interchanges 32, 36, and 46 NB Toll Plaza Upgrades, (MM 31.6, 35.7, & 46.4)". The right is reserved by the Resident to make such minor corrections or alterations in the Plans as he deems necessary without change in the unit prices on the Schedule of Prices of the Proposal.

101.2 Definition

Holidays

The following is added after Memorial Day in the General Provisions:

Christmas Day 2015	12:01 p.m. preceding Wednesday to 12:01 p.m. the following Monday.
New Year's Day 2016	06:00 a.m. preceding Thursday to 06:00 a.m. the following Monday.
Independence Day 2016	06:00 a.m. preceding Friday to 06:00 a.m. the following Tuesday.
Christmas Day 2016	06:00 a.m. preceding Friday to

	06:00 a.m. the following Tuesday.
New Year's Day 2017	06:00 a.m. preceding Friday to 06:00 a.m. the following Tuesday.

102.11.2 Curable Bid Defects

This Subsection is amended by the addition of the following:

G. If the electrical subcontractor is not identified in the Proposal the Contractor will need to identify prior to Award.

H. If the electrical subcontractor identified in the Proposal is not prequalified by the Maine Department of Transportation for Traffic Signals and Lighting Projects the Contractor will need to agree to contract with a prequalified electrical subcontractor prior to Award.

103.3 Post-Bid Qualification

Subsections 103.3.1, and 103.3.2, and 103.3.3 are deleted and replaced with the following:

103.3.1 Prequalification Requirement for Award

If the Notice to Contractors lists a Prequalification requirement, the Apparent Successful Bidder must successfully complete the prequalification procedure as a condition of Award. The Authority may, in its sole discretion, substitute the process described in subsection 103.3.1.1 for the Prequalification Procedure, or require compliance with that process in addition to the Prequalification Procedure.

103.3.1.1 Notice and Information Gathering

The Authority will review the Bid Proposals. As a condition for Award of a Contract, the Authority may require an Apparent Successful Bidder to demonstrate to the Authority's satisfaction that the Bidder is responsible and qualified to perform the Work. The Authority may require this demonstration regardless of whether the Notice to Contractors listed a Prequalification requirement. If such information is required, the Authority, or the Authority's agent, will contact the Apparent Successful Bidder and request specific information. If requested by the Apparent Successful Bidder, this request can be in writing. The Apparent Successful Bidder shall respond to the request within 24-hours (one work day) unless both parties agree in writing to extend the deadline.

103.3.2 Notice of Determination

If the Authority determines that a Bidder is "Not Qualified", the Authority or its representative will notify the Bidder in writing of its determination. The notice will set forth the specific reasons therefore to the extent practical. Such reasons include the following:

A. Default(s) or termination(s) on past or current Contracts.

B. Failure to pay or settle all bills for labor, Materials or services on past or current Contracts.

C. Failure to provide Closeout Documentation on past or current Contracts.

D. Failure to fulfill warranty obligations on past or current Contracts.

E. Failure to comply with directives of the Department on past or current Contracts.

F. "Below Standard" performance as determined from the Authority's and/or MaineDOT's Contractor's Performance Rating process.

G. Inability of the Contractor to obtain or retain performance or Payment Bonds meeting MDOT requirements.

H. Failure to accept an Award of a Contract made by the Authority to the Contractor.

I. Making materially false, deceptive, or misleading Statements or omissions, whether or not under oath, regarding a claim on prior Contracts or on the Contractor's Prequalification Application.

J. Failure to provide information requested by the Authority pursuant to this Section 103.3.

K. Any of the reasons contained in Section 102.02 of the "Rules Regarding Debarment of Contractors", Maine Department of Transportation Register 17-229, Chapter 102 (October 2, 1985).

L. Debarment or suspension by any federal, State, or local governmental procurement agency or the Contractor's Agreement to refrain from Bidding as part of the settlement with any such agencies.

M. Other serious misconduct that the Authority reasonably determines will substantially and adversely affect the cost, quality or timeliness of Work, or the safety of Workers or the public.

N. Bidder has previously performed Work for the State or the Authority in an unsatisfactory manner.

O. Bidder does not have the capacity to perform the required Work in the opinion of the Authority.

P. This Project combined with other projects committed to by the Bidder puts him in excess of his capacity in the opinion of the Authority.

Q. Reasonable grounds for believing that the Bidder is interested in more than one Proposal for the Work contemplated.

R. Developments arise which, in the opinion of the Authority, adversely affect the

Bidder's responsibility.

S. Lack of qualifications as determined by the Authority.

103.3.3 Appeal

To appeal a "Not Qualified" determination, the Bidder must Deliver a written "Request for Appeal of Qualification Determination" to the Authority's Executive Director within 48 hours of Receipt of such determination. The Executive Director will grant such Requests for Appeal unless the Authority reasonably determines that Delay of Award pending appeal is likely to cause substantial harm to the interests of the Authority. If the Request for Appeal is denied, the determination of "Not Qualified" is upheld and the Award process will proceed without the unqualified Bidder.

If the Request for Appeal is granted, the Bidder and the Chief Operations Officer must deliver to the Executive Director any information or arguments that the parties want considered within 14 Days of Receipt of a "Not Qualified" determination.

Within 14 Days of Receipt of such information and arguments, the Executive Director will notify the Bidder in writing as to whether: (A) the determination of "Not Qualified" is upheld, modified or reversed; or (B) the Executive Director elects to submit the issue to binding or non-binding alternative Dispute resolution.

After a final determination of "Not Qualified", the Bidder's Bid Guaranty will be returned and the Bidder will be ineligible for Award of future Authority Contracts until the Bidder is prequalified pursuant to the MaineDOT's Prequalification Procedure.

103.4 Notice of Award

The following sentence is added:

The Maine Turnpike Authority Board is scheduled to consider the Contract Award on October 15, 2015.

104.3.8 Wage Rates and Labor Laws

The fourth paragraph under Records on GP Page 7 of 53 has been amended as follows:

A copy of each record must be filed monthly with the Maine Turnpike Authority. This information shall be sent directly to the Maine Turnpike Authority, Director of Engineering and Building Maintenance, Attention: Wage Rate Records, 2360 Congress Street, Portland, ME 04102. The records shall note the Maine Turnpike Contract Number.

The fair minimum hourly rates determined by the State of Maine Department of Labor for this Contract are as follows:

THIS DOCUMENT MUST BE CLEARLY POSTED AT THE PERTAINING STATE FUNDED PREVAILING WAGE CONSTRUCTION SITE

State of Maine
Department of Labor
Bureau of Labor Standards
Wage and Hour Division
Augusta, Maine 04333-0045
Telephone (207) 623-7906

Wage Determination - In accordance with 26 MRSA §1301 et. seq., this is a determination by the Bureau of Labor Standards, of the fair minimum wage rate to be paid laborers and workers employed on the below titled project.

Title of Project --------Contract 2015.12-Interchange 32,36 & 46 NB Toll System Upgrades

Location of Project –Portland, Cumberland County

2015 Fair Minimum Wage Rates
Heavy & Bridge Cumberland County

Occupation Title	Minimum Wage	Minimum Benefit	Total	Occupation Title	Minimum Wage	Minimum Benefit	Total
Asphalt Raker	$14.00	$0.00	$14.00	Line Erector - Power/Cable Splicer	$28.50	$8.40	$36.90
Backhoe Loader Operator	$18.00	$2.23	$20.23	Loader Operator - Front-End	$17.50	$3.02	$20.52
Boom Truck (Truck Crane) Operator	$22.50	$0.00	$22.50	Mechanic- Maintenance	$22.78	$3.99	$26.77
Bulldozer Operator	$18.00	$2.77	$20.77	Mechanic- Refrigeration	$22.00	$4.43	$26.43
Carpenter	$22.00	$2.31	$24.31	Millwright	$24.73	$3.42	$28.15
Carpenter - Rough	$18.03	$2.82	$20.85	Painter	$16.00	$0.00	$16.00
Cement Mason/Finisher	$16.81	$0.74	$17.55	Pile Driver Operator	$22.93	$4.29	$27.22
Communication Equip Installer	$23.57	$5.63	$29.20	Pipe/Steam/Sprinkler Fitter	$21.50	$4.30	$25.80
Comm Transmission Erector-Microwave & Cell	$18.00	$2.92	$20.92	Pipelayer	$23.06	$9.55	$32.61
Crane Operator =>15 Tons)	$24.35	$4.12	$28.47	Plumber (Licensed)	$24.00	$3.63	$27.63
Crusher Plant Operator	$18.65	$3.62	$22.27	Plumber Helper/Trainee (Licensed)	$17.88	$2.39	$20.27
Diver	$23.00	$8.25	$31.25	Propane & Natural Gas Servicer & Inst	$24.00	$3.13	$27.13
Driller - Rock	$17.50	$4.86	$22.36	Pump Installer	$22.00	$2.70	$24.70
Earth Auger Operator	$22.50	$10.46	$32.96	Reclaimer Operator	$20.75	$10.84	$31.59
Electrician - Licensed	$28.00	$14.20	$42.20	Rigger	$20.00	$3.18	$23.18
Electrician Helper/Cable Puller (Licensed)	$17.50	$8.16	$25.66	Roller Operator - Earth	$12.50	$4.76	$17.26
Excavator Operator	$20.75	$3.38	$24.13	Roller Operator - Pavement	$18.75	$5.25	$24.00
Fence Setter	$14.00	$0.00	$14.00	Screed/Wheelman	$17.00	$3.42	$20.42
Flagger	$9.00	$0.00	$9.00	Truck Driver - Light	$17.00	$1.46	$18.46
Ironworker - Reinforcing	$20.00	$1.23	$21.23	Truck Driver - Medium	$12.25	$0.93	$13.18
Ironworker - Structural	$23.70	$1.36	$25.06	Truck Driver - Heavy	$16.00	$2.34	$18.34
Laborers (Incl.Helpers & Tenders)	$15.00	$1.04	$16.04	Truck Driver - Tractor Trailer	$20.16	$3.31	$23.47
Laborer - Skilled	$17.05	$2.79	$19.84				

The Laborer classifications include a wide range of work duties. Therefore, if any specific occupation to be employed on this project is not listed in this determination, call the Bureau of Labor Standards at the above number for further clarification.

Welders are classified in the trade to which the welding is incidental.

Apprentices - The minimum wage rate for registered apprentices are those set forth in the standards and policies of the Maine State Apprenticeship and Training Council for approved apprenticeship programs.

Posting of Schedule - Posting of this schedule is required in accordance with 26 MRSA §1301 et. seq., by any contractor holding a State contract for construction valued at $50,000 or more and any subcontractors to such a contractor.

Appeal - Any person affected by the determination of these rates may appeal to the Commissioner of Labor by filing a written notice with the Commissioner stating the specific grounds of the objection within ten (10) days from the filing of these rates with the Secretary of State.

Determination No: HB-024-2015

Filing Date: August 31, 2015

Expiration Date: 12-31-2015

A true copy

Attest: Pamela Megathlin

Pamela Megathlin
Director
Bureau of Labor Standards

BLS 424HB (R2015) (Heavy & Bridge Cumberland)

THIS DOCUMENT MUST BE CLEARLY POSTED AT THE PERTAINING STATE FUNDED PREVAILING WAGE CONSTRUCTION SITE

State of Maine
Department of Labor
Bureau of Labor Standards
Wage and Hour Division
Augusta, Maine 04333-0045
Telephone (207) 623-7906

Wage Determination - In accordance with 26 MRSA §1301 et. seq., this is a determination by the Bureau of Labor Standards, of the fair minimum wage rate to be paid laborers and workers employed on the below titled project.

Title of Project --------Contract 2015.12-Interchange 32,36 & 46 NB Toll System Upgrades

Location of Project –Biddeford & Saco, York County

2015 Fair Minimum Wage Rates
Highway & Earthwork York County

Occupation Title	Minimum Wage	Minimum Benefit	Total	Occupation Title	Minimum Wage	Minimum Benefit	Total
Asphalt Raker	$16.25	$0.48	$16.73	Ironworker - Reinforcing	$20.00	$1.23	$21.23
Backhoe Loader Operator	$19.50	$0.71	$20.21	Ironworker - Structural	$22.65	$6.06	$28.71
Bricklayer	$23.24	$1.80	$25.04	Laborers (Incl.Helpers & Tenders)	$12.50	$0.78	$13.28
Bulldozer Operator	$18.83	$3.23	$22.06	Laborer - Skilled	$15.50	$3.60	$19.10
Carpenter	$19.00	$1.75	$20.75	Line Erector - Power/Cable Splicer	$27.42	$8.05	$35.47
Carpenter - Rough	$24.00	$1.90	$25.90	Loader Operator - Front-End	$17.00	$2.68	$19.68
Cement Mason/Finisher	$16.81	$0.74	$17.55	Mechanic- Maintenance	$18.00	$2.47	$20.47
Concrete Pump Operator	$19.00	$3.35	$22.35	Painter	$16.75	$3.50	$20.25
Crane Operator =>15 Tons)	$24.00	$4.81	$28.81	Paver Operator	$20.00	$1.57	$21.57
Crusher Plant Operator	$19.38	$3.44	$22.82	Pipelayer	$15.16	$1.73	$16.89
Diver	$23.00	$8.25	$31.25	Pump Installer	$22.00	$2.70	$24.70
Driller - Rock	$17.50	$4.86	$22.36	Reclaimer Operator	$20.75	$10.84	$31.59
Earth Auger Operator	$22.50	$8.14	$30.64	Rigger	$20.00	$3.18	$23.18
Electrician - Licensed	$27.77	$13.76	$41.53	Roller Operator - Pavement	$17.00	$1.17	$18.17
Electrician Helper/Cable Puller (Licensed)	$16.39	$3.23	$19.62	Screed/Wheelman	$17.00	$4.32	$21.32
Excavator Operator	$18.50	$2.40	$20.90	Stone Mason	$17.00	$0.00	$17.00
Fence Setter	$11.00	$0.00	$11.00	Truck Driver - Light	$17.00	$1.46	$18.46
Flagger	$9.00	$0.00	$9.00	Truck Driver - Medium	$17.00	$0.30	$17.30
Grader/Scraper Operator	$20.00	$4.90	$24.90	Truck Driver - Heavy	$15.00	$1.75	$16.75
Highway Worker/Guardrail Installer	$16.80	$3.56	$20.36	Truck Driver - Tractor Trailer	$15.00	$0.53	$15.53
Hot Top Plant Operator	$20.75	$10.84	$31.59	Truck Driver - Mixer (Cement)	$13.79	$3.62	$17.41

The Laborer classifications include a wide range of work duties. Therefore, if any specific occupation to be employed on this project is not listed in this determination, call the Bureau of Labor Standards at the above number for further clarification.

Welders are classified in the trade to which the welding is incidental.

Apprentices - The minimum wage rate for registered apprentices are those set forth in the standards and policies of the Maine State Apprenticeship and Training Council for approved apprenticeship programs.

Posting of Schedule - Posting of this schedule is required in accordance with 26 MRSA §1301 et. seq., by any contractor holding a State contract for construction valued at $50,000 or more and any subcontractors to such a contractor.

Appeal - Any person affected by the determination of these rates may appeal to the Commissioner of Labor by filing a written notice with the Commissioner stating the specific grounds of the objection within ten (10) days from the filing of these rates with the Secretary of State.

Determination No: HI-125-2015

Filing Date: August 31, 2015

Expiration Date: 12-31-2015

A true copy

Attest: Pamela Megathlin

Pamela D Megathlin
Director
Bureau of Labor Standards

BLS 424HI (R2015) (Highway & Earthwork York)

THIS DOCUMENT MUST BE CLEARLY POSTED AT THE PERTAINING STATE FUNDED PREVAILING WAGE CONSTRUCTION SITE

State of Maine
Department of Labor
Bureau of Labor Standards
Wage and Hour Division
Augusta, Maine 04333-0045
Telephone (207) 623-7906

Wage Determination - In accordance with 26 MRSA §1301 et. seq., this is a determination by the Bureau of Labor Standards, of the fair minimum wage rate to be paid laborers and workers employed on the below titled project.

Title of Project --------Contract 2015.12-Interchange 32,36 & 46 NB Toll System Upgrades

Location of Project –Biddeford & Saco, York County

2015 Fair Minimum Wage Rates
Heavy & Bridge York County

Occupation Title	Minimum Wage	Minimum Benefit	Total	Occupation Title	Minimum Wage	Minimum Benefit	Total
Asphalt Raker	$14.00	$0.00	$14.00	Line Erector - Power/Cable Splicer	$28.50	$7.70	$36.20
Backhoe Loader Operator	$18.00	$2.23	$20.23	Loader Operator - Front-End	$17.50	$3.02	$20.52
Bulldozer Operator	$18.00	$2.77	$20.77	Mechanic- Maintenance	$21.50	$3.58	$25.08
Carpenter	$22.00	$2.18	$24.18	Mechanic- Refrigeration	$22.00	$4.43	$26.43
Carpenter - Rough	$17.90	$2.67	$20.57	Millwright	$24.73	$3.42	$28.15
Cement Mason/Finisher	$16.81	$0.74	$17.55	Painter	$16.00	$0.00	$16.00
Communication Equip Installer	$23.57	$5.63	$29.20	Pile Driver Operator	$22.52	$4.06	$26.58
Comm Transmission Erector-Microwave & Cell	$18.00	$2.92	$20.92	Pipe/Steam/Sprinkler Fitter	$21.50	$4.30	$25.80
Crane Operator <15 Tons	$25.00	$1.45	$26.45	Pipelayer	$23.06	$9.55	$32.61
Crane Operator =>15 Tons)	$24.35	$2.25	$26.60	Plumber (Licensed)	$24.00	$3.63	$27.63
Crusher Plant Operator	$18.65	$3.62	$22.27	Plumber Helper/Trainee (Licensed)	$17.88	$2.39	$20.27
Diver	$23.00	$8.25	$31.25	Propane & Natural Gas Servicer & Inst	$24.00	$3.13	$27.13
Driller - Rock	$17.50	$4.86	$22.36	Pump Installer	$22.00	$2.70	$24.70
Earth Auger Operator	$22.50	$10.46	$32.96	Reclaimer Operator	$20.75	$10.84	$31.59
Electrician - Licensed	$28.00	$14.20	$42.20	Rigger	$20.00	$3.18	$23.18
Electrician Helper/Cable Puller (Licensed)	$17.50	$8.16	$25.66	Roller Operator - Earth	$12.50	$4.76	$17.26
Excavator Operator	$21.05	$3.52	$24.57	Roller Operator - Pavement	$18.75	$5.25	$24.00
Fence Setter	$14.00	$0.00	$14.00	Screed/Wheelman	$17.00	$3.42	$20.42
Flagger	$9.00	$0.00	$9.00	Track Moving Machine Operator	$17.71	$4.08	$21.79
Ironworker - Reinforcing	$20.00	$1.23	$21.23	Truck Driver - Light	$17.00	$1.46	$18.46
Ironworker - Structural	$23.70	$1.36	$25.06	Truck Driver - Medium	$12.25	$0.93	$13.18
Laborers (Incl.Helpers & Tenders)	$15.00	$1.04	$16.04	Truck Driver - Heavy	$15.94	$2.34	$18.28
Laborer - Skilled	$17.69	$2.79	$20.48	Truck Driver - Tractor Trailer	$20.50	$2.85	$23.35

The Laborer classifications include a wide range of work duties. Therefore, if any specific occupation to be employed on this project is not listed in this determination, call the Bureau of Labor Standards at the above number for further clarification.

Welders are classified in the trade to which the welding is incidental.

Apprentices - The minimum wage rate for registered apprentices are those set forth in the standards and policies of the Maine State Apprenticeship and Training Council for approved apprenticeship programs.

Posting of Schedule - Posting of this schedule is required in accordance with 26 MRSA §1301 et. seq., by any contractor holding a State contract for construction valued at $50,000 or more and any subcontractors to such a contractor.

Appeal - Any person affected by the determination of these rates may appeal to the Commissioner of Labor by filing a written notice with the Commissioner stating the specific grounds of the objection within ten (10) days from the filing of these rates with the Secretary of State.

Determination No: HB-023-2015

Filing Date: August 31, 2015

Expiration Date: 12-31-2015

A true copy

Attest: Pamela Megathlin
Pamela D Megathlin
Director
Bureau of Labor Standards

BLS 424HB (R2015) (Heavy & Bridge York)

104.4.4 Request for Information (RFI)

This Subsection is amended by the addition of the following:

RFI's shall be submitted on company letterhead or on a standard company form with a tracking number. The General Contractor shall maintain a corresponding RFI log.

RFI's may be attached to an e-mail, but shall not be in the form of an e-mail, and at a minimum, must reference the subject Plan or Specification in question.

RFI's with multiple questions may be treated as a submittal and the allowed 21 calendar days for review and response will govern.

104.4.6 Utility Coordination

This Subsection is amended by the addition of the following:

These Special Provisions outline the arrangements which have been established by the Authority for coordination of the work to be accomplished by the utilities. The scope and schedule of utility relocation work is noted herein. The Contractor shall plan and conduct his work accordingly.

General

Utility working days are Monday through Friday, conditions permitting. Times are estimated on the basis of a single crew for each utility. Any times and dates mentioned are estimates only and are dependent upon favorable weather, working conditions, and freedom from emergencies. The Contractor shall have no claim against the Authority if they are exceeded.

The Contractor must comply with all OSHA regulations pertaining to work adjacent to utility wires. The Contractor shall plan and conduct his work accordingly.

Existing utilities at the site include Maine Turnpike Authority. The Authority will be responsible for contracting Dig Smart to locate their facilities.

104.4.6.1 Temporary Utilities

The Contractor will be required to maintain all services and utilities to the existing facility throughout construction of the new Toll Lanes or rehabilitation of existing. Existing services and utilities include, but are not necessarily limited to, power, telephone, water, sewer, propane, heat and site lighting. The Contractor shall be responsible for all temporary connections, service runs, relocations, disconnections, reconnections, etc. required to maintain these services due to phasing of construction and constraints of the site and work area.

Prior to the start of construction, the Contractor shall submit a plan and schedule for maintaining existing services and utilities. The plan shall identify all proposed temporary connections, service runs, relocations, disconnections, reconnections, etc. and shall reflect construction phasing and the Contractor's proposed sequence of work. Maintaining existing services and utilities and all temporary utility work, including proposed temporary connections,

service runs, relocations, disconnections, reconnections, etc. shall be incidental to Item 800.30 - Toll Plaza Demolition and Restoration.

104.4.7 Cooperation With Other Contractors

The Maine Turnpike will have the following adjacent work during this Contract:

2014.13 Piscataqua River Bridges
2015.01 Pavement Rehabilitation, Guardrail and Clear Zone Improvements
2015.09 Interchange 53 Toll System Upgrades
2015.13 Interchange 52 ORT
2016.01 Paving MM 54.5 to 64.4
2016.02 Interchange 63 Interchange Improvements

This Subsection is amended by the addition of the following:

Simultaneous work by the System Integrator (SI) during the Contractor's work is specifically related to installation of toll equipment and testing of completed installation in work areas adjacent to where the Contractor will be working. The Contractor's work precedes testing such that work (if necessary) by the Contractor after the completion of testing in these areas is limited to final surface paving to be coordinated with any final testing activities if testing is not complete at the time of final paving.

The following Subsection is added:

105.2.4.2 Lead Paint

The Contractor shall note that the existing structure may contain lead based paint. The Contractor shall institute every precaution when working with materials coated with lead based paints.

Lead Paint Removal

The Contractor is required to remove and dispose of lead based paint and paint residue before cutting, grinding, drilling and sandblasting existing materials in preparation of completing the work except as provided under the Drilling of Lead Based Paint subsection in this Special Provision. All lead based paint and paint residue shall be removed, handled, stored and disposed of in conformance with all local, State and Federal laws and regulations governing lead based paint. The Contractor may use his own properly trained employees to abate the lead based paint in accordance with applicable regulations and requirements; or he may hire a licensed lead abatement subcontractor to abate the lead based paint in accordance with applicable regulations and requirements.

The Contractor, or licensed lead abatement subcontractor, shall submit a Project specific Health and Safety (OSHA) Plan and a Hazardous Waste Management Plan (EPA/DEP) a minimum of two (2) weeks prior to undertaking the removal of lead based paint.

Drilling of Lead Based Paint

The Contractor may drill lead based painted steel, without lead based paint removal, provided the Contractor collects and recycles the drill cuttings at a licensed metal recycling facility. If the Contractor chooses not to collect and recycle the drill cuttings at a licensed metal recycling facility he will be required to abate the area where drilling is to occur in full accordance with the lead based paint removal, storage and disposal requirement of this Special Provision.

The Authority will require a signed statement from the Contractor stating the drill cuttings were collected and recycled at a licensed metal recycling facility and the name the recycling facility.

Health and Safety Plan

The Health and Safety Plan submittal shall describe how the Contractor/licensed lead abatement subcontractor intends to remove the lead based paints; and shall outline how the Contractor/licensed lead abatement subcontractor will adhere to all Federal, State and local ordinances which govern worker (including authorized representatives of the Authority) exposure to lead based paints, and ensure the safety of the workers performing lead removal. Copies of current worker training certificates (OSHA), medical screenings, and respirator fit up shall be included in the submittal.

Hazardous Waste Management Plan

The Hazardous Waste Management Plan submittal shall describe how the Contractor/licensed lead abatement subcontractor intends to manage the hazardous waste that will be generated, temporarily accumulated, stored, transported off-site and disposed; adhere to ordinances associated with the management of hazardous wastes; and ensure protection of the environment.

The Hazardous Waste Management Plan shall:

- Be signed by the Contractor;
- State whether the Contractor or licensed lead abatement subcontractor will be undertaking the work; and,
- State whether abated lead materials will be accumulated and stored on-site (required if the Contractor is not licensed by DEP/EPA to transport and temporarily store lead based hazardous waste), or be removed in HEPA vacuums daily to the removal Contractor's licensed waste storage facility (permitted only if the Contractor is licensed by DEP/EPA to transport and temporarily store lead based hazardous waste).

If abated lead materials are to be accumulated and stored on-site, the Hazardous Waste Management Plan shall include (at a minimum) the following:

- Container size and labeling standards:
  - Containers must be 55 gallons or less
  - Containers must have the labeled "HAZARDOUS WASTE"

- Accumulation requirements:
  - Labels will include accumulation start date and container full date
  - On-site storage will not exceed 180 days from full date
  - Total on-site storage shall not exceed 55 gallons or 220 pounds

- Inspections (including frequency and checklist):
  - Inspections shall be performed each day the Contractor works
  - Inspection checklist shall be similar to MaineDEP format (Refer to Appendix A1 of MaineDEP Handbook for Hazardous Waste Generators – January 2003)

- Transport and DOT "pre-transport requirements":
  - Specify the licensed hazardous waste transporter to be used
  - Obtain Generator's EPA ID No. (typically a provisional ID # is obtained through the licensed hazardous waste transporter)
  - USDOT – approved containers must be used for shipment
  - Schedule the Authority for signing Hazard Waste Manifest

- Recordkeeping requirements:
  - Describe where at the jobsite the required records (e.g., inspection logs, training records, Lead Determination report/hazardous waste characterization, etc.) will be maintained
  - Describe how and when copies of the required documents specified above will be transferred to the Authority's Environmental Services Coordinator's office

The Contractor/licensed lead abatement subcontractor, shall provide documentation to the Authority that the employees who will be removing, handling, managing and/or directly supervising the hazardous waste operations have received required Resource Conservation and Recovery Act (RCRA) hazardous waste management training, and all training is current.

The lead based hazardous waste must remain on-site, unless the removal is being performed by a licensed lead abatement subcontractor that collects the paint residue in HEPA vacuums and is licensed by DEP/EPA to transport and temporarily store lead based hazardous waste at the removal Contractor's licensed waste storage facility. Both on-site and licensed off-site lead based hazardous waste storage facilities require secure storage and daily inspection of the stored waste.

If the removal Contractor is not licensed by DEP/EPA to transport and temporarily store lead based hazardous waste off-site, then an EPA licensed Hazardous Waste transporter(s) shall be used to remove hazardous waste from the site. All removal and disposal documentation will be required when the hazardous waste leaves the site. As the Generator, only the Authority's Environmental Services Coordinator or his trained designee shall sign waste manifests when material is removed from the Project site.

The removal, storage, handling, transporting, and disposal of lead based paint and lead based paint residue will not be measured separately for payment, but shall be incidental to the various Contract work items.

The following Subsection is added:

105.2.4.3 Asbestos

The Contractor shall note that the existing structure(s) have undergone Asbestos Containing Material Determination Survey(s), and have tested positive for asbestos containing materials. A copy of the Asbestos Containing Determination Survey report is attached as **Appendix B**. The removal and disposal of the asbestos containing materials is specified in Special Provision 202, Removing Structure and Obstructions (Removing Asbestos Containing Materials).

Whereas no Asbestos Containing Material Determination Survey is 100 percent accurate, building demolition activities shall be accomplished under the supervision of a "competent person", as defined by OSHA, to evaluate whether materials uncovered/exposed are asbestos containing materials. If the "competent person" observes, or believes he has observed, asbestos containing materials while demolition is underway, the “competent person” shall immediately stop the demolition, secure the site and notify the Project Resident/Inspector.

The Owner shall have the area sampled and analyzed for asbestos containing materials. No work will be permitted in the area until samples show that no asbestos containing materials exists, or if asbestos containing materials are present, the conditions are abated. Compensation for delays resulting from stopping the demolition, testing for asbestos containing materials, and abating asbestos containing materials, if they exist, shall be limited to a time extension.

The following Subsection is added:

105.2.4.4 Smoking Policy

The Maine Turnpike Authority has a smoking policy in effect for all toll plazas. Smoking is prohibited on or around all buildings, toll booths, toll booth abutments and travel lanes. In addition, smoking is prohibited within 50 feet of propane. The Contractor will follow the current Authority policy regarding smoking at or around the toll plaza and existing utility building.

105.2.4.5 Universal Waste

The Maine Turnpike Authority shall be responsible for the removal of universal waste items required in coordination with the demolition work required by the Contractor.

Prior to the commencement of the building demolition, the Contractor shall coordinate with the Resident and Authority to identify the timing of when universal waste removal will be required. Contractor should anticipate up to two days of schedule for the Authority to perform this work in advanced of associated demolition.

105.3 Traffic Control and Management

See Special Provision Section 526, Concrete Barrier.

See Special Provision Section 652, Maintenance of Traffic.

105.4.3 Maintenance During Winter Construction

This Subsection is amended by the addition of the following:

The Contractor is responsible for the maintenance of erosion control and traffic control devices. The Authority will be responsible for winter road maintenance for lanes open to traffic. The Authority will also be responsible for winter road maintenance after Substantial Completion.

The Contractor is also responsible for snow and ice removal from all drainage paths and catch basins located behind traffic control devices, in order to maintain drainage away from the paved travel way.

105.5.1 General Requirements

Construction Access

The Contractor shall construct a stabilized construction entrance in accordance with the Best Management Practices at all locations where construction vehicles will exit and/or enter existing paved shoulders or travel ways from non-paved areas. The Resident shall approve of the locations. Additional stabilized construction entrances may be required due to the Contractor's operations as well as site conditions. The construction and maintenance of the stabilized construction entrance including frequent sweeping of the paved surfaces shall be incidental to the Contract.

105.7.4 Submittal Requirements

The following paragraph is added:

In addition to the hardcopy requirement, the Contractor shall also make submittals in PDF electronic file format via email. Submittals shall be accompanied by a cover sheet, which identifies the submittal number, subject date, and any revision numbers associated with the submittal.

105.8.1 Temporary Soil Erosion and Water Pollution Control

This Subsection in the General Provisions is deleted and replaced with the following:

The Contractor shall certify in writing to the Resident that an On-Site Responsible Party (OSRP) has been trained and is knowledgeable in erosion and sediment control (ECS) through the MaineDEP's Non-Point Source Training Center, or an equivalent program, or is licensed in the State of Maine as a Professional Engineer, Landscape Architect or Soil Scientist. Proof of certification for the OSRP, and any other Contractor employees charged with conducting ESC inspections, must be submitted to the Authority's Environmental Coordinator prior to starting work.

Spill Prevention Control and Countermeasure (SPCC) Plan

Any areas where petroleum products, oils or non-petroleum hazardous materials are handled or stored will require a Spill Prevention Control and Countermeasure (SPCC) Plan. These materials may not be stored or handled in areas of the site draining to an infiltration area. The Plan will be submitted to the Resident before construction begins. In addition to petroleum products and hazardous materials, controls must be used to prevent additional pollutants (i.e., fertilizers, pesticides, salt/brine, litter, construction demolition debris, etc.) from being discharged from materials on-site, including storage practices, to minimize exposure of the materials to stormwater, and appropriate spill prevention, containment, and response planning and implementation. The Plan shall provide the following information at a minimum:

1. The name and emergency response numbers (telephone number, cellular phone and pager numbers, if applicable) of the Contractor's representative responsible for spill prevention and response;

2. Description of handling or storage location noting setbacks from water bodies where relevant. Significant sand and gravel aquifers and other sensitive resources, including infiltration areas, must be avoided wherever possible;

3. Description of storage and containment facilities, such as dikes, berms, sumps, and other forms of secondary containment that prevent discharge to groundwater or surface water;

4. Description of equipment and/or materials used to prevent discharges (including sorbent materials);

5. Preventative measures to minimize the possibility of a spill; and,

6. Contingency plan if spill should occur.

The approved plan must be posted at the Project site. All personnel working in the area are required to read and be familiar with the plan.

There shall be no separate payment for preparation of a SPCC Plan acceptable to the Resident and preparation shall be incidental to the work.

Notification of Authority of Hazardous Material Spills

In addition to MaineDEP reporting requirements for spills greater than five (5) gallons, the Contractor shall notify the on-site Resident Inspector. The on-site Resident Inspector shall notify the Maine Turnpike Radio Room at 207-871-7701. When the on-site Resident Inspector is not available, the Contractor shall notify the Maine Turnpike Radio Room directly at 207-871-7701.

In addition to MaineDEP reporting requirements for all spills where any stream or water body is threatened, the Contractor shall notify the on-site Resident Inspector. The on-site Resident Inspector shall notify the Maine Turnpike Radio Room at 207-871-7701. When the on-site Resident Inspector is not available, the Contractor shall notify the Maine Turnpike Radio Room directly at 207-871-7701.

These notification procedures shall be incorporated into the Spill Prevention Control and Countermeasure (SPCC) Plan.

Responsibility for Control and Cleanup of Hazardous Material Spills

The Contractor shall be responsible to control spills and properly cleanup, containerize, and dispose of petroleum and/or other hazardous material waste that results from the actions and/or equipment of the Contractor or his employees, subcontractors and suppliers. Chemicals, exposed to stormwater must be prevented from becoming a pollutant source.

The Contractor shall also be responsible for all direct and indirect costs associated with the control of spills and proper cleanup, containerization, and disposal of petroleum and/or other hazardous material waste that results from the actions and/or equipment of the Contractor or his employees, subcontractors and suppliers.

The following Subsections are added:

105.8.1.1 Environmental Standards

The Project will be performed in accordance with the MaineDOT Best Management Practices (BMP) latest issue. The Contractor shall fully comply with all erosion and sedimentation control requirements outlined in the BMP's or contained herein. Non-compliance with these requirements as determined by the Resident shall result in a financial penalty of $1,000 per day, per violation. Any fines assessed to the Maine Turnpike Authority as a result of the Contractor's non-compliance shall be paid by the Contractor. If the Contractor fails to pay, the cost of the fine will be deducted from monies due, or which may become due, to the Contractor under this Contract.

In the event of conflict between these Specifications and other erosion and pollution control laws, rules or regulations of other Federal, State and local agencies, the more restrictive law, rules or regulations shall apply.

The standards as described below shall be met on the Project:

105.8.1.11 Water Pollution Control Requirements

(a) General

1. The Contractor must comply with the applicable Federal, State and local laws and regulations relating to prevention and abatement of water pollution.
2. Except as allowed by an approved permit or otherwise authorized by the Authority in writing, pollutants containing construction debris including excavated material, aggregate, residue from cleaning, sandblasting or painting, cement mixtures, chemicals, fuels, lubricants, bitumens, raw sewage, wood chips, and other debris shall not be discharged into water bodies, wetlands or natural or manmade channels leading thereto and such materials shall not be located alongside water bodies, wetlands, or such channels such that it will be washed away by high water runoff. Furthermore, liquid petroleum products and other hazardous materials with the potential to contaminate groundwater

may not be stored or handled in the areas of the site draining to an infiltration area, unless these portions of the site (where storage and handling of these materials) are isolated using dikes, berms, sumps and other forms of secondary containment that prevent discharge to groundwater.

3. Temporary winter stabilization must be used between November 1st and April 15th or outside of said time period if the ground is frozen or snow covered. Temporary winter stabilization involves, at a minimum, covering all disturbed soils and seeded ground that is not Acceptable Work with an approved method. Use of these methods for over-winter temporary erosion control will be paid for under the appropriate Erosion Control items included in the Contract.
4. Construction operations in water bodies or wetlands shall be restricted to the construction limits shown on the Plans and to those areas that must be entered for the construction of temporary or permanent structures, except as allowed by approved permit or otherwise authorized by the Authority in writing. Mechanized equipment shall not be operated in water bodies or wetlands except as allowed by approved permit or otherwise authorized by the Authority in writing.
5. Upon completion of the work, water bodies or wetlands shall be promptly cleared of all falsework, piling, debris or other obstructions caused by the construction operations, except as allowed by approved permit or otherwise authorized by the Authority in writing.

(b) Earthwork

If earthwork disturbance is part of the Project scope:

1. Newly disturbed earth shall be mulched or otherwise stabilized by the end of each workday. Mulch shall be maintained on a daily basis.
2. All disturbed ditches shall be stabilized by the end of each workday. Stabilization shall be maintained on a daily basis.
3. Erosion control blanket shall be installed in the bottom of all ditches except where a stone lining is planned. Seed shall be applied prior to the placement of the blanket.
4. Permanent slope stabilization measures shall be applied within one (1) week of the last soil disturbance. Newly seeded or sodded areas must be protected from vehicle traffic, excessive pedestrian traffic, and concentrated runoff until the vegetation is well-established. If necessary, areas must be reworked and restabilized if germination is sparse, plant coverage is spotty, or topsoil erosion is evident.
5. Dust control items, other than those under Standard Specification Section 637, Dust Control, if applicable, shall be included in the plan.

105.8.1.12 Construction Requirements

1. The Contractor, to the maximum extent practicable, shall install temporary and permanent sedimentation control measures prior to conducting clearing and grubbing operations.

2. The Contractor shall conduct inspections of disturbed and impervious areas, erosion control measures, materials storage areas that are exposed to precipitation, and locations where vehicles enter or exit the site. Inspections shall be conducted: (1) at least once a week as well as before and after a storm event and prior to completing permanent stabilization measures; and (2) by a person knowledgeable of erosion and stormwater control, including the standards and conditions in the permit.
3. The Contractor shall maintain all measures in effective operating condition until areas are permanently stabilized. If BMPs need to be modified (i.e., corrective action, additional BMPs installed, etc.), implementation must be completed within seven (7) calendar days and prior to any storm event.
4. Temporary erosion control measures shall be maintained until the site is permanently stabilized with vegetation or other permanent control measures.
5. The Contractor will immediately take appropriate measures to prevent erosion or sedimentation from occurring or to correct any existing problems regardless of the time of year.
6. During periods of approved suspension, the Contractor shall inspect and maintain temporary and permanent erosion and sedimentation controls.
7. Work in wetlands is prohibited except to the minimum extent necessary for completion of the work as detailed on the Plans. Excavated and other material shall not be stockpiled in wetlands. Haybales, silt fence or other suitable barriers shall be used, where necessary, to prevent sedimentation from eroding materials.
8. Disturbance of natural resources beyond the construction limits shown on the Plans is not allowed.
9. Existing ditches shall be maintained until the new ditches are stabilized. Stone check dams shall be placed in existing ditches prior to construction as to prevent the release of sedimentation. Stone check dams shall be installed at the outlets of all existing and proposed ditches adjacent to all stream and wetlands.
10. For proposed ditches, stabilize the outlet first and build from the bottom up. Only excavate what can be stabilized or protected by the end of the work day.
11. Before permitting permanent channels to carry water, they shall be stabilized. This may require the installation of temporary erosion control BMP's or temporarily diverting flows.
12. All cross culvert outlets shall be armored before the end of the work day.
13. The Contractor's operation may require the placement of temporary pipes and fill over a ditch line to provide access to the work area. The Resident shall approve the size of the pipe. The placement and removal of the temporary access shall not be measured for payment and shall be incidental to the Excavation item.
14. Bare earth slopes shall be roughened to dissipate sheet flow. This shall be accomplished by "tracking" the slope perpendicular to the centerline. This work will not be measured separately for payment, but shall be incidental to the Excavation item.
15. Uncured concrete shall not be placed directly into the water body. Concrete may be placed in forms and shall cure at least one (1) week prior to form removal. No washing of tools, forms, etc. shall occur in or adjacent to the water body or wetland.
16. The Contractor shall contain all demolition debris (including debris from wearing surface removal, sawcut slurry, dust, etc.) and shall not allow it to discharge to any resource. Litter, construction debris, and chemicals exposed to stormwater must be prevented from becoming a pollutant source. The Contractor shall dispose of debris

in accordance with Maine Solid Waste Law, Title 38 M.R.S.A., Section 1301 et. seq.

17. No wheeled or tracked equipment shall be operated in the water. Equipment operating on the shore may reach into the water with a bucket or similar extension. Equipment may NOT cross streams.
18. The Contractor shall not remove rocks from below the normal high water line of any wetland, great pond, river, stream or brook, except to the extent necessary for completion of the work and as allowed by environmental permits.

105.8.2 Permit Requirements

The Contractor shall prepare a LOD plan illustrating the Contractor's proposed limit of earthwork disturbance. The LOD plan shall show all construction access locations, field office locations, material and temporary waste storage locations, as well as include the Contract limits of earthwork disturbance. All applicable erosion and sedimentation control devices needed shall be detailed on the Contractor's LOD plan and are not limited to those devices shown on the Contract LOD plan. **This Plan shall be submitted for review and approval, to the Resident within 14 days of Contract award.** Payment for creating, revising, and completing this plan shall be incidental to Item 659.10, Mobilization.

The LOD for this Contract has been estimated to be **2.77** acres.

At any time during the Contract, if the Limit of Disturbance needs to be adjusted to accommodate construction activities, the Contractor shall resubmit the LOD plan (including any additional erosion and sedimentation control measures needed) to the Resident for review and approval prior to any additional disturbance taking place:

- If the cumulative area of disturbance exceeds the estimated LOD noted above, for a total less than one acre, the Resident shall have a minimum of five (5) working days to approve the revised LOD plan.
- If the cumulative area of disturbance exceeds one acre, the Resident shall first approve of the plan and then submit a MPDES Construction General Permit NOI for MaineDEP approval. The approval will take a minimum of 14 working days.

Compliance with the erosion and sedimentation control requirements outlined in this Contract is required by the Contractor.

This Project is also subject to the requirements of the Maine Pollutant Discharge and Elimination System (MPDES) General Permit for the Discharge of Stormwater from MTA's Municipal Separate Storm Sewer Systems (MS4), because it is located within an Urbanized Area (UA) as defined by the 2000 census by the U.S. Bureau of the Census. MS4 compliance requires all Contractors to be properly trained in Erosion and Sedimentation Control (ESC) measures (as per Special Provision Subsections 105.8.1 and 656.07) and implement measures to reduce pollutants in stormwater runoff from construction activities.

107.1 Contract Time and Contract Completion Date

This Subsection is amended by the addition of the following:

The Contract start date will be October 26, 2015 and all work shall be completed on or before June 1, 2018. The Project shall be substantially complete by December 1, 2017.

107.1.1 Substantial Completion

This Subsection is amended by the addition of the following:

Substantially complete shall be defined by the Authority as the following:

- All site work, including all grading, sidewalks and slabs, plantings, flagpole, and utility work, has been completed.
- Demolition and replacement of roadway slabs is complete.
- Removal and installation of identified tolling equipment, and associated cabling, wiring, conduit and all other materials, and incidentals.
- Acceptance of concrete and electrical/data work.
- A punch list has been issued and all punch list work, excluding acceptance of grass, has been completed.

Supplemental Liquidated damages on a calendar day basis in accordance with Subsection 107.7.2 shall be assessed for each calendar day that substantial completion is not achieved. Supplemental Liquidated damages for substantial completion will end when substantial completion is accepted by the Resident. If the work remains incomplete at the Contract Completion Date, liquidated damages on a calendar day basis in accordance with Subsection 107.7.2 shall be assessed for each calendar day that Contract completion is not achieved. If substantial completion is not completed by the Contract Completion date both supplemental liquated damages and liquated damages will be incurred.

107.3.2 Night Work

The Contractor shall be responsible to determine and adhere to the local regulations pertaining to night work time restrictions and noise limitations. The Contractor shall plan his work accordingly.

No person shall engage in, cause or permit to be engaged in, very loud construction activities on a site abutting any residential use between the hours of 10:00 p.m. one day and 7:00 a.m. of the following day.

107.4.2 Schedule of Work Required

This Subsection is amended by the addition of the following:

The work shall be completed in logical timely increments. The Contractor shall submit a schedule for review that shows large segments of work scheduled for continuous blocks of time. Work in a segment shall be completed over a period of continuous work days. Work shall not be started in an area until the Contractor has scheduled the labor and equipment necessary to

complete all work in the segment. The Contractor will not be permitted to "stretch" the Project over the entire Contract period, doing a day or two work per week.

A schedule that shows sporadic work activities through the duration of the Contract will not be approved. Actual work activities that are sporadic will not be allowed.

A two (2) week schedule shall be submitted by the Contractor weekly, the first week shall be detailed. The weekly detailed schedule shall show all lane closures that are anticipated for the following week. Lane closures that are not shown on this schedule will only be allowed if they are deemed emergency lane closures by the Resident.

The following Subsection is added:

107.4.6 Prosecution of Work

The following is a summary of the Construction Phases and the key dates:

Interchange 32 - Biddeford:

New Roadway Construction - Widening of approach and departure side to the north of the plaza between the existing wide load lane (Lane 5) and the new toll utility building in order to construct a new toll lane (Lane 7 – New wide load lane). The widening of the departure side of the plaza will include both the northbound and southbound ramps. The northbound ramp will be widened and striped for two lanes; the southbound ramp will be widened, but will remain a single lane.

New Lane Construction - The new toll lane (Lane 7 – New wide load lane) shall be constructed and operational prior to any other entry or exit lane work starting, and prior to exist canopy raising.

Existing Canopy Raising – The canopy over the existing entering lanes will be raised by two feet, this work will not start until the new entry lane is complete and operational. The contractor will have one Friday night from 8:00 PM to 6:00 AM the following Saturday morning to complete the raising of the canopy.

Exit Toll Lane Reconstruction – Entry toll lane 3 shall be temporarily converted to an exit lane prior to starting the exit lane work. The placement of concrete for Exit Lane 1 and 6 shall be done at night and closing of Exit Lane 2 will be allowed with the routing of exiting traffic through temporary exit lane.

Interchange 36 - Saco:

Entry Toll Lane Reconstruction – New entry toll lane work shall be complete prior to starting exit lane work.

Exit Toll Lane Reconstruction – Entry toll lane 3 shall be temporarily converted to an exit lane prior to starting the exit lane work. The placement of concrete for Exit Lane 1 shall be done at night and closing of Exit Lane 2 will be allowed with the routing of exiting traffic through temporary exit lane.

Interchange 46 - JetPort:

New Lane Construction - The new toll lane (Lane 9 – New wide load lane) shall be constructed and operational prior to any other entry lane work starting.

107.4.7 Limitations of Operations

Once work commences on any entering wide load lanes it shall proceed expeditiously until completed. No work shutdown will be allowed.

Milling and paving operations shall take place at night between the hours of 10:00 PM and 6:00 AM.

Excavation material shall not be stockpiled on site. This is includes but not limited to; concrete rubble, pavement and gravel.

Wide loads will be allowed to pass through the Project area during daylight hours as authorized by the Authority unless otherwise stated within the contract documents. Wide loads are restricted from moving on the turnpike from a half hour after sunset until a half hour before sunrise. Wide loads must be able to safely pass all daytime work areas.

The Contractor will be allowed to mill the entire work area prior to beginning the paving operation in the work area provided the milled areas can be surfaced within two weeks. Temporary ramps shall be installed if the milling and paving operation do not occur in the same closure(s). Temporary bituminous ramps, incidental to paving operations, shall be a minimum 35 feet per two inches of pavement elevation change and will be required at all butt joints. The Contractor shall submit his milling and paving schedule for review and acceptance.

The Contractor shall limit the construction operations such that temporary pavement markings or pavement markers are applied daily prior to the roadway being open to traffic.

Care shall be taken when working near catch basins to ensure foreign material and contaminants do not enter the basin. If foreign material and/or contaminants enter the basin, it shall be removed prior to the material exiting the basin into a waterway. Removal shall be completed to the satisfaction of the Resident and payment shall be incidental to the Contract.

The Contractor shall submit his proposed staging and storage areas for approval by the Resident. All stored equipment must be outside of the clear zone. Proposed equipment storage locations shall be selected based on (1) proximity to UIS/Protected Natural Resources; (2) minimizing rutting or other actions that may hinder sheet flow from roadway; and (3) spill control and prevention, in the event of a fluid release from the equipment.

There shall be no H-pile or sheet pile driving during non-daylight hours. Pile driving will not be allowed within 10 feet of traffic.

Toll Plaza Limitations

Interchanges 32 and 36 cannot both have wide load restriction entering at the same time or exiting at the same time.

Interchange 32 – Only one entry or exit toll lane will be closed at a time during daylight hours and the new entry toll lane shall be complete and operational prior to any other lane being closed, and prior to starting any canopy raising operations.

Interchange 32 – New entry lane construction shall not start until spring of 2016, and once started shall not be interrupted until complete.

Interchange 32 – Exit lane work will not be allowed during July or August.

Interchange 32 – Existing canopy raising shall be completed in one night, unless a temporary support plan has been submitted and approved by the MTA. The contractor will have one Friday night from 8:00 PM to 6:00 AM the following Saturday morning to complete the raising of the canopy. A lane rental fee $5,000 for the first 15 minutes and every 15 minutes or portion thereof until the lanes are open, will be assessed for failing to opening the remaining entering lanes on time.

Interchange 36 – Only one entry or exit toll lane will be closed at a time during daylight hours, unless otherwise approved by the MTA

Interchange 46 – Only one entry toll lane will be closed at a time during daylight hours and the new entry toll lane shall be complete and operational prior to any other lane being closed.

The following Subsection is added:

107.4.9 Failure to Stop Work When Directed

In the event the Authority determines that the safety of the turnpike users (public) might be unduly compromised if work on the Project is not halted; the Resident Engineer, Resident Inspector or other authorized Authority representative will notify the Contractor to stop work. This may include directives to the Contractor to remove lane closures due to significant traffic delays. If the Contractor refuses to stop work within the time frame determined by the Authority, the Contractor will not be allowed to recommence work until after the Contractor meets with the Authority. In addition, work completed after the time allotted by the Authority to stop work will not be measured for payment.

107.7.2 Schedule of Liquidated Damages

The table of liquidated damages is deleted and replaced with the following:

Original Contract Amount From More Than	Original Contract Amount up to and Including	Amount of Liquidated Damages per Calendar
$0	$100,000	$225
$100,000	$300,000	$350
$300,000	$500,000	$475
$500,000	$1,000,000	$675
$1,000,000	$2,000,000	$900
$2,000,000	$4,000,000	$1,000
$4,000,000	and more	$2,100

108.4 Payment for Materials Obtained and Stored

This Subsection in the General Provisions is deleted and not replaced.

This Subsection of the Standard Specifications is deleted and replaced with the following:

Acting upon a request from the Contractor, accompanied by the required documentation, the Authority will pay for all or part of the value of acceptable, non-perishable Materials that are to be incorporated in the Work, including Materials that are to be incorporated into the Work not delivered on the Work site, and stored at places acceptable to the Authority (e.g. at a facility controlled by the Contractor or his Subcontractor\Fabricator). Examples of such Materials include steel piles, structural steel, prestressed concrete beams and slabs, stone masonry, curbing, timber and lumber, metal culverts, and other similar Materials. The Authority will not make payment on living or perishable Materials until acceptably planted in their final locations.

For structural steel fabrication, the Authority will not make partial payments for expenses such as shop drawing development, overhead, transportation, rent, storage, heat, Contractor mark-ups or other items until after fabrication has commenced. Payment will be based on the Authority's determination of percent complete at the close of the period.

As a condition of payment, the Contractor or their Subcontractor\Fabricator shall provide the following:

1. Proof that all Materials are stored in a secure location acceptable to the Authority.
2. Detailed invoices from the material supplier including a summary of the Materials provided, quantities shipped and received, unit costs, taxes, transportation fees, and all other charges included in the invoice total.
3. Copies of mill certifications, or other material certifications, as required by the Specifications relevant to the Materials.
4. Right of access for the Authority, or its duly authorized agent, to inspect and quantify the Materials at the approved storage site.
5. Proof of insurance for the stored Materials. The Contractor or his Subcontractor\Fabricator shall carry insurance, equal to 100% of the replacement

value of the Materials, for all stored Materials. The Maine Turnpike Authority shall be named as an Additional Insured on the insurance policy.

If payment for Materials obtained and stored by the Contractor's Subcontractor\Fabricator is made to the Contractor, then the Contractor must provide proof of payment from his Subcontractor\Fabricator within 14 calendar days of the date the Contractor receives payment for the Materials. Failure by the Contractor to provide timely proof of payment for these Materials will result in the paid amount being withheld from the subsequent progress payment, or payments, until such time proof of payment is received by the Authority.

Materials paid for by the Authority will become the property of the Authority, but the risk of loss shall remain with the Contractor. Payment for Materials does not constitute acceptance of the Material. If Materials for which the Authority has paid are later found to be unacceptable, then the Authority may withhold amounts reflecting such unacceptable Materials from payments otherwise due the Contractor.

In the event of Default, the Authority may use, or cause to be used, all paid-for-Materials in any manner that is in the best interest of the Authority.

108.4.1 Price Adjustment for Hot Mix Asphalt

This Subsection in the General Provisions is deleted and replaced with the following:

For Contracts containing an excess of 500 tons of bituminous pavement, an asphalt price adjustment will be made for all bituminous concrete placed after the bid date of the Contract. No asphalt price adjustment will be allowed for Contracts containing less than 500 tons.

Price adjustments will be based on the variance in cost for the performance-graded binder component of the hot mix asphalt. The quantity of hot mix asphalt for each pay item will be multiplied by performance graded binder given in the table below, times the difference in price between the base price and the period price of asphalt cement. Adjustments will be made upward or downward, as prices increase or decrease. The quantity of Hot Mix Asphalt will be determined from the quantity shown on the progress estimate for each pay period. The base price of performance graded binder to be used is the price per standard ton current with the bid opening date. The period price of performance grade binder shall be determined by the Authority by using the average New England Selling Price and shall be the price per standard ton current with the ending date of the progress estimate. The Authority will determine the price adjustment weekly as prices increase or decrease and the sum of the weekly totals will be included in the monthly payment. No price adjustment will be made after the substantial completion date. The last price listed before the substantial completion will be used for pavement placed after the substantial completion date. The prices shall be determined by using the average New England Selling Price, as listed in the Asphalt Weekly Monitor.

Item 403.207	Hot Mix Asphalt - 19 mm	5.2%
Item 403.208	Hot Mix Asphalt - 12.5 mm	5.6%
Item 403.2083	Hot Mix Asphalt - 12.5 mm	5.6%
Item 403.209	Hot Mix Asphalt - 9.5 mm (sidewalks, drives, & incidentals)	6.2%

Item 403.211	Hot Mix Asphalt - Shim	6.2%
Item 403.213	Hot Mix Asphalt - 12.5 mm (base and intermediate course)	5.6%

109.7.3 Compensable Items

The following is added to Item 3.:

3. "A maximum 15% markup will be allowed on the total..."

The following is added to the end of the paragraph:

4. ..."if determined by the Authority to be lower."

SPECIAL PROVISION

SECTION 202

REMOVING STRUCTURES AND OBSTRUCTIONS

(Removing Asbestos Containing Materials)

202.01 Description

The following paragraphs are added:

The work shall also consist of removing and disposing of roof cement containing asbestos around the perimeter of the top of the plaza canopy structure roof at Interchange 32.

All asbestos containing materials shall be removed by a licensed asbestos abatement contractor prior to the roof replacement. All asbestos containing materials shall be disposed of at licensed asbestos containing material disposal sites in compliance with current EPA and Maine DEP regulations. The Contractor shall submit to the Resident the original disposal receipts acknowledging proper disposal of asbestos containing materials prior to the payment of Removing Asbestos Containing Material pay items.

All non-asbestos containing materials shall become the property of the Contractor and shall be removed from the site prior to the completion of the Project. The Contractor shall provide the Resident with an affidavit stating the final location of all disposed material and that the material was disposed of in accordance with the Maine Department of Environmental Protection Solid Waste Regulations.

The following Subsection is added:

202.021 Removing Asbestos Containing Materials

All existing roof cement around the perimeter of the canopy at Interchange 32 is assumed to contain asbestos. Should additional suspect asbestos containing materials be observed during the demolition process, the provisions of Subsection 105.2 shall apply.

A licensed asbestos abatement contractor shall properly abate and dispose of all asbestos containing materials which require removal.

No asbestos containing materials may be removed without a Maine Turnpike Authority approved removal and disposal plan; and proper notifications and filings with the Maine Department of Environmental Protection.

The General Contractor may sub-contract the removal of the Asbestos Containing Material (ACM) to a licensed asbestos abatement contractor or use his own trained and licensed personnel. The licensed asbestos abatement contractor must prepare a work plan for the removal of the ACM and submit a copy to the Resident for approval prior to commencing with the removal of ACM.

Disposal of all ACM shall comply with current EPA and Maine DEP regulations. The Contractor shall submit to the Resident the original disposal receipts acknowledging proper disposal of ACM prior to the payment of Removing Asbestos Containing Material pay items.

The licensed asbestos abatement contractor will be responsible for all work associated with the asbestos removal, including the Asbestos Removal Plan, Maine DEP Notification, demolition, final clearances, legal disposal, and Abatement Certification.

The licensed asbestos abatement contractor shall obtain any and all permits or licenses necessary for the performance of the work and shall familiarize themselves with, and conform to, all local, State and Federal laws, regulations or ordinances applicable to the work.

202.05 Method of Measurement

The first and third sentences of the first paragraph are deleted and replaced with the following:

Removing Asbestos Containing Materials will be measured as one total lump sum.

202.06 Basis of Payment

This Subsection is amended by the addition of the following:

Removing Asbestos Containing Materials will be paid for at the Contract lump sum price, The Contract lump sum price shall be full compensation for the legal removal and disposal of all asbestos containing materials, and shall include all materials, labor, tools and equipment necessary to complete this work.

Payment will be made under:

Pay Item		Pay Unit
202.071	Removing Asbestos Containing Materials	Lump Sum

SPECIAL PROVISION

SECTION 202

REMOVING STRUCTURES AND OBSTRUCTIONS

(Removing Existing Structural Concrete)

202.01 Description

The following paragraphs are added:

This work shall include removal and disposal of the existing pavement, approach slabs, and toll island slabs including bumpers and booth enclosures as shown on the Plans.

All removed concrete materials shall become the property of the Contractor and shall be removed from the site at the completion of the Project. The Contractor shall provide the Resident with an affidavit stating the final location of all disposed material and that the material was disposed of in accordance with the Maine Department of Environmental Protection Solid Waste Regulations.

Payment will be made under:

Pay Item		Pay Unit
202.17	Removing Existing Structural Concrete	Lump Sum

SPECIAL PROVISION

SECTION 202

REMOVING STRUCTURES AND OBSTRUCTIONS

(Removing Pavement Surface)

202.01 Description

The following sentence is added:

This work shall also consist of removing the surface of the bituminous pavement to the depth, width, grade, and cross section as shown on the Plans or as approved by the Resident.

The following Subsection is added:

202.061 Removing Pavement

The equipment for removing the bituminous surface shall be a power-operated milling machine or planer capable of removing the bituminous concrete pavement to the required depth. The milling machine shall be capable of accurately establishing profile grades by referencing from a floating straight edge, a minimum of 50 feet. The equipment shall also have an effective means for removing excess material from the surface and for preventing accidents from flying material in compliance with Subsection 105.2.45, Compliance with Health and Safety Laws.

All pavement grindings shall be disposed of by the Contractor off of the turnpike right-of-way in accordance with the Maine Department of Environmental Protection Solid Waste Management Requirements.

Payment will be made under:

Pay Item		Pay Unit
202.202	Removing Pavement Surface	Lump Sum

SPECIAL PROVISION

SECTION 203

EXCAVATION AND EMBANKMENT

(Rock Excavation)

203.04 General

The following paragraphs are added:

The quantity of rock excavation is approximate and based on a subsurface exploration program. The exploration locations are illustrated on the Plans. The actual limits of ledge shall be determined by probing without the removal of the overburden or by cross section after the removal of the overburden. The Contractor shall propose a method of verifying the quantities to the Resident for approval.

203.19 Basis of Payment

The following paragraphs are added:

The Contractor shall not be compensated for any additional costs associated with verifying quantities by the method approved by the Resident. The Contractor shall be compensated for the actual quantity of ledge excavated at the unit price submitted. No additional compensation will be considered if the actual ledge quantities differ from the estimated quantities.

SPECIAL PROVISION

SECTION 203

EXCAVATION AND EMBANKMENT

This Section is amended as follows:

All references to "waste storage areas" shall be deleted.

203.01 Description

The following paragraph is added:

This work shall consist of cutting, removing and disposing of the full depth of existing bituminous concrete pavement within the limits of full depth pavement excavation as shown on the Plans or as approved by the Resident. The pavement shall be sawcut to the full depth of pavement at the limits of the excavation to provide a clean, vertical cut surface.

203.04 General

The third paragraph is deleted and replaced with the following:

There are no approved waste storage areas or waste areas within the Project limits. Unsuitable materials shall be disposed of off-site in accordance with Subsection 203.06.

Any temporary earth support required to install or remove drainage structures and utilities and support existing or proposed utilities will not be measured separately for payment, but shall be incidental to the Excavation items.

All excavations shall be accomplished in accordance with the applicable OSHA Standards. The Resident reserves the right to request the Contractor to prepare an excavation plan. This plan shall include, but not necessarily be limited to, the limit and depth of excavation, side slope, shoring, trench box and utility support.

203.10 Embankment Construction - General

The thirteenth and fourteenth paragraphs are deleted and replaced with the following:

All portions of the embankment shall be compacted in accordance with the designated embankment compaction requirements specified for the Project.

The existing slopes should be benched as shown on the drawings prior to placing additional fill. Embankment fill should be placed in lifts which extend laterally beyond the limits of the design side slopes such that the specified degree of compaction is achieved within the limits of the completed embankment. The slopes should then be trimmed back to design dimensions.

203.11 Construction of Earth Embankment - Layer Method

The second, third, and fourth paragraphs are deleted and replaced with the following:

Layers shall be placed in lifts not to exceed 12 inches after compaction. Common borrow shall be compacted using vibratory compaction equipment to 92 percent of the material's maximum dry density as determined by ASTM D-1557. The compacted material shall appear firm and stable. Strict moisture control shall be utilized by the Contractor when using a cohesive fill material and the moisture content of the compacted material should not exceed four percent above the material's optimum moisture content.

The first sentence of the fourth paragraph is amended as follows:

Satisfactory compaction of granular borrow is defined as not less than 95 percent of the maximum density.

203.12 Construction of Earth Embankment with Moisture and Density Control

The last sentence of the second paragraph is amended as follows:

Each granular borrow layer placed with controlled moisture shall be compacted to not less than 95 percent of the maximum density.

The following paragraph is added:

Common borrow shall be placed in lifts not to exceed 12 inches after compaction. Common borrow shall be compacted using vibratory compaction equipment to 92 percent of the material's maximum dry density as determined by ASTM D-1557. The compacted material shall appear firm and stable. Strict moisture control shall be utilized by the Contractor when using a cohesive fill material and the moisture content of the compacted material should not exceed four percent above the material's optimum moisture content.

203.16 Winter Construction of Embankments

The word "core" is deleted from the first and second sentences in the first paragraph.

203.18 Method of Measurement

Any reference to borrow will be deleted from the first paragraph.

The pay quantity of common borrow and granular borrow shall be 115 percent of the compacted quantity measured in place.

The following sentence is added:

There will be no additional payment for the required excavation plan, and costs shall be incidental to the Excavation items.

SPECIAL PROVISION

SECTION 203

EXCAVATION AND EMBANKMENT

(Clay Borrow)

203.01 Description

The following sentence is added:

This work shall consist of the placement of clay borrow as an impermeable soil barrier within the embankment of the Stormwater Soil Filter Beds (USF Detention Basins) as shown on the Plans.

203.02 Materials

The following paragraphs are added:

Clay Borrow shall conform to the following requirements:

A. Impermeable Soil Barrier

1. Soil to be used as a barrier such as a compacted clay barrier shall consist of glaciomarine silt-clay material with a hydraulic conductivity of less than 10^{-5} (0.0001) cm/sec. Soil barrier material shall be free of organic material, debris, ice, snow, and other deleterious material, with no stone larger than one inch. Unless approved otherwise by the Resident, materials used for the impermeable soil barrier shall contain greater than 90 percent silt and clay content (minus No. 200 U.S. Std. Sieve) by dry weight, a Liquid Limit greater than or equal to 28, and a Plasticity Index greater than or equal to 11.

203.04 General

The following paragraphs are added:

The placement of the clay borrow shall conform to the following requirements:

1. Moisture Control: The workability of silt clay is acutely sensitive to moisture content. The water content of silt clay borrow used as fill shall be controlled by the Contractor to stay in the range of two percent dry of the laboratory-determined optimum water content to four percent wet of optimum water content. Silt clay not meeting this range of water contents shall be removed or reworked until the moisture content is within these limits, unless approved otherwise by the Resident.

2. Thickness: The final lift shall be a six inch compacted layer as specified on the Plans.

3. Compaction Criteria: Silt clay borrow shall be compacted to at least 95 percent of maximum dry density as determined by ASTM D698. The Contractor shall adjust the moisture content of the silt clay borrow as necessary to achieve the required degree of compaction.

4. Placement: Silt clay borrow shall be placed in continuous, approximately horizontal layers, not more than 12 inches in loose depth for material compacted by heavy construction equipment, and not more than six inches in loose depth for material compacted by hand-operated tampers. Fill material shall not be placed on surfaces that are muddy, frozen, or contain frost or ice.

   The distribution and gradation of the silt clay borrow throughout earthwork components shall be such that the fills will be free from lenses, pockets, streaks, or layers of material differing substantially in texture, gradation, or moisture from the surrounding material. The combined excavation, separation, and placement operations shall be such that the materials, when compacted, will be blended sufficiently to secure the best practicable distribution of the material.

5. Compaction: When each layer of material has been conditioned to have the specified moisture, it shall be compacted by at least four passes of the compaction equipment. The passage of compaction equipment in either direction (forward or backward) is considered a single "pass". When compacted, the density shall be essentially uniform throughout the layer. Compacted earth material having a moisture content or dry density that does not meet the criteria specified shall be reworked or re-compacted, as approved by the Resident to obtain the specified moisture content and dry density.

6. Heavy construction equipment shall not operate over the adjacent soil filter bed and underdrain system. Any damage or over compaction of these areas shall be corrected at no additional cost to the Authority.

203.18 Method of Measurement

The following sentence is added after the second paragraph:

Clay Borrow will be measured for payment by the cubic yard using the lines, grades and dimensions shown on the Plans.

203.19 Basis of Payment

The following is added after the first paragraph:

The accepted quantity of clay borrow will be paid for at the Contract unit price per cubic yard. Payment shall be full compensation for obtaining clay borrow and excavating, loading, hauling, placing, grading and compacting necessary for the formation of the clay borrow. It shall also include full compensation for disposing of excavated material and surplus material when necessary, and shall include all materials, labor, tools and equipment necessary to complete this work.

Payment will be made under:

Pay Item		Pay Unit
203.45	Clay Borrow	Cubic Yard

SPECIAL PROVISION

SECTION 206

STRUCTURAL EXCAVATION

This Section is amended as follows:

All references to "waste storage areas" shall be deleted.

206.01 Description

The following is added after the first paragraph:

This work also shall consist of excavating and removal of earth materials at the new plaza islands for interchanges 32 and 36 within the limits of work as shown on the Plans or as approved by the Resident.

206.02 Construction Methods

The following paragraphs are added:

There are no approved waste storage areas or waste areas within the Project limits. Unsuitable materials shall be disposed of off-site in accordance with Subsection 203.06.

The bituminous pavement shall be disposed of by the Contractor off the Turnpike Right-of-Way. All bituminous pavement shall be disposed of in accordance with Chapter 404 of the Maine Department of Environmental Protection Solid Waste Management Regulations.

206.04 Method of Measurement

The following paragraph is added:

Excavation required to expose repair areas will be paid for under Item 206.08, Structural Earth Excavation - Major Structures. Backfill of the repair areas, not requiring gravel or hot bituminous pavement, will not be measured separately for payment, but shall be incidental to the Structural Earth Excavation item.

206.05 Basis of Payment

The following is added after the first paragraph:

The work shall also include all materials, equipment and labor associated with excavating, backfilling and compacting areas of structural excavation.

Payment will be made under:

Pay Item		Pay Unit
206.08	Structural Earth Excavation – Major Structures	Cubic Yard

SPECIAL PROVISION

SECTION 401

HOT MIX ASPHALT PAVEMENT

The following Specification is based on the MaineDOT February 11, 2009 Specification for Division 400, Pavements.

Section 401, Hot Mix Asphalt is deleted in its entirety and is replaced by the following:

401.01 Description

The Contractor shall furnish and place one or more courses of Hot Mix Asphalt Pavement (HMA) on an approved base in accordance with the Contract documents and in reasonably close conformity with the lines, grades, thickness, and typical cross sections as shown on the Plans or established by the Resident. The Authority will accept this work under Quality Assurance provisions, in accordance with these Specifications and the requirements of Section 106, Quality, the provisions of AASHTO M 323, except where otherwise noted in Sections 401 and 703 of these Specifications, and the MaineDOT Policies and Procedures for HMA Sampling and Testing.

401.02 Materials

Materials shall meet the requirements specified in Section 700, Materials:

- Asphalt Cement 702.01
- Aggregates for HMA Pavement 703.07
- HMA Mixture Composition 703.09

401.021 Recycled Asphalt Materials

Recycled Asphalt Pavement (RAP) may be introduced into the mixture at percentages approved by the Authority. If approved by the Authority, the Contractor shall provide documentation stating the source, average test results for average residual asphalt content, and stockpile gradations showing RAP materials have been sized to meet the maximum aggregate size requirements of each mix designation. The Authority will obtain samples for verification and approval prior to its use.

In the event that RAP source or properties change, the Contractor shall notify the Authority of the change and submit new documentation stating the new source or properties a minimum of 72-hours prior to the change to allow for obtaining new samples and approval.

The RAP shall be from an interstate highway and be from a Class I designated stockpile source.

401.03 Composition of Mixtures

The Contractor shall compose the Hot Mix Asphalt Pavement with aggregate, Performance Graded Asphalt Binder (PGAB), and mineral filler if required. HMA shall be designed and tested according to AASHTO R35 and the volumetric criteria in Table 1. The Contractor shall size, uniformly grade, and combine the aggregate fractions in proportions that provide a mixture meeting the grading requirements of the Job Mix Formula (JMF). The Contractor may use a maximum of 15 percent reclaimed asphalt pavement (RAP) in any base, binder, surface, or shim course. The Contractor may be allowed to use more than 15 percent RAP, up to a maximum of 25 percent RAP, in a base, binder, or shim course provided that PG 58-34 asphalt binder is used in the mixture.

The MaineDOT (Department), or an independent consultant approved by the Authority, will be providing the mix design verification (Job Mix Formula) for the Authority's approval. The Job Mix Formula (JMF) will be sent to the Department's Central Laboratory in Bangor, Maine. The samples will be obtained by the Department for laboratory testing. Before the start of paving, the Contractor and the Department will split a sample for verification of design before production will be allowed. The Contractor shall submit for Authority approval a JMF for each mixture to be supplied. The Authority may approve one (1) active design per nominal maximum size, per traffic level, per plant, plus a 9.5 mm "fine" mix @ 50 gyrations for shimming, and where required, a non-RAP design for bridge decks. The Authority shall then have 15 calendar days in which to process a new design before approval. The JMF shall establish a single percentage of aggregate passing each sieve size within the limits shown in Subsection 703.09. The mixture shall be designed and produced, including all production tolerances, to comply with the allowable control points for the particular type of mixture as outlined in Subsection 703.09. The JMF shall state the original source, gradation, and percentage to be used of each portion of the aggregate and mineral filler if required. It shall also state the proposed PGAB content, the name and location of the refiner, the supplier, the source of PGAB submitted for approval, the type of PGAB modification if applicable, and the location of the terminal if applicable.

In addition, the Contractor shall provide the following information with the proposed JMF:

- Properly completed JMF indicating all mix properties (Gmm, VMA, VFB, etc.).
- Stockpile Gradation Summary.
- Design Aggregate Structure Consensus Property Summary.
- Design Aggregate Structure Trial Blend Gradation Plots (0.45 power chart).
- Trial Blend Test Results for at least three different asphalt contents.
- Design Aggregate Structural for at least three trial blends.
- Test results for the selected aggregate blend at a minimum of three binder contents.
- Specific Gravity and temperature/viscosity charts for the PGAB to be used.
- Recommended mixing and compaction temperatures from the PGAB supplier.
- Material Safety Data Sheets (MSDS) For PGAB.
- Asphalt Content vs. Air Voids trial blend curve.
- Test report for Contractor's Verification sample.
- Summary of RAP test results (if used), including count, average and standard deviation of binder content and gradation.

At the time of JMF submittal, the Contractor shall identify and make available the stockpiles of all proposed aggregates at the plant site. There must be a minimum of 150 ton for stone stockpiles, 75 ton for sand stockpiles, and 50 ton of blend sand before the Authority will sample. The Authority shall obtain samples for laboratory testing. The Contractor shall also make available to the Authority the PGAB proposed for use in the mix in sufficient quantity to test the properties of the asphalt and to produce samples for testing of the mixture. Before the start of paving, the Contractor and the Authority shall split a production sample for evaluation. The Contractor shall test its split of the sample and determine if the results meet the requirements of the Department's written policy for mix design verification (See Maine DOT Policies and Procedures for HMA Sampling and Testing available at the Central Laboratory in Bangor). If the results are found to be acceptable, the Contractor will forward their results to the Authority's Lab, which will test the Authority's split of the sample. The results of the two split samples will be compared and shared between the Authority and the Contractor. If the Department finds the mixture acceptable, an approved JMF will be forwarded to the Authority. The Authority will then notify the Contractor that paving may commence. The first day's production shall be monitored, and the approval may be withdrawn if the mixture exhibits undesirable characteristics such as checking, shoving or displacement. The Contractor shall be allowed to submit aim changes within 24-hours of receipt of the first Acceptance test result for an individual JMF. Adjustments will be allowed of up to 2% on the percent passing the 2.36 mm sieve through the 0.075 mm and 3% on the percent passing the 4.75 mm or larger sieves. Adjustments will be allowed on the %PGAB of up to 0.2 percent. Adjustments will be allowed on Gmm of up to 0.010.

The Contractor shall submit a new JMF for approval each time a change in material source or materials properties is proposed. The same approval process shall be followed. The cold feed percentage of any aggregate may be adjusted up to 10 percentage points from the amount listed on the JMF, however no aggregate listed on the JMF shall be eliminated. The cold feed percentage for RAP may be adjusted up to five percentage points from the amount listed on the JMF but shall not exceed the maximum allowable percentage for RAP for the specific application.

TABLE 1
VOLUMETRIC DESIGN CRITERIA

Design ESAL's (Millions)	Required Density (Percent of G_{mm})			Voids in the Mineral Aggregate (VMA)(Minimum Percent)					Voids Filled with Binder (VFB) (Minimum %)	Fines/Eff. Binder Ratio
				Nominal Maximum Aggregate Size (mm)						
	$N_{initial}$	N_{design}	N_{max}	25	19	12.5	9.5	4.75		
<0.3	≤91.5	96.0	≤98.0	13.0	14.0	15.0	16.0	16.0	70-80	0.6-1.2
0.3 to <3	≤90.5								65-80	
3 to <10	≤89.0								65-80*	
10 to <30										
≥ 30										

** For 9.5 mm nominal maximum aggregate size mixtures, the maximum VFB is 82.*

** For 4.75 mm nominal maximum aggregate size mixtures, the maximum VFB is 84.*

**For 4.75mm nominal maximum aggregate size mixtures, the Fines/Effective Binder Ratio is 0.6-1.4*

401.031 Warm Mix Technology

The Contractor may place Hot Mix Asphalt Pavement produced with an accepted WMA technology if approved by the Authority. Methods or technologies shall generally be at the Contractors' option, but will be limited to proven, Agency and Industry accepted practice. Mixture production, placement and volumetric testing details, including temperatures, shall be included in the project specific QCP, submitted to the Authority for approval prior to any work.

401.04 Temperature Requirements

After the JMF is established, the temperatures of the mixture shall conform to the following tolerances:

- In the truck at the mixing plant – allowable range 275° to 325°F.
- At the paver – allowable range 275° to 325°F.
- Or the recommendations, approved by the Authority, from the Asphalt Binder supplier.

The JMF and the mix subsequently produced shall meet the requirements of Table 1 and Subsection 703.07.

401.05 Performance Graded Asphalt Binder

Unless otherwise noted in Special Provision Section 403, Hot Bituminous Pavement, PGAB shall be 64-28, except that for mixtures containing greater than 15 percent but no more than 25 percent RAP the PGAB shall be PG 58-34. The PGAB shall meet the applicable requirements of AASHTO M320 - Standard Specification for PGAB. The Contractor shall request approval from the Authority for a change in PGAB supplier or source by submitting

documentation stating the new supplier or source a minimum of 24-hours prior to the change. In the event that the PGAB supplier or source is changed, the Authority shall make efforts to minimize the occurrence of PGAB co-mingling.

401.06 Weather and Seasonal Limitations

The Contractor may place Hot Mix Asphalt Pavement for use other than a traveled way wearing course, provided that the air temperature as determined by an approved thermometer (placed in the shade at the paving location) is 40°F or higher and the area to be paved is not frozen. The Contractor may place Hot Mix Asphalt Pavement as traveled way wearing course, provided the air temperature determined as above is 45°F or higher. For the purposes of this Section, the traveled way includes truck lanes, ramps, approach roads and auxiliary lanes. The atmospheric temperature for all courses on bridge decks shall be 50°F or higher.

Hot Mix Asphalt Pavement used for curb, driveways, sidewalks, islands, or other incidentals is not subject to seasonal limitations, except that conditions shall be satisfactory for proper handling and finishing of the mixture. All mixtures used for curb, driveways, sidewalks, islands, or other incidentals shall conform to Subsection 401.04, Temperature Requirements. Unless otherwise specified, the Contractor shall not place Hot Mix Asphalt Pavement on a wet or frozen surface and the air temperature shall be 40°F or higher.

On all sections of overlay with wearing courses one inch thick or less, the wearing course for the travelway and adjacent shoulders shall be placed provided the air temperature is determined as above 50°F or higher.

401.07 Hot Mix Asphalt Plant

401.071 General Requirements

HMA plants shall conform to AASHTO M156.

a. Truck Scales - When the hot mix asphalt is to be weighed on scales meeting the requirements of Section 108, Payment, the scales shall be inspected and sealed by the State Sealer as often as the Authority deems necessary to verify their accuracy.

Plant scales shall be checked prior to the start of the paving season, and each time a plant is moved to a new location. Subsequent checks will be made as determined by the Resident. The Contractor will have at least ten 20 Kg [50 pound] masses for scale testing.

401.072 Automation of Batching

Batch plants shall be automated for weighing, recycling, and monitoring the system. In the case of a malfunction of the printing system, the requirements of Subsection 401.074 c. of this Specification will apply.

The batch plant shall accurately proportion the various materials in the proper order by weight. The entire batching and mixing cycle shall be continuous and shall not require any manual operations. The batch plant shall use auxiliary interlock circuits to trigger an audible alarm whenever an error exceeding the acceptable tolerance occurs. Along with the alarm, the

printer shall print an asterisk on the delivery slip in the same row containing the out-of-tolerance weight. The automatic proportioning system shall be capable of consistently delivering material within the full range of batch sizes. When RAP is being used, the plant must be capable of automatically compensating for the moisture content of the RAP.

All plants shall be equipped with an approved digital recording device. The delivery slip load ticket shall contain information required under Subsection 108.1.3, Provisions Relating to Certain Measurements, Mass and Paragraphs a, b, and c of Subsection 401.073.

401.073 Automatic Ticket Printer System on Automatic HMA Plant

An approved automatic ticket printer system shall be used with all approved automatic HMA plants. The requirements for delivery slips for payment of materials measured by weight, as given in the following Subsections, shall be waived: 108.1.3 a., 108.1.3 b., 108.1.3 c., and 108.1.3 d. The automatic printed ticket will be considered as the Weight Certificate.

The requirements of Subsection 108.1.3 f., Delivery Slips, shall be met by the weigh slip or ticket, printed by the automatic system, which accompanies each truckload, except for the following changes:

a. The quantity information required shall be individual weights of each batch or total net weight of each truckload.
b. Signatures (legible initials acceptable) of Weighmaster (required only in the event of a malfunction as described in 401.074 c.).
c. The MaineDOT designation for the JMF.

401.074 Weight Checks on Automatic HMA Plant

At least twice during each five days of production either of the following checks will be performed:

a. A loaded truck may be intercepted and weighed on a platform scale that has been sealed by the State Sealer of Weights and Measures within the past 12 months. The inspector will notify the producer to take corrective action on any discrepancy over 1.0%. The producer may continue to operate for 48-hours under the following conditions:

    1. If the discrepancy does not exceed 1.5%; payment will still be governed by the printed ticket.
    2. If the discrepancy exceeds 1.5%, the plant will be allowed to operate as long as payment is determined by truck platform scale net weight.

    If after 48-hours the discrepancy has not been addressed, and reduced below 1.0%, then plant operations will cease. Plant operation may resume after the discrepancy has been brought within 1.0%.

b. Where platform scales are not readily available, a check will be made to verify the accuracy and sensitivity of each scale within the normal weighing range and to

assure that the interlocking devices and automatic printer system are functioning properly.

c. In the event of a malfunction of the automatic printer system, production may be continued without the use of platform truck scales for a period not to exceed the next two working days, providing total weights of each batch are recorded on weight tickets and certified by a Licensed Public Weighmaster.

401.08 Hauling Equipment Trucks for hauling Hot Mix Asphalt

Trucks for hauling Hot Mix Asphalt Pavement shall have tight, clean, and smooth metal dump bodies, which have been thinly coated with a small amount of approved release agent to prevent the mixture from adhering to the bodies. Solvents based agents developed to strip asphalts from aggregates will not be allowed as release agents.

All truck dump bodies shall have a cover of canvas or other water repellent material capable of heat retention, which completely covers the mixture. The cover shall be securely fastened on the truck, unless unloading.

All truck bodies shall have an opening on both sides which will accommodate a thermometer stem. The opening shall be located near the midpoint of the body, at least 12 inches above the bed.

401.09 Pavers

Pavers shall be self-contained, self-propelled units with an activated screed (heated if necessary) capable of placing courses of Hot Mix Asphalt Pavement in full lane widths specified in the Contract on the mainline, shoulder or similar construction.

On projects with no price adjustment for smoothness, pavers shall be of sufficient class and size to place Hot Mix Asphalt Pavement over the full width of the mainline travel way with a 10 feet minimum main screed with activated extensions.

The Contractor shall place Hot Mix Asphalt Pavement on the mainline with a paver using an automatic grade and slope controlled screed, unless otherwise authorized by the Authority. The controls shall automatically adjust the screed and increase or decrease the layer thickness to compensate for irregularities in the preceding course. The controls shall maintain the proper transverse slope and be readily adjustable so that transitions and superelevated curves can be properly paved. The controls shall operate from a fixed or moving reference such as a grade wire or ski type device (floating beam) with a minimum length of 30 feet, a non-contact grade control with a minimum span of 24 feet, except that a 40 feet reference shall be used on mainline projects.

The Contractor shall operate the paver in such a manner as to produce a visually uniform surface texture and a thickness within the requirements of Subsection 401.101, Surface Tolerances. The paver shall have a receiving hopper with sufficient capacity for a uniform spreading operation and a distribution system to place the mixture uniformly, without segregation in front of the screed. The screed assembly shall produce a finished surface of the required evenness and texture without tearing, shoving, or gouging the mixture. Pavers with

extendible screeds shall have auger extensions and tunnel extenders as per the manufacturer's recommendations, a copy of which shall be available if requested.

The Contractor shall have the paver at the Project site sufficiently before the start of paving operations to be inspected and approved by the Authority. The Contractor shall repair or replace any paver found worn or defective, either before or during placement, to the satisfaction of the Authority. Pavers that produce an unevenly textured or non-uniform mat will be repaired or replaced before continuing to place HMA on MTA projects. On a daily basis, the Contractor shall perform nuclear density testing across the mat being placed, at 300 mm [12 in] intervals. If the values vary by more than 2.0 percent from the mean, the Contractor shall make adjustments until the inconsistencies are remedied.

Failure to replace or repair defective placement equipment may result in a letter of suspension of work and notification of a quality control violation resulting in possible monetary penalties as governed by Section 106, Quality.

401.10 Rollers

Rollers shall be static steel, pneumatic tire, oscillatory, or approved vibrator type. Rollers shall be in good mechanical condition, capable of starting and stopping smoothly, and be free from backlash when reversing direction. Rollers shall be equipped and operated in such a way as to prevent the picking-up of hot mixed material by the roller surface. The use of rollers, which result in crushing of the aggregate or in displacement of the HMA will not be permitted. Any Hot Mix Asphalt Pavement that becomes loose, broken, contaminated, shows an excess or deficiency of Performance Graded Asphalt Binder, or is in any other way defective shall be removed and replaced at no additional cost to the Authority with fresh Hot Mix Asphalt Pavement, which shall be immediately compacted to conform to the adjacent area.

The Contractor shall repair or replace any roller found to be worn or defective, either before or during placement, to the satisfaction of the Authority. Rollers that produce grooved, unevenly textured or non-uniform mat will be repaired or replaced before continuing to place HMA on MTA projects.

The type of rollers to be used and their relative position in the compaction sequence shall generally be at the Contractor's option, provided Specification densities are attained and with the following requirements:

a. On variable-depth courses, the first lift of pavement over gravel, reclaimed pavement, an irregular or milled surfaces, or on bridges, at least one roller shall be a 16 ton pneumatic-tired. Unless otherwise allowed by the Resident, pneumatic-tired rollers shall be equipped with skirting to minimize the pickup of HMA materials from the paved surface. When required by the Resident, the roller shall be ballasted to 20 ton.

b. Compaction with a vibratory or steel wheel roller shall precede pneumatic-tired rolling, unless otherwise authorized by the Authority.

c. Vibratory rollers shall not be operated in the vibratory mode when checking or cracking of the mat occurs, or on bridge decks.

d. Any method, which results in cracking or checking of the mat, will be discontinued and corrective action taken.

e. The use of an oscillating steel roller shall be required to compact all mixtures placed on bridge decks.

The maximum operating speed for a steel wheel or pneumatic roller shall not exceed the manufacturer's recommendations, a copy of which shall be available if requested.

401.101 Surface Tolerances

The Authority will check surface tolerance utilizing the following methods:

a. A 16 foot straightedge or string line placed directly on the surface, parallel to the centerline of pavement.
b. A 10 foot straightedge or string line placed directly on the surface, transverse to the centerline of pavement.

The Contractor shall correct variations exceeding 6 mm [1/4 in] by removing defective work and replacing it with new material as directed by the Authority. The Contractor shall furnish a 10 foot straightedge for the Authority's use.

401.11 Preparation of Existing Surface

The Contractor shall thoroughly clean the surface upon which Hot Mix Asphalt Pavement is to be placed of all objectionable material. When the surface of the existing base or pavement is irregular, the Contractor shall bring it to uniform grade and cross section. All surfaces shall have a tack coat applied prior to placing any new HMA course. Tack coat shall conform to the requirements of Section 409, Bituminous Tack Coat, Section 702, Bituminous Material, and all applicable sections of the Contract.

401.12 Hot Mix Asphalt Documentation

The Contractor and the Authority shall agree on the amount of Hot Mix Asphalt Pavement that has been placed each day. All delivery slips shall conform to the requirements of Subsection 401.073.

401.13 Preparation of Aggregates

The Contractor shall dry and heat the aggregates for the HMA to the required temperature. The Contractor shall properly adjust flames to avoid physical damage to the aggregate and to avoid depositing soot on the aggregate.

401.14 Mixing

The Contractor shall combine the dried aggregate in the mixer in the amount of each fraction of aggregate required to meet the JMF. The Contractor shall measure the amount of PGAB and introduce it into the mixer in the amount specified by the JMF.

The Contractor shall produce the HMA at the temperature established by the JMF.

The Contractor shall dry the aggregate sufficiently so that the HMA will not flush, foam excessively, or displace excessively under the action of the rollers. The Contractor shall introduce the aggregate into the mixer at a temperature of not more than 25°F above the temperature at which the viscosity of the PGAB being used is 0.150 Pa·s (Pascal-second).

The Contractor shall store and introduce into the mixer the Performance Graded Asphalt Binder at a uniformly maintained temperature at which the viscosity of the PGAB is between 0.150 Pa·s and 0.300 Pa·s. The aggregate shall be coated completely and uniformly with a thorough distribution of the PGAB. The Contractor shall determine the wet mixing time for each plant and for each type of aggregate used.

401.15 Spreading and Finishing

On areas where irregularities or unavoidable obstacles make the use of mechanical spreading and finishing equipment impracticable, the Contractor shall spread, rake, and lute the HMA with hand tools to provide the required compacted thickness. Solvent based agents developed to strip asphalts from aggregates will not be allowed as release agents.

On roads opened to two-way traffic, the Contractor shall place each course over the full width of the traveled way section being paved that day, unless otherwise noted by the Authority in Section 403, Hot Mix Asphalt Pavement.

In addition, Hot Mix Asphalt pavement placed on bridges shall also conform to Subsection 508.04 and the following requirements:

a. The bottom course shall be placed with an approved rubber mounted paver of such type and operated in such a manner that the membrane waterproofing will not be damaged in any way.

b. The top course shall not be placed until the bottom course has cooled sufficiently to provide stability.

c. The Contractor will not be required to cut sample cores from the compacted pavement on the bridge deck, unless otherwise directed by Special Provisions.

d. After the top course has been placed, the shoulder areas shall be sealed three feet wide with two applications of an emulsified bituminous sealer meeting the requirements of Subsection 612.03, Sealing, and Subsection 702.12, Emulsified Bituminous Sealing Compound. The first application shall be pre-mixed with fine, sharp sand, similar to mortar sand, as needed to fill all voids in the mix in the area being sealed. The second application may be applied without sand. The sealer shall be carried to the curb at the gutter line in sufficient quantity to leave a bead or fillet of material at the face of curb. The area to be sealed shall be clean, dry and the surface shall be at ambient temperature.

e. The furnishing and applying of the required quantity of sealer for the bridge shoulder areas shall be incidental to placing the hot mix asphalt pavement.

f. The atmospheric temperature for all courses placed on bridge decks shall be 50°F or higher.

401.16 Compaction

Immediately after the Hot Mix Asphalt Pavement has been spread, struck-off, and any surface irregularities adjusted, the Contractor shall thoroughly and uniformly compact the HMA by rolling.

The Contractor shall roll the surface when the mixture is in the proper condition and when the rolling does not cause undue displacement, cracking, or shoving. The Contractor shall prevent adhesion of the HMA to the rollers or vibrating compactors without the use of fuel oil or other petroleum based release agents. Solvents designed to strip asphalt binders from aggregates will not be permitted as release agents on equipment, tools, or pavement surfaces.

The Contractor shall immediately correct any displacement occurring as a result of the reversing of the direction of a roller or from other causes to the satisfaction of the Authority. Any operation other than placement of variable depth shim course that results in breakdown of the aggregate shall be discontinued. Any new pavement that shows obvious cracking, checking, or displacement shall be removed and replaced for the full lane width as directed by the Resident at no cost to the Authority.

Along forms, curbs, headers, walls, and other places not accessible to the rollers, the Contractor shall thoroughly compact the HMA with mechanical vibrating compactors. The Contractor shall only use hand tamping in areas inaccessible to all other compaction equipment. On depressed areas, the Contractor may use a trench roller or cleated compression strips under a roller to transmit compression to the depressed area.

Any HMA that becomes unacceptable due to cooling, cracking, checking, segregation or deformation as a result of an interruption in mix delivery shall be removed and replaced, with material that meets Contract Specifications at no cost to the Authority.

401.162 Voids

The HMA will be accepted for percent air voids on a sublot basis. Percent air voids will be determined in accordance with AASHTO T 312. Point of sampling will be from the truck at the plant. A sublot will consist of 500 tons. The number of samples per day will be computed as one for every 500 tons plus one for any additional fractional sublot that is equal to or greater than 100 tons or as directed by the Resident. There shall be a minimum of one sublot per day per JMF. One sample shall be taken and tested for each 500 tons of production or portions thereof. Full payment will be made for each 500 tons of production that meets the specified void range of 2.5 to 5.5 percent.

Payment reduction will be applied to each sublot (500 tons) that falls outside of this range. See Subsection 401.21.

401.163 PGAB Content

The HMA will be accepted for PGAB content on a sublot basis. PGAB content will be determined in accordance with AASHTO T 308. Point of sampling will be from the truck at the plant. A sublot will consist of 500 tons. The number of samples per day will be computed as one for every 500 tons plus one for any additional fractional sublot that is equal to or greater than 100 tons or as directed by the Resident. There shall be a minimum of one sublot per day per JMF.

Payment reduction will be applied to each sublot (500 tons) that falls outside the allowable limits. Note minimum asphalt content specified in Special Provision Section 403. See Subsection 401.21.

401.164 Density

Pavement density will be determined by comparing the density of six inch diameter full depth cores (for the course being laid) taken from the compacted pavement to the Theoretical Maximum Density of that core. Core locations shall be by random samples in conformance with ASTM-D979 & D3665. The Contractor shall supply a masonry saw with a 12 inch deep diamond wet cutting saw blade capable of cutting the six inch diameter cores.

For determination of pavement density, core samples six inches in diameter, for the full depth of the course being laid, shall be taken by the Contractor from the mixture incorporated in the work after finishing operations have been completed and the pavement has cooled to 70°F. Ice or dry ice shall be used to reduce temperature as necessary.

Vertical surface of the core area shall be coated with rubberized joint sealer prior to refilling with bituminous mixture. Cores will not be cut for shim pavement.

The joint sealer, bituminous mixture and the labor for obtaining these samples in the field and restoring the surface shall be furnished without charge by the Contractor. The joint sealant shall conform to Federal Specification SS-S-1401C and shall be incidental to the pavement items. Care must be exercised to avoid excess joint material on top of the finish mat and at the bottom of the joint.

No additional course shall be constructed on a course until the density of the sample has been established and approved.

The densities of the completed pavement shall be 92.5 to 97.0 percent of the theoretical maximum density obtained.

The pavement will be accepted for density on a sublot basis. A sublot will consist of 500 tons. The number of cores per day will be computed as one for every 500 tons plus one for any portion that does not equal 500 tons or as directed by the Resident. There shall be a minimum of one sublot per day per JMF.

Each sublot will be evaluated separately and full or partial payment will be made based on the results of tests performed on the cores.

Payment reduction will be applied to each core that has a density outside of the allowable range (92.5 to 97.0). See Subsection 401.21.

401.17 Joints

The Contractor shall construct wearing course transverse and longitudinal joints in such a manner that minimum tolerances shown in Subsection 401.101, Surface Tolerances, are met when measured with a straightedge.

The paver shall always maintain a uniform head of HMA during the joint construction.

The HMA shall be free of segregation and meet temperature requirements outlined in Subsection 401.04. Transverse joints of the wearing course shall be straight and neatly trimmed. The Contractor may form a vertical face exposing the full depth of the course by inserting a header, by breaking the bond with the underlying course, or by cutting back with hand tools. The Authority may allow feathered or "lap" joints on lower base courses or when matching existing base type pavements.

Longitudinal joints shall be generally straight to the line of travel, and constructed in a manner that will best ensure joint integrity. Methods or activities that prove detrimental to the construction of straight, sound longitudinal joints will be discontinued.

Extra care shall be taken to insure satisfactory vertical joints in the pavements. The Contractor shall apply a coating of joint sealant immediately before paving all cold joints (temperatures less than 120°F) to the vertical face of the wearing surface unless otherwise directed by the Resident. A heavy application of tack coat shall be applied to the vertical face of all cold joints on lower lifts. The Contractor shall use an approved spray apparatus designed for covering a narrow surface. The Authority may approve application by a brush for small surfaces, or in the event of a malfunction of the spray apparatus, but for a period of not more than one working day. Joint sealer shall conform to Federal Specification SS-S-1401C. The Contractor shall submit to the Resident a manufacturer’s certification for the joint sealant (SS-S-1401C).

Where pavement under this Contract joins an existing pavement or when the Authority directs, the Contractor shall cut the existing pavement along a smooth line, producing a neat, even, vertical joint. The Authority will not permit broken or raveled edges. The cost of all work necessary for the preparation of joints is incidental to related Contract pay items.

401.18 Quality Control

The Contractor shall submit for approval and operate in accordance with the approved Quality Control Plan (QCP) to assure a product meeting the Contract requirements. The QCP shall meet the requirements of Subsection 106.4, Quality Control, and this Section. The Contractor shall not begin paving operations until the Authority approves the QCP in writing. Prior to placing any mix, the Authority and the Contractor shall hold a pre-paving conference to discuss the paving schedule, source of mix, type and amount of equipment to be used, sequence of paving pattern, rate of mix supply, random sampling, project lots and sublots and traffic control.

A copy of the QC random numbers to be used on the Project shall be provided to the Resident. The Authority's random numbers for Acceptance testing shall be generated and on file with the Resident and the Project Manager. All personnel of the Authority and the Contractor who have significant information relevant to the paving items shall attend, including the responsible onsite paving supervisor for the Contractor. The Resident will prepare minutes of the conference and distribute them to all attendees. Any requests to revise the minutes must be made to the Resident within seven days of receipt. These minutes will constitute the final record of the pre-paving conference.

The QCP shall address any items that affect the quality of the Hot Mix Asphalt Pavement including, but not limited to, the following:

a. JMF(s).
b. Hot mix asphalt plant details.
c. Stockpile Management (to include provisions for a minimum 2 day stockpile).
d. Make and type of paver(s).
e. Make and type of rollers including weight, weight per inch of steel wheels, and average contact pressure for pneumatic tired rollers.
f. Name of QCP Administrator, and certification number.
g. Name of Process Control Technician(s) and certification number(s).
h. Name of Quality Control Technician(s) and certification number(s).
i. Mixing and transportation including process for ensuring that truck bodies are clean and free of debris or contamination that could adversely affect the finished pavement.
j. Testing plan.
k. Laydown operations including longitudinal joint construction, procedures for avoiding paving in inclement weather, type of release agent to be used on trucks tools and rollers, compaction of shoulders, tacking of all joints, methods to ensure that segregation is minimized, procedures to determine the maximum rolling and paving speeds based on best engineering practices as well as past experience in achieving the best possible smoothness of the pavement. Solvent based agents developed to strip asphalts from aggregates will not be allowed as release agents.
l. Examples of Quality Control forms including a daily plant report, daily paving report and delivery slip template for any plant to be utilized.
m. Silo management and details (can show storage for use on project of up to 36-hours).
n. Provisions for varying mix temperature due to extraordinary conditions or production limitations. If a warm-mix technology is utilized, a proposed target production range (not to exceed 50 F) will be provided for each mix design.
o. Name and responsibilities of the Responsible onsite Paving Supervisor.
p. Method for calibration/verification of Density Gauge.
q. A note that all testing will be done in accordance with AASHTO and the Maine DOT Policies and Procedures for HMA Sampling and Testing.
r. A detailed description of RAP processing, stockpiling and introduction into the plant as well as a note detailing conditions under which the percent of RAP will vary from that specified on the JMF.
s. A detailed procedure outlining when production will be halted due to QC or Acceptance testing results.
t. A plan to address the change in PGAB source or supplier and the potential co-mingling of differing PGAB's.
u. Provisions for how the QCP will be communicated to the Contractor's field personnel.

The QCP shall include the following technicians together with following minimum requirements:

a. QCP Administrator – A qualified individual shall administer the QCP. The QCP Administrator must be a full-time employee of or a consultant engaged by the Contractor or paving subcontractor. The QCP Administrator shall have full Authority to institute any and all actions necessary for the successful operation of the QCP. The QCP Administrator (or its designee in the QCP Administrator's absence) shall be available to communicate with the Authority at all times. The QCP Administrator shall be certified as a Quality Assurance Technologist certified by the New England Transportation Technician Certification Program (NETTCP).
b. Process Control Technician(s) (PCT) shall utilize test results and other quality control practices to assure the quality of aggregates and other mix components and control proportioning to meet the JMF(s). The PCT shall inspect all equipment used in mixing to assure it is operating properly and that mixing conforms to the mix design(s) and other Contract requirements, and that delivery slips and plant recordation accurately reflects the mix being produced with all required information. The QCP shall detail how these duties and responsibilities are to be accomplished and documented, and whether more than one PCT is required. The Plan shall include the criteria to be utilized by the PCT to correct or reject unsatisfactory materials. The PCT shall be certified as a Plant Technician by the NETTCP.
c. Quality Control Technician(s) (QCT) shall perform and utilize quality control tests at the jobsite to assure that delivered materials meet the requirements of the JMF(s). The QCT shall inspect all equipment utilized in transporting, laydown, and compacting to assure it is operating property and that all laydown and compaction conform to the Contract requirements. The QCP shall detail how these duties and responsibilities are to be accomplished and documented, and whether more than one QCT is required. The QCP shall include the criteria utilized by the QCT to correct or reject unsatisfactory materials. The QCT shall be certified as a Paving Inspector by the NETTCP.

The QCP shall detail the coordination of the activities of the Plan Administrator, the PCT and the QCT. The Project Superintendent shall be named the QCP, and the responsibilities for successful implementation of the QCP shall be outlined.

401.191 Inspection/Testing

All quality control testing at the plant and paving site for bituminous concrete paving shall be provided by the Contractor and will be incidental to the various items of the Contract. Quality control testing to verify the job mix formula at the plant shall be comprised of a sample taken and tested for each 500 tons of production. The plant will be shut down for two consecutive out of Specification test results for VMA, VFB, Fbe, PGAB content, gradation, and/or voids. Prior to resuming paving operations, the plant quality control unit shall satisfy the Authority that the plant production is in compliance with the Specifications. The plant, at no additional cost to the Authority, shall assign qualified quality control staff personnel and have an on-site laboratory equipped to perform all tests.

The Contractor shall submit a list of on-site laboratory and sampling facilities, including available equipment.

Adequate and convenient sampling facilities shall be provided, allowing the Resident and the Authority's designated quality assurance personnel to obtain representative samples from the full width and depth of the discharge area of each aggregate bin. The sampling tray shall be structurally supported during the sampling operation. Access to the sampling facilities shall be provided. The use of such access shall not be more difficult than climbing a ladder leading to a secure platform with railings.

Final acceptance shall be based on quality assurance tests to assure compliance with the job mix formula as established. Samples and certified quality control reports shall be available to the Resident and the Authority's designated quality assurance personnel as often as requested. Sample locations will be random in compliance with ASTM D3665 or as directed by the Resident.

When plant inspection is maintained, the material will be considered acceptable for use when the specified tests from samples obtained at the production plant indicate conformance to the approved job mix formula.

Quality assurance testing services for bituminous concrete pavement shall be provided by the Authority. The Contractor shall provide adequate space and all lab equipment, materials and chemicals at the bituminous plant necessary to verify job mix formula (asphalt content (AASHTO T 164 or T 308) and gradations). Upon completion, the Contractor shall be responsible for the proper disposal of all materials and chemicals. This work will not be measured separately for payment, but shall be incidental to the various items of the Contract.

A. Inspection. The Resident, or his authorized representative, shall have access and use of the laboratory facilities at any time and access to all parts of the plant for:

1. Inspection of the condition and operations of the plant.
2. Confirmation of the adequacy of equipment in use.
3. Verification of the character and proportions of the mixture.
4. Determination of temperatures being maintained in the preparation of the mixtures.
5. Inspection of incidental related procedures.
6. Performing quality assurance testing.

B. Plant Testing Laboratory. The Contractor shall provide a plant testing laboratory for use by the Authority's quality assurance personnel for acceptance testing functions.

The plant laboratory shall be available at the following times for use by the Authority's quality assurance personnel:

1. During periods of pavement production;
2. During periods of sampling and testing; and,
3. Whenever materials subject to the provisions of these Specifications are being supplied or tested.

The Authority's quality assurance personnel will always have priority in use of the laboratory. The laboratory shall have sufficient equipment in order for both (Authority's and Contractor's) testing representatives to operate efficiently.

The plant testing laboratory shall have a floor space area of not less than 150 square feet, with a ceiling height of not less than 7-1/2 feet. The laboratory shall be weather tight, sufficiently heated in cold weather and air-conditioned in hot weather, to maintain temperatures for testing purposes of 70°F ± 5°F.

As a minimum the plant testing laboratory shall have:

1. Adequate artificial lighting.

2. Electrical outlets sufficient in number and capacity for operating the required testing equipment and drying samples.

3. Two fire extinguishers, Underwriter's Laboratory approved.

4. Work benches for testing, minimum 2-1/2 feet by 10 feet.

5. Desk with two chairs.

6. Sanitary facilities convenient to testing laboratory.

7. Exhaust fan to outside air, minimum 12 inch blade diameter.

8. A direct telephone line and telephone including answering machine and FAX machine, operating 24-hours per day, seven days a week.

9. File cabinet with lock for Resident.

10. Sink with running water, attached drain board and drain.

11. Metal stand for holding washing sieves.

12. A Two element hot plate or other comparable heating device, with dial type thermostatic controls for drying aggregates.

13. Mechanical shaker and appropriate sieves (listed in 639.06) meeting the requirements of ASTM E11.

14. Superpave gyratory compactor.

15. Oven, thermostatically controlled, inside minimum one cubic foot.

16. Two volumetric specific gravity flasks, 500 CC.

17. Other necessary hand tools required for sampling and testing.

18. Library containing Contract Specification, latest ASTM Volumes 4.03 and 4.04, AASHTO Materials Parts I and II, and Asphalt Institute Publications MS-2 and SS-1.

19. Equipment for Maximum Theoretical Density meeting the requirements of AASHTO T209 and equipment for Bulk Spec. Gravity meeting the requirements of AASHTO T166.

20. Infra-red temperature measuring device for use at both plant and Project site.

21. Necessary equipment for extraction (wet sample) testing.

22. Diamond blade saw for trimming pavement cores.

23. Two ovens.

24. All equipment (scales, Superpave gyratory compactor, etc.) to have current calibrations and certifications.

Approval of the plant and testing laboratory by the Resident requires all the above facilities and equipment to be in good working order during pavement production, sampling and testing. Failure to provide any of the above shall be sufficient cause for disapproving the bituminous plant operations.

401.21 Method of Measurement

The Authority will measure Hot Mix Asphalt Pavement by the ton in accordance with Subsection 108.1, Measurement of Quantities for Payment.

This Subsection is amended by the following:

A reduction in payment will occur when the voids, asphalt content, and density are other than the limits specified below for 100 percent payment. The payment reduction for voids and PGAB content and density will be based upon each sublot (500 tons) of production as specified in Subsections 401.162, 401.163 and 401.164. The Contractor may request one retest for each failing sublot for core density only. The original core density and the recut core density shall be averaged together to determine payment for the sublot. No retest will be allowed for voids or asphalt content. The Contractor shall pay $100.00 for each additional core tested. Pavement restoration will not be measured separately for payment, but shall be incidental to the respective pay item.

Any lot resulting in zero payment shall be removed, disposed of and replaced at no additional cost to the Authority. Replacement pavement will be paid for based on the accepted and payment criteria specified herein.

CORE DENSITY VS. CORE THEORETICAL MAXIMUM DENSITY COMPACTION (SURFACE) 92.5-97 PERCENT	
PERCENT COMPACTION	**PERCENT PAYMENT**
92.5 - 97.0	100
91.5 - 92.4, 97.1 - 97.9	95
90.5 - 91.4, 98.0 - 98.9	90
89.5 - 90.4, 99.0 - 99.9	75
<89.5, > 99.9	0
Note: Percent compaction is the percentage of the field core density as compared to the Theoretical Maximum Density (TMD) of that core.	

*AIR VOIDS – 2.5 – 5.5 PERCENT	
VOIDS	**PAYMENT PERCENT**
2.5 to 5.5	100
2.0 - 2.4, 5.6 - 6.1	95
1.5 – 1.9, 6.2 – 6.6	90
1.0 - 1.4, 6.7-7.1	75
<1.0, >7.1	0
Note: Voids are based on the average of the test specimens fabricated at the plant for each sublot (500 tons). *Air voids payment does not apply for ARGG, but does for shut down criteria	

Payment for PGAB content shall be based on the JMF aim with an allowable production tolerance of 0.4 percent except that test results which fall outside of the following ranges shall not be permitted:

9.5 mm	5.7 – 7.5
12.5 mm	5.2 – 6.4
12.5mm(ARGG)	7.6 min.
19.0 mm	4.7 – 6.1

9.5 mm PGAB CONTENT	
% PGAB	% PAYMENT
JMF Aim ± 0.4	100
JMF Aim + 0.5 , - 0.5 , < 5.7	95
JMF Aim + 0.6 , - 0.6 , < 5.6	85
JMF Aim + 0.7 , - 0.7 , < 5.5	75
JMF Aim + 0.8 , - 0.8 , ≦ 5.4, > 7.5	50
Note: PGAB content is based on samples tested at the plant for each 500 Ton sublot	

12.5 mm PGAB CONTENT	
% PGAB	% PAYMENT
JMF Aim ± 0.4	100
JMF Aim + 0.5 , - 0.5 , < 5.1	95
JMF Aim + 0.6 , - 0.6 , < 5.0	85
JMF Aim + 0.7 , - 0.7 , < 4.9	75
JMF Aim + 0.8 , - 0.8 , ≦ 4.8, > 6.4	50
Note: PGAB content is based on samples tested at the plant for each 500 Ton sublot	

12.5 mm PGAB CONTENT(ARGG)	
% PGAB	% PAYMENT
JMF Aim ± 0.4	100
JMF Aim + 0.5 , - 0.5	95
JMF Aim + 0.6 , - 0.6	85
JMF Aim + 0.7 , - 0.7	75
JMF Aim + 0.8 , - 0.8	50
Note: PGAB content is based on samples tested at the plant for each 500 Ton sublot	

19.0 mm PGAB CONTENT	
% PGAB	% PAYMENT
JMF Aim ± 0.4	100
JMF Aim + 0.5 , - 0.5 , < 4.6	95
JMF Aim + 0.6 , - 0.6 , < 4.5	85
JMF Aim + 0.7 , - 0.7 , < 4.4	75
JMF Aim + 0.8 , - 0.8 , ≦ 4.3, > 6.1	50
Note: PGAB content is based on samples tested at the plant for each 500 Ton sublot	

As an example of payment reduction, if a sublot of 500 tons was tested and found to have 96 percent TMD compaction, 5.8 percent air voids and asphalt content of 5.58 percent, the payment reduction would be as follows:

500 tons x 1.00	= 500 tons payment	=	0 tons reduction (compaction)
500 tons x 0.95	= 475 tons payment	=	25 tons reduction (voids)
500 tons x 0.95	= 475 tons payment	=	25 tons reduction (asphalt content)

Payment = 500 tons - (0 + 25 + 25) = 450 tons

401.22 Basis of Payment

The Authority will pay for the work, in place and accepted, in accordance with the applicable sections of this Section, for each type of HMA specified.

The Authority will pay for the work specified in Subsection 401.11, for the HMA used, except that cleaning objectionable material from the pavement and furnishing and applying bituminous material to joints and contact surfaces is incidental.

Payment for this work under the appropriate pay items shall be full compensation for all labor, equipment, materials, and incidentals necessary to meet all related Contract requirements, including design of the JMF, implementation of the QCP, obtaining core samples, transporting cores and samples, filling core holes, applying specified material to joints, and providing testing facilities and equipment.

SPECIAL PROVISION

SECTION 403

HOT BITUMINOUS PAVEMENT

Desc. of Course	Grad. Design	Item Number	Bit Cont. % of Mix	Total Thick	No. Of Layers	Comp. Notes
			Mill and Fill			
Wearing	12.5 mm	403.2083	5.2 min. to 6.4	1-1/2 in.	1	A, B, C, D, E F, & G
Shim	4.75 mm	403.211	5.7 min to 7.50	1/2 in.	1	A, B, C, D, E, & F
			Cash Lane Mill and Fill			
Wearing	12.5 mm	403.208	5.2 min. to 6.4	1-1/2 in.	1	A, B, C, D, E & F
Shim	4.75 mm	403.211	5.7 min to 7.50	1/2 in.	1	A, B, C, D, E, & F
			Full Depth Construction			
Wearing	12.5 mm	403.2083	5.2 min. to 6.4	1-1/2 in.	1	A, B, C, D, E F, & G
Binder	12.5 mm	403.213	5.2 min. to 6.4	1-1/2 in.	1	A, B, C, D, E & F
Base	19 mm	403.207	4.7 min to 6.10	7 in.	3	A, B, C, D, E & F
			Full Depth Construction – Hand Placed Paid as Item 403.209 Including but not limited to drainage trenches, parking areas and median barrier hand placed areas			
Wearing	9.5 mm	403.209	5.2 min. to 6.4	1 to 1-1/2 in.	1	A, B, C, D, E & F
Binder	12.5 mm	403.209	5.2 min. to 6.4	1-1/2 in.	1	A, B, C, D, E & F
Base	19 mm	403.209	4.7 min to 6.10	7 in.	3	A, B, C, D, E & F

COMPLEMENTARY NOTES

A. The required PGAB for Items 403.2083 will meet a **PG 64E-28** grading. Refer to provisions of 403.02 – General for HMA, for additional testing and documentation requirements. The required minimum PGAB for Items 403.207, 403.208, 403.209, 403.211, and 403.213 shall be a **PG 64-28** grading.

B. A maximum of 15 percent RAP may be used in the Hot Mix Asphalt.

C. The MaineDOT will conduct the job mix verification. The aggregate qualities shall meet the design traffic level of 3 to < 10 million ESAL for mix placed under this Contract. The design, verification, Quality Control, and Acceptance tests for this mix will be performed at **75 gyrations**.

D. No vehicular traffic or loads shall be permitted on newly completed pavement until adequate stability has been attained and the material has cooled sufficiently to prevent distortion or loss of fines. The newly paved area may be opened to traffic after the internal temperature of the pavement has cooled to 120°F. The Resident will test the internal temperature of the pavement and shall be the sole judge as to the opening to traffic. The period of time before opening to traffic may be extended at the discretion of the Resident. The lane closure may not be removed until the internal temperature has cooled to 120°F.

E. Joints shall conform to Subsection 401.17.

F. Tack coat shall be applied to the pavement at a rate of 0.03G/SY prior to placing the surface course. Tack coat is required between all lifts of pavement, or as directed by the Resident.

G. Asphalt cement shall conform to the provisions of 403.02 – Polymer Modified PGAB for HMA.

SPECIAL PROVISION

SECTION 403

HOT BITUMINOUS PAVEMENT

(Hot Mix Asphalt, 12.5 mm (Polymer Modified))

403.01 Description

This work shall also consist of the construction, maintenance and removal of all temporary bituminous ramps at locations as shown on the Plans or as directed by the Resident.

403.02 General

The Contractor shall compose the Hot Mix Asphalt Pavement with aggregate, Performance Graded Asphalt Binder (PGAB), and mineral filler if required. The Performance Graded Asphalt Binder (PGAB) shall be polymer modified as detailed in this Special Provision and shall conform to the requirements of AASHTO M 320. The required PGAB shall be a storage-stable, preblended, homogeneous, polymer modified asphalt binder that meets PG 64E-28 grading requirements in AASHTO MP-19.

Polymer-Modified

The RTFOT (AASHTO T 240) residue of the polymer modified PGAB shall be tested by the Contractor according to ASTM D 6084 and have a minimum elastic recovery value of 60 percent at a test temperature of 25°C. The Contractor shall provide the Authority with documentation and test results from the asphalt binder provider showing that the polymer modified PGAB meets the requirements of this Special Provision. The base asphalt binder PGAB shall be unmodified and meet a **PG 58-28** to **PG 64-28** grading. The Authority may take an informational samples of the polymer modified PGAB at any time to evaluate its elastic recovery value.

403.03 Construction

All areas which have been milled or overlaid shall have a minimum 29 foot temporary ramp constructed at the milled or overlaid limits prior to opening the roadway to traffic. Temporary ramps shall be constructed using the same material as being placed on that day or as directed by the Resident. All temporary ramps are to be constructed on a sand joint. The Contractor shall be responsible for all repairs and maintenance required for the temporary ramps.

The Contractor shall be responsible for the layout of the longitudinal centerline between the travel lanes. The control points to establish this line will be furnished by the Authority.

The sand and loose debris adjacent to the median guardrail shall be removed and disposed of by the Contractor off of turnpike property.

403.04 Test Strip

A minimum test strip of 100 tons placed at a nominal depth of 1-1/2 inches, full lane width, shall be required. It shall be evaluated under testing requirements for mix volumetric and density. The exact location will be identified by the Authority. A fog coat of Item 409.15, Bituminous Tack Coat, shall be applied to the level course prior to the placement of the HMA surface course, payment to be made under the 409.15 Pay Item. The test strip will be excluded from the remainder of the projects' QA analysis. The Contractor shall notify the Authority at least 48-hours in advance of placing the test strip. The test strip is intended to allow the Contractor to establish a method of compaction and adjust plant settings prior to mainline plant production.

403.05 Method of Measurement

The construction and removal of temporary ramps on sand joints, and maintaining the ramps will not be measured separately for payment, but shall be incidental to Item 403.

The removal of sand and loose debris will not be measured separately for payment, but shall be incidental to paving items.

Hot Mix Asphalt, 12.5 mm (Polymer pavement with (up to) 15 percent RAP, placed as a wearing surface will be measured under Item 403.2083, Hot Mix Asphalt, 12.5 mm (Polymer Modified).

403.06 Basis of Payment

Hot Mix Asphalt, 12.5 mm (Polymer Modified) pavement with (up to) 15 percent RAP, placed as a wearing surface will be paid under Item 403.2083, Hot Mix Asphalt, 12.5 mm (Polymer Modified).

The following Pay Item is added:

Pay Item		Pay Unit
403.2083	Hot Mix Asphalt, 12.5 mm (Polymer Modified)	Ton

SPECIAL PROVISION

SECTION 409

BITUMINOUS TACK COAT

409.02 Bituminous Material

This Subsection is deleted in its entirety and replaced with the following:

Bituminous material shall conform to the Specifications for Emulsified Asphalt RS-1, of the AASHTO Designation M-140.

409.05 Equipment

Add "or as determined by the Resident", after the words "gal/yd^2]" in the fourth line of the second paragraph of this Subsection.

409.06 Preparation of Surface

The following paragraph is added:

All existing pavement and shoulder areas on which bituminous concrete mixtures are to be placed shall receive a tack coat. The surface area where the tack coat is to be applied shall be dry and cleaned of all dirt, sand, and loose material. Cleaning shall be accomplished by use of revolving brooms or mechanical sweepers. Undesirable material not removed by the above means shall be cleaned by hand-brooming or scraping, or a combination of both. Small areas otherwise inaccessible may be broomed with hand brooms. The tack coat shall be applied only when the existing surface is dry.

409.08 Method of Measurement

The following paragraphs are added:

Measurement will be based on delivery slips made out in duplicate by the Contractor and signed by the Resident, or his representative, at the point of delivery. One of these slips shall be retained by the Resident and one by the Contractor. Delivery slips shall be furnished by the Contractor and shall provide space for identifying the vehicle and driver, for stating the volume of material, the source of the material, the date, and the Resident or his representative's signature.

Material included in the delivery slips and not used or rejected shall be deducted from the amount being measured for payment. Each day's delivery slips shall be reconciled by the Contractor and the Resident within 24-hours.

Cleaning of the surface area where tack coat is to be applied shall be incidental to Item 409.15, Bituminous Tack Coat, Applied.

SPECIAL PROVISION

SECTION 419

SAWING AND SEALING JOINTS IN BITUMINOUS PAVEMENT

(Sawing Bituminous Pavement)

419.01 Description

This work consists of sawing bituminous concrete pavement as shown on the Plans, as specified herein or as approved by the Resident.

419.02 General

The bituminous concrete pavement to be sawed shall be accurately marked before cutting. The marking shall be in accordance with the locations as shown on the Plans or as approved by the Resident. Cutting shall be with an approved power driven saw with an abrasive blade.

Unless otherwise noted or directed, the sawcut shall be vertical, a minimum of 3/8 inch wide, and extend to the depth as shown on the Plans.

Residue or debris from the sawing operation shall be removed immediately and legally disposed of by the Contractor.

419.03 Method of Measurement

Sawing Bituminous Pavement will be measured by the linear foot of pavement actually cut and accepted. No additional payment will be made for variations in the pavement thickness.

419.04 Basis of Payment

Sawing Bituminous Pavement will be paid for at the Contract unit price per linear foot which shall be full compensation for all materials, tools, equipment, labor, and all incidentals necessary for the completion of the work to the satisfaction of the Resident. The disposal of sawcut residue shall be incidental to this item.

Payment will be made under:

Pay Item		Pay Unit
419.30	Sawing Bituminous Pavement	Linear Foot

SPECIAL PROVISION

SECTION 502

STRUCTURAL CONCRETE

This Subsection is deleted in its entirety and replaced with the following:

502.01 Description

This work shall consist of furnishing and placing Portland Cement Concrete for structures and incidental construction in accordance with these Specifications and in conformity with the lines, grades and dimensions shown on the Plans or established, or for placing concrete fill or underwater seals for foundations where called for on the Plans.

502.02 Classification

The Portland Cement Concrete shall be the class indicated on the Plans.

502.03 Materials

Materials shall meet the requirements specified in the following Subsections of Division 700, Materials:

Portland cement and Portland-pozzolan cement	701.01
Water	701.02
Air-Entraining Admixtures	701.03
Water Reducing Admixtures	701.04
High Range, Water Reducing, Admixture	701.0401
Set-retarding Admixtures	701.05
Curing Materials	701.06
Waterstops	701.07
Smoothed Surfaced Asphalt Roll Roofing (formerly heavy roofing felt)	701.08
Fly Ash	701.10
Calcium Nitrite Solution	701.11
Silica Fume	701.12
Ground Granulated Blast Furnace Slag	701.13
Fine Aggregate for Concrete	703.01
Coarse Aggregate for Concrete	703.02
Alkali Silica Reactive Aggregates	703.0201
Preformed Expansion Joint Filler	705.01
Bridge Drains	711.04
Non-Metallic Conduit	715.03
Anchor Bolts	720.07

In Subsection 701.10, Fly Ash, the “Loss on Ignition (LOI)” paragraph is deleted and replaced with the following:

Loss on Ignition (LOI) - Shall be 6.0 percent maximum per AASHTO T105 (ASTM C311) provided the Fly Ash has a documented history of not adversely effecting the concrete air content, otherwise the LOI shall be 3.0 percent maximum per AASHTO T105 (ASTM C311).

502.04 Shipping and Storage

Cement may be shipped in bags or in bulk from pre-tested and approved silos at the cement mill. The cement shall be completely protected from rain and moisture. Any cement damaged by moisture or which fails to meet any of the specified requirements shall be rejected and removed from the site. If requested by the Resident, cement stored for a period longer than 60 days shall be retested before being used in the work.

Bags of cement in shipment or storage shall not be piled more than eight (8) bags high. Bags of cement which for any reason have become partially set or which contain lumps of caked cement shall be rejected. Shipments of cement in bags shall be separately stored in a manner as to provide easy access for identification and inspection of each shipment.

Fly ash and slag shall be stored in weather tight silos approved by the Resident. All silos shall be completely empty and clean before material is deposited therein, unless the silo already contains material of the same type and properties.

Fly ash or slag remaining in bulk storage for a period greater than one (1) year after completion of tests will be resampled and retested by the supplier before shipment or use.

Handling, shipping and stockpiling of aggregates shall be done in such a way as to minimize segregation and breakage.

Fine aggregate and each size of coarse aggregate shall be stored in completely separate stockpiles on prepared bases constructed of the same material as that to be stockpiled, with a minimum thickness of 300 mm [1 foot]. The ground under the prepared bases shall be reasonably graded to drain away from the stockpile and shall be free of brush or other harmful vegetation. The base shall be left in place, undisturbed for the duration of the use of the stockpile. Prepared bases can be salvaged for reuse provided this material is reprocessed. Barge floors, wood, metal or other approved hard surfaces shall be considered acceptable alternates for the prepared bases described above.

502.041 Testing Equipment

The Contractor shall provide testing equipment and materials as specified below for use by the Resident or their representative exclusively. The equipment shall be available and acceptable to the Resident one (1) week prior to placing any concrete. All costs associated with providing and maintaining testing equipment shall be incidental to the work and no additional payment will be made.

The Resident will maintain the test equipment in reasonable condition. However, the Contractor shall replace any equipment that becomes unusable due to normal wear and tear or which is stolen or damaged from other than the Resident's neglect or mistreatment. All such replacement costs shall be incidental to the work and no additional payment will be made.

A. Pressure air meter meeting requirements of AASHTO T152 (Type B) and all accessory pay items required for use with the particular design of apparatus. This shall include one nine inch mason trowel, one metal scoop nine inches long *x* five inches wide, one tamping rod conforming to AASHTO T119, one rubber mallet as described in AASHTO T152, one strike off bar (flat straight bar of steel). The air meter shall be functional and shall bear a current calibration certificate issued by a recognized testing laboratory. Current shall mean within the calendar year.

B. Two pocket dial thermometers 0˚F to 200˚F, one inch diameter dial, five inch pointed stem, unbreakable poly carbonate crystal, stainless steel case, stem and bezel. Accuracy required is one percent over entire range.

C. "Contractors" rubber tired wheelbarrow.

D. Two D-handle square end shovels 9-1/2 inches wide.

E. Two pair heavy duty, long cuff, rubber gloves.

F. Miscellaneous equipment: 16 oz. plastic squeeze bottle, five gallon bucket, scrub brush, paper towels, folding rule, and rubber syringe.

G. Small rod – one tamping rod conforming to AASHTO T277.

H. Slump cone.

I. 10 foot straightedge as required by the Resident.

502.05 Composition and Proportioning

Concrete shall be composed of a homogenous mixture of Portland Cement, fly ash, or ground granulated blast furnace slag, fine aggregate, coarse aggregate, water and admixtures proportioned according to these Specifications and shall conform to the requirements of Table 1.

At least 45 days prior to placement of any concrete to be incorporated in the bridge or other concrete structure, the Contractor shall submit mix designs that meet the requirements of Table 1 along with the proposed sources of aggregates, cement, water and admixtures for each class of cement concrete specified. Sufficient material shall be obtained by the Authority's designated testing personnel at the proposed sources for verification of acceptability by test and for mix design. Materials failing to meet the specified requirements shall be rejected and new materials shall be resubmitted to the laboratory. The Authority's testing laboratory will determine the proportions of cement, aggregate, water, air entraining agents, and other admixtures of all specified and proposed concrete mixtures by means of trial design batches and tests using the consistencies, air content and other properties suitable for the work and in accordance with the latest applicable AASHTO or ASTM Standards and designations.

TABLE 1
MASTER LIMITS TABLE

Class of Concrete	Minimum Compressive Strength at 28 Days	Minimum Cementitious Content	Water Cement Ratio	Slump	Air Content	Maximum Coarse Aggregate Size (703.02)	Notes
	PSI	LB/CY		INCHES	%	INCHES	
A	4000	611	0.38±0.02	6 ± 2	6 ± 1	1	3, 4
AA	4000	658	0.38±0.02	3.5	5 to 7	3/4	1, 3
AAA	4500	658	0.38±0.02	6 ± 2	6 ± 1	3/4	3, 4, 6
AAA-Deck	4500	658	0.42±0.02	6 ± 2	7.5 ± 1	3/4	3, 4, 6
AAA - Modified	4500	752	0.38±0.02	6 ± 2	6 ± 1.5	3/8	3,4
B	3000	517	0.40±0.02	6 ± 2	5 ± 1	1-1/2	1, 3
S	3500	635	0.38±0.02	6 ± 2	6 ± 1	1-1/2	1, 3
P	SEE PLANS	658	0.38±0.02	6 ± 2	5 ± 1	3/4	3, 4, 5
IS	3000	470	0.58	5 ± 1	3.0% Max	1-1/2	2, 3

NOTES:

1. All concrete shall contain either a normal water reducing admixture (Type A) or a high range water reducing admixture (HRWR) meeting the requirements of Subsection 701.0401. When a HRWR is used, a maximum of an 8.0 inch slump is allowed.

2. All concrete shall contain a non-chloride based, mid-range water reducing admixture (MRWR) meeting the requirements of ASTM C494.

3. All concrete shall contain a Portland Cement replacement. Portland Cement pre-blended with either fly ash or ground granulated blast-furnace slag may be used when accepted by the Resident.

   Due to the lower heat of hydration effect of high cement replacements, the Contractor is responsible for selecting a replacement level which is appropriate for the time of year if cold weather conditions are anticipated.

4. All concrete shall contain a high range water reducing admixture (HRWR) meeting the requirements of Subsection 701.0401. A minimum of one-half the design dosage of the HRWR should be added at the plant to insure thorough mixing. The HRWR should be added in strict accordance with the manufacturer's guidelines and limitations. The HRWR Guidelines shall be submitted to the Resident for review and approval. The concrete will not be slump tested by the Authority prior to the addition of the HRWR. The supplier shall provide the aggregate moisture adjustment and plant-added water on the delivery tickets. If additional slump is required in the field, it will be achieved with

additional HRWR (in accordance with the manufacturer's recommendations and limitations).

5. A calcium nitrate corrosion inhibitor meeting the requirements of ASTM 494 Type C shall be added at a rate of not less than four (4.0) gallons per cubic yard.

6. Synthetic Fiber Reinforcement shall be added to all Concrete Pavement Slabs concrete mixes in accordance with Special Provision 503 “Synthetic Fiber Reinforcement”.

Deck concrete (Class AAA - Deck) may gain strength slower than other Authority mix designs, and the Contractor shall plan construction operations accordingly.

The mix design submitted by the Contractor shall include the following information:

A. Description of individual coarse aggregate stockpiles, original source, bulk specific gravity, absorption, gradation and alkali silica reactivity test results. A combined coarse aggregate blended gradation shall be provided.

B. Description of fine aggregate, original source, bulk specific gravity, absorption, colorimetric, gradation and Fineness Modulus (F.M.).

C. Description and amount of cement and cement replacement material.

D. Target water cement ratio.

E. Target water content by volume.

F. Target strength.

G. Target air content, slump, and concrete temperature.

H. Target concrete unit weight.

I. Type and dosages of air entraining and chemical admixtures.

Approval by the Authority will be contingent upon the ability of the mix design proportions to meet the concrete strength requirement and other factors that affect durability. Cement replacements are included in the cementitious material.

Concrete mix designs shall contain 15 to 30 percent fly ash replacement by weight, or 25 to 50 percent slag cement replacement by weight. Class AAA-Deck concrete mix designs shall contain a maximum of 30 percent slag cement replacement by weight.

Cast-in-place concrete shall contain not more than 660 lb/cy of cementitious material, except for Class AAA-Modified which shall contain no more than 760 lb/cy of cementitious material.

All concrete mixes must be designed in accordance with the criteria of this Section. The design proportions with the fine aggregates designated as a percent of the total aggregate must be

stated in terms of aggregate in a saturated, surface dry condition and the batch weights will be adjusted by the Contractor for the actual moisture of the aggregate at the time of use.

Based on the design parameters, including minimum cement factor and maximum water cement ratio, a curve representing the relation between the water/cement ratio and the average seven day and 28 day compressive, or earlier strength at which the concrete is to receive its full working load, will be established by the Authority's laboratory for a range of values including all of the compressive strengths required. The curves shall be established by at least three points, each point representing average values from at least three test specimens. Amount of water used in the concrete, as determined from the curve, shall correspond to the required average strength called for in the Specifications in accordance with the ACI 301-89, Table for Laboratory Mix Design Data – Required Average Compressive Strength shown below. When required, the consistency of the basic mix selected shall be adjusted by the use of high range water reducers.

LABORATORY MIX DESIGN DATA
REQUIRED AVERAGE COMPRESSIVE STRENGTH

SPECIFIED f'_c	REQUIRED f'_{cr}
LESS THAN 3000 PSI	f'_c + 1,000 PSI
3000 PSI TO 5000 PSI	f'_c + 1,200 PSI
OVER 5000 PSI	f'_c + 1,400 PSI
The curves shall be established by at least three (3) points, each point representing the average values from at least three (3) test specimens for each age of seven (7) and twenty-eight (28) days. Laboratory tests are valid for ninety (90) days.	

The laboratory adjusted mix design will then be forwarded to the Contractor for his use. No change in the source or character of the mix ingredients may be made without notice to the Resident, and no new mix ingredients shall be used until the Resident has approved such ingredients and new mix proportions, if they change. Additional testing, if required, shall be paid for by the Contractor.

502.0501 Quality Control

The Contactor shall control the quality of the concrete through testing, inspection and quality control practices which shall be sufficient to assure a product meeting the Contract requirements.

Concrete sampling for quality control (QC) shall be taken at the discharge point with pumped concrete sampling taken at the discharge end of the pump line.

For each truckload of concrete, the Contractor shall provide a Certificate of Compliance to the Authority at the time of the load placement. The Certificate of Compliance shall be a form acceptable to the Authority and shall include the following:

- Contract Name & Number
- Bridge Name (if applicable)

- Manufacturing Plant (Batching Facility)
- Name of Contractor (Prime Contractor)
- Date
- Time Batched/Time Discharged
- Truck No.
- Quantity (Quantity Batched this Load)
- Type of Concrete by Class and Producer Design Mix No.
- Cement Brand or Type, and Shipment Certification No.
- Temperature of Concrete at Discharge
- Target Weights per Cubic Yard and Actual Batched Weights for:

    1. Cement
    2. Pozzolanic additives, including fly ash, slag cement, and microsilica
    3. Coarse concrete aggregate
    4. Fine concrete aggregate
    5. Water (including free moisture in aggregates and water added at the Project)
    6. Admixtures brand and quantity (fl. oz./cubic yard)

        - Air-entraining admixture
        - Water reducing admixture
        - Other admixtures

- Placement Location

502.0502 Quality Assurance

The Authority will determine the acceptability of the concrete through a quality assurance program and field measurement of surface tolerance, alignment and trueness, plumb and batter, and finish.

The Authority will take verification tests at times deemed appropriate by the Resident. Verification tests will include compressive strength, air content and permeability.

Concrete sampling for verification tests will be taken at the discharge point, with pumped concrete sampling taken at the discharge end of the pump line.

Compressive strength test will be completed by the Authority in accordance with AASHTO T22 at 28 days except that no slump will be taken. The average of two cylinders will be used to determine compressive strength.

Testing for entrained air in concrete, at the rate of one test per load, shall be in accordance with AASHTO T152.

Determination of the concrete cover over reinforcing steel for structural concrete shall be made prior to concrete being placed in the forms. Bar supports, chairs, slab bolsters, and side form spacers shall meet the requirements of CRSI Chapter 3, Section 2.5 Class 1, Section 2.6 Class 1A or Section 4. All supports shall meet the requirements for type and spacing as stated in the Concrete Reinforcing Steel Institute (CRSI) Manual of Standard Practice, Chapter 3. Concrete will not be placed until the placing of the reinforcing steel and supports have been approved by the Resident. If the Contractor fails to secure Authority approval prior to placement, the Contractor's failure shall be cause for removal and replacement at the Contractor's expense. The Contractor shall notify the Resident, at least 48-hours prior to the placement, when the reinforcing steel will be ready for checking. Sufficient time must be allowed for the checking process and any needed repairs.

Rejection by Resident - For material not meeting Project Specifications, the Authority at its sole discretion will:

A. Require the Contractor to remove and replace the entire affected placement with concrete meeting the Contract requirements at no additional expense to the Authority; or,

B. Accept the material at a reduced payment as determined by the Authority.

Surface Tolerance, Alignment and Trueness, Plumb and Batter, and Finish - The Resident will measure each of these properties as follows:

A. Surface Tolerance - Exposed horizontal and sloping portions of the substructure, superstructure slabs, wearing surface, sidewalks, parapets, barriers, and wingwalls will be measured at randomly generated locations with a 10 foot straightedge once per 100 ft^2. Measurements beyond tolerances given in Table 5, Subsection 502.14(E) will be cause for removal or pay adjustment and potential corrective action as determined by the Resident. The Contractor shall furnish the 10 foot straightedge. At the Resident's discretion, measurements

may be taken with a lightweight profiler. When the Resident uses the lightweight profiler to measure tolerance, and the International Ride Index (IRI) is between 250 and 300 inches/mile for any one placement, a pay adjustment will be made. When tolerances exceed 300 inches/mile, there will be cause for removal or a pay adjustment and potential corrective action.

B. Alignment and Trueness - Alignment and trueness may be measured by the Resident longitudinally along any vertical surface of any portion of the structure and shall not exceed a deviation of 1/4 inch in three feet for structures up to 30 feet in length. Structures in excess of 30 feet in length will be subject to a maximum tolerance of two inches. Measurements exceeding these tolerances will be cause for removal or pay adjustment and potential corrective action as determined by the Resident.

C. Plumb and Batter - The Resident will measure all columns and other vertical surfaces that will remain exposed to determine actual plumbness and batter. Measurements will be taken subsequent to every placement. Vertical faces of columns will be measured at a minimum of two faces at right angles to each other. Other vertical surfaces will be measured once every 15 feet along the face of longitudinal wall. All measurements will be made on a per placement basis and will be subject to a tolerance of 1/4 inch in 10 feet. Measurements between 1/4 inch and 1/2 inch in 10 feet will result in pay adjustments. Measurements beyond 1/2 inch in 10 feet will be cause for removal or pay adjustment and potential corrective action as determined by the Resident.

D. Finish - The Resident will measure and determine the areas to be repaired in accordance with Subsections 502.10(d), 502.13, and 502.14(e) for each placement. Areas to be repaired will be measured as a percentage of the total surface area of the placement. Those areas to be repaired that are between zero and five percent of the total surface area of the placement will result in no pay adjustments. Areas to be repaired that are between five percent and 10 percent will result in pay adjustments. Areas greater than 10 percent of the total surface area of the placement will be cause for removal or pay adjustment and corrective action as determined by the Resident.

Appropriate pay adjustments, as described in Subsection 502.194, will be made for any or all of the properties described above that do not meet Specification requirements.

502.0505 Resolution of Disputed Acceptance Test Results

The Contractor shall work cooperatively with the Resident in maintaining Control Charts in order to identify potential issues with any test results and take appropriate actions to address these issues before they become disputed issues. Circumstances may arise where the Authority's test results indicate that a material is unacceptable and removal is warranted. If the material is marginally acceptable, it may remain in place and be paid for at a reduced rate determined by the Authority. This Subsection provides recourse for the Contractor to contest the Authority's QA test results as follows, at no additional cost to the Authority:

A. Compressive Strength - The Contractor shall take appropriate corrective measures when the Resident advises the Contractor that the average of three consecutive compressive strength test results fall to less than 150 psi above the specified strength, or any single test falls more than 200 psi below the specified strength. The Contractor shall make corrective changes in materials, mix proportions, or in the concrete manufacturing procedure before additional concrete of the same class is placed.

There may be situations where there is the possibility that an underlying structural element could be built-upon before test results for the underlying element have been reported, based upon the normal frequency of testing. In these instances, it is in the Contractor's best interest to perform additional testing that will provide indications that the concrete will meet the requirements of the applicable Specifications, prior to continuing to build upon this underlying element. In the extreme case where an underlying structural element has been built-upon before test results for the underlying element have been reported, the above mentioned safeguards of tracking and additional testing have failed and the final test results for the concrete of the underlying element indicate that removal is warranted and the Contractor's QC results do not confirm the Authority's test results, the following procedure concerning compressive strength may be undertaken by the Contractor and witnessed by the Authority, within 36 days of the placement date:

1. Drilled core specimens shall be retrieved from the concrete in question in accordance with the requirements of ASTM C42/C42M, Standard Test Method for Obtaining and Testing Drilled Cores and Sawed Beams of Concrete. The core strength acceptance and evaluation criteria included in ACI 318 shall not apply.

2. Three drilled core specimens shall be taken from each sublot in question, from randomly selected locations to be representative to the entire volume of the sublot. The Resident and the Contractor's representative shall agree on the sample locations prior to drilling. The specimens shall have a minimum diameter of four inches and a minimum length of eight inches.

3. The concrete cores shall be taken directly from the Project to the Authority's designated independent testing laboratory where they will be tested. The cores shall be protected from drying and damage during transport. The Contractor shall make arrangements with the Authority's designated independent testing laboratory for testing prior to beginning the coring process.

4. Core test results will be evaluated by the Authority with the understanding that the strength of drilled cores is, in general, 85 percent of that of corresponding standard-cured molded cylinders. Therefore, the test results of the three cored cylinders shall be averaged, and then divided by a factor of 0.85. The resulting compressive strength shall be used by the Authority in the final determination of the acceptability of the material in question and shall replace the contested test result in computing pay adjustments for the sublot in question. If coring is not done with the 36 day time limit, the Authority will not allow dispute testing of the sublot.

5. If the Authority concludes that the strength of the structural element in question is adequate as a result of the above procedure, then the concrete shall remain in place and will be paid for at a reduced rate, as determined by the Authority. If the Authority concludes that the strength of the structural element in question is unsatisfactory as a result of the above procedure, then the Authority will direct the Contractor to take appropriate actions, as determined by the Authority, and at no additional cost to the Authority.

B. Entrained Air – In order to dispute the Authority's test results, the Contractor must test material from the same sample as the Authority. If the difference between the Authority's and the Contractor's air tests is equal to or greater than 0.8 percent, then the material shall be retested by both parties. If the difference between the retests is equal to or greater than 0.8 percent, the concrete placement will be suspended immediately, and 1) both air meters shall be calibrated immediately, or 2) the Contractor shall immediately replace both air meters. Once it is demonstrated the QC and Acceptance air meters are in agreement with 0.8 percent, the concrete placement may resume.

502.06 Batching

Measuring and batching shall be performed at an approved batching plant, unless otherwise approved by the Resident. The batching plant shall meet the requirements of AASHTO M-157.

502.0701 Delivery

A. Delivery and discharge of the concrete from the mixer shall be completed within a maximum of 1-1/2-hours from the time the cement is added to the aggregate, except that in hot weather when the concrete mix temperature exceeds 70˚F or under other conditions contributing to quick stiffening of the concrete, delivery and discharge from the mixer shall be completed within one hour. When approved by the Resident, the use of a retarding admixture (Type D) may be used for increasing the one hour discharge time to 1-1/2-hours, provided concrete temperatures are kept below 80˚F and conditions contributing to quick stiffening of the concrete are not present.

B. Concrete, which has been condemned for any reason, shall be removed immediately from the jobsite and disposed of properly.

C. Concrete temperature before placement shall not exceed 85˚F.

D. All concrete trucks must have working revolution counters, and be set to zero at the start of mixing. Any truck without a counter will be rejected from the job unless the Contractor can assure the Resident that adequate mixing has been achieved.

502.08 Cold Weather Concrete

All frost, ice, and snow shall be removed from all material that will be in contact with fresh concrete.

Unless authorized by the Resident, the mixing and placing of concrete shall be discontinued when the atmospheric temperature is below 40˚F in the shade and dropping and shall not be resumed until the atmospheric temperature is as high as 35˚F in the shade and rising. If authorization is granted for the mixing and placing of concrete under atmospheric conditions different from those specified above, the water shall be heated to a temperature not exceeding 180˚F. When either the aggregate or water is heated to above 120˚F, they are to be combined first in the mixer before the cement is added. If the atmospheric temperature is below 25˚F, the aggregate shall also be heated when approved by the Resident. Materials containing frost or lumps of frozen material shall not be used. Stockpiled aggregates may be heated by the use of

dry heat or steam. Aggregates shall not be heated directly by gas or oil flame or on sheet metal over a fire. When aggregates are heated in bins, steam coil or water coil heating or other methods that will not be detrimental to the aggregates may be used. The heating apparatus shall be capable of heating the mass uniformly and preventing the occurrence of spots of overheated material. The temperature of the mixed concrete shall be between the minimum values shown in Table 4 and 70˚F when it is placed in the forms. Salt or other chemicals shall not be added to the concrete for any reason whatsoever, except by written permission of the Resident.

TABLE 4
COLD WEATHER TEMPERATURE TABLE

MINIMUM FORM DIMENSION SIZE

Less than 300 mm (12 in.)	300 – 900 mm (12 - 36 in.)	900 – 1800 mm (36 - 72 in.)	Greater than 1800 mm (72 in.)
13˚C (55˚F)	10˚C (50˚F)	7˚C (45˚F)	5˚C (40˚F)
MINIMUM CONCRETE TEMPERATURE AS PLACED			

When permitted by the Resident, footings may be protected by completely submerging them by admitting water inside the cofferdam. Until submersion takes place, the temperature of the concrete and its surface shall be controlled as specified above. Submersion shall proceed slowly and the temperature of the air or water shall be maintained sufficient to prevent ice from forming within the cofferdam for a period of seven (7) days after the placing of the concrete.

When depositing concrete under water, there shall be no ice inside the cofferdam.

Permission given to place concrete under the conditions mentioned above shall not relieve the Contractor of responsibility for obtaining satisfactory results. The Contractor shall be wholly responsible for the protection of concrete during cold weather operations and any concrete injured by frost action or overheating shall be removed and replaced at the Contractor's expense.

502.10 Forms and False Work

A. Construction of Forms - All forms shall be well built, substantial and unyielding, securely braced, strutted and tied to present motion and distortion while concrete is being placed in them. The forms shall be strong enough to safely support the weight of the concrete and all superimposed loads (such as runways, concrete buggy loads, workers, scaffolding, etc.) placed upon them.

Forms shall be built to conform to the dimensions, location, contours and details shown on the Plans. The faces of forms against which the concrete is to be placed shall be dressed smooth and uniform and shall be free from winds, twists, buckles and other irregularities.

Stay-in-place forms of any type will not be permitted for any part of the slab structures, unless otherwise indicated on the Plans.

The placing of concrete in excavated pits and trenches without forms will be permitted only in exceptional cases and then at the discretion of the Resident.

All corners within the forms shall be fitted with chamfer strips mitered at their intersections, except that chamfer strips will not be required as follows: (1) on corners of slab blocking of interior steel beams and the inside of exterior steel beams; (2) on corners constructed transversely at the underside of the slab of superstructures which consist of a concrete slab on steel beams; (3) on footings not exposed to view; and (4) on all structures when more than two feet below the final finished ground line.

Chamfer strips shall have a width across the diagonal face between 1/2 inch and 3/4 inch. The size to be adopted for a given portion of the work shall depend upon the general dimensions. Except where special size chamfer strips are shown on the Plans, the size of chamfer strips shall be uniform on individual projects. Provisions shall be made for the chamfering of the top edges of abutment bridge seats and wing walls, tops of piers and retaining walls, tops of through girders, roadway curbs, etc., by nailing chamfer strips inside the forms. Unless otherwise provided, all chamfer strips shall produce plain flat surfaces on the concrete.

The forms for beams, girders and spandrel arches shall be so constructed as to permit the sides to be removed without disturbing the supports.

All foreign matter within the forms shall be removed before depositing concrete in them.

In all cases where metal anchorages or ties within or through the face forms are required to hold the forms in their correct position, such anchorages or ties shall be of ample strength and shall be constructed so that the metal work can be removed to a depth of not less than one inch from the face and back surfaces of the concrete without damaging such surfaces.

Elevations will be taken on the top flanges of structural steel beams and girders for the purpose of determining the depth of blocking necessary for the construction of the forms for the concrete slab, after the following conditions have been satisfied:

1. The satisfactory erection of the superstructure structural steel beams or girders, including any required flooring beams and stringers, unless an alternative plan is submitted by the Contractor and approved by the Authority.

2. All bolt tightening operations must be complete.

3. No foreign loads supported by the beams or girders are present.

The Contractor shall submit working drawings for approval of the proposed forms supporting the superstructure slabs, and of the proposed forms and false work supporting the overhanging portion of the superstructure slab in accordance with Subsection 105.7. The working drawings shall show the size, spacing and location of the supporting members, and the proposed loads and weight of the concrete forms to be carried by the members. The proposed superstructure slab form and false work systems' computations, plans, and working drawings shall be designed and sealed by the Contractor's Professional Engineer, who must be registered in the State of Maine. This Professional Engineer may be directly employed or otherwise retained by the Contractor.

In the construction of forms and false work for the portion of superstructure slabs overhanging the exterior members of beam and girder spans, forms and supporting devices

resulting in point loadings on the exterior members shall not be used. Loads resulting from supporting devices shall be distributed directly to the flanges by means of brackets or braces.

All forms shall be inspected and approved by the Professional Engineer responsible for the design of the form and false work systems before the placing of any concrete within them. The Professional Engineer shall, after inspection, provide a sealed certification to the Resident that the systems were erected in conformance with the Professional Engineer's Plans and design details.

B. Surface Treatment of Forms - The inside surfaces of forms shall be uniformly coated with form oil or other approved surface treatment.

Form surfaces shall be treated before placing the reinforcing steel.

C. Construction of False Work - All false work used for supporting reinforced concrete superstructures shall be composed of members having ample structural sections to resist all loads imposed upon them, with deformations less than span length / 360.

When the vertical members of false work consist of piles or when framed or other false work is supported upon piles, the piles shall be driven to secure a safe load resistance.

When false work is supported upon mud sills, the foundation pressures resulting from the imposed loads upon the mud sills (false work, forms, fresh concrete, scaffolding, etc.) shall not exceed the capacity of the on-site soils.

All false work systems shall be designed to support all vertical loading and any differential settlement forces, all horizontal and longitudinal forces, and shall account for any temporary unbalanced loading due to the placement sequence of the concrete. Sufficient redundancy shall be designed into centering or false work systems so that the failure of any member shall not cause a collapse. Design computations, layout drawings, and details of materials for the centering or false work systems shall be submitted to the Authority for its records. The erection of centering or false work systems shall be accomplished in strict conformance with the design and details. No concrete shall be placed without prior approval of the Resident.

False work systems adjacent to and/or over traveled ways shall additionally be designed to resist any vibration forces due to traffic and shall incorporate sufficient protection against impact by errant vehicles.

All false work system computations, plans and working drawings shall be designed and sealed by the Contractor's Professional Engineer, who must be registered in the State of Maine. This Professional Engineer may be directly employed or otherwise retained, by the Contractor. Prior to concrete placement, the Professional Engineer responsible for the design of the false work system shall, after false work inspection, provide a sealed certification to the Resident that the system was erected in conformance with the Professional Engineer's Plans and design details.

False work shall be so constructed that the forms will have a camber, the amount depending upon the deflection anticipated in the design.

Forms supported upon false work shall be provided with a satisfactory means for their adjustment in the event of settlement or deformation of the false work due to overloading or other causes.

Provisions shall be made for the gradual lowering of false work and rendering the supported structure self-supporting.

D. Removal of Forms and False Work

1. Location, weather conditions, cementitious materials used and the character of the structure involved shall be considered in determining the time for the removal of forms and false work. Forms and false work shall not be removed until concrete cylinders cured with the structure establish that the concrete has developed 80 percent of design strength. The Contractor shall cast and break two cylinders per sublot and furnish the Resident with these test reports before removal of the forms and false work.

   When approved by the Resident, the vertical forms of footings, walls, columns and sides of beams and slabs may be removed 48-hours after completion of placement of concrete, exclusive of the time the ambient air temperature is below 45˚F and provided the following conditions are met:

   Immediately after the forms are removed, defects in the concrete surface shall be repaired in accordance with Subsection 502.13 and the repaired area thoroughly dampened with water. The surfaces of exposed concrete shall be cured for the remainder of the seven day curing period by the application of a product listed on the Maine Department of Transportation Prequalified list of curing compounds. The curing compound shall be applied continuously by an approved pressure spraying or distributing equipment at a rate necessary to obtain an even, continuous membrane, meeting the manufacturer's recommendation but at a rate of not less than 1 gal/200 ft^2 of surface. Other methods of curing concrete may be used with the prior approval of the Resident.

2. Forms and false work, including blocks and bracing, shall not be removed without the consent of the Resident. The Resident's consent shall not relieve the Contractor of responsibility for the safety of the work. In no case shall any portion of the wood forms be left in the concrete. As the forms are removed, all projecting metal devices that have been used for holding the forms in place shall be removed in accordance with Subsection 502.10. The holes shall be filled as required in Subsection 502.13.

502.11 Placing Concrete

A. General – Concrete shall not be placed until forms and reinforcing steel have been checked and approved by the Resident. The forms shall be clean of all debris. The method and sequence of placing the concrete shall be approved before any concrete is placed.

All concrete shall be placed before it has taken its initial set and, in any case, as specified in Subsection 502.0701. Concrete shall be placed in horizontal layers in such a manner as to avoid separation and segregation. A sufficient number of workers for the proper handling, tamping and operation of vibrators shall be provided to compact each layer before the succeeding layer is placed and to prevent the formation of cold joints between layers. Care shall be taken to prevent mortar from spattering on structural steel, reinforcing steel and forms. Any concrete or mortar that becomes dried on the structural steel, reinforcing steel or forms shall be thoroughly cleaned off before the final covering with concrete. Following the placing of the concrete, all exposed surfaces shall be thoroughly cleaned as required, with care not to injure any surfaces.

Concrete shall not come in direct contact with seawater during placing and for a period of 72- hours thereafter, except as follows:

1. Concrete seals that are located entirely below low tide.

2. Concrete footings constructed in the dry and located entirely below low tide or final ground elevation.

3. Concrete Fill placed under water.

Concrete in any section of a structure shall be placed in approximately horizontal layers of such thickness that the entire surface shall be covered by a succeeding layer before the underlying layer has taken its initial set. Layers shall not exceed 18 inches in thickness and be compacted to become an integral part of the layer below. Should the placement be unavoidably delayed long enough to allow the underlying layer to take initial set or produce a so-called "cold joint", the following steps shall be taken:

- An incomplete horizontal layer shall be bulk headed-off to produce a vertical joint.

- Horizontal joints shall be treated as required in this Subsection 502.11(F).

- Portland Cement concrete with a high range, water reducing admixture shall not be placed when the concrete mix temperature is below 40˚F or above 85˚F.

The concrete in superstructures shall be placed monolithically except when construction joints are shown on the Plans or are authorized in accordance with approved details submitted by the Contractor. If the concrete in the stems of T-beams is to be placed independent of the slab section, the construction joint shall be located at the under side of the slab and the bond between stem and slab shall be a mechanical one. The bond shall be produced by embedding two *x* four, four inch wooden blocks having a length approximately four inches less than the width of the stem and placed horizontally at right angles to the centerline of the beam in the top surface of the concrete immediately following the completion of the concrete placement. To provide for the uniform spacing of the blocks and their ready removal when the concrete has taken a set sufficient to hold its form, the blocks shall be firmly nailed upon a board at a distance of one foot center to center. The blocks shall be thoroughly oiled to facilitate their ready removal from the concrete.

In arch spans, the order of construction or sequence of the work, as shown on the Plans shall be followed in the placing of concrete.

In no case shall the work on any section or layer be stopped or temporarily discontinued within 18 inches below the top of any face, unless the Plans provide for a coping having a thickness less than 18 inches in which case, at the option of the Resident, the construction joint may be made at the under side of the coping. Concrete in columns shall be placed in one continuous operation, unless otherwise directed.

Fresh concrete, threatened with rain damage shall be protected by approved means. Sufficient material for covering the work expected to be done in one day shall be on hand at all times for emergency use. The covering shall be supported above the surface of the concrete.

Concrete Fill shall be placed at least to the pay limits shown on the Plans. Forms may be omitted at the Contractor's option. Vibration of concrete will not be required. The Contractor has the option of placing concrete fill under water or in the dry.

B. Chutes, Troughs, Pipes and Buckets - Sectional drop chutes or short chutes, troughs, pipes and buckets when used as aids in placing concrete, shall be arranged and used in such a manner that the ingredients of the concrete do not become separated or segregated. Wood and aluminum chutes, troughs, pipes or buckets shall not be used.

Dropping the concrete a distance of more than six feet, unless confined by closed chutes or pipe will not be permitted. The concrete shall be deposited at or as near as possible to its final position.

C. Vibrating - Mechanical, high frequency internal vibrators shall be used, operating within the concrete, for compacting the concrete in all structures and precast and cast-in-place piles, with the exception of concrete placed under water. The vibrators shall be an approved type with a frequency of 5,000 to 10,000 cycles per minute and shall be visibly capable of properly consolidating the designed mixture. A spare vibrator shall be available on the Project at all times during the placing of concrete.

Sufficient vibrators shall be used to consolidate the incoming concrete within five (5) minutes after placing. Vibrators shall neither be held against forms or reinforcing steel, nor shall they be used for flowing the concrete or spreading it into place. Over-vibrating shall not be allowed.

D. Dewatering Forms - All forms shall be dewatered before concrete is placed in them. Pumping will not be permitted from the inside of forms while concrete is being placed. Moving water shall not be permitted to be exposed to fresh concrete.

E. Depositing Concrete Under Water - No concrete shall be deposited under water except for cofferdam seals. Pumping will not be allowed within the cofferdam while concrete is being placed.

Seal concrete shall be placed carefully in a compact mass in its final position by means of a tremie or by other approved means and shall not be disturbed after being deposited. Bottom dump buckets will not be permitted. Special care must be exercised to maintain still water at the point of deposit. Seal concrete shall not be placed in running water. The method of depositing

concrete shall be so regulated as to produce approximate horizontal surfaces. Each seal shall be placed in one continuous operation.

When a tremie is used, it shall consist of a tube not less than 10 inches in diameter. The means of supporting the tremie shall be such as to permit free movement of the discharge end over the entire seal and to permit its being lowered rapidly, when necessary to choke-off or retard flow. The tremie shall be filled by a method that will prevent washing of the concrete. The discharge end shall be completely submerged in concrete at all times and the tremie tube shall be kept full to the bottom of the hopper. The flow shall be regulated by raising or lowering the tremie.

When the horizontal area of the tremie seal is large, several tremie hoppers shall be provided and positioned strategically to allow easy deposit of concrete near the point where it is needed to avoid moving concrete horizontally through the water. The number of tremie hoppers and the work plan shall be approved by the Resident.

All laitance or other unsatisfactory material shall be removed from the surface of the seal before placing additional concrete. The surface shall be cleaned by scraping, chipping or other means that will not injure the concrete.

The placing and dewatering of seal concrete within cofferdams shall be in accordance with Section 511, Cofferdams.

F. Construction Joints - Construction joints shall be located where shown on the Plans or permitted by the Resident. When the concrete is in seawater, except concrete cores for stone masonry, no horizontal construction joint will be permitted between extreme low tide and extreme high tide elevations.

At horizontal construction joints, temporary gage strips having a minimum thickness of 1-1/2 inches shall be placed horizontally inside the forms along all exposed faces to give the joints straight lines. The joint shall be so constructed that the surface of the concrete will not be less than 1/4 inch above the bottom of the gage strip. Before placing fresh concrete, the temporary gage strip shall be removed, the surfaces of construction joints shall be thoroughly cleaned, drenched with water until saturated and kept saturated until the new concrete is placed. Immediately prior to placing new concrete, the forms shall be drawn tight against the concrete already in place. Concrete in substructures shall be placed in such a manner that all horizontal joints will be horizontal and if possible, in locations such that they will not be exposed to view in the finished structure.

Where vertical construction joints are necessary, reinforcing bars shall extend across the joint in such a manner as to make the structure monolithic. Construction joints through paneled wing walls or other large surfaces which are to be treated architecturally will not be allowed except as shown on the Plans. All vertical construction joints in abutments and retaining walls shall contain water stops as shown on the Plans. The water stops shall be one continuous piece at each location.

All horizontal construction joints in abutments and retaining walls shall be constructed using a joint cover, as shown on the Plans.

Construction joints in the wearing surface shall be located where called for on the Plans. No other construction joints will be allowed.

All joints shall be formed in the manner detailed on the Plans. The forms shall not be treated with oil or any other bond breaking material that will adhere to the concrete.

Sealing slots shall be provided at all joints in the wearing surface that are located directly over a slab construction joint.

Construction joints in the wearing surface not receiving a sealing slot shall be brushed with a neat cement paste immediately prior to making the adjacent concrete placement.

After the concrete has been cured, sealing slots, when required, shall be sandblasted with approved equipment to remove all laitance and foreign material on the surfaces of the slots. The bottom of the sealing slots shall receive an approved bond breaker. The joint shall then be filled within 1/8 inch of the surface with a poured sealant conforming to the following requirements and in accordance with the manufacturer's recommendations. The joint sealant supplied shall be an approved two component, elastomeric sealant capable of 50 percent joint movement. Both components shall be in liquid form and the combining ratio of components by volume shall be as recommended by the manufacturer.

G. Concrete Wearing Surface and Structural Concrete Slabs on Precast Superstructures

When called for on the Plans, a separate concrete wearing surface or structural concrete slabs on precast superstructures shall be bonded to the supporting slab. No surface preparation of a new structural concrete slab shall begin before completion of the specified curing period.

When the supporting slab is composed of cast-in-place concrete, the Contractor shall scabble the entire surface of the structural concrete slab and then sandblast the entire structural concrete slab surface. When the supporting slab is comprised of precast units, the Contractor shall sandblast the entire deck surface.

The entire area of the deck surface and the faces of curb and barrier walls or other median devices, up to a height of one inch above the top elevation of the wearing surface or slab, shall be cleaned to a bright, clean appearance which is free from curing compound, laitance, dust, dirt, oil, grease, bituminous material, paint and all other foreign matter. Air lines shall be equipped with effective oil traps. The cleaning of an area of the deck shall be performed within the 24-hour period preceding placement of the wearing surface. The cleaning shall be performed by dry sand blasting or other methods approved by the Resident. All debris from the cleaning operation shall be thoroughly removed by compressed dry air from the cleaned surfaces and adjacent areas. The cleaned areas shall be protected against contamination before placement of the wearing surface. Contaminated areas shall be recleaned by dry sand blasting. Prepared, areas that have not received the wearing surface within 36-hours shall be recleaned.

All horizontal surfaces in contact with the wearing surface shall receive a coating of bonding grout or bonding agent listed on Maine Department of Transportation Prequalified List of Bonding Agents. The vertical faces in contact with the wearing surface shall be broomed-up to the elevation of the top of the wearing surface with bonding grout or an approved bonding agent.

Stiff bristled street brooms shall be used to brush the grout onto the surface. The coating shall not exceed 1/8 inch in thickness. The rate of progress in applying grout shall be limited so the grout does not become dry before it is covered with new concrete. During delays in the surfacing operations, should the surface of the grout indicate an extensive amount of drying, the grout shall be removed by methods approved by the Resident and the area should be regrouted.

The bonding grout shall have Portland Cement and fine aggregate proportioned 2 to 1 by volume. The fine aggregate from which the material larger than 1/8 inch has been removed shall be the same source as used in the concrete. The cement and fine aggregate shall be measured separately in appropriately sized containers. The fine aggregate shall be deposited in an approved mechanical mortar mixer before adding cement. Water shall be added in sufficient quantity to allow flow of the grout without segregation of the grout ingredients.

No water shall be added after initial mixing. The grout shall not be allowed to separate before placement. The cement to water contact time of the grout shall not exceed 30 minutes before it is placed. Any grout that has dried or become unworkable before application, as determined by the Resident, shall not be incorporated into the work. The use of retarding admixtures for increasing the discharge time limits will be allowed.

The Resident may approve the batching of bonding grout at an approved commercial concrete batch plant. In this case, mixing and delivery shall be in transit truck mixers. The bonding agent shall be one of the products listed on the Maine Department of Transportation's List of Prequalified Bonding Agents and shall be applied in accordance with the manufacturer's recommendations.

No structural concrete slab structure, including but not necessarily limited to, concrete deck slabs, wearing surfaces, simple slab spans and slabs on precast superstructures, shall be commenced if the combination of ambient air temperature, relative humidity, wind speed, and plastic concrete temperature result in a surface moisture evaporation rate theoretically equal to or greater than 0.1 $lb/ft^2/hr.$ of exposed surface (refer to the Rate of Evaporation from Concrete Surface Chart). If the surface moisture evaporation rate rises to 0.15 $lb/ft^2/hr.$ of exposed surface, the Contractor shall immediately implement remedial actions to reduce the surface moisture evaporation rate. The temperature of the concrete shall not exceed 75˚F at the time the concrete is placed in its final position. The maximum temperature of the surface on which concrete will be placed shall be 90˚F. The Contractor shall provide all equipment and perform all measurements and calculations in the presence of the Resident to determine the rate of evaporation.

RATE OF EVAPORATION FROM CONCRETE SURFACE NOMOGRAPH

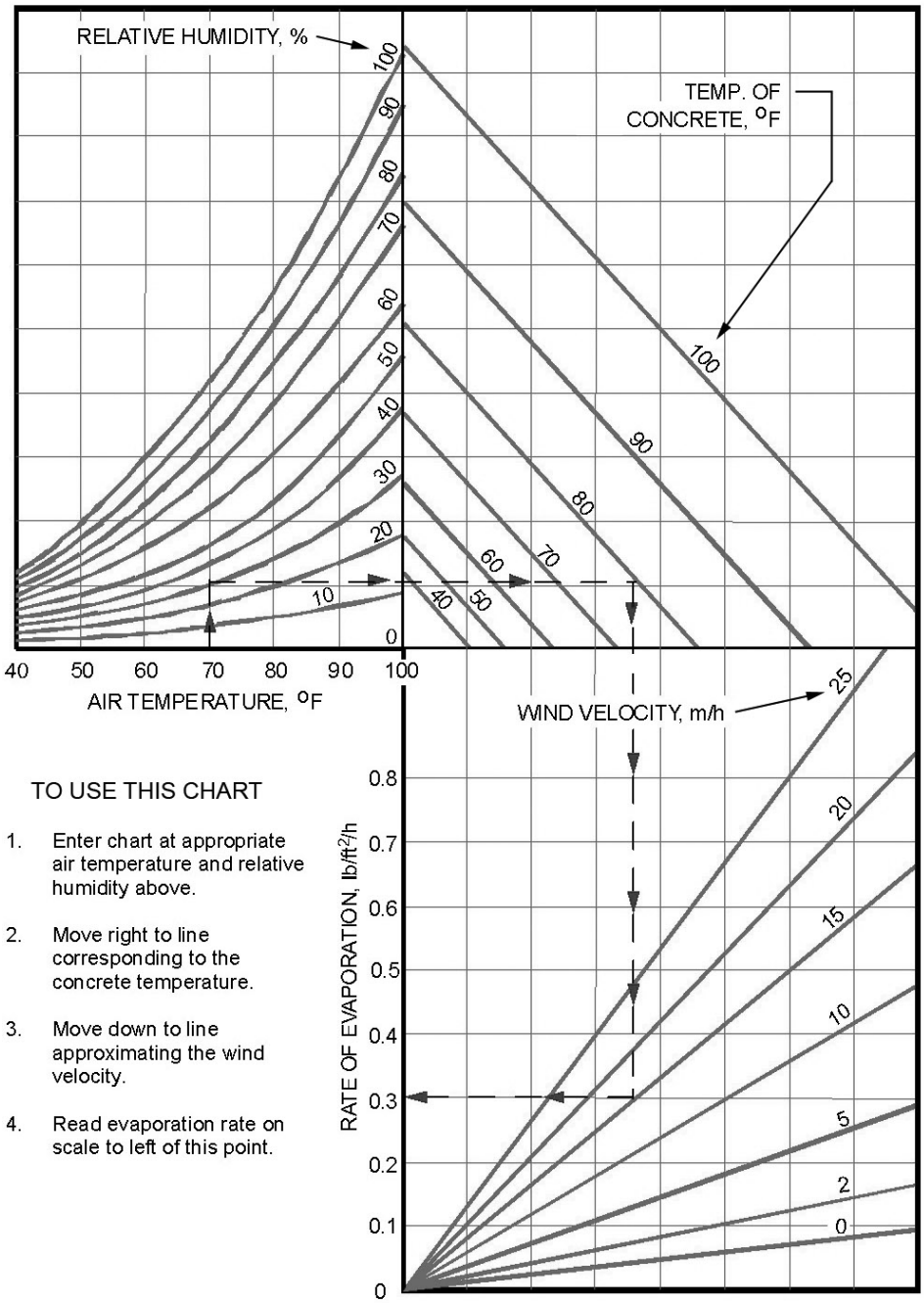

TO USE THIS CHART

1. Enter chart at appropriate air temperature and relative humidity above.
2. Move right to line corresponding to the concrete temperature.
3. Move down to line approximating the wind velocity.
4. Read evaporation rate on scale to left of this point.

502.12 Expansion and Contraction Joints

Expansion and contraction joints shall be located and constructed or sawn as shown on the Plans and within the timeline allotted. Water stops shall be one continuous piece at each location. Joint cover, as shown on the Plans, shall be applied to all joints where water stops cannot physically be installed, as determined by the Resident.

502.13 Repairing Defects and Filling Form Tie Holes in Concrete Surfaces

After the forms are removed, all surface defects and holes left by the form ties shall be repaired.

All fins and irregular projections shall be removed from the following: Surfaces which are visible in the completed work; surfaces to be waterproofed; and the portion of vertical surfaces of substructure units which is below the final ground surface to a depth of 12 inches, not including underwater surfaces.

In patching surface defects, all coarse or fractured material shall be chipped away until a dense uniform surface, exposing solid coarse aggregate is obtained. Feathered edges shall be sawcut away to form faces having a minimum depth of one inch perpendicular to the surface. All surfaces of the cavity shall be saturated thoroughly with water, after which a thin layer of neat cement paste shall be applied. The cavity shall then be filled with thick, reasonably stiff mortar, not more than 30 minutes old, composed of material of the same type and quality and of the same proportions as that used in the concrete being repaired. The surface of this mortar shall be floated before initial set takes place and shall be neat in appearance. The patch shall be water cured for a period of five (5) days.

If the removal of defective concrete materially impairs the soundness or strength of the structure, as determined by the Resident, the affected unit shall be removed and replaced by the Contractor at their expense.

The holes left by form ties, on the portions of substructure concrete that are to be permanently covered in the finished work, may be filled with an acceptable grade of plastic roofing cement. Holes in the bottom of slabs caused by supporting hangers need not be filled with the exception of voids that expose the top side of a girder top flange. Where holes in the deck or haunch are required to be filled, this work shall be completed using an approved high performance elastomeric sealant.

502.14 Finishing Concrete Surfaces

Neat cement paste, dry cement powder or the use of mortar for topping or plastering of concrete surfaces will not be permitted.

A. Float Finish - A float finish for horizontal surfaces shall be achieved by placing an excess of concrete in the form and removing or striking-off the excess with a template or screed, forcing the coarse aggregate below the surface. Creation of concave surfaces shall be avoided. After the concrete has been struck-off, the surface shall be thoroughly floated to the finished grade with a suitable floating tool. Aluminum and steel floats are not allowed.

Float finish, unless otherwise required, shall be given to all horizontal surfaces except those intended to carry vehicular traffic and those of curbs and sidewalks.

B. Structural Concrete Slab Structures – Include, but not limited to, structural concrete deck slabs, wearing surfaces, slabs on precast superstructures, top and bottom slabs of box culverts, approach slabs, rigid frame structures and simple slab spans, as applicable. Screed rails shall be set entirely above the finished surface of the concrete and shall be supported in a manner approved by the Resident. Where shear connector studs are available, welding to the studs will be permitted. No welding will be permitted directly on the stringer flanges to attach either screed rail supports or form supports of any type.

Screed rail supports set in the concrete shall be so designed that they may be removed to at least 50 mm [2 inches] below the surface of the concrete. Voids created by removal of the upper part of the screed rail supports shall be filled with mortar having the same proportions of sand and cement as that of the slab or wearing surface. The mortar shall contain an approved additive in sufficient proportions to produce non-shrink or slightly expansive characteristics.

The rate of placing concrete shall be limited to that which can be finished without undue delay and shall not be placed more than 10 feet ahead of strike-off.

The Contractor shall furnish a minimum of two work bridges behind the finishing operation, capable of spanning the entire width of the deck and supporting at least a 500 lb. load without deflection to the concrete surface, to be supported on the screed rails. These working bridges shall be used by the Contractor for touch-up and curing cover application and shall be available for inspection purposes. When the overall length of the structure is 60 feet or less only one working bridge will be required.

An approved bridge deck finishing machine complying with the following requirements shall be used, except as otherwise specified, for finishing structural concrete slab structures. The finishing machine shall have the necessary adjustments, built in by the manufacturer, to produce the required cross section, line and grade. The supporting frame shall span the section being cast in a transverse direction without intermediate support. The finishing machine shall be self-propelled and capable of forward and reverse movement under positive control. Provisions shall be made for raising all screeds to clear the screeded surface for traveling in reverse. The screed device shall be provided with positive control of the vertical position.

The finishing machine shall be self-propelled with one or more oscillating screeds or one or more rotating cylinder screeds. An oscillating screed shall oscillate in a direction parallel to the centerline of the structure and travel in a transverse direction. A rotating cylinder screed shall rotate in a transverse direction while also traveling in the same direction. Either type of screed shall be operated transversely in overlapping strips in the longitudinal direction not to exceed six inches. One or more powered augers shall be operated in advance of the screed(s) and a drag (pan type) float shall follow the screed(s). For concrete placements less than six (6) inches in depth, vibratory pan(s) having a minimum of 3000 vibrations/min shall be operated between the oscillating screed(s) or rotating cylinder screed(s) and the power auger(s). For concrete placed in excess of 3-1/2 inches but less than six (6) inches in thickness, hand- operated spud vibrators shall be used in addition to the machine vibratory pan(s).

The transversely operated rotating cylinder(s) of the bridge deck finishing machine shall be rotated such that the direction of the rotation of the cylinder(s) at the surface of the concrete is in accordance with the manufacturer's recommendations.

Concrete immediately in front of the power auger(s) of a bridge deck finishing machine shall be placed or cut to a depth no higher than the center of the rotating auger(s). The advance auger(s) shall strike-off the concrete to approximately 1/4 inch above the final grade. The concrete shall then be consolidated with the vibrating pan(s) and then finished to final grade.

A small handheld pan vibrator shall be required at edges and adjacent to joint bulkheads. In lieu of the handheld pan vibrator equipment, the Resident may approve small spud vibrator(s).

Lightweight, vibrating screeds may be used on slab structures which are more than 12 inches below the roadway finish grade or have a length of 30 feet or less, or where concrete placements are specified to be less than 16 feet in width and shall have the following features:

1. It shall be portable and easily moved, relocated, or adjusted by no more than four persons.
2. The power unit shall be operable without disturbing the screeded concrete.
3. It shall be self-propelled with controls that will allow a uniform rate of travel and by which the rate of travel can be increased, decreased or stopped.
4. It shall have controlled, uniform, variable frequency vibration, end to end.
5. It shall be fully adjustable for flats, crowns, or valleys.
6. The screed length shall be adjustable to accommodate the available work area.

When a lightweight vibrating screed is utilized, the concrete shall be placed or cut to no more than 1/2 inch above the finished grade in front of the front screed. The screed shall be operated such that at least three feet of concrete is in position in front of the screed.

Supporting slabs for bituminous wearing surfaces shall be finished in accordance with the recommendations of the waterproofing membrane manufacturer.

The texturing of concrete wearing surfaces shall be applied as approved by the Resident. The surface tolerance and texture shall be acceptable to the Resident, or the placement may be suspended until remedial action has been taken. The Resident may order the removal and replacement of material damaged by rainfall.

On all concrete wearing surfaces, a one foot wide margin shall be finished adjacent to curbs and permanent barriers with a magnesium float.

Immediately after screeding, floating and texturing, the surface of the concrete shall be tested for trueness, by the Contractor, with a 10 foot straightedge and all irregularities corrected at once in order to provide a final surface within the tolerance required in Table 5. The surface shall be checked both transversely and longitudinally. Any area that requires finishing to correct surface irregularities shall be retextured.

The straightedges shall be furnished and maintained by the Contractor. They shall be fitted with a handle and all parts shall be made of aluminum or other lightweight metal. The straightedges shall be made available for use by the Resident when requested.

In the event of a delay during a concrete placement, all concrete that cannot receive the final curing cover shall be covered with wet burlap.

No vehicles will be allowed, either directly or indirectly, on reinforcing steel before concrete placement.

C. Curb and Sidewalk Finish on Bridges - Curb and sidewalk finish is a float finish produced by using a short float moved in small circles to produce a shell-like pattern on the surface of the concrete. Alternately, sidewalks may receive a light broom finish perpendicular to the sidewalk.

When a concrete curb is monolithic with a sidewalk, a six inch wide smooth margin shall be made along the top of the curb with a magnesium float.

Unless shown on the Plans, the sidewalk area shall not be divided into sections by transverse grooves.

At all transverse construction and expansion joints, except where steel expansion dams are used, the edges of the joints, on the surface of the sidewalk, shall be finished with a sidewalk edging tool two inches in width with a 1/4 inch radius lip.

D. Form Surface Finish - The character of the materials used and the care with which forms are constructed and concrete placed shall be considered in determining the amount of rubbing required. If using first class form material, well-constructed forms and the exercise of special care, concrete surfaces are obtained that are satisfactory to the Resident, the Contractor may be relieved in part from the requirement of rubbing.

1. Ordinary Finish - An Ordinary Finish is defined as the finish left on a surface after the removal of the forms, the filling of all holes and the repairing of all defects. The surface shall be true and even, free from stone pockets and depressions or projections and of uniform texture. All formed concrete surfaces shall be given an ordinary finish unless otherwise specified.

   Repaired areas that do not meet the above requirements or areas that cannot be satisfactorily repaired to meet the requirements for ordinary finish shall be given a rubbed finish. When a rubbed finish is required on any part of a surface, the entire surface shall be given a rubbed finish.

2. Rubbed Finish - Rubbing of the concrete shall occur within seven days of the concrete placement. If rubbing of the concrete is not complete within seven days, the Contractor must apply a latex bonding agent to the concrete as submitted and approved by the Resident.

   The concrete shall be thoroughly saturated with water immediately before starting this work. Sufficient time shall have elapsed before wetting-down to allow the mortar used in ordinary finish to become thoroughly set. Surfaces to be finished shall be rubbed with a medium coarse carborundum stone, using a small amount of mortar on its face. The mortar shall be composed of cement and fine sand mixed in

proportions as used in the concrete being finished. Rubbing shall be continued until all form marks, projections and irregularities have been removed, all voids filled and a uniform surface has been obtained. A thin layer of paste produced by this rubbing shall be left on the surfaces.

After all concrete above the surface being treated has been cast, the final finish shall be obtained by a second rubbing with a fine carborundum stone using only water. This rubbing shall be continued until the entire surface is of a smooth texture and uniform color.

After the final rubbing is completed and the surface has dried, it shall be rubbed lightly with clean and dry burlap to remove excess loose powder and shall be left free from all unsound patches, paste, powder and objectionable marks. This finish shall result in a surface of smooth texture and uniform color.

No surface finishing shall be done in freezing weather or when the concrete contains frost. In cold weather the preliminary rubbing necessary to remove the inert sand and cement materials and the surface irregularities may be done without the application of water to the concrete surfaces.

The following portions of concrete roadway grade separation structures shall be given a rubbed finish unless otherwise indicated in the Contract:

(a) Retaining walls and the breast and wing walls of abutments - face surfaces to 12 inches below the finished ground line.
(b) Piers - all vertical surfaces and the underside of overhanging portions of caps, except that for overpass structures, the piers beyond the outside limits of the roadway pavement, the vertical surfaces on the back which are not visible from the roadway or sidewalk will not require a rubbed finish.
(c) Parapets and end posts – all horizontal and face surfaces, excluding overhead surfaces, to 12 inches below the finish ground.

If, in the opinion of the Resident, the general appearance of a concrete structure, due to the excellence of workmanship, cannot be improved by a rubbed finish, this requirement may be waived.

E. Surface Finish - After the concrete has cured, the surface shall be tested with a 10 foot straightedge or a lightweight profiler.

The straightedge shall be furnished and maintained by the Contractor. It shall be fitted with a handle and all parts shall be made of aluminum or other lightweight metal. The straightedges shall be made available for use by the Resident when requested. The lightweight profiler will be furnished by the Authority.

Areas found to not comply with the tolerance of Table 5 shall be brought into conformity by methods proposed by the Contractor and approved by the Resident at no additional cost to the Authority.

TABLE 5
SURFACE TOLERANCE LIMITS

Type of Surface:	* Maximum deviation of surface in millimeters [in.] below 3 m [10 ft.] straightedge
Concrete Wearing Surface, Curbs, Sidewalks, and Barriers	3 mm [1/8 in.]
Concrete Slab Surfaces to be Covered by Membrane Waterproofing or Concrete Wearing Surfaces	6 mm [1/4 in]
Concrete Slab Surfaces with Integral Concrete Wearing Surface	6 mm [1/4 in.]
Concrete Slab Surfaces to be Covered By Earth or Gravel	10 mm [3/8 in.]
Concrete Surface of Box Culvert Bottom Slab	10 mm [3/8 in.]
Concrete Surface of Abutments, Piers, Pier Shafts, Footings, and Walls	10 mm [3/8 in.]

* Allowance shall be made for crown, camber and vertical curve.

502.15 Curing Concrete

All concrete surfaces shall be kept wet with clean, fresh water for a curing period of at least seven days after concrete placing, with the exception of vertical surfaces as provided for in Subsection 501.10(D), Removal of Forms and False Work.

For concrete wearing surfaces and all concrete containing fly ash or slag, the temperature of the concrete shall be kept above 50˚F for the entire seven day period. All other concrete and its surfaces shall be kept above 50˚F for the first four days of the curing period and above 32˚F for the remainder of the period.

In the 24-hours following the end of the curing period, the temperature of the concrete shall be decreased on a gradual basis, not to exceed a total change of 40˚F for moderate sections, such as abutments and pier bents, and 30˚F for mass sections such as massive piers.

All slabs and wearing surfaces shall be water cured only and kept continuously wet for the entire curing period by covering with one of the following systems:

A. Two (2) layers of wet burlap;

B. Two (2) layers of wet cotton mats;

C. One (1) layer of wet burlap and either a polyethylene sheet or a polyethylene coated burlap blanket; or,

D. One (1) layer of wet cotton mats and either a polyethylene sheet or a polyethylene coated burlap blanket.

Except as otherwise specified, curing protection for slabs and wearing surfaces shall be applied within 30 minutes after the concrete is screeded and before the surface of the concrete

has lost its surface "wetness" or "sheen" appearance. The first layer of either the burlap or the cotton mats shall be wet and shall be applied as soon as it is possible. Polyethylene sheets shall not be placed directly on the concrete, but may be placed over the fabric cover to prevent drying.

The covering of concrete wearing surfaces, decks, curbs and sidewalks shall be kept continuously wet for the entire curing period by the use of a continuous wetting system and shall be located to insure a completely wet concrete surface for the entire curing period.

All other surfaces, if not protected by forms, shall be kept thoroughly wet either by sprinkling or by the use of wet burlap, cotton mats or other suitable fabric until the end of the curing period, except as provided for in 502.10(D), Removal of Forms and False Work. Polyethylene sheets shall not be placed directly on the concrete, but may be placed over the fabric cover to prevent drying.

Surfaces of all concrete placements containing silica fume additive shall be coated with an approved evaporation retardant immediately after finishing and texturing the concrete surface. The application of wet burlap or wet cotton mats shall be made within 15 minutes after the finishing of the concrete surface.

The application rate, the desired equipment, and the mixing and application procedures for an approved evaporation retardant shall be as designated by the manufacturer. Successive applications or heavier applications of this evaporation retardant shall be applied as necessary to retain the required surface "wetness" appearance.

502.16 Loading Structures and Opening to Traffic

No superstructure concentrated loads such as structural steel beams, girders and trusses shall be placed upon finished concrete substructures until the concrete has reached its design strength.

No load or work will be permitted on concrete superstructure slabs or rigid frame structures until concrete cylinders cured with the slab establish that design strength has been reached. However, after a shorter period of time, the Resident may permit handwork for form construction and setting stone bridge curb. No curbing or other materials shall be stored on the bridge during the seven day curing period, except that if handwork is permitted, curb stones may be stored in a line near to their final location until ready to be set.

Neither traffic nor fill material shall be allowed on superstructures of concrete bridges or culverts until concrete cylinders cured with the slab establish that design strength has been reached, dependent upon conditions as specified in Subsection 502.10 and with the approval of the Resident.

No traffic will be allowed on the cured concrete of a concrete wearing surface until 24-hours after the completion of the application of protective coating for concrete surfaces.

Concrete approach slabs at the end of structures may be opened to traffic or backfilled if buried when the design strength has been reached.

502.17 Bridge Drains and Incidental Drainage

All drains shall be accurately placed at the locations shown on the Plans or as approved by the Resident, and an adequate means provided for securely holding them in the required positions during the placing of concrete.

Bridge drains shall be galvanized in accordance with Subsection 711.04, Bridge Drains. The Contractor shall furnish an insulator between surfaces of galvanized and weathering steels when erecting the bridge drain support assembly. Epoxy-coated washers shall be used when the support assembly attaches to weathering steel beam webs.

Drains or weep holes through abutments and retaining walls shall be pipe of the size and shape shown on the Plans and shall be of Schedule 40 PVC pipe.

For the purpose of providing drainage for any moisture that may collect between the floor slab and the bituminous concrete roadway surface, approved one inch inside diameter plastic tube drains shall be installed at the low points of the slab surface, adjacent to the end dam or dams. The exact location will be determined in the field by the Resident and the discharge from them shall be such as to clear the bridge seats and any other portion of the structure in their proximity. The tops of the drains shall be depressed 3/8 inch below the surface of the slab and the outlets shall project two inches below the underside of the slab. Care shall be exercised such that the drains are open after the installation of the membrane waterproofing, when it is installed.

502.175 Miscellaneous Construction of Conduits and Anchor Bolts

All conduit materials and installation procedures shall follow the requirements of Section 626.03 through 626.033 of the MaineDOT Standard Specifications.

Before placing concrete, the required elbows of entrance conduits, reinforcement, and anchor bolts shall be carefully positioned. The anchor bolt size and the bolt circle diameter shall be determined from data furnished by the supplier of the poles or as shown on the Plans. Anchor bolts for use with breakaway couplings, longitudinally grooved-type, shall be 1 inch diameter and shall project between 2-1/2 and 3 inches above the top of the foundation. All other anchor bolts shall be a minimum of one inch diameter and shall project sufficiently to accommodate the thickness of the base plus all nuts and washers. The bolt length shall also be sufficient to allow clearances of approximately 1/2 inch below the leveling nut and 1/4 inch above the top nut. At least two threads on each anchor bolt shall project beyond the outside of the nuts holding the plumbed pole.

When the anchor bolt template is removed, the threads of the anchor bolts shall be greased and protected with a metal sleeve, held in position with nuts and washers to be furnished with the bolts. This thread protection shall remain in place until the pole or other equipment is installed.

A copper-clad steel ground rod shall be installed when shown on the Plans.

502.18 Method of Measurement

Structural concrete satisfactorily placed and accepted will be measured by the cubic yard, in accordance with the dimensions shown on the Plans or authorized changes in the Plans.

Structural Concrete for any irregular shapes may be measured by the cubic yard as determined from the theoretical yield of the design mix or in the case of transit mixed concrete, by delivery ticket as approved by the Resident.

The limits to be used in determining the quantities of the aforementioned structural concrete items will be as follows:

1. Structural Concrete, Pavement Slabs. The limits will be the entire cash lane roadway slab bounded transversely and longitudinally by the extreme ends or edges of existing concrete.
2. Structural Concrete, Plaza Island. The limits will be the entire concrete island including utility pits/vaults, outside to outside, both transversely and longitudinally, exclusive of curbing.

No deduction will be made for the volume of concrete displaced by structural steel, reinforcing steel, pile heads, expansion joint material, drains, chamfers on corners, inset panels of 1-1/2 inches or less in depth, pipes, weep holes and authorized openings for utilities of 1/4 yd^3 or less in volume, when any of these items occur in structural concrete which is to be paid for on a cubic yard basis.

502.19 Basis of Payment

The accepted work done under structural concrete, of the classes and for the types of work required, will be paid for at the Contract unit price per cubic yard for the respective Contract items involved. Payment for miscellaneous construction items such as asphalt for painting or covering various types of joints, all required sandblasting, bonding, curing, joint sealing, and joint sawing shall be incidental to the respective 502 pay items. No direct payment will be made for concrete admixtures with the exception of Synthetic Fiber Reinforcement, which shall be paid for under its respective Pay Item, 503.90.

Steel reinforcing and GFRP reinforcing will be measured and paid for separately as outlined in Section 503.

Implementation of the Quality Control Requirements and costs associated with acceptance test sampling shall be incidental to relative pay item.

Payment will be made under:

Pay Item		Pay Unit
502.262	Structural Concrete, Pavement Slabs	Cubic Yard
502.263	Structural Concrete, Plaza Islands, Bumpers and Curtain Walls	Cubic Yard
502.265	Structural Concrete, Utility Pits	Cubic Yard
502.266	Structural Concrete - Gantry Pedestals & Footings	Cubic Yard

SPECIAL PROVISION

SECTION 503

REINFORCING STEEL

(GFRP Reinforcing)

503.01 Description

The first paragraph is amended to read:

This work shall consist of fabrication, delivery and placing glass fiber reinforced polymer (GFRP) reinforcement in accordance with these Specifications and in conformance with the Plans, General Provisions and Special Provisions.

503.02 Materials

The following paragraphs are added:

Materials shall meet the following requirements:

All GFRP reinforcement shall conform to the requirements shown in AASHTO Bridge Design Guide Specifications for GFRP - Reinforced Concrete Bridge Decks and Traffic Railings (November 2009), except as shown on the Plans, and as stated herein. All GFRP reinforcement bar shall be deformed or sand coated.

GFRP bars shall be from one of the following approved manufacturers:

1. Aslan 100 by Hughes Brothers Inc.
2. V-Rod by Pultrall Inc.
3. ComBAR by Schoeck Bauteile.
4. Mateen-Bar by Sigma Development Group, LLC.

All GFRP bars in the same structural component shall be supplied by the same manufacturer.

Documentation

For all GFRP reinforcement bar used on Authority projects, the bar manufacturer shall furnish the Resident with one hardcopy and one electronic copy of written certifications that the GFRP reinforcement meets the requirements of this specification. In addition, the certification shall list the test values and test procedures used to determine the physical properties of the GFRP reinforcement. Certifications bearing the notarized signature of a responsible authorized representative of the bar manufacturer are required. Each bundle of GFRP reinforcement shall be identified with a corresponding lot number with the lot numbers affixed to each bundle by means of a durable tag.

Repair Material

The material used to repair the cut ends of GFRP reinforcement shall comply with the requirements established by the bar manufacturer.

503.04 Protection of Material

The following paragraphs are added:

Delivery, storage and handling of GFRP reinforcing bars shall be in accordance with these Specifications. Prevent bending, coating with earth, oil, or other material, or otherwise damaging the reinforcement. When handling reinforcement, use equipment to avoid damaging or abrading the bar. Do not drop or drag reinforcement.

GFRP reinforcement shall be stored on skids or other supports a minimum of 12 inches above the ground surface and protected at all times from damage and surface contamination. The storage supports shall be constructed of wood, or other material that will not damage the surface of the reinforcement. Bundles of bars shall be stored on supports in a single layer. Each bundle shall be placed on the supports out of contact with adjacent bundles. Reinforcing bars expected to be stored outdoors for a period in excess of two months, shall be protected from ultraviolet radiation. Prevent exposure of reinforcing to temperatures above 120 degrees Fahrenheit during storage.

All handling of reinforcing bars by mechanical means shall be done by equipment having padded contact areas, or by the use of nylon webbing slings. The use of chains or wire rope slings shall not be allowed, even when used with padding. All bundles of bars shall be lifted with a strong back, spreader bar, multiple supports or a platform bridge to prevent bar-to-bar abrasion from sags in the bundles. Support points during lifting or transporting of bundled reinforcing bars shall be spaced at a maximum of 15 feet, or as required by the manufacturer, whichever is more restrictive.

Bundled bars shall be strapped together with non-metallic or padded straps in a manner to prevent bar-to-bar abrasion due to relative movement between bars.

Bars loaded for transport shall be loaded and strapped down in a manner that will prevent damage from motion and vibration, to the greatest extent possible. Bundles of bent bars shall be transported strapped to wooden platforms or shall be crated. All individual bundles and layers of bundles shall be separated, and supported by dunnage.

Individual bars shall be handled in a manner that prevents damage due to abrasion or impact, and at no time shall any bar be moved by dragging over any surface, including other reinforcing bars. Sufficient personnel shall be assigned to assure compliance with the above.

For GFRP bars the maximum total visible damage permitted on each linear foot shall not exceed two percent of the surface area in that linear foot of bar. The depth of the permissible damage shall not exceed 0.04 inches.

503.06 Placing and Fastening

The following paragraphs are added:

All reinforcement shall be accurately placed in the positions shown on the Plans and shall be firmly held there during the placing and setting of the concrete. Immediately before placing concrete the reinforcement shall be free from all foreign material which could decrease the bond between the reinforcing and concrete. Such foreign material shall include, but not be limited to: dirt, paint, oil, bitumen and dried concrete mortar.

Reinforcing bars within the formwork shall be secured to prevent movement during concrete placement. The bars must be adequately supported or tied to resist settlement, floating upward, or movement in any direction during concrete placement.

Field bending of GFRP shall not be allowed.

Field cutting of GFRP will be permitted only with the approval of the Resident. The field cutting shall be with a high speed cutter, fine blade saw, diamond blade or masonry saw. The GFRP bars shall not be shear cut.

Proper distances from the forms shall be maintained by means of stays, blocks, ties, hangers or other approved means. Blocks used for this purpose shall be precast Portland cement mortar blocks of approved shape and dimensions. Chairs may be used for this purpose and, when used, must be GFRP or plastic. The use of pebbles, pieces of broken stone or brick, metal pipe or wooden blocks shall not be permitted. The placing of reinforcement as concrete placement progresses, without definite and secure means of holding the bar in its correct position, shall not be permitted. Reinforcing bars used as support bars and spreader bars shall be the same type used for the main reinforcing.

Bars shall be fastened together at all intersections except where spacing is less than one foot in either direction, in which case, fastening at alternate intersections of each bar with other bars will be permitted providing this will hold all the bars securely in position. This fastening may be plastic or nylon ties only.

Minimum embedment lengths of reinforcing bars shall comply with the manufacturers published recommendations for the anchoring material selected. These embedment lengths shall be verified by the Resident before installation of the reinforcing bars. The reinforcing bar lengths indicated on the Plans may be reduced, at the Contractor's option, to the determined minimum embedment lengths.

Reinforcement shall be inspected and approved by the Resident before any concrete is placed.

503.07 Splicing

The following sentence is added:

Lap splice length for GFRP bars shall be as per manufacture’s recommendation.

503.10 Method of Measurement

The first sentence of the first paragraph is amended as follows:

GFRP reinforcing bars shall be measured by the computed number of pounds of reinforcement authorized.

503.11 Basis of Payment

The following is added:

The accepted quantity of GFRP reinforcing will be paid for at the Contract unit price per pound for each item involved, completed, and accepted.

Pay Item		Pay Unit
503.18	Glass Fiber Reinforced Polymer (GFRP) Reinforcing Bars, Fabricated and Delivered	Pound
503.19	Glass Fiber Reinforced Polymer (GFRP) Reinforcing Bars, Placing	Pound

SPECIAL PROVISION

SECTION 503

REINFORCING STEEL

(Synthetic Fiber Reinforcement)

The following Subsection shall be added:

503.01 Description

This work shall consist of furnishing synthetic fiber reinforcement to be used as temperature and shrinkage reinforcement in the structural concrete pavement slabs.

503.02 Materials

The following sentence shall be added:

Synthetic fibers shall be STRUX 90/40 as manufactured by W. R. Grace & Co. or an approved equal.

The following Subsection shall be added:

503.03 Dosage

The dosage rate for synthetic fibers shall be five lbs per cubic yard of concrete.

503.10 Method of Measurement

The following sentence shall be added:

Synthetic fiber reinforcement will be measured by the pound.

503.11 Basis of Payment

Payment will be made under:

Pay Item		Pay Unit
503.90	Synthetic Fiber Reinforcement	Pound

SPECIAL PROVISION

SECTION 506

FIELD COATING APPLICATION

506.01 Description

This specification covers the field cleaning and painting of existing components at the Interchange 32, Interchange 36, and Interchange 46 (northbound) toll plazas. The following areas are required to be cleaned and painted:

Interchange 32: All remaining canopy support structures (one structure per booth), canopy underside, canopy structural members, and toll booth steel trim with a cleanliness level of SSPC-SP 2 and all areas of corrosion, deteriorated paint, and other detrimental foreign matter on these components to a SSPC-SP 3 condition.

Interchange 36: All remaining canopy support structures (one structure per booth), canopy underside, canopy structural members, and toll booth steel trim with a cleanliness level of SSPC-SP 2 and all areas of corrosion, deteriorated paint, and other detrimental foreign matter on these components to a SSPC-SP 3 condition.

Interchange 46 (northbound): All remaining canopy support columns (one column per booth), with a cleanliness level of SSPC-SP 2 and all areas of corrosion, deteriorated paint, and other detrimental foreign matter on these components to a SSPC-SP 3 condition.

The work shall consist of furnishing all supervisory personnel, competent person(s), labor, tools, equipment, containment, scaffolding, protection of public and private property, Quality Control activities, materials, and incidentals necessary for satisfactory completion of the Work.

If applicable, all lead abatement requirements shall be in compliance with current Local, State, and Federal regulations, the requirements of Subsection 105.2.4.2 Lead Paint, Special Provisions 506.08(E) Hazardous Waste Management Plan, 506.70 Containment System and Disposal of Hazardous Materials, and 506.80 Lead Health Protection.

Appendix B - Lead Paint Assessment, is included in this Contract for informational purposes.

In reference to surface preparation, cleanliness, coating application, containment measures, and hazardous waste management, the Contractor shall have the latest copies of the following reference on-site at all times:

1. Steel Structures Painting Council's Steel Structures Painting Manual, Volumes 1 and 2 (Good Painting Practice and Systems and Specifications).
2. SSPC-VIS 3, Visual Standard for Power and Hand-Tool Cleaned Steel.
3. SSPC Guide 6, Guide for Containing Surface Preparation Debris Generated During Paint Removal Operations.

4. SSPC Guide 7, Guide to the Disposal of Lead-Contaminated Surface Preparation Debris.
5. Maine Department of Environmental Protection's "Hazardous Waste Management Rules".
6. Maine Department of Environmental Protection – Handbook for Hazardous Waste Generators.
7. OSHA 29 CFR Part 1910 "Occupational Safety and Health Standards" and Part 1926 "Safety and Health Regulations for Construction".
8. OSHA 40 CFR Part 264 "Hazardous Waste Contingency Plan".
9. OSHA 42 CFR Part 84 "Respiratory Protective Devices".

All surface preparation, containment, and field painting included in the Contract shall be sequenced to accommodate maintenance of traffic in accordance with Section 652 Maintenance of Traffic, Subsection 107.4.7 Limitations of Operations, and as shown in the Maintenance of Traffic Plans.

506.02 Materials

Materials shall comply with the requirements of the respective Subsections of this Specification.

506.03 Submittals

Contractor shall submit the following for review to the Resident:

- Contractor's Certifications
- Quality Control Plan
- Surface Preparation / Painting Plan
- Material Safety Data Sheets
- Containment Plan
- Hazardous Waste Management Plan
- Environmental Protection Plan
- Health and Safety Plan
- SPCC Plan
- Finish coat color sample per 506.21 Materials
- All other documentation as specified herein

506.05 Inspection

For the purpose of this Specification, the following definitions shall apply:

Quality Assurance Inspector (Q.A.I.): The Authority's authorized representative for field inspection.

Quality Control Inspector (Q.C.I.): The Contractor's authorized representative for field surface preparation and application.

Quality Control (Q.C.) is the responsibility of the Contractor. The Q.C.I. shall inspect all aspects of the work and shall supervise required testing. The Q.C.I. shall record measurements and test results in a Job Control Record (JCR). The Q.C.I. shall reject materials and

workmanship that do not meet Contract requirements. The results of all testing shall be documented and a copy made available to the Q.A.I. on a daily basis or as requested by the Resident or Q.A.I.

The JCR shall include the following typical testing requirements, as applicable:

- Surface Preparation Cleanliness and Anchor Profile - before application of the first or primer coat.
- Environmental conditions - Ambient temperature, surface temperature, relative humidity, and dew point prior to the application of each coat and at the conclusion of final coating application of the work shift.
- Dry Film Thickness (DFT) - After the coating has cured and before the application of any subsequent coating.
- Type of testing equipment, model, serial number and calibration data, if applicable.
- Type of application equipment.
- Type of containment, when required.
- Coating batch and/or lot number, date of manufacture, and shelf life.
- Manufacturer's certification of conformance.
- Name(s) of applicator(s).
- Cure data, cure times, temperature, and relative humidity.
- Final inspection by the Q.C.I. and acceptance by the Resident or Q.A.I.

Quality Assurance (Q.A.) is the prerogative of the Authority. The Q.A.I. will ensure that the Q.C. is being performed properly, verify documentation, periodically inspect workmanship, and witness testing. Q.A. testing deemed necessary by the Resident in addition to the minimum test requirements shall be scheduled to minimize interference with the production schedule.

506.06 Quality Assurance Inspector's Authority

The Q.A.I. will have the authority to reject material or workmanship that does not meet the Contract requirements. The acceptance of material or workmanship by the Q.A.I. will not preclude subsequent rejection, if materials or workmanship is found unacceptable, by other authorized representatives of the Authority.

506.07 Rejections

Rejected material or workmanship, as described above, shall be corrected or replaced by the Contractor at no additional cost to the Authority.

506.08 Contractor Qualification

All Contractors and Subcontractors involved in the cleaning and removal of existing painted surfaces shall be certified in accordance with SSPC-QP 2 "Standard Procedure for Evaluating the Qualifications of Painting Contractors to Remove Hazardous Paint".

All Contractors and Subcontractors involved in the field application and touch-up of the steel coating system shall be certified in accordance with SSPC-QP 1 "Standard Procedure for Evaluating Qualifications of Painting Contractors: Field Application to Complex Structures".

All Contractor and Subcontractor SSPC certifications specified above shall be current and in-place prior to bid opening. The Contractor shall ensure that all required SSPC certifications are kept current throughout the duration of the Contract until final acceptance of the work. A copy of valid current certifications shall be transmitted with the Bid Package.

A) Quality Control Personnel Qualifications:

The Contractor's Quality Control personnel shall have successfully completed the National Association of Corrosion Engineers (NACE) Coating Inspector Program (CIP) Level 1, 2 and 3 – Peer Review training, with certifications in current standing, or shall provide evidence of successful inspection of three projects of similar size and scope that have been completed in the last two years. References shall include the name, address, and telephone number of a contact person employed by the bridge owner. The personnel performing the Quality Control tests shall be trained in the use of the Quality Control instruments. Documentation of training shall be provided to the Resident.

If the Quality Control personnel the Contractor engages for the Project does not follow and enforce the approved Quality Control Plan, the Resident may require the Contractor to retain the services of an independent, third party certified NACE inspector for the remainder of the Project, at no additional cost to the Authority.

B) Quality Control Plan:

The Contractor shall submit a Quality Control Plan (QCP) to the Resident for review a minimum of 21 days prior to initiating any removal of paint from the existing toll plaza(s). The Quality Control is the responsibility of the Contractor to ensure compliance with the Contract documents. The QCP shall, at a minimum, include the names of all the Contractor's representatives on-site, who shall be responsible for the inspection, and the acceptance of the Contractor's work prior to inspection by the Resident. The plan shall also define hold points, submittals of Job Control Records, coating / DFT reports and the process for rework. Inspection by the Contractor's representative shall be incidental to the surface preparation.

The Contractor shall adhere to the approved QCP at all times. Violation of the QCP, including failure to submit daily work reports and/or coating and DFT reports, may result in a suspension of work. If suspension is ordered in writing by the Resident, work shall not resume until the Contractor provides a plan in writing, which is acceptable to the Resident, describing how compliance will be restored and maintained. A suspension resulting from the Contractor's failure to adhere to the approved QCP shall be at no additional cost to the Authority and shall not be cause for a time extension of the Contract.

C) Surface Preparation / Painting Plan:

The Contractor shall submit to the Resident for review, written procedures for the surface preparation, remediation of soluble salts, coating application, and coating touch-up/repair. This plan shall include a description of the equipment that will be

used for surface preparation and painting. This plan shall also include the surface preparation methods to be used in "sensitive areas" (e.g., "EZ Pass" equipment, utilities, lighting fixtures, galvanized surfaces, galvanized conduit, galvanized conduit supports etc.). If any of the areas that are determined to be "sensitive" by the Resident receive damage due to any work operations, the Contractor shall be responsible for all damage at no additional cost to the Authority. The Contractor shall receive approval from the Resident before performing work adjacent any "sensitive areas".

This plan shall address methods for sequencing work to accommodate Maintenance of Traffic in accordance with Section 652 Maintenance of Traffic, Subsection 107.4.7 Limitations of Operations, and as shown in the Maintenance of Traffic Plans.

This plan shall also identify the methods of protection or work isolation procedures that will be followed to protect surrounding structures, toll equipment, utilities, and property of the Authority from exposure to surface preparation and paint debris. The Contractor is responsible for any damage caused by the surface preparation.

The Contractor shall submit the manufacturers' product data sheet(s) for the specified protective coating system in the submission to the Resident.

D) Containment and Environmental Plan:

At least two weeks prior to starting the surface preparation and/or painting of the structure, the Contractor shall submit the proposed Containment Plan to the Resident for review. The Containment Plan shall address the Contractor's proposed containment and pollution control measures for each work zone phase of the containment systems attached to the toll plaza canopy, framing members, and/or toll booths. Containment enclosures shall meet the requirements of SSPC Guide 6 Class 3P. Containment walls used to separate the lane closure work zone from the traveling public and toll plaza employees shall be fastened securely so that they do not billow more than six inches from the vertical. All interfaces between the containment and toll plaza components shall be constructed as necessary to prevent any debris from exiting the containment during cleaning operations.

As soon as the containment installation begins, the Contractor shall immediately provide full 24/7 access for emergency egress for toll plaza personnel from both sides of the operational toll booth(s), while maintaining the integrity of the containment system once installation is complete. Access configuration and functionality shall be approved by the Resident before containment installation continues.

The Contractor shall submit a plan and drawings for the installation, moving, and removal of the containment enclosure, as well as the means and methods of providing and maintaining emergency access. The Containment Plan shall address methods for sequencing work to accommodate maintenance of traffic in accordance with Section 652 Maintenance of Traffic, Subsection 107.4.7 Limitations of Operations, and as shown in the Maintenance of Traffic Plans.

The erection of containment enclosure(s), or conducting any paint removal activities, shall not begin until the Resident has reviewed the Containment Plan and authorized the Contractor to begin work.

The Contractor is responsible for ensuring the containment meets all OSHA, Federal and State regulations.

All equipment placement and work shall be in strict conformance with Section 652 Maintenance of Traffic.

E) Hazardous Waste Management Plan:

A minimum of two weeks prior to undertaking the removal of existing coatings, the Contractor shall submit a Hazardous Waste Management Plan (EPA/DEP) to the Resident outlined below which, if applicable, shall include the requirements of Subsection 105.2.4.2 Lead Paint.

Procedures used for management and disposal of any lead paint and associated hazardous materials shall conform to the latest requirements of SSPC Guide 7 "Guide for the Disposal of Lead-Contaminated Surface Preparation Debris", and all Federal, State, and local requirements. The Contractor shall have a copy of the SSPC Guide 7 available on-site at all times. The Contractor shall also have a copy of the Maine Department of Environmental Protection's (DEP's) Handbook for Hazardous Waste Generators, and a copy of the State of Maine Hazardous Waste Management Rules, 06-096 CMR Chapters 850-857, on-site at all times.

Plans and drawings of the Hazardous Waste Management Plan shall be prepared and stamped by a Professional Engineer licensed in the State of Maine.

The Contractor shall have aid agreements with the local fire department, police department, hospital, and hazardous waste spill responder for each town. Copies of these agreements shall be provided to the Resident prior to generating any waste, in conformance with DEP Rules, Chapter 851, Section 13, Part C (7)(c)(ii) and OSHA 40 CFR Part 264.37.

See Subsections 506.70 through 506.72 for additional requirements.

G) Health and Safety Plan:

A minimum of two weeks prior to performing any work on the toll plaza(s), the Contractor shall submit to the Resident a written site-specific Health and Safety Plan. If applicable, the plan shall conform to the requirements of Subsection 105.2.4.2 Lead Paint.

Failure of the Contractor or Subcontractors to comply with the provisions for the Health and Safety Plan defined in this Specification will affect whether the Contractor or Subcontractors will be considered a responsible Contractor or

Subcontractor on future work involving structure rehabilitation and removal of hazardous paint coatings on projects for the Maine Turnpike Authority.

H) Spill Prevention Control and Countermeasure Plan:

Prior to the start of construction, the Contractor shall submit a Spill Prevention Control and Countermeasure (SPCC) Plan in accordance with the requirements of Subsection 105.8.1 Temporary Soil Erosion and Water Pollution Control.

506.09 Thru 506.19 Vacant

COATING SYSTEMS

506.20 Description

Work shall consist of the field application of coating systems in accordance with the Plans and Specification. Each coat shall be applied in accordance with the manufacturer's product data sheet and this Specification.

506.21 Materials

FIELD COATING SCHEDULE

One of the following coating systems shall be used. Alternately, an equivalent system may be proposed and used by the Contractor, subject to approval by the Authority:

Manufacturer:	The Sherwin Williams Company
Primer:	Corothane I PrePrime moisture-cure urethane
Intermediate:	Corothane I MIO Aluminum moisture-cure urethane
Finish:	Corothane I HS moisture-cure urethane

Manufacturer:	Wasser Corporation
Primer:	MC Miozinc 2.8 moisture-cure urethane
Intermediate:	MC Miomastic 2.8 moisture-cure urethane
Finish:	MC Shieldcoat 2.8 moisture-cure urethane

Manufacturer:	Xymax Coatings, Inc.
Primer:	Mono Lock PP moisture-cure polyurethane
Intermediate:	Mono Ferro PUR moisture-cure polyurethane
Finish:	Bridge Finish moisture-cure polyurethane

All three coats of the paint system shall be contrasting colors as follows:

Primer:	Default by the manufacturer
Intermediate:	Light gray as approved by the Resident
Finish:	“Toll Booth Dark Blue” Color formula to be provided by the Resident

The Contractor shall provide a dried sample of the specified finish color to the Authority for approval prior to the batching and delivery of the finish coat. Sample size, shape, and material shall be agreed upon with the Resident prior to submission.

The Contractor shall provide the paint batch description, lot number, date of manufacture, shelf life, and the manufacturer's published storage requirements to the Resident. The Contractor shall provide the manufacturer's product data sheet for each coating. The product data sheets shall include the manufacturer's recommended requirements for the equipment, surface cleanliness, mixing, thinning, application, environmental conditions, touch-up/repair procedures, and cure times for the entire range of allowable environmental conditions. All product data sheets and MSDS shall be submitted to the Resident for approval prior to initiating any coating work.

The product data sheets shall also provide the minimum and maximum recoat times for the primer and intermediate coat over the expected range of temperatures, relative humidity, and range of acceptable dry film thicknesses. The manufacturer's product data sheets at the time of submission shall be those used during the duration of the Project. Newly published product data sheets may be substituted as approved by the Resident.

506.22 Limits of Work

RESERVED

506.23 Surface Preparation

The following SSPC cleanliness levels are required for this work:

Interchange 32: All remaining canopy support structures (one structure per booth), canopy underside, canopy structural members, and toll booth steel trim with a cleanliness level of SSPC-SP 2 and all areas of corrosion, deteriorated paint, and other detrimental foreign matter on these components to a SSPC-SP 3 condition.

Interchange 36: All remaining canopy support structures (one structure per booth), canopy underside, canopy structural members, and toll booth steel trim with a cleanliness level of SSPC-SP 2 and all areas of corrosion, deteriorated paint, and other detrimental foreign matter on these components to a SSPC-SP 3 condition.

Interchange 46 (northbound): All remaining canopy support columns (one column per booth), with a cleanliness level of SSPC-SP 2 and all areas of corrosion, deteriorated paint, and other detrimental foreign matter on these components to a SSPC-SP 3 condition.

Solvent clean all surfaces as necessary with clean rags to remove dirt, grease, oil, and other foreign matter in accordance with SSPC-SP 1 before employing surface preparation methods. Pressure washing is not permitted.

Surface preparation cleanliness levels as stated above for these areas shall be the minimum unless a higher standard of surface cleanliness is required by the manufacturer's product data sheet. SSPC-VIS 1 shall be used to determine acceptable surface cleanliness.

The tools used to remove these corrosion products shall be identified in the submittals and accepted by the Resident. If the surface preparation or removal of rust results in nicks or gouges, the work will be suspended by the Resident. The Contractor shall demonstrate that the necessary adjustments have been made to prevent a reoccurrence of the damage prior to resuming work.

The Contractor shall remove and properly dispose of any latent concrete from prior toll plaza structural work, accumulated winter sand/salt, bird droppings, dirt, grease, oil, asphalt coatings, and debris from all areas to be prepared and painted prior to undertaking any paint removal or surface preparation operations. Removal and disposal of existing debris and foreign matter as described above shall be considered incidental to the Surface Preparation.

Chloride and ferrous salts may be present on the existing surfaces to be cleaned and painted, especially where corrosion is present. Prior to painting these surfaces, these salts must be reduced to acceptable levels. The Contractor shall verify that residual soluble salts on the canopy support columns are at a surface cleanliness condition of SC-2 or better, in accordance with SSPC-SP 12, as determined by the KTA SCAT Kit, Chlor-Rid Test, or an approved equal. Acceptable level thresholds are:

- Chloride < 7 µg/cm²
- Ferrous Ion < 10 µg/cm²
- Sulfate < 17 µg/cm²

Test for chlorides after surface preparation at the following frequency, unless approved otherwise: Two tests per toll booth work zone. Test locations are to be approved by the Resident or Q.A.I.

If unacceptable levels of soluble salt remain, the Contractor shall clean the affected areas in accordance with SSPC-SP 1 until acceptable results are achieved. All testing and retesting shall be incidental to the Surface Preparation and shall be at no additional cost to the Authority and shall not be just cause for a time extension. The Contractor shall describe the proposed method(s) of soluble salt remediation, and other contamination in the Surface Preparation / Painting Plan.

After surface preparation, the surface shall be visually inspected by the Q.C.I. and Q.A.I. for fins, tears, delaminations, and other unacceptable discontinuities. Unacceptable discontinuities shall be removed with a grinder or other suitable power tool and the area shall be blended at a slope of approximately 1:20.

Prior to the first coat or primer application, all steel surfaces to be painted shall be cleaned of dust and debris by vacuum method. Surface blow down with compressed air will not be permitted.

The allowable time between the SSPC-SP 3 power tool cleaning and primer application shall not exceed the manufacturer's published recommendations or eight hours, whichever is less.

506.24 Application

The Contractor shall provide adequate protection to the local environment, traveling public, and toll plaza employees from the application of the coating. Only brush and roller application is allowed or as recommended by the manufacturer. Application by spray will not be permitted.

The Q.A.I. shall witness the mixing and thinning of the coatings. Failure to notify the Q.A.I. shall result in the coating being rejected.

Thinning and mixing of coatings shall be in conformance with the manufacturer's product data sheet and shall be in conformance with all Local, State and Federal VOC regulations. Thinner shall be measured using a graduated cup or other container that clearly indicates the amount of thinner being added. Mixing shall be done using the method, equipment, and time recommended by the coating manufacturer.

The Q.C.I. shall record the batch and lot numbers of the coating, the type and amount of thinner used, and the time and pot life of the coating. The Q.A.I. shall confirm that the record is correct.

Coating equipment including mixers, rollers, and brushes shall meet the recommendations of the manufacturer's product data sheet.

Surfaces to be painted that are adjacent to concrete, canopy underside panels, traffic signs, roof light fixtures, traffic (red/green) light fixtures, toll booths, and "EZ Pass" equipment, shall be masked off to provide a neat appearance when painted. Acceptability of the masking procedure shall be at the discretion of the Resident.

The environmental conditions in the immediate vicinity of the steel to be coated shall be within the ranges in the manufacturer's product data sheet during the coating operation and during the cure period. Ambient temperature, surface temperature, relative humidity, and dew point shall be measured and recorded by the Q.C.I. The Q.A.I. may perform environmental testing in addition to the testing performed by the Q.C.I. If there are differences between the test results, the differences shall be resolved or explained to the satisfaction of the Resident prior to coating application. The results of the environmental testing shall be recorded in the JCR.

Cure and recoat times shall be in accordance with the manufacturer's product data sheet for the environmental conditions at the time of application and cure and recorded in the JCR. The Contractor shall provide the cure and recoat times for the environmental conditions in the immediate vicinity of the coated product. The cure times with coinciding environmental condition requirements shall be provided on the product data sheet or be authorized in writing by a technical representative of the coating manufacturer.

If the coating becomes contaminated with dust, debris, over spray, or other deleterious material, the surface shall be solvent cleaned in accordance with SSPC-SP 1 prior to any

subsequent coating applications. Other methods of cleaning may be used if approved by the Resident. Areas exhibiting trapped fiber or bristles shall be rejected.

The Q.A.I. shall be given ample notice and time in order to inspect the product prior to coating, recoating, or removal of paint from unacceptable areas. Substrates that are primed or surfaces that are recoated without notification of the Q.A.I. shall be rejected and no further coating shall be performed. Coating applied without notification of the Q.A.I. may be investigated by destructive and non-destructive testing as directed by the Resident and by a review of the JCR. The Resident may reject, conditionally accept, or accept the coating based on documentation and test results. Rejected coating shall be removed and re-applied. Conditionally accepted coatings shall be made acceptable as directed by the Resident. The cost of additional testing and repairs shall be borne by the Contractor.

506.25 Dry Film Thickness

DFT shall be measured in accordance with SSPC-PA 2. The results shall be documented in the JCR. The JCR documentation shall include the actual gage readings, spot average and the location(s).

506.26 Coating Repairs and Touch-up

Repairs and touch-up shall be done in accordance with the manufacturer's product data sheet and this Specification. Areas to be touched-up shall be prepared to assure proper adhesion of each coat. Each existing coat shall be feathered back to assure that each touch-up coat is continuous with each corresponding existing coat. Environmental conditions, cure times, and DFTs shall be in accordance with manufacturer's product data sheet for the coating being applied. Repairs to the topcoat shall be smooth and result in a uniform gloss and color match. The Resident shall have final authority concerning acceptable appearance.

506.27 Handling and Storage

No coating material, coating equipment, or cleaning equipment shall be stored within the limits of the toll plaza as directed by the Resident.

506.28 Observed Steel Defects

If any cracks or section loss in the existing steel are found during cleaning or painting operations, the Contractor shall immediately notify the Resident. The Contractor shall not work on the area in question until the Contractor has received the Resident’s approval.

506.29 Through 506.69 Vacant

CONTAINMENT SYSTEM AND DISPOSAL OF HAZARDOUS MATERIALS

506.70 Description

The containment enclosure shall meet the criteria for Class 3P containment classification of SSPC Guide 6, Guide for Containing Debris Generated during Paint Removal Operations.

The Contractor shall comply with all applicable Local, State and Federal laws, ordinances, and rules and regulations relating to the prevention of and/or abatement of pollution. The Contractor shall use all necessary means to prevent new pollution of the environment (air, soil, and water) in the project area and the areas immediately adjacent to the project area.

506.71 Hazardous Materials

A Hazardous Waste Management Plan shall be prepared in accordance with Special Provision Section 506.08(E) Hazardous Waste Management Plan. Potential hazardous material and pollutants such as fresh paint, old paint chips, cleaning debris, chemicals, fuels, lubricants, bitumen, and any other harmful or toxic material shall be contained and disposed of in such manner and in such place as will conform with all applicable Local, State, and Federal regulations governing the disposal of such materials.

It shall be the Contractor's responsibility to provide documentation to the Resident that all hazardous or toxic materials were disposed of in an acceptable manner. The documentation shall consist of truck manifests, weigh-bills, or such other documentation that may be acceptable to the Resident. The documentation shall show the method and site used and the quantity of material disposed of.

Prior to starting the surface preparation and/or coating application, the Contractor shall submit the proposed containment and pollution control measures for the Resident's review. The proposal shall be sufficiently detailed to show that conformance with the requirements specified herein or elsewhere in the Contract will be achieved. See Special Provision 105.2.4.2, 506.08(D) and 506.08(E) for additional requirements.

Hazardous waste or toxic materials shall not be placed or accumulated on unprotected ground or released into waters of the State. Work areas shall be adequately shielded at all times to prevent dispersion of debris by wind or rain. All of the Contractor’s equipment and storage areas used for the handling and storage of hazardous waste and hazardous materials shall be placed on an impervious surface in accordance with MaineDEP’s Handbook for Hazardous Waste Generators. Any evidence of improper storage and handling shall be cause for immediate suspension of work in progress, and work will not be allowed until corrective actions are taken. Emergency procedures to be taken in the event of a release of hazardous material to the environment shall be part of the Contractor’s Spill Prevention, Control and Countermeasures Plan that is required in accordance with Subsection 105.8.1 Temporary Soil Erosion and Water Pollution Control.

Non-compliance may expose the Contractor to fines assessed by DEP/EPA for failing to comply with Local, State, and Federal regulations. The Contractor shall not be granted additional Contract time for suspensions of work due to non-compliance.

506.72 Containment Enclosure

The Containment enclosure(s) shall meet the criteria for Class 3P containment classification of SSPC Guide 6, Guide for Containing Debris Generated during Paint Removal Operations and shall be in conformance with the requirements of this Section and Subsection 506.08(D) Containment and Environmental Plan.

The Contractor's choice of equipment or system used for the collection of the paint removal and cleaning debris will be reviewed by the Resident for health and safety, probable environmental impact, and to determine the suitability for the intended purpose.

Personnel working in a containment system may be exposed to health hazards. The Contractor shall be responsible for supplying adequate protection for all personnel required to be in the containment system. See Subsections 506.80 through 506.82 for specific requirements.

If the Resident deems emissions from the containment enclosure are unacceptable, all cleaning or painting operations shall cease until the problem is resolved.

Cleaning or painting materials, drips, or any form of construction debris from the cleaning and painting operations are not allowed to touch any vehicles of the traveling public. The Authority may restrict, prohibit, or require changes to the Contractor's means and methods if in the Resident's judgment they will not be or by demonstration are not effective in protecting the traveling public.

506.74 through 506.79 Vacant

LEAD HEALTH PROTECTION

506.80 Description

The Contractor is fully responsible for the protection of their employees, their Subcontractor's employees, and Authority personnel and their representatives from exposure to hazardous materials under OSHA regulations.

If applicable, the Contractor shall include requirements specified in Subsections 105.2.4.2 Lead Paint and 506.08(G) Health and Safety Plan into the Health and Safety Plan submittal.

Typical work tasks that pose a lead exposure risk consist of, but are not necessarily limited to, welding, burning paint, flame cutting, abrasive blast cleaning, grinding, chipping, needle gun cleaning, lead burning, manual scraping and sanding, manual demolition of structures, heat gun cleaning, peening on existing structural steel, abrasive blast cleaning debris cleaning, using lead containing mortar, abrasive blasting enclosure movement and removal, power tool cleaning, lead removal equipment cleaning, decontamination trailer cleaning, rehabilitation of existing structural steel, gouging, and rivet busting.

All Projects where employee lead exposure without regard to the use of respirators, may exceed the action level, that is employee exposure to an airborne concentration of lead of 50 micrograms per cubic meter of air (50 μ g/m^3) averaged over an eight hour period (i.e., removal of paint containing lead, etc.) must have a decontamination facility and hand-wash facility on-site and available for use by the designated staff.

Authority personnel or their representatives shall be allowed access to each work site covered by the provisions of the Health and Safety Plan and shall be furnished upon request with such information and assistance by the Contractor as is required to make a complete and detailed inspection.

506.81 Materials

A. Protective Equipment: Respiratory protective equipment shall conform to 42 CFR Part 84, OSHA Standard for Lead in Construction 29 CFR Part 1910.134, and 29 CFR Part 1926.62. Protective clothing shall be in conformance with 29 CFR Parts 1910.132 and 1910.133. The minimum protective clothing required shall be head covering, coveralls (reusable or disposable clothing), gloves, dedicated work-boots or disposable over-boots, eye protection, hearing protection, and hardhat.

B. Hand-Wash Facility: The number of facilities to be provided will be dictated by the site(s) and approved by the Resident. Each facility shall be equipped with hot and cold clean water, hand soap or similar cleansing agents, individual hand towels or sections made of cloth or paper, warm air blowers or clean individual sections of continuous cloth toweling which the workers will use to wash and dry their hands, face and exposed skin prior to eating, drinking, smoking or applying cosmetics. Each facility shall be located as close to the work site as physically possible. Ownership of and liability for the facility shall remain with the Contractor throughout the duration of the Project. The facility shall comply with 29 CFR Part 1926.51.

   Any wastewater generated shall be filtered/treated to be acceptable to current state and/or local standards for discharge into the existing public wastewater system. Each facility shall be kept in a sanitary condition and clean as defined in the most recent OSHA requirements. At a minimum, the facility shall be cleaned after every shift in which it is used.

C. Decontamination Facility: Facility(s) shall comply with 29 CFR Part 1926.51. The number of facilities to be provided will be dictated by the site(s) and approved by the Resident. The facility shall be located as close to the work site as physically possible. If the Contractor is unable to locate the decontamination facility close to specific work area, a designated shuttle vehicle shall be provided. This vehicle shall be classified as contaminated and shall remain at the jobsite in the decontamination zone. The vehicle shall be operated and maintained to eliminate cross-contamination with the support zone. The vehicle shall be cleaned as defined in the most recent OSHA protocols. Ownership of and liability for the facility and shuttle vehicle shall remain with the Contractor throughout the duration of the Project.

   Any wastewater generated shall be filtered/treated to be acceptable to current state and/or local standards for discharge into the existing public wastewater system.

506.90 Method of Measurement

Field Painting of Existing Steel shall be measured for payment by lump sum for the toll plaza work, complete, and accepted.

Surface Preparation of Existing Steel shall be measured for payment by lump sum for the toll plaza work, complete and accepted.

Containment System and Pollution Control Measures shall be measured for payment by the lump sum for the toll plaza work, consisting of all work previously described, completed, and accepted.

Disposal of Hazardous or Toxic Material shall be measured for payment by the lump sum for the toll plaza work, consisting of all material satisfactorily disposed of in conformance with these Specifications.

Lead Health Protection, if applicable, will not be measured for payment, and shall be incidental to the Contract.

506.91 Basis of Payment

The accepted quantity of Surface Preparation of Existing Steel will be paid for at the respective Contract lump sum price for the toll plaza work. Payment will be full compensation for furnishing all materials, labor, tools, equipment, scaffolding, QC inspections, and any other incidentals necessary for the satisfactory performance of the work.

All work for Field Painting of Existing Steel will be paid for at the Contract lump sum price for the toll plaza work. Payment will be full compensation for furnishing all materials, labor, tools, equipment, scaffolding, QC inspections, and any other incidentals necessary for the satisfactory performance of the work.

Containment System and Pollution Control Measures will be paid for at the Contract lump sum price for the toll plaza work. Payment will be full compensation for furnishing all materials, labor, tools, equipment, scaffolding, QC inspections, and any other incidentals necessary for the satisfactory performance of the work..

Disposal of Hazardous or Toxic Material will be paid for at the Contract lump sum price for the toll plaza work. Payment will be full compensation for all permits, tests, transportation, tipping fees, and any other incidentals necessary for the satisfactory performance of the above work.

Lead Health Protection, if applicable, will not be measured for payment, and shall be incidental to the Contract.

Partial payment of lump sum items as described in this 506 specification may be made as lanes are completed as approved by Resident.

Payment will be made under:

Pay Item		Pay Unit
506.14	Field Painting of Existing Steel	Lump Sum
506.17	Surface Preparation of Existing Steel	Lump Sum
506.18	Containment System and Pollution Control Measures	Lump Sum
506.191	Disposal of Hazardous or Toxic Material	Lump Sum

SPECIAL PROVISION

SECTION 506

SHOP COATING APPLICATION

506.11 Description

This specification covers the shop cleaning and painting of the new structural steel members including all connection components.

Interchange 32: All new structural steel members.

Interchange 46 (northbound): All new structural steel members.

The work shall consist of furnishing all supervisory personnel, competent person(s), labor, tools, equipment, Quality Control activities, materials, and incidentals necessary for satisfactory completion of the Work.

506.12 Materials

Materials shall comply with the requirements of the respective Subsections of this Specification.

506.13 Submittals

The Contractor shall submit for review by the Authority a materials list and other such details as described within the Plans and the respective Subsections of this Specification.

506.15 Inspection

For the purpose of this Specification, the following definitions shall apply:

Quality Assurance Inspector (Q.A.I.): The Authority's authorized representative for shop inspection.

Quality Control Inspector (Q.C.I.): The Contractor's authorized representative for shop surface preparation and application.

Quality Control (Q.C.) is the responsibility of the Contractor. The Q.C.I. shall inspect all aspects of the work and shall supervise required testing. The Q.C.I. shall record measurements and test results in a Job Control Record (JCR). The Q.C.I. shall reject materials and workmanship that do not meet Contract requirements. The results of all testing shall be documented and a copy made available to the Q.A.I. on a daily basis or as requested by the Resident or Q.A.I.

The JCR shall include the following, as applicable:

- Surface Preparation Cleanliness and Anchor Profile – before application of the first or primer coat.
- Environmental Conditions – Ambient temperature, surface temperature, relative humidity, and dew point.
- Dry Film Thickness (DFT) – After the coating has cured and before the application of any subsequent coating.
- Type of testing equipment, model, serial number, and calibration data, if applicable.
- Type of application equipment.
- Coating batch and/or lot number, date of manufacture, and shelf life.
- Manufacturer's certification of conformance.
- Name(s) of applicator(s).
- Cure data, cure times, temperature, and relative humidity.
- Final inspection by the Q.C.I. and acceptance by the Resident or Q.A.I.

Quality Assurance (Q.A.) is the prerogative of the Authority. The Q.A.I. will ensure that the Q.C. is being performed properly, verify documentation, periodically inspect workmanship and witness testing. Q.A. testing deemed necessary by the Resident in addition to the minimum test requirements shall be scheduled to minimize interference with the production schedule.

506.16 Quality Assurance Inspector's Authority

The Q.A.I. will have the authority to reject material or workmanship that does not meet the Contract requirements. The acceptance of material or workmanship by the Q.A.I. will not preclude subsequent rejection, if materials or workmanship is found unacceptable, by other authorized representatives of the Authority.

506.17 Rejections

Rejected material or workmanship, as described above, shall be corrected or replaced by the Contractor at no additional cost to the Authority.

506.18 Contractor Qualification

Shop applied coating systems shall be applied in facilities holding a current AISC Sophisticated Paint Endorsement (SPE) or has been qualified in accordance with SSPC QP3-Standard Procedure for Evaluating Qualifications of Shop Painting Applicators.

All Contractor and Subcontractor SSPC certifications specified above shall be current and in-place prior to bid opening. The Contractor shall ensure that all required SSPC certifications are kept current throughout the duration of the Contract until final acceptance of the work. A copy of valid current certifications shall be transmitted with the Bid Package.

COATING SYSTEMS

506.30 Description

Work shall consist of the shop application of coating systems in accordance with the Plans and Specification. Each coat shall be applied in accordance with the manufacturer's product data sheet and this Specification.

506.31 Materials

SHOP COATING SCHEDULE

The following coating system shall be used. Alternately, an equivalent system may be proposed and used by the Contractor, subject to approval by the Authority:

Manufacturer:	The Sherwin Williams Company
Primer:	Corothane I Galvapac 1K zinc-rich primer
Intermediate:	Corothane I Ironox B moisture-cure urethane
Finish:	Corothane I HS moisture-cure urethane

All three coats of the paint system shall be contrasting colors as follows:

Primer:	Default by the manufacturer
Intermediate:	As approved by the Resident
Finish:	"Toll Booth Dark Blue": Color formula to be provided by the Resident

The Contractor shall provide a dried sample of the specified finish color to the Authority for approval prior to the batching of the finish coat. Sample size, shape, and material shall be agreed upon with the Resident prior to submission.

The Contractor shall provide the paint batch description, lot number, date of manufacture, shelf life, and the manufacturer's published storage requirements to the Resident. The Contractor shall provide the manufacturer's product data sheet for each coating. The product data sheets shall include the manufacturer's recommended requirements for the equipment, surface cleanliness, mixing, thinning, application, environmental conditions, touch-up/repair procedures, and cure times for the entire range of allowable environmental conditions. All product data sheets and MSDS shall be submitted to the Resident for approval prior to initiating any coating work.

The product data sheets shall also provide the minimum and maximum recoat times for the primer and intermediate coat over the expected range of temperatures, relative humidity, and range of acceptable dry film thicknesses. The manufacturer's product data sheets at the time of submission shall be those used during the duration of the Project. Newly published product data sheets may be substituted as approved by the Resident.

506.33 Surface Preparation

Prior to abrasive blast cleaning, all corners and edges of members and plates, whether rolled cut or sheared, exposed in the assembled product shall be rounded to approximately an 1/8 inch radius. A series of tangents to the approximate radius will be considered as a rounded. The Contractor shall prepare a plate approximately 2 inch x 12 inch with the appropriate rounded corner and edge. The Q.C.I. and Q.A.I. shall agree upon the acceptability of the corner preparation and the plate shall become the Job Standard. The plate shall remain the property of the Contractor.

Surfaces to be coated shall be abrasive blast cleaned to meet the requirements of SSPC-SP 10/NACE No. 2 or the coating manufacturer's published recommendations, whichever is the more stringent. SSPC-VIS 1 shall be used to determine acceptable cleanliness. The Q.C.I. and Q.A.I. shall evaluate the first piece using VIS 1 as a comparator. No further blast cleaning shall be done until the Q.C.I. and Q.A.I. agree upon the acceptable Job Standard for cleanliness. If more than one method of abrasive blast cleaning is used (e.g., centrifugal blast and compressed air), the acceptable Job Standard shall be established for each method. At the Contractor's option, a sample piece may be abrasive blast cleaned and sealed with a clear coating to preserve the surface preparation and the sample piece may be used as a comparator to establish the agreed upon Job Standard.

After abrasive blast cleaning, the surface shall be visually inspected for fins, tears, delaminations and other discontinuities. Fins, tears and other discontinuities shall be removed with a grinder or other suitable power tool and the area shall be blended at a slope of approximately 1:20. The affected area(s) shall be abrasive blast cleaned to develop an acceptable anchor profile.

The anchor profile shall meet the requirements of the coating manufacturer's published recommendations. The blast media shall contain enough grit to provide an angular anchor profile. The anchor profile shall be measured in accordance with ASTM D 4417 Method C. If the anchor profile fails to meet the minimum requirements, the Contractor shall re-blast the substrate until the minimum required anchor profile is achieved. If the anchor profile exceeds the maximum allowed in the manufacturer's published recommendations, the substrate shall be coated only with the approval of the Resident.

The Q.C.I. shall measure the anchor profile of the substrate on each plane of the first piece and each additional piece with a significant change in size or geometry. The Q.A.I. will witness the testing. After it has been established to the satisfaction of the Resident, that the abrasive blast equipment is capable of providing uniform, acceptable surface preparation, a diminished degree of testing may be agreed upon by the Q.C.I. and Q.A.I. The Quality Assurance Inspector may require that the anchor profile be measured and recorded on any surface that is, in the judgment of the Quality Assurance Inspector, unacceptable. Failure to measure anchor profile as required will result in rejection of the surface preparation on the piece in question.

If there is a significant change in surface cleanliness or anchor profile due to blast media degradation or other reasons, the Contractor shall cease the blast operation until corrective action is taken.

If compressed air is used for abrasive blast cleaning, a blotter test shall be performed in accordance with ASTM D 4285 at the beginning of each shift and at any other time the Q.A.I. directs it. The Q.C.I. and Q.A.I. shall be present to witness the blotter test.

The allowable time between abrasive blast cleaning and primer application shall not exceed the manufacturer's published recommendations or eight-hours, whichever is less. If the substrate develops flash rust (rust bloom) before the primer is applied or before the primer application is completed, the piece shall be re-blasted to bare substrate and re-coated.

506.34 Application

All protective coating shall be applied using either conventional or airless spray equipment meeting the manufacturer's published recommendations. Striping and touchup of areas less than 36 in^2 may be applied by other methods with the approval of the Resident. Protective coating shall not be applied when the ambient temperature in the immediate vicinity of the piece(s) in question is above 90˚F or below 40˚F. Thinning and mixing of coatings shall be in conformance with the manufacturer's published instructions. Thinner shall be measured using a graduated cup or other container that clearly indicates the amount of thinner being added. Mixing shall be done using the method, equipment and for the amount of time recommended by the coating manufacturer.

Primer, intermediate, and top coat shall be applied in accordance with the manufacturer's published recommendations. Environmental conditions in the immediate vicinity of the surfaces to be coated shall be within the range of the manufacturer's published requirements both during the coating operation and during the curing period. Primer shall not be force-cured.

Environmental conditions shall be measured by the Q.C.I. in the immediate vicinity of the surfaces to be coated. The Q.A.I. may perform environmental testing in addition to the testing performed by the Q.C.I. If there are significant differences between the test results, the differences shall be resolved or explained to the satisfaction of the Resident prior to coating application. The results of the environmental testing shall be recorded in the JCR.

Corners, fasteners, welds and inaccessible locations shall be striped in accordance with SSPC-PA 1. The Contractor shall meet the minimum Dry Film Thickness (DFT) requirements on all surfaces. The Contractor may stripe with the intermediate coat if approved by the Resident.

Recoat time shall be in accordance with the manufacturer's published requirements for the environmental conditions at the time of application and cure. If the coating is contaminated with dust, debris, over spray or other deleterious material, the surface shall be cleaned in accordance with SSPC-SP 1 immediately prior to recoating. Other methods of cleaning may be used if approved by the Resident.

The Q.A.I. shall be given ample notice in order to inspect the product prior to coating, recoating or removal of paint from the area. "Ample notice" shall be defined at the Pre-Job meeting depending on shop or site conditions.

Substrates that are primed or surfaces that are recoated without notification of the Q.A.I. will be rejected and no further coating shall be done on the piece. Coating applied without notification of the Q.A.I. will be investigated by destructive and non-destructive testing as

approved by the Resident and by a review of the JCR. The Resident may reject, conditionally accept, or accept the coating based on documentation and test results. Rejected coating shall be removed and re-applied. Conditionally accepted coatings shall be made acceptable as approved by the Resident. The cost of additional testing and repairs shall be borne by the Contractor.

506.35 Dry Film Thickness

DFT shall be measured in accordance with SSPC-PA 2. The results shall be documented in the JCR. The JCR documentation shall include the actual gage readings, spot average and the location(s).

506.36 Coating Repairs and Touch-up

Touch-up shall be done in accordance with the manufacturer's product data sheet and this Specification. Areas to be touched-up shall be prepared to assure proper adhesion of each coat. Each existing coat shall be feathered back to assure that each touch-up coat is continuous with each corresponding existing coat. The top-coat shall be smooth and uniform in appearance.

Damaged or unacceptable coatings shall be repaired using the same coating system. Environmental conditions cure times, and DFTs shall be in accordance with manufacturer's product data sheet for the coating being applied. Repairs to topcoat shall result in a uniform gloss and color match. The Resident shall have final authority concerning acceptable appearance.

506.37 Handling and Storage

The coating shall be adequately cured before handling, but under no circumstances shall the product be handled before the coating has achieved the manufacturer’s published minimum cure time. Coated steel members shall be handled in a manner to avoid damage to the coating. Members shall be lifted and moved using non-metallic slings, padded chains and beam clamps, softeners or other non-injurious methods. Material shall be stored, both at the coating facility and in the field, in a manner that prevents damage to the coating.

Material shall not be loaded for shipment until the shop coating has adequately cured and been inspected. The components will be stamped "APPROVED" only after the loading has been completed and approved, and no material shall be shipped without the prior approval of the Resident.

Damage to the coating that is discovered after the product is loaded for shipment to the jobsite shall be documented by the Q.C.I. Repairs shall not be made unless the damaged area is repaired in accordance with Subsection 506.26 Coating Repairs and Touch-up. Repairs that cannot be acceptably done on the truck shall be done in the shop or in the field at the Contractor’s option.

HOT-DIP GALVANIZING

506.40 Description

This work shall consist of surface preparation and application of hot-dip galvanizing in accordance with the Plans and this Specification. Hot-dip galvanizing shall meet the

requirements of AASHTO M 111/ASTM A 123, Standard Specification for Zinc (Hot-Dip Galvanized) Coatings on Iron and Steel (A 123), including any applicable requirements listed in Section 2-Referenced Documents. The minimum average coating thickness grade shall conform to Table 1. The frequency of testing shall be in accordance with Section 6. The choice of the test method is the prerogative of the Contractor. Record the test results and provide them to the Department. Provide certification of compliance and written test results to The Department in accordance with A 123 -Section 10.

506.41 Surface Preparation

Abrasive blast-clean the steel to a minimum of SSPC-SP 6, Commercial Blast Cleaning (SP 6) prior to galvanizing. Grind all corners exposed in the assembled product to a 1/16 inch radius prior to galvanizing.

506.42 Repairs

Repairs to galvanizing shall be in accordance with ASTM A 780, Standard Practice for Repair of Damaged and Uncoated Areas of Hot-Dip Galvanized Coatings (A 780), Annex A1 or A3. Zinc-rich paints for repairs may only be used with approval of the Fabrication Engineer.

506.43 Top-coating Galvanized Surfaces

Areas of galvanized surfaces to be top-coated will be described on the Plans or in the Special Provisions.

Do not use chromate quenching or other types of quenching after galvanizing. Remove runs, sags, dross and other deleterious material from surfaces to be painted. Provide a smooth uniform surface, free of heavy build areas or other discontinuities that will project through the finish coat. Perform repairs to galvanizing in accordance with A 780. Remove visible surface contaminants in accordance with SSPC-SP 1, Solvent Cleaning (SP 1) prior to blast cleaning. Blast-clean surfaces to be coated in accordance with SSPC-SP 7/NACE No.4-Brush-Off Blast-Cleaning (SP 7). Measure the anchor profile in accordance with ASTM D 4417 Method C (replica tape). Record the results in a manner acceptable to the Fabrication Engineer. Assure that the anchor profile corresponds with the anchor profile requirements on the Manufacturer's Product Data Sheet.

506.92 Method of Measurement

Shop Coating of New Steel shall not be measured separately for payment, but shall be incidental to Pay Item 800.501 - New Toll Booth and Canopy - Interchange 32 and 46 and Pay Item 800.701 - New Canopy Sign Installation - Interchange 46 & 47.

SPECIAL PROVISION

SECTION 511

COFFERDAMS

(Temporary Earth Support Systems)

Section 511, Cofferdams, is deleted in its entirety and replaced with the following:

511.01 Description

This work shall consist of the complete design, construction, maintenance and removal of all temporary earth support systems including, but not necessarily limited to, cofferdams, caissons, cribs and sheeting, and other related work, including dewatering, required to allow for the excavation of foundation pits; to permit and protect the construction of structural units; to allow for the demolition and/or construction of concrete abutments, piers, foundations, wingwalls, headwalls, and culverts; removal and/or construction and maintenance of approach roadways; and any other work requiring temporary earth support mandated by OSHA, Subpart P, Excavation Requirements, or required for the maintenance of traffic. The temporary earth support systems shall meet all of the applicable requirements of the Standard Specifications.

Temporary earth support structures shall be specified as Cofferdam(s) when it is determined a temporary earth support structure will be required to keep high ground water, stream, river, pond, lake or ocean tidal waters out of the excavation so the identified substructure unit can be constructed in the dry. The locations of Cofferdam(s) will be shown on the Plans. Cofferdam(s) may or may not require seal concrete.

All other temporary earth support structures shall be specified as Temporary Earth Support Structures. Temporary earth support structures may require pumping or dewatering to complete the Project work. The locations of temporary earth support structures may, or may not, be shown on the Plans whether required for the completion of the Contract or not. Temporary earth support structures do not require seal concrete.

511.02 Materials

A minimum of three weeks prior to the start of work, the Contractor shall submit the proposed method of temporary earth support systems for review and approval. The submission shall include working drawings and list the type and size of the proposed support, details of construction, calculations and a sequence of operations all of which shall be designed and sealed by a Professional Engineer licensed in the State of Maine. This Professional Engineer may be directly employed or otherwise retained by the Contractor. Working drawings shall consist of plan views and cross sections to illustrate clearances, limits, and retainment heights as applicable at roadway cuts, cofferdams, abutment footings, and phased construction areas. Construction shall not be started on temporary earth support systems until such submittals are approved. Approval of the submittals shall not relieve the Contractor of the responsibility for the satisfactory functioning of the temporary earth support systems.

The temporary earth retaining structures shall be designed to support all appropriate combinations of earth, water, and surcharge loads (from traffic, construction equipment, material stockpiles, and other sources) imposed on the systems during all phases of construction. The Contractor's design shall consider the means and methods and construction sequencing proposed by the Contractor. The Contractor is responsible for selecting an appropriate factor of safety for the Temporary Earth Retaining Structures. The factor of safety and maximum applied loads are resistances used for the design shall be clearly stated on the submitted calculations.

Prior to excavating or loading the temporary earth support systems, the Professional Engineer responsible for the design of the temporary earth support systems shall provide after inspection of the systems a sealed certification to the Resident that the systems were erected in conformance with the Professional Engineer's Plans and design details.

The submission shall also show the Contractor's proposed method of excavation, water diversion and dewatering methods (sumps, wells, seal concrete, or well points) to minimize the flow of groundwater into the excavation. Such methods should preserve the undisturbed condition of the subgrade and permit foundation construction in-the-dry.

Seal concrete shall conform to the requirements of Class S Concrete. Where seal concrete is required to have a steel reinforcing mat, the steel reinforcement shall conform to ASTM A615, Grade 60.

511.03 Temporary Earth Support System Construction

Temporary earth support systems shall, in general, be carried well below the elevation of the bottom of footings or approach slabs, and shall be well braced and watertight. In cases where pile foundations contain batter piles, the temporary earth support system shall be installed to accommodate without obstruction the proper placement and alignment of the batter piles, either by staggering the depth of the support system or by increasing the annulus between the foundation and the support system. Unless it is contemplated that a concrete foundation seal will be placed under water, the interior dimensions of temporary earth support systems shall be such as to give sufficient clearance for the construction and inspection of forms and to permit pumping outside of forms. Exterior dimensions of the temporary earth support system shall be limited to the size shown on the Plans or those illustrated in the Project permits, whichever is more stringent.

During the placing of seal concrete, the elevation of the water inside the temporary earth support systems shall be controlled to prevent any flow through the concrete.

Temporary earth support systems shall be constructed to protect fresh concrete against damage from the sudden rising of the water body and to prevent damage by erosion.

Temporary earth support systems, including all sheeting and bracing involved, shall be removed after the completion of the substructure unless otherwise noted on the Contract Drawings; care being taken not to disturb or otherwise injure the finished masonry. No timber or bracing shall be used in temporary earth support systems in such a way as to remain in the substructure masonry.

At bridge approaches where phased construction results in close confinement of the temporary earth support systems to the existing and new roadways, a lateral support device shall be designed and installed atop the concrete approach slab for the purpose of preventing undermining and/or settlement of the newly constructed roadway. Lateral support systems shall be designed and positioned so as to provide lateral rigidity to the completed roadway during Phase II construction, while preventing any reflection of the device through the pavement above. The design, details, and sketches of the permanent lateral support device shall be presented as part of the Contractor's submissions for Temporary Earth Support Systems. Removal of the lateral support device shall not require additional phases of construction nor compromise the integrity of the roadway. At the Contractor's option, the lateral support device may be left in place with the approval of the Resident.

511.04 Pumping

Pumping from the interior of any foundation enclosure shall be done in such a manner as to prevent any current of water that would carry away or segregate the concrete.

Pumping to dewater a sealed temporary earth support system shall not commence until the seal concrete has set sufficiently to withstand the hydrostatic pressure. In no case will pumping be permitted until a minimum of five days has elapsed since the completion of the installation of the seal concrete, when the temperature of the water body outside the temporary earth support system is greater than 4°C [40°F], or a minimum of seven days has elapsed since the completion of the installation of the seal concrete, when the temperature of the water body outside the temporary earth support systems is less than 4°C [40°F].

Sediment laden water will not be allowed to leave the Project area. The Contractor shall be required to install appropriate erosion and sedimentation control devices as approved by the Resident. Erosion and sedimentation control devices may include plain riprap, haybales, silt fence and sedimentation basins.

All water and materials pumped from excavation shall be pumped into a sedimentation basin which is of sufficient volume to detain the pumped water and materials. The water and materials removed from the excavation shall be pumped at a rate that permits infiltration of the water into the earth, preventing any overland flow or direct discharge into a stream or other waterbody.

511.05 Method of Measurement

Temporary Earth Support Systems, with the exception of Cofferdams, shall be measured for payment as one lump sum per Contract, regardless of the number of Temporary Earth Support structures required at the Project site or sites, which price shall include full compensation for design, furnishing materials, excavation beyond the pay limits, installation, removal, tools, equipment and labor necessary to construct, maintain and remove the work in accordance with the Plans or as called for in the Contract.

If Temporary Earth Support Systems is not required due to the acceptance of a Value Engineering Proposal in accordance with Subsection 109.6, the cost of the deleted Temporary Earth Support Systems shall be included as part of the Value Engineering Proposal.

Cofferdam shall be measured for payment as one lump sum per location identified on the Plans, which price shall include full compensation for design, furnishing materials, excavation beyond the pay limits, installation, removal, tools, equipment and labor necessary to construct, maintain and remove the work in accordance with the Plans or as called for in the Contract. When cofferdams remain as permanent countermeasures against scour, removal of the unused section of sheet pile above the cut-off line shall be included in the lump sum payment.

If Cofferdam is not required due to the acceptance of a Value Engineering Proposal in accordance with Subsection 109.6, the cost of the deleted Cofferdam shall be included as part of the Value Engineering Proposal.

511.06 Basis of Payment

The accepted quantity of Temporary Earth Support Systems will be paid for at the Contract lump sum price, per Contract, for the respective Temporary Earth Support Systems.

When required, the elevation of the bottom of footing of any substructure unit may be lowered, without change in the price to be paid for Temporary Earth Support Systems. However, if the average elevation of more than 25 percent of the area of the excavation is more than three feet below the elevation shown on the Plans, and if requested by the Contractor, then the entire cost of the Temporary Earth Support Systems will be paid in accordance with Subsection 109.7, Equitable Adjustments to Compensation, instead of the Contract lump sum price.

All costs of constructing, maintaining and removing sedimentation basins; water testing; and pumping or transporting water and other materials to the sedimentation basin will not be measured separately for payment, but shall be incidental to the Temporary Earth Support Systems item.

All costs of related temporary soil erosion and water pollution controls, including inspection and maintenance, will not be measured separately for payment, but shall be incidental to the Temporary Earth Support Systems item.

All costs of lateral support devices installed in support of phased construction at the bridge approaches, will not be measured separately for payment, but shall be incidental to the Temporary Earth Support Systems item.

When required, the elevation of the bottom of footing of any substructure unit may be lowered, without change in the price to be paid for Cofferdam. However, if the average elevation of more than 25 percent of the area of the excavation is more than three feet below the elevation shown on the Plans, and if requested by the Contractor, then the entire cost of the Cofferdam will be paid in accordance with Subsection 109.7, Equitable Adjustments to Compensation, instead of the Contract lump sum price.

All costs relating to the furnishing and placing of seal concrete will be paid under Pay Item 502.249, Structural Concrete Piers – Seal Concrete (placed under water), pay unit lump sum.

All costs relating to the excavation of earth material to facilitate construction of Temporary Earth Support Systems and Cofferdams, and placement of structural concrete will be

paid under Pay Item 206.08, Structural Earth Excavation – Major Structures, pay unit cubic yard; or Pay Item 206.10, Structural Earth Excavation – Piers, pay unit cubic yard, as applicable.

All cost of constructing, maintaining and removing sedimentation basins; water testing; and pumping or transporting water and other materials to the sedimentation basin will not be measured separately for payment, but shall be incidental to the Cofferdam item(s).

All costs of related temporary soil erosion and water pollution controls, including inspection and maintenance, will not be measured separately for payment, but shall be incidental to the Cofferdam item(s).

Payment will be made under:

Pay Item		Pay Unit
511.091	Temporary Earth Support Systems	Lump Sum

SPECIAL PROVISION

SECTION 515

PROTECTIVE COATING FOR CONCRETE SURFACES

(Pigmented Concrete Protective Coating)

This Section is deleted in its entirety and replaced with the following:

515.01 Description

The work shall include the surface preparation and application of a pigmented concrete protective coating system to protect new and existing concrete and masonry structures. The coating system shall be applied to piers, endposts, wingwalls, abutments, curbs and fascia in accordance with the Plans, Specifications and the manufacturer's published recommendations.

515.02 Materials

The pigmented penetrating sealer system shall be a two coat system consisting of Certi-Vex Guard and Certi-Vex Envio Smooth VOC, as manufactured by Vexcon Chemicals, Inc., or an approved equal, consisting of the following two parts:

- The primer shall be a vinyl toulene acrylic silane polymer blend or an approved equal. This primer shall provide the main protection against the ingress of water borne chlorides and sulfates.

- The top coat shall be solvent borne modified acrylic resins with selected pigments and fillers.

The product shall comply with regulations limiting the Volatile Organic Compound (VOC) content of architectural and industrial maintenance coatings.

The Contractor shall submit the Vexcon Chemical's product data sheets, material safety data sheets and recommended instructions for application of the Certi-Vex Guard and Certi-Vex Envio Smooth VOC.

The pigmented penetrating sealer color shall be Concrete Gray.

Materials shall be delivered to the site in original packages or containers bearing the manufacturer's labels and identification.

515.021 Substitute Materials

The Contractor shall submit a written request for approval of proposed substitute material naming the proposed manufacturer and product. This request shall be accompanied by:

1. Test data from an independent testing laboratory stating that the proposed substitute meets or exceeds the specified requirements as listed and has been tested in accordance with the specified test standards.

2. Documentation that the proposed material has a proven record of performance when used in the intended application as confirmed by actual field tests and successful installations in place on at least five similar projects.

3. Certification that if two or more types of products are intended to be used as part of a system they will be supplied by the same manufacturer to ensure compatibility of materials, and to maintain single source manufacturer responsibility.

The Resident reserves the right to require additional testing to evaluate any proposed substitute product at no additional cost to the Authority. The Resident's decision as to the acceptability or non-acceptability of the proposed product shall be final.

515.03 Surface Preparation

All caulking, patching, and joint sealant shall be installed prior to application of the sealer. The surface shall be prepared in strict accordance with the instructions of the approved manufacturer. Surface shall be fully cured, dry, and free from contamination such as asphalt coatings, oil, grease, loose particles, decaying matter, moss, algae growth, and curing compounds. For maximum penetration of the primer, the Contractor shall lightly sandblast the surface.

Existing form tie hole plugs which are loose or deteriorated shall be completely removed. The holes shall be reamed to sound concrete. All open form tie holes, new and existing shall be filled with an approved non-shrinking mortar, and after setting, rubbed level to the adjacent surface. Filled holes shall be cured for at least two (2) days prior to the application of the concrete protective coating.

The Contractor may use, when required, appropriate cleaning materials recommended by the sealer manufacturer in conjunction with high pressure water for cleaning the concrete or masonry.

Grass and vegetation adjacent to surfaces to be coated shall be removed or trimmed closely to permit proper preparation and application of the coating.

515.04 Application

The materials shall be mixed and applied in strict accordance with the instructions of the approved manufacturer. Spray or roll the primer at the recommended application rate. If the surface is very absorbent, the primer should be applied until surface is saturated per the manufacturer’s written instructions. All areas not to receive coating shall be marked with straight, even lines as the limit lines.

The Contractor shall, in the presence of the Resident, apply the materials on a sample area which is representative of a jobsite application. When color and application methods are approved, the sample area shall serve as a standard of acceptance for all further work.

The primer shall not be applied in direct sunlight when the air or surface temperature is greater than 90°F, or when air or surface temperature is below 35°F. The top coat shall not be applied when air or surface temperature is below 40°F or as approved by the Resident.

The primer shall be allowed to dry for a minimum of two-hours before applying pigmented top coat. Under poor drying conditions this time shall be extended. The primer shall not be coated with top coat until the surface is dry. The top coat should be applied by brush, roller or suitable airless spray.

Top coat material shall be applied per the manufacturer's recommended application rate and in strict accordance with the manufacturer's written instructions. The top coat shall provide consistent color without light spots or shadows. The Resident reserves the right to have the Contractor recoat the top coat if the dried top coat(s) lack consistent color or show light spots or shadows.

Protect plants, grass, sealant, asphalt, traffic, etc. during application from spray.

515.05 Method of Measurement

Pigmented Concrete Protective Coating will be measured for payment by the square yard, satisfactorily applied and accepted.

515.06 Basis of Payment

Pigmented Concrete Protective Coating will be paid at the Contract unit price per square yard which price shall be full compensation for all labor, materials, equipment and incidentals required for furnishing and applying the pigmented concrete protective coating as shown on the Plans, in accordance with these Specifications or as approved by the Resident.

Surface preparation, vegetation removal, and protection of surfaces not designated for treatment will not be paid for separately, but shall be incidental to the Pigmented Concrete Protective Coating item.

Payment will be made under:

Pay Item		Pay Unit
515.201	Pigmented Protective Coating for Concrete Surfaces	Square Yard

SPECIAL PROVISION

SECTION 515

PROTECTIVE COATING FOR CONCRETE SURFACES

(Clear Concrete Protective Coating)

This Section is deleted in its entirety and replaced with the following:

515.01 Description

The work shall include the surface preparation and application of a clear protective coating on concrete surfaces to protect new and existing cast-in-place concrete, precast concrete and masonry structures. The coating system shall be applied to all exposed island, bumpers, curbs, fascia, median barriers, pedestals and other exposed concrete surfaces in accordance with the Plans, Specifications and the manufacturer's published recommendations.

515.02 Materials

The penetrating sealer shall be Stand Off SLX100 Water & Oil Repellent, as manufactured by ProSoCo, Inc., or an approved equal. The sealer shall have the following properties:

Active Substance:	modified alkyl alkoxy silane
Active Content:	> 90%
Form:	clear liquid
VOC:	< 3.5 pounds per gallon

The product shall comply with regulations limiting the Volatile Organic Compound (VOC) content of architectural and industrial maintenance coatings.

The Contractor shall submit the ProSoCo's product data sheets, material safety data sheets and recommended instructions for application of the Stand Off SLX100.

Materials shall be delivered to the site in original packages or containers bearing the manufacturer's labels and identification.

515.021 Substitute Materials

The Contractor shall submit a written request for approval of proposed substitute material naming the proposed manufacturer and product. This request shall be accompanied by:

1. Test data from an independent testing laboratory stating that the proposed substitute meets or exceeds the specified requirements as listed and has been tested in accordance with the specified test standards.
2. Documentation that the proposed material has a proven record of performance when used in the intended application as confirmed by actual field tests and successful installations in place on at least five similar projects.

3. Certification that if two or more types of products are intended to be used as part of a system, they will be supplied by the same manufacturer to ensure compatibility of materials, and to maintain single source manufacturer responsibility.

The Resident reserves the right to require additional testing to evaluate any proposed substitute product at no additional cost to the Authority. The Resident's decision as to the acceptability or non-acceptability of the proposed product shall be final.

515.03 Surface Preparation

All caulking, patching, and joint sealant shall be installed prior to application of the sealer. On new surfaces to be treated, all voids shall be dressed by dry rubbing to remove form marks and blemishes to present a neat appearance. Concrete and masonry surfaces shall be cleaned free of dust, surface dirt, oil, efflorescence and contaminants to ensure penetration of the sealer. The surface may be slightly damp at the time of treatment.

The Contractor may use, when required, appropriate cleaning materials recommended by the sealer manufacturer in conjunction with high pressure water for cleaning the concrete or masonry.

515.04 Application

The Contractor shall apply the clear concrete protective coating in strict accordance with the manufacturer's published recommendations.

The application shall not be conducted when surface and air temperatures are below 40°F or above 100°F. The work shall not be conducted when there is a chance of the surface temperature falling below 40°F in the 24-hours following application.

The treatment shall not be applied during rain to wet surfaces or when there is a chance of rain within 24-hours after application. After treatment, surfaces should be protected from rain for not less than 48-hours. It shall not be applied when winds are sufficient to carry airborne chemicals to unprotected surfaces.

Prior to applying the sealer, the Contractor shall protect all surrounding non-masonry/non-concrete surfaces, landscape and lawn areas, and surfaces not designated for treatment, from contact with the penetrating sealer, and prevent overspray of the penetrating sealer caused by wind drift.

The Contractor shall ensure that all safety equipment, facilities and precautions recommended by the product manufacturer are furnished and/or strictly adhered to.

The sealer material shall be applied in the manner and with the equipment recommended by the product manufacturer. Coverage will vary depending on condition, texture and porosity of the surfaces. Pre-testing is required.

Sealer shall be applied as packaged without dilution or alteration. The sealer shall be applied with low pressure (20 psi) airless spray equipment or with a heavily saturated brush or

roller unless otherwise permitted by the Resident. Sufficient material shall be applied to thoroughly saturate the surface making sure to brush out excess material that does not penetrate.

When the sealer is applied to horizontal surfaces, it shall be applied in a single saturating application with sufficient material and applied so the surface remains wet for one to two minutes before penetration into the concrete. Surface residues, pools and puddles shall be broomed-out thoroughly until they completely penetrate into the surface.

When the sealer is applied to vertical and sloped surfaces, it shall be applied in a "wet-on-wet" application for best results on most porous materials. In the case of extremely dense concrete, it may be necessary to restrict the amount of material applied to one saturating application in order to prevent surface darkening. Apply from the bottom up with sufficient material to thoroughly coat the surface and create a slight rundown below the spray pattern. Allow the first application to penetrate the concrete surface, and within a few minutes after the first coat appears dry, reapply in the same saturating manner.

When the sealer is applied to vertical and sloped surfaces, it shall be applied in two applications, 10 minutes apart, with a low pressure (20 psi) airless sprayer.

515.05 Method of Measurement

Clear Protective Coating for Concrete Surfaces will be measured for payment by the square yard, satisfactorily applied and accepted.

515.06 Basis of Payment

Clear Protective Coating for Concrete Surfaces will be paid at the Contract unit price per square yard which price shall be full compensation for all labor, materials, equipment and incidentals required for furnishing and applying the clear concrete protective coating as shown on the Plans, in accordance with these Specifications or as approved by the Resident.

Surface preparation, vegetation removal, and protection of surfaces not designated for treatment will not be measured separately for payment, but shall be incidental to the Clear Concrete Protective Coating item.

Payment will be made under:

Pay Item		Pay Unit
515.202	Clear Protective Coating for Concrete Surfaces	Square Yard

SPECIAL PROVISION

SECTION 515

PROTECTIVE COATING FOR CONCRETE SURFACES

(Epoxy Overlay)

515.01 Description

The first paragraph is amended to read:

This special provision describes furnishing and applying two layers of a two-component polymer overlay system in accordance with what is shown on the Plans or as approved by the Resident. The total thickness of the overlay system shall be 1/4 inch.

515.02 Materials

Furnish materials specifically designed for use over concrete. Pre-qualified polymer liquid binders are as follows:

Product Trade Name	Manufacturer or Supplier	Telephone
Mark-163 Flexogrid	PolyCarb, Inc.	(866) 765-9227
Sikadur 22 Lo-mod	Sika Corporation	(248) 569-5665
E-Bond 526 Lo-Mod	E-Bond Epoxies, Inc.	(954) 566-6555
Propoxy DOT Type III	Unitex	(816) 231-7700
Sure Level Epoxy (J-57)	Dayton Superior	(888) 977-9600
ICO Flexi-Coat	International Coatings, Inc.	(800) 624-8919
Flexolith	Euclid Chemical Co.	(800) 321-7628

Polymer Resin

The polymer resin base and hardener shall be composed of two-component, 100 percent solids, 100 percent reactive, thermosetting compound with the following properties:

Property	Requirements	Test Method
Gel Time [A]	15 - 45 minutes @ 75° F	ASTM C881
Viscosity [A]	7 - 70 poises	ASTM D2393, Brookfield RVT, Spindle No. 3, 20 rpm
Shore D Hardness [B]	60-75	ASTM D2240
Absorption [B]	1% maximum at 24 hour	ASTM D570
Tensile Elongation [B]	30% - 70% @ 7 days	ASTM D638
Tensile Strength [B]	>2000 psi @ 7 days	ASTM D638
Flexural Strength [B]	>4500 psi @ 7 days	ASTM D790
Chloride Permeability [B]	<100 coulombs @ 28 days	AASHTO T277

[A] Uncured, mixed epoxy binder [B] Cured, mixed epoxy binder

Aggregates

Furnish natural or synthetic aggregates that have a proven record of performance in applications of this type. Furnish aggregates that are non-polishing, clean, free of surface moisture, fractured or angular in shape; free from silt, clay, asphalt, or other organic materials; and meet the following properties and gradation requirements:

Aggregate Properties:

Property	Requirement	Test Method
Moisture Content	≤0.2%	ASTM C566
Hardness	≥6.5	Mohs Scale
Fractured Faces	100% with at least 1 fractured face & 80% with at least 2 fractured faces of material retained on No.16	ASTM 5821

Gradation:

Sieve Size	% Passing by Weight
No. 4	100
No. 8	30 – 75
No. 16	0 – 5
No. 30	0– 1

515.21 Required Properties of Overlay System

The required properties of the overlay system are listed in the table below:

Property	Requirement [A]	Test Method
Minimum Compressive Strength at 8 Hrs. (psi)	1,000 psi @ 8 hours 5,000 psi @ 24 hours	ASTM C 579 Method B, Modified [B]
Thermal Compatibility	No Delaminations	ASTM C 884
Minimum Pull-off Strength	250 psi @ 24 hours	ACI 503R, Appendix A

[A] Based on samples cured or aged and tested at 75°F

[B] Plastic inserts that will provide 2-inch by 2-inch cubes shall be placed in the oversized brass molds.

515.22 Approval of Polymer Overlay System

Submit product data sheets and specifications from the manufacturer, and a certified test report to the Resident for approval.

For materials not pre-qualified, in addition to the above submittals, submit product history/reference projects and a certified test report from an independent testing laboratory showing compliance with the requirements of the specification.

Product data sheets and specifications from the manufacture consists of literature from the manufacturer showing general instructions, application recommendations/methods, product properties, general instructions, or any other applicable information.

515.23 Construction

Conduct a pre-installation conference with the manufacturer's representative prior to construction to establish procedures for maintaining optimum working conditions and coordination of work. Furnish the Resident a copy of the recommended procedures and apply the overlay system according to the manufacturer's instructions. The manufacturer's representative familiar with the overlay system installation procedures shall be present at all times during surface preparation and overlay placement to provide quality assurance that the work is being performed properly.

Store resin materials in their original containers in a dry area. Store and handle materials according to the manufacturer's recommendations. Store all aggregates in a dry environment and protect aggregates from contaminants on the jobsite.

Surface Preparation

Determine an acceptable shotblasting machine operation (size of shot, flow of shot, forward speed, and/or number of passes) that provides a surface a profile meeting CSP 5 according to the International Concrete Repair Institute Technical Guideline No. 03732. If the Resident requires additional verification of the surface preparation, test the tensile bond strength according to ACI 503R, Appendix A of the ACI *Manual of Concrete Practice*. The surface preparation will be considered acceptable if the tensile bond strength is greater than or equal to 250 psi or the failure area at a depth of 1/4 inches or more is greater than 50 percent of the test area. Continue adjustment of the shotblasting machine and necessary testing until the surface is acceptable to the Resident or a passing test result is obtained.

Prepare the entire surface using the final accepted adjustments to the shotblasting machine as determined above. Thoroughly blast cleans with hand-held equipment any areas inaccessible by the shotblasting equipment. Do not perform surface preparation more than 24-hours prior to the application of the overlay system.

Just prior to overlay placement, clean all dust, debris, and concrete fines from the concrete surface including vertical faces of curbs and barrier walls up to a height of one inch above the overlay with compressed air. When using compressed air, the air stream must be free of oil. Any grease, oil, or other foreign matter that rests on or has absorbed into the concrete shall be removed completely.

The Resident may consider alternate surface preparation methods per the overlay system manufacture's recommendations. The Resident will approve the final surface profile and cleanliness prior to the Contractor placing the epoxy overlay.

Application of the Overlay

Perform the handling and mixing of the epoxy resin and hardening agent in a safe manner to achieve the desired results according to the manufacturer's instructions. Do not apply the overlay system if any of the following exists:

a. Ambient air temperature is below 50°F;
b. Concrete surface temperature is below 50°F;
c. Moisture content in the concrete exceeds 4.5 percent when measured by an electronic moisture meter or shows visible moisture after two-hours when measured in accordance with ASTM D4263;
d. Rain is forecasted during the minimum curing periods listed under C.5 ;
e. Materials component temperatures below 50°F;
f. Concrete age is less than 28 days unless approved by the Resident.

After the concrete surface has been shotblasted or during the overlay curing period, only necessary surface preparation and overlay application equipment will be allowed on the concrete surface. Begin overlay placement as soon as possible after surface preparation operations.

The polymer overlay shall consist of a two-course application of epoxy and aggregate. Each of the two courses shall consist of a layer of epoxy covered with a layer of aggregate in sufficient quantity to completely cover the epoxy. Apply the epoxy and aggregate according to the manufacturer's requirements. Apply the overlay using equipment designed for this purpose. The application machine shall feature positive displacement volumetric metering and be capable of storing and mixing the polymer resins at the proper mix ratio. Disperse the aggregate using a standard chip spreader or equivalent machine that can provide a uniform, consistent coverage of aggregate. First course applications that do not receive enough aggregate before the epoxy gels shall be removed and replaced. A second course applied with insufficient aggregate may be left in place, but will require additional applications before opening to traffic.

After completion of each course, cure the overlay according to the manufacturer's instructions. Follow the minimum cure times as prescribed by the manufacturer. Remove the excess aggregate from the surface treatment by sweeping, blowing, or vacuuming without tearing or damaging the surface; the material may be re-used if approved by the Resident and manufacturer. Apply all courses of the overlay system before opening the area to traffic. Do not allow traffic on the treated area until directed by the Resident.

After the first layer of coating has cured to the point where the aggregate cannot be pulled out, apply the second layer. Prior to applying the second layer, broom and blow off the first layer with compressed air to remove all loose excess aggregate.

Prior to opening to traffic, clean all debris and polymer from the roadway. If required by the Resident, a minimum of three days following opening to traffic, remove loosened aggregates from the concrete and approach pavement.

Application Rates

Apply the epoxy overlay in two separate courses in accordance with the manufacturer's instructions, but not less than the following rate of application.

Course	Minimum Epoxy Rate [A] (GAL/100 SF)	Aggregate [B] (LBS/SY)
1	2.5	10+
2	5.0	14+

[A] The minimum total applications rate is 7.5 GAL/100 SF.
[B] Application of aggregate shall be of sufficient quantity to completely cover the epoxy.

Minimum Curing Periods

As a minimum, cure the coating as follows:

	Average temperature of concrete surface, epoxy and aggregate components in °F					
Course	60-64	65-69	70-74	75-79	80-84	85+
1	4 hrs.	3 hrs.	2.5 hrs	2 hrs	1.5 hrs.	1 hr.
2 *	6.5 hrs.	5 hrs.	4 hrs.	3 hrs.	3 hrs.	3hrs.

*Cure course 2 for eight hours if the air temperature drops below 60° F during the curing period.

515.05 Method of Measurement

The Authority will measure Epoxy Overlay in area by square yards completed and accepted, in accordance with the Plans.

515.06 Basis of Payment

Payment is full compensation for preparing the surface; for tensile bond testing; for providing the overlay; for cleanup; for sweeping/vacuuming and disposing of excess materials; and for labor, equipment, tools, and incidentals necessary to complete the work.

Payment will be made under:

Pay Item		Pay Unit
515.23	Epoxy Overlay	Square Yard

SPECIAL PROVISION

SECTION 518

STRUCTURAL CONCRETE REPAIR

(Concrete Slab Crack Repairs)
(Partial Depth Concrete Slab Repairs Type I)
(Partial Depth Concrete Slab Repairs Type II)
(Full Depth Concrete Slab Repairs)

518.01 Description

The following paragraphs are added:

The work includes concrete slab crack repairs, and partial and full depth concrete slab repairs as described below.

- Concrete Slab Crack Repairs are repairs on all exposed horizontal, vertical and overhead surfaces as shown on the Plans or identified by the Resident. Crack repairs are to be performed using the epoxy injection method.

- Partial Depth Concrete Slab Repairs Type I are repairs on all horizontal concrete surfaces above the reinforcing steel as shown on the Plans or identified by the Resident. Concrete slab repairs shall be scheduled and coordinated with the Turnpike Authority.

- Partial Depth Concrete Slab Repairs Type II are repairs on all horizontal concrete surfaces that are at the depth of the reinforcing steel or below the reinforcing steel but less than 6 inches in depth as shown on the Plans or identified by the Resident. Concrete slab repairs shall be scheduled and coordinated with the Turnpike Authority.

- Full depth concrete slab repairs are repairs on horizontal surfaces greater than six inches in depth as shown on the Plans or identified by the Resident. Concrete slab repairs shall be scheduled and coordinated with the Turnpike Authority.

518.03 Repair Materials is re-designated as Subsection 518.02 Repair Materials.

518.02 Repair Materials

The first and second paragraphs are deleted and replaced with the following:

Structural Concrete shall be used for the repair material and shall conform to the requirements of Table 1 of Subsection 502.05 for Class AAA Concrete except as noted herein. All materials used for repair of concrete or reinforcing steel shall meet the applicable requirements of Division 700 as specified in the Standard Specification Sections 502 and 503 respectively. A patching material shall not be used without approval from the Resident.

The third paragraph and Gradation Designation tables are deleted and replaced with the following:

Where the depth of repair is six inches or less, the concrete shall be modified Class AAA and shall conform to Subsection 502.05; except that the coarse aggregate shall be 3/8 inch NMSA and conform to ASTM C33 Grading 89.

The following paragraphs are added:

For epoxy crack repairs, the injection sealant shall be a structural repair resin suitable for injection and submitted to engineer for approval. The sealant must adhere tenaciously to both damp and dry crack surfaces within the concrete. The required minimum structural properties of the material are provided in the table below.

Tensile Strength (@ 7 days)	5,000 psi	ASTM D638
Bond Strength (@ 14 days)	1,000 psi	ASTM C882
Compressive Strength (@ 3 days, 73°F)	5,000 psi	ASTM D695
Compressive Modulus (@ 7 days)	250 ksi	ASTM D695
Flexural Strength (@ 14 days)	8,000 psi	ASTM D790

518.03 Removal of Unsound Concrete

The following paragraphs are added:

In areas of partial and full depth concrete slab repairs and partial depth excavation, the equipment used for removal of unsound concrete shall be chipping hammers weighing a maximum of 35 pounds and only chisel point bits will be allowed. Care shall be taken during the demolition process to ensure the integrity of the surrounding concrete is maintained. The Contractor shall use great care to avoid damaging the existing reinforcing steel during the demolition process. Existing reinforcing steel damaged during the demolition process shall be repaired or replaced by a method approved by the Resident, at no additional cost to the Authority.

The surface preparation for slab repairs are as follows:

a. Mechanically remove concrete to the limits indicated on the Drawings or directed by the Resident.
b. Remove at least two inches of existing concrete facing and continue removal as required to expose sound aggregate. Substrate should have a minimum amplitude of a 1/4 inch. Use light chipping hammers to prepare surface. Limit the size of chipping hammers to 35 lbs (6.8 kg) to reduce micro fractures.
c. Square cut or under cut perimeter of the area to be repaired according to the Drawings. Do not cut existing steel reinforcement.
d. Where reinforcing steel with active corrosion is encountered, comply with the following:

    1. Tool clean reinforcing steel to remove rust and contaminants.
    2. If half or greater of the diameter of the reinforcing steel is exposed, chip-out behind the reinforcing to a one inch minimum depth.

3. Splice new reinforcing steel to existing steel where corrosion has depleted the cross section area by 25 percent as approved by the Resident.

e. Thoroughly abrade the roughened surface and exposed reinforcement to remove all bond inhibiting materials such as rust, dirt, and loose chips. Maintain substrate in a saturated surface dry condition.

f. Final cleaning of the prepared surface shall occur no more than 72-hours prior to placement of the concrete repair material.

The following paragraph is added:

All concrete and other material removed shall be recovered from the Project site and disposed of outside the limits of the turnpike right-of-way. The Contractor shall provide the Resident with an affidavit stating the final location of all disposed material and that the material was disposed of in accordance with Chapter 404 of the Maine Department of Environmental Protection Solid Waste Regulations.

The following Subsection is added:

518.04 Reinforcing Steel

The first paragraph is deleted in its entirety and replaced with the following:

All existing reinforcing steel exposed by concrete removal which is to remain in the structure shall be thoroughly cleaned by sandblasting to an SSPC-SP-6, supplemented by chipping hammers or other means as necessary so that the surfaces are free of rust, scale, mortar and other foreign material, and reasonably free of shadows. The sandblast shall be applied at an angle to the bars so that the embedded steel shall be free of rust and other foreign material to 100 percent of its circumferences. Once the existing reinforcement is cleaned, and prior to casting the repair, all new and existing reinforcing steel shall be coated with an approved epoxy bonding agent. The elapsed time between sandblasting application of the approved epoxy bonding agent shall be a reasonable minimum. Heavily deteriorated reinforcing steel shall be replaced as directed by the Resident.

The following paragraph is added to the end of this Subsection:

Where approved by the Resident, exposed reinforcement shall be depressed to provide 1-1/2 inch clear cover of concrete over the top bars. Minimum clear distance under the bottom of reinforcement bars for horizontal repairs, behind reinforcement bars on vertical repairs, and over the top of reinforcement bars on overhead surfaces, shall meet the requirements of Subsection 518.03. Epoxy coated or plastic reinforcing support chairs shall be provided by the Contractor to support the bars in their specified location. Bars protruding from sound concrete adjacent to a repair area shall be bent up or down within the repair area to obtain the required minimum clear cover.

The following Subsection is added:

518.051 Preparation for Crack Repair

The crack and its surrounding surface, within three inches along each side of the crack, shall be free of oil, solvent, grease, dirt, loose particles, laitance, and foreign matter. Cleaning of above water crack repair areas shall be performed by air blasting, wire brush, and scrapers or other methods approved by the Resident.

Place injection ports along the crack using a high-modulus epoxy adhesive ensuring that injection ports are spaced no more than six inches apart and that the opening of the injection port is not covered by the epoxy. Seal the crack with the epoxy adhesive using a small trowel, by pushing the epoxy into the crack and then feathering the surface so that the epoxy forms a raised profile over the crack and bonds to the adjacent concrete surface. The epoxy adhesive shall cure for the minimum duration recommended by the manufacturer.

518.07 Placing Repair Materials

The following is added after the first paragraph:

All vertical and overhead repair areas shall be formed over the entire surface with quick erecting forms approved by the Resident. The forms shall be held securely in place and be able to withstand the hydrostatic pressure of the fluid concrete of the height to which it is to be placed. Forms shall be built such that the resulting repair will duplicate the original lines of the concrete removed. Form faces shall be of new finished plywood or steel, or other smooth surface as approved by the Resident prior to use. Forms for repair of vertical surfaces will be provided with a top chute, at a maximum spacing of four feet, for providing a compression head of concrete in the form. The overfilled area shall be struck-off flush when forms are removed. Forms shall be placed snugly against the surface of the old concrete at the edges of the patch and shall extend beyond the edges at least three inches. They shall not deflect under the placement of the fresh concrete. Vertical surface repair forms shall remain in place a minimum of 48-hours.

The following paragraphs are added for material batching, mixing and application for pier and abutment repairs:

Batching and mixing:

a. Prepackaged polymer modified mortar shall be mixed and prepared according to manufacturer's instructions.
b. Limitations on time of placement following mixing shall be strictly adhered to.
c. Batching and mixing equipment: This equipment shall be a high pressure, low volume concrete repair pump using the swing tube operating principle.
d. The maximum concrete pressure will be 1,330 psi.
e. The swing tube pump shall be equipped with a pressure reducing valve to reduce the hydraulic pumping pressure and allow the pressure on the forms to be reduced if needed.

Application:

a. Placement techniques – use either "job built" or manufactured form systems to conform to the desired contours of the area to be formed. Apply form release agent or use plastic lined plywood to create a bond breaker at form inner face.
b. Where possible, and at regular intervals, place vents in the form work to monitor material flow and vent excess displaced water.
c. Use a "trap door" or other means to pre-wet the concrete surface to saturated surface dry.
d. Pump the material with a high-pressure, low volume concrete pump. Pump continuously until forms are completely filled. Continue pumping until a 3 to 5 psi increase in normal line pressure is evident and STOP pumping. Form should not deflect. This process may involve multiple valve systems as required to complete the work.
e. Vibrate form while pumping.
f. All vents shall be capped when a steady flow is evident.
g. Leave forms in place during the seven (7) day curing period.

The following paragraphs are added to the end of this Subsection:

Modified Class AAA Concrete may be transit mixed or mixed on-site. The concrete shall be placed in accordance with the provisions of Section 502 except that the pre-plasticized slump shall not exceed three inches. Materials shall be batched by weight. The concrete shall be pumped or hand shoveled into the forms. Internal mechanical vibrators shall be of an approved design and of a size suitable to the work at hand. External vibrators attached to the forms will be permitted if requested, subject to the results obtained. The amount of vibration shall be guided by results obtained from previous placements.

If the concrete cannot be placed satisfactorily, as determined by the Resident, superplasticizers shall be added to the mix as approved by the Resident and at no additional cost to the Authority. After removal of the forms, the concrete shall be smooth rubbed and wet cured and given a smooth rubbed finish.

The following Subsection is added:

518.071 Placing Epoxy Injection Materials

a) Mix epoxy components per manufacturer's instructions. Review pot life characteristics of combined materials and prepare quantities accordingly;
b) Open all injection ports along the crack and ensure that all injection ports are securely fastened to the concrete substrate;
c) Attach injection device to the lowest port on vertical cracks, or the first port in the series on horizontal cracks;
d) Slowly and under constant pressure, inject the epoxy material into the first port until the epoxy flows out of the next port in the series. While maintaining constant pressure and flow at the first port, close the adjacent port and continue injection process until epoxy flows from the subsequent port in the series, or until no additional epoxy can be injected into the first port.
e) Repeat the above procedure until all ports have been injected.

518.10 Method of Measurement

The sixth paragraph is deleted and not replaced.

The following sentences are added:

The quantity of Partial and Full Depth Concrete Slab Repairs will be measured by the square foot and shall be computed as the sum of the products of the average length and width of each area repaired.

The quantity of Concrete Slab Crack Repairs will be measured by the linear foot.

518.11 Basis of Payment

The following paragraphs are added:

Partial Depth Concrete Slab Repairs, and Full Depth Concrete Slab Repairs will be paid for at the Contract unit bid price per square foot for each type of repair; which price shall include, but not necessarily be limited to, removal and disposal of materials; cleaning existing concrete and reinforcing steel; replacing corroded reinforcing steel as directed by the Resident, furnishing, placing and removal of forms, staging, temporary supports where required; placing, curing and finishing new concrete; and, all materials, labor, equipment, tools and incidentals necessary to complete the work. The Contractor shall provide the Resident access in order to identify repair areas.

Concrete Slab Crack Repairs will be paid for at the Contract unit bid price per linear foot; which price shall include, but not necessarily be limited to, cleaning existing concrete; furnishing and installing pressure injection system; placing, curing, and finishing epoxy injection materials; and all secondary materials, labor, equipment, tools and incidentals necessary to complete the work.

Payment will be made under:

Pay Item		Pay Unit
518.64	Concrete Slab Crack Repairs	Linear Foot
518.81	Partial Depth Concrete Slab Repairs Type I	Square Foot
518.82	Partial Depth Concrete Slab Repairs Type II	Square Foot
518.83	Full Depth Concrete Slab Repairs	Square Foot

SPECIAL PROVISION

SECTION 524

TEMPORARY STRUCTURAL SUPPORTS

(Canopy Raising – Interchange 32)

524.01 Description

This Subsection is amended by the addition of the following:

This work shall consist of raising the existing Interchange 32 Toll Plaza Canopy in one unit as shown on the contract plans and in conformity with these specifications. The method of raising, temporarily supporting, and bracing the canopy during raising operations shall be submitted for review and approval.

Prior to cutting any existing columns, the Contractor shall make provisions to prevent redistribution of column loads.

All columns supporting the canopy shall be raised and temporarily supported simultaneously.

This work shall also consist of designing, fabricating, erecting, operating, maintaining, and dismantling the temporary structural supports and jacking/lifting system required to perform the work. The Contractor shall design temporary support system and the jacking/lifting system with a capacity of 150% of the anticipated loads on the canopy structure.

The Contractor shall make provisions to prevent longitudinal, transverse, or rotational movement of the canopy during the raising operations.

524.02 Materials

The following is added after the last paragraph of this Subsection:

Materials used for temporary supports shall be structural grade sawn timber, structural steel, or a combination of both. All temporary support materials, whether new or used, shall be sound and of adequate strength and cross section for the intended loads. All structural steel for the temporary support system shall have a minimum yield strength of 36,000 psi. Permanent components of the canopy shall be as shown on the plans.

524.03 Design

This Subsection is amended by the addition of the following:

The Contractor shall submit plans and calculations for the temporary support system for review and comment prior to commencing the work. All plans and calculations prepared by the Contractor shall be stamped by a Professional Engineer licensed in the State of Maine. The plans

and calculations shall be submitted sufficiently in advance of proposed use to allow for their review and approval, without delay to the Work.

Prior to completing and submitting the formal submission the Contractor may submit the proposed raising concept for review and comment to identify potential points of concern that need to be addressed in the formal submission (plans and calculations) for the temporary structural support system.

Temporary supports shall be configured to support the existing canopy at sufficient locations to prevent overstress or movement of the canopy. Plans and calculations shall include, at a minimum, the proposed location of the temporary supports, proposed method of unloading the structure, assumed design loads, proposed method of preventing translation or rotation of the canopy during raising operations, detailed design calculations, and detailed plans. The design computations shall verify the proposed raising scheme does not introduce unacceptable stresses in any of the existing canopy components including columns, bracing, steel tube cantilevers, purlins, etc. All design computations submitted for approval shall be reviewed, checked, and initialed accordingly. Any support systems requiring attachment to existing concrete shall be subject to approval by the Design Engineer. Details included in the submission plans shall provide for complete fabrication, installation, and removal of the temporary supports.

Temporary supports shall be designed to meet the requirements of AASHTO LRFD Bridge Construction Specifications. When necessary, the effects of snow shall be considered and determined in accordance with ASCE 7-10 Minimum Design Loads for Buildings and Other Structures.

Temporary supports shall be located so as to not interfere with the toll lanes or toll plaza operation. Temporary supports may be located on either the top of the bumper blocks or on existing canopy columns.

The canopy shall not be substantially supported by the temporary structural supports when the traffic is passing under the canopy without prior written approval of the Design Engineer. Furthermore, if canopy is to be temporarily supported when traffic is passing under the canopy, the support shall be secured and protected from errant vehicles.

Removal of lead based paint shall be in accordance with all applicable federal, state and local requirements and Section 105.2.4.2 of the Specifications. The Contractor shall submit a lead based paint removal plan in accordance with Section 105.2.4.2 to the Resident for approval prior to the start of the work.

<u>524.04 Erection and Removal</u> The following paragraphs are added:

The existing canopy shall be raised by the amount shown on the plans. A minimum of two support points shall be used at each booth location. If jacks are used, all jacking shall be synchronized so that all portions of the canopy are raised by approximately equal amounts simultaneously. A maximum of 3/4 inch differential movement between adjacent booth locations will be allowed during the jacking operations. The Contractor shall provide a system to monitor the movement of the canopy to ensure the canopy is within the movement limitations of this specification.

The temporary support system must securely maintain the displacements at each column location, without measureable or noticeable changes under all dead and construction loads, until the canopy loads are transferred to the column extensions.

It shall be the Contractor's responsibility to prevent any damage to the structure from the support system. Should any damage occur as a result of this work, the Contractor shall make repairs at no cost to the Authority. Any such repair work is subject to the approval of the Resident.

All fabrication of structural steel shall be done in conformance with the latest AASHTO, American Welding Society, and MaineDOT Specifications

524.28 Method of Measurement

This section is removed and replaced with the following:

The temporary structural supports for the canopy raising shall not be measured separately for payment, but shall be incidental to Pay Item 800.101 - Raising Canopy - Interchange 32.

SPECIAL PROVISION

SECTION 526

CONCRETE BARRIER

(Temporary Concrete Barrier Type I - Supplied by Authority)

526.01 Description

The following paragraphs are added:

This work shall consist of loading, transporting, setting, resetting, removing, transporting and stacking temporary concrete barrier Type I – supplied by Authority of a shape designated on the Plans. The barrier shall have attachments allowing individual sections to be connected into a continuous barrier.

The work also includes supplying connecting pins and furnishing and mounting retro-reflective delineators, per Subsection 526.03, on both Contractor-supplied and Authority-supplied temporary concrete barriers.

Concrete barriers supplied by Authority shall be available at the following location(s):

Maintenance Area	Linear Feet of Barrier
Crosby Maintenance Area Mile 45.8	1800 lf

Upon substantial completion of work, the Contractor shall remove and transport the concrete barrier - supplied by Authority to back to Auburn Maintenance Area.

526.02 Materials

The following paragraphs are added:

e. Delineators shall be bi-directional with a minimum effective reflective area of eight square inches as approved by the Resident. The reflectors shall be methyl methacrylate and the housing of acrylonitrile butadiene styrene. Color shall be in accordance with the MUTCD.

f. Connecting pins shall be a one inch diameter A36 steel hot rolled round rod that has a four inch long 180 degree bend at the top ("J" shaped). The rod shall be 2'-11" long pre-bend and 2'-7" long post bend.

526.021 Acceptance

The Resident shall have the authority to accept or reject all temporary concrete barrier Type I and temporary concrete barrier Type I – supplied by Authority used on the Project.

526.03 Construction Requirements

The following paragraphs are added:

The Contractor shall notify the Resident prior to the scheduled pick-up and delivery of concrete barrier. No barrier shall be removed from or stacked at the Turnpike's Maintenance Area without approval of the Resident.

The Contractor shall move and place barrier-utilizing methods that will not damage the barrier. Barrier that is damaged by the Contractor by failing to use proper methods shall be replaced by the Contractor at no additional cost to the Authority.

Concrete barrier supplied by the Authority consists of several different styles. Not all barriers may be compatible. The Contractor shall utilize caution when setting barrier to use identical barrier types as adjacent barrier. Non-compatible barrier that cannot be attached together shall be overlapped by a minimum of 10 feet with the blunt end on the non-traffic side of the barrier. This work will not be measured separately for payment, but shall be incidental to the concrete barrier.

Concrete barrier placed at roadway low points shall be shimmed on 1 inch by 2 inch by 2 foot long wood planks to allow drainage to pass under the barrier. In addition, the Resident may direct the Contractor to shim the concrete barrier at other locations to provide for proper roadway drainage. All labor, material, and equipment necessary to shim the barrier will not be measured separately for payment, but shall be incidental to the Concrete Barrier.

Pins connecting the barrier shall be set flush with the top of the barrier.

The removal of concrete barrier from adjacent to the travel lane may be conducted without a lane closure if it is accomplished in accordance with the following requirements:

- Barrier is removed from the trailing end and the workmen and equipment involved in the operation are always behind the barrier. No workmen or equipment shall enter the travel lane.
- Barrier shall be dragged away from the travel lane to at least a 30-degree angle by the use of a cable.
- Barrier shall be lifted no more than six inches while within 10 feet of the travel lane.

Retro-Reflective Delineators shall be mounted as follows:

- One on top of each barrier.
- One on the traffic side of every barrier used in a taper.
- One on the traffic side of every other barrier at regularly spaced intervals and locations.
- Delineators shall be installed on both sides of the barrier if barrier is used to separate opposing traffic.
- Delineators shall be physically adhered so as to withstand the force of throw from a snow plow.

- If more than 25% of delineators in any 50 foot section of barrier fall off for any reason, the Contractor will be responsible for reinstalling all the delineators in that run at that their own cost.
- The Contractor is required to submit the installation method for review and approval to the Resident.

526.04 Method of Measurement

The following paragraphs are added:

Temporary Concrete Barrier Type I – Supplied by Authority shall be measured for payment by the lump sum.

The loading, transporting, setting, resetting, removing, transporting and stacking of the barrier, the furnishing, installation and maintenance of the barrier delineators, and furnishing and installing connector pins will not be measured separately for payment, but shall be incidental to the cost of the Barrier. Temporary storage of Concrete Barrier between construction phases, if required, will not be measured separately for payment, but shall be incidental to the cost of the Barrier. All equipment required to load, unload, transport and stack Concrete Barrier shall be supplied by the Contractor.

Any Barrier lost or damaged by the Contractor shall be replaced by the Contractor at no additional cost to the Authority.

526.05 Basis of Payment

The fifth paragraph is deleted and not replaced.

The following paragraphs are added:

Temporary Concrete Barrier Type I – Supplied by Authority will be paid for at the Contract lump sum price, complete in place. Such payment shall be full compensation for loading, transporting, setting, resetting, temporary storage, removing, transporting and stacking at the area designated, furnishing all materials, and all other incidentals necessary to complete the work. Temporary Concrete Barrier Type I – Supplied by Authority and all connecting pins shall remain the property of the Authority, and shall be returned to the Turnpike Maintenance Area as designated in Subsection 526.01.

Payment of Concrete Barrier shall be based on a percentage of the work accomplished during that pay period.

Payment will be made under:

Pay Item		Pay Unit
526.306	Temporary Concrete Barrier Type I – Supplied by Authority	Lump Sum

SPECIAL PROVISION

SECTION 526

CONCRETE BARRIER

(Concrete Barrier Type I – Stormwater Filter)

526.01 Description

The following sentence is added:

The work also consists of furnishing and installing concrete barrier Type I for use as a weir on the overflow spillway of the Stormwater Soil Filter Beds (USF Detention Basins) as shown on the Plans.

526.02 Materials

The following items are added:

e. Joint between concrete barriers Type I shall be sealed on each side and on top, utilizing a backer rod and Sikaflex – 1a Elastomeric Sealant as manufactured by the Sika Corporation Lyndhurst, New Jersey 07071, telephone 201-933-8800, web site.
f. Concrete for the USF footing shall be Class B (f'c-3000 psi).

The following Subsection is added:

526.031 Construction Requirements – Concrete Barrier Type I - Stormwater Filter

The overflow weir at each Stormwater Filter overflow spillway, at a minimum, shall consist of two 10 foot section of \ concrete barrier type I doweled together and set on a continuous concrete footing. The ends of the barrier shall be flush and any projecting material such as steel loops used for connection pins shall be cut off flush with the concrete. The space between the two abutting barriers shall be sealed with non-shrink grout resulting in a continuous 20 foot concrete barrier. The concrete footing shall be constructed on stable compacted soil. The concrete barrier (overflow weir) shall be set level to the elevations shown on the Plans. Wood or other type shims will not be used to level the barrier.

The \concrete barrier type I for the stormwater filter shall remain on the site at the completion of the Contract.

526.04 Method of Measurement

The following sentence is added:

Concrete Barrier Type I – Stormwater Filter shall be measured for payment by the linear foot of barrier, complete in place.

526.05 Basis of Payment

The fifth paragraph is deleted in its entirety and not replaced.

The following paragraph is added:

Concrete Barrier Type I – Stormwater Filter will be paid for at the Contract linear foot price, complete in place. Such payment shall be full compensation for furnishing, transporting and installing concrete barrier, including connecting dowels, non-shrink grout, concrete footing, and all other incidental materials, labor and equipment, required to complete the work.

Payment will be made under:

Pay Item		Pay Unit
526.307	Concrete Barrier Type I – Stormwater Filter	Linear Foot

SPECIAL PROVISION

SECTION 526

CONCRETE BARRIER

(Temporary Concrete Barrier, Type I - Single Face)

526.01 Description

The following paragraphs are added:

This work shall consist of furnishing, setting, resetting, and removing temporary concrete barrier Type I – Single Face of a shape designated on the Plans. The barrier shall have attachments allowing individual sections to be connected into a continuous barrier and provisions shall be made in the casting of the barrier for attaching the barrier to a concrete slab.

This work shall also consist of furnishing and mounting retro-reflective delineators on the traffic side of every barrier and on top of every second barrier.

526.02 Materials

The following paragraphs are added:

e. Delineators shall be bi-directional with a minimum effective reflective area of eight square inches as approved by the Resident. The reflectors shall be methyl methacrylate and the housing of acrylonitrile butadiene styrene. Color shall be in accordance with the MUTCD.

f. Anchoring material for holding concrete slab anchors, and the subsequent filling of the bolt holes in the concrete slab, shall be selected from the Prequalified List of Anchoring Materials for Type I Reinforcing Steel (> #9) and Anchors (> 1"), and shall be approved by MaineDOT's Transportation Research Division and the Federal & Urban Bridge Program.

526.021 Acceptance

All temporary concrete barrier Type I – Single Face shall meet NCHRP 350 Test Level III crash test requirements. The Resident shall have the authority to accept or reject all temporary concrete barrier Type I – Single Face used on the Project.

526.04 Method of Measurement

The following sentences are added:

The bolting and unbolting of the barrier to the concrete slab will not be measured separately for payment, but shall be incidental to the cost of the Barrier.

The furnishing and installation of barrier delineators will not be measured for payment, but shall be incidental to the cost of the Barrier.

526.05 Basis of Payment

The following paragraphs are added:

The accepted quantities of Temporary Concrete Barrier Type I – Single Face will be paid for at the Contract unit price per foot, complete in place. Such payment shall be full compensation for furnishing all materials, assembling and all incidentals necessary to complete the work.

Payment for Resetting Temporary Concrete Barrier Type I – Single Face shall be full compensation for removing, transporting, temporary storing, resetting and furnishing new parts as necessary. No additional payment shall be made for Temporary Concrete Barrier Type I – Single Face removed and not reset.

Payment will be made under:

Pay Item		Pay Unit
526.308	Temporary Concrete Barrier, Type I - Single Face	Linear Foot

SPECIAL PROVISION

SECTION 526

CONCRETE BARRIER

(Median Barrier Type I)
(Median Barrier Transition Type I)

526.01 Description

This Section is deleted and replaced with the following:

This work shall consist of the furnishing, constructing, erecting, and setting permanent concrete barrier and associated elements in accordance with these Specifications and the lines and grades shown on the Plans or established by the Resident. The length of each precast barrier segment shall be in accordance with the parameters shown on the Plans. The Contractor shall minimize the number of joints in the final barrier assembly to the extent possible.

Median Barrier Type I - Precast Double faced single slope barrier 2'- 0" wide at the base, 48" high and 45" reveal as shown on the Plans.

Median Barrier Transition Type I - Precast Section of barrier to transition from double faced single slope barrier to vertical section for guardrail attachment as shown on the Plans.

526.02 Materials

The second paragraph is deleted in its entirety and replaced with the following:

All concrete Median Barrier and Median Barrier Transitions, except Median Barrier Type II, shall be supplied as precast units produced by an approved commercial precasting plant. Precast concrete shall be Class P, in accordance with Special Provisions, Section 502.05 - Composition and Proportioning, with a minimum compressive strength of 4,500 psi. Cast-in-Place concrete shall be Class AAA-Deck (without synthetic reinforcement) in accordance with Special Provisions, Section 502.05 - Composition and Proportioning, with a minimum compressive strength of 4,500 psi.

Materials for barrier connection assemblies shall be fabricated in accordance with MaineDOT Standard Specification 504. All barrier connection assemblies shall be hot dip galvanized after fabrication in accordance with ASTM A123 and A153.

The second paragraph is amended by the addition of the following:

All reinforcing steel for concrete barrier shall be epoxy coated. Reinforcing steel shall be fabricated and placed in accordance with the Standard Specifications, Section 503.

526.03 Construction Requirements

The first and second paragraphs are deleted and replaced with the following:

All permanent concrete barrier and transition barrier shall be constructed in accordance with the provisions of Special Provision 502 – Composition and Proportioning, through Section 502.15 – Curing Concrete, inclusive, with the following additions:

a. The following is added to Section 502.10 A. – Construction of Forms, after Construction of Forms: "Permanent concrete barrier shall not be formed using slip forming methods. Temporary concrete barrier may be formed by precasting and/or prestressing methods."

The following paragraphs are added after the fourth paragraph:

d. Sections of barrier shall be uniform in color and in good condition, free from cracked or spalled surfaces.

e. Defects shall be divided into two categories, minor defects and major defects. Minor defects in the barrier may be repaired in the field. Major defects shall be cause for rejection of the section or, at the Authority's sole discretion, the section shall be repaired in a manner directed by the Resident.

   Minor defects are defined as holes, honeycombing or spalls which are 6 inch or less, in diameter, and which do not expose the outermost surface of the steel reinforcement. Surface voids 3/8 inch, or less, in diameter and 3/8 inch, or less, in depth are not considered defects and do not require repair.

   Major defects are defined as any defect which does not meet the definition of a minor defect or minor defects which, in aggregate, comprise more than 2% of the surface area of the barrier section.

   The repair of hardened concrete shall be as follows:

   - Minor Defect Repair: Repair shall be made with a fast set non-shrink patching material included on MaineDOT's list of prequalified materials. Methods of repair shall be acceptable to the Resident. The color of the repaired portion shall match as nearly as practicable, the color of the surrounding concrete. Repaired portions shall match shape and tolerance requirements.

   - Major Defect Repair: Major defect repair shall be pre-approved by the Engineer.

The following paragraphs are added at the end of this section:

The layout and placement of the concrete barriers shall be to the alignment and elevations shown on the Plans or as directed. Before any barrier or transitions may be placed, the subbase shall be compacted to 95 percent density and fine graded to a tolerance of +/- 1/2 inch of the true grade at any location under the barrier.

All Cast-in-Place barrier adjacent to precast barriers shall include hardware for the barrier connection as detailed in the Plans.

526.04 Method of Measurement

The following paragraphs are added:

Median Barrier Type I will be measured for payment by the linear foot from end to end of each run of barrier measured along the centerline of the barrier complete in place. No deduction in pay length will be made for joints between abutting barrier sections.

Median Barrier Transition Type I will be measured by each barrier as shown on the Plans.

526.05 Basis of Payment

The following paragraphs are added:

The accepted quantities of Median Barrier Type I will be paid for at the Contract unit price per linear foot, as specified, complete in place. Such payment shall be full compensation for furnishing all material, assembling and all incidentals necessary to complete the work.

The accepted quantities of Median Barrier Transition Type I shall be paid for at the Contract unit price per each, as specified, complete in place.

Payment will be made under:

Pay Item		Pay Unit
526.351	Median Barrier Type I - Precast	Linear Foot
526.361	Median Barrier Transition Type I - Precast	Each

SPECIAL PROVISION

SECTION 527

ENERGY ABSORBING UNIT

(Energy Absorbing System (CAT) – Remove and Reset)

527.01 Description

The following sentences are added:

The remove and reset existing Crash-cushion Attenuating Terminal (CAT) System shall consist of removing the existing CAT at the median opening at Interchange 36 Station 116+50 and resetting to the median opening or a location approved by the Resident.

527.02 Materials

Reflective sheeting shall meet the requirements of Subsection 719.01, Reflective Sheeting - High Intensity Reflective Sheeting, Type III.

527.03 Construction Requirements

A 12" x 36" reflective adhesive sheeting shall be applied to the nose of the CAT System after fabrication. The color of the reflective sheeting shall be amber (yellow) when installed on the inside shoulder (median).

527.04 Method of Measurement

Energy Absorbing System (CAT) will be measured by each unit complete, in place and accepted.

527.05 Basis of Payment

Connection of the CAT Systems to the existing median guardrail or barrier will not be paid for separately, but shall be incidental to Items 527.301 and 527.303.

Energy Absorbing System (CAT) – Remove and Reset will be paid for at the Contract unit price, complete in place and accepted. Payment shall be full compensation for furnishing all labor, equipment, materials and incidentals necessary to complete the work.

Payment will be made under:

Pay Item		Pay Unit
527.303	Energy Absorbing System (CAT) – Remove and Reset	Each

SPECIAL PROVISION

SECTION 527

ENERGY ABSORBING UNIT

(Energy Absorbing System (CAT) – Remove and Stack)

527.01 Description

The following sentences are added:

Removing and stacking existing Crash-cushion Attenuating Terminal (CAT) System shall consist of removing the existing CAT at the Interchange 36 median opening at Station 123+00, transporting and stacking at the Crosby Maintenance Area Mile 46 Southbound.

527.03 Construction Requirements

The Contractor shall make a reasonable effort, as determined by the Resident, to remove all reusable parts prior to stacking.

527.04 Method of Measurement

Energy Absorbing System (CAT) – Remove and Stack will be measured by each unit satisfactorily removed and stacked.

527.05 Basis of Payment

The accepted quantity of Energy Absorbing System (CAT) – Remove and Stack will be paid for at the Contract unit price each satisfactorily removed and stacked. This price shall be full compensation for removing all rails, posts, offset brackets, nuts, bolts, washers, hardware, all labor, transportation and all other incidentals necessary to complete the work.

Payment will be made under:

Pay Item		Pay Unit
527.305	Energy Absorbing System (CAT) – Remove and Stack	Each

SPECIAL PROVISION

SECTION 527

ENERGY ABSORBING UNIT

(Work Zone Crash Cushion)

527.01 Description

The first paragraph is deleted in its entirety and replaced with the following:

The Contractor shall furnish and install work zone crash cushions where shown on the Plans, as specified herein, in Special Provision 652, or as approved by the Resident. Work zone crash cushions are required at each exposed end of temporary concrete barrier or guardrail.

The exposed end of the concrete barrier within 30 feet of the mainline travel lane shall be protected at all times. Barrier shall not be reset until after the work zone crash cushion(s) has been set to protect the exposed end of the barrier.

527.02 Materials

The following paragraph is added:

Only work zone crash cushions meeting the NCHRP Report 350 TL-3 crash test requirements may be used on the turnpike and local roadways with posted speeds of 45 MPH or greater. Work zone crash cushions meeting the NCHRP Report 350 TL-2 crash test requirements may be used on local roadways with posted speeds of 40 MPH or less. The Contractor shall provide the Resident with documentation of the proposed work zone crash cushion's NCHRP Report 350 Crash Test Results prior to installation at the jobsite.

527.03 Construction Requirements

The following is added to the end of the first paragraph:

The design speeds for work zone crash cushions shall be 35 mph for local roads and 65 mph for turnpike roadways unless otherwise noted on the Plans.

527.04 Method of Measurement

Work Zone Crash Cushions used to protect exposed ends of guardrail for concrete girder erection will not be measured separately for payment, but shall be included under the Maintenance of Traffic for Concrete Girder Erection item.

527.05 Basis of Payment

Payment will be made under:

Pay Item		Pay Unit
527.341	Work Zone Crash Cushions – TL-3	Unit
527.342	Work Zone Crash Cushions – TL-2	Unit

SPECIAL PROVISION

SECTION 603

PIPE CULVERTS AND STORM DRAINS

(Reinforced Concrete Pipe)

603.01 Description

The following paragraphs are added:

This work shall also consist of furnishing and installing Class III reinforced concrete pipe at the locations as shown on the Plans or as approved by the Resident. These pipes shall meet the requirements of Subsection 706.02.

Payment will be made under:

Pay Item		Pay Unit
603.155	12 inch Reinforced Concrete Pipe - Class III	Linear Foot

SPECIAL PROVISION

SECTION 604

MANHOLES, INLETS AND CATCH BASINS

(Adjusting Turnpike Manhole or Catch Basin to Grade)

604.01 Description

This Subsection is amended by the addition of the following:

This work shall consist of adjusting catch basins, drainage manholes and sewer manholes within the limits of work to grade in accordance with these Specifications or as approved by the Resident.

604.02 Materials

This Subsection is amended by the addition of the following:

The Class AAA concrete shall conform to Subsection 502.05; except that the minimum cement factor shall be 750 pounds per cubic yard and the coarse aggregate size shall conform to ASTMC33 Grading 7.

Catch Basin Frames and Grates shall be as outlined below and be manufactured by EJ Company of Brockton, Massachusetts or an approved equal and shall meet or exceed the AASHTO M306 Loading Requirements.

Catch Basin Frames shall be manufactured by EJ Company of Brockton, Massachusetts (or an approved equal) with the following product numbers:

5521Z - 8 Inch Frame Product Number 00552111
5546Z – 6 Inch Frame Product Number 00554611
5544Z - 4 Inch Frame Product Number 00554411

Catch Basin Frames shall be 8” frames unless otherwise specified by the plans or approved by the resident.

Catch Basin Grates shall be a square holed grate as manufactured by EJ Company of Brockton, Massachusetts (or an approved equal) with the following product number:

5520M5 Grate Product Number 00552060

If a cascade catch basin grate is specified on the plans then it shall be manufactured by EJ Company of Brockton, Massachusetts (or an approved equal) with the following product numbers depending on the direction of flow:

5520M8 Product Number 00552084 <u>or</u> 5520M8 Product Number 00552085

604.04 Altering, Adjusting, and Rebuilding Catch Basins and Manholes

The first paragraph, including Subparagraphs (b) and (c), are deleted and replaced with the following:

When adjusting the existing catch basins and manholes, they shall be dismantled sufficiently to allow reconstruction in accordance with the following requirements:

The existing frame and grate shall be removed and discarded. Remove and discard all unsound concrete and anchor rods to sound concrete as determined by the Resident. Install two Number 4 dowels, twelve inches in length, in each sidewall, reform catch basin or manhole to necessary grade using AAA Concrete. Reset the existing frame and grate to the finished pavement grade designated by the Resident.

Any frame or grate damaged by the Contractor's operations shall be replaced by the Contractor at no additional cost to the Authority. Replacement material shall meet the requirements of Subsection 604.02. Damaged frames and grates become the property of the Contractor.

604.06 Basis of Payment

The second paragraph is deleted and replaced with the following:

Excavation and backfill will not be measured separately for payment, but shall be incidental to the following pay items:

Payment will be made under:

Pay Item		Pay Unit
604.181	Adjusting Turnpike Manhole or Catch Basin to Grade	Each

SPECIAL PROVISION

SECTION 605

UNDERDRAIN

(PVC Underdrain)
(Underdrain Type B Bedding)

605.01 Description

The following paragraph is added:

This work shall consist of the construction of underdrain for the stormwater filter system using pipe and bedding material in accordance with these Specifications and in reasonably close conformity with the lines and grades on the Plans.

605.02 Materials

The following paragraphs are added:

Material for six inch PVC Underdrain (laterals) shall conform to the requirements of AASHTO M278 or ASTM F949.

Material for eight inch PVC Underdrain (header/outlet pipe) shall conform to Subsection 706.08, PVC Pipe.

Underdrain Type B bedding material shall be well graded, clean, coarse gravel, free from organic matter and meeting Subsection 703.22, Type B with no more than two percent by weight passing the #200 sieve.

605.04 Underdrain Construction

The following paragraphs are added:

The underdrain system to be installed as part of each stormwater filter consists of a series of parallel six inch PVC lateral underdrain pipes connected to an eight inch PVC underdrain header/outlet pipe as shown on the Plans. The underdrain pipe system shall be surrounded by underdrain bedding. A drainage geotextile (as specified in Section 620) shall be placed below the underdrain bedding on a graded, compacted and level base. Drainage geotextile shall also extend vertically along the walls of the underdrain bedding (and also extend vertically along the wall of the Soil Filter). A PVC underdrain cleanout shall be located at the upstream end of the eight inch PVC underdrain header/outlet pipe.

605.06 Method of Measurement

The following sentences are added:

The Underdrain Type B Bedding for the stormwater filter system will be measured for payment by the cubic yard to the neat line dimensions shown on the Plans.

Drainage geotextile fabric will not be measured separately for payment, but shall be incidental to Item 605.04.

605.07 Basis of Payment

The following paragraphs are added:

Payment for Underdrain Type B Bedding will be made at the Contract unit price per cubic yard in place. Payment will be full compensation for furnishing and placing bedding, and all labor and equipment necessary to complete the work.

Payment will be made under:

Pay Item		Pay Unit
605.016	6 Inch PVC Underdrain	Linear Foot
605.018	8 Inch PVC Underdrain	Linear Foot
605.040	Underdrain Type B Bedding	Cubic Yard
605.090	6 Inch Underdrain Type B	Linear Foot

SPECIAL PROVISION

SECTION 606

GUARDRAIL

(Bridge Transition- Type III)

606.01 Description

The following sentence is added:

This work shall consist of furnishing and installing Type III guardrail bridge attachments at bridge endposts on bridges over the turnpike.

The following Subsection is added:

606.071 Guardrail Attachments at Bridges

Bridge transition - Type III shall be used at bridge endpost locations.

606.08 Method of Measurement

The following sentence is added:

Guardrail attachment will be measured by each unit of the type specified, installed and accepted.

606.09 Basis of Payment

The following paragraphs are added:

Bridge Transition - Type III will be paid for at the Contract unit price each complete in place and shall be full compensation for furnishing all labor, equipment and materials necessary to complete the work consisting of, but not necessarily limited to, the following: furnishing and installing guardrail, one terminal connector, including terminal connector anchorage and all other detailed accessories; furnishing and installing all required posts, rails, offset brackets, back-up plates, nuts, bolts, washers, and all other items necessary to make for a complete installation as shown on the Plans or as approved by the Resident.

Payment will be made under:

Pay Item		Pay Unit
606.1723	Bridge Transition - Type III	Each

SPECIAL PROVISION

SECTION 606

GUARDRAIL

(Guardrail Beam)

606.01 Description

The following paragraph is added:

This work shall consist of furnishing and installing proposed guardrail W-beam panels (RE-3) to replace existing damaged and rusty panels as approved by the Resident. The Contractor shall mark rail to be replaced for Resident's approval prior to the replacement of the rail.

606.02 Materials

The following sentence is added:

The materials for the W-beam panels shall conform to Subsection 710.04.

606.08 Method of Measurement

The following sentence is added:

Guardrail Beams shall be measured per linear foot installed and accepted.

606.09 Basis of Payment

The following paragraph is added:

The Guardrail Beams will be paid for at the Contract unit price per linear foot complete in place and shall be full compensation for furnishing all labor, equipment and materials necessary to complete the work. This work shall consist of furnishing and installing the new W-beam panels, all hardware, nuts, bolts, washers, and all other items necessary to complete the installation and connection to the posts.

Payment will be made under:

Pay Item		Pay Unit
606.178	Guardrail Beam	LF

SPECIAL PROVISION

SECTION 606

GUARDRAIL

(Guardrail Type 3d – Double Rail)

606.01 Description

The following paragraph is added:

This work shall consist of furnishing and installing proposed guardrail Type 3d panels to replace existing damaged and rusty panels as approved by the Resident. The Contractor shall mark rail to be replaced for Resident's approval prior to the replacement of the rail.

606.02 Materials

The following sentence is added:

The materials for the Type 3d panels shall conform to Subsection 710.04.

606.08 Method of Measurement

The following sentence is added:

Guardrail Beams shall be measured per linear foot installed and accepted.

606.09 Basis of Payment

The following paragraph is added:

The Guardrail Type 3d – Double Rail will be paid for at the Contract unit price per linear foot complete in place and shall be full compensation for furnishing all labor, equipment and materials necessary to complete the work. This work shall consist of furnishing and installing the new Guardrail Type 3d – Double Rail panels, all hardware, nuts, bolts, washers, and all other items necessary to complete the installation and connection to the posts.

Payment will be made under:

Pay Item		Pay Unit
606.2401	Guardrail Type 3d – Double Rail	LF

SPECIAL PROVISION

SECTION 606

GUARDRAIL

(Terminal End – Anchored End)

606.01 Description

The following sentence is added:

This work shall also consist of furnishing and installing terminal end – anchored end, end treatments in accordance with these Specifications, the AASHTO-AGC-ARBTA Joint Committee Task Force 13 Report: A Guide to Standardized Highway Barrier Hardware, dated May 1995; and in reasonably close conformity with the lines and grades as shown on the Plans or as approved by the Resident.

606.02 Materials

The following sentence is added:

The guardrail elements shall be per the Components' List found on Sheet No. 2 of 2 of Drawing SEW02a – Trailing End Terminal – Foundation Tube Option in the Task Force 13 Report noted above.

The following Subsection is added:

606.042 Terminal End – Anchored End

Installation of the terminal end – anchored end shall be in strict accordance with the AASHTO-AGC-ARBTA Joint Committee Task Force 13 Report and the Details on Sheet No. 1 of 2 of Drawing SEW02a – Trailing End Terminal – Foundation Tube Option.

606.08 Method of Measurement

The second paragraph is amended by the addition of: ", Terminal End – Anchored End," after the words "breakaway cable terminal".

606.09 Basis of Payment

The second paragraph is amended by the addition of: ", Terminal End – Anchored End," after the words "breakaway cable terminal".

Payment will be made under:

Pay Item		Pay Unit
606.278	Terminal End – Anchored End	Each
606.279	Terminal End – Anchored End, Thrie Beam	Each

SPECIAL PROVISION

SECTION 606

GUARDRAIL

(Reflectorized Beam Guardrail Delineator)

606.01 Description

The following paragraphs are added:

Reflectorized beam guardrail delineators shall be installed on existing guardrail to remain in place, guardrail noted to be removed, modified and reset (single and/or double rail) or new guardrail, at the locations noted on Maintenance of Traffic plans or as approved by the Resident. The delineators shall be installed prior to traffic being shifted closer to the identified guardrail run. The color for the reflective sheeting shall be silver (white) when installed on the outside shoulder and yellow when installed on the inside shoulder.

Reflectorized beam guardrail delineators shall be mounted as follows:

1. Delineators on guardrail adjacent to a shifted detour should be spaced every other guardrail post and located at the bolt in the valley of the guardrail beam.

2. On existing steel bridge rail, the delineators shall be mechanically attached towards the top, every 10 feet, and bottom, every 20 feet. Delineators shall also be mechanically attached in a similar pattern to concrete endposts that are 10 feet or longer.

3. If more than 25% of delineators in any 50 feet of guardrail, bridge rail, or endposts fall off for any reason, the Contractor will be responsible for reinstalling all delineators in that run at that their own cost.

4. In no instance shall delineators be installed on guardrail which deviates substantially from the alignment (horizontal or vertical) of the roadway or which is located more than eight feet from the edge of pavement.

Exceptions and/or modifications will only be made with the approval of the Resident.

Contractor is required to submit installation method for review and approval to the Resident.

606.02 Materials

The fourth paragraph is deleted and replaced with the following:

The reflectorized beam guardrail delineators shall be fabricated from high-impact, ultraviolet and weather resistant thermoplastic.

606.08 Method of Measurement

The following paragraph is added:

Reflectorized Beam Guardrail Delineators will be measured by each unit of the kind specified and installed. Maintenance and replacement of delineators will not be measured separately for payment unless otherwise approved by the Resident.

606.09 Basis of Payment

The second and third sentences in the first paragraph are deleted and replaced with the following:

Reflectorized Beam Guardrail Delineators will be paid for at the Contract unit price each, complete in place, which price shall be full payment for furnishing and installing all components and for all incidentals necessary to complete the installation.

Payment will be made under:

Pay Item		Pay Unit
606.352	Reflectorized Beam Guardrail Delineator	Each

SPECIAL PROVISION

SECTION 606

GUARDRAIL

(Delineator Post)
(Remove and Reset Delineator Post)

606.01 Description

The following paragraphs are added:

This work shall also consist of furnishing and installing new delineator posts and/or removing and resetting existing delineator posts within the Contract limits. The existing reflectorized delineator panels on reset posts shall be removed and replaced with new reflectorized delineator panels as required by the Resident.

Existing and reset delineator posts shall be located as follows:

Outside Shoulder:

- One at guardrail trailing ends (green delineator).
- Two at guardrail approach ends (red delineators at face end and first angle point, FLEAT red on traffic side).
- One at guardrail attachments to endposts (white delineator).

Median:

- One at guardrail trailing ends (green delineator).
- Two at guardrail approach ends (red delineators at face end and first angle point, CAT or FLEAT MT red on both sides).
- One at guardrail attachments to endposts (yellow delineator).

Other Locations:

- One at culvert outlets (red delineator).
- Twenty per mile evenly spaced at the edge of outside shoulder (white delineator).
- One at electrical junction boxes not associated with another item (blue delineator).

Delineator posts that do not exist in the locations described above, shall be supplied and installed by the Contractor. The installation of the delineator post shall include the demountable reflectorized delineator.

Delineator posts shall be bolted to the back of the first wood post in the FLEAT 350's, CAT systems and FLEAT MT systems.

606.02 Materials

The following paragraphs are added:

Non-guardrail guardrail delineator posts shall conform to Subsection 606.02.

Guardrail delineator posts for the approach ends of 350 compliant end treatments shall be fabricated of a flexible, durable, non-discoloring polyethylene plastic capable of recovering from repeated impacts and resistant to solar degradation. The posts shall be a minimum of two inches in diameter, shall be ovalized at the top of the post to allow application of reflective sheeting, and shall be a maximum length of 36 inches. Color of the guardrail delineator posts shall be grey. Posts shall be capped at the top with a flexible rubber cap; Safe-Hit Flexible Guardrail Delineator Post or an approved equal.

Reflective sheeting shall be applied to the top of the post and the color of the sheeting shall be as described in section 606.01. Dimensions of sheeting shall be three inches by eight inches and shall conform to ASTM Type XI; 3MTM Diamond GradeTM DG3 Reflective Sheeting Series 4000 or an approved equal.

Guardrail delineator posts shall be fastened to guardrail posts with two fasteners. For wooden posts, two 3 inch by 3/8 inch lag screws with 5/8 inch flat washers shall be used. For steel guardrail posts, two self-drilling 1/4 inch by two inch screws with 5/8 inch flat washers shall be used.

The demountable reflectorized delineator panel shall meet the requirements of Subsection 719.06. Delineator panel shall be rectangles measuring eight inch x three inch.

606.03 Posts

The following paragraphs are added:

The installation of delineator posts shall conform to Subsection 606.03 for guardrail delineator posts.

The top of delineator posts associated with guardrail shall be installed 5’-0” (60 inches) above edge of pavement elevation. White delineator posts for mile delineation shall be 4’-6” (54 inches) above edge of pavement elevation. Delineators shall be installed four feet from edge of pavement except those delineating end treatments, culverts and electrical items.

Mile marker post shall be mounted on breakaway supports. The bottom of the sign shall be five feet from the solid white line and shall be offset five feet from the edge of pavement.

A mock-up of the guardrail delineator posts shall be submitted to the Resident for approval prior to installation.

Any materials damaged by the Contractor’s operations shall be replaced at no additional cost to the Authority.

Top of the delineator panel shall be flush with the top of post.

606.08 Method of Measurement

The following paragraphs are added:

Delineator Posts shall be measured by each unit installed and accepted. Delineator Posts Removed and Reset will be measured by each unit satisfactorily reset.

Mile Marker post shall be measured for payment as Delineator Post.

606.09 Basis of Payment

The following sentences are added:

The accepted quantity of Delineator Posts will be paid for at the Contract unit price per each which price shall be full compensation for the post, specified delineator or mile marker panel, complete in place.

The accepted quantity of Delineator Posts Removed and Reset will be paid for at the Contract unit price each, which price shall be full compensation for removing and resetting delineator panel or mile marker panel and posts and all incidentals necessary to complete the work.

Payment will be made under:

Pay Item		Pay Unit
606.353	Delineator Post	Each
606.354	Delineator Post - Remove and Reset	Each

SPECIAL PROVISION

SECTION 606

GUARDRAIL

(Guardrail – Remove and Reset)

606.01 Description

The following paragraphs are added:

This work shall consist of removing existing guardrail elements, component parts and hardware and resetting.

New non-wood offset blocks conforming to NCHRP 350 Test Level 3 shall be installed on all guardrail being reset. The existing steel offset brackets and backup plates shall become the property of the Contractor.

The following Subsection is added:

606.021 General

The reset guardrail shall be installed in accordance with the applicable provisions of the Standard Specifications.

The materials removed shall be utilized in the reset guardrail locations with the following exceptions:

- Existing guardrail posts found to be unfit for reuse, in the opinion of the Resident, prior to or upon pulling;
- Existing steel backup plates when present;
- Existing steel offset brackets shall be replaced with non-wood offset blocks; and,
- Existing W-beam rail elements damaged by traffic and unfit for reuse, in the opinion of the Resident.

This work shall include all modifications to the existing guardrail system that may be necessary to install new non-wood offset blocks including, but not necessarily limited to, the drilling of new holes in the existing posts and cleaning and painting holes with a cold-applied zinc-rich paint. The completed guardrail assembly shall conform to NCHRP 350 Test Level 3.

Existing guardrail components removed, but not reset because of damage, shall become the property of the Contractor. Any materials lost or damaged by the Contractor's operations shall be replaced at no additional cost to the Authority.

Earth around each reset post shall be raked and compacted with a minimum 8 pound hand tamper or an approved device. Holes created due to resetting a post shall be filled with a similar surrounding material and compacted.

606.08 Method of Measurement

The following paragraphs are added:

Guardrail – Remove and Reset will be measured on a linear foot basis, from center-of-post to center-of-post, for the amount of rail satisfactorily reset.

Steel posts to replace damaged posts shall come from the stockpile of guardrail components to be disposed of, from this Contract and will not be measured separately for payment. If, in the opinion of the Resident, there are no suitable steel posts in the stockpile then steel posts will be measured for payment.

W-beam rail elements to replace damaged rail elements shall come from the stockpile of guardrail to be disposed from this Contract and will not be measured separately for payment. If, in the opinion of the Resident, there are no suitable W-beam rail elements in the stockpile then W-beam rail elements will be measured for payment.

606.09 Basis of Payment

The following paragraphs are added:

The accepted quantity of Guardrail – Remove and Reset will be paid for at the Contract unit price bid per linear foot. Such payment shall be full compensation for removing, and resetting guardrail, drilling holes in existing posts, and all equipment, labor and incidentals necessary to complete the work including any necessary modifications to the existing posts.

New steel posts, when measured for payment, will be paid for under Item 606.48, Single Galvanized Steel Post.

New W-beam rail components, when measured for payment, will be paid for under Item 606.178, Guardrail Beam.

Payment will be made under:

Pay Item		Pay Unit
606.3607	Guardrail – Remove and Reset, Single Rail	Linear Foot
606.3608	Guardrail – Remove and Reset, Double Rail	Linear Foot

SPECIAL PROVISION

SECTION 606

GUARDRAIL

(Guardrail – Remove, Stack and Dispose)

606.01 Description

The following paragraph is added:

This work shall consist of removing, stockpiling for reuse, and disposing of 'unsuitable for reuse' existing single and double guardrail elements, component parts and hardware as approved by the Resident. Existing guardrail, component parts and hardware suitable for reuse shall be stacked on-site and reused within the project limits as approved by the Resident per Specification 606.3605. At the completion of the Contract, any unused guardrail elements, posts, component parts and hardware suitable for reuse as approved by the Resident shall be transported and stacked at the Authority's Maintenance yard in Gardiner. All remaining existing unsuitable guardrail elements, posts, component parts and hardware shall become the property of the Contractor and shall be removed from turnpike property.

606.08 Method of Measurement

The following paragraph is added:

Guardrail remove, stack, and dispose will be measured on a linear foot basis of guardrail satisfactorily Removed, Stacked and/or Disposed whether single rail or double rail. Double twisted end sections will be measured for payment on a linear foot basis as 25 feet of guardrail removed.

606.09 Basis of Payment

The following paragraphs are added:

The accepted quantity of guardrail remove, stack and dispose will be paid for at the Contract unit price bid per linear foot, which price shall be full compensation for removing, stacking, transporting and disposing all guardrail elements, component parts and hardware, equipment, labor and all incidentals necessary to complete the work. No additional payment will be made for double rail. Stockpiling existing rail elements, posts, and component parts will not be measured separately for payment, but shall be incidental to Item 606.3631.

Payment will be made under:

Pay Item		Pay Unit
606.3631	Guardrail – Remove, Stack and Dispose	Linear Foot

SPECIAL PROVISION

SECTION 606

GUARDRAIL

(Single Offset Block – W-Beam)

606.01 Description

The following paragraph is added:

This work shall consist of furnishing and installing single offset blocks at all existing guardrail beam locations that are part of a remove, modify and reset location. New non-wood offset block will be installed on existing galvanized steel posts and connected to Guardrail Type 3d.

606.02 Materials

The following sentence is added:

Offset block shall have passed NCHRP 350 Test Level 3 and shall not be wood.

The following Subsection is added:

606.021 General

The existing median guardrail posts have four off-center bolt holes used to attach the existing steel offset blocks. The new offset blocks have two bolt holes centered on the W-beam section. The existing posts must be retrofitted to receive the new non-wood offset block assembly. Additional bolt holes required in the existing posts shall be drilled or punched but the size shall not exceed the dimension given by the manufacture. Metal around the holes shall be cleaned and painted with a cold-applied zinc-rich paint. The holes shall not be burned with a torch.

The completed guardrail system shall be in conformance with the NCHRP 350 Test Level 3 requirements.

606.08 Method of Measurement

The following paragraph is added:

Single Offset Block shall be measured per each unit installed and accepted. All equipment and labor associated with retrofitting the existing posts shall be incidental to Item 606.471.

606.09 Basis of Payment

The following paragraph is added:

New Single Offset Block furnished and installed at specified locations will be paid for at the Contract unit price each complete in place and accepted. Payment shall be full compensation for furnishing all labor, equipment and materials necessary to complete the work including, but not necessarily limited to, removal of existing rail beam, removal and disposal of existing offset block, drilling new holes in existing post, application of galvanized paint, furnishing and installing new non-wood offset block, removal and disposal of back-up plates, and resetting the rail beam.

Payment will be made under:

Pay Item		Pay Unit
606.471	Single Offset Block – W-Beam	Each

SPECIAL PROVISION

SECTION 606

GUARDRAIL

(Guardrail Thrie Beam - Double Post, Nested Rail)

606.01 Description

The following paragraphs are added:

This work shall consist of install thrie beam - Double Post, Nested Rail removing existing guardrail elements, component parts and hardware and resetting.

The following Subsection is added:

606.021 General

The Guardrail Thrie Beam - Double Post, Nested Rail shall be installed in accordance with the applicable provisions of the Standard Specifications.

Earth around each reset post shall be raked and compacted with a minimum 8 pound hand tamper or an approved device. Holes created due to resetting a post shall be filled with a similar surrounding material and compacted.

606.08 Method of Measurement

The following paragraphs are added:

Guardrail Thrie Beam - Double Post, Nested Rail will be measured on a linear foot basis, from center-of-post to center-of-post, for the amount of rail satisfactorily installed.

606.09 Basis of Payment

The following paragraphs are added:

The accepted quantity of Guardrail Thrie Beam - Double Post, Nested Rail will be paid for at the Contract unit price bid per linear foot. Such payment shall be full compensation for installing thrie beam - double post, nested rail ting guardrail and all equipment, labor and incidentals necessary to complete the work including any necessary modifications to the existing posts.

Payment will be made under:

Pay Item		Pay Unit
606.651	Guardrail Thrie Beam - Double Post, Nested Rail	Linear Foot

SPECIAL PROVISION

SECTION 606

GUARDRAIL

(Asymmetrical Thrie Beam Transition)

606.01 Description

The following paragraph is added:

This work shall consist of removing and stacking existing thrie beam transition panels, furnishing and installing the asymmetrical thrie beam to W-beam transition, single rail - modified section and double rail modified section, connecting it to the existing or proposed W-Beam guardrail and thrie beam modified at locations on the Maine Turnpike, as shown on the Plans or as approved by the Resident. All guardrail components shall have passed the NCHRP 350 Test Level 3. Composite offset blocks shall be used.

606.08 Method of Measurement

The following sentence is added:

Asymmetrical Thrie Beam Transition shall be measured by each unit installed and accepted. The double rail transition consists of two units, one on each side.

606.09 Basis of Payment

The following paragraphs are added:

Asymmetrical Thrie Beam Transition will be paid for at the Contract unit price each complete in place, and shall be full compensation for furnishing all labor, equipment and materials necessary to complete the work consisting of, but not necessarily limited to, furnishing and installing the Asymmetrical Thrie Beam to W-beam Transition, Single Rail - Modified section and Double Rail – Modified Section, and all detailed accessories; furnishing and installing all required posts, modified steel, wood or composite offset blocks, cables, nuts, bolts, washers, and all other items necessary to complete the installation and connection to the existing or proposed W-Beam and the Thrie Beam – Modified.

Payment will be made under:

Pay Item		Pay Unit
606.701	Asymmetrical Thrie Beam Transition	Each

SPECIAL PROVISION

SECTION 606

GUARDRAIL

(Guardrail 350 FLEAT Terminal)
(Guardrail 350 FLEAT Terminal – Remove and Reset)

606.01 Description

The following sentences are added:

This work shall also consist of furnishing and installing a Guardrail 350 FLEAT (Flared Energy Absorbing Terminal) as manufactured by Road Systems, Inc., 1507 East 4th Street, Big Spring, Texas 79720, (915) 263-2435, and retroreflective adhesive sheeting in accordance with these Specifications and in reasonably close conformity with the lines and grades as shown on the Plans or as approved by the Resident.

This work shall also consist of removing, storing during construction and resetting existing FLEATs.

606.02 Materials

The following sentence is added:

The retroreflective sheeting shall meet the requirements of Subsection 719.01, Reflective Sheeting – Minimum ASTM, Type VII.

The following Subsections are added:

606.03 Posts

Wood offset blocks shall be toe-nailed to the wood post to prevent the blocks from moving.

606.041 Reflective Sheeting

The color for the reflective sheeting shall be silver (white) when installed on the outside shoulder.

606.08 Method of Measurement

The second paragraph is amended by the addition of: "Guardrail 350 FLEAT Terminal" after the words "breakaway cable terminal".

Guardrail 350 FLEAT Terminal – Remove and Reset will be measured by each unit satisfactorily reset complete in place and accepted.

606.09 Basis of Payment

The second paragraph is amended by the addition of: "and Guardrail 350 FLEAT Terminal" after the words "breakaway cable terminal".

Guardrail 350 FLEAT Terminal – Remove and Reset will be paid for at the Contract unit price, complete in place and accepted. Payment shall be full compensation for all labor, equipment, materials and incidentals necessary to remove, store during construction and reset in accordance with the Plans and Specifications.

The retroreflective sheeting will not be measured separately for payment, but shall be incidental to the Guardrail 350 FLEAT Terminal item.

Payment will be made under:

Pay Item		Pay Unit
606.80	Guardrail 350 FLEAT Terminal	Each
606.81	Guardrail 350 FLEAT Terminal – Remove and Reset	Each

SPECIAL PROVISION

SECTION 607

FENCES

(Snow Fence – Interchange 36)

607.01 Description

The following sentence is added:

The work shall include the installation of a six foot tall snow fence at Interchange 36 between the toll utility building and the guardrail adjacent to the exit lanes as shown on the Plans.

607.02 Materials

The following paragraph is added:

The snow fence shall consist of galvanized chain link fence mesh and frame at a height of six feet. Posts and rails shall be SS-40 galvanized metal of the size shown on the Plans. All accessories such as corner clamps, end caps, bars, tension members, fasteners, tie wire, etc. shall be galvanized.

607.06 Method of Measurement

The following paragraph is added:

Snow Fence will be measured by the linear foot accepted in place.

607.07 Basis of Payment

The accepted quantities of Snow Fence shall be paid for at the contract unit price per foot of Snow Fence. Payment shall be full compensation for furnishing and installing all materials as shown on the Plans including labor tools and incidentals required to complete the installation.

Payment will be made under:

Pay Item		Pay Unit
607.4311	Snow Fence – Interchange 36	Linear

SPECIAL PROVISION

SECTION 609

CURBING

(Concrete Curb Type 2)

609.01 Description

The following sentences are added:

This work shall consist of furnishing and installing Concrete Curb Type 2 in accordance with these Specifications and in reasonably close conformity with the lines, grades and locations as shown on the Plans or as approved by the Resident.

This work shall also consist of all excavation and backfill necessary to install the proposed curb as shown on the Plans.

609.02 Materials

The following sentence is added:

Backfill shall be Aggregate Subbase Course Gravel Type D in conformance with Subsection 304.02.

609.19 Method of Measurement

The following sentences are added:

Concrete Curb Type 2 shall be measured by the linear foot along the front face of the curb at the elevation of the finished grade, complete in place and accepted.

Excavation and backfill associated with curb installation shall be incidental to Item 609.191, Concrete Curb Type 2.

609.10 Basis of Payment

Payment will be made under:

Pay Item		Pay Unit
609.191	Concrete Curb Type 2	Linear Foot

SPECIAL PROVISION

SECTION 610

STONE FILL, RIPRAP, STONE BLANKET AND STONE DITCH PROTECTION

(Stone Check Dams)

610.01 Description

Paragraph (f) is deleted and replaced with the following:

(f) Stone Ditch Protection - Machine placed stones on an earth or granular bedding at stone line ditches, stone downspouts and stone check dams.

This work shall also include the placement, removal and storage of the stone used for temporary and/or permanent stone check dams.

610.032 Placing Stones

The following paragraph is added:

Stone check dams shall be constructed in accordance with the details as shown on the Plans or as approved by the Resident. The stone shall be placed in one operation without special handling or handwork except to create a low point along the top gradient above the ditch flow lines.

The following Subsection is added:

610.033 Removing Stone

The stone for temporary stone check dams shall be removed after vegetation has been established in the ditches as approved by the Resident.

Any damage to the slopes and ditches caused by the removal of the stone check dams shall be repaired by the Contractor at his own expense.

The area directly under the temporary stone check dams shall be loamed, seeded and mulched immediately after the removal of the stone check dams. The loam, seed and mulch will be measured for payment under the appropriate pay items.

Stone used for temporary stone check dams shall be removed and stored and shall become the property of the Contractor at the completion of the Project.

The following Subsection is added:

610.034 Maintenance

Stone check dams shall be maintained by the Contractor. Sediment deposits behind check dams shall be removed when the depth of sediment reaches 50 percent of the check dam height.

610.05 Method of Measurement

The following paragraphs are added:

Stone for Permanent Stone Check Dams will be measured by the cubic yard complete in place.

Stone for Temporary Stone Check Dams will be measured by the cubic yard complete in place. The removal and storage of the stone will not be measured separately for payment, but shall be incidental to the Temporary Stone Check Dam item. This shall include the transporting and unloading of the stone. If this stone is reused on the Project, it will be measured for payment under the appropriate pay item.

The removal and disposal of sediment from behind the Temporary Stone Check Dams will not be measured separately for payment, but shall be incidental to the Stone Check Dam item.

610.06 Basis of Payment

The following sentences are added:

The accepted quantities of stone for Temporary and/or Permanent Stone Check Dams will be paid for at the Contract unit price per cubic yard.

Excavation will not be required for the placement of stone for Stone Check Dams.

Payment will be made under:

Pay Item		Pay Unit
610.181	Temporary Stone Check Dam	Cubic Yard

SPECIAL PROVISIONS

SECTION 618

SEEDING

(Special Seeding)

618.02 Materials

The following paragraph is added:

Special Seed (wetland seed mix-moist) shall be "New England Erosion Control/Restoration Mix for the USF Detention basins and Moist Sites" as supplied by New England Wetland Plants, Inc., Amherst, MA or an approved equal. All fertilizers, soil conditioners, limestone and other materials required to germinate, initiate and sustain seed growth shall be materials recommended by New England Wetland Plants, Inc. or other approved seed manufacturer as determined by the Resident.

618.03 Rate of Application

Subsection (a) is deleted and replaced with the following:

(a) Except for Special Seed mix, agricultural ground limestone shall be applied at the rate of 33 pounds per unit for all seeding methods. Liquid lime shall be applied at the rate of 1/2 pint per unit for hydraulic method. A 1/2 pint of liquid lime shall be mixed with five pints of water.

Subsection (g) is added:

g. At a minimum, the Special Seeding shall be applied at twice the seed manufacturer's recommended application rate. Fertilizers, limestone and other soil conditioners shall be applied at the manufacturers recommended rate. The Special Seed mix shall be applied directly on top of the horizontal surface of the Soil Filter (i.e., the blended mix) and lightly raked into the mix. On the sloping surfaces surrounding the soil filter up to a height of 1.5 feet above the top of the soil filter, wetland seed shall be placed on a four inch layer of loam and lightly raked into that material. All seed shall be covered by a temporary erosion Control blanket immediately after seeding.

618.10 Maintenance and Acceptance

The second paragraph is deleted and replaced with the following:

The Contractor shall water the special seed as necessary and shall insure he continued growth of the special seed. The Authority will accept areas sown with Special Seed upon attainment of a reasonably thick stand of grass with at least 90 percent coverage, free from sizable thin or bare spots. Areas not meeting this requirement shall be reseeded and shall comply with Subsections 618.03 through 618.09.

618.12 Basis of Payment

The first paragraph is deleted and replaced with the following:

The Authority will pay for the accepted quantity of Special Seed at the Contract price per unit, which price shall be full compensation for furnishing and spreading seed, limestone fertilizer, and inoculants. The price shall also include any reseeding, watering, and maintenance necessary to meet the requirements of Section 618.10, Maintenance and Acceptance.

SPECIAL PROVISION

SECTION 619

MULCH

619.01 Description

The first paragraph is modified by the addition of the following:

"as a temporary or permanent erosion control measure" after the word "mulch".

619.03 General

The first paragraph is deleted and replaced with the following:

Cellulose fiber mulch shall not be used within 200 feet of a wetland or stream. The limits shall be 200 feet upstation and downstation of the wetland or streams as well as the slopes adjacent to the stream. The application of hay or straw mulch with an approved binder shall be used at these locations to prevent erosion.

The use of cellulose fiber mulch will only be allowed at other areas with the approval of the Resident. The Contractor may be required to demonstrate that the material may be applied in a manner that will prevent erosion and will aid in the establishment of permanent vegetation. The Resident reserves the right to require the use of hay or straw mulch at all locations if he determines that the cellulose mulch is ineffective. Cellulose fiber mulch is not acceptable for winter stabilization.

619.04 Applying Mulch

The third paragraph is deleted and replaced with the following:

Newly disturbed earth and ditches shall be mulched or otherwise stabilized by the end of each work day and maintained on a daily basis as described in Subsection 105.8.1.11 (b) in the Special Provisions. The Contractor is responsible for applying temporary mulch as necessary, in accordance with the latest edition of the BMP's, to minimize soil erosion prior to the application of the final slope treatment.

Temporary mulch applied during the winter months of November 1st through April 15th shall be applied at twice the standard temporary stabilization rate or 150 lbs. per 1,000 square feet or three tons/acre. Mulch shall not be spread on top of snow and shall be anchored with mulch netting on slopes steeper than eight percent unless erosion control blankets or erosion control mix is being used on the slopes.

The Contractor shall review his construction operations and staging to determine how much temporary mulching is required.

619.06 Method of Measurement

The following sentence is added:

Temporary Mulch will be paid for by the lump sum.

619.07 Basis of Payment

The following paragraphs are added:

Temporary Mulch will be paid for at the Contract price per lump sum which shall be full compensation for furnishing and spreading the Temporary Mulch as many times as necessary as determined by the Contractor's operations and staging. The price shall also include the additional mulch netting and snow removal necessary during the winter months.

Payment will be made under:

Pay Item		Pay Unit
619.1202	Temporary Mulch	Lump Sum

SPECIAL PROVISION

SECTION 627

PAVEMENT MARKINGS

(Temporary Pavement Markings - Tape)

627.01 Description

The following sentence is added:

This work shall also consist of furnishing, placing, maintaining and removing temporary pavement marking tape at for maintenance of traffic purposes as shown on the Plans or as directed by the Resident.

Temporary pavement marking tape is scheduled for all temporary pavement markings.

627.02 Materials

The following paragraph is added:

Temporary pavement marking tape shall be Stamark Wet Reflective Removable Pavement Marking Tape Series 710 as manufactured by 3M of St. Paul, Minnesota.

627.04 General

The following paragraphs are added:

Work under this item shall be in accordance with the manufacturer's recommendations. A factory representative from 3M shall be present for the first application of all temporary pavement marking tape to insure proper application and product performance.

The pavement markings shall be applied mechanically to clean dry pavement as recommended by the manufacturer and approved by the Resident.

Temporary pavement markings shall consist of applying six inch solid white, six inch broken white, and six inch yellow reflectorized pavement marking tape for traffic maintenance during construction as shown on the Plans or as directed by the Resident.

Temporary pavement marking tape that loses reflectivity, becomes broken, dislodged or missing during the life of the Contract shall be replaced by the Contractor at no additional cost to the Authority.

627.06 Application

The following paragraphs are added:

For application of the tape, when the pavement temperature is below 50°F, heat shall be applied to the pavement surface, if deemed necessary by the factory representative or as directed by the Resident, at no additional cost to the Authority. Proper primer for the temperatures shall be used as directed by the manufacture.

The pavement mark tape shall be rolled over with a vehicle once application is complete and then scored every 20 feet when placed in long runs to prevent full length unraveling.

627.08 Removing Lines and Markings

The following sentence is added:

Removal of temporary pavement marking tape shall be accomplished without the use of heat, solvents, grinding or sandblasting and in such a manner that no damage to the pavement results.

627.09 Method of Measurement

The following paragraph is added:

Temporary Pavement Markings - Tape will be measured for payment by the linear foot. The measurement of broken lines will not include the gaps.

627.10 Basis of Payment

The following paragraphs are added:

Payment for the Temporary Pavement Markings - Tape will be made at the Contract bid price per linear foot, which price shall include furnishing, installing, maintaining and removing the temporary tape and all materials, labor, equipment and incidentals necessary to accomplish the work. Replacement of Temporary Pavement Markings - Tape, as described above, will be incidental and no separate payment will be made.

Payment will be made under:

Pay Item		Pay Unit
627.73	Temporary 6 Inch Pavement Marking Tape	Linear Foot

SPECIAL PROVISION

SECTION 627

PAVEMENT MARKINGS

(Temporary Pavement Markings – Black Tape)

627.01 Description

The following sentence is added:

This work shall also consist of furnishing, placing, maintaining and removing temporary black pavement marking tape at locations shown on the Plans to cover conflicting existing pavement markings or as directed by the Resident.

Temporary pavement marking black tape is scheduled for covering all conflicting existing pavement markings.

627.02 Materials

The following paragraph is added:

Temporary pavement marking tape shall be Stamark Removable Black Line Mask Tape Series 715 as manufactured by 3M of St. Paul, Minnesota.

627.04 General

The following paragraphs are added:

Work under this item shall be in accordance with the manufacturer's recommendations. A factory representative from 3M shall be present for the first application of all temporary pavement marking tape to insure proper application and product performance.

The pavement markings shall be applied mechanically to clean dry pavement as recommended by the manufacturer and approved by the Resident.

Temporary pavement markings shall consist of applying six inch solid black pavement marking tape for traffic maintenance during construction as shown on the Plans or as directed by the Resident. The tape shall be cut to the varying lengths necessary to cover the conflicting painted pavement marking.

Temporary pavement marking tape that becomes broken, dislodged or missing during the life of the Contract shall be replaced by the Contractor at no additional cost to the Authority.

627.06 Application

The following paragraphs are added:

For application of the tape, when the pavement temperature is below 50°F, heat shall be applied to the pavement surface, if deemed necessary by the factory representative or as directed by the Resident, at no additional cost to the Authority. Proper primer for the temperatures shall be used as directed by the manufacture.

The pavement mark tape shall be rolled over with a vehicle once application is complete and then scored every 20 feet to prevent full length unraveling.

627.08 Removing Lines and Markings

The following sentence is added:

Removal of temporary pavement marking tape shall be accomplished without the use of heat, solvents, grinding or sandblasting and in such a manner that no damage to the pavement results.

627.09 Method of Measurement

The following paragraph is added:

Temporary Pavement Markings - Tape will be measured for payment by the linear foot placed. The measurement of broken lines will not include the gaps.

627.10 Basis of Payment

The following paragraphs are added:

Payment for the Temporary Pavement Markings - Tape will be made at the Contract bid price per linear foot installed, which price shall include furnishing, installing, maintaining and removing the temporary tape and all materials, labor, equipment and incidentals necessary to accomplish the work. Replacement of Temporary Pavement Markings - Tape, as described above, will be incidental and no separate payment will be made.

Payment will be made under:

Pay Item		Pay Unit
627.731	Temporary 6 Inch Black Pavement Marking Tape	Linear Foot

SPECIAL PROVISION

SECTION 627

PAVEMENT MARKINGS

(Temporary Raised Pavement Markers)

627.01 Description

The following sentences are added:

This work shall consist of furnishing, placing and removing temporary raised pavement marking at locations as shown on the Plans or as approved by the Resident.

Temporary raised pavement markings may be used to delineate travel lanes after placement of pavement.

627.02 Materials

The second paragraph is deleted and replaced with the following:

The temporary raised pavement markers shall be white or yellow one way, or two way, markers (Type Tom W-1, Y-1, Y-2, Grade WZ) as distributed by Davidson Plastics Co. (DAPCO), Kent, WA, or an approved equal. Colors shall conform to MUTCD requirements.

627.04 General

The following sentence is added:

Temporary raised pavement marker that lose reflectivity, becomes broken, dislodged or missing during the life of the Contract shall be replaced by the Contractor at no additional cost to the Authority.

627.09 Method of Measurement

The following sentence is added:

Temporary Raised Pavement Markers will be measured by each unit, complete in place, maintained and accepted.

627.10 Basis of Payment

The following paragraphs are added:

The accepted quantity of Temporary Raised Pavement Markers will be paid for at the Contract price each. This price shall include all labor and materials to furnish, install, maintain, and remove the markers.

Payment will be made under:

Pay Item		Pay Unit
627.812	Temporary Raised Pavement Markers	Each

SPECIAL PROVISION

SECTION 631

EQUIPMENT RENTAL

631.02 General

The following sentences are added:

Jackhammer - To be included under category of air tool.

Bucket truck - Approved one man, able to reach 30 feet high bucket truck with 10 feet lateral extension.

Scissor Lift - Hydraulic scissors lift with a minimum capacity of three workers.

Electrician - Licensed by State of Maine.

Electrician's Apprentice - Enrolled in an accredited program.

631.08 Basis of Payment

The following paragraphs are added:

Such related costs such as use of hand tools, meal and room expenses, benefits, insurance, retirement, travel time, overtime, overhead and profit will not be measured separately for payment, but shall be incidental to the unit price for the bid item.

Note: For extra materials required for miscellaneous work the General Contractor shall be allowed 15 percent overhead and profit on the cost of materials and rental equipment (not covered by miscellaneous unit items). Rates for Subcontractor owned equipment required to perform miscellaneous work, not otherwise provided for in the Contract, shall be negotiated.

The General Contractor will be allowed 10 percent overhead and profit on the subcontractor's cost of materials, and subcontractors rented equipment (not covered by miscellaneous unit items). The General Contractor shall include his markup on the Subcontractor's labor in the pay items.

The labor hour bid items shall include labor and labor burdens, benefits, supervision, transportation, travel time and allowances, overnights, small tools and equipment, subcontractor overhead and profit, and General Contractor overhead and profit. Time will be measured from the start of work to the stoppage of work at the project site; less the time taken for lunch. No deduction of time will be taken for the standard morning "coffee break".

Payment will be made under:

Pay Item		Pay Unit
631.50	Jackhammer (air tool including operator)	Hour
631.51	Bucket truck	Hour
631.52	Scissor Lift	Hour
631.53	Electrician	Hour
631.54	Electrician's Apprentice	Hour
631.55	Plumber	Hour

SPECIAL PROVISION

SECTION 634

HIGHWAY LIGHTING

(Replacement LED Fixture)
(Remove and Reset Light Standard)
(Remove and Stack Light Standard)
(Conventional Light Standard with LED Fixture)

634.01 Description

The following paragraph is added:

This work shall consist of removing existing light standards, luminaires, and any breakaway devices and resetting with all associated appurtenances and wiring system on to new concrete foundations with new LED luminaires at locations as shown on the Plans. This work shall also include removing existing luminaires from light standards remaining in place and installing a new LED luminaires with all new associated appurtenances and wiring system at locations as shown on the Plans. This work shall also include transporting a supplied by the Authority replacement pole for the missing pole at station 10+75. This work shall also include installing new light standards with LED fixtures with all new associated appurtenances and wiring system at locations shown on the plans.

All removed existing luminaires shall be carefully transported and stacked at the MTA's Sign Shop at Mile 58 NB. All new highway lights will have photoelectric sensors for each individual light. All new light standards will be 35 feet tall with 2 foot riser and a 12 foot offset arm. All highway lights shall be installed so the LED fixture is centered over the shoulder lane line (right or left) for maintenance purposes.

634.021 Materials

The following paragraphs are added:

Underground junction boxes shall be precast concrete (Item 626.11). Provide manufacturer's listed cover for each junction box with logo stating "LIGHTING". All pull boxes are to be furnished as detailed on the Drawings.

Splices in junction boxes shall be made with ILSCO USPA-350-SS-DB Safetysub Watertight Direct Bury Splice Wire Range 350MCM-10-STR connectors for the appropriate wire count only. Splices in hand holes shall be Ideal SLK Disconnect Fuse Kit 30-S2212.

LED fixtures shall be one of the following:

- Model # ATB2-80BLEDE10-MVOLT-R3-PCSS, as manufactured from American Electric
- Model # VP-L/96NB-280/4K/T3/UNV/PCR-TL/SF2/GYS from Beacon Lighting
- Model # RVM-270W/60LED4K-LE3-UNIV-PH8-GY3 from Philips Lighting

634.04 Cable Installation

The reset light standards shall be wired with new wiring.

All existing light standards to receive new LED light fixtures shall also receive new wiring, including all splices and disconnects, from the new LED fixture back to and including in the junction box.

634.051 Removing Light Standards

The first paragraph is deleted and replaced with the following:

Before removing light standards, the luminaires shall be removed from the light standard and stacked.

The second paragraph is deleted and replaced with the following:

Care shall be exercised in removing, transporting and stacking the light standards and luminaires. The Contractor will be required to replace, at his own expense, all equipment damaged or destroyed by his operation.

The Contractor will not be allowed to remove the existing light standards until all new foundations, wiring, conduits and junction boxes have been installed. Breakaway devices shall be required on all light standards. If breakaway devices do not exist on the existing light standard, new breakaway devices shall be supplied and installed. The Contractor will be allowed one (1) working day to remove and reset the light standards, including replacing luminaires and testing. At a minimum, existing light levels at the plaza shall be maintained while relocated light standards are being installed and made fully operational.

634.06 Luminaires

In the second paragraph “12” is replaced with “10” and “THHN” replaced with “XHHW” to read:

“Number 10 wires AWG copper stranded XHHW...”.

634.092 Method of Measurement

The following sentence is added:

Replacement LED Fixture, Remove and Reset Light Standard, Remove and Stack Light Standard and Conventional Light Standard with LED Fixture will be measured by the single unit each, complete in place and accepted.

634.093 Basis of Payment

In the second sentence of the first paragraph, the words, “LED fixture, pole wiring” shall be added after the words, “bracket arm”.

The following paragraphs are added:

Payment for furnishing and installing Replacement LED Fixtures will be made for the accepted quantity at the Contract unit price each, which shall include removing the existing luminaire and delivering to the MTA, new LED fixture, ballast, lamp and incidentals necessary to complete the work.

The accepted quantity of Remove and Reset Light Standard will be paid at the Contract unit price each for the number of units that are removed and reset. Payment shall be full compensation for the removal and resetting of the light standard, removing and delivering removed luminaries to the MTA, transporting and installing the replacement light pole, resetting the breakaway device or installing a new breakaway device, new pole wiring to the new LED fixture and all incidentals necessary to complete the work.

Payment for Remove and Stack Light Standard will be made for the accepted quantity at the Contract unit price each, which shall include removing the light standard and transporting it to MTA’s Sign Shop at Mile 58 NB, as well as removing and disposing of all foundation as per plans and specifications.

Payment will be made under:

Pay Item		Pay Unit
634.175	Replacement LED Fixture	Each
634.208	Remove and Reset Light Standard	Each
634.209	Remove and Stack Light Standard	Each
634.231	Conventional Light Standard with LED Fixture	Each

SPECIAL PROVISION

SECTION 639

ENGINEERING FACILITIES

(Field Office, Type B)

639.04 Field Offices

This Subsection is amended by the addition of the following:

The Resident's Field Office shall be furnished and installed by the Contractor. The Contractor shall be responsible for furnishing and maintaining electricity, propane heat, and wireless internet service for the entire duration of the Contract, which includes periods of time which Work has been suspended. All of the costs associated with the above shall be the responsibility of the Contractor.

639.10 Method of Measurement

The following sentence is added:

Field office will be measured by the each.

639.11 Basis of Payment

The accepted quantity of field office will be paid at the Contract unit price each which will be full payment for providing electricity, propane heat, and wireless internet service. No additional markup will be allowed.

Payment will be made under:

Pay Item		Pay Unit
639.191	Field Office, Type B	Each

SPECIAL PROVISION

SECTION 643

TRAFFIC SIGNALS

(Lane Use Signal Installation)

643.01 Description

This work shall consist of supply and installation of replacement lane use signals (Non-Flashing). All equipment, installation of equipment and other incidental work shall conform to the latest applicable provisions of: NEC, MUTCD, NESC, NEMA, and the ITE Standards for traffic control equipment. All work shall be done to the satisfaction of the Resident. The meaning of specific terms shall be as defined in MUTCD, NESC, and the ITE Standards for traffic control equipment.

643.02 Materials

The replacement lane use signal heads shall be Trans-Tech DOT2424RG-175 or approved equal. See Appendix F for technical product details.

643.03 Installation

The replacement lane use signal housing and LED signal shall be installed in the same location as the existing lane use signal and the existing wiring shall be used. New Pelco (or equal) mounting brackets may be needed and will be incidental to the installation of the new lane use signal.

643.04 Method of Measurement

Replacement lane use signals will be measured by each unit, installed and accepted.

643.05 Basis of Payment

Replacement Lane Use Signals will be paid for at the Contract unit price each which payment shall be full compensation for the furnishing and installation of new lane use signals, and all other materials, labor, tools, equipment and incidentals necessary to complete the work.

Payment will be made under:

Pay Item		Pay Unit
643.711	Lane Use Signal Installations	Each

SPECIAL PROVISION

SECTION 643

TRAFFIC SIGNALS

(Traffic Signal Remove and Relocate)

643.01 Description

This work shall consist of removal and relocation of the traffic signal system (pedestrian signal) located at Interchange 36 toll plaza exit lanes. As part of the remove and relocate, the contractor shall temporarily install a signal head over the departure side of Entry Lane 3 for Phase 2 of the exit lane work. Also as part of the signal relocation the contractor shall replace the incandescent pedestrian signals with LED signals of the same type.

643.02 Materials

Contractor shall reuse all existing traffic signal equipment. The contractor shall provide a new foundation and anchor bolts, new concrete foundations shall conform to the requirements of Section 626 and shall be in conformance with the Maine Department of Transportation Standard Details. The contractor shall also provide all needed conduit, wiring and junction boxes need to relocate the signal.

643.03 Installation

All signal equipment installation shall conform to the latest applicable provisions of: NEC, MUTCD, NESC, NEMA, and the ITE Standards for traffic control equipment. All work shall be done to the satisfaction of the Resident. The meaning of specific terms shall be as defined in MUTCD, NESC, and the ITE Standards for traffic control equipment.

643.04 Method of Measurement

The traffic signal remove and install will be measured by lump sum, installed and accepted.

643.05 Basis of Payment

Traffic Signal Remove and Relocate will be paid for at the Contract unit price LS which payment shall be full compensation for the removal and relocation of the signal, and all other materials, labor, tools, equipment and incidentals necessary to complete the work. The foundation, conduit, wire and junction boxes shall be paid for per contract item.

Payment will be made under:

Pay Item		Pay Unit
643.712	Traffic Signal Remove and Relocate	LS

SPECIAL PROVISION

SECTION 645

HIGHWAY SIGNING

(Remove and Reset Sign)
(Remove and Stack Sign)

645.07 Demounting and Reinstalling Existing Signs and Poles

The following paragraphs are added:

At locations noted on the Plans, existing ground-mounted signs are designated to be removed and reset. This work shall consist of removing the sign panels, removing and resetting or disposing of the existing wood post and resetting the sign panels on a new wood post if required in the appropriate specified location. The Resident will determine if a new wood post is required.

At locations as shown on the Plans, existing ground-mounted signs are designated to be removed and stacked. This work shall consist of removing and delivering existing sign panels, posts, concrete foundations and breakaway devices to the MTA Sign Shop at Mile 58 NB. Excavations shall be backfilled and ground restored to the satisfaction of the Resident.

Any existing signs not shown on the Plans are to remain in their existing condition unless directed otherwise by the Resident.

645.08 Method of Measurement

The following sentences are added:

Removing and Resetting existing ground-mounted signs shall be measured as complete units each, removed, reset and accepted.

Removing and stacking existing signs shall be measured as complete units each removed and stacked.

645.09 Basis of Payment

The following paragraphs are added:

The accepted signs removed and stacked shall be paid for at the Contract unit price each as specified. Such price shall include removing and stacking sign panels and supports at the location specified.

The accepted signs Removed and Reset will be paid for at the Contract unit price each as specified. Such price will include removing and resetting sign panels, removing and resetting or disposing existing wood post and resetting the sign panels on the existing or new wood post and new hardware as required to complete the sign installation. Any signs or supports damaged by

the Contractor shall be replaced by him with new signs or supports conforming to the applicable Specifications at no additional cost to the Authority.

Payment will be made under:

Pay Item		Pay Unit
645.105	Remove and Stack Sign	Each
645.109	Remove and Reset Sign	Each

SPECIAL PROVISION

SECTION 645

HIGHWAY SIGNING

(Remove and Reset Plaza Sign No. 10)

645.01 Description

The following paragraphs are added:

This work shall consist of removing and resetting the existing highway guide signs (Plaza Sign No 10) as shown on the Plans. The work includes a combination of the following: removal, transporting replacement sign, resetting, modifying, furnishing, and disposal of concrete foundations, steel posts, and breakaway devices. The existing sign shall be replaced with a similar sign provided by the MTA, the contractor shall transport the replacement sign from the MTA Cumberland Maintenance facility to Interchange 32 for resetting the sign as part of the work.

The signs shall remain visible to turnpike drivers at all times unless other provisions have been approved.

645.02 General

The following sentences are added:

New concrete foundations shall conform to the requirements of Section 626 and shall be in conformance with the Maine Department of Transportation Standard Details.

Breakaway devices shall be B525 or B650 as manufactured by Transpo Industries, Inc. (www.transpo.com).

645.05 Signs

The following paragraphs are added:

The removal and resetting of the Plaza Sign #10 shall be completed in accordance with the details as shown on the Plans. The Contractor shall keep all signs visible to turnpike drivers except for the period of time necessary to actually complete the relocation. The sign panel shall not be removed until after the proposed replacement sign has been installed in the final location.

The Contractor shall to utilize all new materials for resetting the sign. The cutting of structural steel post shall be accomplished by mechanical means. The use of burning to cut shall not be allowed. One single connection will be allowed to extend a post to the required length. A full penetration weld or a bolted splice shall be required for the connection. The Contractor shall submit his proposed connection method to the Resident for approval. Any damaged area shall be

repaired with two coats of zinc-rich chromium paint. Material removed from an existing sign location and not reused at a proposed sign location shall become the property of the Contractor.

All signs posts on breakaway foundations shall be installed in accordance with the Specifications for breakaway devices. Multipost signs shall be constructed with the required splice as in accordance with the Plans.

645.08 Method of Measurement

The following sentence is added:

Remove and Reset Plaza Sign No. 10 shall be measured for payment as one lump sum for each sign number as shown on the Plans.

645.09 Basis of Payment

The payment for Remove and Reset Plaza Sign No. 10 shall be at the Contract lump sum price for each sign number. This payment shall be full compensation for furnishing all new materials, removing, modifying resetting existing material and signs, and all labor and equipment necessary to complete the installation in accordance with the details as shown on the Plans. This may include furnishing and installing new materials such as structural steel, concrete foundations, and single and multipole breakaway devices. Compensation for the excavation and backfill for the concrete foundation, as well as removal of the concrete foundation, shall be included in this item.

Payment will be made under:

Pay Item		Pay Unit
645.501	Remove and Reset Plaza Sign No. 10	Lump Sum

SPECIAL PROVISION

SECTION 652

MAINTENANCE OF TRAFFIC

(General)

652.2 Materials

The first sentence in the second paragraph is replaced with the following:

Super high intensity fluorescent retroreflective sheeting, ASTM 4956 – Type VII, Type VIII or Type IX (Prismatic), is required for all construction signs.

652.2.3 Flashing Arrow Board

Delete the existing 5 paragraphs and replace with the following: Flashing Arrow Panels (FAP) must be of a type that has been submitted to AASHTO's National Transportation Product Evaluation Program (NTPEP) for evaluation and placed on the Maine Department of Transportations' Approved Products List of Portable Changeable Message Signs & Flashing Arrow Panels.

FAP units shall meet requirements of the current Manual on Uniform Traffic Control Devices (MUTCD) for Type "C" panels as described in Section 6F.56 - Temporary Traffic Control Devices. An FAP shall have matrix of a minimum of 15 low-glare, sealed beam, Par 46 elements capable of either flashing or sequential displays as well as the various operating modes as described in the MUTCD, Chapter 6-F. If an FAP consisting of a bulb matrix is used, each element should be recess-mounted or equipped with an upper hood of not less than 180 degrees. The color presented by the elements shall be yellow.

FAP elements shall be capable of at least a 50 percent dimming from full brilliance. Full brilliance should be used for daytime operation and the dimmed mode shall be used for nighttime operation. FAP shall be at least 2.4 M x 1.2 M [96 inch x 48 inch] and finished in non-reflective black. The FAP shall be interpretable for a distance not less than 1.6 km [1 mile].

Operating modes shall include, flashing arrow, sequential arrow, sequential chevron, flashing double arrow, and flashing caution. In the three arrow signals, the second light from the arrow point shall not operate.

The minimum element on-time shall be 50 percent for the flashing mode, with equal intervals of 25 percent for each sequential phase. The flashing rate shall be not less than 25 or more than 40 flashes per minute. All on-board circuitry shall be solid state.

Primary power source shall be 12 volt solar with a battery back-up to provide continuous operation when failure of the primary power source occurs, up to 30 days with fully charged batteries. Batteries must be capable of being charged from an onboard 110 volt AC power source and the unit shall be equipped with a cable for this purpose.

Controller and battery compartments shall be enclosed in lockable, weather-tight boxes. The FAP shall be mounted on a pneumatic-tired trailer or other suitable support for hauling to various locations, as directed. The minimum mounting height of an arrow panel should be 2.1 M [7 feet] from the roadway to the bottom of the panel.

The face of the trailer shall be delineated on a permanent basis by affixing retro-reflective material, known as conspicuity material, in a continuous line as seen by oncoming drivers.

A portable changeable message sign may be used to simulate an arrow panel display."

652.2.4 Other Devices

The eighth paragraph is deleted and replaced with Special Provision Section 652, Maintenance of Traffic (Portable Changeable Message Sign).

652.2.5 Safety Vests

This Subsection is amended by the addition of the following:

All jobsite personnel shall wear a safety vest labeled as ANSI 107-2004 standard performance for Class 3 risk exposures. This requirement also applies to truck drivers and equipment operators when out of an enclosed cab.

652.2.6 Signs

The use of temporary plaques to cover text or to change text will not be allowed. All signs shall have a uniform face.

652.4 Flaggers

Replace the first paragraph with the following; "The Contractor shall furnish flaggers as required by the TCP or as otherwise specified by the Resident. All flaggers must have successfully completed a flagger test approved by the MaineDOT and administered by a MaineDOT-approved Flagger-Certifier who is employing that flagger. All flaggers must carry an official certification card with them while flagging that has been issued by their employer. Flaggers shall wear safety apparel meeting ANSI 107-2004 Class 3 risk exposure that clearly identifies the wearer as a person, and is visible at a minimum distance of 300 m [1000 ft], and shall wear a hardhat with 360° retro-reflectivity. Retro-reflective or flashing SLOW/STOP paddles shall be used, and the flagger station shall be illuminated to assure visibility in accordance with 652.6.2."

Second paragraph, first sentence; change "…have sufficient distance to stop before entering the workspace." to "…have sufficient distance to stop at the intended stopping point." Third sentence; change "At a spot obstruction…" to "At a spot obstruction with adequate sight distance,…".

Fourth paragraph, delete and replace with "Flaggers shall be provided as a minimum, a 10 minute break, every two-hours and a 30-minute or longer lunch period away from the work station. Flaggers may only receive one unpaid break per day; all other breaks must be paid.

Sufficient certified flaggers shall be available onsite to provide for continuous flagging operations during break periods. If the flaggers are receiving the appropriate breaks, breaker flagger(s) shall be paid starting two-hours after the work begins and ending two-hours before the work ends. A maximum of one breaker per six flaggers will be paid (one breaker flagger for two to six flaggers, two breaker flaggers for seven to 12 flaggers, etc)".

652.63 Traffic Coordinator

The Contractor shall submit to the Resident for approval a list of traffic control personnel assigned to the Project including qualifications, certifications and experience.

The Traffic Coordinator duties shall include, but are not necessarily limited to:

a. Developing, in conjunction with the Resident and Project superintendent, a traffic control program for the days' work activities which will facilitate traffic in a safe and efficient manner;

b. Insure that all traffic control implements (signs, arrow boards, barrels, etc.) are on-site so the traffic program can be implemented effectively;

c. Insure a safe and effective setup or take-down of all signing implements to least impact the traveling motorist; and,

d. Working knowledge of construction signing/traffic control requirements in conformance with the latest issued Manual on Uniform Traffic Control Devices.

SPECIAL PROVISION

SECTION 652

MAINTENANCE OF TRAFFIC

(Specific Project Maintenance of Traffic Requirements)

This Specification describes the specific project maintenance of traffic requirements for this Project.

The following minimum traffic requirements shall be maintained:

Temporary Toll Plaza Lane Closures

Interchange 32: Three toll plaza lanes shall remain open at all times from 05:00 a.m. to 08:00 p.m. unless approved.

Interchange 36: Three toll plaza lanes shall remain open at all times from 05:00 a.m. to 08:00 p.m. unless approved.

Interchange 46: Two toll plaza lanes shall remain open at all times from 05:00 a.m. to 08:00 p.m. unless approved.

Interchange 47: Two toll plaza lanes shall remain open at all times from 05:00 a.m. to 08:00 p.m. unless approved.

Temporary toll plaza lane closures may be required for lanes not designated for long term closure on the Maintenance of Traffic Control Plans. The following minimum requirements shall be maintained:

Plaza lanes shall remain available for opening at all times except when the Contractor is performing work in or near toll lanes such that appropriate access to the lane entry or departure is constrained by Contractor activities, or adjacent to or directly over the plaza lanes. A plaza lane closure is required when danger to the traveling public, other Authority contractors or Authority employees may exist. The potential of any material falling onto the roadway shall be considered a potential danger. This shall include, but not necessarily be limited to, demolition debris, water, tools, equipment and material.

A plaza lane closure will be required whenever men or equipment will be present in a plaza lane or when regular vehicular access into or out of a toll lane is impeded by the Contractor. The Authority may also require adjacent lanes to be closed to protect the traveling public or Authority employees. Temporary plaza lane closures are allowed from 08:00 p.m. to 05:00 a.m.. These hours may be adjusted by the Resident based on the daily traffic volumes. Plaza lane closures not completely removed by the time specified will be subject to a rental fee of $500.00 per 10 minutes for every 10 minute increment beyond the specified ending time for each lane. Temporary plaza lane closures will not be allowed during periods of inclement weather as determined by the Authority and will not be allowed on Saturday, Sundays, and

Holidays. The Authority reserves the right to order removal of approved temporary plaza lane closures.

Requests for temporary traffic lane closures shall be submitted to the Resident for approval. The Resident is required to receive approval from the Maine Turnpike Authority's Plaza Supervisor for all plaza lane closures. The request shall be submitted to the Plaza Supervisor by the Resident at least one working week prior to the day of the requested plaza lane closure. All requests must be received by 12:00 p.m. noon to be considered as received on that day. Requests received after 12:00 p.m. shall be considered as received the following day. The Contractor shall plan the work accordingly.

Wide load lanes may be closed when wide loads are not permitted on the Turnpike by the Authority. The temporary wide load lane closures must be scheduled one week in advance, and occur outside of the various Holiday restrictions.

Maine Turnpike Traffic Control Requirements

Work activities within established work zones are allowed 24-hours a day, with the exception of sheet pile driving, erection or removal of structural steel and equipment moves.

All stoppages, equipment moves, lane closures and shoulder closures are subject to Subsection 101.2, Definition, and holiday periods.

Temporary toll lane closures shall be removed if construction is not ongoing. Unattended lane closures are not allowed unless included in the Contract language or approved by the Resident as a long-term traffic control operation.

652.7 Method of Measurement

The following paragraph is added:

Traffic control devices required to complete the work will be measured for payment under their respective pay items. Installation, maintenance, and removal of traffic setups and the Contractor's dedicated traffic coordinator will not be measured separately for payment, but shall be incidental to Item 652.361, Maintenance of Traffic Control Devices.

SPECIAL PROVISION

SECTION 652

MAINTENANCE OF TRAFFIC

(Temporary Toll Plaza Lane Closures)

The following minimum requirements shall be maintained:

Plaza lanes shall remain available for opening at all times except when the Contractor is performing work in, adjacent to or directly over the plaza lanes. A plaza lane closure is required when danger to the traveling public or turnpike employees may exist. The potential of any material falling onto the roadway shall be considered a potential danger. This shall include, but not necessarily be limited to, demolition debris, water, tools, equipment and material.

A plaza lane closure will be required whenever men or equipment will be present in a plaza lane. The Authority may also require adjacent lanes to be closed to protect the traveling public or turnpike employees.

Requests for temporary toll plaza lane closures shall be submitted to the Resident for approval. The Resident is required to receive approval from the Maine Turnpike Authority's Plaza Supervisor for all plaza lane closures. The request shall be submitted to the Plaza Supervisor by the Resident at least five (5) working days prior to the day of the requested plaza lane closure.

Requests for the closure for the entering wide load lanes shall be submitted at a minimum 14 days in advance.

Some activities, which require plaza lane closures, will be considered favorably for night work. The Contractor shall submit a request in writing to the Resident. The approval of the request will be at the Resident's discretion and will not be unreasonably withheld.

Traffic Control and Plaza Safety

The following are the minimum Plaza Lane closure requirements for completing the work. The limits have been set to protect Turnpike patrons and Toll Attendants from potential harm during the prosecution of the work.

The Contractor shall furnish, erect, maintain and relocate 10 inch by 14 inch (minimum dimensions) DANGER – Unauthorized Persons Keep Out, or DANGER – DO NOT ENTER signs, meeting OSHA specifications for size, color and legend, for installation on toll booths or drums, as directed by the Resident. The purchase, erection, maintenance, and relocation of the hazard signs and hazard safety tape shall be incidental to the mobilization pay item. Providing, maintaining and relocating the specified plywood safety walkways at all locations shall also be incidental to the mobilization pay item.

Maintenance of Traffic signing shall be in place during plaza work at all times.

652.7 Method of Measurement

The following paragraph is added:

Traffic control devices required to complete the work will be measured for payment under their respective pay items. Installation, maintenance, and removal of traffic setups and the Contractor's dedicated traffic employee will not be measured separately for payment, but shall be incidental to Item 652.361, Maintenance of Traffic Control Devices.

SPECIAL PROVISION

SECTION 652

MAINTENANCE OF TRAFFIC

(Work Requiring Complete Stoppages of Traffic)

This Section outlines the minimum requirements that shall be maintained for working on, over, or adjacent to the Maine Turnpike roadway.

Work Requiring Complete Stoppages of Traffic

Complete stoppages of traffic will only be allowed outlined in Special Provision Section 652, Specific Project Maintenance of Traffic Requirements, or as approved by the Resident.

The following is a partial list of activities requiring complete stoppages of traffic. Complete stoppages of traffic may be required for other activities as well:

- Moving of heavy or slow equipment across or on the travel lanes
- Canopy removal and installation

State Police will be used to stop traffic. Cost for State Police will be the responsibility of the Authority. The times requested for trooper assisted equipment moves by on-duty troopers cannot be guaranteed. The MTA will not be held responsible for any delays or costs associated with the delay, postponement or cancellation of an on-duty trooper assisted equipment move.

Contractor shall be responsible for the installation of Signs CS-63, "Expect Stopped Traffic" and Signs W3-4 "Be Prepared to Stop", in accordance with plans and specifications or as directed by the Resident immediately prior to the traffic stoppage. These signs shall be covered when not applicable.

Equipment Moves

The maximum time for which traffic may be stopped and held for an equipment move at any single time shall be five (5) minutes. The duration shall be measured as the time between the time the last car passes the Resident until the time the Resident determines that all travel lanes are clear. The traffic shall only be stopped for the minimum period of time required to complete the approved activity. The Contractor shall reimburse the Authority at a rate of $500 per minute for each minute in excess of the five-minute allowance.

Unapproved movement of heavy equipment across the plaza shall be considered a violation of the Maintenance of Traffic Requirements and is subject to the fines of $500 per minute or portion thereof.

Request for Complete Stoppage of Traffic

A request for a complete stoppage of traffic must be submitted to the Resident for approval. The Resident is required to receive approval from the Maine Turnpike Authority for all stoppages. The request shall be submitted to the Authority by the Resident at least five (5) working days prior to the day of the requested stoppage of traffic and two (2) days for a stoppage less than five minutes. All requests must be received by 12:00 p.m. noon to be considered as received on that day. Requests received after 12:00 p.m. shall be considered as received the following day. The Contractor shall plan the work accordingly.

SPECIAL PROVISION

SECTION 652

MAINTENANCE OF TRAFFIC

(Temporary Flexible Delineator)

652.1 Description

The following sentence is added:

This work shall consist of furnishing and installing flexible reflectorized delineators in accordance with the Manufacturer's recommendations in reasonably close conformity with the plans and specifications.

652.2 Materials

The following paragraph is added:

Flexible reflectorized delineators shall be tubular markers and shall be 42 inches high orange tubes with four alternating 6 inch wide retro-reflective orange and white bands (2 white and 2 orange) starting with an orange band at the top. Adhesive pads used to secure tubular markers on pavement that is not going to be overlaid shall not require heating of the pavement.

652.2.4 Other Devices

The following sentence is added:

Flexible delineators shall be installed in accordance with manufacturer's specifications and Special Provision 652.

652.7 Method of Measurement

The following sentence is added:

Flexible reflectorized delineators will be measured by each unit, complete in place and accepted.

652.8 Basis of Payment

The following paragraphs are added:

The accepted quantity of Flexible Reflectorized Delineators will be paid for at the contract unit price per each. Payment will be full compensation for all materials, labor, equipment, and incidentals necessary to furnish, install and maintain the flexible delineator and all associated hardware, complete in place. Payment will also include full compensation for the

removal of the delineators, bases and base adhesives to the Resident's satisfaction when the construction activity is complete.

Payment will be made under:

Pay Item		Pay Unit
652.341	Temporary Flexible Delineator	Each

SPECIAL PROVISION

SECTION 652

MAINTENANCE OF TRAFFIC

(Portable-Changeable Message Sign)

652.2.4 Other Devices

The eighth paragraph is deleted and replaced with the following:

Portable-Changeable Message Signs (PCMS) will be furnished by the Contractor and shall be Ver-Mac PCMS-1210 or an approved equal. PCMS's shall be located and relocated to locations approved by the Resident within the Project limits for the duration of the Project.

Features to the Ver-Mac PCMS shall include:

- An all LED display.
- Be legible from a distance of 1,000 feet.
- Have three (3) lines available for messages.
- Be NTCIP compliant (NTCIP 1203).
- Be capable of being programmed by a remote computer via a data (IP over Cell) cellular modem connection.
- Have GPS location capability, by GPS modem or by adding on a GPS device capable of providing GPS location remotely to the MTA Communications' Center.
- Be programmable by Vanguard Software by Daktronics.

The Contractor shall complete and/or provide the following:

- Submit a catalog cut shop drawing to the Resident of all proposed equipment for review and approval.
- Establish and pay for a data cellular account so that PCMS may be remotely programmed and operated from the Authority's Communications' Center.
- Provide to the Authority technical support from the PCMS manufacturer that may be necessary to integrate the PCMS into the MTA software platform (Vanguard Software by Daktronics).
- Provide the manufacturer's software necessary to change the PCMS messages remotely from the Authority's Communications' Center and the Resident's computer if necessary or requested.
- Provide training on the operation of the PCMS to the Resident and the Authority's Communications' Center representative.
- Make all PCMS on the Project work site available to the Authority for any/all emergency situations as defined by the Authority. This shall include the preemption of any messages running at the time of need as approved by the Authority and the Resident.

The Contractor shall also:

- Furnish, operate, relocate and maintain the PCMS as approved by the Resident.
- Be responsible for the day to day programming and operation of the PCMS for Project purposes.

The PCMS(s) shall be on-site, with data cellular account established, GPS location capable, and all training required complete within one month after mobilization or seven days prior to implementing traffic shifts, detours or stoppages, whichever is sooner. Implementation of traffic shifts, detours, or stoppages of traffic will not be allowed without PCMS boards on-site with the specified Authority's Communications' Center Software Platform integration and training.

652.7 Method of Measurement

The following sentence is added:

Portable-Changeable Message Sign(s) will be measured for payment by each unit furnished, installed and maintained.

652.8 Basis of Payment

The following paragraphs are added:

The accepted quantity of PCMS will be paid for at the Contract unit price each. This price shall be full compensation for furnishing, relocating, maintaining and removing the PCMS. The price also includes all costs associated with setting-up and paying for a data cellular account, technical support, training and any costs associated with the GPS location device.

Progress payment of each PCMS shall be pro-rated over the duration of the Contract. Contract duration shall be from the specified Contract start date to substantial completion or Contract completion, whichever is sooner.

For a PCMS that fails to operate when required, the Contractor will be given 24-hours to repair or replace the PCMS. For periods longer than 24-hours, payment will be reduced based on the pro-rated time that the PCMS is out of service.

Payment will be made under:

Pay Item		Pay Unit
652.41	Portable-Changeable Message Sign	Each

SPECIAL PROVISION

SECTION 655

ELECTRICAL WORK

655.01 Description

All work shall be governed by the Standard Specifications except for that work which applies to those sections of the Standard Specifications which are amended by the following modifications, additions and deletions.

Specifically, for the electrical work (in addition to standards specified in individual work sections), the following standards are imposed, as applicable to the work in each instance:

- NEC, National Electrical Code (NFPA No. 70)
- NFPA No. 101, Life Safety Code
- ANSI C 2, National Electrical Safety Code
- ANSI C 73, Dimensions of Attachment Plugs and Receptacles
- NECA standards for installation
- NEMA standards for materials and products
- UL, Underwriters Laboratories

The Contractor will warranty the material supplied by them and their workmanship for a minimum of one (1) year.

655.02 General Provisions

RELATED DOCUMENTS

General provisions of this Contract, including General Provisions and Special Provisions, apply to work of this section.

SUMMARY

This Section specifies several categories of provisions for electrical work, including:

1. Certain adaptive expansions of requirements specified in the Special Provisions.
2. General performance requirements within the electrical systems as a whole.
3. General work to be performed as electrical work, because of its close association.

SUMMARY OF ELECTRICAL WORK

General Outline: The facilities and systems of the electrical work can be described (but not by way of limitation) as follows:

1. Installation of electrical control and power distribution systems, including the electrical connections to new equipment.

2. Installation of toll revenue collection systems hardware.

3. Installation of temporary and interim provisions.

Permits and Fees: This work shall include the procurement of and payment for any and all permits and fees required for the performance of the electrical work including those that may be required from local utilities for services.

COORDINATION OF ELECTRICAL WORK

Refer to Part II, Special Provisions for general coordination requirements applicable to the entire work. It is recognized that the Contract documents are often diagrammatic in showing certain physical relationships, which shall be established within the electrical work, and in its interface with other work including utilities and mechanical work, and that such establishment is the exclusive responsibility of the Contractor.

Arrange electrical work in a neat, well organized manner with conduit and similar services running parallel with primary lines of the building construction, and with a minimum of 7'0" overhead clearance where physical limitations permit.

Locate operating and control equipment properly and in accordance with the NEC, to provide easy access, and arrange entire electrical work with adequate access for operation and maintenance.

Coordination of Options and Substitutions: Where the Contract documents permit the selection from several product options, and where it becomes necessary to authorize a substitution, the Contractor shall not proceed with purchases until coordination of all interface requirements has been checked and satisfactorily established. Substitutions are subject to approval by the Authority or designated representative per the requirements of the Contract documents.

SUBMITTALS FOR ELECTRICAL WORK

For electrical work, submittals are required for each category of items listed below.

- Shop Drawings, Product Data, Certifications, Test Reports, Warranties, Guarantees, Installation Drawings, and Work Checklist in Appendix E.
- Installation Drawings shall be modified and submitted to reflect any changes during installation of electrical equipment.

The Contractor, prior to forwarding shop drawings and product data to the Resident, shall check all conditions, make all corrections and sign and date each set. No shop drawings will be

reviewed by the Resident without the signature of the Contractor, which shall signify that he has checked the submittals.

PRODUCTS, ELECTRICAL WORK

Refer to Divisions 600 and 700 of the Standard Specifications for general requirements on products, materials and equipment. The following provisions expand or modify the requirements as applicable to electrical work:

Compatibility: Provide products, which are compatible with other products of the electrical work and with other work requiring interface with the electrical work, including electrical connections and control devices. For exposed electrical work, coordinate colors and finishes with other work.

FLOOR AND WALL PENETRATIONS

Where electrical materials penetrate walls or floors that are a part of a fire separation or assembly, the opening shall be effectively sealed to maintain separation integrity. Openings shall be closed using General Electric RTV850 Silicone RTV Foam, or approved equal to form a fire rated, water-tight seal, and installation with automatic mixing only. The penetration seal materials shall pass ASTM E 814 (UL 1479) Standard Method of Fire Tests for Through Penetration Fire Stops up to the required fire resistance.

Where conduits penetrate a wall, floor or ceiling that is part of a weatherproof barrier, a non shrink weatherproof type grout and or Sika 1A caulking shall be used, in accordance with manufacturer's installation instructions.

All work, materials, labor to fireproof or waterproof conduit penetrations shall be incidental to the various pay items

EXCAVATING FOR ELECTRICAL WORK

The work of this article is defined to include whatever excavating and back-filling is necessary to install the electrical work. Coordinate the work with other excavating and back-filling in the same area, including de-watering; flood protection provisions, and other temporary facilities. Coordinate the work with other work in the same area, including other underground services (existing and new), paving, and concrete work. Coordinate with weather conditions and provide temporary facilities needed for protection and proper performance of installations, excavating and back-filling.

General Standards: Except as otherwise required, comply with the applicable provisions of Divisions 600 and 700 of the Standard Specifications for information related to electrical-work excavating and back-filling. Refer instances of uncertain applicability to the Resident for resolution before proceeding.

ELECTRICAL WORK CLOSEOUT

Construction Equipment: After completion of performance testing and the Authority's performance testing, remove Contractor's tools, test facilities, construction equipment and similar devices and materials used in execution of the work but not incorporated in the work.

ELECTRICAL SYSTEM TEST

The Contractor shall submit certification of the adequacy of each power and/or communications circuit for the following sub-systems, where applicable:

- Lane Controller (LC) System
- Automatic Vehicle Identification (AVI) Readers
- Automatic Vehicle Identification (AVI) Antennas
- Digital Video Audit System (DVAS)
- Traffic Control Pedestal (TCP)
- Vehicle Capture and Recognition System (VCARS)
- Canopy Override Switch (COS)
- Manual Lane Terminal (MLT)
- Receipt Printer (RP)

Verification of the electrical system should be done by turning on/off assigned circuit breakers prior to attachment of equipment to validate panel schedule and that proper voltage is present at termination.

COMMUNICATIONS SYSTEMS

Provide outlets, wireways, device plates, etc., in conformance with the applicable sections of this specification, as may be required.

Wireways shall be in accordance with "Wireways" part of the Technical Specifications and NEC and the following special conditions:

- Minimum size shall be 1 inch unless otherwise noted.

- No more than two standard factory 90-degree bends per 100 feet or three 90 degree 24 inch radius bends and as to adhere to minimum manufacturers bend radius's on data cables.

655.03 Electrical Wireways

RELATED DOCUMENTS

General provisions of the Contract, including General Provisions and Special provisions, apply to work of this section.

SUMMARY

The requirements of this section apply to electrical wireway work specified elsewhere in these Specifications.

The types of electrical wireways required for the project may include the following:

- Electrical metallic tubing.
- Intermediate metal conduit.
- Liquid tight metallic flexible conduit.
- Galvanized rigid metal conduit.
- Nonmetallic conduit. (PVC)
- Surface metal wireways.

QUALITY ASSURANCE

Manufacturers: Firms regularly engaged in manufacture of electrical wireways of types and capacities required, whose products have been in satisfactory use in similar service for not less than three years.

Contractor: A firm with at least three years of successful installation experience on projects with electrical wiring installation work similar to that required for the project. Under this definition, Contractor can also be a subcontractor to the General Contractor for the Project.

NEMA Compliance: Comply with applicable portions of National Electrical Manufacturers Association standards pertaining to nonmetallic duct and fittings for underground installation.

UL Labels: Provide electrical wireways, which have been listed and labeled by Underwriters Laboratories.

NEC Compliance: Comply with National Electrical Code (NFPA No. 70) as applicable to construction and installation of electrical wireways.

PRODUCT DELIVERY, STORAGE AND HANDLING

Provide color-coded end-cap thread protectors on exposed threads of threaded metal conduit. Handle conduit and tubing carefully to prevent bending and end-damage and to avoid scoring finish. Store pipe and tubing inside and protect from weather. When necessary to store outdoors, elevate well above grade and enclose with durable, watertight wrapping.

MATERIALS AND COMPONENTS

For each electrical wireway system required, provide a complete assembly of conduit or tubing with fittings including, but not necessarily limited to, connectors, nipples, couplings, elbows, expansion fittings, supports, and other components and accessories as needed to form a complete system of type required.

Metal Conduit, Tubing and Fittings: Provide metal conduit, tubing and fittings of type, grade, size and weight (wall thickness) required for each service. Where type and grade are not indicated, provide proper selection determined to fulfill wiring requirements, and comply with National Electrical Code for electrical wireways.

Rigid Steel Conduit: FS WW-C-581 and ANSI C80.1.

Intermediate Steel Conduit: FS WW-C-581 and ANSI C80.1.

EMT- Electrical Metallic Tubing: FS WW-C-563A, ANSI C80.3 and UL 797. Installation shall comply with NEC Article 348. Provide high quality, hot dip galvanized, electrical metallic tubing conduit and fittings of type, size and weight (wall thickness) required for each application. EMT shall only be used in enclosed areas that are not subject to possible collision or interference. Where type and grade are not indicated, provide proper selection determined to fulfill wiring requirements, and comply with National Electrical Code. Rain-tight compression type connectors shall be used in all cases. Set-screw type conduit connections or fittings shall not be used.

Galvanized Rigid Metal Conduit Fittings: FS W-F-408, Type and Classes as required.

Liquid-tight Flexible Metal Conduit: Provide liquid-tight flexible metal conduit comprised of single strip, continuous, flexible interlocked, double-wrapped steel, galvanized inside and outside; forming smooth internal wiring channel; with liquid-tight jacket of flexible polyvinyl chloride (PVC).

Liquid-tight Flexible Metal Conduit Fittings: FS W-F-406, Type as required.

Nonmetallic Conduit and Fittings (PVC): Provide nonmetallic conduit and fittings of type, size and weight (wall thickness) required for each service. Where type and grade are not indicated, provide proper selection determined to fulfill wiring requirements, and comply with National Electrical Code for electrical wireways, and with type selected in accordance with applicable standards.

Surface Mounted Metallic Wireways: Provide wireways for surface mounting as required. Wireways shall be of rectangular cross section of size as required by the National Electrical Code (NFPA No. 70) for conductor fill. Wireways shall be of a design to accommodate wiring devices required. Finish shall be galvanized.

Conduit and Tubing and Wireway Accessories: Provide conduit, tubing and wireway accessories including straps, hangers, angles expansion and deflection fittings as recommended by conduit, tubing and wireway manufacturers.

Mounting strut materials and hardware: Provide corrosion-resistant hot-dip galvanized strut members and stainless steel hardware for all equipment and cabinet mounting applications.

INSTALLATION

Install conduit and tubing products as required, in accordance with manufacturer's written instructions, applicable requirements of NEC and National Electrical Contractors Association's

"Standard of Installation", and in accordance with recognized industry practices to ensure that products serve intended function.

Complete the installation of electrical wireways before starting installation of cables within wireways.

Where conduit is installed in earth, it shall be Polyvinyl Chloride (PVC) conduit as specified in the Plans.

PVC conduit shall be used in concrete slabs on grade and where noted in the Plans. Metallic conduit is not permitted in the concrete slabs or in substitution of any PVC conduit locations specified on the Plans without specific authorization by the Authority.

Wherever possible, install horizontal wireway runs above water and steam piping.

Install surface metal wireways and accessories as required on elevations. Carefully coordinate with interior finishes and furnishings.

At any point where a conduit crosses an expansion joint, or where movement between adjacent sections of conduit can be expected, bronze or alloy expansion fittings shall be installed equal to Type AX as made by the O.Z. Electrical Manufacturing Co., Inc., or equivalent by Hope or Spring City unless such locations are within conduit specified as non-metallic. Such locations shall be handled with a non-metallic equivalent or as specified in Plans.

655.04 Wires and Connectors

RELATED DOCUMENTS

The general provisions of the Contract, including General Provisions and Special Provisions, apply to the work specified in this section.

SUMMARY

The requirements of this section apply to the wire work specified elsewhere in these Specifications.

The applications for wire and connectors required on the project may include the following:

- Power distribution circuitry.
- Lighting circuitry.
- Appliance and equipment circuitry.

QUALITY ASSURANCE

Manufacturers: Firms regularly engaged in the manufacture of electrical products of the types and ratings required, whose products have been in satisfactory use in similar service for not less than 3 years.

Contractor: A firm with at least three years of successful installation experience on projects with electrical wiring installation work similar to that required for the project. Under this definition, Contractor can also be a subcontractor to the General Contractor for the Project.

NEC Compliance: Comply with National Electrical Code (NFPA 70) as applicable to construction and installation of electrical cable, wire and connectors.

UL Labels: Provide electrical cable, wire and connectors, which have been listed and labeled by Underwriters Laboratories.

NEMA/ICEA Compliance: Comply with National Electrical Manufacturers Association/Insulated Power Cable Authorities Association Standards publications pertaining to materials, construction and testing wire cable, where applicable.

PRODUCT DELIVERY, STORAGE AND HANDLING

Provide factory-wrapped water-proof flexible barrier material for covering wire and cable on wood reels, where applicable; and weather resistant fiberboard containers for factory-packaging of cable, wire and connectors, to protect against physical damage in transit. Do not install damaged cable, wire or connectors; remove from project site.

Store wire and connectors in factory-installed coverings in a clean, dry indoor space which provides protection against the weather.

MANUFACTURERS

Provide products produced by one of the following or approved equal (for each type of cable, wire and connectors):

Cable and Wire:

- Anaconda Wire and Cable Co.
- Belden Corp.
- General Cable Corp.
- Phelps Dodge Cable and Wire Co.
- Wire and Cable Dept., General Electric Co.
- Rome Cable Corp.

Connectors:

- AMP Inc.
- Burndy Corp.
- Minnesota Mining and Mfg. Co.

- OZ/Gedney Co.
- Thomas & Betts Co.

WIRE AND CONNECTORS

Except as otherwise required, provide wire and connectors of manufacturer's standard materials, as required by published product information; designed and constructed as recommended by the manufacturer, and as required for the installation.

Wire:

Provide factory-fabricated wire of the size, rating, material and type as required for each service. Where not indicated, provide proper selection as determined by Installer to comply with installation requirements and with NEC standards. Select from only the following types, materials, conductor configurations, insulations, and coverings for 120/240 Volt circuits:

UL Type: THW. (Sizes #6 AWG wire and larger)

UL Type: THHW. (Sizes up to #4 AWG wire)

UL Type: USE. (Underground installation)

Material: Copper.

Conductors: (AWG wire 20 to AWG wire 16).

> Note: All low voltage signal conductors (including CAT5e and CAT6 data cables) shall be stranded. Conductors for underground, below grade, or in conduit to lane devices shall be OSP grade, gel filled. Interior building communications cables may be plenum rated for interior wall or cable tray applications.

Concentric-lay-stranded (standard flexibility) (AWG wire 14 and larger).

Interconnection for data communication shall be performed with cables that shall be submitted for approval. The general cable types are designated on the Plans/ Specifications. Minimum bend radius should meet the requirements of the manufacturer and the requirements of the system.

Wire shall be color-coded as noted in the wiring schedules provided in the Plans.

Lead-in cables to extend loop detectors shall be IMSA Type 50-2. Loop lead-in cables shall be manufactured with a size of #16 AWG.

Klik-Its (Power & Tel Enterprise Part #C8820) or approved equivalent shall be used at all loopwire splice locations. All splices must be twisted, soldered and shrink-wrap waterproofed before enclosure is placed.

Home run cables preferably should not be shielded. The use of shielded cable is acceptable provided neither end is grounded.

All cable labeling shall be coordinated with the requirements of the Authority's Toll System Integrator (SI).

INSTALLATION

Install electrical wire and connectors as required, in accordance with the manufacturer's written instructions, the applicable requirements of NEC and the National Electrical Contractors Association's "Standard of Installation", and in accordance with recognized industry practices to ensure that products serve the intended functions.

Coordinate cable and wire installation work with electrical wireway and equipment installation work, as necessary for proper interface.

All wire and cable shall be in first class condition when they are installed. Lo-leak lubricants manufactured for the purpose of a pulling lubricant may be used when necessary.

All wires shall be continuous from outlet and there shall be no unnecessary slack in the conductors.

FIELD QUALITY CONTROL

Prior to energizing, check wire for continuity of circuitry and for short circuits with ohmmeter type testing equipment. Correct malfunction when detected.

Subsequent to wire hook-ups, energize circuitry and demonstrate functioning in accordance with requirements.

655.05 Electrical Boxes and Fittings

RELATED DOCUMENTS

The general provisions of the Contract, including General Provisions and Special Provisions, apply to the work specified in this section.

SUMMARY

The types of electrical boxes and fittings required for the project may include the following:

- NEMA 4X Cabinet for ORT AVI Readers
- Outlet boxes
- Junction boxes
- Pull boxes
- Floor boxes
- Conduit bodies
- Bushings
- Locknuts

QUALITY ASSURANCE

Manufacturers: Firms regularly engaged in the manufacture of electrical units of types and sizes required, whose products have been in satisfactory use in similar service for not less than three years.

Contractor: A firm with at least three years of successful installation experience on projects with electrical installation work similar to that required for the project. Under this definition, Contractor can also be a subcontractor to the General Contractor for the Project.

NEC Compliance: Comply with National Electrical Code (NFPA 70) as applicable to construction and installation of electrical boxes and fittings.

U.L. Labels: Provide boxes and fittings, which have been listed and labeled by Underwriters Laboratories.

NEMA Compliance: Comply with National Electrical Manufacturers Association standards as applicable to nonmetallic fittings for underground installation.

NECA Standard: Comply with applicable portions of the National Electrical Contractors Association's "Standard of Installation".

MANUFACTURERS

Provide products produced by one of the following or approved equal (for each type of box and fitting):

ORT Control Cabinet:

- Hammond Manufacturing (provided by SI and installed by the Contractor)

Interior Outlet Boxes:

- Appleton Electric Co.
- Arrow Conduit and Fittings Corp.
- National Electric Products Co.
- OZ/Gedney Co.
- Steel City, Midland-Ross Corp.

Junction and Pull Boxes:

- Arrow-Hart, Inc.
- General Electric Co.
- OZ/Gedney Co.
- Square D Co.
- Unitil

Conduit Bodies:

- Appleton Electric Co.
- Crouse-Hinds Co.
- Killark Electric Mfg. Co.
- Pyle-National Co.

Bushings, Knockout Closures and Locknuts:

- Allen-Stevens Conduit Fittings Corp.
- Allied Metal Stamping, Inc.
- Appleton Electric Co.
- Carr Co.
- Raco, Inc.
- Steel City, Midland-Ross Corp.
- Thomas and Betts Co., Inc.

MATERIALS

ORT Control cabinet: shall be provided by the Authority's Toll System Integrator (SI) and installed by the Contractor. The following information is provided to assist the Contractor with planning for the associated conduit and wiring work. The ORT Control Cabinet shall have dimensions of:

Height 6'-0"
Width 6'-0"
Depth 1'-6"

FABRICATED MATERIALS

Interior Outlet Boxes: Provide galvanized steel interior outlet wiring boxes, of the type, shape and size, including depth of box, to suit each respective location and installation; constructed with stamped knockouts in back and sides, and with threaded holes with screws for securing box covers or wiring devices.

Interior Outlet Box Accessories: Provide outlet box accessories as required for each installation, including mounting brackets, wallboard hangers, extension rings, fixture studs, cable clamps and metal straps for supporting outlet boxes, compatible with outlet boxes being used and meeting requirements of individual wiring situations. Choice of accessories is Installer's option. All covers for outlet boxes to be stainless steel.

Junction and Pull Boxes: Provide galvanized sheet steel or concrete junction and pull boxes as called for in the Plans with screw-on covers; of the type shape and size, to suit each respective location and installation; with welded seams and equipped with stainless steel nuts, bolts, screws and washers.

Conduit Bodies: Provide galvanized cast-metal conduit bodies, of the type, shape and size, to suit each respective location and installation, constructed with threaded conduit ends, removable cover, and corrosion-resistant screws.

Bushings, Knockout Closures and Locknuts: Provide corrosion-resistant punched-steel box knockout closures, conduit locknuts and malleable iron conduit bushings of the type and size to suit each respective use and installation.

Mounting strut materials and hardware: Provide corrosion-resistant hot dipped galvanized members and stainless steel hardware for all equipment mounting applications. Where strut

material is exposed to the weather, and less than 10 feet off the ground, struts shall be stainless steel. When any galvanized strut member or hardware is cut or the galvanizing is compromised, the affected area shall be wire brushed and cleaned to bare metal and the area shall be given two coats of cold galvanizing (following application instructions).

INSTALLATION OF BOXES AND FITTINGS

Install all equipment cabinets in compliance with NEC requirements, in accordance with the manufacturer's written instructions and with recognized industry practices to ensure the boxes and fittings serve the intended purposes. Contractor shall coordinate all associated conduit, wiring and related work with the Resident and SI to confirm appropriate placement in coordination with ORT Control cabinet installation. Given the final installation of the ORT Control cabinets will likely take place several weeks following the placement of the cabinets in the plaza tunnel, the Contractor shall work with the Resident to provide adequate protection of the cabinets until they are mounted in their final location.

Install electrical boxes and fittings in compliance with NEC requirements, in accordance with the manufacturer's written instructions and with recognized industry practices to ensure that the boxes and fittings serve the intended purposes:

Provide weatherproof outlets for interior and exterior locations exposed to weather or moisture.

Provide knockout closures to cap unused knockout holes where blanks have been removed.

Locate boxes and conduit bodies to ensure accessibility of electrical wiring.

All boxes shall be rigidly secured in position unless otherwise directed

Where standard boxes are not suitable, provide boxes of special design to suit space and function.

655.06 Wiring Devices

RELATED DOCUMENTS

The general provisions of the Contract, including General Provisions and Special Provisions, apply to the work specified in this section.

SUMMARY

Wiring devices are defined as single discrete units of electrical distribution systems, which are intended to carry but not utilize electric energy.

The types of electrical wiring devices required for this project include the following:

- Receptacles
- Switches
- Wall plates

- Plugs
- Connectors
- Breakers

QUALITY ASSURANCE

Manufacturers: Firms regularly engaged in manufacture of wiring devices, of types and ratings required, whose products have been in satisfactory use in similar service for not less than three years.

Contractor: A firm with at least three years of successful installation experience on projects with electrical installation work similar to that required for the project.

NEC Compliance: Comply with National Electrical Code (NFPA No. 70) as applicable to construction and installation of electrical wiring devices.

UL Labels: Provide electrical wiring devices, which have been tested, listed and labeled by Underwriters Laboratories.

NEMA Compliance: Comply with National Electrical Manufacturers Association standards for general- and specific-purpose wiring devices.

MANUFACTURERS

Provide products produced by one of the following:

- Arrow-Hart, Inc.
- Bell Electric Co.
- Bryant Electric Co.
- Crouse-Hinds Co.
- Cutler-Hammer, Inc.
- General Electric Co.
- Gould, Inc.
- Harvey Hubbell Inc.
- Pass and Seymour, Inc.
- Slater Electric, Inc.
- Square D Co.
- Hunt Electronics
- Lutron
- Intermatic
- Paragon
- Unitil

FABRICATED DEVICES

Provide factory-fabricated wiring devices, in type and electrical rating for the service required.

Receptacles: Comply with NEMA Stds. Pub. No. WD1 and as follows:

General-Duty Duplex: Provide duplex general-duty type, spec. grade, receptacles, 2-pole, 3-wire grounding, with green hexagonal equipment ground screw, ground terminals and poles internally connected to mounting yoke, 15-ampere, 125-volts, with metal plaster ears, screw terminal connectors, NEMA configuration 5-15R unless otherwise required.

Heavy-Duty Duplex: Provide duplex type, spec. grade, receptacles, 2-pole, 3-wire grounding, with green hexagonal equipment ground screw, 30-ampere, 125-volts, with metal plaster ears, screw terminal connectors, NEMA configuration L5-30R unless otherwise required.

Switches: Comply with NEMA Stds. Pub. No. WD1 and as follows:

Provide general-duty flush toggle switches, 20-ampere, 120/277 VAC, with mounting yoke insulated from mechanism, equipped with plaster ears, and side-wired screw terminals as follows:

Single pole switches	Double pole switches
Three Way switches	Four Way switches

Breakers: Breakers shall be compatible with existing panel circuits. All breakers necessary will be incidental to the Contract pay items.

WIRING DEVICE ACCESSORIES

Wall Plates: Provide single switch and duplex outlet wall plates for wiring devices, with ganging and cutouts as required, provide with metal screws for securing plates to devices, screw heads colored to match finish of plate, and wall plates possessing the following additional construction features:

Material and Finish: 0.04 inch thick, satin finished stainless steel.

INSTALLATION OF WIRING DEVICES

Install wiring devices where required, in accordance with manufacturer's written instructions, applicable requirements of NEC and National Electrical Contractors Association's "Standard of Installation", and in accordance with recognized industry practices to ensure that products serve intended function.

Delay installation of devices until wiring is completed.

Install receptacles and switches only in electrical boxes that are clean and free from excess building materials, debris, etc.

PROTECTION OF WALL PLATES AND RECEPTACLES

Upon installation of wall plates and receptacles, Contractor shall use caution regarding the use of convenience outlets. At time of completion, replace those items which have been damaged, including those burned and scored by faulty plugs.

TESTING

Test wiring devices to ensure electrical continuity of grounding connections, and after energizing circuitry, to demonstrate compliance with requirements.

655.07 Grounding

SUMMARY

Furnish labor and material to provide grounding facilities for the entire electrical installation as required by all inspecting and jurisdictional authorities as herein specified. The following are included, but not limited to, as items requiring grounding:

- Electrical service neutral conductor.
- Neutral conductor of all transformer secondaries.
- Conduits, boxes and other conductor enclosures. Neutral or identified conductor of interior wiring system.
- Distribution panels, power and lighting panel boards.
- Non-current - carrying parts of fixed equipment, such as transformers, motors, starters, control cabinets, disconnects, lighting fixtures, stand-by generator, etc.
- Metallic cabinets and auxiliary systems cabinets.

EQUIPMENT

Furnish and install all boxes and/or access plates required for installation and inspection of grounding connections to cold water piping system or other made electrodes.

Provide brass identifying tags on all ground clamps.

INSTALLATION

Ground connections made to metallic cold water piping system at such locations as will be readily available for inspection. Provide jumper connections around all meters and shut off devices.

Where cold water piping is not available for ground connections, use other available or made electrodes as described in NEC Sections 250-81 or 250-83.

Conduit Grounding: All grounding bushings within all enclosures, including equipment enclosures, shall be wired together and connected internally to the enclosure grounding lug or grounding bus with bare copper conductor. Grounding conductors sized in accordance with NEC shall be used with all grounding bushings.

Equipment Grounding: All electrical equipment shall be grounded. Most other equipment will be furnished with grounding pads or grounding lugs. All ground connections shall be cleaned immediately prior to connection. The Contractor shall provide all grounding material required but not furnished with the equipment.

No grounding conductor shall be smaller than 12 AWG wire unless it is a part of an acceptable cable assembly.

655.08 Scope of Work/Item Description/Measurement and Payment

INSTALLATION OF CASH LANE CONTROLLER CABINET

RELATED DOCUMENTS

A. Examine Drawings, Contract Conditions all other Sections of the Specifications for requirements which affect work of this Section whether or not such work is specifically mentioned in this Section.
B. Coordinate work with that of all other trades affecting, or affected by work of this Section. Cooperate with such trades to assure the steady progress of all Project work.

DESCRIPTION

The purpose of this section is to provide information related to the work required to prepare the location for the proposed lane controller (LC) cabinet to be installed by the Contractor. This section provides information on how the work by the Contractor will take the LC into consideration. All work shall be coordinated with the Resident and SI. This task includes removing the existing Lane Controller (LC) and the associated conduit and/or wireway, so as to install the conduits and wiring associated with the LC. If deemed appropriate by the Resident and SI, the existing LC quadplex can be reused. Note the SI may request the quadplex be removed to allow direct clean power connection to breakers within the proposed LC installed by the SI.

Submittals

Five days prior to the removal of the LC cabinet, the Contractor will be required to submit three copies of a neat line sketch of the proposed lane controller cabinet location detailing existing and proposed conduit/wireway runs (calling out conduit/wireway sizes and the specific cables/wires in each conduit/wireway) to the LC, AVI, Sensor loops, TCP, DVAS, MLT, RP, Proximity Reader and COS (As shown in the Plans). Included with this sketch will be the Plaza Work checklist from Appendix E that the Contractor must complete, indicating what cables will be routed into the new LC, how much slack is present in each of these existing cables, whether or not existing cables will have to be removed and re-installed (with longer run) in order to reach the new LC, and any extra work that is required. The Resident/SI will have three working days to review the submittal. Work done for this submittal will be incidental to mobilization. After this submittal the exact location of the LC installation will be confirmed by the Resident and the SI. Also to be

confirmed by the Resident and the SI will be the number, size and location of the conduits entering the LC cabinet, conduit/wireway layouts in pit and entering the pit, canopy and booth, islands, under slabs, etc.

Installation

The Contractor shall install all conduit/wireway and power, and data wires, associated with the proposed LC within the LC cabinet so as to be able to connect existing and proposed peripherals to the new LC at the time of installation by the SI.

The Contractor will be required to:

a. terminate clean and dirty power into the LC cabinet or provide alternate termination as directed by the Resident and the SI. Power termination requirements to be confirmed in the field;
b. pull data/power from lane equipment into the LC cabinet with a 36 inch service loop for all data lines (including 120 volt data);
c. label each wire coming into the LC cabinet with numbered tags as directed by the Resident and the SI at the start of the project. Tags shall be neat, legible, waterproof, and approved by the SI/ Resident.

Note: Existing power wires to proposed lane controller to be spliced if necessary following NEC regulations. If any other existing cable will not reach the proposed LC, a new "Home Run" from the existing equipment to the LC will need to be pulled.

Prior to the start of work on the existing toll equipment or power and comms associated with the toll equipment, the Contractor shall coordinate with the Authority and the SI for proper shut down of toll equipment. The SI will shut down the lane equipment prior to work, including LC and AVI systems. The Contractor shall not commence with work associated with toll system components without the Authority's authorization after proper shutdown of equipment by the SI. Upon authorization, the Contractor will disconnect all power connections to the existing LC and peripheral equipment as specified in the Plans. The SI will then disconnect all communication cables to the existing LC and peripheral equipment as specified in the Plans. The Contractor shall coordinate activities with the SI. The SI shall remove equipment within the existing LC cabinet prior to Contractor removal of the existing LC Cabinet. The Contractor will then pull all power and communication cables out, remove existing LC cabinet, and remove existing conduit as necessary install new conduit as necessary to the proposed LC location, and pull all existing cables to the proposed LC location including the existing AVI communications line (if existing length is adequate, otherwise replace per these Specifications). The Contractor will terminate clean and dirty power into the LC cabinet. The SI will install all electronics in the cabinet and terminate all communications cables to the electronics for testing. After the Contractor completes all conduit and power connections, and pulls all existing and proposed communication cables to the new LC cabinet and associated equipment as specified in the Plans, the Contractor is finished with the installation.

Measurement and payment for preparation work associated with the LC cabinet as shown on the Plan drawings and described herein will be per each item. Removal of the existing LC cabinet, installation of receptacles (if applicable), completion of all conduits and wiring associated with the cabinet shall be incidental.

Pulling of wires out of the existing LC, VES and COS cabinets, and re-pulling power wires and data cables as required for the new LC and associated equipment as shown on the Plans will also be incidental. Any wire / cable that has to be pulled completely back to the existing lane equipment and replaced (due to shortness of slack in existing cable) will be considered Contract work, and will be paid under appropriate pay items. All new conduit/wireway installed will be paid under its appropriate pay item.

Payment will be made under:

Pay Item		Pay Unit
655.012	Installation of Cash Lane Controller Cabinet	Each

DVAS MOUNT INSTALLATION

The Contractor shall mount a Pelco EM2200 hook to the underside of the canopy to accept a Costar CHG3000S enclosure for the DVAS camera. The Pelco hook shall be supplied by the SI. The Contractor will be responsible for mounting the hook. Final location shall be approved by the Authority. Any additional hardware required will be incidental to the pay item.

Basis of Payment

Measurement and payment for work the DVAS mount installation as shown on the Plan drawings and described herein will be per each item.

Payment will be made under:

Pay Item		Pay Unit
655.02	DVAS Mount Installation	Each

INSTALLATION OF SENSOR LOOPS

The Contractor shall sawcut concrete pavement slab as directed by the Resident and according to Plans and detailed manufacturer's instructions provided prior to installation. Given the proprietary nature of the loop installation requirements, the manufacturer's instructions will only be provided to the awarded Contractor. Loop installation will involve multiple sawcuts within the limits indicated on the Plans and per manufacturer provided templates. Templates for loop cutting outlines shall be provided by the SI. No loop installation activities shall be done without the SI representative on-site. The SI will also provide the required materials for sealing the loops including but not limited to the required Loctite epoxy, pump and related injection equipment prior to the Contractor placing sensor loops. The Contractor shall be responsible for obtaining and operation of required sawcutting equipment.

NOTE: All dust must be contained so that no silica reaches Authority employees or patrons. This may be accomplished by using wet saws, advanced air filter systems or by building an enclosure around the work area. The Contractor shall provide the Resident a 5-day notice prior to any sawcutting activities.

Basis of Payment

Payment to be made as lump sum for all associated Sensor loops shown on Plan drawings. Sawcutting of pavement, installation of epoxy and loops will be incidental to item.

Payment will be made under:

Pay Item		Pay Unit
655.04	Installation of Sensor Loops	Lump Sum

INSTALLATION OF AVI ANTENNAS

The Contractor shall pick up AVI antennas and mounting equipment at the Maine Turnpike headquarters or a nearby maintenance yard as coordinated by the Resident. The Contractor shall install antennas and mounts in accordance with the manufacturer's instructions. Antenna wires shall be installed and looped, the AVI equipment vendor will arrive to terminate equipment wiring while the Contractor is onsite. If the vendor requires additional work during termination and testing the Contractor must be present to assist.

Basis of Payment

Measurement and payment for work associated with the installation of AVI antennas as shown on the Plan drawings and described herein will be per each item. The Contractor will not pay for the purchase of antennas or the AVI equipment vendor's presence to terminate and tune equipment.

Payment will be made under:

Pay Item		Pay Unit
655.05	Installation of AVI Antennas	Each

INSTALLATION OF AVI READERS

The Contractor shall pick up AVI readers at the Maine Turnpike headquarters or a nearby maintenance facility as coordinated by the Resident. The Contractor shall install readers in NEMA 4X cabinets mounted in the old toll utility building as shown on the Plans. AVI readers shall be installed in accordance with the manufacturer's instructions with oversight by the SI onsite as needed (to be determined by Resident). Reader wires shall be installed and looped. The vendor will arrive to terminate wiring while the Contractor is onsite. If the AVI equipment vendor requires additional civil or electrical work during termination and testing the Contractor must be present to assist.

Basis of Payment

Measurement and payment for work associated with the installation of AVI readers as shown on the Plan drawings and described herein will be per each item. The Contractor will not pay for the purchase of readers or the AVI equipment vendor's presence to terminate wiring and tune equipment.

Payment will be made under:

Pay Item		Pay Unit
655.06	Installation of AVI Readers	Each

TRAFFIC CONTROL PEDESTAL (TCP) PREPARATION WORK

Measurement and payment for preparation work for the TCP as shown on the Plan drawings and described herein will be per each item. Note the procurement and installation of the TCP will be by the SI at a point beyond the completion of this Contract. Preparation work shall include drilling and installing threaded rods with adhesive and protection of associated wiring for the TCP in advance of installation of the TCP by the SI. The Contractor shall provide the following items or approved equals for the TCP anchorage system:

- 4 each - 1/2" x 6-1/2" Hilti HAS 304SS threaded rods, nuts (double nut), flat and lock washers.
- 4 each - Hilti HVU adhesive capsules.
- 4 each – 1/2" SS nuts and fender washers for shimming and leveling the pedestal base.

Steps involved for installation of threaded rods are as follows:

1. Using the Pedestal Base detail in Appendix F as a template, layout and drill four 9/16" holes for the 1/2" threaded rods.
2. Using a compressor and wire brush blow gun, clean out the anchor holes.
3. Use the shop vacuum to clean up all of the concrete dust and metal shavings.
4. For all concrete island installations, install the four ½ inch Hilti HAS 304SS threaded rods (using HVU adhesive capsules according to the manufacturer's instructions).

Final location of TCP and alignment of threaded rod pattern layout shall be confirmed by the Resident and the SI prior to threaded rod installation.

Payment will be made under:

Pay Item		Pay Unit
655.07	Traffic Control Pedestal Preparation Work	Each

ARMORED CABLE

This task shall include the providing and installation of armored cable wire, as described herein for clean and dirty power wiring, and other locations called for in the Plans and Specifications.

Wire: as previously specified in the technical provisions of wires & conductors.

Armored cable is intended to be used in above the drop ceiling only.

Measurement and payment for the installation of armored cable wire as described herein will be per foot, to the nearest 10 foot interval per run. It shall include the furnishing, installation, routing, termination, splices and connection of the wire per the wiring schedule.

Payment will be made under:

Pay Item		Pay Unit
655.09	Armor Cable – 10/3	Linear Foot

AWG WIRE

This task shall include the providing and installation of the AWG wire, as described herein for clean and dirty power wiring, for grounding wires (where applicable) and other locations called for in the Plans and Specifications. All wire installed in conduit must be burial grade, suitable for wet locations.

Basis of Payment

Measurement and payment for the installation of the AWG wire as described herein will be per foot, to the nearest 10 foot interval per run. It shall include the furnishing, installation, routing, termination, splices and connection of the wire per the wiring schedule.

Payment will be made under:

Pay Item		Pay Unit
655.08	#2/0 Wire for UPS re-wiring	Linear Foot
655.10	#4 AWG Wire	Linear Foot
655.101	#6 AWG Wire	Linear Foot
655.11	#10 AWG Wire	Linear Foot
655.12	#12 AWG Wire	Linear Foot
655.13	#14 AWG Wire	Linear Foot

4 pr/24 (CATEGORY 5e) CABLE

This task shall include the providing and installation of the Category 5e cable shown on the Plan drawings and described herein.

Cable: 4 pair, 24 AWG, Category 5e, twisted pair cable. Conductor material shall be bare copper, inner jacket material shall be PVC, cable shall be insulated and unshielded. Must be direct burial type suited for harsh conditions 4pr/24 category 5e cable, as approved.

Basis of Payment

Measurement and payment for the installation of the 4pr/24 category 5e cable will be by linear foot to the nearest 10 ft. interval. It shall include the furnishing, installation and routing of the cable per the wiring schedule.

Payment will be made under:

Pay Item		Pay Unit
655.14	4pr/24 (Category 5e) Cable	Linear Foot

LMR 400 CABLE

This task shall include the providing and installation of the LMR 400 cable shown on the Plan drawings and described herein.

Cable: LMR 400 cable, as approved.

Basis of Payment

Measurement and payment for the installation of the LMR 400 cable will be by linear foot to the nearest 10 ft. interval. It shall include the furnishing, installation and routing of the cable per the wiring schedule.

Payment will be made under:

Pay Item		Pay Unit
655.15	LMR 400 Cable	Linear Foot

FIBER OPTIC CABLE

This task shall include the providing and installation of 62.5/125 micron multimode fiber optic cable as shown on the Plan drawings and described herein. The following Specifications for the selection and installation of fiber-optic cable and associated hardware are intended to ensure a reliable and consistent fiber optic media infrastructure for the MTA. All fiber optic cable termination and the fiber optic patch panels will be provided by the Contractor

Cable: 6-Fiber multi-mode multi-mode Fi, 100 mbs, 62.5/125 Microns, Indoor/Outdoor Riser Rater, ST (Male) Connection, as approved

Specifications: Fiber installed must meet or exceed the following Specifications:

- Multimode fiber installed cable shall be 62.5/125micron core/cladding, enhanced grade, multimode, and graded index glass fiber. All materials in the cable shall be dielectric.

- Installed fiber must meet or exceed the following performance Specifications:

Wavelength (nm)	Max. Attn.(dB/Km)	Min. Bandwidth (Mhz*Km)
850	3.0	200
1,300	0.9	500

- Plenum rated cable shall be used for all interior installations. Plenum rated cable shall be:

  - Tight buffered 900 um
  - Mechanical strippable Teflon (for plenum applications)
  - EIA/TIA -598 color coding for fiber optic cable
  - Aramid yarn strength member
  - Capable of supporting a short-term tensile load of 400 lb. without stretching.
  - Capable of bend radii as small as 20 x outside cable diameter (under installation load) and 10 x outside cable diameter (long term load)
  - Capable of a minimum crush resistance of 850 lb./in.

- Corning and Berk-Tech fiber are currently recommended for installation. Cable from other manufacturers will be considered. All cable installed must be cleared by MTA prior to installation.

All cable is to be fully supported throughout its entire run.

At no time shall more than 400 pounds of tension be placed on any fiber cable while it is being pulled through tray or conduit. It is preferred that all fiber cable be pulled with hand power only. If power winches or mechanical advantage devices are used to pull cable, a tensionometer must be used to insure that maximum tension is not exceeded. Alternatively, a "mechanical fuse" rated at 350 pounds may be included in the linkage. Torsion shall be avoided by the use of a swivel at the cable end. While under tension, a minimum bend radius of 20 times the outside cable diameter will be maintained through the use of pulleys and sheaves where required. After pulling, no bend may have a radius, at rest, of less than 10 times the outside cable diameter.

Each cable is to be permanently labeled at each end with a unique cable number. In addition, labels shall be affixed to the cable at every transition of a vault, hand hole, riser closet, or major pull box.

Each fiber optic strand shall be labeled with a unique identifier at the ST coupler.

Fiber ends are to be terminated in ST-type connectors. No splices will be permitted. The cable shall be continuous run from LC to server room fiber switch location.

At each end of the cable, sufficient slack (15 - 30') shall be left to facilitate reasonable

future relocation of the fiber switch or LC. Slack shall be mounted on walls or upper ladder racks.

Testing: Contractor shall test all long reels with an OTDR for length and transmission anomalies while on the reel prior to installation. It is suggested that each individual fiber in a cable regardless of length be tested with an OTDR for length and transmission anomalies while on the reel before installation.

All multimode fiber strands shall be tested end-to-end for bi-directional attenuation, 850 nm/1300 nm for multimode. Tests should be conducted in compliance with EIA/TIA-526-14 or OFSTP 14, Method B, according to the manufacturer's instructions for the test set being utilized.

Tests must ensure that the measured link loss for each strand does not exceed the "worst case" allowable loss defined as the sum of the connector loss (based on the number of mated connector pairs at the EIA/TIA-568 B maximum allowable loss of 0.75 dB per mated pair) and the optical loss (based on the performance standard above, 2.1.1 and 2.2.1).

After termination, each fiber shall be tested with an ODTR for length, transmission anomalies, and end-to-end attenuation. Results are to be recorded and supplied to MTA in the form of hard-copy printouts or photographs of screen traces.

After termination each terminated fiber is to be tested for end-to-end loss with a power meter/light source. As above, results are to be recorded and supplied to MTA.

The Contractor shall review all end faces of field terminated connectors with a fiber inspection scope following the final polish. Connector end faces with hackles, scratches, cracks, chips and or surface pitting shall be rejected and repolished or replaced if repolishing will not remove the end face surface defects. The recommended minimum viewing magnifications for connector ends are 100X for multimode fiber and 200X for single mode fiber.

Basis of Payment

Measurement and payment for the installation of the Fiber Optic cable will be by linear foot to the nearest 10 ft. interval. It shall include the furnishing, installation, termination and routing of the cable per the wiring schedule.

Payment will be made under:

Pay Item		Pay Unit
655.16	Fiber Optic Cable – 6 Fiber	Linear Foot

IVIS HOMERUN LOOP CABLE (IMSA 50-2 #16)

This task shall include the providing and installation of the IVIS homerun loop cable (IMSA 50-2 #16) shown on the Plan drawings and described herein.

Cable: IMSA 50-2 #16 cable loop detector wire shall be as follows:

- Conductors: Solid or stranded tin copper

- Insulation: Polyethylene
- Conductor Configuration: Twisted pair
- Shield: Aluminum/Mylar tape
- Outer Jacket: Low-density polyethylene

Cable shall have two conductors, #16 AWG, 19 strand. Cable must be direct burial grade suitable for installation in the tunnel, beneath the roadway, within the barrier and any other locations shown on the Plan or described within the design documents. All loop sensor homerun cables shall have tape with length markings.

Basis of Payment

Measurement and payment for the installation of the IMSA 50-2 #16 cable will be by linear foot to the nearest 10 ft. interval. It shall include the furnishing, installation and routing of the cable per the wiring schedule.

Payment will be made under:

Pay Item		Pay Unit
655.17	IVIS Homerun Loop Cable (IMSA 50-2 #16)	Linear Foot

PVC CONDUIT

This task shall include providing and the installation of PVC Conduit as shown on the Plan drawings and described herein. All conduit shall be installed per NEC specification. Connections to specialized fittings are to be compatible with adjoining conduit.

Joints shall be made in accordance with ASTM D 2855. Solvent cement shall meet the requirements of ASTM D 2564 with particular attention to matching the viscosity to the conduit size.

Joint adhesives shall be in accordance with ASTM D2517.

All conduit runs shall be watertight. Slope conduit to drain into junction boxes.

All empty conduits shall have a labeled pull string. Pull strings shall have length markings and should be used for long conduits over 50 feet or for all underground installations. Clean, plug and seal conduit ends after installation.

Basis of Payment

Measurement and payment for installing PVC Conduit as shown on the Plan drawings and described herein will be per linear foot of each type of underground or exposed conduit actually furnished, installed, and accepted at the Contract price per linear foot. It shall include the furnishing, installing, supporting and connection of the conduit and all various hardware necessary for the installation. This price shall include the cost of hand digging, trenching, or plowing; furnishing and installing the conduit; furnishing special backfilling materials, pull string,

fittings, groundings and bonding; test cleaning interiors of conduits and all materials, labor, equipment and incidentals necessary to complete the work.

Payment will be made under:

Pay Item		Pay Unit
655.200	1- 1/2” Schedule 40 PVC Conduit	Linear Foot
655.201	3” Schedule 40 PVC Conduit	Linear Foot
655.202	4” Schedule 40 PVC Conduit	Linear Foot
655.2021	1” Schedule 80 PVC Conduit	Linear Foot
655.203	1-1/2” Schedule 80 PVC Conduit	Linear Foot
655.2031	2” Schedule 80 PVC Conduit	Linear Foot
655.204	3” Schedule 80 PVC Conduit	Linear Foot
655.205	4” Schedule 80 PVC Conduit	Linear Foot

GALVANIZED RIGID METAL CONDUIT (RMC)

This task shall include providing and the installation of Galvanized RMC as shown on the Plan drawings and described herein. All fittings shall be threaded, or approved compression type (approved by the engineer and compatible with the conduit), so as to be waterproof. Conduit shall be installed and grounded per NEC regulations. All supports shall be hot dipped galvanized or stainless steel (approved by the engineer and compatible with the conduit).

Basis of Payment

Measurement and payment for furnishing and installing the Galvanized RMC as shown on the plan drawings, where necessary, and described herein will be per foot. It shall include the furnishing, installing, supporting and connection of the conduit and misc. hardware necessary for the installation.

Payment will be made under:

Pay Item		Pay Unit
655.206	1” Galvanized Rigid Metal Conduit	Linear Foot
655.2061	3/4” Galvanized Rigid Metal Conduit	Linear Foot
655.207	1-1/2” Galvanized Rigid Metal Conduit	Linear Foot
655.2071	2” Galvanized Rigid Metal Conduit	Linear Foot
655.208	3” Galvanized Rigid Metal Conduit	Linear Foot

LIQUID TIGHT METALLIC FLEXIBLE CONDUIT

This task shall include providing and the installation of Liquid Tight Metallic Flexible Conduit as shown on the Plan drawings and described herein. All conduit shall be watertight with flexible PVC coating over galvanized steel flex tubing. Conduit shall be installed and grounded per NEC regulations. All supports for shall be hot dipped galvanized or stainless steel. Connections shall be specialized fittings to be compatible with adjoining conduit and watertight.

Basis of Payment

Measurement and payment for installing the Liquid Tight Metallic Flexible Conduit as shown on the Plan drawings and described herein will be per linear foot actually furnished, installed, and accepted at the Contract price per linear foot. This price shall include the cost of: furnishing and installing the conduit; pull string, fittings, groundings and bonding; test cleaning interiors of conduits and all materials, labor, equipment and incidentals necessary to complete the work.

Payment will be made under:

Pay Item		Pay Unit
655.209	1/2" Liquid Tight Metallic Flexible Conduit	Linear Foot
655.210	3/4" Liquid Tight Metallic Flexible Conduit	Linear Foot
655.2101	1-1/2" Liquid Tight Metallic Flexible Conduit	Linear Foot
655.2102	2" Liquid Tight Metallic Flexible Conduit	Linear Foot

ELECTRICAL METALLIC TUBING (EMT) CONDUIT

This task shall include the installation of the EMT as shown on the Plan drawings and described herein. All fittings shall be an approved compression type (approved by the engineer and compatible with the conduit). Conduit shall be installed and grounded per NEC regulations. All supports for conduit shall be galvanized steel (with similar or better galvanizing than the tubing). Fittings are to be joined using couplings as recommended by the manufacturer.

Basis of Payment

Measurement and payment for installing the EMT as shown on the Plan drawings and described herein will be per foot actually furnished, installed, and accepted at the Contract price per linear foot. This price shall include the cost of: furnishing and installing the conduit; pull string, fittings, groundings and bonding; test cleaning interiors of conduits and all materials, labor, equipment and incidentals necessary to complete the work.

Payment will be made under:

Pay Item		Pay Unit
655.211	1-1/2" Electrical Metallic Tubing Conduit	Linear Foot
655.212	2" Electrical Metallic Tubing Conduit	Linear Foot
655.215	3/4" Electrical Metallic Tubing Conduit	Linear Foot

RMC CONDULETS

This task shall include the installation of Rigid Metal condulets where called for on the plans, or where called for on installation drawings. The condulets shall be hot dipped galvanized and waterproof, with threaded couplings or approved compression type couplings (if recommended by the manufacturer and compatible with adjoining conduit). Types of condulets include, but are not limited to "LB", "T", "LR", "LL". All openings shall have rubber gaskets.

Basis of Payment

Measurement and payment for installing the condulets as described herein will be per item. It shall include the furnishing and installation and of the condulet, and all associated hardware.

Pay Items are as follows:

Item	Description	Unit
655.216	1” Rigid Metal Conduit Condulets	Each
655.217	1 ½” Rigid Metal Conduit Condulets	Each
655.218	2” Rigid Metal Conduit Condulets	Each
655.219	3” Rigid Metal Conduit Condulets	Each

INSTALLATION OF PULL BOXES

This task shall include providing and installing:

- The type A pull box for interior, dry locations as shown on the Plan drawings and detailed herein, or where used elsewhere.
    - Materials: 4” x 4” x 2” steel; equal to Appleton 4SD1 or better.

- The type C pull box as shown on the Plan drawings and detailed herein. The C pull box shall be installed in booth pits, or building utility pits, or where PVC conduit is used.
    - Materials: 18” x 18” x 6” metal, NEMA 3R; Painted steel.

- The type D pull box as shown on the Plan drawings and detailed herein, or where used elsewhere.
    - Materials: 6” x 6” x 4” NEMA 4X.

- The type E pull box as shown on the Plan drawings and detailed herein. The E pull box shall be installed in booths/buildings in dry locations to pull communications cables, or shown elsewhere on the Plans, or where needed to complete the work.
    - Materials: 6” x 6” x 6” steel, indoor rated; equal to Hoffman A-606CH or better.

- The type F pull box as shown on the Plan drawings and detailed herein. The F pull box shall be installed in booth pits, or building utility pits, or where this size is to be used in a wet location or exterior location.
    - Materials: 4” x 4” x 4” plastic, medium duty; equal to or better than Appleton JIC-2

- The type G pull box as shown on the Plan drawings and detailed herein. The G pull box shall be installed in concrete slabs.

    - Materials: 8.5” x 6.5” x 6” Underground Enclosure Assembly, Monolithic Polymer Concrete, heavy duty; equal to or better than Quazite - Tr15 PC0608Z80017

- The type H pull box as shown on the Plan drawings and detailed herein. The H pull box shall be installed in concrete slabs.

    - Materials: 21” x 15” x 16” Underground Enclosure Assembly, Monolithic Polymer Concrete, heavy duty; equal to or better than Quazite - Tr15 PC0608Z80017

If equipment is to be installed at a later date insure adequate slack in the junction box for termination and additional 4 inch for possible re-termination. For pass through junction boxes no slack is required. For specific equipment the following guidelines apply:

- Sensor Loops: A single slack loop of 12” – 24” for convenience of splicing.
- DVAS: Slack loop to allow for distance to mounting location of camera plus an additional 3 feet.
- LC: 4 feet of slack at LC mounting location.

Basis of Payment

Measurement and payment for installing the pull boxes as shown on the Plan drawings and described herein will be per each item. It shall include the furnishing, installation, mounting of the box, and the drilling of holes into the box for conduits.

Payment will be made under:

Pay Item		Pay Unit
655.221	Type A 4”x4”x2” interior, Pull Box	Each
655.222	Type C 12”x12”x6” NEMA 4x Pull Box	Each
655.223	Type D 12”x 12” x6” S.S. NEMA 4x Pull Box	Each
655.224	Type E 6”x6”x6” interior Steel Pull Box	Each
655.225	Type F 4”x4”x4” exterior plastic Pull Box	Each
655.226	Type G 8.5”x6.5”x 6” Quazite Pull Box	Each
655.227	Type H 21”x15”x16” Quazite Pull Box	Each

GALVANIZED STEEL JUNCTION BOX

This task shall include providing and installing galvanized steel watertight junction boxes measuring 12” x 12” x 6” or 18” x 18” x 6” to provide an access point from rigid metal conduit to tolling equipment mounted to the canopy as shown in the Plan drawings. Junction boxes must be approved by Resident.

Basis of Payment

Measurement and payment for installing the junction boxes as shown on the Plan drawings and described herein will be per each item. It shall include the furnishing, installation, mounting of the box, and the drilling of holes into the box for conduits.

Payment will be made under:

Pay Item		Pay Unit
655.30	12” x 12” x 6” Galvanized Junction Box	Each
655.31	18” x 18” x 6” Galvanized Junction Box	Each

24” x 24” x 12” JUNCTION BOX

This task shall include providing and installing 24” x 24” x 12” watertight junction boxes to be cast-in-place into the barrier as shown in the Plan drawings. Junction box shall be nonmetallic or galvanized and able to be placed in concrete. Access must be provided through the top cover which shall be flush with the top of barrier after placement. Junction boxes must be approved by Resident.

Basis of Payment

Measurement and payment for installing the junction boxes as shown on the Plan drawings and described herein will be per each item. It shall include the furnishing, installation, mounting of the box, and the drilling of holes into the box for conduits.

Payment will be made under:

Pay Item		Pay Unit
655.40	24” x 24” x 12” Junction Box	Each

36” x 30” x 20” NEMA 4X CABINET

Provide and install NEMA 4X stainless steel equipment cabinets as designated on the Plan drawings to house the AVI Readers. Cabinets shall provide equipment mounting rails as appropriate and shall provide sufficient space for the enclosed equipment. Doors for the equipment cabinets shall be secured with standard interchangeable cylinder locks that match the existing (BEST) system presently in use by MTA. A closed cell neoprene gasket shall be utilized to prevent water entry at the door. A handle controlled latching system shall be included to simplify access to the cabinets. The door shall be able to be opened and closed without need for separate latching hardware. A 120-Volt single-phase three-wire circuit shall be furnished and installed for clean power to a quadplex receptacle (Type 5-15R) that shall be provided within each cabinet as shown on the Plans. The quadplex receptacles shall be orange with stainless steel cover.

AVI Reader cabinets shall be NEMA-4X with minimum dimensions of:

- Height 36”

- Width 30”
- Depth 20”

AVI Reader cabinets shall be fabricated with internal pieces of aluminum angle that is positioned to support the reader and provide 19 inch wide rack mounting with minimum depth of 15 inches. The AVI Reader and associated contiguous RF rack height is 21.05 inches. Mounting shall be configured per RS-310 (EIA rack spacing).

Basis of Payment

Measurement and payment for installing the NEMA 4X Cabinets as shown on the Plan drawings and described herein will be per each item. It shall include the furnishing, installation, mounting of the box, and the drilling of holes into the box for conduits. Installation of receptacles and completion of all conduits and wiring associated with the cabinet shall be incidental.

Payment will be made under:

Pay Item		Pay Unit
655.42	36” x 30” x 20” NEMA 4X Cabinet	Each

PLASTIC WIREWAY

This task shall include providing and the installation of plastic wireway in the tunnel as shown on the Plan drawings and/or described herein. Wireways shall be plastic NEMA 4R, and shall be installed and grounded per NEC regulations. All supports for wireways shall be hot dipped galvanized or stainless steel.

Basis of Payment

Measurement and payment for installing the Plastic Wireways as shown on the Plan drawings and described herein will be per foot, to the nearest two foot increment above the final installed segment. It shall include the furnishing, installing, supporting and connection of the wireway and all misc. hardware necessary for the installation. It shall also include all end caps, covers, drilling of holes for conduits, fabrications for 90 degree bends, etc.

Payment will be made under:

Pay Item		Pay Unit
655.63	4-inch x 4-inch Plastic NEMA 4R Wireway	Linear Foot
655.64	6-inch x 6-inch Plastic NEMA4R Wireway	Linear Foot

REMOVAL OF EXISTING SELECT TOLL EQUIPMENT

The work shall include the removal of existing select toll equipment, defined as the cables/conduit related to removed equipment, existing island traffic light, light curtains, and overhead scanner. Work shall be coordinated with the SI who will be responsible for removing the existing VES cameras, VES lighting, mounting pole(s) and height detector. The removal of existing select toll equipment shall include removing all associated equipment, enclosures, associated pedestals, removing any grout bases, cutting anchor bolts flush with surface, and grouting over any holes or irregularities. It shall also include removal of all associated power and data cables from the existing LC, and the removal of dirty power to the VES lights after removal of VES equipment by the SI. All cables/wires/conduits abandoned from the removal of the existing select toll equipment shall be removed (unless housed in a conduit with other cables, making it impossible to remove without removing and replacing the cables/wires that are staying). Removing abandoned cables/wires/conduits shall be incidental. All existing select toll equipment removed shall be done with care, without harm to the equipment, and shall be stacked at the System Integrator Warehouse in Portland, ME.

Basis of Payment

Payment will be made under:

Pay Item		Pay Unit
655.71	Removal of Existing Select Toll Equipment	Lump Sum

KEY SWITCH

A key switch similar to existing key switches in use within the toll system shall be installed in line between clean power panel and power lead for each pair of VES cameras and each DVAS camera.

Basis of Payment

Work shall include furnishing all materials and hardware, and labor and equipment to install. All conduit and wires will be paid under separate pay items.

Payment will be made under:

Pay Item		Pay Unit
655.81	Key Switch	Each

RECEPTACLE BOXES

A convenience duplex outlet of NEMA type 5-15R may be required near new lane controllers at a location to be determined by the Resident and the SI. Covers shall be stainless steel.

Basis of Payment

Work shall include furnishing all materials and hardware, and labor and equipment to install. All conduit and wires will be paid under separate pay items.

Payment will be made under:

Pay Item		Pay Unit
655.82	Duplex Receptacle	Each

RECEPTACLE BOXES

NEMA type L5-30R receptacles are required for the Cash Lanes where shown on the Plan drawings and installation instructions. Additional receptacle locations maybe determined by the Resident and SI. Covers shall be stainless steel.

Basis of Payment

Work shall include furnishing all materials and hardware, and labor and equipment to install. All conduit and wires will be paid under separate pay items.

Payment will be made under:

Pay Item		Pay Unit
655.83	NEMA L5-30R Receptacle	Each

SPECIAL PROVISION

SECTION 655

ELECTRICAL

(Lightning Suppression System)

655.81 Description

This task shall include furnishing and installing the lightning protection system as described in the Plan drawings and described herein. Drawings and general provisions of this Contract, including General Provisions and Special Conditions, apply to work of this Section.

The task also includes obtaining a UL Master Label Certificate for the completed lightning protection as a UL Class I ordinary structure.

655.82 Submittals

1. Product Data: For air terminals and mounting accessories, grounding conductors, grounding electrodes, and ground connection equipment.
2. Shop Drawings: Detail lightning protection system, including air-terminal locations, conductor routing and connections, and bonding and grounding provisions. Include indications for use of raceway, data on how concealment requirements will be met, and calculations required by NFPA 780 for bonding of grounded and isolated metal bodies.
3. Qualifications: Qualification data for firms and persons specified in "Quality Assurance" Article to demonstrate their capabilities and experience. Include data on listing or certification by an NRTL or LPI.
4. Inspection: Field inspection reports indicating compliance with UL Master Label Certification.

655.83 Quality Assurance

1. Installer Qualifications: Engage an experienced installer who is an NRTL or who is certified by LPI as a Master Installer/Designer. Installer shall be UL listed as a lighting protection installer.
2. Listing and Labeling: All system components utilized in the installation shall comply with the Standard for Lightning Protection Components, UL 96A.

655.84 Coordination

Coordinate installation of lightning protection with installation of other tolling systems and components, including electrical wiring, supporting structures and materials, metal bodies requiring bonding to lightning protection components, and finishes.

655.85 Products

Subject to compliance with requirements, provide products by one of the following manufacturers or approved equal:

1. Automatic Lightning Protection.
2. ERICO International Corporation.
3. Harger Lightning Protection, Inc.
4. Heary Bros. Lightning Protection Co. Inc.
5. Independent Protection Co.
6. Robbins Lightning Inc.
7. Thompson Lightning Protection, Inc.

Air Terminals shall be NFPA Class I, solid copper, 3/8" diameter, by 24" tall or 10" tall, as indicated on the Contract Drawings. Main roof conductors as down conductors shall be bare copper in sizes as indicated on the Contract Drawings. Grounding electrodes shall be copper-clad steel, 3/4" diameter by 10'-0" long.

655.86 Execution

All work shall conform to the requirements contained in the latest edition of UL 96A, Installation Requirements for Lightning Protection Systems, and in the latest edition of NFPA 780 Standard for the Installation of Lightning Protection Systems.

Install conductors with direct paths from air terminals to ground connections. Conductors shall be supported for their entire length without travel through free air. No bend of a conductor shall form an included angle of less than 90 degrees or have a radius of bend less than 8 inches.

Conductors shall not be directly attached to aluminum or galvanized steel. Do not combine materials that can form an electrolytic couple that will accelerate corrosion in the presence of moisture unless moisture is permanently excluded from junction of such materials.

Main conductors shall be fastened at intervals not exceeding 3 feet.

Down conductors shall be installed within Schedule 80 PVC conduit for physical protection.

Cable Connections: Use UL listed connectors or approved exothermic-welded connections for all conductor splices and grounding connections.

UL Inspection: Provide inspections as required to obtain a UL Master Label Certification for the system.

LPI Certification: Provide an inspection by an inspector certified by LPI to obtain an LPI certification.

655.87 Method of Measurement

Lightning Suppression Systems will be measured by each lightning suppression system shown on the plans.

655.88 Basis of Payment

The accepted quantity of Lightning Suppression System will be paid for at the Contract unit price per each which shall include excavation, air terminals, grounding rods, heavy duty ground test wells with cover, copper wire, associated hardware for a complete operational system, and system certification.

Payment will be made under:

Item	Description	Unit
655.80	Lightning Suppression System	Each

SPECIAL PROVISION

SECTION 655

ELECTRICAL

(LED Canopy Light Fixture Install or Replace)

655.01 Description

This work shall consist of furnishing and installing two new LED light fixtures (into existing light housings, both recessed and surfaced mounted) per lane in the existing and proposed toll plaza canopies in accordance with these Specifications, and as shown on the Plans or as approved by the Resident. All remaining light fixtures shall have the bulbs removed.

655.011 General

The Contractor shall submit shop drawing and an installation plan for installing new LED fixtures into the existing light fixture housings for approval.

The Contractor shall transport all working existing light fixtures and bulbs removed to the Maine Turnpike Sign Shop at Mile 58.3 Northbound.

655.02 Materials

Provide products produced by one of the following manufacturers or an approved equal:

- CREE Inc. – BetaLED 304 Series
- Dialight Corporation – STW Series

655.03 Method of Measurement

LED replacement light fixtures will be measured by each unit, installed, and accepted.

655.04 Basis of Payment

LED replacement light fixtures will be paid for at the Contract unit price each which payment shall be full compensation for the removal of the existing light fixtures, furnishing and installation of the new light fixture into the existing fixture housing, stacking, delivery, and all other materials, labor, tools, equipment and incidentals necessary to complete the work.

Payment will be made under:

Pay Item		Pay Unit
655.91	LED Canopy Light Fixture Install or Replace	Each

SPECIAL PROVISION

SECTION 656

TEMPORARY SOIL EROSION AND WATER POLLUTION CONTROL

Section 656 of the Standard Specifications and the General Provisions is deleted in its entirety and replaced with the following:

656.01 Description

This work shall consist of providing temporary erosion and water pollution control during construction in accordance with these Specifications, standard details, Best Management Practices, or as otherwise directed.

All temporary erosion control devices shall be in place and approved by the Resident prior to any operations resulting in disturbed area. The Contractor is responsible for maintaining all erosion control measures in effective operating condition, including repairing and replacing damaged or missing erosion control material until areas are permanently stablized. The Contractor shall maintain these devices in a clean and properly operating condition as described herein.

Prior to construction, the Contractor shall properly install sediment barriers (e.g., silt fence) at the edge of any downgradient disturbed area and adjacent to any drainage channels within the distrubed area. The Contractor shall maintain the sediment barriers until the disturbed area is permanently stabilized.

The Contractor is responsible for all temporary drainage and erosion control measures. The Contractor shall review his construction operations and staging to determine if additional erosion control measures are required. The Resident may also request additional erosion control measures. The cost for all erosion control devices necessary, due solely to the Contractor's construction operations and not shown on the Plans, shall be borne solely by the Contractor. The frequency of inspection of these devices by the Contractor and the Erosion Control Compliance Officer (ECCO) shall be weekly and before, during and immediately following a rainfall of greater than 1/2 inch in a 24-hour period.

656.02 Temporary Erosion and Sedimentation Control Devices - Materials

The Contractor shall install and maintain all temporary erosion and sedimentation control materials in accordance with the manufacturer's recommendations or the latest BMP's.

1. Baled hay shall be bales at approximately 14 by 18 by 30 inches, or an equivalent, securely tied to form a firm bale.
2. Flexible drainage pipe shall consist of collapsible neoprene pipe, a minimum of 12 inches in diameter or equal.
3. Silt Fence

    (a) Posts - Either hardwood posts or steel posts shall be used. Hardwood posts shall be straight, at least 18 inches longer than the height of the silt fence

and at least one inch by one inch.

Staples shall be of No. 9 wire.

Steel posts shall be at least 18 inches longer than the height of the silt fence and have the means provided for fastening wire to the fence.

(b) Wire Support Fence - If required, wire support fence shall be at least two inches higher than the height of the silt fence. Horizontal and vertical wires shall be spaced no more than six inches apart. The top and bottom wires shall be at least 10 gauge; all other wires at least 12 gauge.

(c) Fabric - The woven geotextile fabric and components shall be made from polypropylene, polyester, polymide or other chemically stable material and be resistant to ultraviolet radiation degradation for at least 12 months of installation. Silt retention capacity shall be no less than 75 percent. The fabric shall have a Mullen burst test of no less than 260 pounds per square inch with a maximum average sieve opening size of No. 20 to No. 60. Roll width of the fabric shall be no less than six inches wider than the height of the fence, except fabric for boom supported floating silt fence which shall be no less than two feet wider than the design width.

656.03 Temporary Erosion and Sedimentation Control Devices - General

Temporary Erosion Checks - Temporary erosion checks shall be constructed in ditches and at other locations designated. Checks shall be in accordance with the Standard Detail unless otherwise directed.

Baled hay shall be used in other areas as necessary to inhibit soil erosion.

During winter construction, November 1st through April 15th, all areas being constructed within 75 feet of a protected natural resource shall be protected with a double row of silt fence.

Sediment deposits behind haybales and silt fence shall be removed when the depth of sediment reaches 50 percent of the erosion control device height.

The Contractor is also required to have on-site, at all times, 25 percent additional Contract quantities of silt fence for use as backup devices.

656.04 Temporary Erosion and Sedimentation Control Devices – Construction Requirements

1. Erosion Control Filter Berm

The Contractor may opt to furnish and install an erosion control filter berm in lieu of silt fence. The erosion control filter berm shall be a water permeable windrow of a composted bark mix to remove suspended soil particles from water moving off the site. Erosion control filter berm shall be considered an erosion control device. The material and specific application shall be submitted to the Resident for approval.

The erosion control berm shall be placed uncompacted, in a windrow in locations approved by the Resident. The cross section of the berm shall be four feet wide at the base and 1-1/2 feet high at the center. The erosion control filter berm shall be removed when no longer required, as determined by the Resident, and shall be distributed over an adjacent area.

2. Temporary Berms

When designated, temporary barriers shall be constructed along the edge of the embankment. The barriers shall be of embankment earth material, gravel or sand as available and shaped approximately as shown in the Standard Details. The barriers shall be compacted with the wheels of construction equipment. When placed on pavement, the berms shall be constructed of asphalt grindings or other non-erodible soil material as approved by the Resident, and shaped as shown in the Standard Details.

At designated intervals, temporary slope drains shall be constructed with a crescent shaped barrier placed at each slope drain to direct the water into the inlet pipe.

3. Temporary Slope Drains

Collapsible pipe with corrugated metal pipe inlet shall be placed down the embankment slopes at designated locations and in accordance with the Best Management Practices.

At the outlet end of the drain, dumped stone shall be placed to prevent scoring unless otherwise directed.

4. Silt Fence

The silt fence shall be installed downhill of disturbed slopes as shown on the Plans or as approved. The Contractor shall have the option to provide a reinforced filter fabric or an un-reinforced filter fabric attached to a wire fence.

The fence posts shall be spaced as specified by the Resident, however, not to exceed a maximum of eight feet [2.5 m] apart when either type of silt fence is used and be driven a minimum of 18 inches [450 mm] into the ground.

The geotextile fabric shall be secured to the post or fence by suitable staples, tie wire or hog rings in such a manner as to prevent tearing and sagging of the fabric. The bottom flap of the geotextile fabric shall be entrenched into the ground a minimum depth of six inches [150 mm] to prevent water from flowing under the fence. The geotextile shall be spliced together only at support posts with a minimum six inches [150 mm] overlap and secure post connection which prevents leakage of silt. The top of the geotextile shall be installed with a reinforced top end section.

The Contractor shall maintain the silt fence in a functional condition at all times. All deficiencies shall be immediately corrected by the Contractor. The Contractor shall make a daily inspection of silt fences in areas where construction activity causes drainage runoff, to ensure that the silt fences are properly located for effectiveness. Where deficiencies exist, additional silt fences shall be installed as approved or otherwise directed.

Sediment deposits shall be removed when sediments reach 50 percent of the height of the device. All sediment deposits remaining in place after the device is no longer required shall be graded to conform to the existing ground, seeded and mulched immediately.

Geotextile fabric which has decomposed or has become ineffective and is still needed shall be replaced with material equal to the original design.

656.05 Temporary Erosion and Sedimentation Control Devices - Maintenance

The erosion control devices will be cleaned, repaired or replaced as necessary. All deficiencies shall be corrected immediately by the Contractor.

656.06 Temporary Erosion and Sedimentation Control Devices - Removing and Disposing

When disturbed areas have been permanently stabilized, temporary erosion control devices, including stone check dams, shall be removed. However, erosion control mix filter berms may be spread out, seeded and left to decompose. Areas disturbed during the removal of the erosion control devices shall be repaired and properly stabilized.

When removed, such devices may be reused in other locations provided they are in good condition and suitable to perform the erosion control for which they are intended. Reused devices, if approved, will be measured for payment.

656.07 Erosion Control Compliance Officer

The Contractor shall designate an Erosion Control Compliance Officer (CECCO) on this Project who shall be a "DEP Certified Contractor" or have had equivalent training approved by the Authority. The Contractor shall provide the Resident with the name of the CECCO and any phone numbers or pager numbers that can be used to contact the person in case of emergency.

Before commencing any work that could disturb soils or impact water quality, the CECCO must field review the Project with the Resident's ECCO (RECCO).

656.08 Inspection and Recordkeeping

The CECCO shall accompany the RECCO in the inspection of all erosion control devices. An inspection log shall be maintained by the Resident for the duration of the Project. The log will include daily on-site precipitation and air temperature as well as the performance, failure and/or any corrective action for all erosion and sedimentation controls in place. The log will be updated at least weekly and after all significant storm runoff or flood events. The log shall be signed by the RECCO and the CECCO after each inspection.

Failure to comply with the erosion and sedimentation control requirements herein or as directed by the RECCO within 24-hours after the violation is noted in the inspection log, will result in the $1,000 per day per violation penalty until the violation is corrected to the satisfaction of the Resident.

656.09 Method of Measurement

Baled hay will be measured for payment by the number of bales or bags satisfactorily placed.

Temporary berms and temporary slope drains will be measured for payment by the linear foot measured parallel with the flow line including the pipe inlet.

Temporary silt fence will be measured by the linear foot along the gradient of the fence, end post to end post.

Erosion control filter berm shall be measured by the linear foot.

The quantity of additional haybales and silt fence material required herein will be measured for payment only when and if they are actually put to use as additional measures on the Project as approved by the Resident. Haybales and silt fence material used for maintenance or replacement of existing devices will not be measured for payment.

The removal of silt and other material from behind the erosion control devices will not be measured separately for payment, but shall be incidental to the Erosion Control items.

656.10 Basis of Payment

The accepted quantity of baled hay will be paid for at the Contract unit price each for each bale which price shall be full compensation for furnishing and placing the bales, for furnishing and driving the stakes for baled hay, for maintaining the bales and stakes, and for the removing and disposing of the bales and stakes when no longer needed.

The accepted quantity of temporary berms will be paid for at the Contract unit price per linear foot of berm which price shall be full compensation for furnishing, placing and compacting material, for maintaining and for removing the berm when no longer needed.

There will be no separate payment for excavation in the construction of temporary erosion control items under this Section and all necessary excavation shall be incidental to the work.

The accepted quantity of temporary silt fence will be paid for at the Contract unit price per linear foot complete in place. Payment shall be full compensation for furnishing, installing, maintaining, replacing deteriorated geotextile and clogged geotextile when required and for removing and disposing of the fence when no longer needed.

The accepted quantity of erosion control filter berm will be paid for at the Contract unit price per linear foot under Item 656.632, 30 Inch Temporary Silt Fence, which price shall be full

compensation for furnishing, placing, maintaining, and removing the erosion control filter berm.

Cost of seeding and mulching the area after removal of the temporary silt fence will be paid for at the Contract unit prices for Item 618, Seeding, and Item 619, Mulch.

Payment will be made under:

Pay Item		Pay Unit
656.50	Baled Hay, in place	Each
656.60	Temporary Berms	Linear Foot
656.62	Temporary Slope Drains	Linear Foot
656.632	30” Temporary Silt Fence	Linear Foot

SPECIAL PROVISION

SECTION 668

TOLL BOOTH DUTCH DOOR INSTALLATION

668.01 Description

This work shall consist of re-installing Dutch Doors on the toll booths at Interchange 32 and Interchange 36 in accordance with these Specifications, and as approved by the Resident Engineer.

668.02 Materials

The materials shall meet the following requirements:

Dutch Doors will be supplied by the MTA. The Contractor shall transport them from the Authority's Cumberland Maintenance Facility Mile 58.3 northbound to the designated interchanges. All necessary hardware to reinstall the Dutch Doors shall be supplied by the Contractor.

The Dutch Doors are specific to each plaza; there are 4 doors needed for Interchange 32 and 5 doors needed for Interchange 36.

668.04 Method of Measurement

Dutch door installation will be measured by each unit, installed and accepted.

668.05 Basis of Payment

Dutch door installation will be paid for at the Contract unit price each which payment shall be full compensation for the installation of Dutch doors and all other materials, labor, tools, equipment and incidentals necessary to complete the work.

Payment will be made under:

Pay Item		Pay Unit
668.011	Dutch Door Installation	Each

SPECIAL PROVISION

SECTION 668

TOLL BOOTH REPAIR

668.01 Description

This work shall consist of toll booth repairs at Interchange 32 and Interchange 36 in accordance with the plans and these Specifications, and as approved by the Resident Engineer. The work to repair toll booths includes, but is not necessarily limited to:

- Dutch door angle replacement
- Window replacement (if needed)
- Window sill replacement
- Granite curb joint repair
- Booth masonry repair
- Booth metal flashing (between windows and booth masonry) repair
- Any need welding for metal repair
- Resealing booth windows
- All needed interior plywood repair and replacement
- Sliding door repair (if needed)
- Sliding door threshold repair and replacement (if needed)

668.02 Materials

The materials shall meet the requirements specified in the plan notes and details.

668.04 Method of Measurement

Toll Booth Repair will be measured by Contract Lump Sum, installed and accepted.

668.05 Basis of Payment

Payment will be made for work completed and accepted for Tool Booth Repair at the Contract Lump Sum price. All labor, materials, equipment, and submittals required, unless otherwise stated, will be incidental to this item.

Payment will be made under:

Pay Item		Pay Unit
668.012	Toll Booth Repair	Each

SPECIAL PROVISION

SECTION 673

STORMWATER FILTER SYSTEM

(Stormwater Soil Filter Bed)

673.01 Description

This work shall consist of constructing a stormwater soil filter bed (USF Detention Basins) to treat stormwater runoff from the northbound on-ramp. All work shall be done in accordance with these Specifications and as shown on the Plans, to provide a complete and operating system, and as approved by the Resident.

673.02 Materials

The filter material shall be a thoroughly blended mixture of the following:

a. Sand shall constitute 50-55 percent by volume of the filter material. Sand shall meet Subsection 703.01, Fine Aggregate for Concrete, except no more than two percent % by weight shall pass the # 200 sieve.

b. Loam shall constitute 20-30 percent by volume of the filter material. Loam shall be a loamy sand with a clay content between 15-25 percent by weight passing the # 200 sieve.

c. Mulch shall constitute 20-30 percent by volume of the filter material. Mulch shall be a moderately fine shredded bark mulch or wood fiber mulch with less than five percent by weight passing the #200 sieve.

d. The Contractor may seek approval from the Resident to use filter material from offsite as provided by a supplier that specializes in providing filter material that complies with the above Specifications and DEP requirements for Stormwater Filters.

673.03 Mixing and Placement

The above materials shall be thoroughly mixed to create a uniform mixture. The stormwater filter material shall be mixed before placement over the top of the underdrain bedding.

The stormwater filter material shall be placed using small equipment (small excavators, small trucks) to distribute the mixed soil material over the top of the underdrain bedding. To preserve filtration characteristics of the material, the stormwater filter material shall not be compacted. Natural compaction over time is preferred over intentional compaction methods. Light compaction due to operation of small equipment operating over the surface of the media to spread the material is acceptable. Such equipment operations shall be minimized to limit compaction. The stormwater filter material shall be graded and leveled to the elevations shown

on the Plans and, if required, additional filter material shall be added to fill any depressions or natural settlements that occur prior to acceptance of the work.

673.04 Method of Measurement

The Stormwater soil filter bed will be measured by the number of cubic yards computed using the dimension shown on the Plans for the soil filter bed.

673.054 Basis of Payment

The accepted quantity of stormwater soil filter bed will be paid for at the Contract unit price per cubic yard. Payment shall be full compensation for obtaining the filter bed material, excavating, loading, hauling, mixing, placing, grading, and compacting, and all other materials, tools and labor incidental to the work.

The excavation for the filter bed will not be measured separately for payment, but shall be included for payment under Item 203.20, Common Excavation.

The underdrain for the filter bed will not be measured separately for payment, but shall be included for payment under Item 605.016, 6 Inch PVC Underdrain, and Item 605.018, 8 Inch PVC Underdrain.

The underdrain Type B bedding for the filter bed will not be measured separately for payment, but shall be paid for under Item 605.09, Underdrain Type B Bedding.

The drainage geotextile for the filter bed will not be measured separately for payment, but shall be included for payment under Item 620.56, Drainage Geotextile.

The Temporary Concrete Barrier Type I - Supplied by Authority will not be measured separately for payment, but shall be included for payment under Item 526.307, Temporary Concrete Barrier Type I - Supplied by Authority.

Payment will be made under:

Pay Item		Pay Unit
673.01	Stormwater Soil Filter Bed	Cubic Yard

SPECIAL PROVISION

SECTION 719

SIGNING MATERIAL

Delete Section 719.01 Reflective Sheeting and replace with the following:

Section 719.01 Reflective Sheeting

All Reflective Sheeting shall be manufactured by 3M.

Reflective sheeting for all signs shall meet at a minimum the requirements for, ASTM 4956 – Type XI (Full cubed).

Reflective sheeting, used in sign construction, shall have been manufactured within the six months immediately prior to the fabrication of each sign. Upon delivery at the job site of each shipment of signs, a letter of certification shall be provided that the reflective sheeting conforms to the requirements.

For Type 1 Guide Signs, all reflective sheeting shall be color matched on each sign unit.

All warning signs shall be fluorescent yellow except for Ramp Advisory Speed signs which shall be yellow. Yellow on Type 1 Guide Signs shall be Yellow.

All Construction Series signs shall be fluorescent orange.

All Pedestrian Signs shall be fluorescent yellow-green.

EZ-PASS Purple shall conform to the FHWA Purple color block.

Delete Section 719.02 Demountable High Intensity Reflectorized Letters, Numerals, Symbols, and Borders and replace with the following:

719.02 Direct Applied Reflectorized Letters, Numerals, Symbols, and Borders Direct Applied reflectorized letters, numerals, symbols and borders shall consist of cut out sheeting shall meet at a minimum the requirements for ASTM 4956 – Type XI sheeting.

All Type 1 Guide Signs shall meet at a minimum the requirements for ASTM 4956 –Type XI(Full Cubed) sheeting.

SPECIAL PROVISIONS

DIVISION 800

BUILDING AND STRUCTURES

(Canopy Raising – Interchange 32)

800.01 Description

The work shall consist of all work necessary to raise the existing canopy at Interchange 32 to match the underside elevation of the adjacent new canopy over the new Lane 7. The work to raise the existing canopy includes, but is not necessarily limited to:

- Removing existing lead based paint impacted by the work
- Temporary re-routing, extensions, temporary connections, final routing and final connections of all electrical and communication cables and conduits (canopy lights; lane use signals; canopy sign lights; antenna cables; toll equipment)
- Temporary relocation, temporary connections, final relocation and final connections of toll equipment
- Temporary re-routing, extensions, temporary connections, final routing, extensions, and final connections of the plaza lightning suppression system
- Temporary removal, stacking, and re-installation of the canopy signs and sign supports
- Temporary re-routing, extensions, temporary connections, final routing and final connections of the existing canopy roof drain system
- Installation of a temporary jacking, shoring, or hoisting system; and the associated bracing, jacking or hoisting the existing canopy
- Installation of the permanent canopy column extensions
- Removal of the temporary jacking, shoring, or hoisting system; and the associated bracing
- Coating of all steel and connections, including temporary connections and holes impacted by the work
- Maintenance and protection of Turnpike employees, Turnpike property, Turnpike traffic and Turnpike patrons
-

The existing canopy support columns are currently and will continue to be used as wire raceways. The contractor will need to verify what will be needed for re-routing the wiring, conduit and toll equipment in order to raise the canopy. In the temporary and final conditions, electrical and communications wire can be splices in junction boxes to provide needed additional length, with the exception of the AVI antenna cables (LMR 400 Cable), which cannot be spliced. All electrical items needed to re-route power and communication and relocate toll equipment will be incidental to the canopy raising.

The contractor shall submit an electrical, communication and toll equipment re-routing plan for review and approval. All electrical, communication and toll equipment in each lane shall remain operational for the AM and PM peak hours. The contractor shall have all lanes operations from 5:00AM to 8:00 PM Monday through Friday unless otherwise approved by the MTA. All requests for temporary lane closures shall follow Special Provision 652 of this contract. Weekend closures will only be allowed on a case by case basis with MTA approval and no holiday closures

will be allowed. The contractor shall have limited periods of time in order to the conduct the re-routing operations, and shall plan these operations accordingly, night work will be allowed for these operations. For the relocation of toll equipment in the temporary condition, all equipment and support members shall be NO LESS THAN 14 feet above roadway surface.

Canopy jacking will be as per Special Provision 524 and the contractor shall submit a jacking plan for review and approval. At the contractor's option the existing canopy signs and sign supports may remain in place during the canopy raising. Should the contractor opt to keep the existing canopy signs and sign supports in place during the canopy raising operation the contractor shall account for the dead and live loads on the canopy signs in the canopy jacking plan.

Prior to installing the connection plates for each column, all lead paint shall be removed in a one foot area above and below the area where the connection plates will be installed in each column. Lead paint removal shall be as outlined in Special Provision 105.2.4.2. The contractor shall also remove the lead based paint in all areas where the contractor proposed to mechanically fasten or weld temporary structural supports or bracing to the existing structure.

The contractor shall submit a bracing and support plan for installing the connection plates, each individual column shall be braced and supported prior to cutting the columns. The columns shall be cut level. The cuts shall be made with a band saw, reciprocating saw, or circular saw mounted abrasive cutting wheel. Gasoline powered abrasive cut off saws or cutting torches will not be permitted. The columns shall remain plumb and square through the cutting and connection plate installation process. Any variation in the trueness of the column shall be brought to the Resident Engineer' attention, and will be fixed prior to column extension installation at the contractors expense.

The structural steel column inserts shall be shop coated as per Special Provision 506 and shall be incidental to the canopy raising item. All field painting of the remaining column steel shall be painted under item 506.14 - Field Painting of Existing Steel.

800.02 Method of Measurement

Raising Canopy - Interchange 32 will be measured for payment as one lump sum unit, complete, and accepted.

Removing existing lead based paint impacted by the work; and coating of all steel and connections, including temporary connections and holes impacted by the work will not be measured separately, but shall be incidental to the lump sum pay item.

The re-routing, extensions, and reconnection of all electrical and communication cables and conduits (canopy ceiling lights; lane use signals; canopy sign lights; antenna cables; toll equipment) required to raise the canopy will not be measured separately, but shall be incidental to the lump sum pay item.

Temporary relocation and temporary connections, as well as relocation and connection in the final location, of toll equipment required to raise the canopy will not be measured separately, but shall be incidental to the lump sum pay item.

Temporary re-routing, extensions, and temporary connections of the plaza lightning suppression system required to raise the canopy will not be measured separately, but shall be incidental to the lump sum pay item.

Final routing, extensions, and final connections of the plaza lightning suppression system will be paid under Items 655.80.

Temporary removal, stacking, and re-installation of the canopy signs and sign supports required to raise the canopy will not be measured separately, but shall be incidental to the lump sum pay item.

Temporary re-routing, extensions, temporary connections, final routing and final connections of the existing canopy roof drain system required to raise the canopy will not be measured separately, but shall be incidental to the lump sum pay item.

Installation and removal of a temporary jacking, shoring, or hoisting system; and the associated bracing will not be measured separately, but shall be incidental to the lump sum pay item.

Furnishing and installing the permanent canopy column extensions will not be measured separately, but shall be incidental to the lump sum pay item.

Maintenance of Traffic and protection of Turnpike employees, Turnpike property, Turnpike traffic and patrons will not be measured separately, but shall be incidental to the lump sum pay item.

800.03 Basis of Payment

Payment will be made for work completed and accepted for Raising Canopy - Interchange 32 at the Contract Lump Sum price. All labor, materials, equipment, and submittals required, unless otherwise stated, will be incidental to this item.

Payment will be made under:

Pay Item		Pay Unit
800.101	Raising Canopy - Interchange 32	Lump Sum

SPECIAL PROVISIONS

DIVISION 800

BUILDING AND STRUCTURES

(Manhole Removal & Electrical/Mechanical Pit Rehab)

800.01 Description

The work shall consist of furnishing and installing materials and components as needed to remove the manhole and rehabilitate the existing booth pit under the exit lanes at Interchange 36:

During Construction Phase 2: The Contractor shall remove the all components of the manhole, remove the portion of top of pit wall to the bottom of new slab, that is accessible during the phase, and do all needed mechanical and electrical rehabilitation needed. This will include running additional conduit from the area adjacent to the building through the pit and into the Lane 3 pit. The pit shall be backfilled with sand to the bottom of new roadway slab.

During Construction Phase 3: The Contactor shall complete the work started in phase 2.

800.02 Method of Measurement

The Manhole Removal & Electrical/Mechanical Pit Rehab will be measured for payment as one lump sum unit, complete, and accepted.

800.03 Basis of Payment

Payment will be made for work completed and accepted for Manhole Removal & Electrical/Mechanical Pit Rehab at the Contract Lump Sum price. All labor and materials required will be incidental to this item. All conduit, junction boxes and concrete will be paid separately at contract unit prices.

Payment will be made under:

Pay Item		Pay Unit
800.201	Manhole Removal & Electrical/Mechanical Pit Rehab	Lump Sum

SPECIAL PROVISIONS

DIVISION 800

BUILDING AND STRUCTURES

(New Toll Booths and Canopy – Interchange 32 and 46)

800.01 Description

Division 800 specifies materials, procedures and requirements for the construction of the Toll Facilities, comprised of: toll booths and canopies and all associated utilities and services within the limits shown on the Drawings. The work shall be phased as noted on the Plans and outlined in the Specification.

Toll Booth and Canopy construction includes, but is not limited to the following:

1. Pick up, transport and installation of two (2) toll booths complete with subframes, floors, doors, windows, counters, etc. Caulking and sealing of booths to concrete is part of the installation. The toll booth shall be installed after all island concrete has been placed.

2. Fabrication and erection of toll canopy structure complete, including decking, roofing, steel columns, fascia, drain lines, and horizontal canopy sign supports, etc.

3. For Interchange 46, the MTA will supply salvaged canopy fascia and suspended ceiling for contractor installation. The contractor shall transport the material from the MTA Cumberland Maintenance Facility for installation. All needed hardware and fastener material for installing the MTA provide material will be provided by the contactor and incidental to canopy item.

4. EPDM Roofing System Installation: The installation of the new canopy roof will included EPDM roofing material.

5. Furnishing and installing plumbing, heating, ventilating, communications and electrical work in the toll booths and canopy as detailed on the Plans.

6. Furnishing and installing one fixed canopy sign supports, relocating one fixed canopy sign support and sign and relocating sign lights. Canopy signs and the installation thereof are part of the work of Division 800.

7. Installation of reset canopy mounted lights for the new Lanes at Interchange 32 and 46 shall be provided by others and picked up the at the MTA Cumberland Maintenance Facility.

8. Cutting, patching and sealing as required to complete the work per Plans and Specifications.

9. The Contractor shall submit a cost breakdown of the major components of work for the Toll Booths and Canopy to be approved by the Engineer. This breakdown will be used as a basis for the monthly pay estimates.

All material associated with Toll Booths and Canopy installation is included in this item and is shown on the Plan drawings and described in this Special Provision.

800.02 Method of Measurement

The Toll Booths and Canopy construction will be measured for payment by the lump sum, complete, in-place for the Toll Booths and Canopy.

The MTA will supply the toll booth for installation at Interchange 32 and 46. The contractor shall transport toll booths from Authority's Sign Shop Facility Mile 58.3 northbound. The installation will include all electrical, mechanical and toll systems required as described in the Plans and within this specification, and all labor, material and equipment needed to provide a fully functioning toll booth will be incidental to this item.

The contractor shall install a new canopy over Lane 7 at interchange 32 and Lane 9 at interchange 46 as shown in the plan drawings and described within these specifications. The canopy installation shall include shop painted structural steel, EPDM roofing system, and all electrical and toll systems remounted or re-routed, reinstallation of canopy sign support and canopy signs and all material labor and equipment needed to provide the completed canopy.

All material associated with canopy installation is included in this item and is shown on the Plan drawings and described in this Special Provision. All canopy drain and toll booth pit drain installations shown in the plan set, to include material, labor and equipment, will be incidental to this item. Electrical and communication items associated with the toll system will be paid for under the specific item.

800.03 Basis of Payment

Toll Booths and Canopy will be paid for at the lump sum price bid which shall be full compensation for the cost of furnishing all materials, equipment, supplies, tools, incidentals, and labor and supervision necessary to satisfactorily complete all work prescribed in Division 800 of these Special Provisions.

Payment will be made under:

Pay Item		Pay Unit
800.501	New Toll Booths and Canopy– Interchange 32 and 46	Lump Sum

SPECIAL PROVISION

SECTION 800

BUILDING AND STRUCTURES

(Canopy Roof Replacement – Interchange 32 and 36)

800.61 Description

This work shall consist of removal and disposal of the existing canopy roof at Interchange 32 and 36, as well as furnishing and installing a new EPDM roofing system as well as all flashing, fascia and any other roofing related systems described in these special provisions as required for the construction of a new canopy EPDM roof system.

800.62 Construction Requirements

The work in this item generally includes, but is not limited to demolition of the existing roofing system and replacement with a new EPDM roofing system:

a. Asbestos: The existing roofing system contains asbestos and shall be abated as per Special Provision Section 202 - Removing Asbestos Containing Materials. Asbestos abatement will be paid under item 202.071.

b. Demolition of Existing Roof: All time restriction for lane closures applying to Interchange 32 and 36 will apply the roof replacement operation. The Contractor may not dispose of demolition roof material within the project limits. All materials shall become the property of the Contractor and shall be removed from the site at the completion of the Project. The Contractor shall provide the Resident with an affidavit stating the final location of all disposed material and that the material was disposed of in accordance with the Maine Department of Environmental Protection Solid Waste Regulations.

c. EPDM Roofing System Installation: The installation of the new canopy roof at Interchange 32 and 36 will comply with section 07530 of this Special Provision.

800.63 Basis of Payment

Payment for canopy roof replacement at Interchange 32 and 36 will be made as lump sum. All labor, materials and equipment required will be incidental to this item.

Payment will be made under:

Pay Item		Pay Unit
800.601	Canopy Roof Replacement – Interchange 32 and 36	Lump Sum

SPECIAL PROVISIONS

DIVISION 800

BUILDING AND STRUCTURES

(New Canopy Sign Installation - Interchange 46 & 47)

800.01 Description

The work shall consist of furnishing and installing materials and components as needed to remove canopy fascia mounted signs at Interchange 46 & 47 and install galvanized canopy mounted sign rail, galvanized mounting hardware, static canopy signs and light as per the plans and this specification. All shop coating of steel will be as per special provision 506.

800.02 Method of Measurement

The New Canopy Sign Installation - Interchange 46 & 47 will be measured for payment as one lump sum unit, complete, and accepted.

800.03 Basis of Payment

Payment will be made for work completed and accepted for New Canopy Sign Installation - Interchange 46 & 47 at the Contract Lump Sum price. All labor and materials required will be incidental to this item. All conduit and junction boxes will be paid separately at contract unit prices.

Payment will be made under:

Pay Item		Pay Unit
800.701	New Canopy Sign Installation - Interchange 46 & 47	Lump Sum

SPECIAL PROVISIONS

DIVISION 800

BUILDING AND STRUCTURES

(Overhead Lane Use Sign Installation)

800.01 Description

The work shall consist of furnishing and installing materials and components as needed to relocate overhead lane use signs on new span wire at Interchange 32 as per the plans and this specification. The work will also include the installation of one new wooden strain pole with guy wire, as well as top and bottom span wire, and all need hardware as per Standard Specification 643. The lane use signs will be paid for under item 645.271. All existing signs, span wire, strain pole and hardware will be the property of the contractor and disposed of properly.

800.02 Method of Measurement

The Overhead Lane Use Sign installation will be measured for payment as one lump sum unit, complete, and accepted.

800.03 Basis of Payment

Payment will be made for work completed and accepted for Overhead Lane Use Sign at the Contract Lump Sum price.

Payment will be made under:

Pay Item		Pay Unit
800.801	Overhead Lane Use Sign Installation	Lump Sum

SPECIAL PROVISION

SECTION 800

BUILDING AND STRUCTURES

TABLE OF CONTENTS

The specifications sections listed below, and all State of Maine Department of Transportation "Standard Specifications for Highways and Bridges" referenced therein, comprise Division 800:

1- GENERAL REQUIREMENTS

01000	General	01000-1

3- CONCRETE

03300	Concrete Work	03300-1

5- METALS

05120	Structural Steel	05120-1
05300	Metal Decking	05300-1 to 3
05500	Metal Fabrications	05500-1 to 9

7 - THERMAL AND MOISTURE PROTECTION

07530	Single Ply Membrane Roofing and Flashing	07530-1 to 9

SECTION 0100

GENERAL

All personnel used for this work shall be experienced in the work and materials being installed.

Prior to the start of work, submit a schedule of the activities to be undertaken along with the MSDS sheets of all products to be used at the toll plaza. The Contractor's supervisor shall be available daily to update the toll supervisor as to the schedule/impact on plaza operations and to resolve any issues that might arise. The Contractor's supervisor shall have a cell phone so that the Owner or Resident can make contact at any time during the work day.

Erect and maintain rigid opaque screens along each side, parallel to the travel lanes, (minimum 8 foot high and extending 10 feet beyond the transverse limit of the work on each end), adjacent to entering lanes (entering and exiting lanes), to provide visual screening of the work and contain the dust and fumes generated in the lane being worked. The screens shall be erected prior to the start of the work.

Temporary doors and screens shall be provided to access adjacent lanes and to prevent dust from entering adjacent lanes and toll booths. The Contractor shall provide temporary ventilation to control dust. The Contractor is advised that the toll equipment is sensitive to dust and debris.

Work areas and hazards in the toll plaza shall be clearly marked. Cleanup in the toll plaza area shall be continuous to ensure a clean safe environment for Turnpike employees and other Contractors.

Payment for work in this Section will not be paid for separately, but shall be considered incidental to Pay Items 800.501, New Toll Booth and Canopy - Interchange 32 and 46, and 800.601, Canopy Roof Replacement – Interchange 32 and 36.

SECTION 03300

CONCRETE WORK

PART 1 - GENERAL

1.1 RELATED DOCUMENTS

A. Examine Drawings, Contract Conditions all other Sections of the Specifications for requirements which affect work of this Section whether or not such work is specifically mentioned in this Section.

B. Coordinate work with that of all other trades affecting, or affected by work of this Section. Cooperate with such trades to assure the steady progress of all Project work.

1.2 DESCRIPTION

The work of this section includes furnishing all materials, equipment, labor and supervision, and performing all operations required for all concrete work associated with the Interchange reconstruction, including all related work such as furnish and installing granite curb, furnish and install reinforcing steel, etc.

PART 2 - MATERIALS

2.1 All materials used in the work shall be in accordance with the requirements of the State of Maine Department of Transportation "Standard Specifications for Highways and Bridges", Sections 502 and 503.

PART 3- EXECUTION

3.1 All work shall be performed in accordance with the requirements of State of Maine Department of Transportation "Standard Specifications for Highways and Bridges", Sections 502 and 503.

END OF SECTION

SECTION 05120

STRUCTURAL STEEL

PART 1 – GENERAL

1.1 RELATED DOCUMENTS:

A. Conditions of the Contract and other technical specifications apply to the work specified in this Section, insofar as applicable.

B. Coordinate work with that of all other trades affecting, or affected by work of this Section. Cooperate with such trades to assure the steady progress of all Project work.

1.2 DESCRIPTION:

The work of this section includes furnishing all materials , supplies, equipment, labor and supervision, and performing all operations required to detail, fabricate, paint, and install structural steel for all canopy and gantry work, including all related items such as bolts, nuts, washers, etc.

PART 2- MATERIALS

2.1 All materials used in the work shall be in accordance with the requirements of the State of Maine Department of Transportation "Standard Specifications for Highways and Bridges", Sections 504 and 506.

2.2 Steel shall be surface prepared, primed painted, and finish painted in accordance with Special Provision 708.

PART 3 -EXECUTION

3.1 All work shall be performed in accordance with the requirements of the State of Maine: Department of Transportation "Standard Specifications for Highways and Bridge - Section 504 and Special Provision 506. Surface preparation and painting of steel shall be performed in accordance with the requirements of Special Provision 708 and all applicable provisions of Special Provision 506. Where there is a conflict between the referenced painting specifications, the more conservative, restrictive or superior provision, as determined solely by the Engineer, shall apply.

Painting: Only the prime coat (and any field touch-up of prime coat) shall be applied as part of the work under this section. Intermediate and finish coats shall be shop applied as part of the work of Special Provision 506.

END OF SECTION

SECTION 05300

METAL DECKING

PART 1 - GENERAL

1.1 RELATED DOCUMENTS

A. Examine Drawings, Contract Conditions all other Sections of the Specifications for requirements which affect work of this Section whether or not such work is specifically mentioned in this Section.

B. Coordinate work with that of all other trades affecting, or affected by work of this Section. Cooperate with such trades to assure the steady progress of all Project work.

1.2 DESCRIPTION

Furnish all materials, equipment, tools, supplies, labor and supervision, and perform all work necessary for providing metal decking and accessories as shown on the Drawings, as specified herein, and as is additionally necessary to properly complete the work, unless otherwise definitely excluded.

1.3 REFERENCE STANDARDS:

A. Except as modified by the requirements specified herein and/or the details on the Drawings, all work shall conform to the applicable provisions of the following codes and standards:

1. ASTM-Specifications and standards referred to herein, latest edition.

2. AISI-Light Gauge Cold-formed Steel Design Manual.

3. AWS-Structural Welding Code.

4. SDI-All relevant portions of the design manual.

1.4 SUBMITTALS

A. Submit shop drawings in accordance with Contract requirements, showing complete details of typical and special units; means for fastening together as well as to supporting construction, including all weld details (type, size, spacing, etc.); and erection plans showing a complete layout of the work, including end and side laps, closure plates, fittings, etc.

B. Submit engineering calculations substantiating the section properties prior to fabrication.

1.5 DELIVERY AND STORAGE

Schedule steel deck delivery to the jobsite as required for erection. If deck must be stored at the site, store in bundles off the ground on substantial timbers, with one end elevated to provide drainage, and protect with waterproof materials.

1.6 PROTECTION

Protect installed deck from excessive traffic, dirt and debris prior to the installation of the roofing.

PART 2 - MATERIALS

2.1 MATERIALS

A. Materials and fabricated members shall conform to SDI "Recommended Standard Practice" and "Basic Design Specifications", contained in the "Steel Deck Institute Design Manual for Composite Decks, Form Decks and Roof Decks".

B. Deck material shall be high tensile strength galvanized steel conforming to ASTM A 446, Grade A zinc-coated in accordance with ASTM A 525, G60.

C. Accessory metal sections such as end angle bearing stiffeners, closure plates, and other miscellaneous accessories indicated on the drawings or required to provide a complete installation, shall be two gauge numbers heavier than the gauge of the metal decking, of the same material and finish, and designed especially for the decking being used.

D. Flat Closures: Not less than 8 inches wide, lapped 4 inches on each side. Angle bent edge strips shall be 6 inches wide with 3 inch laps on the flat and vertical legs.

E. Welding Washers: 16 gauge.

F. Welding Rods: 1/8 inch Series E 60 electrodes.

2.2 FABRICATION

A. Fabricate decking at the shop in accordance with the approved shop drawings to fit the conditions and supporting members shown. Where possible, decking shall bear on three supports.

B. The metal deck shall be as manufactured by Epic, Vulcraft, United Steel Deck, or approved equal.

PART 3- EXECUTION

3.1 ERECTION

A. Erect and weld the deck using only experienced, skilled workmen in accordance with the manufacturer’s approved specifications and shop drawings, and as additionally specified herein.

B. Prior to erection, verify that all bearing plates are in proper alignment and that their surfaces are clean for welding.

C. All welds shall be fusion types not less than 1/2 inch diameter. Use welding washers on all welds. Show details of all welds on the shop drawings and conform to the manufacturer's system approval. Burn holes through the metal deck or supporting members will cause rejection of the deck.

D. Cut and reinforce the deck as required at all openings for the work of other trades.

E. Carefully align ribs perpendicular to supports before welding in place. Lap ends a minimum of 2 inches, always over supports. Deck side laps shall be one half corrugation. Weld to supports using welding washers immediately after alignment.

F. After erection of the deck, clean all scars, abrasions, weld areas, etc., on both top and underside surfaces and apply an approved galvanizing touch-up compound in accordance with the manufacturer's instructions.

3.2 CLEANING

The surface and channels of the metal decking shall be clean, free from dirt and debris, and in a proper condition to receive the roofing.

END OF SECTION

SECTION 05500

METAL FABRICATIONS

PART 1 - GENERAL

1.1 RELATED DOCUMENTS

A. Examine Drawings, Contract Conditions all other Sections of the Specifications for requirements which affect work of this Section whether or not such work is specifically mentioned in this Section.

B. Coordinate work with that of all other trades affecting, or affected by work of this Section. Cooperate with such trades to assure the steady progress of all Project work.

1.2 DESCRIPTION

A. The work includes furnishing all materials, equipment, labor, supervision, design and drafting services, and fabricating, painting and performing all operations necessary to complete the metal fabrication work as shown on the Drawings, as specified herein, and as is additionally required to properly complete the work. Metal fabrication includes items made from iron, steel and aluminum shapes, plates, bars, strips, tubes, pipes and castings which are not specified elsewhere.

B. Without in any way limiting the scope of work, the following major items are mentioned:

1. Various anchors for installing /setting in concrete and masonry.

2. Shop painting of all ferrous items unless otherwise specified.

1.3 QUALITY ASSURANCE

A. Codes and Standards: Comply with provisions of the following (latest edition including all amendments), except as otherwise indicated:

The State Maine Building Code.

AISC "Code of Standard Practice for Steel Buildings and Bridges".

AWS D 1.1 "Structural Welding Code".

ASCE-7 "Minimum Design Loads for Buildings and Other Structures".

NAAMM "Standard Specifications for Metal Bar Grating and Metal Bar Grating Treads" and "Metal Bar Grating Manual".

B. Qualifications for Welding Work: Qualify welding processes and welding operators in accordance with AWS "Standard Qualification Procedure". Provide certification that

welders to be employed in work have satisfactorily passed AWS qualification tests.

C. Field Measurements: Where possible, take field measurements prior to preparation of shop drawings and fabrication. Do not delay job progress; allow for field trimming and fitting where taking field measurements before fabrication might delay work.

D. Shop Prefabrication/Assembly: Prefabricate/preassemble items in shop to greatest extent possible to minimize field splicing and assembly. Disassemble units only as necessary for shipping and handling limitations. Clearly mark units for reassembly and coordinated installation.

E. The work specified under this Section shall be performed by firms that have been engaged in the satisfactory manufacture and fabrication of work of the same type and magnitude as specified herein for a period of at least five years.

1.4 SUBMITTALS

A. Product Data: Submit seven (7) copies of manufacturers' specifications, anchorage/ installation details and installation instructions for products to be used in miscellaneous metal fabrications, including paint and grout products.

B. Shop Drawings: Submit shop drawings for fabrication and erection of miscellaneous metal fabrications. Include plans, elevations, and details of sections and connections. Show anchorage and accessory items. Provide templates for anchor bolts, etc., to be installed by others.

Where materials or fabrications are indicated to comply with certain requirements for design loadings, include structural computations, material properties, and other information needed for structural analysis.

Any discrepancies in the Engineer's Drawings shall be brought to the attention of the Engineer for adjustment. The Contractor shall verify field dimensions with those dimensions given on the Engineer's Drawings, and obtain by measurement at the site all necessary dimensions and levels dependent on construction in-place.

Prior to submission of the shop drawings to the Engineer, they shall be pre-checked by the Contractor for conformity of detail with the Contract Documents and site conditions, and shall be coordinated with other work on the Project as necessary. The signature of a representative of the Contractor indicating that the shop drawings have been pre-checked will be required. The Contractor shall be wholly responsible for the conformity of dimensions and details of the shop drawings with the Contract Documents and site conditions.

After receipt of the shop drawings by the Engineer, they will be reviewed and necessary revisions will be marked on the sepias which will be returned to the Contractor. Revisions shall then be made and the shop drawings resubmitted. This procedure will be continued until the shop drawings are released for construction. The Contractor shall then deliver to the Engineer one transparency and three prints for his record and the use of his personnel.

At least one copy of each released shop drawing shall be kept available in the Contractor's field office; shop drawings not bearing evidence of release for construction by the Engineer shall not be kept on the job.

C. Samples: Submit 2 sets of representative samples of materials and finished products. Also include a sample weld connection.

D. Design Calculations: The Contractor shall provide written verification that a registered engineer in the State of Maine has designed connections to supporting structures, and all other structurally related items.

1.5 DELIVERY AND STORAGE

A. Upon delivery to the jobsite or storage site, the miscellaneous metal fabrications shall be carefully unloaded and stacked at least 1 foot above the ground in such a manner as to provide ready surface drainage and adequate air circulation. All members exhibiting defective coatings, scars, abrasions , poor surface preparation, etc., shall be remedied by the Contractor to the satisfaction of the Engineer prior to placing items in storage or, if in the Engineer's opinion, such damaged items cannot be satisfactorily repaired, said items shall be promptly removed from the site and replaced with new items meeting the Engineer's satisfaction.

B. Deliver items to the site in a sequence that will allow the work to proceed without delay but will avoid long term storage of items at the site.

PART 2 - MATERIALS

2.1 MATERIALS

A. Metal Surfaces: For fabrication of miscellaneous metal work which will be exposed to view, use only materials which are smooth and free of surface blemishes, including pitting, seam marks, roller marks, rolled trade names and roughness.

B. Steel Plates, Shapes and Bars: ASTM A36.

C. Aluminum: All structural extrusions shall be 6063-T6; all other extrusions shall be 6063-T5.

D. Expansion Bolts: Stainless steel "Kwik Bolts" as manufactured by Hilti Fastening Systems or approved equal.

E. Non-Shrink, Non-Metallic Grout: Pre-mixed, factory-packaged, non-staining, non-corrosive, non-gaseous grout complying with CRD-C621. Provide grout specifically recommended by manufacturer for interior and exterior applications required.

F. Welding Rods: Conform to AWS Specification AWS D 1.1.

G. Fasteners: Provide hot-dipped galvanized or stainless steel fasteners for exterior use and

where built into exterior walls. Select fasteners from the following listing which are of the type, grade and class required. Only non-magnetic stainless steel fasteners and washers shall be used where the fastener or washer will be in contact with aluminum.

Bolts and Nuts: Regular hexagon head type, ASTM A307, Grade A or A325, as applicable.

Anchor Bolts: ASTM A 307.

Lag Bolts: Square head type, FS FF-B-561.t

Machine Screws: Cadmium plated steel, FS FF-S-92.

Wood Screws: Flat head carbon steel, FS FF-S-111.

Plain Washers: Round, carbon steel, FS FF-W-92.

Toggle Bolts: Tumble-wing type, FS FF-B-588, type, class and style as required.

Lock Washers: Helical spring type carbon steel, FS FF-W-84.

H. Paint:

Metal Primer Paint: Except as otherwise noted, apply the following Tnemec primer, or approved equal by PPG, Devoe or DuPont to all non-galvanized ferrous surfaces.

Tnemec Series 10-99 Modified Alkyd Rust Inhibitive Primer, 3 dry mils, spray applied.

I. Galvanizing Repair Paint: High zinc dust content paint for re-galvanizing welds and abrasions in galvanized steel, complying with Military Specifications MIL-P-21035 (Ships).

2.2 FABRICATION

A. Workmanship:

Use materials of size and thickness indicated or, if not indicated, as required to produce strength and durability in finished products for the use intended, using proven and acceptable details of fabrication and support.

Form exposed work true to line and level with accurate angles and surfaces and straight sharp edges. Ease exposed edges to a radius of approximately 1/32 inch unless otherwise shown. Form bent-metal corners to smallest radius possible without causing grain separation or otherwise impairing work.

Weld corners and seams continuously, complying with AWS recommendations. At exposed connections, grind exposed welds smooth and flush to match and blend with adjoining surfaces.

Provide for anchorage of type shown, coordinated with supporting structure. Fabricate and space anchoring devices to provide adequate support for intended use.

All holes indicated on the Drawings necessary for the installation of anchors shall be made as part of the work of this Section. No holes other than as indicated on the Drawings shall be drilled, punched or cut without the approval of the Engineer. Holes shall not be made by burning.

Material and workmanship shall at all times be subject to the approval of the Engineer.

Thickness of metal and details of assembly and anchors shall provide ample strength and stiffness with anchors concealed where possible. Provide waterproof joints where metal is exposed to the weather. Provide holes and connections for the work of other trades.

B. Codes and Regulations:

All fabrications intended for personnel walking, climbing, guarding and working surfaces and the installation thereof, shall meet the requirements of the Department of Labor Occupational Safety and Health Standards and all State and local codes. In the event of conflicting requirements, the more stringent or conservative shall apply. All such work shall be stamped by a Professional Engineer registered in the State of Maine.

C. Galvanizing :

Provide a zinc coating for those items shown or specified to be galvanized, as follows:
ASTM A153 for hot-dip galvanized iron and steel hardware.

ASTM A123 for hot-dip galvanized iron and steel products.

D. Shop Painting:

Shop paint miscellaneous metal work, except surfaces and edges to be field welded or bolted, and galvanized surfaces, unless otherwise indicated. Shop paint the portions of embedded steel to be exposed, and for an additional 2 inches below the exposed portion. Surface preparation and painting shall be performed in accordance with all applicable requirements of Special Provision 506.

"Commercial Blast Clean" welded support fabrications for fasciae and soffits in accordance with Steel Structures Painting Council (SSPC) SP-6. For ferrous items, clean off heavy rust, loose mill scale, other deleterious materials in accordance SSPC SP-3 "Power Tool Cleaning".

Remove oil, grease and similar contaminants in accordance with SSPC SP-1 "Solvent Cleaning" prior to performing any other surface preparation procedures.

Immediately after surface preparation, spray on primer in accordance with manufacturer's instructions at a rate to provide a uniform dry film thickness of 3.0 dry mils. Use painting techniques which will result in full coverage of joints, corners, edges and all other surfaces.

Unless otherwise specifically indicated, apply one shop coat to all non-galvanized carbon steel fabricated items, except apply 2 coats of paint to surfaces inaccessible after assembly or erection. Change color of second coat to distinguish it from the first.

2.3 MISCELLANEOUS METAL FABRICATIONS

A. Rough Hardware:

Furnish conventional as well as bent or otherwise custom fabricated bolts, plates, anchors, hangers, dowels and other miscellaneous steel and iron shapes as required for framing, supporting, anchoring or securing items to concrete, masonry and other materials.

Fabricate items to sizes, shapes and dimensions required. Furnish steel washers for heads and nuts.

B. Miscellaneous Framing and Supports:

Provide miscellaneous steel framing and supports which are not specified elsewhere, as required to properly complete the work.

Fabricate miscellaneous units to sizes, shapes and profiles shown or, if not shown, of required dimensions to receive other work to be retained by framing. Fabricate from structural steel shapes, plates and bars of welded construction using mitered joints for field connections. Cut, drill and tap units as required. No burning of holes shall be allowed.

Hot dip galvanize all miscellaneous carbon steel frames, attachments, supports, etc., to be used in exterior applications and in exterior walls.

C. Brackets, Flanges, Fittings and Anchors:

Provide all types of brackets, closures, flanges, miscellaneous fittings and anchors which are not provided under other specification sections as necessary for the proper completion of the work.

Hot dip galvanize carbon steel members, fittings, brackets, fasteners, and other components for exterior applications and when used in and on exterior walls.

D. Loose Bearing Plates:

Provide loose bearing plates for steel items bearing on masonry or concrete construction, made flat, free from warps and twists, and of required thickness and bearing area. Drill plates to receive anchors and for grouting as required. Galvanize after fabrication.

PART 3- EXECUTION

3.1 PREPARATION

Coordinate and furnish anchorage's, setting drawings, diagrams, templates, instructions,

and directions for installation of anchorage's, such as concrete inserts, sleeves, anchor bolts and miscellaneous items having integral anchors which are to be embedded in concrete or masonry construction. Coordinate delivery of such items to work performed at the site.

3.2 INSTALLATION

A. Fastening to In-Place Construction: Provide anchorage devices and fasteners where necessary for securing miscellaneous metal fabrications to in-place construction; including expansion anchors, anchor bolts, toggle bolts, through-bolts, Jag bolts, wood screws and other connectors, as required. Only expansion anchors are to be used for attaching items to masonry. All fasteners for exterior construction shall be Type 304 or 316 stainless steel.

B. Cutting, Fitting and Placement: The Contractor shall perform all measuring, detailing, cutting, drilling and fitting required to install miscellaneous metal fabrications. Set work accurately in location, alignment and elevation, plumb, level, true and free of rack, measured from verified established lines and levels. Provide temporary bracing or anchors in formwork for items which are to be built into concrete, masonry or similar construction.

Fit exposed connections accurately together to form tight hairline joints. Field weld connections which cannot be shop welded because of shipping size limitations. Grind exposed joints smooth and touch-up shop paint coat and galvanizing. Do not weld, cut or abrade the surfaces of exterior units which have been hot-dip galvanized after fabrication and are intended for bolted or screwed field connections.

C. Field Welding: Comply with AWS Code for procedures of manual shielded metal-arc welding, appearance and quality of welds made, and methods used in correcting welding work.

D. Setting Loose Bearing Plates:

Clean concrete and masonry bearing surfaces and roughen to improve bond to surfaces. Clean bottom surface of bearing plates.

Set loose bearing plates on wedges. Position bearing members and tighten the anchor bolts. Do not remove wedges but cut-off flush with the edge. Use non-metallic, non-shrink grout, unless otherwise indicated.

Pack grout solidly between bearing surfaces and plates to ensure that no voids remain.

3.3 ADJUST AND CLEAN

A. Restore finishes damaged during installation so that no evidence remains of corrective work.

B. Touch-Up Painting: Immediately after erection, power tool clean in accordance with SSPC SP-3, field welds, bolted connections, and abraded areas

of shop paint, and paint exposed areas with same material as used for shop painting. Apply by brush or spray to provide a minimum thickness of 2.0 dry mils of modified alkyd primer.

C. For Galvanized Surfaces: Thoroughly clean field welds, bolted connections and abraded areas and apply 2 coats of approved galvanizing repair compound.

D. Restore aluminum finishes as directed by the fabricator and approved by the Engineer.

END OF SECTION

SECTION 07530

SINGLE PLY MEMBRANE ROOFING AND FLASHING

PART 1 - GENERAL

1.1 RELATED DOCUMENTS

A. Examine Drawings, Contract Conditions all other Sections of the Specifications for requirements which affect work of this Section whether or not such work is specifically mentioned in this Section.

B. Coordinate work with that of all other trades affecting, or affected by work of this Section. Cooperate with such trades to assure the steady progress of all Project work.

1.2 DESCRIPTION

A. Provide all labor, materials, equipment, services and transportation required to complete the elastomeric roofing and flashings for the Toll Plaza Canopy as shown on the Drawings and as specified herein.

B. Coordinate work with that of other trades affecting or affected by work of this Section. Cooperate with such trades to assure the steady progress of all work under the Contract.

1.3 SUBMITTALS

A. Submit shop drawings to the Engineer for approval in accordance with Contract Requirements. Show details, dimensions, locations and installation methods of all elastomeric sheet roofing, insulation, metal flashings, elastomeric flashing and specialty items as indicated on the Drawings.

B. Do not commence fabrication of any work or begin installation until shop drawing approval has been obtained from the Engineer.

C. Submit samples of all materials as requested by the Engineer for approval.

D. Current EPDM membrane manufacturer's application specifications.

E. Manufacturer's details of the proposed fascia system.

F. History of roofing applications by the Contractor.

G. Roofing applicator’s licensing.

1.4 QUALITY ASSURANCE

A. Roof systems provided shall comply with FM I-90 requirements.

All elastomeric membrane roofing and flashing materials furnished and installed under this Section shall be the products of a single manufacturer, or shall be specifically approved for use by the manufacturer whose roofing specification is used. Materials shall be high grade, first quality of domestic manufacturer with an application history of ten (10) years in the United States. Furnish a written affidavit stating that these requirements have been complied with.

B. Roofing and flashing shall be applied by a roofing applicator licensed, franchised or approved by the roofing materials manufacturer, using experienced skilled roofers. Furnish a written affidavit stating that the roofing applicator is licensed by the roofing manufacturer.

C. All roofing and flashing work shall be applied in strict accordance with the roofing manufacturer's written requirements and specifications applicable to roof conditions. There shall be no deviations made from this specification or the approved shop drawings without prior written approval by the manufacturer and the Engineer.

D. Where additional work or materials, or greater quantities of materials than required by roofing manufacturer are specified herein, these Specifications shall govern.

E. Upon completion of the installation, an inspection shall be made in the presence of the Engineer by a representative of the roofing manufacturer to ascertain that the roofing system has been installed according to the applicable manufacturer's specifications and details.

F. In order to define the level of quality (material characteristics, thickness, performance, etc.), appearance, and type of roofing membrane system required, "Design A" fully adhered, FM I-90 rated, EPDM roofing system by Carlisle SynTec Systems, Carlisle, PA has been specified. Other EPDM systems, equal in all respects, such as thickness, reinforcing, tensile strength, puncture resistance, etc., may be submitted to the Engineer for evaluation.

1.5 PRE-ROOFING CONFERENCE

A. After approval of all materials and prior to installation, a pre-roofing conference shall be held at the site. In attendance shall be the Engineer, the Contractor, the roofing subcontractor and a manufacturer's representative. Notify all participants at least 3 working days prior to date of meeting.

B. The parties shall review Drawings, Specifications and approved materials. Correct conflicts, if any, between approvals and specification requirements. Examine site conditions, including inspection of deck, material labels and methods of storing materials. Confirm that all nailers, curbs and edges are provided and correctly installed. Review installation procedures, scheduling and temperature requirements, and establish protection methods for finished roof from other trades.

C. Submit a copy of pre-roofing conference records covering all discussions and agreements to the Engineer and other participants.

1.6 DELIVERY AND STORAGE

Materials shall be delivered in their original, unopened containers, clearly labeled with manufacturer's name, brand name, and such identifying numbers as are appropriate. Adhesives, sealant and mastics shall be stored at a temperature between 60°F and 80°F. Should they be exposed to lower temperatures, restore to room temperatures for 3 to 5 days prior to use. Do not use and immediately remove from jobsite any materials damaged in handling or on storage. All cardboard containers shall be stored in dry areas or on pallets.

1.7 FINAL INSPECTION

Upon completion of the installation, an inspection shall be made in the presence of the Engineer by an inspector of the EPDM roofing material manufacturer in order to ascertain that the roofing system has been properly installed. Should there be any deviation from the specifications without the prior written consent of the roofing material manufacturer and the Engineer; the Contractor shall correct such deviation to the roofing material at no additional cost to the Authority.

1.8 WARRANTY

The Contractor shall provide the Authority with a ten (10) year written warranty issued by the primary manufacturer of the new roofing system covering full cost of labor and materials necessary to affect water tightness. The original copy of the warranty shall be delivered to the Authority when the job is completed and a 20 year all Material Only Warranty as issued by the primary manufacturer of the EPDM sheeting shall be provided to the Authority. Warranties from fabricator's agents or installers will not constitute compliance with these warranty requirements.

1.9 TESTING OF FASTENERS

Field testing of fasteners will be required. For each separate roof area ten random fasteners shall be tested for minimum pull-out resistance of 400 pounds. A report of the findings shall be forwarded to the Engineer. Testing shall be performed by the fastener manufacturer without additional cost to the Authority.

1.10 INTENT

It is not the intent herein to describe all of the details for roofing and flashing. The Contractor shall assure himself that all items and details not otherwise specified herein but shown on or reasonably inferred or implied by the Drawings, or as otherwise required by the membrane manufacturer to achieve a complete watertight installation, shall be provided under this Contract at no additional cost to the Authority .

PART 2 - MATERIALS

2.1 MEMBRANE AND MATERIALS

A. General: Trade names and materials specified herein for elastomeric materials are based on Carlisle SynTec System and are used throughout for purposes of establishing the quality of materials to be used on this Contract. All requested substitutions submitted for approval shall meet the physical properties, test methods and warranty specified or inferred herein. Substitutions not meeting these requirements will be rejected.

B. Membrane shall be based on 0.060 inch thick "Black" polyester reinforced elastomeric membrane, Ethylene Propylene Diene Monomer sheet "EPDM" compound as manufactured by Carlisle SynTec Systems, Division of Carlisle Corporation, Carlisle, PA or other manufacturer's membrane having equal or better physical characteristics as approved by the Engineer.

C. Metal flashing shall be System 100/200, FA-65 by Metal-Era, Inc. or approved equal. Fascia and extender to be .050" mill finish aluminum.

D. Elastomeric flashing shall be 1/16 inch thick compatible uncured EPDM sheet, flashing furnished by the membrane manufacturer.

E. Bonding adhesive shall be synthetic rubber adhesive furnished by the roofing membrane manufacturer and formulated for bonding elastomeric membrane to substrates.

F. Splicing cement shall be high strength solvent base contact synthetic rubber cement furnished by the roofing membrane manufacturer and formulated for splicing EPDM membranes to them.

G. In-seam sealant shall be silicone base type sealant furnished by the roofing membrane manufacturer and formulated for splice seams following cement application.

H. Splice solvent shall be solvent base cleaner furnished by the roofing membrane manufacturer to provide clean surfaces for application of splicing cement.

H. Lap sealant shall be heavy bodied trowel or gum consistency material furnished by the roofing membrane manufacturer and formulated to seal the exposed edges of elastomeric membrane lap splice and at mechanical terminations of vertical or horizontal surfaces, or to seal off membrane terminating in reglets in accordance with manufacturer's details.

I. Water cut-off mastic shall be a low viscosity butyl compound furnished by the roofing membrane material manufacturer, compounded and designed to be used as a sealing agent between membranes and most substrates for the compartmentalization of waterproof areas, and as a sealant in conjunction with deck drain details.

J. Night seal shall be a two-component, fluid applied elastomer furnished by the roofing membrane manufacturer and compounded for use to temporarily seal the loose edge of the membrane to protect completed sections of roof from infiltration of water and outside

elements.

K. Pourable sealer shall be a two-component, fluid applied elastomer furnished by the roofing membrane manufacturer and compounded for use to temporarily seal the loose edge of the membrane to protect completed sections of roof from infiltration of water and other elements.

L. Rubber fastening strips shall be extruded hard rubber, predrilled at 12 inches on center to accommodate screw fasteners, furnished by the roofing material manufacturer, designed to secure roof membrane at roof perimeter, or other conditions as recommended by the manufacturer's details.

2.2 ROOF BOARD (CANOPY)

Glass mat faced, non-combustible, moisture-resistant silicone treated gypsum core panels equal to “DensDeck” as manufactured by Georgia-Pacific of the thickness indicated on the Drawings.

2.3 FASTENERS

Fasteners required for fiberboard underlayment fastening shall be non-corrosive Phillips-head predrilled self-tapping screw-type with 2-1/2 inch diameter 24-gauge deformed tin-plated steel discs in screw, length approved for conditions respectively to penetrate the wood deck a minimum of 3/4 inch in depth and metal deck as required by the roofing membrane manufacturer. Fastener layout shall conform to FM Class I-90 and membrane manufacturer's specifications and requirements.

PART 3 –EXECUTION

3.1 INSPECTION OF SURFACES AND COORDINATION OF WORK

A. Before roofing work begins, roof areas shall be carefully inspected and checked for all conditions affecting insulation, roof board roofing applications and performance. Carefully check nailing strips for suitability as anchorage. Defects shall be reported in writing to the Engineer and roofing work shall not proceed until defects have been corrected. Commencement of work shall constitute acceptance of the conditions of the surfaces to which the complete roofing system work is to be applied, and all defects in work resulting from such accepted surfaces shall be corrected by this trade without additional cost to the Authority.

B. Coordinate all work with that of other trades affecting, or affected by roofing work. Verify the placement of nailers for all locations and conditions where materials of this Section are affected.

C. Roof Surface Preparation

1. Remove all debris from the roof.

2. Verify that all woodwork is properly installed to receive the roofing materials and

that the woodwork is compatible with the roofing membrane and flashing.

3. Make sure surfaces are clean and dry. Sweep, vacuum or use compressed air to clean roof substrate surfaces as required for application of insulation, roofing membrane, and flashings.

4. Repair all joints and cracks wider than 1/4" with approved sealant.

5. Fill depressions with non-asphaltic felt as necessary to provide a level substrate surface where insulation is to be mechanically fastened.

3.2 INSTALLATION OF INSULATION

A. Install apply each layer of insulation (flat and tapered) in accordance with the approved Shop Drawings, with joints closely butted and staggered in both directions at mid-points. Boards shall be uniform throughout, with square edges and corners, and with no voids, open joints, broken corners, or damaged edges. Immediately remove all wet, broken, bowed and otherwise defective boards from the site.

B. Install only as much insulation as can be covered with completed roofing membrane and flashings, and sealed the same day.

C. Scribe insulation tight to roof projections and vertical surfaces unless otherwise indicated on the approved Shop Drawings or installation instructions.

D. Install insulation with all joints offset. Tightly butt insulation and fill all joints over 1/4" wide with approved sealant. Mechanically fasten the insulation to the deck as required to meet FM I-90 requirements and the membrane manufacturer in open areas and at the perimeter, at curbs and openings, and at intersections with vertical and sloped surfaces.

E. Check all completed insulation installations with accurate optical instruments (e.g., transits) to insure that proper slope has been provided; correct non-compliant work.

3.3 INSTALLATION OF ROOF BOARD

Install roof board in accordance with the requirements specified for insulation above, and the requirements of the board manufacturer.

3.4 INSTALLATION OF DRAINS

A. New drains shall be installed in accordance with the details as shown on the Plans, the recommendations of the manufacturer and/or as directed by the Engineer.

B. Roof drain flashing flanges shall extend beyond the drains to a minimum of 6 inches in all directions. Flashing flanges shall be secured to the drains by means of a clamping ring furnished and set with the drain.

3.5 ELASTOMERIC MEMBRANE INSTALLATION (ADHESIVE APPLIED)

A. Elastomeric sheet roofing shall be installed in strict accordance with manufacturer's standard roofing specifications for a fully adhered sheet roofing system and as specified herein. Comply with manufacturer's recommendations for temperature during installation.

B. Position roofing membrane over insulation without stretching. Allow membrane to relax for approximately one hour prior to bonding. Fold sheet back so one half of sheet is exposed. Sheet fold shall be smooth, no wrinkles or buckles. Apply bonding adhesive evenly, no globs or puddles, with a plastic core paint roller. Adhesive shall be applied to both sheet and substrate at rate recommended by the manufacturer. Allow adhesive to dry until tacky. Roll coated membrane into adhesive, void wrinkles, and brush down with a push broom to achieve maximum contact. Repeat procedure for unbonded half of membrane.

C. At each lap, fold top sheet back about 12 inches and clean both mating surfaces at a splice area using clean rags with splice solvent. Apply splicing cement using 3 inch paint brush at a rate of approximately 175 lineal feet of 3 inch splice per gallon of splicing cement. Cement shall be brushed on in a circular motion obtaining 100 percent coverage on both mating surfaces. Cement coat shall be smooth with no globs or puddles. Allow cement to dry until it does not string or stick to dry finger touch.

D. Follow procedures using inseam sealant at splice joints applied continuously. Roll top sheet toward splice area until cemented area is nearly touching cement on bottom sheet. Allow top sheet to fall freely into place. Avoid stretching and wrinkling. Roll the splice with 2 inch wide steel roller, using positive pressure, toward outer edge of splice. Solvent clean splice edge, extending at least 1 inch onto top and bottom membranes. Apply bead of lap sealant completely covering splice edge, carefully tooling lap sealant with putty knife or trowel.

E. Install rubber fastening strips at vertical and/or horizontal surfaces to secure membrane flashing, using the approved non-corrosive fastenings in accordance with manufacturer's written instructions.

F. Except where otherwise shown, perimeter flashing and other flashings shall be done with uncured EPDM elastomeric flashing sheet, using the longest pieces practicable. Splicing between flashing and main roof sheet shall be completed before bonding of flashing to the vertical surface. This splice shall be sealed at least 3 inches beyond the fasteners which attach horizontal membrane to nailers. Apply bonding adhesive to both the membrane and the surface to which it is being bonded. After bonding adhesive has dried so that it does not string or stick to dry finger touch, roll the flashing into the adhesive. Take care to assure that the flashing is not bridging where there is any change of direction of the flashing (e.g., where vertical surfaces meet roof deck).

G. Install water cut-off mastic between membrane and substrates in accordance with manufacturer's written specifications and details.

H. Flash all projections passing through the membrane using pipe seals. All flashings and terminations shall be done in accordance with manufacturer's standard printed details. Flash and make watertight roof drains and all other penetrations.

I. At the end of each day's work, take care to ensure that water does not flow beneath any completed sections of roof by temporarily sealing loose edge of membrane with night sealer when weather is threatening. Prepare sealer according to manufacturer's written instructions. Apply sealer at a rate of approximately 100 lineal feet per gallon, 12 inches back from edge of sheet. Use a trowel as necessary to spread sealer material in order to achieve prescribed coverage. After membrane is embedded in night sealer, weight the edge, providing continuous pressure over the length of the cutoff. When work is resumed, pull the sheet free before installation is continued. Allow no unfinished roof areas to be left unprotected in wet weather or at night.

J. After completion, protect elastomeric roofing from traffic and damage of all kinds.

3.6 ALUMINUM FASCIA

A. Sheet aluminum shall be .040" thick, finish to match existing fascia.

B. Fabricate and install sheet metal with lines, arises and angles sharp and true and plane surfaces free from objectionable wave, warp or buckle. Exposed edges of sheet metal shall be folded back to form a 1/2" wide hem on the side concealed from water leakage under all weather conditions. The workmanship and methods employed for framing, anchoring, cleating and the expansion and contraction of sheet metal work shall conform to applicable details and description as indicated in current edition of the following publications unless other methods are indicated on project drawings or specified herein.

Architectural Sheet Metal Manual as published by the Sheet Metal and Air Conditioning contractors National Association, Inc. and hereinafter referred to as “The SMACNA Manual”

3.7 PROTECTION

This trade shall be responsible for, and repair, all damage resulting from his work or operations. Particular care shall be taken to avoid staining any part of the exposed structure or finished work. Hoisting of materials shall be done with extreme care. Use approved means to protect exposed surfaces.

3.8 CLEAN UP

At completion of work, remove from the site and legally dispose of the packaging, containers, and other accumulated materials, and leave the work in a cleaned and satisfactory condition as approved by the Engineer.

END OF SECTION

APPENDIX A

LEAD PAINT ASSESSMENT

and

ASBESTOS REPORT

Northeast Laboratory Services

P.O. Box 788
Waterville, Maine 04903-0788

227 China Road
Winslow, Maine 04901

Administrative Offices
Phone: 207-873-7711
Fax: 207-873-7022

Customer Service
Phone: 800-244-8378
Fax: 207-873-7022

ANALYSIS REPORT

Attention: Robert W Rickett Jr
Abatement Prof Corp
590 County Rd Suite 2
Westbrook ME 04092

Lab ID Number: AS00103
Project Number: 150115164413
P.O. Number: AS00094-07
Date Collected: 01/14/2015 12:00 AM
Date Received: 01/15/2015 04:00 PM
Date Reported: 01/26/2015

Sample Matrix: PAINT
Sample Description: L-10 Exit 44 Support Post Northbound
Sample Type: Grab

Parameter	Result	Qualifier	Unit	Reporting Limit	Method	Preparation Date/Time	Analysis Date/Time	Analyst
Lead Total	0.011		%	0.01	EPA 6010B	01/21/2015 12:00	01/22/2015 14:54	ITG
*								

Comments:

Please see the specific analysis comment(s) above.

This report shall not be reproduced, except in full, without written permission from Northeast Laboratory Services.

Authorized By: **Harold Flachsbart, Chemistry Laboratory Director** **Review Date:** 01/26/2015

Analytical results and reports are generated by NEL at the request of and for the exclusive use of the person or entity (client) named on this report. Results, reports or copies of same will not be released by NEL to any third party without the prior express written consent from the client named in this report. This report applies only to those samples taken at the time, place and location referenced by the client. This report makes no express or implied warranty or guarantee as to the sampling methodology used by the individual performing the sampling. The client is solely responsible for the use and interpretation of these results and NEL makes no express or implied warranties as to such use or interpretation. NEL is not able to make and does not make a determination as to the environmental soundness, safety or health of a property from only the samples sent to their laboratory for analysis. Unless otherwise specified by the Client, NEL reserves the right to dispose of all samples after the testing of such samples is sufficiently completed or after a thirty-day period, whichever period is greater. NEL liability extends only to the cost of the testing.

Winslow lab is accredited by the State of Maine Department of Health and Human Services, Maine Center for Disease Control and Prevention (ME00009).

Northeast Laboratory Services

P.O. Box 788
Waterville, Maine 04903-0788

227 China Road
Winslow, Maine 04901

Administrative Offices
Phone: 207-873-7711
Fax: 207-873-7022

Customer Service
Phone: 800-244-8378
Fax: 207-873-7022

ANALYSIS REPORT

Attention: Robert W Rickett Jr
Abatement Prof Corp
590 County Rd Suite 2
Westbrook ME 04092

Lab ID Number: AS00105
Project Number: 150115164413
P.O. Number: AS00094-07
Date Collected: 01/14/2015 12:00 AM
Date Received: 01/15/2015 04:00 PM
Date Reported: 01/26/2015

Sample Matrix: PAINT
Sample Description: L-12 Exit 36 Support Post
Sample Type: Grab

Parameter	Result	Qualifier	Unit	Reporting Limit	Method	Preparation Date/Time	Analysis Date/Time	Analyst
Lead Total	<0.01		%	0.01	EPA 6010B	01/21/2015 12:00	01/22/2015 13:52	ITG

Comments:

This report shall not be reproduced, except in full, without written permission from Northeast Laboratory Services.

Authorized By: **Harold Flachsbart, Chemistry Laboratory Director** **Review Date:** 01/26/2015

Analytical results and reports are generated by NEL at the request of and for the exclusive use of the person or entity (client) named on this report. Results, reports or copies of same will not be released by NEL to any third party without the prior express written consent from the client named in this report. This report applies only to those samples taken at the time, place and location referenced by the client. This report makes no express or implied warranty or guarantee as to the sampling methodology used by the individual performing the sampling. The client is solely responsible for the use and interpretation of these results and NEL makes no express or implied warranties as to such use or interpretation. NEL is not able to make and does not make a determination as to the environmental soundness, safety or health of a property from only the samples sent to their laboratory for analysis. Unless otherwise specified by the Client, NEL reserves the right to dispose of all samples after the testing of such samples is sufficiently completed or after a thirty-day period, whichever period is greater. NEL liability extends only to the cost of the testing.

Winslow lab is accredited by the State of Maine Department of Health and Human Services, Maine Center for Disease Control and Prevention (ME00009).

Northeast Laboratory Services

P.O. Box 788
Waterville, Maine 04903-0788

227 China Road
Winslow, Maine 04901

Administrative Offices
Phone: 207-873-7711
Fax: 207-873-7022

Customer Service
Phone: 800-244-8378
Fax: 207-873-7022

ANALYSIS REPORT

Attention: Robert W Rickett Jr
Abatement Prof Corp
590 County Rd Suite 2
Westbrook ME 04092

Lab ID Number: AS00104
Project Number: 150115164413
P.O. Number: AS00094-07
Date Collected: 01/14/2015 12:00 AM
Date Received: 01/15/2015 04:00 PM
Date Reported: 01/26/2015

Sample Matrix: PAINT
Sample Description: L-11 Exit 36 Canopy
Sample Type: Grab

Parameter	Result	Qualifier	Unit	Reporting Limit	Method	Preparation Date/Time	Analysis Date/Time	Analyst
Lead Total *	<0.01		%	0.01	EPA 6010B	01/21/2015 12:00	01/22/2015 13:48	ITG

Comments:

Please see the specific analysis comment(s) above.

This report shall not be reproduced, except in full, without written permission from Northeast Laboratory Services.

Authorized By: **Harold Flachsbart, Chemistry Laboratory Director** **Review Date:** 01/26/2015

Analytical results and reports are generated by NEL at the request of and for the exclusive use of the person or entity (client) named on this report. Results, reports or copies of same will not be released by NEL to any third party without the prior express written consent from the client named in this report. This report applies only to those samples taken at the time, place and location referenced by the client. This report makes no express or implied warranty or guarantee as to the sampling methodology used by the individual performing the sampling. The client is solely responsible for the use and interpretation of these results and NEL makes no express or implied warranties as to such use or interpretation. NEL is not able to make and does not make a determination as to the environmental soundness, safety or health of a property from only the samples sent to their laboratory for analysis. Unless otherwise specified by the Client, NEL reserves the right to dispose of all samples after the testing of such samples is sufficiently completed or after a thirty-day period, whichever period is greater. NEL liability extends only to the cost of the testing.

Winslow lab is accredited by the State of Maine Department of Health and Human Services, Maine Center for Disease Control and Prevention (ME00009).

Northeast Laboratory Services

P.O. Box 788
Waterville, Maine 04903-0788

227 China Road
Winslow, Maine 04901

Administrative Offices
Phone: 207-873-7711
Fax: 207-873-7022

Customer Service
Phone: 800-244-8378
Fax: 207-873-7022

ANALYSIS REPORT

Attention: Robert W Rickett Jr
Abatement Prof Corp
590 County Rd Suite 2
Westbrook ME 04092

Lab ID Number: AS00107
Project Number: 150115164413
P.O. Number: AS00094-07
Date Collected: 01/14/2015 12:00 AM
Date Received: 01/15/2015 04:00 PM
Date Reported: 01/26/2015

Sample Matrix: PAINT
Sample Description: L-14 Exit 32 Canopy
Sample Type: Grab

Parameter	Result	Qualifier	Unit	Reporting Limit	Method	Preparation Date/Time	Analysis Date/Time	Analyst
Lead Total	<0.01		%	0.01	EPA 6010B	01/21/2015 12:00	01/22/2015 14:05	ITG

Comments:

This report shall not be reproduced, except in full, without written permission from Northeast Laboratory Services.

Authorized By: **Harold Flachsbart, Chemistry Laboratory Director** **Review Date:** 01/26/2015

Analytical results and reports are generated by NEL at the request of and for the exclusive use of the person or entity (client) named on this report. Results, reports or copies of same will not be released by NEL to any third party without the prior express written consent from the client named in this report. This report applies only to those samples taken at the time, place and location referenced by the client. This report makes no express or implied warranty or guarantee as to the sampling methodology used by the individual performing the sampling. The client is solely responsible for the use and interpretation of these results and NEL makes no express or implied warranties as to such use or interpretation. NEL is not able to make and does not make a determination as to the environmental soundness, safety or health of a property from only the samples sent to their laboratory for analysis. Unless otherwise specified by the Client, NEL reserves the right to dispose of all samples after the testing of such samples is sufficiently completed or after a thirty-day period, whichever period is greater. NEL liability extends only to the cost of the testing.

Winslow lab is accredited by the State of Maine Department of Health and Human Services, Maine Center for Disease Control and Prevention (ME00009).

Northeast Laboratory Services

P.O. Box 798
Waterville, Maine 04903-0798

227 China Road
Winslow, Maine 04901

Administrative Offices
Phone: 207-873-7711
Fax: 207-873-7022

Customer Service
Phone: 800-244-8378
Fax: 207-873-7022

ANALYSIS REPORT

Attention: Robert W Rickett Jr
Abatement Prof Corp
590 County Rd Suite 2
Westbrook ME 04092

Lab ID Number: AS00106
Project Number: 150115164413
P.O. Number: AS00094-07
Date Collected: 01/14/2015 12:00 AM
Date Received: 01/15/2015 04:00 PM
Date Reported: 01/26/2015

Sample Matrix: PAINT
Sample Description: L-13 Exit 32 Support Post
Sample Type: Grab

Parameter	Result	Qualifier	Unit	Reporting Limit	Method	Preparation Date/Time	Analysis Date/Time	Analyst
Lead Total	<0.01		%	0.01	EPA 6010B	01/21/2015 12:00	01/22/2015 14:01	ITG

Comments:

This report shall not be reproduced, except in full, without written permission from Northeast Laboratory Services.

Authorized By: **Harold Flachsbart, Chemistry Laboratory Director** **Review Date:** 01/26/2015

Analytical results and reports are generated by NEL at the request of and for the exclusive use of the person or entity (client) named on this report. Results, reports or copies of same will not be released by NEL to any third party without the prior express written consent from the client named in this report. This report applies only to those samples taken at the time, place and location referenced by the client. This report makes no express or implied warranty or guarantee as to the sampling methodology used by the individual performing the sampling. The client is solely responsible for the use and interpretation of these results and NEL makes no express or implied warranties as to such use or interpretation. NEL is not able to make and does not make a determination as to the environmental soundness, safety or health of a property from only the samples sent to their laboratory for analysis. Unless otherwise specified by the Client, NEL reserves the right to dispose of all samples after the testing of such samples is sufficiently completed or after a thirty-day period, whichever period is greater. NEL liability extends only to the cost of the testing.

Winslow lab is accredited by the State of Maine Department of Health and Human Services, Maine Center for Disease Control and Prevention (ME00009).

Asbestos Building Materials Summary
Interchange No. 4 – Biddeford

Toll Booths and Canopy

Building Materials Evaluated or Tested

Toll Booths

- Built-up Roofing Systems on Toll Booths

Canopy

- Built-up Roofing Systems on Toll Booths

Utility Pits

- No Suspect Asbestos Materials Sampled or Anticipated

Asbestos Containing Building Materials

- Roofing Cement on Canopy Roof Edge

Asbestos Materials Inventory

LOCATION	MATERIAL	QUANTITY	CONDITION	RECOMMENDATION	COST
Canopy Roof	Roof Cement	120 sq. ft.	Good	Manage in-place	$1,000
	Around Edge				

No other accessible suspect asbestos building materials are anticipated in the Toll Booths or Canopy. If any suspect material(s) that not have been documented in this survey are encountered during destructive renovations or demolition, additional sampling should be conducted to determine if asbestos is present.

Asbestos Bulk Sample Summary
Interchange No. 4 – Biddeford

Toll Booths and Canopy

Sample #	Location	Description	%Asbestos
B-1a	Canopy Roof	Roofing Material / Black	None Detected
B-1b	"	"	"
B-1c	"	"	"
B-2a	Canopy Roof	Edge Flashing Material / Black	**1. 5 % Chrysotile**
B-2b	"	"	"
B-2c	"	"	"
B-3a	Toll Booth Roof	Roofing Materials / Black	None Detected
B-3b	"	"	"
B-3c	"	"	"
B-4a	Toll Booths	Cash Counter Material / Black	None Detected
B-4b	"	"	"
B-4c	"	"	"

ESHA

IATL International Asbestos Testing Laboratories

Asbestos

Chain of Custody Form

Sample Number	Location/Area	Sample Description	Sample Color
	Site: INTERCHANG NO# 4 Biddeford		
	Building: Toll Booth and Canopy		
B1A 1161640	Canopy Roof	Roofing MATERIAL	Black
B 1161641	↓	↓	↓
C 1161642	↓	↓	↓
B2A 1161643	Canopy Roof	Flashing material	Black
B 1161644	↓	↓	↓
C 1161645	↓	↓	↓
B3A 1161646	Toll Booth Roof	Roofing material	Black
B 1161647	↓	↓	↓
C 1161648	↓	↓	↓
B4A 1161649	Toll Booths	Counter top material	Black
B 1161650	↓	↓	↓
C 1161651	↓	↓	↓

ESH Associates

IATL International Asbestos Testing Laboratories

16000 Horizon Way Unit 100 Mt. Laurel, NJ 08054

Telephone: 856-231-9449 Fax: 856-231-9818

CERTIFICATE OF ANALYSIS

Client: Environmental Safety & Hygiene
5 Delta Drive
Westbrook ME 04092

Report Date: 10/02/2000
Project: Interchange#4; TollBooth&Canopy
Project No.:

BULK SAMPLE ANALYSIS SUMMARY

Lab No. 1161640 **Material Description:** Black Roof Material
Client No.: B1A **Location:** Canopy Roof

% Asbestos	Type	% Non-Asbestos Fibrous Material	Type	% Non-Fibrous Material
None Detected	None Detected	35	Cellulose	65

Lab No. 1161641 **Material Description:** Black/Tan Roof Mat'l
Client No.: B1B **Location:** Canopy Roof

% Asbestos	Type	% Non-Asbestos Fibrous Material	Type	% Non-Fibrous Material
None Detected	None Detected	45	Cellulose	55
		Trace	Fibrous Glass	

Lab No. 1161642 **Material Description:** Black Roof Material
Client No.: B1C **Location:** Canopy Roof

% Asbestos	Type	% Non-Asbestos Fibrous Material	Type	% Non-Fibrous Material
None Detected	None Detected	35	Cellulose	65

Lab No. 1161643 **Material Description:** Black Roof Material
Client No.: B2A **Location:** Canopy Roof

% Asbestos	Type	% Non-Asbestos Fibrous Material	Type	% Non-Fibrous Material
PC 1.5	Chrysotile	25	Cellulose	PC 73.5

NIST-NVLAP No. 1165 **NY-DOH No. 11021** **AIHA Lab No. 444**

This confidential report relates only to those item(s) tested and does not represent an endorsement by NIST-NVLAP or any agency of the U.S. government.

Analysis Method: EPA 600/R-93/116

Comments: (PC) Indicates Stratified Point Count Method performed. Method not performed unless stated. PLM is not consistently reliable in detecting asbestos in floor coverings and similar non-friable organically bound materials. Before this material can be considered or treated as non-asbestos containing, confirmation must be made by quantitative TEM.

Analysis Performed By: H. Sonny Robb, AIHA-AAR 4883

Date: OCT 0 1 2000

Approved By: Frank E. Ehrenfeld, III
Laboratory Director

IATL International Asbestos Testing Laboratories

16000 Horizon Way Unit 100 Mt. Laurel, NJ 08054

Telephone: 856-231-9449 Fax: 856-231-9818

CERTIFICATE OF ANALYSIS

Client: Environmental Safety & Hygiene
5 Delta Drive
Westbrook ME 04092

Report Date: 10/02/2000
Project: Interchange#4; TollBooth&Canopy
Project No.:

BULK SAMPLE ANALYSIS SUMMARY

Lab No. 1161644 **Material Description:** Sample Not Analyzed
Client No.: B2B **Location:**

% Asbestos	Type	% Non-Asbestos Fibrous Material	Type	% Non-Fibrous Material
Sample Not Analyzed		Sample Not Analyzed		

Lab No. 1161645 **Material Description:** Sample Not Analyzed
Client No.: B2C **Location:**

% Asbestos	Type	% Non-Asbestos Fibrous Material	Type	% Non-Fibrous Material
Sample Not Analyzed		Sample Not Analyzed		

Lab No. 1161646 **Material Description:** Black/Brown
Client No.: B3A **Location:** Roof Material Toll Booth Roof

% Asbestos	Type	% Non-Asbestos Fibrous Material	Type	% Non-Fibrous Material
None Detected	None Detected	45	Cellulose	55

Lab No. 1161647 **Material Description:** Black Roof Material
Client No.: B3B **Location:** Toll Booth Roof

% Asbestos	Type	% Non-Asbestos Fibrous Material	Type	% Non-Fibrous Material
None Detected	None Detected	25	Cellulose	75

NIST-NVLAP No. 1165 **NY-DOH No. 11021** **AIHA Lab No. 444**

This confidential report relates only to those item(s) tested and does not represent an endorsement by NIST-NVLAP or any agency of the U.S. government.

Analysis Method: EPA 600/R-93/116

Comments: (PC) Indicates Stratified Point Count Method performed. Method not performed unless stated. PLM is not consistently reliable in detecting asbestos in floor coverings and similar non-friable organically bound materials. Before this material can be considered or treated as non-asbestos containing, confirmation must be made by quantitative TEM.

Analysis Performed By: H. Sonny Robb, AIHA-AAR 4883

Date: OCT 0 1 2000

Approved By:

Frank E. Ehrenfeld, III
Laboratory Director

IATL International Asbestos Testing Laboratories

16000 Horizon Way Unit 100 Mt. Laurel, NJ 08054

Telephone: 856-231-9449 Fax: 856-231-9818

CERTIFICATE OF ANALYSIS

Client: Environmental Safety & Hygiene
5 Delta Drive
Westbrook ME 04092

Report Date: 10/02/2000
Project: Interchange#4; TollBooth&Canopy
Project No.:

BULK SAMPLE ANALYSIS SUMMARY

Lab No. 1161648 **Material Description:** Black Roof Material
Client No.: B3C **Location:** Toll Booth Roof

% Asbestos	Type	% Non-Asbestos Fibrous Material	Type	% Non-Fibrous Material
None Detected	None Detected	25	Cellulose	75

Lab No. 1161649 **Material Description:** Black/Brown Fibrous
Client No.: B4A **Location:** Tan Mastic Toll Booths

% Asbestos	Type	% Non-Asbestos Fibrous Material	Type	% Non-Fibrous Material
None Detected	None Detected	10	Cellulose	90

Lab No. 1161649 **Material Description:** Black/Brown Fibrous
Client No.: B4A **Location:** Tan Mastic Toll Booths

% Asbestos	Type	% Non-Asbestos Fibrous Material	Type	% Non-Fibrous Material
None Detected	None Detected	None Detected	None Detected	100
Tan Mastic				
From Above				

Lab No. 1161650 **Material Description:** Black/Brown Fibrous
Client No.: B4B **Location:** Tan Mastic Toll Booths

% Asbestos	Type	% Non-Asbestos Fibrous Material	Type	% Non-Fibrous Material
None Detected	None Detected	10	Cellulose	90

NIST-NVLAP No. 1165 **NY-DOH No. 11021** **AIHA Lab No. 444**

This confidential report relates only to those item(s) tested and does not represent an endorsement by NIST-NVLAP or any agency of the U.S. government.

Analysis Method: EPA 600/R-93/116

Comments: (PC) Indicates Stratified Point Count Method performed. Method not performed unless stated. PLM is not consistently reliable in detecting asbestos in floor coverings and similar non-friable organically bound materials. Before this material can be considered or treated as non-asbestos containing, confirmation must be made by quantitative TEM.

Analysis Performed By: H. Sonny Robb, AIHA-AAR 4883

Date: OCT 0 1 2000

Approved By: Frank E. Ehrenfeld, III
Laboratory Director

IATL International Asbestos Testing Laboratories

16000 Horizon Way Unit 100 Mt. Laurel, NJ 08054

Telephone: 856-231-9449 Fax: 856-231-9818

CERTIFICATE OF ANALYSIS

Client: Environmental Safety & Hygiene
5 Delta Drive
Westbrook ME 04092

Report Date: 10/02/2000
Project: Interchange#4; TollBooth&Canopy
Project No.:

BULK SAMPLE ANALYSIS SUMMARY

Lab No. 1161650 **Material Description:** Black/Brown Fibrous
Client No.: B4B **Location:** Tan Mastic Toll Booths

% Asbestos	Type	% Non-Asbestos Fibrous Material	Type	% Non-Fibrous Material
None Detected	None Detected	None Detected	None Detected	100
Tan Mastic				
From Above				

Lab No. 1161651 **Material Description:** Black/Brown Fibrous
Client No.: B4C **Location:** Tan Mastic Toll Booths

% Asbestos	Type	% Non-Asbestos Fibrous Material	Type	% Non-Fibrous Material
None Detected	None Detected	10	Cellulose	90

Lab No. 1161651 **Material Description:** Black/Brown Fibrous
Client No.: B4C **Location:** Tan Mastic Toll Booths

% Asbestos	Type	% Non-Asbestos Fibrous Material	Type	% Non-Fibrous Material
None Detected	None Detected	None Detected	None Detected	100
Tan Mastic				
From Above				

NIST-NVLAP No. 1165 **NY-DOH No. 11021** **AIHA Lab No. 444**

This confidential report relates only to those item(s) tested and does not represent an endorsement by NIST-NVLAP or any agency of the U.S. government.

Analysis Method: EPA 600/R-93/116

Comments: (PC) Indicates Stratified Point Count Method performed. Method not performed unless stated. PLM is not consistently reliable in detecting asbestos in floor coverings and similar non-friable organically bound materials. Before this material can be considered or treated as non-asbestos containing, confirmation must be made by quantitative TEM.

Analysis Performed By: H. Sonny Robb, AIHA-AAR 4883

Date: OCT 0 1

Approved By: Frank E. Ehrenfeld, III
Laboratory Director

IATL International Asbestos Testing Laboratories

16000 Horizon Way Unit 100 Mt. Laurel, NJ 08054
Telephone: 609.231.9449 Fax: 609.231.9818

Chain of Custody -

Client: ENVIRONMENTAL SAFETY/HYGIENE
5 DELTA DRIVE
WESTBROOK, MAINE 04092

Project Name: INTERCHANGE 140 4 - BIDD
Project No.: TOLL BOOTH & CANOPY

Phone: 207-854-2711
FAX: 207-854-2609

Contact:
Pager:

Special Instructions: IF ASBESTOS BULK ANALYZE TIL POS

Type:

Asbestos		Lead		Other
[ ] Air	[ ] Soil	[ ] Air	[ ] Soil	
[✓] Bulk	[ ] Dust	[ ] Bulk	[ ] Paint	
[ ] Water	[ ] Other	[ ] Water	[ ] Other	

Analysis Method:

[ ] PCM : NIOSH 7400
[ ] PCM : OSHA
[ ] PCM : Other_____

[ ] AAS : NIOSH 7082 (Air)
[ ] AAS : Lead in Drinking Water
[ ] AAS : Lead in Paint ASTM D3335-85a
[ ] AAS : Lead Dust/Wipe "
[ ] AAS : Other Metals / Soil_____

[✓] PLM : Bulk Asbestos EPA 600
[ ] PLM : Point Counting 198.1
[ ] PLM : NOB via 198.1 (PLM only)
[ ] If <1% by PLM, to TEM via 198.4 to meet NYSDOH requirements **
(**call to confirm TAT!)

[ ] TEM : AHERA
[ ] TEM : NIOSH 7402
[ ] TEM : EPA Level II
[ ] TEM : Microvac Dust
[ ] TEM : Asbestos in Water
[ ] TEM : Bulk Analysis
[ ] TEM : NOB 198.4
[ ] TEM : Other_____
[ ] Total Dust : NIOSH 0500

Turnaround Time:

FAX: _____ (date / time) Verbals: _____ (date / time)

[ ] 10 Day [✓] 5 Day [ ] 72 hour [ ] 48 hour [ ] 24 hour [ ] 6 hour [ ] RUSH

Preliminary FAX/Verbal Results Requested by: _____

Sample Numbers:

Client #(s): B1 [illegible] - B4 [illegible] (start) (end)

IATL#(s): _____ - _____ (start) (end) Total: 12

Chain of Custody:

Relinquished:	[signature]	Date: 9-21-2000	Time: 1600
Received:	[signature]	Date:	Time:
Sample Log-in:		Date:	Time:
Sample Prep:		Date:	Time:
Analyzed:	[signature] 10/1	Date:	Time:
QA/QC Review:	[signature]	Date: 10/5/00	Time:

RECEIVED SEP 25 2000

Archived/Released: _____ QA/QC InterLAB Use: _____ Date: _____ Time: _____

APPENDIX B

PLAZA SAFETY REQUIREMENTS

PLAZA SAFETY REQUIREMENTS

The following are the minimum Plaza Lane closure requirements for completing the work. The limits have been set to protect Turnpike patrons and Toll Attendants from potential harm during the construction. The Contractor shall utilize this information in bidding the work. Drums and constructions signs will be paid under their respective pay items. Movement of drums and construction signs will be paid under the Maintenance of Traffic pay item.

The Contractor shall furnish, erect, maintain and relocate twenty 10 inch by 14 inch (minimum dimensions) DANGER – Unauthorized Persons Keep Out, or DANGER – DO NOT ENTER signs, meeting OSHA specifications for size, color and legend, for installation on toll booths or drums, as directed by the Resident. The Contractor shall furnish and install red hazard safety tape between barrels and in cordoned off tunnel and lane areas to identify the hazard areas for Turnpike patrons and Toll Attendants. The purchase, erection, maintenance, and relocation of the hazard signs and hazard safety tape shall be incidental to the mobilization pay item. Providing, maintaining and relocating the specified plywood safety walkways at all locations shall also be incidental to the mobilization pay item.

Unless otherwise specified all labor, materials and equipment required to meet the requirements of Appendix C shall be incidental to the various pay items. Maintenance of Traffic signing shall be in place during plaza work at all times.

APPENDIX C

DEFINED TERMS

DEFINED TERMS

- **AVI (Automatic Vehicle Identification)**: a system consisting of an antenna and reader installed in a toll lane for communication with a transponder located on a vehicle for automatic identification of the transponder as it passes through the lane.
- **Canopy Override Switch (COS)**: shall mean the switch that controls the signal that is located on the canopy on the entry side of each toll lane.
- **Sensor Loops**: a system for automatic vehicle detection, separation and classification.
- **COMM -** Communications
- **Components**: parts that compose a device or piece of equipment.
- **DVAS (Digital Video Audit System)** – A video camera and image storage system that captures traffic movements in the lane 24 hours a day.
- **EMT -** Electrical Metallic Tubing
- **Gradient Sensor** – Part of the Sensor Loop system **-** a gradient sensor is placed on each side of the Primary sensor.
- **Contractor**: the Contractor hired by the Authority through a solicitation process to complete the Project.
- **JB -** Junction Box
- **Lane Controller (LC)**: A computer system for each type of toll lane that controls the lane equipment.
- **Manual Lane Terminal (or MLT)**: A device consisting of an array of touch screen buttons and associated electronics for processing toll transactions in the attended tollbooths.
- **MTA -** Maine Turnpike Authority
- **NTS -**Not to Scale
- **Paypoint Sensor** – Part of the Sensor Loop system. Detects when the vehicle has reached the lane paypoint, in this case the tollbooth door centerline.
- **Primary Sensor** – Part of the Sensor Loop system. Located between two gradient sensors, a 6’ x ‘6 square sensor that participates in vehicle classification.
- **Project:** shall mean the upgrade of the existing Toll Lanes to the toll collection system described in herein.
- **RMC -** Rigid Metallic Conduit
- **RP (Receipt Printer)** – Receipt printer that communicates with the payment system. Located in the booth.
- **Specifications**: shall mean the Technical Specification and instructions included in this document for the purpose of defining the installation procedures
- **SI (Systems Integrator) -** The systems integrator/contractor for the MTA toll system.
- **SS -** Stainless Steel
- **TCP (Traffic Control Pedestal)**: A pedestal to mount a traffic signal and screen with a message to patrons.

- **UPS** - Uninterrupted Power Supply
- **VES (Violation Enforcement System)** – Cameras that automatically capture digital photographic images of vehicles and their license plates.

APPENDIX D

PLAZA WORK CHECKLIST

PLAZA – WORK CHECKLIST

DATE SUBMITTED:		**DATE APPROVED:**				
REVISION #1:		**DATE APPROVED:**				
REVISION #2:		**DATE APPROVED:**				

PROPOSED EQUIPMENT	**PROPOSED LOCATION**	**POWER SOURCE**		**EXTRA WORK (Y/N)**	**APPRVL DATE**	**APPRVL BY**
		PANEL	**CIRCUIT**			
(2) AVI READERS						
(26) SENSOR LOOPS						
(2) DVAS CAMERA MOUNTS						
(2)LANE CONTROLLER CABINETS						
(12) VCARS CAMERAS						
(10) AVI ANTENNAS						
(2) LIGHTNING SUPPRESSION SYSTEMS						
(2) CANOPY LIGHTING SYSTEMS						

EXISTING TO REMAIN EQUIPMENT	**LOCATION**	**POWER SOURCE**		**EXTRA WORK (Y/N)**	**APPRVL DATE**	**APPRVL BY**
		PANEL	**CIRCUIT**			
(1) UPS IN TUNNEL						

EXISTING EQUIPMENT TO BE REMOVED	**LOCATION**	**POWER SOURCE**		**EXTRA WORK (Y/N)**	**APPRVL DATE**	**APPRVL BY**
		PANEL	**CIRCUIT**			
(4) ENTRY LOOPS						
(4) EXIT LOOPS						
(4) TREADLES						
(4) LIGHT CURTAIN						
(4) PATRON FARE DISPLAY						
(4) ISLAND TRAFFIC LIGHT						
(2) OVERHEAD SCANNER						
(4) CANOPY OVERRIDE SWITCH						
(6) RED/GREEN LIGHTS						
(2) RED LIGHTS						
(4) AVI ANTENNAS						
PORTION OF LIGHTNING SUPPRESSION SYSTEM						
PORTION OF CANOPY LIGHTING						

EXPLANATION OF ALL EXTRA WORK (USE ADDITIONAL SHEET IF REQUIRED)

APPENDIX E

PRODUCT DATA SHEETS

CHG3000S Series Specifications

Models

CHG3000S	Enclosure, environmental, 12.5-inch (31.75 cm) lower body length
CHG3000SHB	Enclosure, environmental, 12.5-inch (31.75 cm) lower body length. 24V thermostat controlled heater and blower

General

Maximum Camera and Lens Size	Accepts camera and lens combinations (including BNC connector) up to:
CHG3000S	11.5″L x 3.5″ W x 2.5″ H (29.21 cm x 8.89 cm x 6.35 cm)
CHG3000SHB	11.5″ L x 3.5″ W x 2.5″ H (29.21 cm x 8.89 cm x 6.35 cm)
Window Size	.11-inch (3.0 mm) thick tempered glass 2.42″ H x 2.65″ W (6.15 cm x 6.75 cm)
Construction	Die-cast, extruded, and sheet aluminum
Finish	Light-gray polyester power coat
Camera Mounting	Removable camera sled with adjustable height
Housing Mounting	Two (2) 1/4-20 tapped holes
Cable Entry	Two .35-inch (9.0 mm) glands on rear of housing
Rear Locking	Located at rear of housing; available for security lock
Environment	Indoor/outdoor: -10˚F to 120˚F (-23.33˚C to 48.89˚C)

Weight	Unit	Shipping
CHG3000S	2.70lb (1.23kg)	3.03lb (1.38kg)
CHG3000SHB	3.67lb (1.67kg)	4.18lb (1.90 kg)

Electrical

Input Voltage	24VAC, 50/60Hz lower body length

Power Consumption

Heater	Heater activates ON at 42-58˚F (6-14˚C) and OFF at 72-88˚F (22-31˚C), 20W, 0.83 Amp
Blower	Blower activates ON at 77-93˚F (25-34˚C) and OFF at 62-78˚F (17-26˚C), 2W, 0.08 Amp

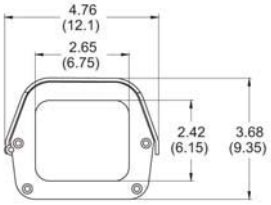

Optional Accessories

CHG3000-02	Heater kit, 24V, 20W, 0.83 Amp
CHG3000-03	Blower kit, 24V, 2W. 0.8 Amp

Note: Heater and Blower assemblies require O/I PCB BOARD assembly for connection.

Recommended Mounts

Wall	
CHG2700	Light duty wall mount. Max. load 20 lb (9.06kg)
Ceiling/Pedestal	
CHG2720	Medium duty celing "J" mount. Max. load 20 lb (9.06kg)

Design and specifications subject to change without notice.
Conversion: 1″ = 25.4mm
Measurement conversions are approximate.

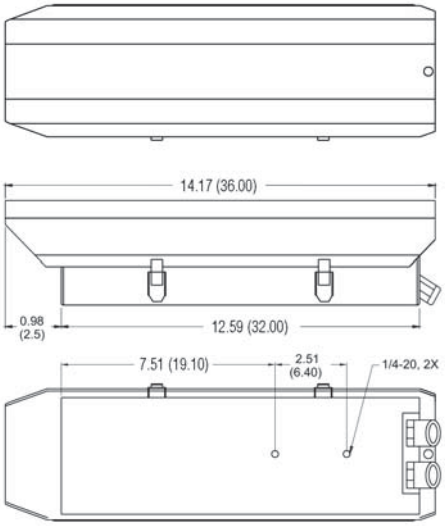

Unit: inch(cm)

Form CHG3000S-8/06

Costar VIDEO SYSTEMS, LLC
2720 Commodore Drive, Suite 150 • Carrollton, TX 75007 www.costarvideo.com
Tel: 972-446-8844 • 46-8866 • 1-888-694-STAR (7827)

EM1109/EM2000/EM2200 Mount

PIPE/POLE MOUNT, MEDIUM DUTY, ENCLOSURE

Product Features

- Low Cost
- Manually Adjustable Swivel Head
- Cable Feedthrough Hole
- Supports up to 40 lb (18.14 kg)
- Mounts on Vertical or Horizontal Pipe/Pole; Mounting Straps Included
- Compatible with Most Pelco Enclosures with a 2-Inch (5.08 cm) Mounting Pole Pattern

EM2200

The **EM1109/EM2000/EM2200** are medium duty enclosure mounts designed for applications where mounting on a pipe or pole is necessary. These mounts can be used with Pelco enclosures having a 2-inch (5.08 cm) mounting hole pattern and are capable of supporting up to 40 lb (18.14 kg). All three mounts feature a manually adjustable swivel head and a cable feedthrough hole to conceal wiring. Multiple mounting holes on the tilt table provide maximum 360-degree horizontal positioning of the enclosure.

The **EM1109** is a pedestal mount for use on a horizontal or vertical pipe or pole. The **EM2000** is a J-type mount for use on a vertical pipe or pole, and the **EM2200** is a "hook" type mount for use on a horizontal pipe or pole. The **EM1109/EM2000/EM2200** must be mounted on pipes or poles having a 3-inch (7.62 cm) to 8-inch (20.32 cm) diameter. Mounts are secured to the pipe or pole with stainless steel mounting straps. Two 1/4-20 mounting bolts required to secure the enclosure to the mount are also supplied.

The **EM1109/EM2000/EM2200** are constructed of aluminum and have a white epoxy powder coat finish.

EM2000

EM1109

TECHNICAL SPECIFICATIONS

MODELS

EM1109	Medium duty pedestal mount for horizontal or vertical pipe or pole applications. Manually adjustable swivel head and cable feedthrough hole.
EM2000	Medium duty 90 degree J-mount for vertical pipe or pole applications. Manually adjustable swivel head and cable feedthrough hole.
EM2200	Medium duty "hook" mount for horizontal pipe or pole applications. Manually adjustable swivel head and cable feedthrough hole.

MECHANICAL

Pan Adjustment	Unlimited 360°
Tilt Adjustment	±75°
Locking Method	3/8-16 hex head bolts (on manually adjustable swivel head)

GENERAL

Suggested Mounting Method	Slots provided for mounting straps; 3 stainless steel straps supplied. Straps fit 3-inch (7.62 cm) to 8-inch (20.32 cm) diameter pole.
Enclosure Mounting	2, 1/4-20 mounting bolts (supplied)
Maximum Load	40 lb (18.14 kg)
Construction	Aluminum
Finish	White epoxy polyester powder coat
Environment	Indoor/outdoor
Unit Weight	
EM1109	1.88 lb (0.85 kg)
EM2000	3.05 lb (1.38 kg)
EM2200	3.51 lb (1.59 kg)
Shipping Weight	
EM1109	3 lb (1.36 kg)
EM2000	8 lb (3.60 kg)
EM2200	9 lb (4.10 kg)

RECOMMENDED ENCLOSURES

Pelco enclosures having a 2-inch (5.08 cm) mounting hole pattern can be used with these mounts. Be sure the enclosure/camera/lens combination you select does not exceed 40 lb (18 kg) and is suitable for the type of mount you have selected. The following list indicates the most applicable enclosures.

EH3010/EH3014 Series
EH4010 EH4014 Series
EH3508 Series, Environmental
EH3512/EH3515 Series, Environmental
EH4700 Series, Environmental
EH4700DB Series, Environmental
E700 Series, Dust-Tight
EHX4E, Explosion-Proof
EH8100 Series, Pressurized

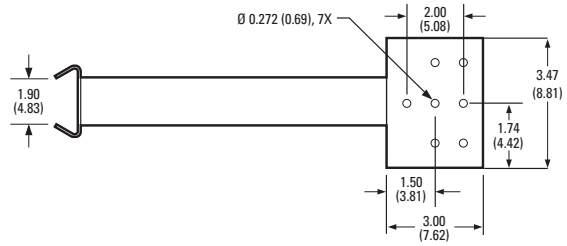

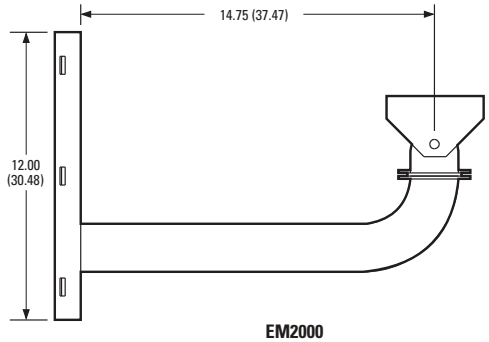

EM2000

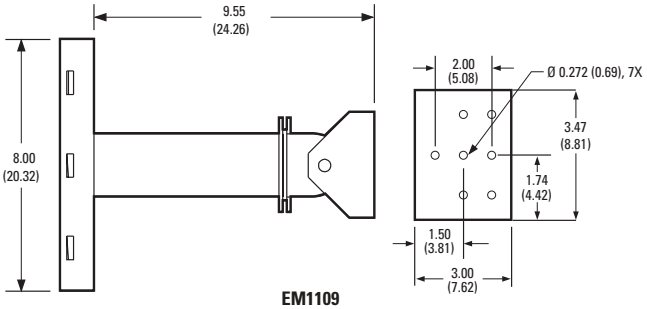

EM1109

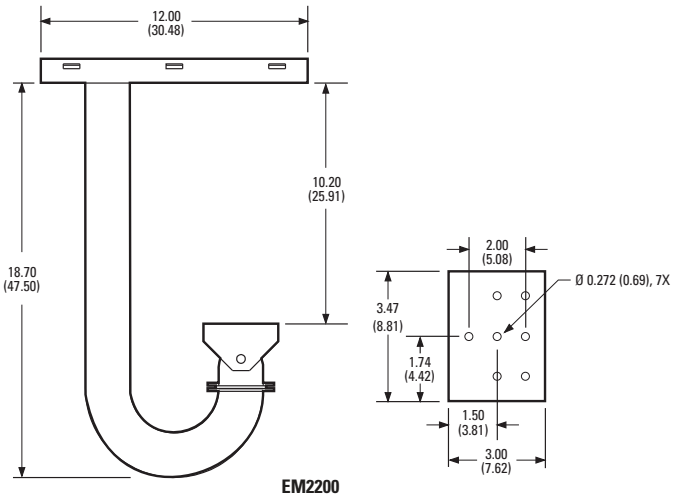

EM2200

NOTE: VALUES IN PARENTHESES ARE CENTIMETERS; ALL OTHERS ARE INCHES.

Pelco, Inc. Worldwide Headquarters:
3500 Pelco Way, Clovis, California 93612-5699 USA
USA & Canada Tel: (800) 289-9100 • FAX: (800) 289-9150
International Tel: +1 (559) 292-1981 • FAX: +1 (559) 348-1120
www.pelco.com

Pelco and the Pelco logo are registered trademarks of Pelco, Inc.
Product specifications and availability subject to change without notice.
©Copyright 2008, Pelco, Inc. All rights reserved.

LOCTITE®

Hysol® E-40FL™

December 200

PRODUCT DESCRIPTION

Hysol® E-40FL™ provides the following product characteristics:

Technology	Epoxy
Chemical Type (Resin)	Epoxy
Chemical Type (Hardener)	Polyamide
Appearance (Resin)	Off-white to beige liquid[LMS]
Appearance (Hardener)	Dark gray liquid[LMS]
Appearance (Mixed)	Gray, opaque liquid[LMS]
Components	Two component - requires mixing
Viscosity	Medium
Mix Ratio, by volume - Resin : Hardener	1 : 1
Mix Ratio, by weight - Resin : Hardener	100 : 85
Cure	Room temperature cure after mixing
Application	Bonding

Hysol® E-40FL™ is a toughened, medium viscosity, industrial grade epoxy adhesive with a medium working life. Once mixed, the two component epoxy cures at room temperature to form a flexible, gray bondline with excellent resistance to shock and impact. When fully cured, the epoxy is resistant to a wide range of chemicals and solvents, and acts as an excellent electrical insulator. Typical applications include bonding plastic, metal, glass, wood, ceramic, rubber, and masonry materials where flexibility is required. Suited for low-stress, high-impact bonding applications of dissimilar materials. Hysol® E-40FL™ can also be used for repairing strain gauges, sealing seams on fiberglass components, repairing printed circuit boards, bonding stainless steel inserts, and rubber hose to steel tubing.

TYPICAL PROPERTIES OF UNCURED MATERIAL

Resin:

Specific Gravity @ 25 °C	1.3
Flash Point - See MSDS	
Viscosity, Brookfield - RVT, 25 °C, mPa·s (cP):	
Spindle 7, speed 10 rpm	60,000 to 90,000[LMS]

Hardener:

Specific Gravity @ 25 °C	1.1
Flash Point - See MSDS	
Viscosity, Brookfield - RVT, 25 °C, mPa·s (cP):	
Spindle 7, speed 10 rpm	50,000 to 85,000[LMS]

Mixed:

Specific Gravity @ 25 °C	1.2
Working life, minutes	40
Tack Free Time minutes	130

TYPICAL CURING PERFORMANCE

Cure Speed vs. Time

The graph below shows shear strength developed with time on abraded, acid etched aluminum lapshears @ 25 °C with ar average bondline gap of 0.1 to 0.2 mm and tested according tc ISO 4587.

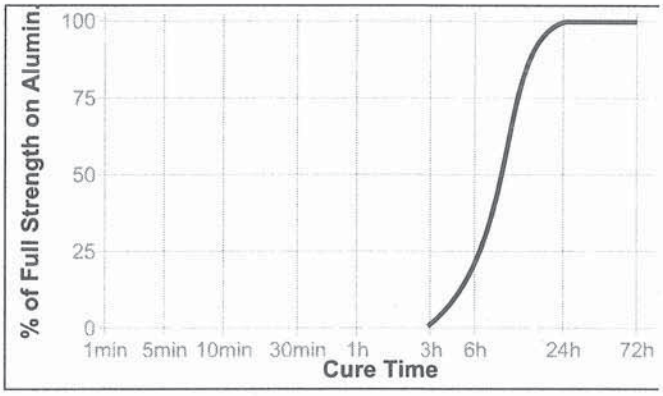

TYPICAL PROPERTIES OF CURED MATERIAL

Cured @ 25 °C

Physical Properties:

Glass Transition Temperature (Tg), °C		30
Shore Hardness, ISO 868, Durometer D		75
Elongation, ISO 527-2, %		22
Tensile Strength, ISO 527-2	N/mm²	16
	(psi)	(3,210)

Electrical Properties:

Dielectric Breakdown Strength, IEC 60243-1, kV/mm	16

TYPICAL PERFORMANCE OF CURED MATERIAL

Adhesive Properties

Cured for 3 days @ 22 °C

Lap Shear Strength, ISO 4587:

Steel (grit blasted)	N/mm²	4.4
	(psi)	(640)
Aluminum (acid etched & abraded), 0.1 to 0.2 mm gap	N/mm²	25.9
	(psi)	(3,750)
Aluminum (anodised)	N/mm²	6.3
	(psi)	(920)
Stainless steel	N/mm²	5.2
	(psi)	(760)
Polycarbonate	N/mm²	2.3
	(psi)	(330)
Nylon	N/mm²	2.6
	(psi)	(380)
Wood (Fir)	N/mm²	6.6
	(psi)	(960)

Block Shear Strength, ISO 13445:

PVC	N/mm²	2.8
	(psi)	(400)
ABS	N/mm²	3.1
	(psi)	(450)
Epoxy	N/mm²	11
	(psi)	(1,600)
Acrylic	N/mm²	3.2
	(psi)	(460)
Glass	N/mm²	12.9
	(psi)	(1,860)

Cured for 2 hours @ 65 °C
Lap Shear Strength, ISO 4587:

Aluminum (acid etched) 0.13 mm gap	N/mm²	≥6.9[LMS]
	(psi)	(≥1,000)

TYPICAL ENVIRONMENTAL RESISTANCE

Cured for 12 hours @ 65 °C followed by 4 hours @ 22 °C
Lap Shear Strength, ISO 4587:
Aluminum (acid etched & abraded), 0.1 to 0.2 mm gap

Hot Strength

Tested at temperature

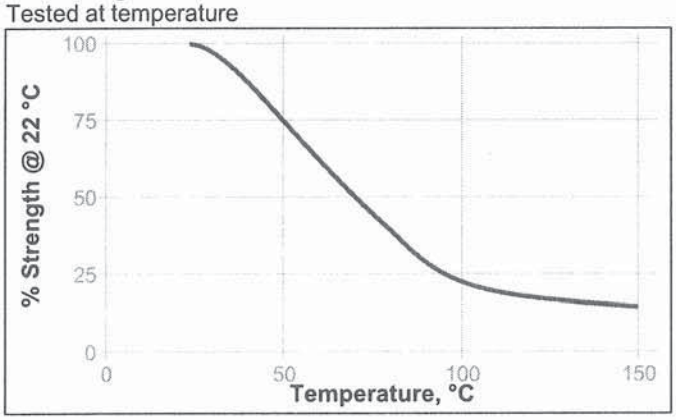

Cured for 5 days @ 22 °C
Lap Shear Strength, ISO 4587:
Steel

Heat Aging

Aged at temperature indicated and tested @ 22 °C

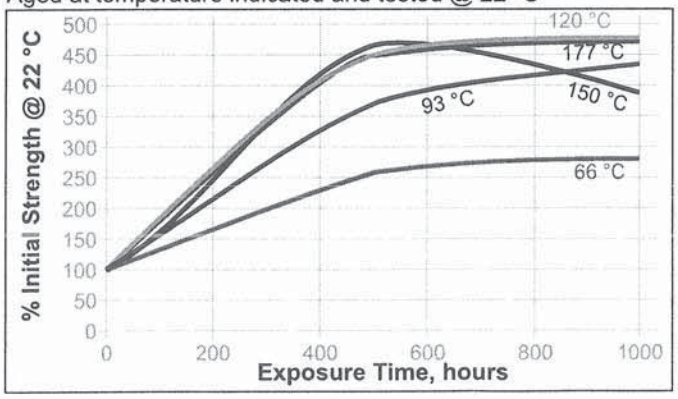

Chemical/Solvent Resistance

Aged under conditions indicated and tested @ 22 °C.

		% of initial strength	
Environment	**°C**	**500 h**	**1000 h**
Air	87	195	248
Motor oil (10W30)	87	269	215
Unleaded gasoline	87	61	73
Water/glycol 50/50	87	235	134
Salt fog	22	25	5
95% RH	38	60	64
Condensing Humidity	49	61	54
Water	22	50	0
Acetone	22	0	0
Isopropanol	22	68	61

GENERAL INFORMATION

This product is not recommended for use in pure oxygen and/or oxygen rich systems and should not be selected as a sealant for chlorine or other strong oxidizing materials.

For safe handling information on this product, consult the Material Safety Data Sheet (MSDS).

Directions for use

1. For high strength structural bonds, remove surface contaminants such as paint, oxide films, oils, dust, mold release agents and all other surface contaminants.
2. Use gloves to minimize skin contact. DO NOT use solvents for cleaning hands.
3. **Dual Cartridges:** To use simply insert the cartridge into the application gun and start the plunger into the cylinders using light pressure on the trigger. Next, remove the cartridge cap and expel a small amount of adhesive to be sure both sides are flowing evenly and freely. If automatic mixing of resin and hardener is desired, attach the mixing nozzle to the end of the cartridge and begin dispensing the adhesive. For hand mixing, expel the desired amount of the adhesive and mix thoroughly. Mix for approximately 15 seconds after uniform color is obtained.
   Bulk Containers: Mix thoroughly by weight or volume in the proportions specified in Product Description section. Mix vigorously, approximately 15 seconds after uniform color is obtained.
4. For maximum bond strength apply adhesive evenly to both surfaces to be joined.
5. Application to the substrates should be made within 40 minutes. Larger quantities and/or higher temperatures will reduce this working time.
6. Join the adhesive coated surfaces and allow to cure at 25 °C for 24 hours for high strength. Heat up to 93 °C, will speed curing.
7. Keep parts from moving during cure. Contact pressure is neccesary. Maximum shear strength is obtained with a 0.1 to 0.2 mm bond line.
8. Excessive uncured adhesive can be cleaned up with ketone type solvents.

Loctite Material Specification[LMS]
LMS dated July 19, 2001 (Resin) and LMS dated July 19, 2001 (Hardener). Test reports for each batch are available for the indicated properties. LMS test reports include selected QC test parameters considered appropriate to specifications for customer use. Additionally, comprehensive controls are in place to assure product quality and consistency. Special customer specification requirements may be coordinated through Henkel Loctite Quality.

Storage
Store product in the unopened container in a dry location. Storage information may be indicated on the product container labeling.
Optimal Storage: 8 °C to 21 °C. Storage below 8 °C or greater than 28 °C can adversely affect product properties. Material removed from containers may be contaminated during use. Do not return product to the original container. Henkel Corporation cannot assume responsibility for product which has been contaminated or stored under conditions other than those previously indicated. If additional information is required, please contact your local Technical Service Center or Customer Service Representative.

Conversions
(°C x 1.8) + 32 = °F
kV/mm x 25.4 = V/mil
mm / 25.4 = inches
µm / 25.4 = mil
N x 0.225 = lb
N/mm x 5.71 = lb/in
N/mm² x 145 = psi
MPa x 145 = psi
N·m x 8.851 = lb·in
N·m x 0.738 = lb·ft
N·mm x 0.142 = oz·in
mPa·s = cP

Note
The data contained herein are furnished for information only and are believed to be reliable. We cannot assume responsibility for the results obtained by others over whose methods we have no control. It is the user's responsibility to determine suitability for the user's purpose of any production methods mentioned herein and to adopt such precautions as may be advisable for the protection of property and of persons against any hazards that may be involved in the handling and use thereof. In light of the foregoing, **Henkel Corporation specifically disclaims all warranties expressed or implied, including warranties of merchantability or fitness for a particular purpose, arising from sale or use of Henkel Corporation's products. Henkel Corporation specifically disclaims any liability for consequential or incidental damages of any kind, including lost profits.** The discussion herein of various processes or compositions is not to be interpreted as representation that they are free from domination of patents owned by others or as a license under any Henkel Corporation patents that may cover such processes or compositions. We recommend that each prospective user test his proposed application before repetitive use, using this data as a guide. This product may be covered by one or more United States or foreign patents or patent applications.

Trademark usage
Except as otherwise noted, all trademarks in this documen are trademarks of Henkel Corporation in the U.S. an elsewhere. ® denotes a trademark registered in the U.S Patent and Trademark Office.

Reference 0.0

Material Safety Data Sheet

Henkel

Revision Number: 002.1

Issue date: 01/26/2010

1. PRODUCT AND COMPANY IDENTIFICATION

Product name: UNITED TOLL EPX RESIN
Product type: Epoxy resin

IDH number: 744608
Item number: 40486
Region: United States

Company address:
Henkel Corporation
One Henkel Way
Rocky Hill, Connecticut 06067

Contact information:
Telephone: 860.571.5100
Emergency telephone: 860.571.5100
Internet: www.henkelna.com

2. HAZARDS IDENTIFICATION

EMERGENCY OVERVIEW

Physical state: Liquid
Color: Light
Odor: Faint, Epoxy

HMIS:
HEALTH: 2
FLAMMABILITY: 1
PHYSICAL HAZARD: 0
Personal Protection: See MSDS Section 8

WARNING: MAY CAUSE ALLERGIC SKIN REACTION.
MAY CAUSE EYE, SKIN AND RESPIRATORY TRACT IRRITATION.

Relevant routes of exposure: Skin, Inhalation, Eyes

Potential Health Effects

Inhalation: May cause respiratory tract irritation.
Skin contact: May cause allergic skin reaction. May cause skin irritation. Burning sensation. Itching. Redness. Swelling.
Eye contact: May cause irritation. Direct contact may cause temporary redness and discomfort.
Ingestion: Not a relevant route of exposure.

Existing conditions aggravated by exposure: Skin allergies. Skin disorders. Respiratory disorders.

This material is considered hazardous by the OSHA Hazard Communication Standard (29 CFR 1910.1200).

See Section 11 for additional toxicological information.

3. COMPOSITION / INFORMATION ON INGREDIENTS

Hazardous components	CAS NUMBER	%
Epichlorohydrin-4,4'-isopropylidene diphenol resin	25068-38-6	60 - 100
Kaolin	1332-58-7	10 - 30

4. FIRST AID MEASURES

Inhalation: Move to fresh air. If not breathing, give artificial respiration. If breathing is difficult, give oxygen. If symptoms develop and persist, get medical attention.

Skin contact: Immediately flush skin with plenty of water (using soap, if available). Remove contaminated clothing and footwear. If symptoms develop and persist, get medical attention. Wash clothing before reuse. Thoroughly clean shoes before reuse.

Eye contact: Immediately flush eyes with plenty of water for at least 15 minutes. Get medical attention.

Ingestion: DO NOT induce vomiting unless directed to do so by medical personnel. Never give anything by mouth to an unconscious person. Get medical attention.

5. FIRE FIGHTING MEASURES

Flash point: > 93 °C (> 199.4 °F) Setaflash Closed Cup

Autoignition temperature: Not available

Flammable/Explosive limits - lower: Not available

Flammable/Explosive limits - upper: Not available

Extinguishing media: Water spray (fog), foam, dry chemical or carbon dioxide.

Special firefighting procedures: Wear self-contained breathing apparatus and full protective clothing, such as turn-out gear.

Unusual fire or explosion hazards: None expected.

Hazardous combustion products: Acids. Aldehydes. Irritating organic vapours. Oxides of carbon.

6. ACCIDENTAL RELEASE MEASURES

Use personal protection recommended in Section 8, isolate the hazard area and deny entry to unnecessary and unprotected personnel.

Environmental precautions: Do not allow product to enter sewer or waterways.

Clean-up methods: Soak up with inert absorbent material (e.g. sand, silica gel, acid binder, universal binder, sawdust). Scrape up spilled material and place in a closed container for disposal.

7. HANDLING AND STORAGE

Handling: Use only with adequate ventilation. Keep container closed. Prevent contact with eyes, skin and clothing. Do not breathe vapor and mist. Wash thoroughly after handling.

Storage: Keep in a cool, well ventilated area away from heat, sparks and open flame. Keep container tightly closed until ready for use.

For information on product shelf life contact Henkel Customer Service at (800) 243-4874.

8. EXPOSURE CONTROLS / PERSONAL PROTECTION

Employers should complete an assessment of all workplaces to determine the need for, and selection of, proper exposure controls and protective equipment for each task performed.

Hazardous components	ACGIH TLV	OSHA PEL	AIHA WEEL	OTHER
Epichlorohydrin-4,4'-isopropylidene diphenol resin	None	None	None	None
Kaolin	2 mg/m3 TWA Respirable fraction.	5 mg/m3 TWA Respirable fraction. 15 mg/m3 TWA Total dust.	None	None

Engineering controls: Use local ventilation if general ventilation is insufficient to maintain vapor concentration below established exposure limits.

Respiratory protection:	Use NIOSH approved respirator if there is potential to exceed exposure limit(s).
Eye/face protection:	Safety goggles or safety glasses with side shields.
Skin protection:	Use impermeable gloves and protective clothing as necessary to prevent skin contact. Butyl rubber gloves.

9. PHYSICAL AND CHEMICAL PROPERTIES

Physical state:	Liquid
Color:	Light
Odor:	Faint, Epoxy
Odor threshold:	Not available
pH:	Not available
Vapor pressure:	Not available
Boiling point/range:	> 250 °C (> 482°F)
Melting point/ range:	Not available
Vapor density:	Not available
Flash point:	> 93 °C (> 199.4 °F) Setaflash Closed Cup
Flammable/Explosive limits - lower:	Not available
Flammable/Explosive limits - upper:	Not available
Autoignition temperature:	Not available
Evaporation rate:	Not available
Solubility in water:	Negligible
Partition coefficient (n-octanol/water):	Not available
VOC content:	< 1 %; < 10 g/l Estimated

10. STABILITY AND REACTIVITY

Stability:	Stable under normal conditions of storage and use.
Hazardous reactions:	Will not occur.
Hazardous decomposition products:	Oxides of carbon. Hydrocarbons. Phenolics.
Incompatible materials:	Strong oxidizing agents. Amines. Acids. Bases.
Conditions to avoid:	Avoid temperatures above 149°C (300°F).

11. TOXICOLOGICAL INFORMATION

Hazardous components	NTP Carcinogen	IARC Carcinogen	OSHA Carcinogen (Specifically Regulated)
Epichlorohydrin-4,4'-isopropylidene diphenol resin	No	No	No
Kaolin	No	No	No

Hazardous components	Health Effects/Target Organs
Epichlorohydrin-4,4'-isopropylidene diphenol resin	Allergen, Irritant
Kaolin	Nuisance dust

12. ECOLOGICAL INFORMATION

Ecological information:	Not available

13. DISPOSAL CONSIDERATIONS

Information provided is for unused product only.

Recommended method of disposal:	Follow all local, state, federal and provincial regulations for disposal.
Hazardous waste number:	Not a RCRA hazardous waste.

14. TRANSPORT INFORMATION

The shipping classifications in this sections are for non-bulk packaging only (unless otherwise specified). Shipping classification may be different for bulk packaging.

U.S. Department of Transportation Ground (49 CFR)

Proper shipping name:	Not regulated
Hazard class or division:	None
Identification number:	None
Packing group:	None

International Air Transportation (ICAO/IATA)

Proper shipping name:	Environmentally hazardous substance, liquid, n.o.s. (Bisphenol-A Epichlorhydrine resin)
Hazard class or division:	9
Identification number:	UN 3082
Packing group:	III

Water Transportation (IMO/IMDG)

Proper shipping name:	ENVIRONMENTALLY HAZARDOUS SUBSTANCE, LIQUID, N.O.S. (Bisphenol-A Epichlorhydrine resin)
Hazard class or division:	9
Identification number:	UN 3082
Packing group:	III
Marine pollutant:	Bisphenol-A Epichlorhydrine resin

15. REGULATORY INFORMATION

United States Regulatory Information

TSCA 8 (b) Inventory Status:	All components are listed or are exempt from listing on the Toxic Substances Control Act Inventory.
TSCA 12(b) Export Notification:	None above reporting de minimus
CERCLA/SARA Section 302 EHS:	None above reporting de minimus
CERCLA/SARA Section 311/312:	Immediate Health
CERCLA/SARA 313:	None above reporting de minimus
California Proposition 65:	This product contains a chemical known in the State of California to cause cancer.

Canada Regulatory Information

CEPA DSL/NDSL Status:	All components are listed on or are exempt from listing on the Canadian Domestic Substances List.
WHMIS hazard class:	D.2.B

16. OTHER INFORMATION

This material safety data sheet contains changes from the previous version in sections: New Material Safety Data Sheet format., This Material Safety Data Sheet contains changes from the previous version in Section(s): 2, 5, 10, 14, 15

Prepared by: Rena Petrides, Regulatory Affairs Specialist

DISCLAIMER: The data contained herein are furnished for information only and are believed to be reliable. However, Henkel Corporation does not assume responsibility for any results obtained by persons over whose methods Henkel Corporation has no control. It is the user's responsibility to determine the suitability of Henkel's products or any production methods mentioned herein for a particular purpose, and to adopt such precautions as may be advisable for the protection of property and persons against any hazards that may be involved in the handling and use of any of Henkel Corporation's products. In light of the foregoing, Henkel Corporation specifically disclaims all warranties, express or implied, including warranties of merchantability and fitness for a particular purpose, arising from sale or use of Henkel Corporation's products. Henkel Corporation further disclaims any liability for consequential or incidental damages of any kind, including lost profits.

Material Safety Data Sheet

Henkel

Revision Number: 002.1

Issue date: 05/07/2009

1. PRODUCT AND COMPANY IDENTIFICATION

Product name: UNITED TOLL EPX HARD 18.9L
Product type: Epoxy Hardener

Company address:

IDH number: 744609
Item number: 40487
Region: United States
Contact information:
Not available
Emergency telephone: 860.571.5100

2. HAZARDS IDENTIFICATION

EMERGENCY OVERVIEW

Physical state: Liquid
Color: Gray
Odor: Mild

HMIS:

HEALTH:	*2
FLAMMABILITY:	1
PHYSICAL HAZARD:	0
Personal Protection:	See MSDS Section 8

WARNING: CAUSES EYE AND SKIN IRRITATION.
MAY CAUSE RESPIRATORY TRACT IRRITATION.

Relevant routes of exposure: Skin, Inhalation, Eyes

Potential Health Effects

Inhalation: May cause respiratory tract irritation.
Skin contact: Causes skin irritation.
Eye contact: Causes eye irritation.
Ingestion: Not a relevant route of exposure.

Existing conditions aggravated by exposure: Eye, skin, and respiratory disorders. Skin allergies.

This material is considered hazardous by the OSHA Hazard Communication Standard (29 CFR 1910.1200).

See Section 11 for additional toxicological information.

3. COMPOSITION / INFORMATION ON INGREDIENTS

Hazardous components	CAS NUMBER	%
Al-silicate Kaolin	1332-58-7	10 - 30
Salicylic acid	69-72-7	1 - 5
Glycerol	56-81-5	1 - 5
2,4,6-Tris(dimethylaminomethyl)phenol	90-72-2	1 - 5
Silica, amorphous, fumed, crystal-free	112945-52-5	1 - 5

4. FIRST AID MEASURES

Inhalation: Move to fresh air. If not breathing, give artificial respiration. If breathing is difficult, give oxygen. Get medical attention.

Skin contact: Immediately flush skin with plenty of water (using soap, if available). Remove contaminated clothing and footwear. Thoroughly clean shoes before reuse. Get medical attention.

Eye contact:	Immediately flush eyes with plenty of water for at least 15 minutes. Get medical attention.
Ingestion:	DO NOT induce vomiting unless directed to do so by medical personnel. Never give anything by mouth to an unconscious person. Get medical attention.

5. FIRE FIGHTING MEASURES

Flash point:	> 93 °C (> 199.4 °F) Setaflash Closed Cup
Autoignition temperature:	Not available
Flammable/Explosive limits - lower:	Not available
Flammable/Explosive limits - upper:	Not available
Extinguishing media:	Foam, dry chemical or carbon dioxide.
Special firefighting procedures:	Wear self-contained breathing apparatus and full protective clothing, such as turn-out gear.
Unusual fire or explosion hazards:	Personnel in vicinity and downwind should be evacuated.
Hazardous combustion products:	Ammonia. Nitric acid. Oxides of carbon. Oxides of nitrogen. Irritating organic fragments.

6. ACCIDENTAL RELEASE MEASURES

Use personal protection recommended in Section 8, isolate the hazard area and deny entry to unnecessary and unprotected personnel.

Environmental precautions:	Do not allow product to enter sewer or waterways.
Clean-up methods:	Immediately contact emergency personnel. Ensure adequate ventilation. Soak up with inert absorbent material (e.g. sand, silica gel, acid binder, universal binder, sawdust). Scrape up spilled material and place in a closed container for disposal.

7. HANDLING AND STORAGE

Handling:	Prevent contact with eyes, skin and clothing. Do not breathe vapor and mist. Wash thoroughly after handling. Keep container closed. Use only with adequate ventilation.
Storage:	Keep in a cool, well ventilated area away from heat, sparks and open flame. Keep container tightly closed until ready for use. Do not store near acids. Do not store in reactive metal containers.

For information on product shelf life contact Henkel Customer Service at (800) 243-4874.

8. EXPOSURE CONTROLS / PERSONAL PROTECTION

Employers should complete an assessment of all workplaces to determine the need for, and selection of, proper exposure controls and protective equipment for each task performed.

Hazardous components	ACGIH TLV	OSHA PEL	AIHA WEEL	OTHER
Al-silicate Kaolin	2 mg/m3 TWA Respirable fraction.	5 mg/m3 TWA Respirable fraction. 15 mg/m3 TWA Total dust.	None	None
Salicylic acid	None	None	None	None
Glycerol	10 mg/m3 TWA Mist.	15 mg/m3 TWA Total dust. 5 mg/m3 TWA Respirable fraction.	None	None
2,4,6-Tris(dimethylaminomethyl)phenol	None	None	None	None
Silica, amorphous, fumed, crystal-free	10 mg/m3 TWA Inhalable dust. 3 mg/m3 TWA Respirable fraction.	20 MPPCF TWA 0.8 mg/m3 TWA	None	None

Engineering controls: Local exhaust ventilation is recommended when general ventilation is not sufficient to control airborne contamination.

Respiratory protection: Use NIOSH approved respirator if there is potential to exceed exposure limit(s).

Eye/face protection: Safety goggles or safety glasses with side shields.

Skin protection: Chemical resistant, impermeable gloves. Butyl rubber gloves.

9. PHYSICAL AND CHEMICAL PROPERTIES

Physical state: Liquid
Color: Gray
Odor: Mild
Odor threshold: Not available
pH: Not available
Vapor pressure: Not available
Boiling point/range: Not available
Melting point/ range: Not available
Vapor density: Not available
Flash point: > 93 °C (> 199.4 °F) Setaflash Closed Cup
Flammable/Explosive limits - lower: Not available
Flammable/Explosive limits - upper: Not available
Autoignition temperature: Not available
Evaporation rate: Not available
Solubility in water: Partially soluble
Partition coefficient (n-octanol/water): Not available
VOC content: < 1 %; < 10 g/l

10. STABILITY AND REACTIVITY

Stability: Stable

Hazardous reactions: Will not occur.

Hazardous decomposition products: Ammonia. Oxides of carbon. Oxides of nitrogen. Nitric acid. Irritating organic fragments.

Incompatible materials: Strong oxidizing agents. Organic acids. Mineral acids. Bases. Halogenated compounds. This product slowly corrodes copper, aluminum, zinc and galvanized surfaces.

Conditions to avoid: Direct sources of heat. Store away from incompatible materials.

11. TOXICOLOGICAL INFORMATION

Hazardous components	NTP Carcinogen	IARC Carcinogen	OSHA Carcinogen (Specifically Regulated)
Al-silicate Kaolin	No	No	No
Salicylic acid	No	No	No
Glycerol	No	No	No
2,4,6-Tris(dimethylaminomethyl)phenol	No	No	No
Silica, amorphous, fumed, crystal-free	No	No	No

Hazardous components	Health Effects/Target Organs
Al-silicate Kaolin	Nuisance dust
Salicylic acid	Irritant
Glycerol	Blood, Irritant, Kidney, Nuisance dust
2,4,6-Tris(dimethylaminomethyl)phenol	Irritant, Allergen
Silica, amorphous, fumed, crystal-free	Nuisance dust

12. ECOLOGICAL INFORMATION

Ecological information: Not available

13. DISPOSAL CONSIDERATIONS

Information provided is for unused product only.

Recommended method of disposal: Follow all local, state, federal and provincial regulations for disposal.

Hazardous waste number: Not a RCRA hazardous waste.

14. TRANSPORT INFORMATION

The shipping classifications in this sections are for non-bulk packaging only (unless otherwise specified). Shipping classification may be different for bulk packaging.

U.S. Department of Transportation Ground (49 CFR)

Proper shipping name: Not regulated
Hazard class or division: None
Identification number: None
Packing group: None

International Air Transportation (ICAO/IATA)

Proper shipping name: Not regulated
Hazard class or division: None
Identification number: None
Packing group: None

Water Transportation (IMO/IMDG)

Proper shipping name: Not regulated
Hazard class or division: None
Identification number: None
Packing group: None

15. REGULATORY INFORMATION

United States Regulatory Information

TSCA 8 (b) Inventory Status: All components are listed or are exempt from listing on the Toxic Substances Control Act Inventory.
TSCA 12(b) Export Notification: None above reporting de minimus

CERCLA/SARA Section 302 EHS: None above reporting de minimus
CERCLA/SARA Section 311/312: Immediate Health, Delayed Health

CERCLA/SARA 313:	None above reporting de minimus
California Proposition 65:	This product contains a chemical known in the State of California to cause cancer. This product contains a chemical known to the State of California to cause birth defects or other reproductive harm.

Canada Regulatory Information

CEPA DSL/NDSL Status:	All components are listed on or are exempt from listing on the Canadian Domestic Substances List.
WHMIS hazard class:	D.2.A, D.2.B

16. OTHER INFORMATION

This material safety data sheet contains changes from the previous version in sections: New Material Safety Data Sheet format.

Prepared by: Gary Pierson, Sr. Regulatory Affairs Specialist

DISCLAIMER: The data contained herein are furnished for information only and are believed to be reliable. However, Henkel Corporation does not assume responsibility for any results obtained by persons over whose methods Henkel Corporation has no control. It is the user's responsibility to determine the suitability of Henkel's products or any production methods mentioned herein for a particular purpose, and to adopt such precautions as may be advisable for the protection of property and persons against any hazards that may be involved in the handling and use of any of Henkel Corporation's products. In light of the foregoing, Henkel Corporation specifically disclaims all warranties, express or implied, including warranties of merchantability and fitness for a particular purpose, arising from sale or use of Henkel Corporation's products. Henkel Corporation further disclaims any liability for consequential or incidental damages of any kind, including lost profits.

PRODUCT DATA

W. R. MEADOWS SEALTIGHT

CSI Code: 03 15 00

NO. 323

AUGUST 2009
(Supersedes April 2004)

CERAMAR®

Flexible Foam Expansion Joint

DESCRIPTION

CERAMAR is a flexible foam expansion joint filler composed of a unique synthetic foam of isomeric polymers in a very small, closed-cell structure. Gray in color, CERAMAR is a lightweight, flexible, highly resilient material offering recovery qualities of over 99%. The compact, closed-cell structure will absorb almost no water.

USES

CERAMAR flexible foam expansion joint filler provides an excellent joint filler and back-up material for use in either horizontal or vertical applications where expansion and contraction movements must be accommodated. CERAMAR is compatible with all currently popular cold-applied sealants, caulks, and hot-pour joint sealing compounds. It is lightweight and easy to cut or form in the field without waste.

CERAMAR compresses easily for use with shrinkage-compensating concrete and it may be used to relieve stress and pressure in concrete pavements.

LEED INFORMATION

May help contribute to LEED credits:

- MR Credit 5.1: Regional Materials: 10% Extracted, Processed & Manufactured Regionally
- MR Credit 5.2: Regional Materials: 20% Extracted, Processed & Manufactured Regionally

FEATURES/BENEFITS

- May be sealed with hot- or cold-applied sealants.
- User friendly, lightweight, flexible foam ... forms or wraps around curved or circular surfaces.
- Cuts easily on the job with a razor knife ... no breakage or waste.
- Offers high resiliency and 99% recovery qualities ... low compression values ... non-extruding ... minimal water absorption.
- Resists ultraviolet degradation ... will not rot or deteriorate.
- Non-impregnated ... no staining or bleeding.
- Bonds easily with common cartridge adhesives.
- Non-gassing.

SPECIFICATIONS

- ASTM D 5249, Type 2
- ASTM D 1752, Sections 5.1 - 5.4, with compression requirement modified to 10 psi (7.03 g/mm^2) minimum and 25 psi (17.58 g/mm^2) maximum.
- ASTM D 7174-05

TECHNICAL DATA*

Compression, 50%	13 psi (9 g/mm^2) 89.6 kPa
Extrusion	0.1 inch (2.5 mm)
Recovery	99.21%
Water absorption, volume %	0.246

Test Method - ASTM D 545 [1/2" (12.7 mm) thick test specimen]
* All technical data is typical information, but may vary due to test methods, conditions, and operators.

CONTINUED ON REVERSE SIDE…

W. R. MEADOWS, INC.
P.O. Box 338 • HAMPSHIRE, IL 60140-0338
Phone: 847/214-2100 • Fax: 847/683-4544
1-800-342-5976
www.wrmeadows.com

HAMPSHIRE, IL / CARTERSVILLE, GA / YORK, PA
FORT WORTH, TX / BENICIA, CA / POMONA, CA
GOODYEAR, AZ / MILTON, ON / ST. ALBERT, AB

PACKAGING

Furnished in standard sheets 48" (1.22 m) wide, 10' (3.05m) long. Also available in precut widths of 2" - 46" (50.8 mm - 1.17 m).

Thickness	Approx. Wt./100 ft.^{2}	Approx. Wt./100 m^2	Pcs. per Bundle	Shipping Wt./Bundle
1/4" (6.4 mm)	3.13 lb.	15.29 kg	100	160 lb. (72.58 kg)
3/8" (9.5 mm)	4.70 lb.	22.93 kg	100	240 lb. (108.86 kg)
1/2" (12.7 mm)	6.25 lb.	30.52 kg	75	250 lb. (113.40 kg)
3/4" (19.1 mm)	9.40 lb.	45.90 kg	50	240 lb. (108.86 kg)
1" (25.4 mm)	12.50 lb.	61.03 kg	40	260 lb. (117.94 kg)

APPLICATION

For horizontal applications, position CERAMAR against the forms, at interrupting columns and objects or adjacent to abutting structures, before placing the concrete. Vertical applications may call for CERAMAR to be placed between panels, panel-to-column joints, or in block wall joints prior to sealing. CERAMAR may be used with all hot- and cold-applied sealants.

PRECAUTIONS

Due to its light weight, CERAMAR will float and must be held in place by compression or with a sealant.

HEALTH AND SAFETY

Refer to Material Safety Data Sheet (MSDS) for complete health and safety information.

For most current data sheet, further LEED information, and MSDS, visit www.wrmeadows.com.

LIMITED WARRANTY

"W. R. MEADOWS, INC. warrants at the time and place we make shipment, our material will be of good quality and will conform with our published specifications in force on the date of acceptance of the order." Read complete warranty. Copy furnished upon request.

Disclaimer

The information contained herein is included for illustrative purposes only, and to the best of our knowledge, is accurate and reliable. W. R. MEADOWS, INC. cannot however under any circumstances make any guarantee of results or assume any obligation or liability in connection with the use of this information. As W. R. MEADOWS, INC. has no control over the use to which others may put its product, it is recommended that the products be tested to determine if suitable for specific application and/or our information is valid in a particular circumstance. Responsibility remains with the architect or engineer, contractor and owner for the design, application and proper installation of each product. Specifier and user shall determine the suitability of products for specific application and assume all responsibilities in connection therewith.

© W. R. MEADOWS 2003

Direct-View LED Traffic Controller
DOT2424RG-175

PRODUCT NUMBER
5651

CABINET DIMENSIONS
24" H x 24" W x 5" D

ILLUMINATION SOURCE
Super bright, narrow viewing angle LEDs
Available in green, red, blue, amber, and white LEDs
Messages "blankout" when turned off, eliminating confusion
Long life, solid state lighting

ELECTRICAL
Integrated solid state power supply
Photocell for auto photodimming
Standard Voltage: 120 VAC, Optional Voltages: 9-36 V, 240 VAC, 277 VAC
Maximum amps per lighted message (at 120 V) shown in the table below
UL/CUL approved for wet locations

CONSTRUCTION
Faces: Single Faced Sign
Cabinet: (DOT): NEMA 4X Rated, 1/8" wall T5052 aluminum cabinet with continuously welded seams. Optional Visor
Door: Continuous hinge with a 1" x 1/4" silicone gasket and stainless steel tool free door latches
Face Material: Impact resistant, 1/4" thick smoke tinted polycarbonate

FINISH
Standard Cabinet Color: Black
Custom colors available upon request

MESSAGE	COLOR	HEIGHT	AMPS
X	30° Red Round	18.0"	0.17
Down Arrow	30° Green Round	18.0"	0.13

Trans-Tech
4999 Pittsburgh Ave.
Erie, PA 16509
Phone: (888) 811-7010
Fax: (814) 836-8401
Email: sales@transportation-tech.com
Website: www.transportation-tech.com

Proudly Made in the USA

Product View

NOTE: Sign image may not exactly represent the finished product. For illustration purposes only.

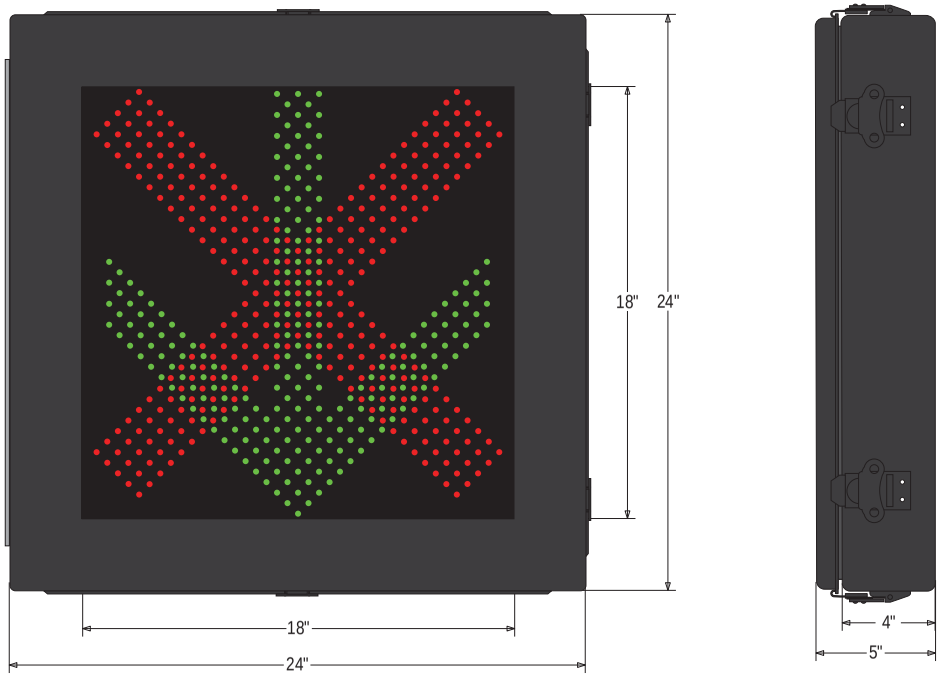

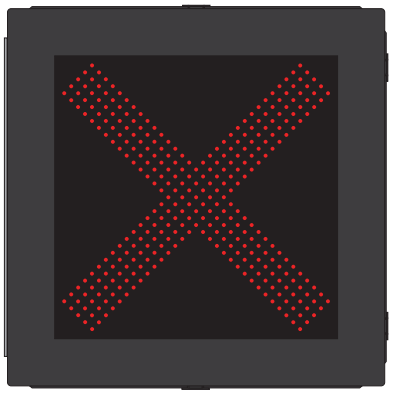

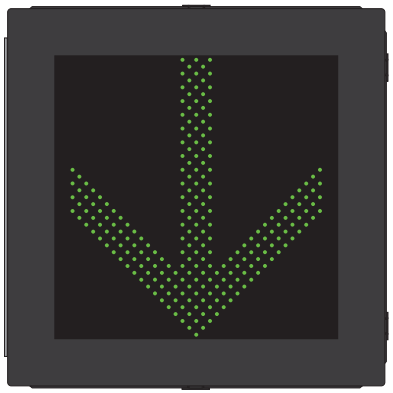

R-325
G-229

Copyright (C) 2013 Trans-Tech

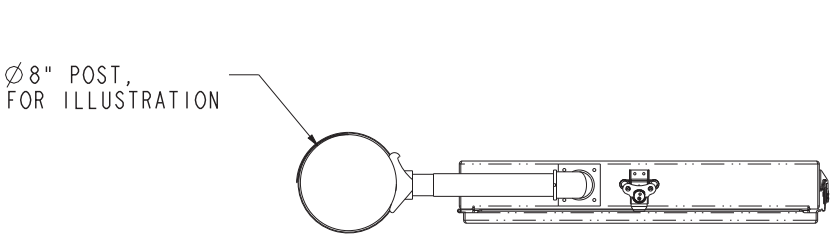

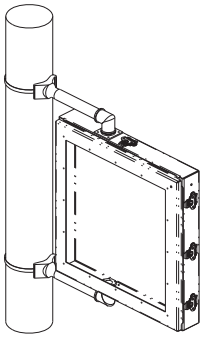

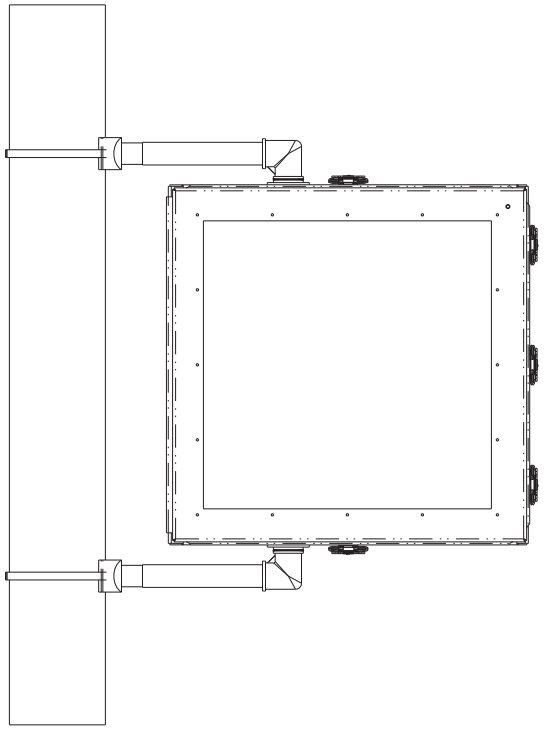

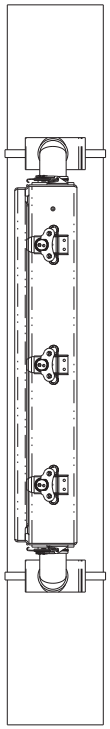

AP-F21

TYP TOL: ±1/16" ANGLES: ±2°		DATE: 10-MAR-11 SHEET 1 OF 3	3030 DOT, PELCO-MOUNTING	INV ID#:
		SignalTech	JDG	PROD ID#:
			4985 Pittsburgh Ave Erie, PA 16509	CUST ID#:

AP-F22

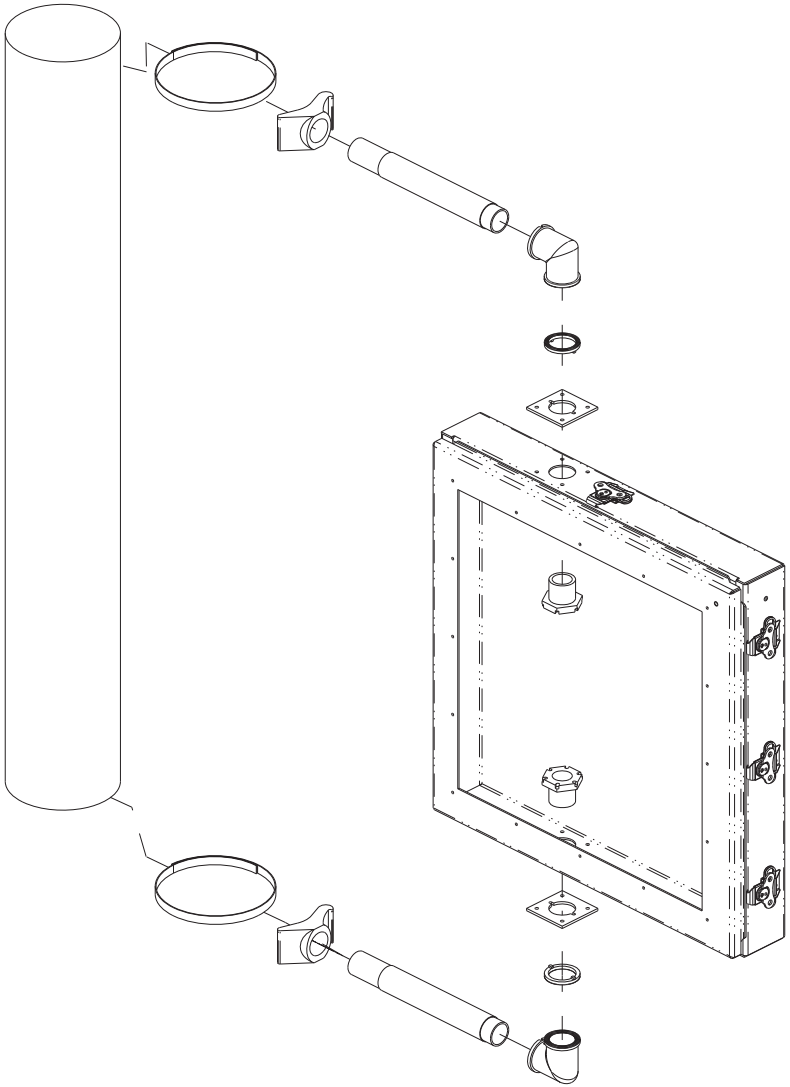

TYP TOL: ±1/16" ANGLES: ± 2°		DATE: 10-MAR-11 SHEET 2 OF 3	3030 DOT, PELCO-MOUNTING	INV ID#:
		SignalTech	JDG	PROD ID#:
			4985 Pittsburgh Ave Erie, PA 16509	CUST ID#:

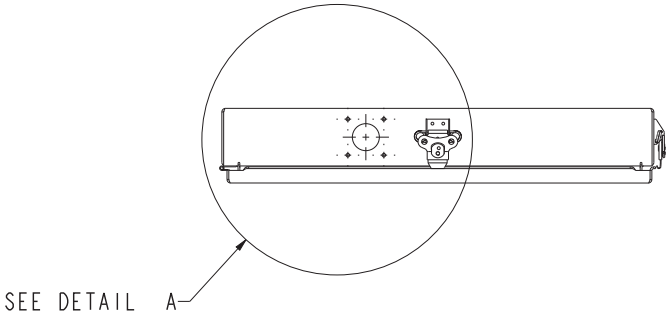

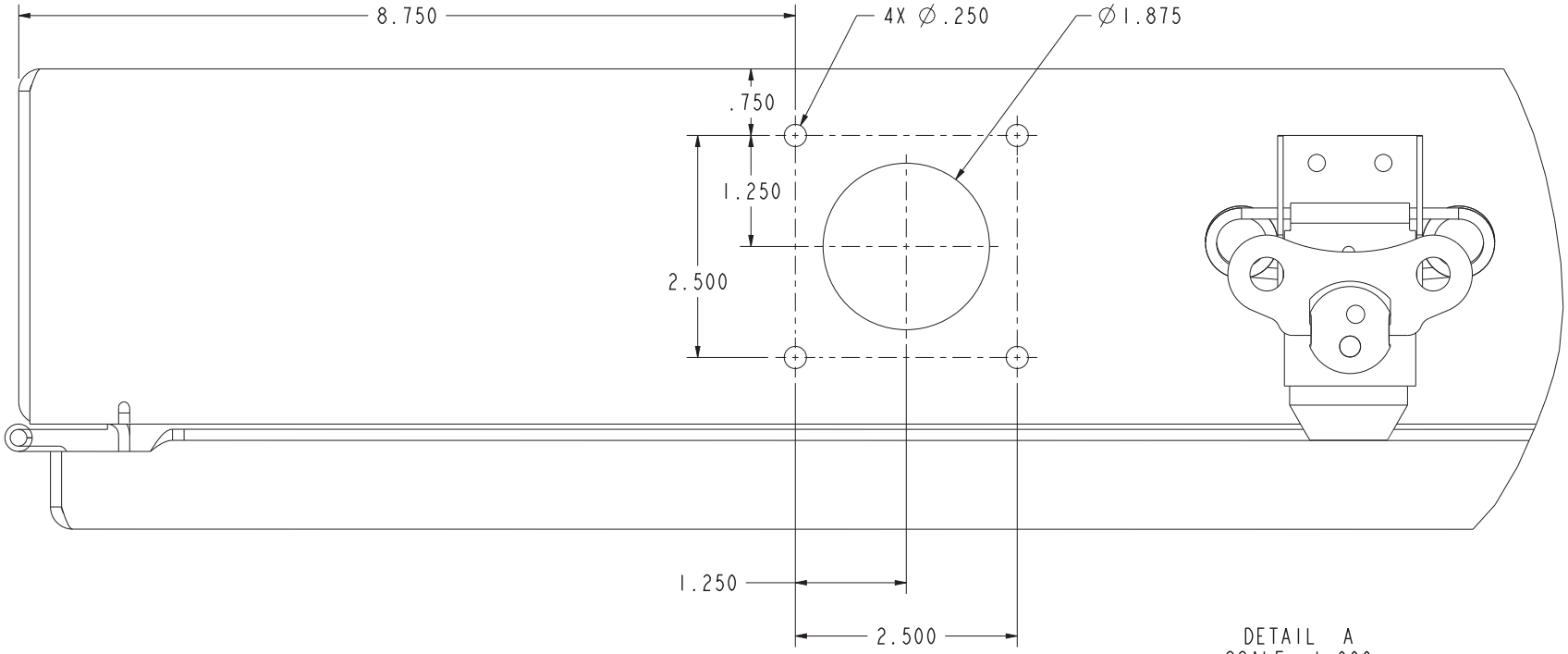

DETAIL A
SCALE 1.000

AP-F23

TYP TOL: ±1/16" ANGLES: ± 2°		DATE: 10-MAR-11 SHEET 3 OF 3	3030 DOT, PELCO-MOUNTING	INV ID#:
		SignalTech	JDG	PROD ID#:
			4985 Pittsburgh Ave Erie, PA 16509	CUST ID#: