Date:02/15/05

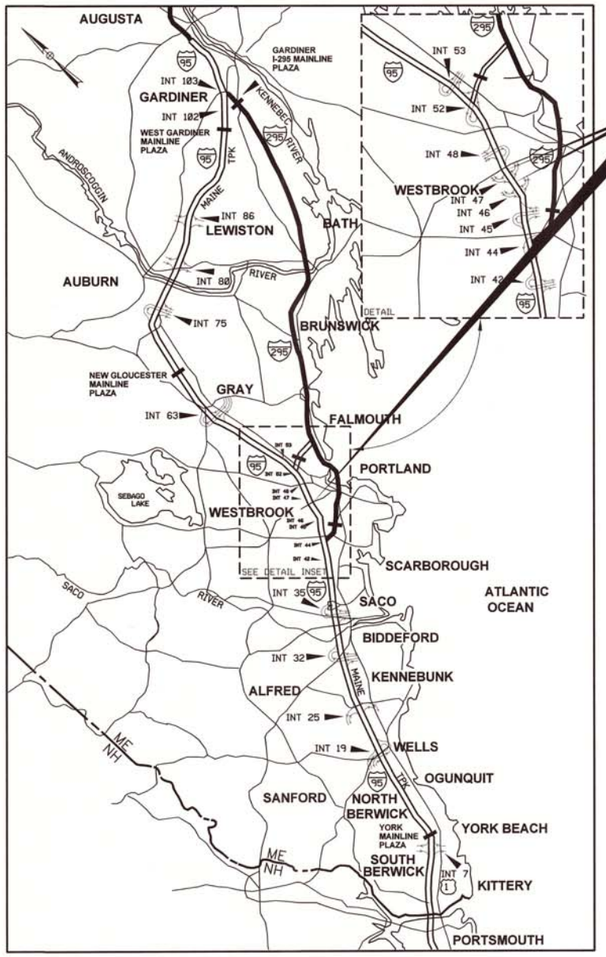

LOCATION MAP

CONTRACT 2014.11
BRIDGE REPAIRS
STROUDWATER RIVER BRIDGES
MAINE CENTRAL RAILROAD BRIDGES

MAINE TURNPIKE

THE GOLD STAR MEMORIAL HIGHWAY

MAINE TURNPIKE AUTHORITY

DANIEL E. WATHEN, CHAIR
DIANE M. DOYLE, VICE CHAIR
GERARD P. CONLEY, SR., MEMBER
JAMES F. CLOUTIER, MEMBER
JOHN E. DORITY, MEMBER
ROBERT D. STONE, MEMBER
BRUCE A. VAN NOTE, MEMBER EX-OFFICIO

S. PETER MILLS, EXECUTIVE DIRECTOR

INDEX OF SHEETS

SHEET NO.	DESCRIPTION
1	TITLE SHEET
2	ESTIMATED QUANTITIES AND GENERAL NOTES
3	TRAFFIC PHASING
4-8	STROUDWATER RIVER MAINTENANCE OF TRAFFIC
9-12	MAINE CENTRAL RAILROAD MAINTENANCE OF TRAFFIC
13	MAINTENANCE OF TRAFFIC DETAILS
14-15	SIGN SUMMARIES
16-19	DECK PLANS AND TYPICAL SECTIONS
20-23	BRIDGE JOINT MODIFICATIONS AND JOINT DETAILS
24-25	BEARING REPLACEMENT AND CONDUIT DETAILS
26-27	STROUDWATER RIVER SUBSTRUCTURE REPAIRS
28	MISCELLANEOUS BRIDGE DETAILS
29-30	STEEL PLATING PLAN AND DETAILS
31	GUARDRAIL AND SHOULDER MODIFICATIONS
32	LIMIT OF DISTURBANCE PLANS

CONTRACT 2014.11
BRIDGE REPAIRS
STROUDWATER RIVER BRIDGES
(MILE 46.7)
MAINE CENTRAL RAILROAD BRIDGES
(MILE 47.9)

HNTB

APPROVED:

MAINE TURNPIKE AUTHORITY

PETER S. MERFELD, P.E. - CHIEF OPERATIONS OFFICER — DATE 12/18/13

STEPHEN R. TARTRE, P.E., - DIRECTOR OF ENGINEERING & BUILDING MAINTENANCE — DATE 12/18/13

STATE OF MAINE — ROLAND A. LAVALLEE No. 6452 — LICENSED PROFESSIONAL ENGINEER

ROLAND A. LAVALLEE P.E., PLS
VICE PRESIDENT
DIRECTOR OF OPERATIONS
DATE 12/12/13

Filename: 001_MTATitle.dgn

ESTIMATED QUANTITIES

ITEM NO.	DESCRIPTION	Supplemental DESCRIPTION	UNIT	Stroudwater NB	Stroudwater SB	MCRR NB	MCRR SB	TOTALS
202.122	Removing Existing Concrete		CY	13	0	13	0	26
202.202	Removing Pavement Surface		SY	845	845	85	370	2145
202.2021	Removing Pavement Surface - Bridge Deck		SY	35	1275	35	0	1345
202.206	Removing Rumble Strips		LF	2020	0	1960	0	3980
203.20	Common Excavation		CY	70	0	80	0	150
206.082	Structural Earth Excavation - Major Structures		CY	9	0	9	0	18
304.09	Aggregate Base Course - Crushed		CY	6	0	6	0	12
403.208	Hot Mix Asphalt, 12.5 mm Nominal Maximum Size, Surface		Ton	70	85	75	35	265
403.2081	Hot Mix Asphalt, 12.5 mm Nominal Maximum Size - Bridge Deck		Ton	105	190	85	0	380
403.211	Hot Mix Asphalt (Shimming)		Ton	30	30	35	25	120
403.213	Hot Mix Asphalt, 12.5 mm Nominal Maximum Size, Base		Ton	35	0	35	0	70
409.15	Bituminous Tack Coat - Applied		GAL	45	40	45	30	160
409.151	Bituminous Tack Coat - Applied, Bridge		GAL	55	100	45	0	200
419.30	Sawing Bituminous Pavement		LF	380	305	405	0	1090
502.21	Structural Concrete, Abutments and Retaing Walls		CY	14	0	14	0	28
502.701	Bridge Drain Grate Modification		EA	4	4	4	0	12
502.81	Installation of Plastic Deck Drains		EA	0	7	0	0	7
503.14	High Performance Membrane	1350 SY	LS	0.03	0.94	0.03	0	1
507.095	Aluminum Bridge Railing – Splice Modifcation		EA	52	52	36	36	176
510.13	Temporary Steel Plate Special Detour		LS	0.5	0	0.5	0	1
511.091	Temporary Earth Support Systems		LS	0.5	0	0.5	0	1
514.06	Curing Box for Concrete Cylinders		EA	1	0	1	0	2
515.201	Pigmented Protective Coating for Concrete Surfaces		SY	65	65	0	0	130
515.202	Clear Protective Coating for Concrete Surfaces		SY	150	140	10	0	300
518.11	Abutment and Bridge Seat Repairs		SF	170	85	0	0	255
518.39	Granite Curb Joint Mortar and Bedding Mortar Repair		LF	0	160	0	0	160
518.80	Partial Depth Concrete Repairs		SF	0	700	0	0	700
518.81	Full Depth Concrete Repairs		SF	0	5	0	0	5
520.2225	Stroudwater River NB - Install Complete New Locking Compression Seal Joints		LF	84	0	0	0	84
520.2226	Stroudwater River SB - Install New Locking Compression Seals		LF	0	84	0	0	84
520.2227	Maine Central Railroad NB - Install Complete New Locking Compression Seal Joints		LF	0	0	86	0	86
520.2228	Maine Central Railroad SB - Install New Locking Compression Seals		LF	0	0	0	86	86
520.2234	Stroudwater River SB - Modify Joint Armor		LF	0	76	0	0	76
523.521	Bearing Removal and Reinstallation		EA	1	0	4	4	9
523.5304	Steel Bearing Replacement, Expansion, Rocker		EA	0	0	3	1	4
524.7211	Jacking Existing Superstructure (Bearing)		EA	1	0	7	5	13
526.306	Temporary Concrete Barrier, Type I - Supplied by Authority	000 LF	LS	0.5	0	0.5	0	1
527.34	Work Zone Crash Cushions - TL-3		UNIT	1	0	1	0	2
604.40	Secure Catch Basin Frame Grate		EA	4	0	0	0	4
606.178	Guardrail Beam		LF	25	0	25	0	50
606.352	Reflectorized Beam Guardrail Delineator		EA	105	0	135	0	240
606.3605	Guardrail - Remove, Modify, & Reset Sngle Rail		LF	250	0	275	0	525
606.48	Single Galvanized Steel Post		EA	3	0	3	0	6
615.07	Loam		CY	20	0	20	0	40
618.14	Seeding Method Number 2		Unit	2	0	2	0	4
619.12	Mulch		Unit	2	0	2	0	4
619.1202	Temporary Mulch		LS	0.4	0.2	0.4	0	1
626.112	Aluminum Junction Box		EA	0	2	0	0	2
626.212	Metallic Conduit - 2 Inch Rigid Galvanized		LF	0	604	0	0	604
627.681	Temporary 6 Inch Pavement Marking Line, Yellow or White		LF	9570	1650	8310	1350	20880
627.73	Temporary 6 Inch Pavement Marking Tape		LF	6060	0	5460	0	11520
627.731	Temporary 6 Inch Black Pavement Marking Tape		LF	3450	0	2950	0	6400
627.77	Removing Pavement Markings		SF	1870	0	1670	0	3540
627.812	Temporary Raised Pavement Markers		EA	200	200	180	40	620
629.05	Hand Labor		HR	30	10	30	10	80
631.10	Air Compressor (including operator)		HR	15	5	15	5	40
631.11	Air Tool (including operator)		HR	30	10	30	10	80
631.12	All Purpose Excavator (including operator)		HR	5	5	5	5	20
631.172	Truck - large (including operator)		HR	5	5	5	5	20
631.36	Foreman		HR	15	5	15	5	40
631.40	Welder (including operator)		HR	15	5	15	5	40
652.30	Flashing Arrow Board		EA	0.5	0.5	0.5	0.5	2
652.312	Type III Barricades		EA	4	0	4	0	8
652.33	Drum		EA	80	50	80	50	260
652.35	Construction Signs		SF	825	400	825	400	2450
652.361	Maintenance of Traffic Control Devices		LS	0.4	0.1	0.4	0.1	1
652.41	Portable - Changeable Message Sign		EA	0.5	0.5	0.5	0.5	2
652.451	Truck Mounted Attenuator		CD	60	30	60	10	160
656.50	Baled Hay, in place		EA	5	5	5	5	20
656.60	Temporary Berms		LF	150	0	150	0	300
656.62	Temporary Slope Drains		LF	80	0	80	0	160
656.632	30 inch Temporary Silt Fence		LF	450	100	450	0	1000
659.10	Mobilization		LS	0.4	0.1	0.4	0.1	1

GENERAL NOTES

1. THE CONTRACTOR IS REQUIRED TO CALL DIG SAFE AT 1-888-344-7233 AT LEAST 72 HOURS PRIOR TO START OF WORK.

2. THE CONTRACTOR SHALL NOTIFY THE RESIDENT 10 DAYS PRIOR TO CONSTRUCTION SO THE RESIDENT CAN ARRANGE FOR MAINE TURNPIKE UNDERGROUND UTILITY LOCATION. ALL PROPOSED SIGN LOCATIONS AND EXCAVATION LOCATIONS SHALL BE MARKED AT THE NOTIFICATION TIME. EXCAVATION WILL NOT BE PERMITTED UNTIL THE AUTHORITY HAS LOCATED AND MARKED ITS' UNDERGROUND UTILITIES, OR NOTIFIED THE RESIDENT THERE ARE NO UNDERGROUND UTILITIES IN THE MARKED AREAS.

THE AUTHORITY HAS PROGRAMMED TWO FIELD VISITS FOR MAINE TURNPIKE UTILITY COORDINATION ON THIS PROJECT. SHOULD THE CONTRACTOR NEED ADDITIONAL SIGN LOCATIONS AND/OR ADDITIONAL EXCAVATION LOCATIONS MARKED, OR SHOULD THE CONTRACTOR FAIL TO MAINTAIN THE AUTHORITY'S PREVIOUSLY ESTABLISHED DIG SAFE MARKS, THE AUTHORITY SHALL DEDUCT THE ADDED MARKING COSTS FROM THE CONTRACTOR'S PAYMENTS.

3. EXCAVATIONS ACCOMPLISHED AS PART OF THIS PROJECT SHALL BE CONSTRUCTED IN ACCORDANCE WITH OSHA SUBPART P OF 29 CFR PART 1926.650-652 (CONSTRUCTION STANDARDS FOR EXCAVATIONS).

4. ALL DETAILS SHALL BE IN CONFORMANCE WITH MAINE DEPARTMENT OF TRANSPORTATION (MAINEDOT) STANDARD DETAILS HIGHWAY AND BRIDGES LATEST REVISIONS AND MDOT BEST MANAGEMENT PRACTICES FOR EROSION AND SEDIMENT CONTROL LATEST REVISION UNLESS OTHERWISE INCLUDED IN THESE PLANS.

5. REINFORCING STEEL SHALL HAVE A CLEAR COVER OF 2" UNLESS OTHERWISE NOTED.

6. CHAMFER ALL EXPOSED CONCRETE EDGES ¾" UNLESS OTHERWISE NOTED.

7. WHERE DRILLING AND ANCHORING OF REINFORCING STEEL IS SPECIFIED THE CONTRACTOR SHALL USE A MATERIAL LISTED ON THE MAINEDOT PREQUALIFIED LIST OF CHEMICAL ANCHORING MATERIALS. THE DEPTH OF EMBEDMENT SHALL BE SUFFICIENT TO DEVELOP 125% OF THE YIELD STRENGTH OF THE BAR, BUT SHALL BE NO LESS THAN THE MINIMUM DEPTH OF EMBEDMENT WHEN SPECIFIED. WHERE MINIMUM EMBEDMENT DEPTHS HAVE NOT BEEN SPECIFIED BAR LENGTHS HAVE BEEN DEVELOPED BASED ON AN ASSUMED EMBEDMENT DEPTH OF 9" FOR #5 BARS AND 11" FOR #6 BARS. THE CONTRACTOR SHALL VERIFY THE REQUIRED DEPTH OF EMBEDMENT AND ADJUST THE REQUIRED BAR LENGTHS AS REQUIRED.

DRAINAGE NOTES

1. NO EXISTING DRAINAGE SHALL BE ABANDONED, REMOVED OR PLUGGED WITHOUT APPROVAL OF THE RESIDENT.

EROSION CONTROL

1. ADDITIONAL MEASURES MAY BE PROPOSED BY THE CONTRACTOR DUE TO SITE OR WEATHER CONDITIONS. THE RESIDENT MAY DIRECT THE CONTRACTOR TO IMPLEMENT ADDITIONAL MEASURES. ANY ADDITIONAL MEASURES APPROVED BY THE RESIDENT WILL BE MEASURED FOR PAYMENT.

2. ALL TEMPORARY EROSION CONTROL DEVICES SHALL BE INSTALLED IN ACCORDANCE WITH THE MAINE DEPARTMENT OF TRANSPORTATION BEST MANAGEMENT PRACTICES.

GUARDRAIL NOTES

1. AT THE END OF THE WORK DAY, EVERYDAY, THE CONTRACTOR IS REQUIRED TO HAVE AN APPROVED CRASHWORTHY END TREATMENT ON ALL GUARDRAIL WITHIN ALL WORK AREAS THAT ARE ACCESIBLE TO TRAFFIC.

2. CONNECTIONS FOR PROPOSED GUARDRAIL TO EXISTING GUARDRAIL SHALL BE INCIDENTAL TO THE PROPOSED GUARDRAIL ITEMS.

3. FOR ALL NEW GUARDRAIL TYPE 3d W-BEAM, OFFSET BLOCKS SHALL BE NON-WOOD CONFORMING TO NCHRP 350 TEST LEVEL

4. ALL PROPOSED GUARDRAIL AND RESET GUARDRAIL SHALL BE INSTALLED IN A MANNER TO AVOID DRAINAGE STRUCTURES AND UTILITIES.

MATERIALS

CONCRETE

SUBSTRUCTURE CONCRETE REPAIRS SHALL BE PER SP 518.
ALL OTHER CONCRETE SHALL BE CLASS AAA.

REINFORCING STEEL

AASHTO M31, GRADE 60
ALL REINFORCING SHALL BE EPOXY-COATED.

ANCHOR RODS SHALL MEET THE REQUIREMENTS OF ASTM F1554, GRADE 55 AND SHALL BE SWEDGED OR THREADED ON THE EMBEDDED PORTION OF THE ROD.

LIST OF ABBREVIATIONS

ABUT. - ABUTMENT
ADDL. - ADDITIONAL
ALT. - ALTERNATE
APPROX. - APPROXIMATELY
BOT. - BOTTOM
BRG. - BEARING
CL. - CLEAR
℄ - CENTERLINE
CONC. - CONCRETE
CONSTR. - CONSTRUCTION
DEMO. - DEMOLITION
DIA. - DIAMETER
EA. - EACH
EB - EASTBOUND
E.F. - EACH FACE
EL. - ELEVATION
EQ. - EQUAL
EXIST. - EXISTING
EXP. - EXPANSION
F.F. - FAR FACE
JT. - JOINT
MAX. - MAXIMUM
MAINEDOT - MAINE DEPARTMENT OF TRANSPORTATION
MIN. - MINIMUM
MTA - MAINE TURNPIKE AUTHORITY
NB - NORTHBOUND
N.F. - NEAR FACE
N.T.S. - NOT TO SCALE
PED. - PEDESTAL
PGL - PROFILE GRADE LINE
ℙ - PLATE
PROP. - PROPOSED
P.S.I. - POUNDS per SQUARE INCH
RDWY. - ROADWAY
SHLDR. - SHOULDER
SB - SOUTHBOUND
SP. - SPACES
STA. - STATION
T.&B. - TOP & BOTTOM
TPKE. - TURNPIKE
TYP. - TYPICAL
U.O.N. - UNLESS OTHERWISE NOTED
VERT. - VERTICAL
WB - WESTBOUND
W.P. - WORKING POINT

Date:12/19/2013

Filename: 002_Quantities.dgn

Scale:

No.	Revision	By	Date

Designed by:

HNTB

CONSULTANT PROJECT MANAGER: Robert J. Driscoll

	By	Date		By	Date
Designed	CAH	12/13	Checked	TMH	12/13
Drawn	JRD	12/13	In Charge of	RAL	12/13

HNTB CORPORATION
340 County Road, Suite 6-C
Westbrook, ME 04092
TEL (207) 774-5155
FAX (207) 228-0909

MAINE TURNPIKE

THE GOLD STAR MEMORIAL HIGHWAY

MTA PROJECT MANAGER: Ralph C. Norwood, IV, P.E., P.T.O.E.

BRIDGE REPAIRS – STROUDWATER RIVER & MAINE CENTRAL RAILROAD

ESTIMATED QUANTITIES AND GENERAL NOTES

SHEET NUMBER: 2

CONTRACT: 2014.11

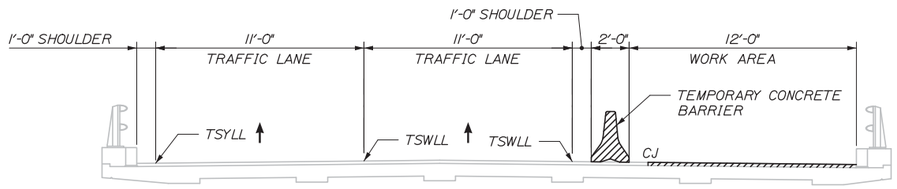

PHASE I - DAYTIME WORK ZONE

1/4" = 1'-0"

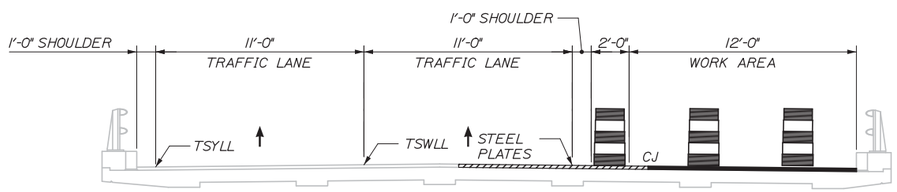

PHASE II - DAYTIME - NO WORK PERMITTED

1/4" = 1'-0"

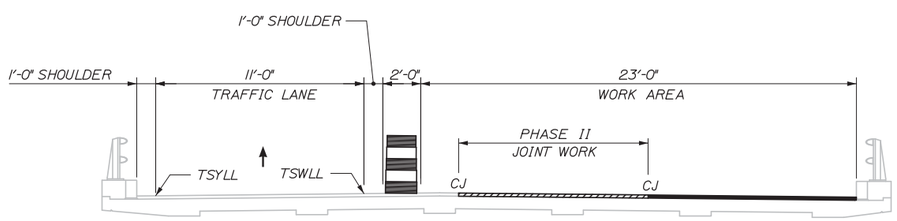

PHASE II - NIGHTTIME WORK ZONE

1/4" = 1'-0"

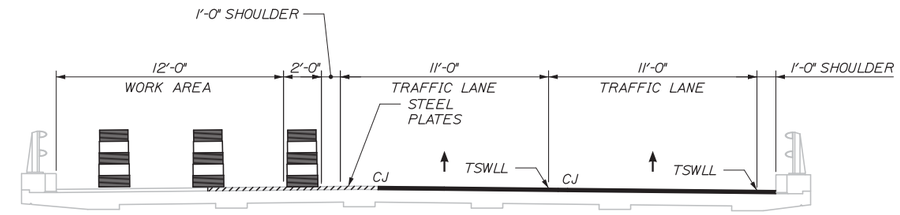

PHASE III - DAYTIME - NO WORK PERMITTED

1/4" = 1'-0"

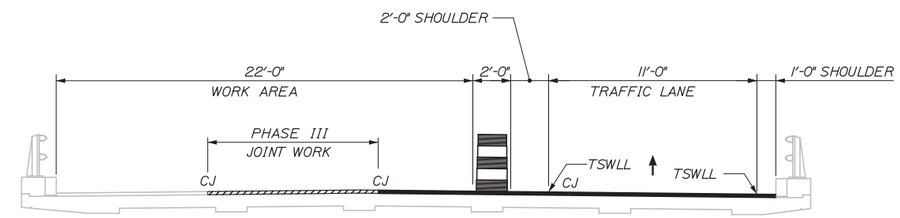

PHASE III - NIGHTTTIME WORK ZONE

1/4" = 1'-0"

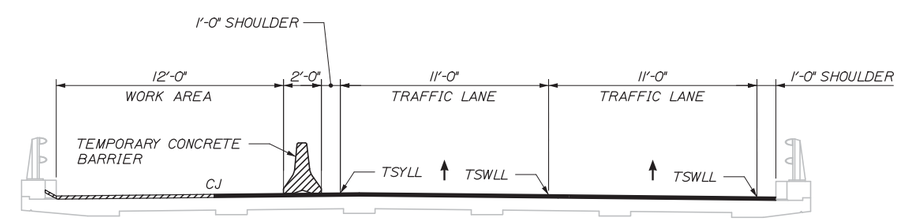

PHASE IV - DAYTIME WORK ZONE

1/4" = 1'-0"

JOINT UNDER CONSTRUCTION
JOINT COMPLETE
CJ = CONSTRUCTION JOINT
TSWLL = TEMPORARY SOLID WHITE LANE LINE
TSYLL = TEMPORARY SOLID YELLOW LANE LINE

NOTE:
FINAL LIFT OF DECK PAVEMENT AND APPROACH SHIMMING SHALL BE PLACED NIGHTS AFTER PHASE IV IS COMPLETE. PAVEMENT JOINTS SHALL MATCH AT 25'-0" AND 37'-0" RIGHT OF MTA CENTERLINE.

Date:12/19/2013

Filename: 003_Phasing.dgn

Scale: AS NOTED

No.	Revision	By	Date

Designed by: HNTB

CONSULTANT PROJECT MANAGER: Robert J. Driscoll, P.E.

	By	Date		By	Date
Designed	CAH	12/13	Checked	TMH	12/13
Drawn	JRD	12/13	In Charge of	RAL	12/13

HNTB CORPORATION
340 County Road, Suite 6-C
Westbrook, ME 04092
TEL (207) 774-5155
FAX (207) 228-0909

MAINE TURNPIKE

THE GOLD STAR MEMORIAL HIGHWAY

MTA PROJECT MANAGER: Ralph C. Norwood, IV, P.E., P.T.O.E.

BRIDGE REPAIRS - STROUDWATER RIVER & MAINE CENTRAL RAILROAD

NORTHBOUND TRAFFIC PHASING

SHEET NUMBER: 3

CONTRACT: 2014.11

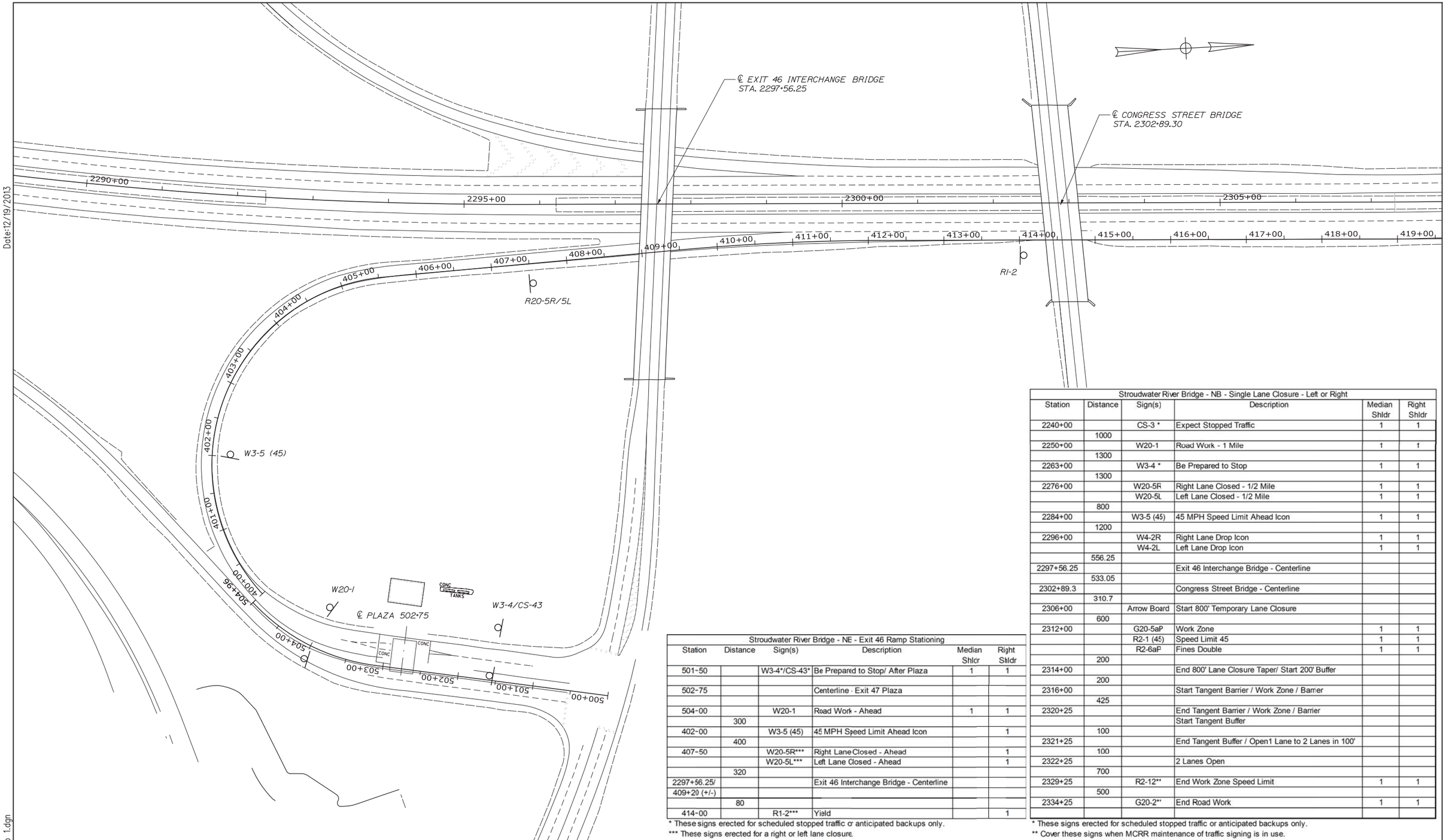

Stroudwater River Bridge - NE - Exit 46 Ramp Stationing					
Station	Distance	Sign(s)	Description	Median Shldr	Right Shldr
501+50		W3-4*/CS-43*	Be Prepared to Stop/ After Plaza	1	1
502+75			Centerline - Exit 47 Plaza		
504+00		W20-1	Road Work - Ahead	1	1
	300				
402+00		W3-5 (45)	45 MPH Speed Limit Ahead Icon		1
	400				
407+50		W20-5R***	Right Lane Closed - Ahead		1
		W20-5L***	Left Lane Closed - Ahead		1
	320				
2297+56.25/			Exit 46 Interchange Bridge - Centerline		
409+20 (+/-)					
	80				
414+00		R1-2***	Yield		1

* These signs erected for scheduled stopped traffic or anticipated backups only.
*** These signs erected for a right or left lane closure.

Stroudwater River Bridge - NB - Single Lane Closure - Left or Right					
Station	Distance	Sign(s)	Description	Median Shldr	Right Shldr
2240+00		CS-3 *	Expect Stopped Traffic	1	1
	1000				
2250+00		W20-1	Road Work - 1 Mile	1	1
	1300				
2263+00		W3-4 *	Be Prepared to Stop	1	1
	1300				
2276+00		W20-5R	Right Lane Closed - 1/2 Mile	1	1
		W20-5L	Left Lane Closed - 1/2 Mile	1	1
	800				
2284+00		W3-5 (45)	45 MPH Speed Limit Ahead Icon	1	1
	1200				
2296+00		W4-2R	Right Lane Drop Icon	1	1
		W4-2L	Left Lane Drop Icon	1	1
	556.25				
2297+56.25			Exit 46 Interchange Bridge - Centerline		
	533.05				
2302+89.3			Congress Street Bridge - Centerline		
	310.7				
2306+00		Arrow Board	Start 800' Temporary Lane Closure		
	600				
2312+00		G20-5aP	Work Zone	1	1
		R2-1 (45)	Speed Limit 45	1	1
		R2-6aP	Fines Double	1	1
	200				
2314+00			End 800' Lane Closure Taper/ Start 200' Buffer		
	200				
2316+00			Start Tangent Barrier / Work Zone / Barrier		
	425				
2320+25			End Tangent Barrier / Work Zone / Barrier		
			Start Tangent Buffer		
	100				
2321+25			End Tangent Buffer / Open1 Lane to 2 Lanes in 100'		
	100				
2322+25			2 Lanes Open		
	700				
2329+25		R2-12**	End Work Zone Speed Limit	1	1
	500				
2334+25		G20-2**	End Road Work	1	1

* These signs erected for scheduled stopped traffic or anticipated backups only.
** Cover these signs when MCRR maintenance of traffic signing is in use.

Scale: 60 0 60 120

No.	Revision	By	Date

Designed by:

HNTB

CONSULTANT PROJECT MANAGER: Robert J. Driscoll, P.E.

	By	Date		By	Date
Designed	CAH	12/13	Checked	TMH	12/13
Drawn	JRD	12/13	In Charge of	RAL	12/13

HNTB CORPORATION
340 County Road, Suite 6-C
Westbrook, ME 04092
TEL (207) 774-5155
FAX (207) 228-0909

MAINE TURNPIKE

THE GOLD STAR MEMORIAL HIGHWAY

MTA PROJECT MANAGER: Ralph C. Norwood, IV, P.E., P.T.O.E.

BRIDGE REPAIRS - STROUDWATER RIVER & MAINE CENTRAL RAILROAD

STROUDWATER RIVER

MAINTENANCE OF TRAFFIC I

SHEET NUMBER: 4

CONTRACT: 2014.11

Date:12/19/2013

Filename: 004_MOT_SR_Topo 1.dgn

Date:12/19/2013

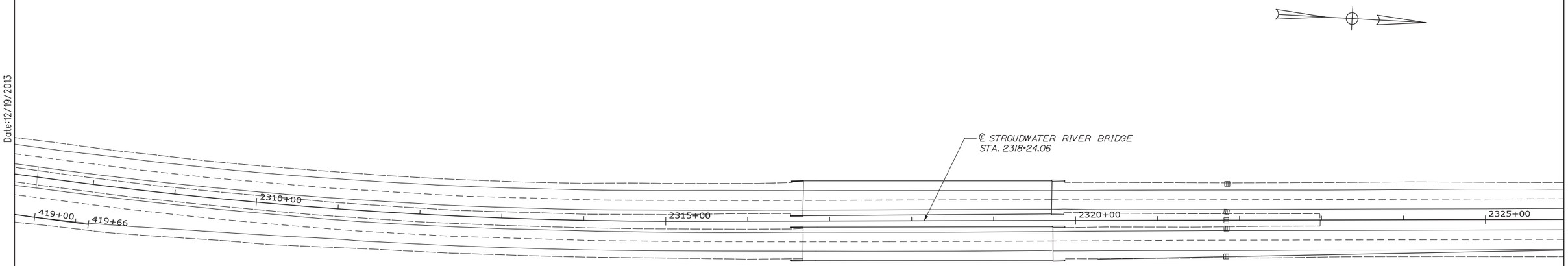

Stroudwater River Bridge - NB - Double Lane Shift Left					
Station	Distance	Sign(s)	Description	Median Shldr	Right Shldr
2240+00		CS-3 *	Expect Stopped Traffic	1	1
	1000				
2250+00		W20-1	Road Work - 1 Mile	1	1
	1300				
2263+00		W3-4 *	Be Prepared to Stop	1	1
	2100				
2284+00		W3-5 (45)	45 MPH Speed Limit Ahead Icon	1	1
	1356.25				
2297+56.25			Exit 46 Interchange Bridge - Centerline		
	443.75				
2302+00		W24-1aL	Double Lane Shift Left Curve Icon	1	1
	89.3				
2302+89.3			Congress Street Bridge - Centerline		
	910.7				
2312+00		G20-5aP	Work Zone	1	1
		R2-1 (45)	Speed Limit 45	1	1
		R2-6aP	Fines Double	1	1
	120				
2313+20			Start Double Lane Shift Left 280'		
	280				
2316+00			End Double Lane Shift Left 280'		
			Start Tangent Barrier/ Work Zone / Tangent Barrier		
	430				
2320+30			Start Double Lane Shift Right 280'		
	280				
2323+10			End Double Lane Shift Right 280'		
	615				
2329+25		R2-12**	End Work Zone Speed Limit	1	1
	500				
2334+25		G20-2**	End Road Work	1	1

* These signs erected for scheduled stopped traffic or anticipated backups only.
** Cover these signs when MCRR maintenance of traffic signing is in use.

Stroudwater River Bridge - NB - Double Lane Shift Right					
Station	Distance	Sign(s)	Description	Median Shldr	Right Shldr
2240+00		CS-3 *	Expect Stopped Traffic	1	1
	1000				
2250+00		W20-1	Road Work - 1 Mile	1	1
	1300				
2263+00		W3-4 *	Be Prepared to Stop	1	1
	2100				
2284+00		W3-5 (45)	45 MPH Speed Limit Ahead Icon	1	1
	1356.25				
2297+56.25			Exit 46 Interchange Bridge - Centerline		
	443.75				
2302+00		W24-1aR	Double Lane Shift Right Curve Icon	1	1
	89.3				
2302+89.30			Congress Street Bridge - Centerline		
	480.7				
2307+70			Start Double Lane Shift Right 830'		
	430				
2312+00		G20-5aP	Work Zone	1	1
		R2-1 (45)	Speed Limit 45	1	1
		R2-6aP	Fines Double	1	1
	400				
2316+00			End Double Lane Shift Right 830'		
			Start Tangent Barrier / Work Zone / Barrier		
	430				
2320+30			End Tangent Barrier /Start Double Lane Shift Left 610'		
	610				
2326+40			End Double Lane Shift Left 610'		
	285				
2329+25		R2-12	End Work Zone Speed Limit	1	1
	500				
2334+25		G20-2	End Road Work	1	1

* These signs erected for scheduled stopped traffic or anticipated backups only.
** Cover these signs when MCRR maintenance of traffic signing is in use.

Filename: 005_MOT_SR_Topo 2.dgn

Scale: 60 0 60 120

No.	Revision	By	Date

Designed by:

HNTB

CONSULTANT PROJECT MANAGER: Robert J. Driscoll, P.E.

	By	Date		By	Date
Designed	CAH	12/13	Checked	TMH	12/13
Drawn	JRD	12/13	In Charge of	RAL	12/13

HNTB CORPORATION
340 County Road, Suite 6-C
Westbrook, ME 04092
TEL (207) 774-5155
FAX (207) 228-0909

MAINE TURNPIKE

THE GOLD STAR MEMORIAL HIGHWAY

MTA PROJECT MANAGER: Ralph C. Norwood, IV, P.E., P.T.O.E.

BRIDGE REPAIRS - STROUDWATER RIVER & MAINE CENTRAL RAILROAD

STROUDWATER RIVER
MAINTENANCE OF TRAFFIC II

SHEET NUMBER: 5

CONTRACT: 2014.11

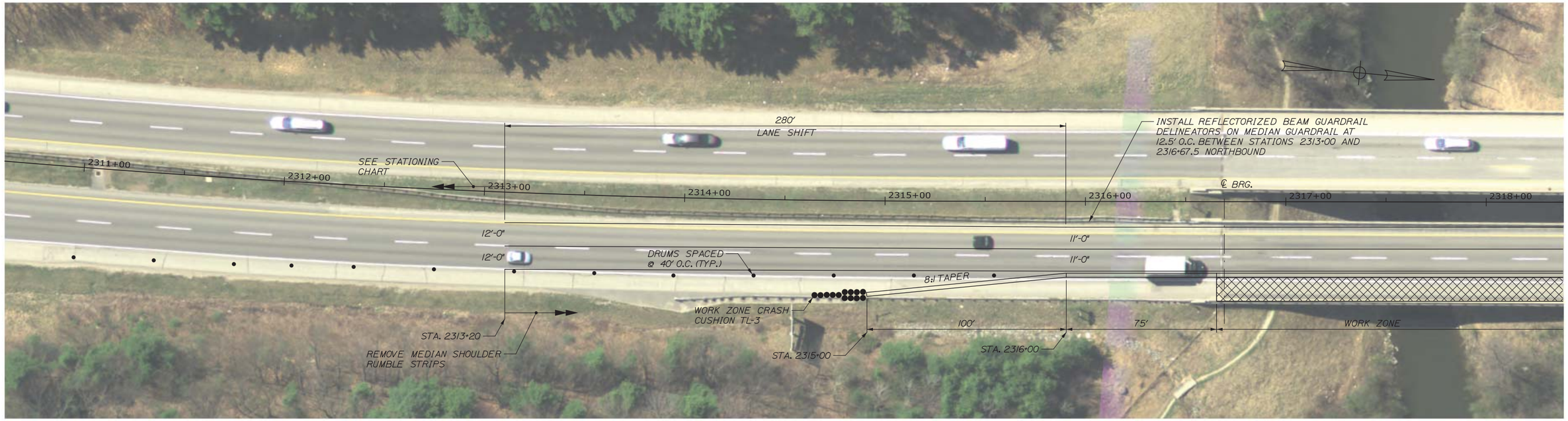

STROUDWATER RIVER NORTHBOUND - PHASE I

1" = 25'

PHASE II SIMILAR - NO BARRIER

WORK ZONE EXTENDS INTO LANE 2

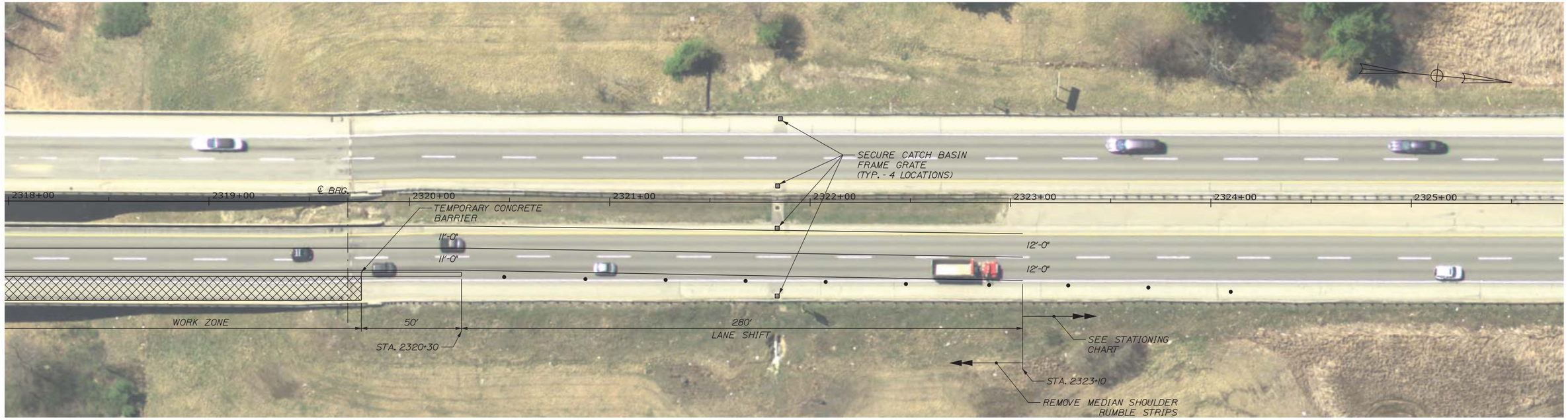

Scale: 25 0 25 50

No.	Revision	By	Date

Designed by: HNTB

CONSULTANT PROJECT MANAGER: Robert J. Driscoll, P.E.

	By	Date		By	Date
Designed	CAH	12/13	Checked	TMH	12/13
Drawn	JRD	12/13	In Charge of	RAL	12/13

HNTB CORPORATION
340 County Road, Suite 6-C
Westbrook, ME 04092
TEL (207) 774-5155
FAX (207) 228-0909

MAINE TURNPIKE

THE GOLD STAR MEMORIAL HIGHWAY

MTA PROJECT MANAGER: Ralph C. Norwood, IV, P.E., P.T.O.E.

BRIDGE REPAIRS - STROUDWATER RIVER & MAINE CENTRAL RAILROAD

STROUDWATER RIVER

MAINTENANCE OF TRAFFIC III

SHEET NUMBER: 6

CONTRACT: 2014.11

Date:12/19/2013

Filename: 006_MOT_SR_Aerial_Phase_1.dgn

Date:12/19/2013

STROUDWATER - NORTHBOUND PHASE IV

1" = 25'

PHASE III SIMILAR - NO BARRIER

WORK ZONE EXTENDS INTO LANE 1

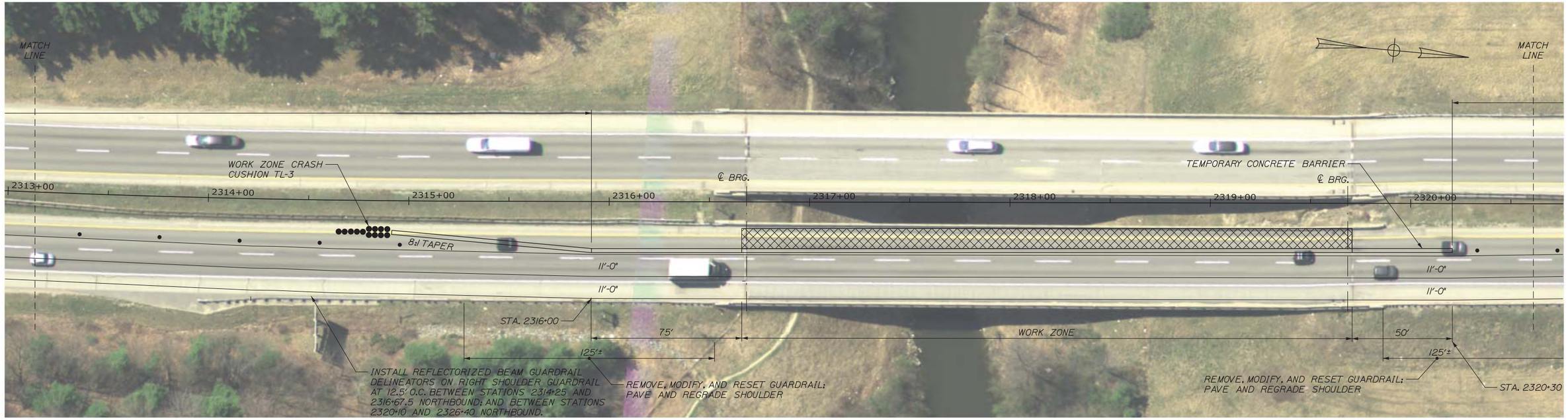

Scale: 25 0 25 50

No.	Revision	By	Date

Designed by: HNTB

CONSULTANT PROJECT MANAGER: Robert J. Driscoll, P.E.

	By	Date		By	Date
Designed	CAH	12/13	Checked	TMH	12/13
Drawn	JRD	12/13	In Charge of	RAL	12/13

HNTB CORPORATION
340 County Road, Suite 6-C
Westbrook, ME 04092
TEL (207) 774-5155
FAX (207) 228-0909

MAINE TURNPIKE

THE GOLD STAR MEMORIAL HIGHWAY

MTA PROJECT MANAGER: Ralph C. Norwood, IV, P.E., P.T.O.E.

BRIDGE REPAIRS - STROUDWATER RIVER & MAINE CENTRAL RAILROAD

STROUDWATER RIVER

MAINTENANCE OF TRAFFIC IV

SHEET NUMBER: 7

CONTRACT: 2014.11

Filename: 007_MOT_SR_Aerial_Phase_4_a.dgn

STROUDWATER - NORTHBOUND PHASE IV

1" = 25'

PHASE III SIMILAR - NO BARRIER

WORK ZONE EXTENDS INTO LANE 1

Date:12/19/2013

Filename: 008_MOT_SR_Aerial_Phase_4_b.dgn

Scale: 25 0 25 50

No.	Revision	By	Date

Designed by: HNTB

CONSULTANT PROJECT MANAGER: Robert J. Driscoll, P.E.

	By	Date		By	Date
Designed	CAH	12/13	Checked	TMH	12/13
Drawn	JRD	12/13	In Charge of	RAL	12/13

HNTB CORPORATION
340 County Road, Suite 6-C
Westbrook, ME 04092
TEL (207) 774-5155
FAX (207) 228-0909

MAINE TURNPIKE

THE GOLD STAR MEMORIAL HIGHWAY

MTA PROJECT MANAGER: Ralph C. Norwood, IV, P.E., P.T.O.E.

BRIDGE REPAIRS - STROUDWATER RIVER & MAINE CENTRAL RAILROAD

STROUDWATER RIVER

MAINTENANCE OF TRAFFIC V

SHEET NUMBER: 8

CONTRACT: 2014.11

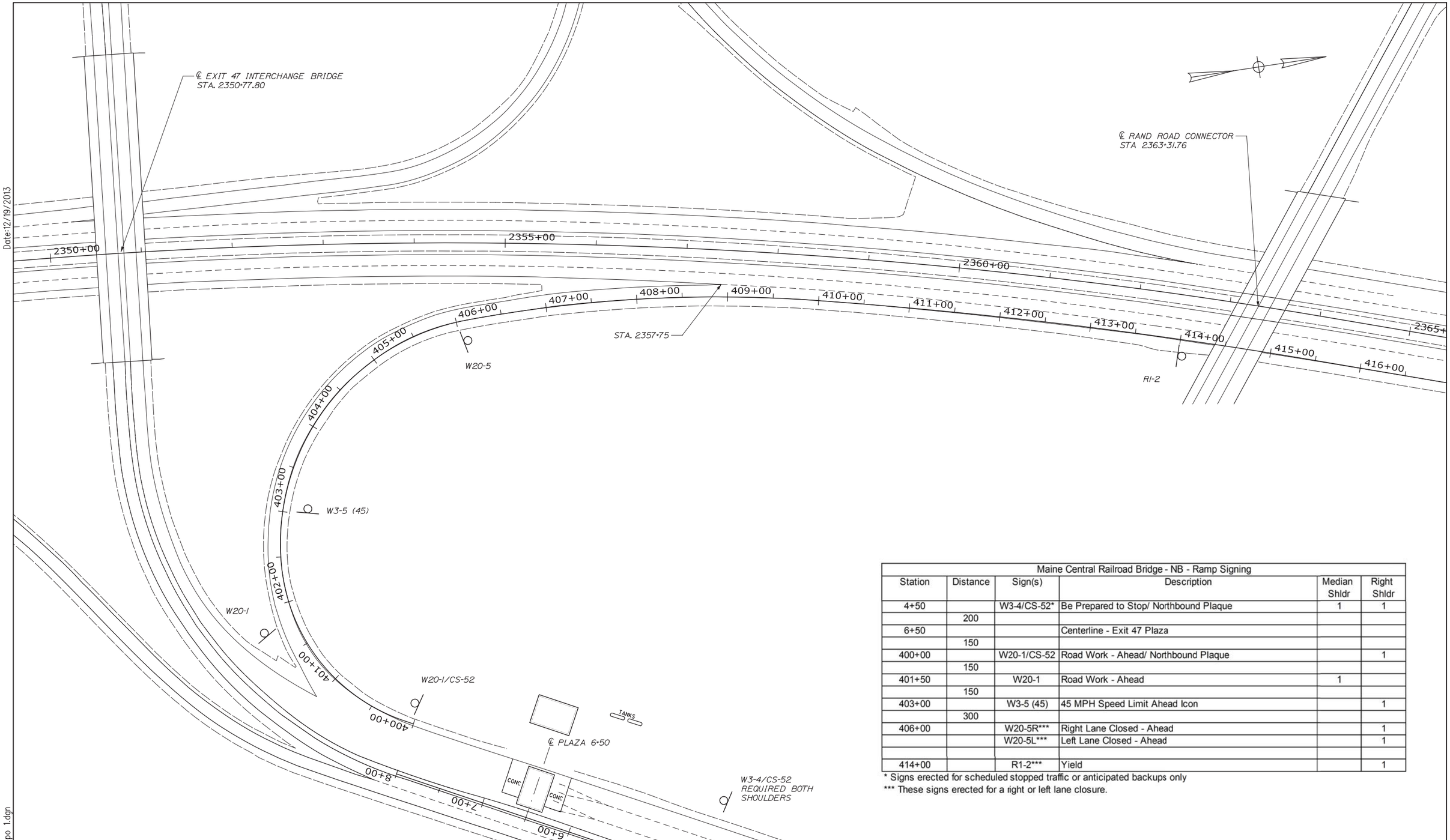

Maine Central Railroad Bridge - NB - Ramp Signing					
Station	Distance	Sign(s)	Description	Median Shldr	Right Shldr
4+50		W3-4/CS-52*	Be Prepared to Stop/ Northbound Plaque	1	1
	200				
6+50			Centerline - Exit 47 Plaza		
	150				
400+00		W20-1/CS-52	Road Work - Ahead/ Northbound Plaque		1
	150				
401+50		W20-1	Road Work - Ahead	1	
	150				
403+00		W3-5 (45)	45 MPH Speed Limit Ahead Icon		1
	300				
406+00		W20-5R***	Right Lane Closed - Ahead		1
		W20-5L***	Left Lane Closed - Ahead		1
414+00		R1-2***	Yield		1

* Signs erected for scheduled stopped traffic or anticipated backups only
*** These signs erected for a right or left lane closure.

Date:12/19/2013

Filename: 009_MOT_MCRR_Topo 1.dgn

Scale: 50 0 50 100

No.	Revision	By	Date

Designed by: HNTB

CONSULTANT PROJECT MANAGER: Robert J. Driscoll, P.E.

	By	Date		By	Date
Designed	CAH	12/13	Checked	TMH	12/13
Drawn	JRD	12/13	In Charge of	RAL	12/13

HNTB CORPORATION
340 County Road, Suite 6-C
Westbrook, ME 04092
TEL (207) 774-5155
FAX (207) 228-0909

MAINE TURNPIKE

THE GOLD STAR MEMORIAL HIGHWAY

MTA PROJECT MANAGER: Ralph C. Norwood, IV, P.E., P.T.O.E.

BRIDGE REPAIRS - STROUDWATER RIVER & MAINE CENTRAL RAILROAD

MAINE CENTRAL RAILROAD
MAINTENANCE OF TRAFFIC I

SHEET NUMBER: 9

CONTRACT: 2014.11

Date:12/19/2013

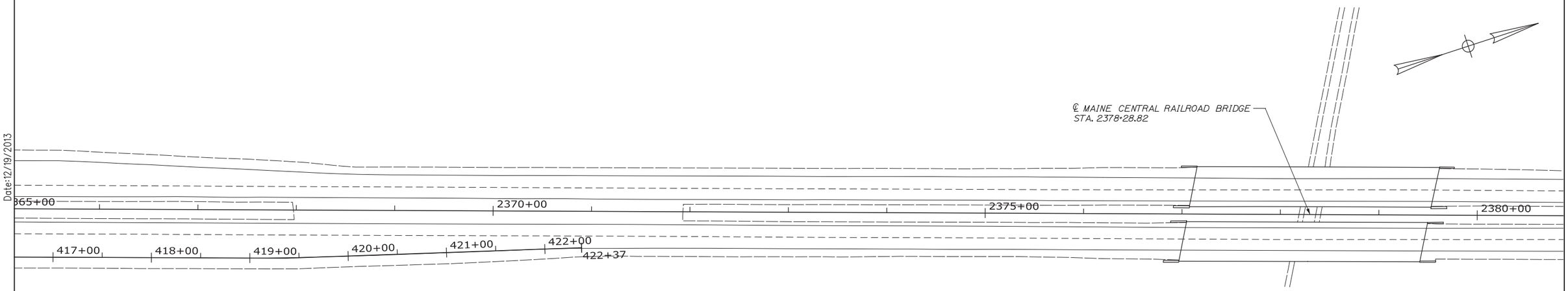

Maine Central Railroad Bridge - NB - Single Lane Closure - Left or Right					
Station	Distance	Sign(s)	Description	Median Shldr	Right Shldr
2301+00		CS-3*	Expect Stopped Traffic	1	1
	1300				
2314+00		W20-1	Road Work - 1 Mile	1	1
	1300				
2327+00		W3-4*	Be Prepared to Stop	1	1
	1300				
2340+00		W20-5R	Right Lane Closed - 1/2 Mile	1	1
		W20-5L	Left Lane Closed - 1/2 Mile	1	1
	900				
2348+00		W3-5 (45)**	45 MPH Speed Limit Ahead Icon	1	1
	577.8				
2350+77.8			Centerline - Exit 47 Interchange Bridge	1	1
	522.2				
2356+00		W4-2R	Right Lane Drop Icon	1	1
		W4-2L	Left Lane Drop Icon	1	1
	1000				
2363+31.76			Centerline - Rand Road Connector Bridge		
	268.24				
2366+00		Arrow Board	Start 800' Temporary Lane Closure		
	600				
2372+00		G20-5aP	Work Zone	1	1
		R2-1 (45)	Speed Limit 45	1	1
		R2-6aP	Fines Double	1	1
	200				
2374+00			End 800' Lane Closure/ Start 225' Buffer		
	625				
2376+25			Start Tangent Buffer/ Work Zone / Tangent Buffer		
	203.8				
2378+28.82			Centerline - MCRR Bridge		
	166.2				
2379+95			End Tangent Buffer/ Open1 Lane to 2 Lanes in ·00'		
	100				
2380+95			2 Lanes Open		
	805				
2389+00		R2-12	End Work Zone Speed Limit	1	1
	500				
2394+00		G20-2	End Road Work	1	1

* Signs erected for scheduled stopped traffic or anticipated backups only
** Cover these signs when both Stroudwater and MCRR 45 MPH signs in use

Maine Central Railroad Bridge - NB - Double Lane Shift Left					
Station	Distance	Sign(s)	Description	Median Shldr	Right Shldr
2301+00		CS-3*	Expect Stopped Traffic	1	1
	1300				
2314+00		W20-1	Road Work - 1 Mile	1	1
	1300				
2327+00		W3-4*	Be Prepared to Stop	1	1
	2200				
2348+00		W3-5 (45)**	45 MPH Speed Limit Ahead Icon	1	1
	577.8				
2350+77.8			Centerline - Exit 47 Interchange Bridge	1	1
	1147.2				
2363+00		W24-1aL	Double Lane Shift Left Curve Icon	1	1
	·06.8				
2363+31.76			Centerline - Rand Road Connector Bridge		
	838.24				
2372+00		G20-5aP	Work Zone	1	1
		R2-1 (45)	Speed Limit 45	1	1
		R2-6aP	Fines Double	1	1
	145				
2373+45			Start Double Lane Shift Left 280'		
	280				
2376+25			End Double Lane Shift Left 280'		
			Start Tangent Barrier/ Work Zone / Tangent Barrier		
	203.8				
2378+28.82			Centerline - MCRR Bridge		
	·66.2				
2379+95			End Tangent Barrier /Start Double Lane Shift Righ: 280'		
	280				
2382+75			End Double Lane Shift Right 280'		
	625				
2389+00		R2-12	End Work Zone Speed Limit	1	1
	500				
2394+00		G20-2	End Road Work	1	1

* Signs erected for scheduled stopped traffic or anticipated backups only
** Cover these signs when both Stroudwater and MCRR 45 MPH signs in use

Maine Central Railroad Bridge - NB - Double Lane Shift Right					
Station	Distance	Sign(s)	Description	Median Shldr	Right Shldr
2301+00		CS-3*	Expect Stopped Traffic	1	1
	1300				
2314+00		W20-1	Road Work - 1 Mile	1	1
	1300				
2327+00		W3-4*	Be Prepared to Stop	1	1
	2200				
2348+00		W3-5 (45)**	45 MPH Speed Limit Ahead Icon	1	1
	577.8				
2350+77.8			Centerline - Exit 47 Interchange Bridge		
	1147.2				
2363+00		W24-1aR	Double Lane Shift Right Reverse Curve Icon	1	1
	106.8				
2363+31.76			Centerline - Rand Road Connector Bridge		
	868.24				
2370+15			Start Double Lane Shift Right 610'		
	215				
2372+00		G20-5aP	Work Zone	1	1
		R2-1 (45)	Speed Limit 45	1	1
		R2-6aP	Fines Double	1	1
	425				
2376+25			Start Tangent Barrier / Work Zone / Tangent Barrier		
	203.8				
2378+28.82			Centerline - MCRR Bridge		
	166.2				
2379+95			End Tangent Barrier/Start Double Lane Shift Right. 610'		
	610				
2386+05			End Double Lane Shift Left 610'	1	1
	295				
2389+00		R2-12	End Work Zone Speed Limit	1	1
	500				
2394+00		G20-2	End Road Work	1	1

* Signs erected for scheduled stopped traffic or anticipated backups only
** Cover these signs when both Stroudwater and MCRR 45 MPH signs in use

Filename: 010_MOT_MCRR_Topo 2.dgn

Scale: 50 0 50 100

No.	Revision	By	Date

Designed by:

HNTB

CONSULTANT PROJECT MANAGER: Robert J. Driscoll, P.E.

	By	Date		By	Date
Designed	CAH	12/13	Checked	TMH	12/13
Drawn	JRD	12/13	In Charge of	RAL	12/13

HNTB CORPORATION
340 County Road, Suite 6-C
Westbrook, ME 04092
TEL (207) 774-5155
FAX (207) 228-0909

MAINE TURNPIKE

THE GOLD STAR MEMORIAL HIGHWAY

MTA PROJECT MANAGER: Ralph C. Norwood, IV, P.E., P.T.O.E.

BRIDGE REPAIRS - STROUDWATER RIVER & MAINE CENTRAL RAILROAD

MAINE CENTRAL RAILROAD
MAINTENANCE OF TRAFFIC II

SHEET NUMBER: 10

CONTRACT: 2014.11

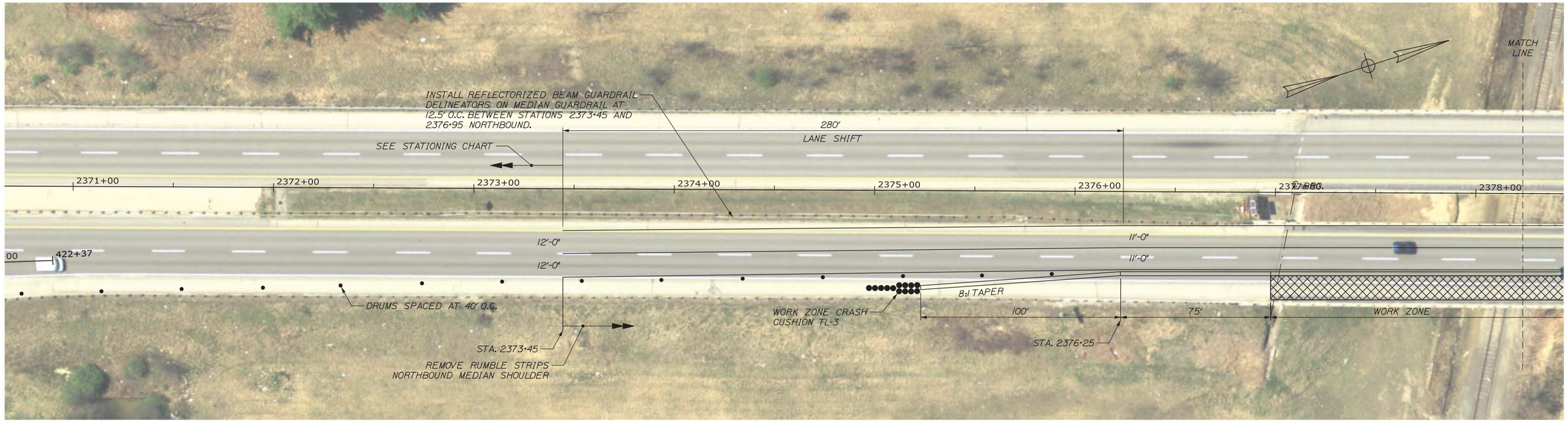

MCRR NORTHBOUND - PHASE I

1" = 25'

PHASE II SIMILAR - NO BARRIER

WORK ZONE EXTENDS INTO LANE 2

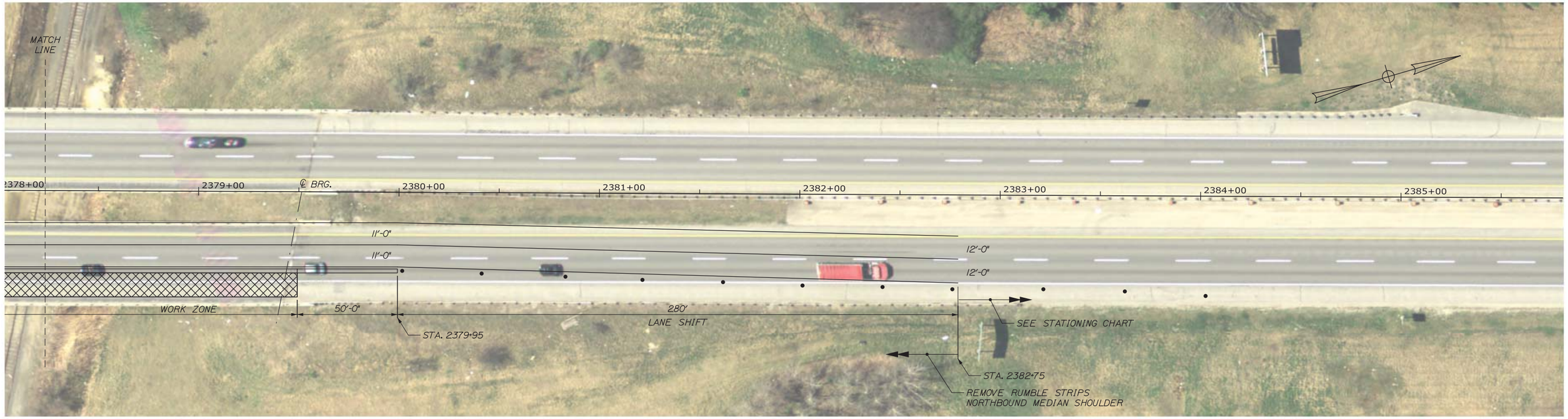

Scale: 25 0 25 50

No.	Revision	By	Date

Designed by: HNTB

CONSULTANT PROJECT MANAGER: Robert J. Driscoll, P.E.

	By	Date		By	Date
Designed	CAH	12/13	Checked	TMH	12/13
Drawn	JRD	12/13	In Charge of	RAL	12/13

HNTB CORPORATION
340 County Road, Suite 6-C
Westbrook, ME 04092
TEL (207) 774-5155
FAX (207) 228-0909

MAINE TURNPIKE

THE GOLD STAR MEMORIAL HIGHWAY

MTA PROJECT MANAGER: Ralph C. Norwood, IV, P.E., P.T.O.E.

BRIDGE REPAIRS - STROUDWATER RIVER & MAINE CENTRAL RAILROAD

MAINE CENTRAL RAILROAD MAINTENANCE OF TRAFFIC III

SHEET NUMBER: 11

CONTRACT: 2014.11

Date:12/19/2013

Filename: 011_MOT_MCRR_Aerial 1.dgn

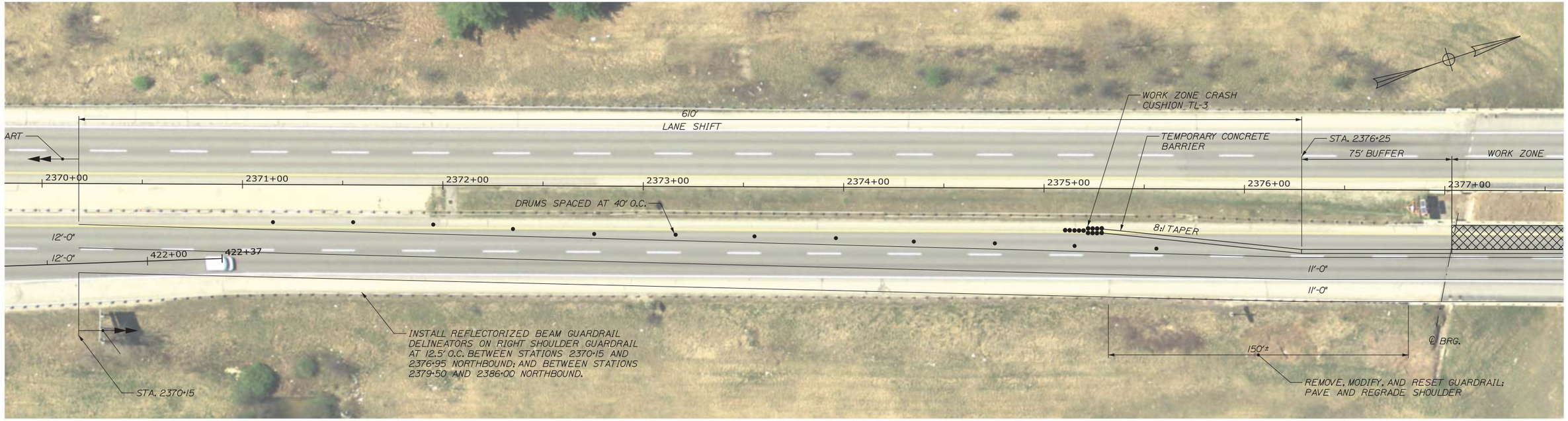

MCRR - PHASE IV

1" = 25'

PHASE III SIMILAR - NO BARRIER

WORK ZONE EXTENDS INTO LANE 2

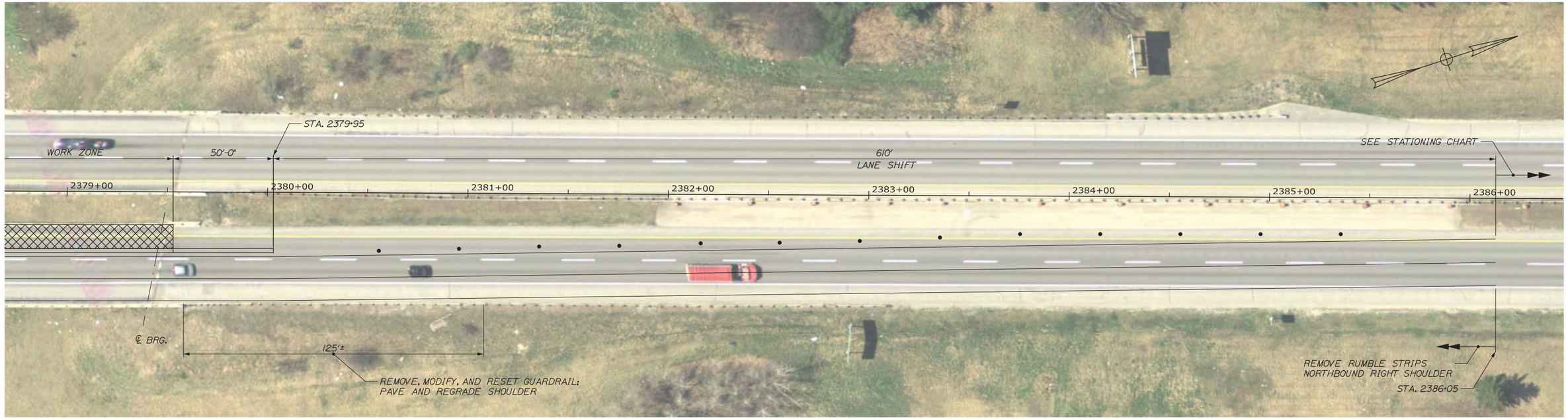

Scale: 25 0 25 50

No.	Revision	By	Date

Designed by: HNTB

CONSULTANT PROJECT MANAGER: Robert J. Driscoll, P.E.

	By	Date		By	Date
Designed	CAH	12/13	Checked	TMH	12/13
Drawn	JRD	12/13	In Charge of	RAL	12/13

HNTB CORPORATION
340 County Road, Suite 6-C
Westbrook, ME 04092
TEL (207) 774-5155
FAX (207) 228-0909

MAINE TURNPIKE

THE GOLD STAR MEMORIAL HIGHWAY

MTA PROJECT MANAGER: Ralph C. Norwood, IV, P.E., P.T.O.E.

BRIDGE REPAIRS - STROUDWATER RIVER & MAINE CENTRAL RAILROAD

MAINE CENTRAL RAILROAD MAINTENANCE OF TRAFFIC IV

SHEET NUMBER: 12

CONTRACT: 2014.11

Date:12/19/2013

Filename: 012_MOT_MCRR_Aerial_Phase_4.dgn

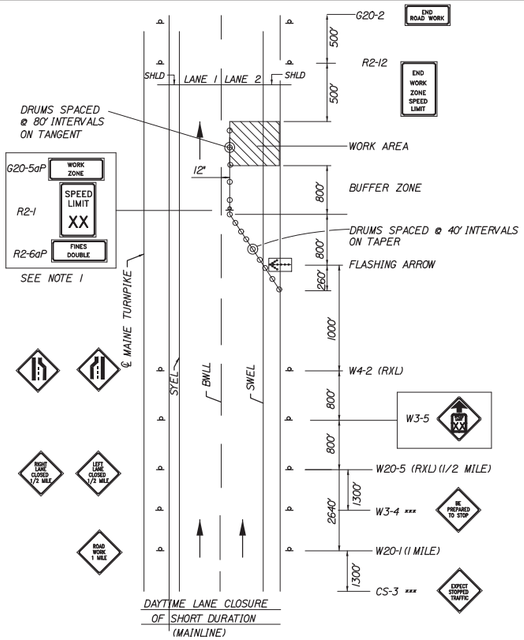

SINGLE LANE CLOSURE SIGNS ON EASELS

1. FOR EASEL SET UP ONLY. THIS SIGN IS NOT BRACKETED. ONE SIGN ASSEMBLY IS PLACED AT THE END OF THE TAPER .

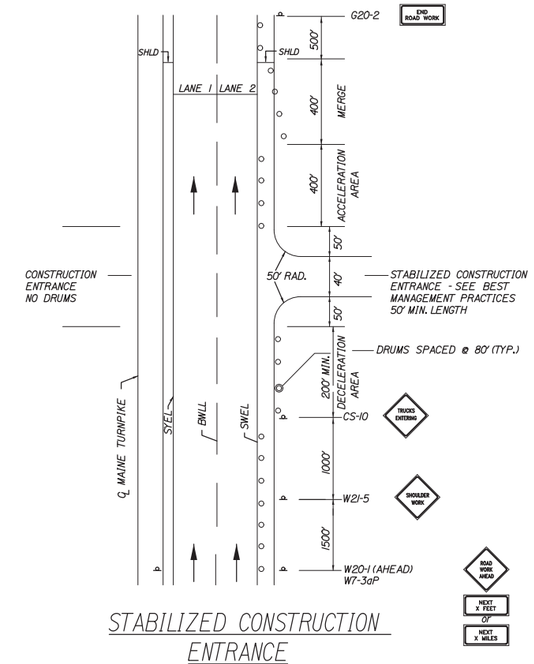

STABILIZED CONSTRUCTION ENTRANCE

1. SIGN G20-2 IS NOT REQUIRED IF ENTRANCE IS WITHIN THE WORK ZONE.

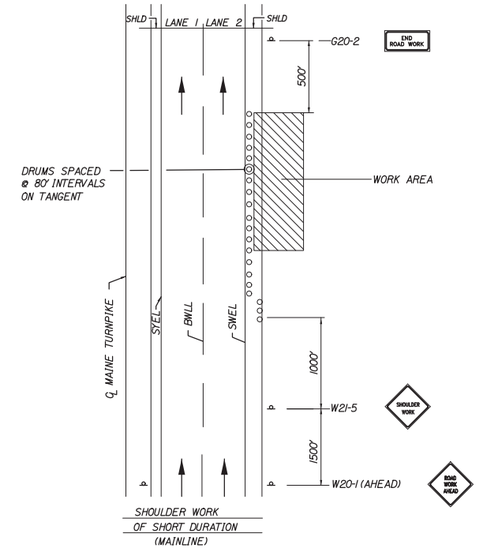

SHOULDER WORK

1. THE W20-1 AND G20-2 SIGNS ARE NOT REQUIRED IF THE SHOULDER CLOSURE IS WITHIN A PREVIOUSLY ESTABLISHED WORK ZONE.

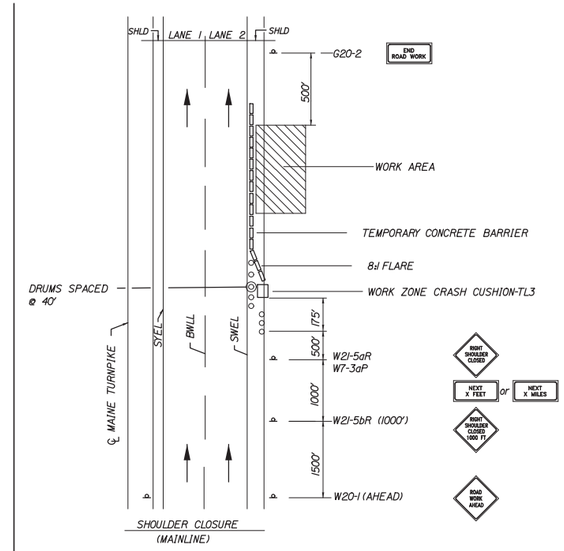

SHOULDER CLOSURE

1. THE W20-1 AND G20-2 SIGNS ARE NOT REQUIRED IF THE SHOULDER CLOSURE IS WITHIN A PREVIOUSLY ESTABLISHED WORK ZONE.

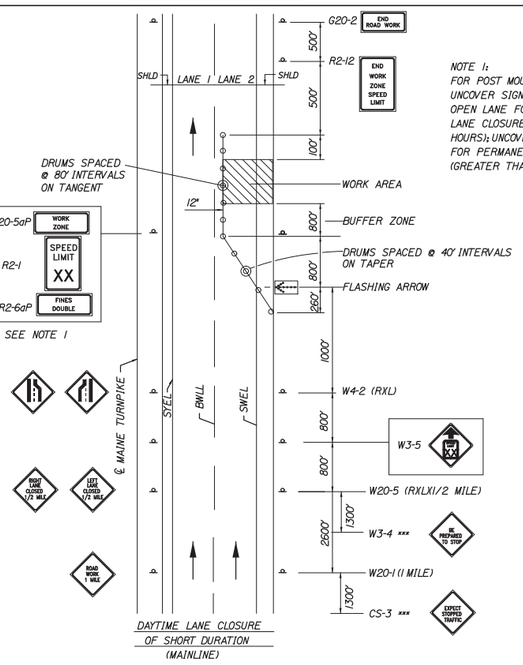

NOTE 1:
FOR POST MOUNTED SIGN SETUP UNCOVER SIGNS ADJACENT TO OPEN LANE FOR SHORT TERM LANE CLOSURE (LESS THAN 24 HOURS); UNCOVER BOTH SIGNS FOR PERMANENT LANE CLOSURE (GREATER THAN 24 HOURS).

SINGLE LANE CLOSURE - POST MOUNTED SIGN SETUP

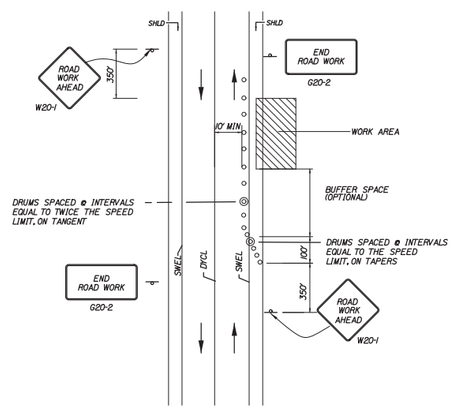

TEMP. LOCAL ROAD SHOULDER CLOSURE

NOTES:
1. FOR SHORT DURATION WORK (<1 HOUR), THE TAPER AND CHANNELIZATION DEVICES MAY BE OMITTED IF SHADOW VEHICLE IS PRESENT WITH ACTIVATED HIGH-INTENSITY ROTATING, FLASHING, OSCILLATING OR STROBE LIGHTS.

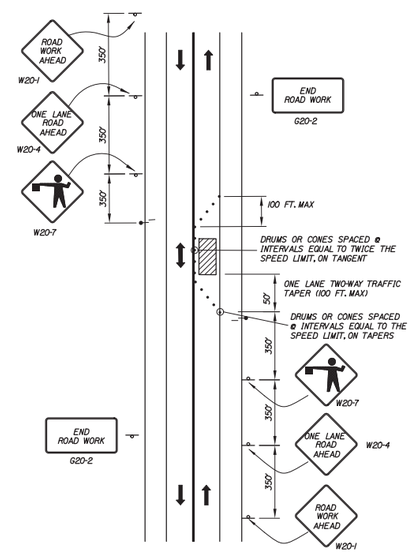

LOCAL ROAD SINGLE LANE CLOSURE

NOTES:
1. ROAD WORK AHEAD & END ROAD WORK SIGNS MAY BE OMITTED FOR SHORT DURATION OPERATIONS (LESS THAN 1 HOUR).

2. FLAGGERS SHALL BE LOCATED SO THEY ARE CLEARLY VISIBLE TO APPROACHING DRIVERS.

3. SIGN SPACING ASSUMES LOCAL ROAD SPEED IS 40 MPH OR LESS.

GENERAL MAINTENANCE OF TRAFFIC NOTES:

1. ALL PAVMENT STRIPING & SIGNING SHALL BE IN ACCORDANCE WITH THE "MANUAL ON UNIFORM TRAFFIC CONTROL DEVICES", U.S.D.O.T., F.H.W.A., LATEST EDITION.
2. THESE PLANS SHOW THE GENERAL CONDITION FOR TURNPIKE MAINLINE TRAFFIC CONTROL. DURING CONSTRUCTION, SLIGHT MODIFICATIONS IN CONSTRUCTION PROCEDURE MAY OCCUR AND MAY REQUIRE SOME MINOR ADJUSTMENTS TO BE MADE IN THE FIELD. ALL PROCEDURES MUST BE APPROVED BY THE RESIDENT.
3. THE CONTRACTOR SHALL REMOVE ALL PAVEMENT MARKINGS THAT CONFLICT WITH PROPOSED PAVEMENT MARKINGS IN ACCORDANCE WITH THE SPECIFICATIONS AND MUTCD. PAYMENT SHALL BE MADE UNDER ITEM 627.77 - REMOVING PAVEMENT MARKINGS.
4. EXPOSED BARRIER ENDS SHALL BE PROTECTED BY A WORK ZONE CRASH CUSHION. PAYMENT WILL BE UNDER ITEM 527.341 - WORK ZONE CRASH CUSHION - TL-3.
5. GEOMETRIC INFORMATION FOR TRAFFIC PHASES SHOWN ON THE PLANS WILL BE SUPPLIED TO THE CONTRACTOR AFTER AWARD.

ABBREVIATIONS FOR ALL M.O.T. PLANS

BWLL = BROKEN WHITE LANE LINE
SWLL = SOLID WHITE LANE LINE
SYLL = SOLID YELLOW LANE LINE
TBWLL - TEMPORARY BROKEN WHITE LANE LINE
TSWLL = TEMPORARY SOLID WHITE LANE LINE
TSYLL = TEMPORARY SOLID YELLOW LANE LINE

Date:12/19/2013

Filename: 013_TCPDetailsO1.dgn

Scale: N.T.S.

No.	Revision	By	Date

Designed by: HNTB

CONSULTANT PROJECT MANAGER: Robert J. Driscoll, P.E.

	By	Date		By	Date
Designed	CAH	12/13	Checked	TMH	12/13
Drawn	JRD	12/13	In Charge of	RAL	12/13

HNTB CORPORATION
340 County Road, Suite 6-C
Westbrook, ME 04092
TEL (207) 774-5155
FAX (207) 228-0909

MAINE TURNPIKE

THE GOLD STAR MEMORIAL HIGHWAY

MTA PROJECT MANAGER: Ralph C. Norwood, IV, P.E., P.T.O.E.

BRIDGE REPAIRS - STROUDWATER RIVER & MAINE CENTRAL RAILROAD

MAINTENANCE OF TRAFFIC DETAILS

SHEET NUMBER: 13

CONTRACT: 2014.11

IDENTIFICATION NUMBER	SIZE OF SIGN WIDTH	SIZE OF SIGN HEIGHT	TEXT	TEXT DIMENSIONS (INCHES) LETTER HEIGHT	TEXT DIMENSIONS (INCHES) VERTICAL SPACING	TEXT DIMENSIONS (INCHES) ARROW RTE. MKR.	NUMBER OF SIGNS REQUIRED	COLOR BACK-GROUND	COLOR LEGEND BORDER	BORDER RADIUS	AREA IN SQUARE FEET	NOTES
R1-1	48"	48"	STOP	TEXT DIMENSIONS SHALL CONFORM TO "STANDARD HIGHWAY SIGNS" - 2000			2	SHALL CONFORM TO "STANDARD HIGHWAY SIGNS" - 2000			16.00 (32)	
R1-2	60"x60"x60"		YIELD				2				12.50 (25)	
R2-1 (45)	48"	60"	SPEED LIMIT 45				6				20.00 (120)	
R2-6aP	48"	24"	FINES DOUBLED				6				8.00 (48)	
R2-12	36"	54"	END WORK ZONE SPEED LIMIT				8				13.50 (108.00)	
G20-5aP	48"	24"	WORK ZONE				6				8.00 (48.00)	
W3-1	48"	48"					2				16.00 (32)	
W3-2	48"	48"					2				16.00 (32)	
W4-5P	24"	30"	NO MERGE AREA				4				5.00 (20)	
W8-1	48"	48"	BUMP				8				16.00 (128.00)	
W8-15	48"	48"	GROOVED PAVEMENT				6				16.00 (96)	

IDENTIFICATION NUMBER	SIZE OF SIGN WIDTH	SIZE OF SIGN HEIGHT	TEXT	TEXT DIMENSIONS (INCHES) LETTER HEIGHT	TEXT DIMENSIONS (INCHES) VERTICAL SPACING	TEXT DIMENSIONS (INCHES) ARROW RTE. MKR.	NUMBER OF SIGNS REQUIRED	COLOR BACK-GROUND	COLOR LEGEND BORDER	BORDER RADIUS	AREA IN SQUARE FEET	NOTES
W8-15P	30"	24"		TEXT DIMENSIONS SHALL CONFORM TO "STANDARD HIGHWAY SIGNS" - 2000			6	SHALL CONFORM TO "STANDARD HIGHWAY SIGNS" - 2000			5.00 (30)	
W8-24	48"	48"	STEEL PLATE AHEAD				4				16.00 (64)	
W20-1 (AHEAD) (1 MILE)	48"	48"	ROAD WORK XXX				4 8				16.00 (64) 16.00 (128)	
W20-5L (AHEAD) (1/2 MILE)	48"	48"	LEFT LANE CLOSED XXX				2 8				16.00 (32) 16.00 (128)	
W20-5R (AHEAD) (1/2 MILE)	48"	48"	RIGHT LANE CLOSED XXX				2 8				16.00 (32) 16.00 (128)	
W21-5aL	48"	48"	LEFT SHOULDER CLOSED				2				16.00 (32)	
W21-5aR	48"	48"	RIGHT SHOULDER CLOSED				2				16.00 (32)	
W21-5bL (1000 FT)	48"	48"	LEFT SHOULDER CLOSED XXX				2				16.00 (32)	
W21-5bR (1000 FT)	48"	48"	RIGHT SHOULDER CLOSED XXX				2				16.00 (32)	

Date:12/19/2013

Filename: 014_SignSummary1.dgn

Scale:

No.	Revision	By	Date

Designed by:

HNTB

CONSULTANT PROJECT MANAGER: Robert J. Driscoll

	By	Date		By	Date
Designed	CAH	12/13	Checked	TMH	12/13
Drawn	JRD	12/13	In Charge of	RAL	12/13

HNTB CORPORATION
340 County Road, Suite 6-C
Westbrook, ME 04092
TEL (207) 774-5155
FAX (207) 228-0909

MAINE TURNPIKE

THE GOLD STAR MEMORIAL HIGHWAY

MTA PROJECT MANAGER: Ralph C. Norwood, IV, P.E., P.T.O.E.

BRIDGE REPAIRS – STROUDWATER RIVER & MAINE CENTRAL RAILROAD

MAINTENANCE OF TRAFFIC SIGN SUMMARY I

SHEET NUMBER: 14

CONTRACT: 2014.11

IDENTIFICATION NUMBER	SIZE OF SIGN WIDTH	SIZE OF SIGN HEIGHT	TEXT	TEXT DIMENSIONS (INCHES) LETTER HEIGHT	TEXT DIMENSIONS (INCHES) VERTICAL SPACING	TEXT DIMENSIONS (INCHES) ARROW RTE. MKR.	NUMBER OF SIGNS REQUIRED	COLOR BACK-GROUND	COLOR LEGEND BORDER	BORDER RADIUS	AREA IN SQUARE FEET	NOTES
G20-2	48"	24"	END ROAD WORK	TEXT DIMENSIONS SHALL CONFORM TO "STANDARD HIGHWAY SIGNS" - 2000			8	SHALL CONFORM TO "STANDARD HIGHWAY SIGNS" - 2000			8.00 (64)	
W3-4	48"	48"	BE PREPARED TO STOP				8				16.00 (128)	
W24-1R	48"	48"					4				16.00 (64.00)	
W24-1L	48"	48"					4				16.00 (64.00)	
W24-1aR	48"	48"					4				16.00 (64.00)	
W24-1aL	48"	48"					4				16.00 (64.00)	
CS-43	48"	24"	AFTER PLAZA	6" 6"	4.5" 4.5"		4	ORANGE	BLACK		8.00 (32.00)	
CS-52	48"	24"	NORTH BOUND	6" 6"	4.5" 4.5"		4				8.00 (32.00)	
CS-3	48"	48"	EXPECT STOPPED TRAFFIC	6" 6" 6"	4" 4"		4				16.00 (64.00)	

IDENTIFICATION NUMBER	SIZE OF SIGN WIDTH	SIZE OF SIGN HEIGHT	TEXT	TEXT DIMENSIONS (INCHES) LETTER HEIGHT	TEXT DIMENSIONS (INCHES) VERTICAL SPACING	TEXT DIMENSIONS (INCHES) ARROW RTE. MKR.	NUMBER OF SIGNS REQUIRED	COLOR BACK-GROUND	COLOR LEGEND BORDER	BORDER RADIUS	AREA IN SQUARE FEET	NOTES
W3-5 (45)	48"	48"	SPEED LIMIT 45	TEXT DIMENSIONS SHALL CONFORM TO "STANDARD HIGHWAY SIGNS" - 2000			10	SHALL CONFORM TO "STANDARD HIGHWAY SIGNS" - 2000			16.00 (160.00)	
W4-2L	48"	48"					8				16.00 (128.00)	
W4-2R	48"	48"					8				16.00 (128.00)	

Date:12/19/2013

Filename: 015_SignSummary2.dgn

Scale:

No.	Revision	By	Date

Designed by:

HNTB

CONSULTANT PROJECT MANAGER: Robert J. Driscoll

	By	Date		By	Date
Designed	CAH	12/13	Checked	TMH	12/13
Drawn	JRD	12/13	In Charge of	RAL	12/13

HNTB CORPORATION
340 County Road, Suite 6-C
Westbrook, ME 04092
TEL (207) 774-5155
FAX (207) 228-0909

MAINE TURNPIKE

THE GOLD STAR MEMORIAL HIGHWAY

MTA PROJECT MANAGER: Ralph C. Norwood, IV, P.E., P.T.O.E.

BRIDGE REPAIRS – STROUDWATER RIVER & MAINE CENTRAL RAILROAD

MAINTENANCE OF TRAFFIC SIGN SUMMARY II

SHEET NUMBER: 15

CONTRACT: 2014.11

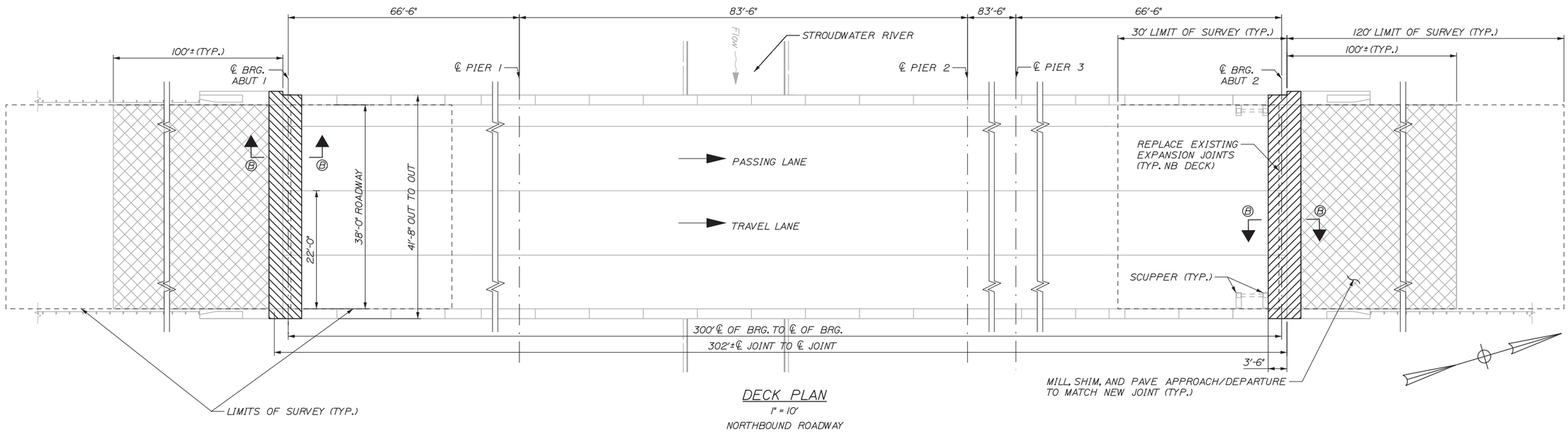

DECK PLAN

1" = 10'

NORTHBOUND ROADWAY

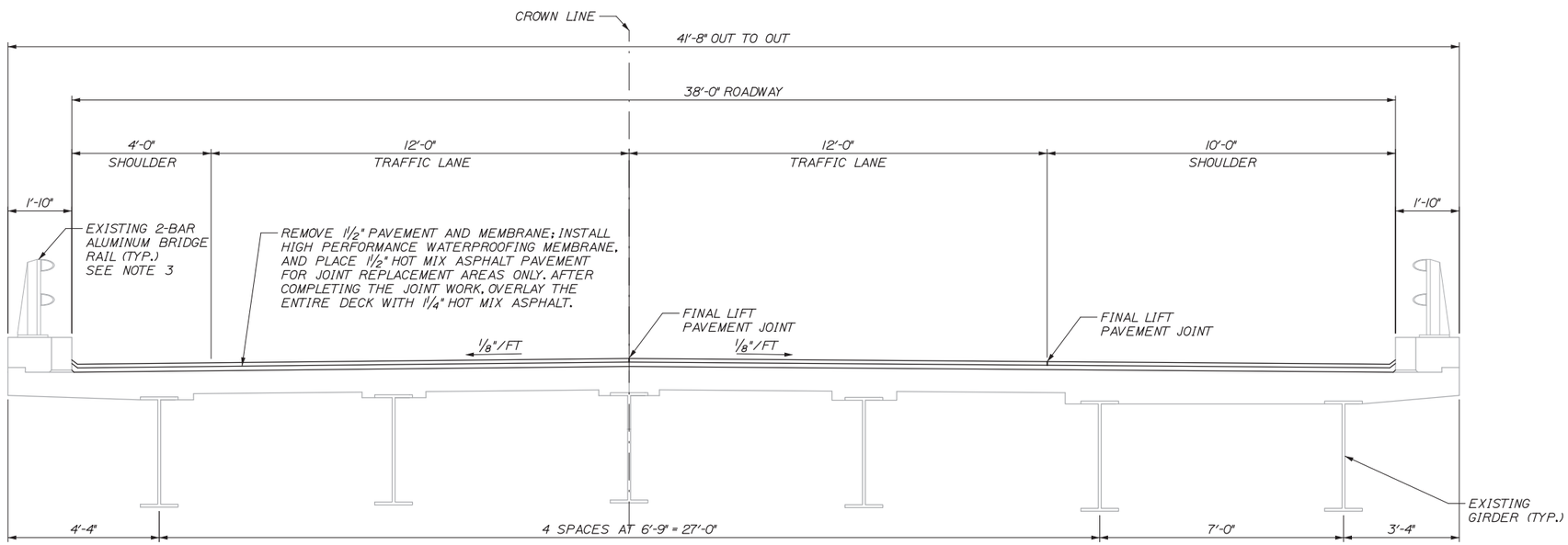

TRANSVERSE SECTION

½" = 1'-0"

(LOOKING NORTH)

LEGEND:

APPROXIMATE LIMITS OF JOINT REPLACEMENT

APPROXIMATE LIMITS OF PERMANENT MILL, SHIM, AND PAVE

NOTES:

1. APPROACH AREAS REQUIRING SHIM PAVEMENT TO REACH FINAL PAVEMENT GRADE SHALL NOT BE MILLED.

2. SEAL DECK SHOULDERS WITH TWO APPLICATIONS OF EMULSIFIED BITUMINOUS SEALER PER MDOT STANDARD SPECIFICATION 403.03 e AFTER COMPLETING ALL DECK PAVING WORK.

3. RETROFIT ALL EXISTING ALUMINUM BRIDGE RAIL SPLICES NOT IN CONFORMANCE WITH THE ALUMINUM BRIDGE RAILING - SPLICE MODIFICATION DETAIL ON SHEET 28. PAYMENT TO BE MADE UNDER 507.095.

4. THE CONTRACTOR SHALL SURVEY DECK AND APPROACH/DEPARTURE ROADWAYS (CURB, SYLL, BWLL, SWLL, CURB) AT 10' O.C. WITHIN THE LIMITS SHOWN ON THE PLANS AND PROVIDE THE INFORMATION FOR THE RESIDENT TO DETERMINE APPROACH/DEPARTURE MILLING AND PAVING LIMITS (TYP. NORTHBOUND AND SOUTHBOUND DECKS).

5. SEE SHEET 22 JOINT DETAILS I FOR SECTION B-B.

6. SEE SHEETS 29 AND 30 FOR TEMPORARY DECK PLATING AND PAVEMENT DETAILS.

Date:12/19/2013

Filename: 016_Stroudwater_Northbound_Typ_Section.dgn

Scale: AS NOTED

No.	Revision	By	Date

Designed by: HNTB

CONSULTANT PROJECT MANAGER: Robert J. Driscoll, P.E.

	By	Date		By	Date
Designed	CAH	12/13	Checked	JDW	12/13
Drawn	JRD	12/13	In Charge of	RAL	12/13

HNTB CORPORATION
340 County Road, Suite 6-C
Westbrook, ME 04092
TEL (207) 774-5155
FAX (207) 228-0909

MAINE TURNPIKE

THE GOLD STAR MEMORIAL HIGHWAY

MTA PROJECT MANAGER: Ralph C. Norwood, IV, P.E., P.T.O.E.

BRIDGE REPAIRS - STROUDWATER RIVER & MAINE CENTRAL RAILROAD

STROUDWATER RIVER NORTHBOUND DECK PLAN AND TYPICAL SECTION

SHEET NUMBER: 16

CONTRACT: 2014.11

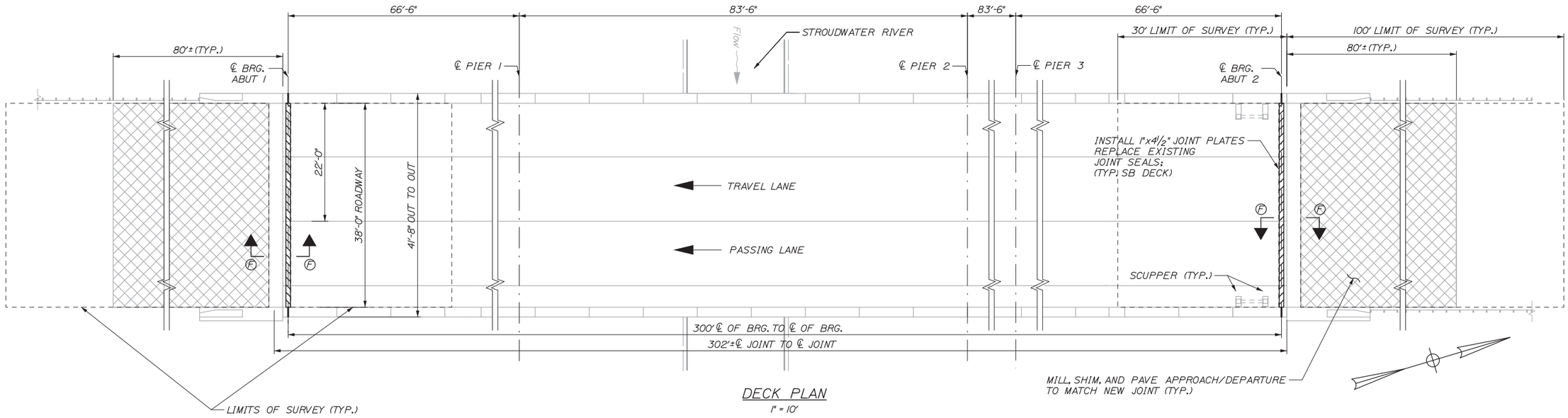

DECK PLAN

1" = 10'

SOUTHBOUND ROADWAY

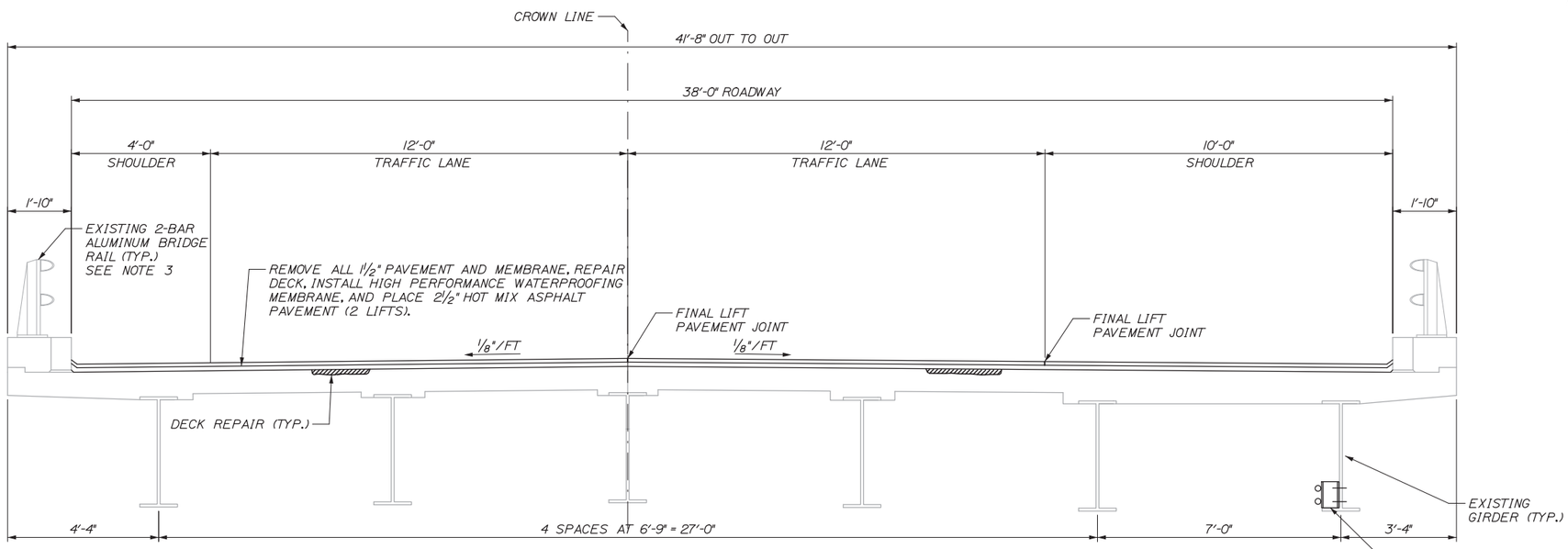

TRANSVERSE SECTION

½" = 1'-0"

(LOOKING SOUTH)

LEGEND:

- APPROXIMATE LIMITS OF JOINT REPAIR
- APPROXIMATE LIMITS OF PERMANENT MILL, SHIM, AND PAVE

NOTES:

1. APPROACH AREAS REQUIRING SHIM PAVEMENT TO REACH FINAL PAVEMENT GRADE SHALL NOT BE MILLED.
2. SEAL DECK SHOULDERS WITH TWO APPLICATIONS OF EMULSIFIED BITUMINOUS SEALER PER MDOT STANDARD SPECIFICATION 403.03 e AFTER COMPLETING ALL DECK PAVING WORK.
3. RETROFIT ALL EXISTING ALUMINUM BRIDGE RAIL SPLICES NOT IN CONFORMANCE WITH THE ALUMINUM BRIDGE RAILING - SPLICE MODIFICATION DETAIL ON SHEET 28. PAYMENT TO BE MADE UNDER 507.095.
4. THE CONTRACTOR SHALL SURVEY DECK AND APPROACH/DEPARTURE ROADWAYS (CURB, SYLL, BWLL, SWLL, CURB) AT 10' O.C. WITHIN THE LIMITS SHOWN ON THE PLANS AND PROVIDE THE INFORMATION FOR THE RESIDENT TO DETERMINE APPROACH/DEPARTURE MILLING AND PAVING LIMITS (TYP. NORTHBOUND AND SOUTHBOUND DECKS).
5. SEE SHEET 23 JOINT DETAILS II FOR SECTION F-F.

Date:12/19/2013

Filename: 017_Stroudwater_Southbound_Typ_Section.dgn

Scale: AS NOTED			
No.	Revision	By	Date

Designed by: HNTB

CONSULTANT PROJECT MANAGER: Robert J. Driscoll, P.E.

	By	Date		By	Date
Designed	CAH	12/13	Checked	JDW	12/13
Drawn	JRD	12/13	In Charge of	RAL	12/13

HNTB CORPORATION
340 County Road, Suite 6-C
Westbrook, ME 04092
TEL (207) 774-5155
FAX (207) 228-0909

MAINE TURNPIKE

THE GOLD STAR MEMORIAL HIGHWAY

MTA PROJECT MANAGER: Ralph C. Norwood, IV, P.E., P.T.O.E.

BRIDGE REPAIRS - STROUDWATER RIVER & MAINE CENTRAL RAILROAD

STROUDWATER RIVER SOUTHBOUND DECK PLAN AND TYPICAL SECTION

SHEET NUMBER: 17

CONTRACT: 2014.11

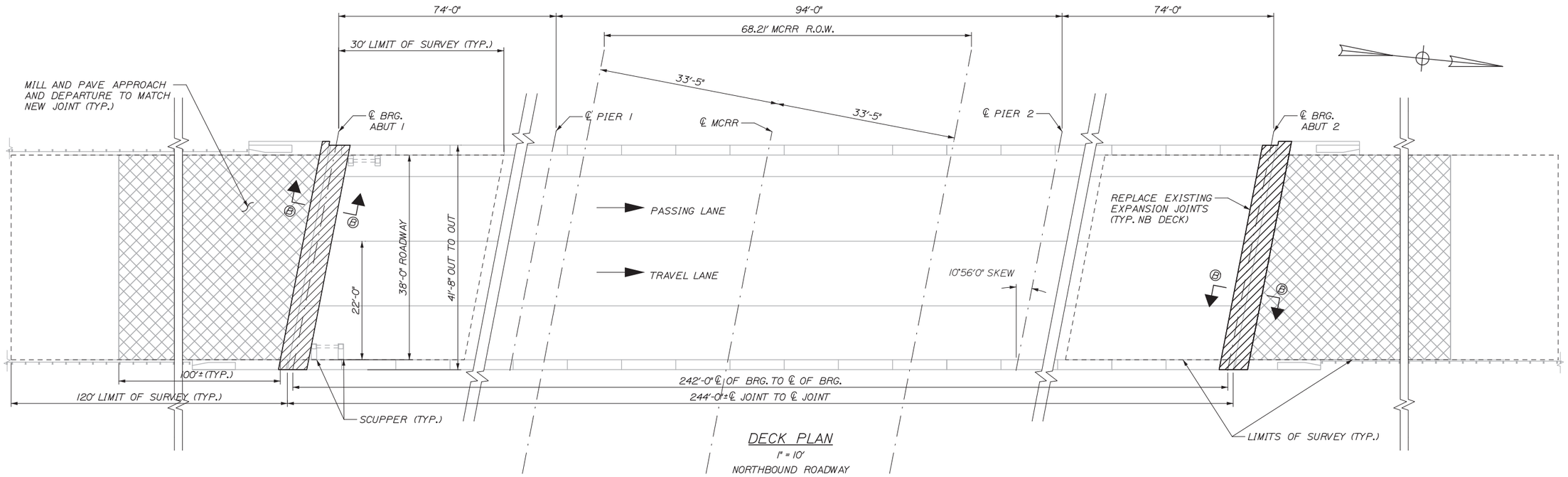

DECK PLAN
1" = 10'
NORTHBOUND ROADWAY

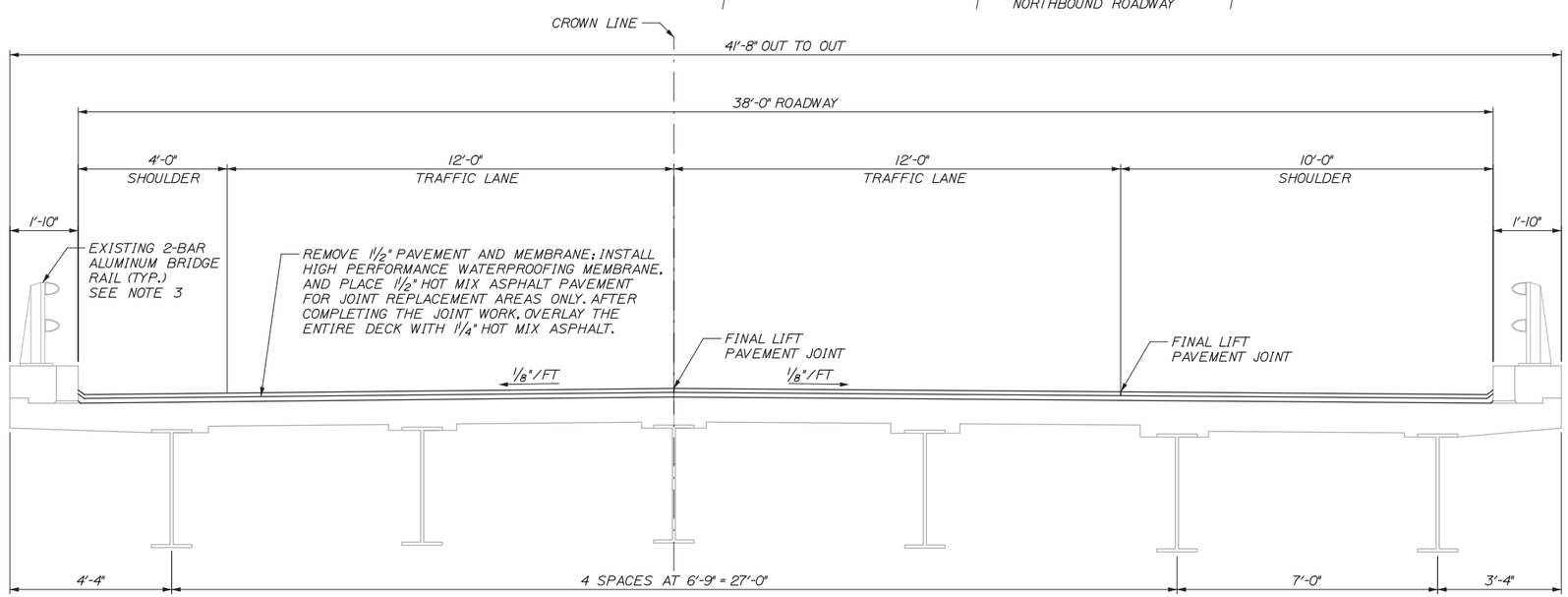

TRANSVERSE SECTION
½" = 1'-0"
(LOOKING NORTH)

LEGEND:

APPROXIMATE LIMITS OF JOINT REPLACEMENT

APPROXIMATE LIMITS OF PERMANENT MILL, SHIM, AND PAVE

NOTES:

1. APPROACH AREAS REQUIRING SHIM PAVEMENT TO REACH FINAL PAVEMENT GRADE SHALL NOT BE MILLED.

2. SEAL DECK SHOULDERS WITH TWO APPLICATIONS OF EMULSIFIED BITUMINOUS SEALER PER MDOT STANDARD SPECIFICATION 403.03 e AFTER COMPLETING ALL DECK PAVING WORK.

3. RETROFIT ALL EXISTING ALUMINUM BRIDGE RAIL SPLICES NOT IN CONFORMANCE WITH THE ALUMINUM BRIDGE RAILING - SPLICE MODIFICATION DETAIL ON SHEET 28. PAYMENT TO BE MADE UNDER 507.095.

4. THE CONTRACTOR SHALL SURVEY DECK AND APPROACH/DEPARTURE ROADWAYS (CURB, SYLL, BWLL, SWLL, CURB) AT 10' O.C. WITHIN THE LIMITS SHOWN ON THE PLANS AND PROVIDE THE INFORMATION FOR THE RESIDENT TO DETERMINE APPROACH/DEPARTURE MILLING AND PAVING LIMITS (TYP. NORTHBOUND AND SOUTHBOUND DECKS).

5. SEE SHEET 22 JOINT DETAILS 1 FOR SECTION B-B.

6. SEE SHEETS 29 AND 30 FOR TEMPORARY DECK PLATING AND PAVEMENT DETAILS.

Date:12/19/2013

Filename: 018_MCRR_Northbound_Typ_Section.dgn

Scale: AS NOTED

No.	Revision	By	Date

Designed by: HNTB

CONSULTANT PROJECT MANAGER: Robert J. Driscoll, P.E.

	By	Date		By	Date
Designed	CAH	12/13	Checked	JDW	12/13
Drawn	JRD	12/13	In Charge of	RAL	12/13

HNTB CORPORATION
340 County Road, Suite 6-C
Westbrook, ME 04092
TEL (207) 774-5155
FAX (207) 228-0909

MAINE TURNPIKE

THE GOLD STAR MEMORIAL HIGHWAY

MTA PROJECT MANAGER: Ralph C. Norwood, IV, P.E., P.T.O.E.

BRIDGE REPAIRS - STROUDWATER RIVER & MAINE CENTRAL RAILROAD

MAINE CENTRAL RAILROAD NORTHBOUND DECK PLAN AND TYPICAL SECTION

SHEET NUMBER: 18

CONTRACT: 2014.11

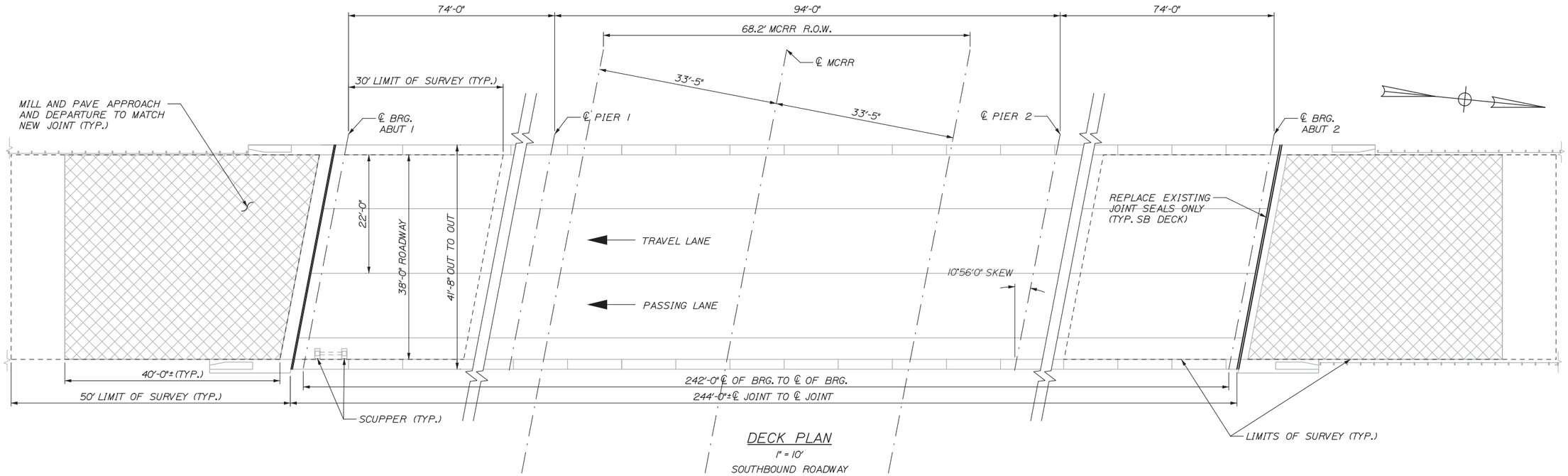

DECK PLAN

1" = 10'

SOUTHBOUND ROADWAY

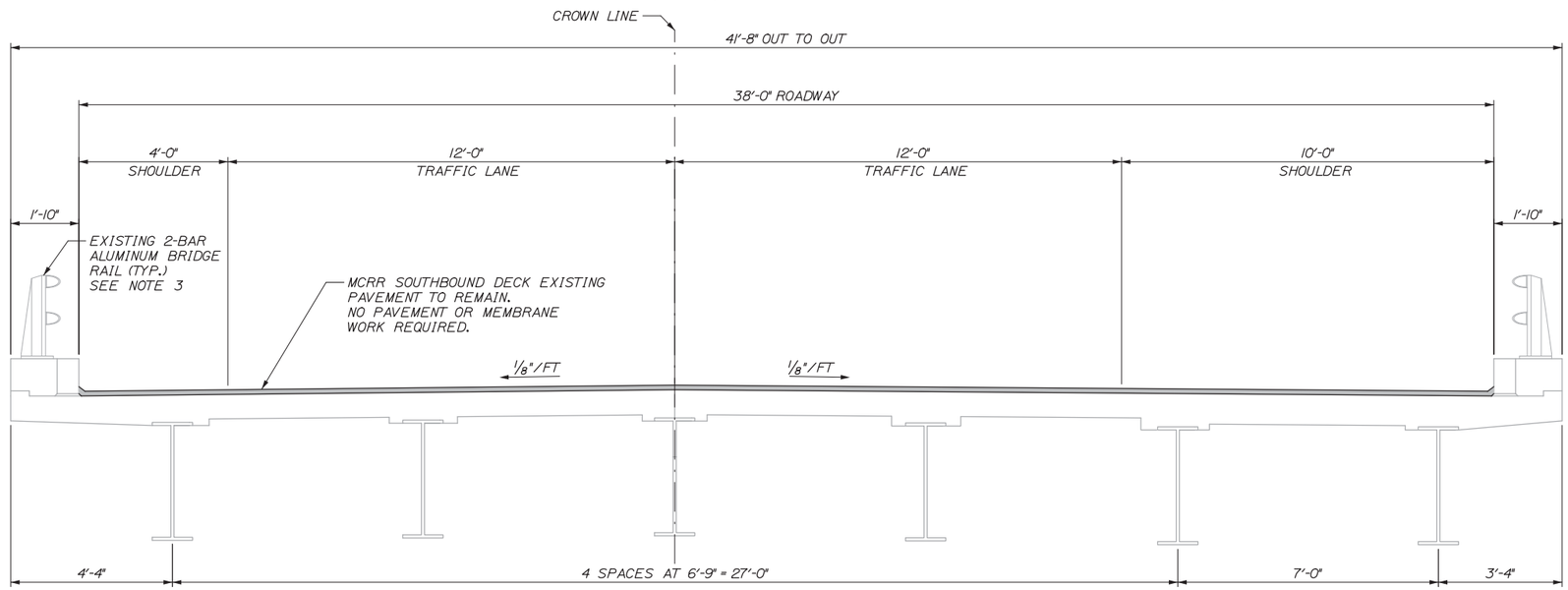

TRANSVERSE SECTION

1/2" = 1'-0"

(LOOKING SOUTH)

LEGEND:

APPROXIMATE LIMITS OF PERMANENT MILL, SHIM, AND PAVE

NOTES:

1. APPROACH AREAS REQUIRING SHIM PAVEMENT TO REACH FINAL PAVEMENT GRADE SHALL NOT BE MILLED.

2. SEAL DECK SHOULDERS WITH TWO APPLICATIONS OF EMULSIFIED BITUMINOUS SEALER PER MDOT STANDARD SPECIFICATION 403.03 e AFTER COMPLETING ALL DECK PAVING WORK.

3. RETROFIT ALL EXISTING ALUMINUM BRIDGE RAIL SPLICES NOT IN CONFORMANCE WITH THE ALUMINUM BRIDGE RAILING - SPLICE MODIFICATION DETAIL ON SHEET 28. PAYMENT TO BE MADE UNDER 507.095.

4. THE CONTRACTOR SHALL SURVEY DECK AND APPROACH/DEPARTURE ROADWAYS (CURB, SYLL, BWLL, SWLL, CURB) AT 10' O.C. WITHIN THE LIMITS SHOWN ON THE PLANS AND PROVIDE THE INFORMATION FOR THE RESIDENT TO DETERMINE APPROACH/DEPARTURE MILLING AND PAVING LIMITS (TYP. NORTHBOUND AND SOUTHBOUND DECKS).

Date:12/19/2013

Filename: 019_MCRR_Southbound_Typ_Section.dgn

Scale: AS NOTED

No.	Revision	By	Date

Designed by: HNTB

CONSULTANT PROJECT MANAGER: Robert J. Driscoll, P.E.

	By	Date		By	Date
Designed	CAH	12/13	Checked	JDW	12/13
Drawn	JRD	12/13	In Charge of	RAL	12/13

HNTB CORPORATION
340 County Road, Suite 6-C
Westbrook, ME 04092
TEL (207) 774-5155
FAX (207) 228-0909

MAINE TURNPIKE

THE GOLD STAR MEMORIAL HIGHWAY

MTA PROJECT MANAGER: Ralph C. Norwood, IV, P.E., P.T.O.E.

BRIDGE REPAIRS - STROUDWATER RIVER & MAINE CENTRAL RAILROAD

MAINE CENTRAL RAILROAD SOUTHBOUND DECK PLAN AND TYPICAL SECTION

SHEET NUMBER: 19

CONTRACT: 2014.11

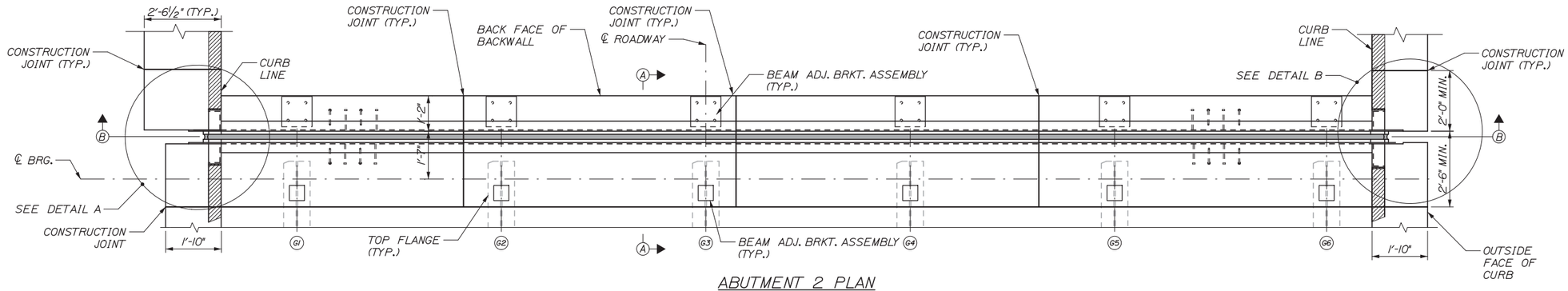

ABUTMENT 2 PLAN

½" = 1'-0"

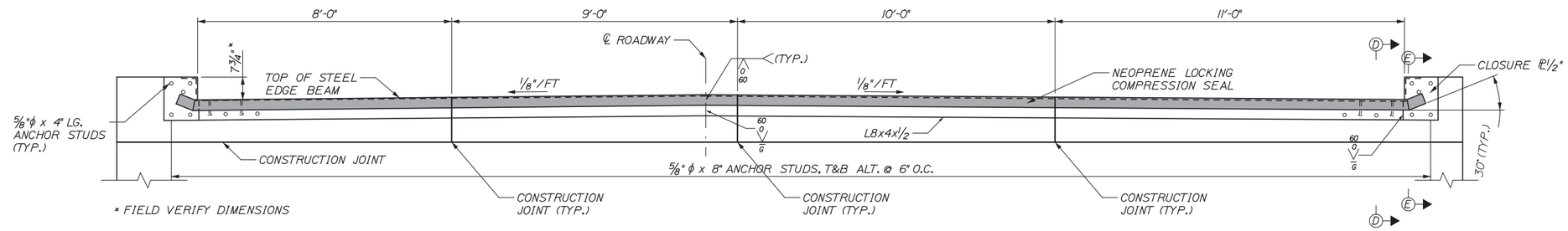

SECTION B-B

½" = 1'-0"

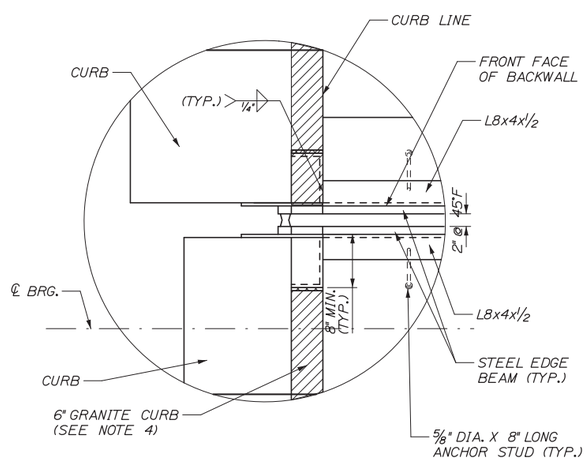

DETAIL A

1" = 1'-0"

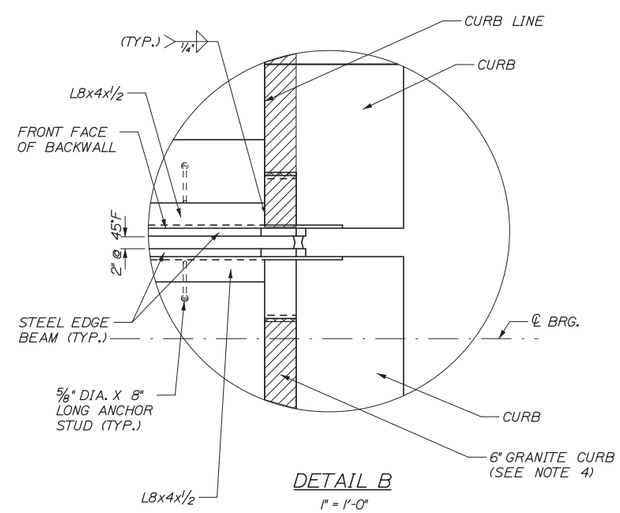

DETAIL B

1" = 1'-0"

NOTES:

1. ABUTMENT 2 EXPANSION JOINT ASSEMBLY SHOWN. ABUTMENT 1 JOINT ASSEMBLY SIMILAR.
2. FOR NOTES AND DETAILS NOT SHOWN SEE SHEETS 22 AND 23.
3. EXISTING GRANITE CURB TO BE SALVAGED. PAYMENT FOR REMOVING, STORING AND RESETTING THE GRANITE CURB SHALL BE INCIDENTAL TO PAY ITEM 520.2211.
4. ALUMINUM BRIDGE RAIL NOT SHOWN FOR CLARITY.
5. EXPANSION JOINT ASSEMBLIES SHALL BE FABRICATED AND HOT DIP GALVANIZED AS A UNIT; AND AFTER GALVANIZING FIELD SPLICES SHALL BE FABRICATION SHOP SAWN. ADEQUATE TEMPORARY ADJUSTMENT ANGLES SHALL BE INSTALLED ON THE EXPANSION JOINT ASSEMBLY DURING FABRICATION TO MAINTAIN THE JOINT GEOMETRY DURING GALVANIZING, SHOP SAWING, SHIPPING AND FIELD INSTALLATION.
6. PROVIDE TEMPORARY SUPPORT BARS, RODS, ETC., TO HOLD JOINT ARMOR IN SET POSITION WHILE DECK AND BACKWALL CONCRETE IS CAST AND CURED.
7. PROVIDE HOLES IN JOINT ARMOR TO VENT CONCRETE.

Date:12/19/2013

Filename: 020_SR-joints1.dgn

Scale: AS NOTED			
No.	Revision	By	Date

Designed by: HNTB

CONSULTANT PROJECT MANAGER: Robert J. Driscoll, P.E.

	By	Date		By	Date
Designed	CAH	12/13	Checked	JDW	12/13
Drawn	JRD	12/13	In Charge of	RAL	12/13

HNTB CORPORATION
340 County Road, Suite 6-C
Westbrook, ME 04092
TEL (207) 774-5155
FAX (207) 228-0909

MAINE TURNPIKE

THE GOLD STAR MEMORIAL HIGHWAY

MTA PROJECT MANAGER: Ralph C. Norwood, IV, P.E., P.T.O.E.

BRIDGE REPAIRS - STROUDWATER RIVER & MAINE CENTRAL RAILROAD

STROUDWATER RIVER NORTHBOUND BRIDGE JOINT MODIFICATIONS

SHEET NUMBER: 20

CONTRACT: 2014.11

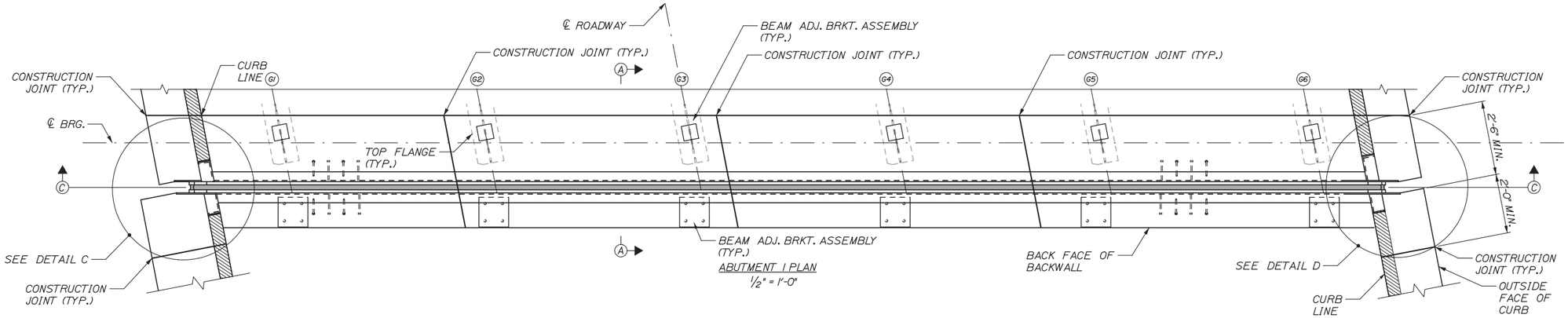

ABUTMENT 1 PLAN
1/2" = 1'-0"

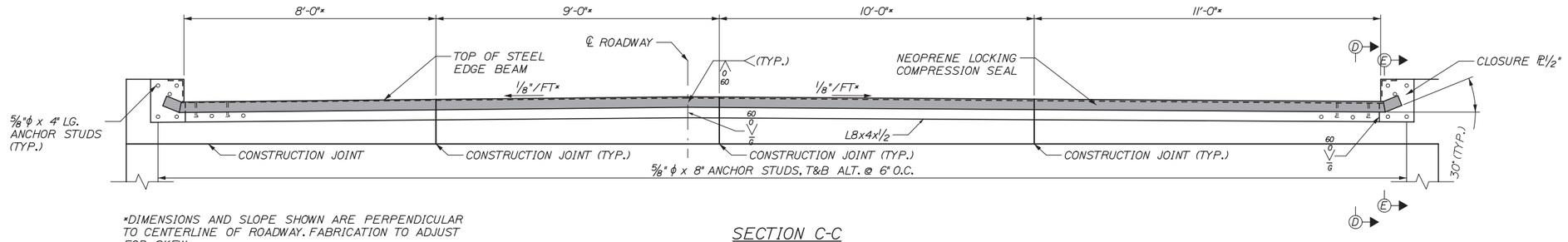

*DIMENSIONS AND SLOPE SHOWN ARE PERPENDICULAR TO CENTERLINE OF ROADWAY. FABRICATION TO ADJUST FOR SKEW.

SECTION C-C
1/2" = 1'-0"

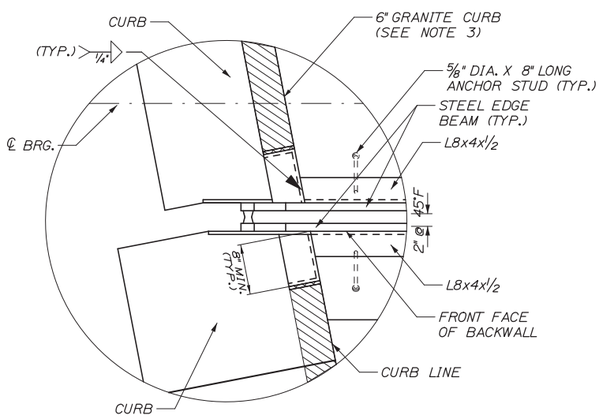

DETAIL C
1" = 1'-0"

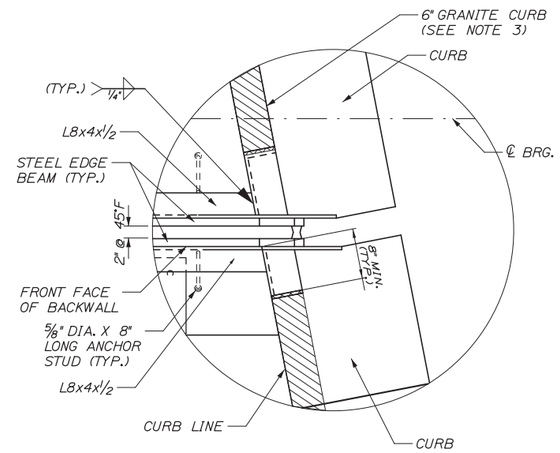

DETAIL D
1" = 1'-0"

NOTES:

1. ABUTMENT 1 EXPANSION JOINT ASSEMBLY SHOWN. ABUTMENT 2 JOINT ASSEMBLY SIMILAR.
2. FOR NOTES AND DETAILS NOT SHOWN SEE SHEETS 22 AND 23.
3. EXISTING GRANITE CURB TO BE SALVAGED. PAYMENT FOR REMOVING, STORING AND RESETTING THE GRANITE CURB SHALL BE INCIDENTAL TO PAY ITEMS 520.2225 AND 520.2227.
4. ALUMINUM BRIDGE RAIL NOT SHOWN FOR CLARITY.
5. EXPANSION JOINT ASSEMBLIES SHALL BE FABRICATED AND HOT DIP GALVANIZED AS A UNIT; AND AFTER GALVANIZING FIELD SPLICES SHALL BE FABRICATION SHOP SAWN. ADEQUATE TEMPORARY ADJUSTMENT ANGLES SHALL BE INSTALLED ON THE EXPANSION JOINT ASSEMBLY DURING FABRICATION TO MAINTAIN THE JOINT GEOMETRY DURING GALVANIZING, SHOP SAWING, SHIPPING AND FIELD INSTALLATION.
6. PROVIDE TEMPORARY SUPPORT BARS, RODS, ETC., TO HOLD JOINT ARMOR IN SET POSITION WHILE DECK AND BACKWALL CONCRETE IS CAST AND CURED.
7. PROVIDE HOLES IN JOINT ARMOR TO VENT CONCRETE.

Date:12/19/2013

Filename: 021_MCRR-joints1.dgn

Scale: AS NOTED			
No.	Revision	By	Date

Designed by: HNTB

CONSULTANT PROJECT MANAGER: Robert J. Driscoll, P.E.

	By	Date		By	Date
Designed	CAH	12/13	Checked	JDW	12/13
Drawn	JRD	12/13	In Charge of	RAL	12/13

HNTB CORPORATION
340 County Road, Suite 6-C
Westbrook, ME 04092
TEL (207) 774-5155
FAX (207) 228-0909

MAINE TURNPIKE

THE GOLD STAR MEMORIAL HIGHWAY

MTA PROJECT MANAGER: Ralph C. Norwood, IV, P.E., P.T.O.E.

BRIDGE REPAIRS - STROUDWATER RIVER & MAINE CENTRAL RAILROAD

MAINE CENTRAL RAILROAD NORTHBOUND BRIDGE JOINT MODIFICATIONS

SHEET NUMBER: 21

CONTRACT: 2014.11

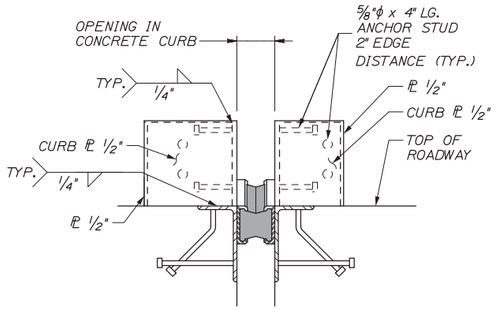

SECTION D-D
N.T.S.

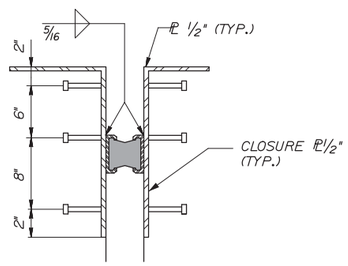

SECTION E-E
N.T.S.

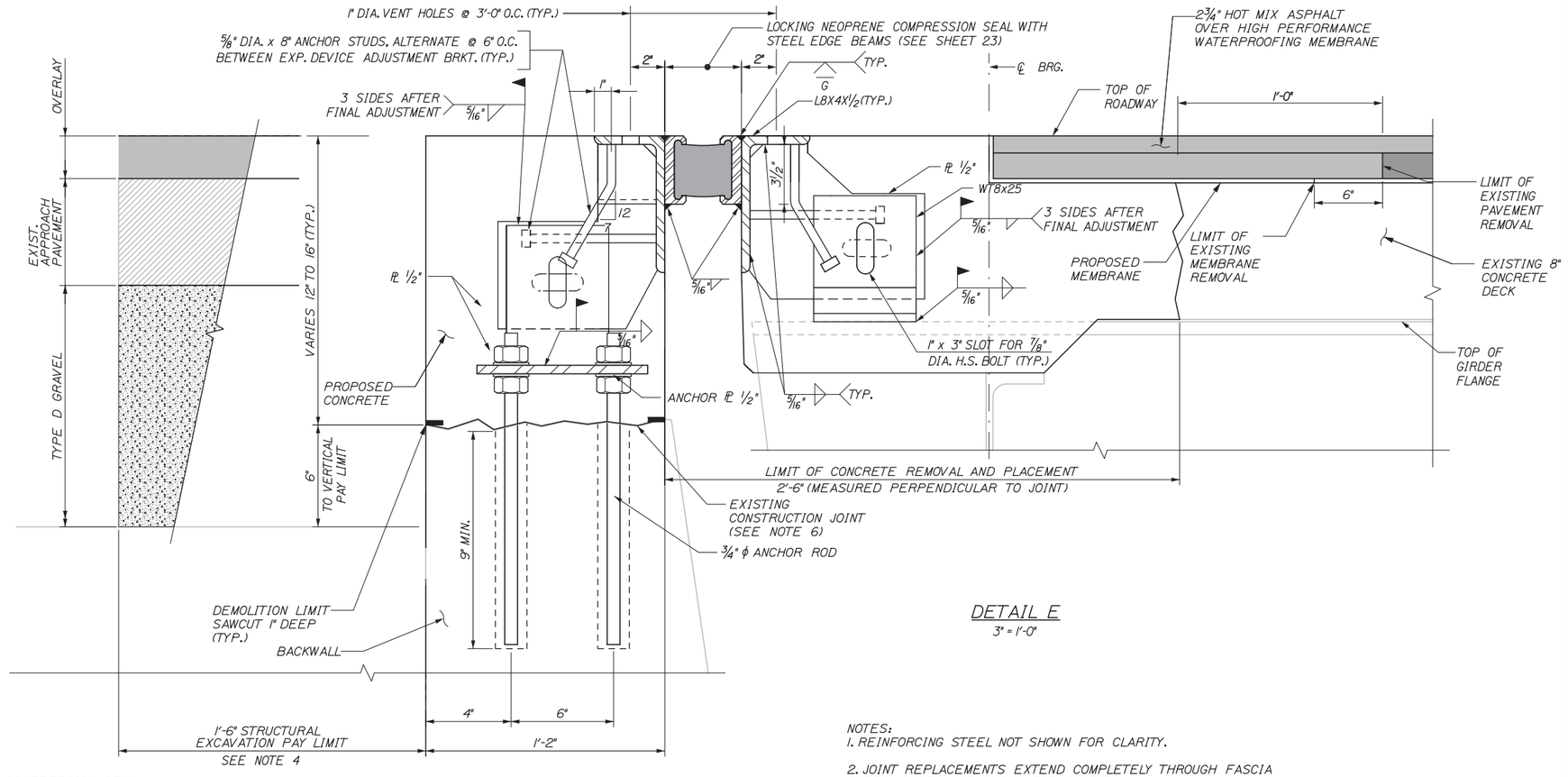

DETAIL E
3" = 1'-0"

NOTES:

1. REINFORCING STEEL NOT SHOWN FOR CLARITY.

2. JOINT REPLACEMENTS EXTEND COMPLETELY THROUGH FASCIA CURBS. CURBS NOT SHOWN FOR CLARITY.

3. PROPOSED JOINTS 1 1/4" HIGHER THAN EXISTING JOINTS (TYP.)

4. BACKFILL STRUCTURAL EXCAVATIONS WITH TYPE D GRAVEL; MATCH EXISTING APPROACH PAVEMENT DEPTH - 10" MAXIMUM.

5. EXISTING GIRDERS HAVE SHEAR STUDS THAT ARE NOT SHOWN AND ARE INTENDED TO REMAIN. ANY SHEAR STUDS REMOVED OR DAMAGED DURING THE CONCRETE DEMOLITION SHALL BE REPLACED IN KIND. PAYMENT SHALL BE INCIDENTAL TO THE CONCRETE DEMOLITION.

6. EXTEND DEMOLITION TO SOUND CONCRETE IF EXISTING CONSTRUCTION JOINT IS NOT SOUND.

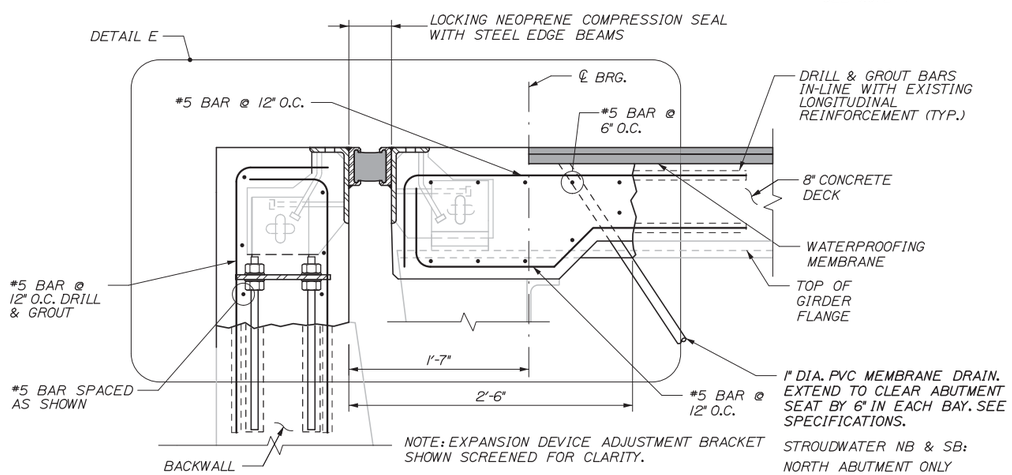

SECTION A-A
1 1/2" = 1'-0"

STROUDWATER NB & SB:
NORTH ABUTMENT ONLY
MAINE CENTRAL RAILROAD NB:
SOUTH ABUTMENT ONLY

Date:12/19/2013

Filename: 022_Joint_Details1.dgn

Scale: AS NOTED			
No.	Revision	By	Date

Designed by: HNTB

CONSULTANT PROJECT MANAGER: Robert J. Driscoll, P.E.

	By	Date		By	Date
Designed	CAH	12/13	Checked	JDW	12/13
Drawn	JRD	12/13	In Charge of	RAL	12/13

HNTB CORPORATION
340 County Road, Suite 6-C
Westbrook, ME 04092
TEL (207) 774-5155
FAX (207) 228-0909

MAINE TURNPIKE

THE GOLD STAR MEMORIAL HIGHWAY

MTA PROJECT MANAGER: Ralph C. Norwood, IV, P.E., P.T.O.E.

BRIDGE REPAIRS - STROUDWATER RIVER & MAINE CENTRAL RAILROAD

JOINT DETAILS I
STROUDWATER NB/MCRR NB

SHEET NUMBER: 22

CONTRACT: 2014.11

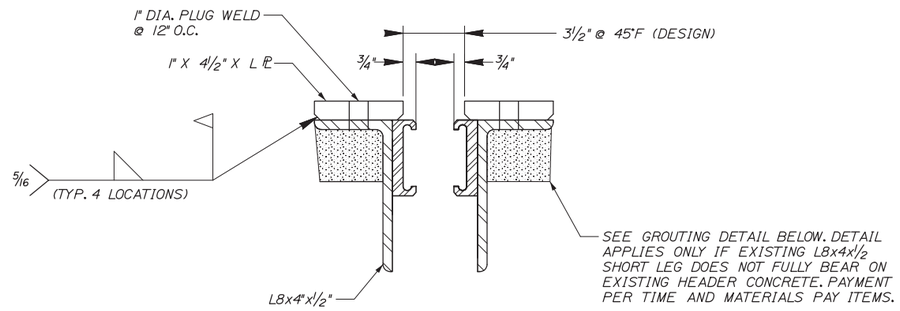

SECTION F-F

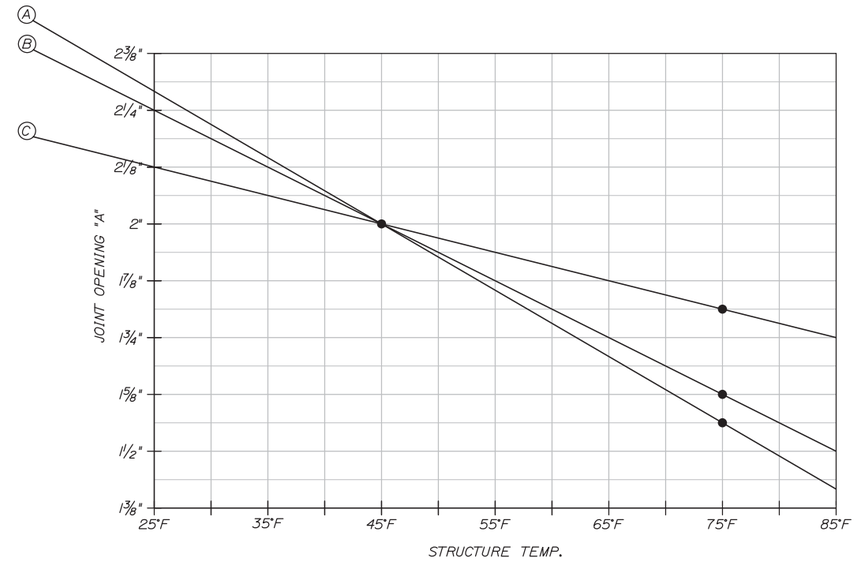

SEAL OPENING TABLE

(A) STROUDWATER NORTH & SOUTH ABUTMENTS

(B) MCRR SOUTH ABUTMENT

(C) MCRR NORTH ABUTMENT

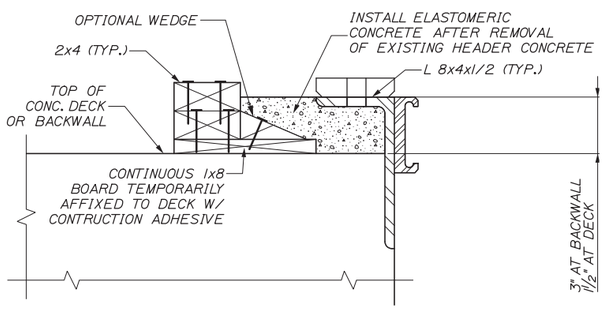

STEP 1

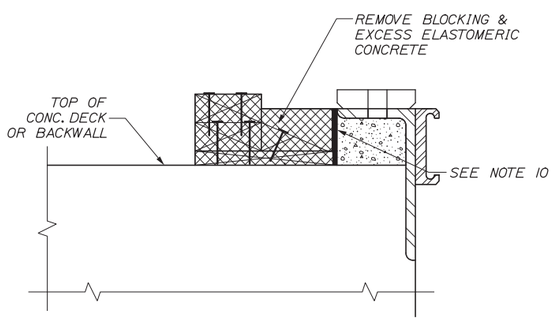

STEP 2

JOINT ARMOR GROUTING DETAIL

N.T.S.

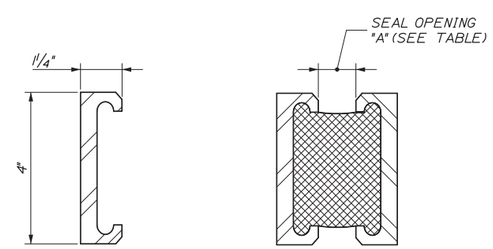

DETAIL - NEOPRENE COMPRESSION SEAL WITH STEEL EDGE BEAMS

N.T.S.

EXPANSION JOINT NOTES

1. SHOP DRAWINGS OF THE EXPANSION DEVICE SHALL BE SUBMITTED FOR APPROVAL BY THE RESIDENT.
2. THE JOINT OPENING AT THE TIME OF INSTALLATION SHALL BE SET BASED ON THE SEAL OPENING TABLE.
3. THE SEAL SHALL BE INSTALLED IN THE FIELD AS ONE CONTINUOUS PIECE AFTER THE JOINT ARMOR INSTALLATION IS COMPLETE.
4. THE CONTRACTOR SHALL APPLY AN EPOXY BONDING AGENT LISTED ON MAINEDOT'S PREQUALIFIED PRODUCT LIST TO ALL STEEL SURFACES OF THE EXPANSION JOINT TO BE EMBEDDED IN CONCRETE.
5. ALL STEEL COMPONENTS SHALL BE AASHTO M270 GRADE 36, UNLESS OTHERWISE NOTED. THE EXPANSION JOINT ASSEMBLY AND ASSOCIATED HARDWARE SHALL BE HOT DIPPED GALVANIZED AFTER FABRICATION. FIELD REPAIR GALVANIZING AFTER FIELD SPLICING.
6. THE NEOPRENE LOCKING COMPRESSION SEALS AND EDGE BEAMS SHALL BE "WABO D SERIES" AS MANUFACTURED BY WATSON BOWMAN ACME.
7. ALL WELDS SHALL BE CONTINUOUS 5/16" FILLETS UNLESS OTHERWISE NOTED.
8. FOLLOWING JOINT INSTALLATION, AND BEFORE THE BRIDGE MEMBRANE IS INSTALLED, THE JOINT ARMOR SHALL BE GROUTED USING ELASTOMERIC CONCRETE AS SHOWN IN THE JOINT ARMOR DETAIL.
9. PAYMENT FOR REINFORCING STEEL, FABRICATED, DELIVERED AND PLACED AS PART OF THE BACKWALL AND DECK SHALL BE CONSIDERED INCIDENTAL TO THE APPROPRIATE SECTION 502 PAY ITEM.
10. FULLY COAT VERTICAL FACE WITH APPROVED MEMBRANE WATERPROOFING MATERIAL BEFORE PAVING.

Scale: AS NOTED

No.	Revision	By	Date

Designed by: HNTB

CONSULTANT PROJECT MANAGER: Robert J. Driscoll, P.E.

	By	Date		By	Date
Designed	CAH	12/13	Checked	JDW	12/13
Drawn	JRD	12/13	In Charge of	RAL	12/13

HNTB CORPORATION
340 County Road, Suite 6-C
Westbrook, ME 04092
TEL (207) 774-5155
FAX (207) 228-0909

MAINE TURNPIKE

THE GOLD STAR MEMORIAL HIGHWAY

MTA PROJECT MANAGER: Ralph C. Norwood, IV, P.E., P.T.O.E.

BRIDGE REPAIRS - STROUDWATER RIVER & MAINE CENTRAL RAILROAD

JOINT DETAILS II

SHEET NUMBER: 23

CONTRACT: 2014.11

Date:12/19/2013
Filename: 023_Joint_Details2.dgn

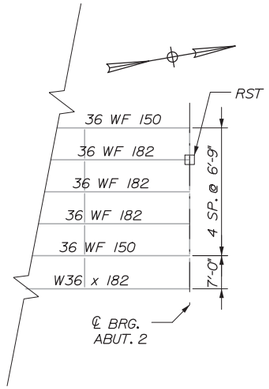

PARTIAL FRAMING PLAN

STROUDWATER RIVER NORTHBOUND

1/16" = 1'-0"

LEGEND:
RST - CLEAN, RECOAT, AND RESET BEARING
RPL - INSTALL CLEANED AND RECOATED REPLACEMENT BEARING

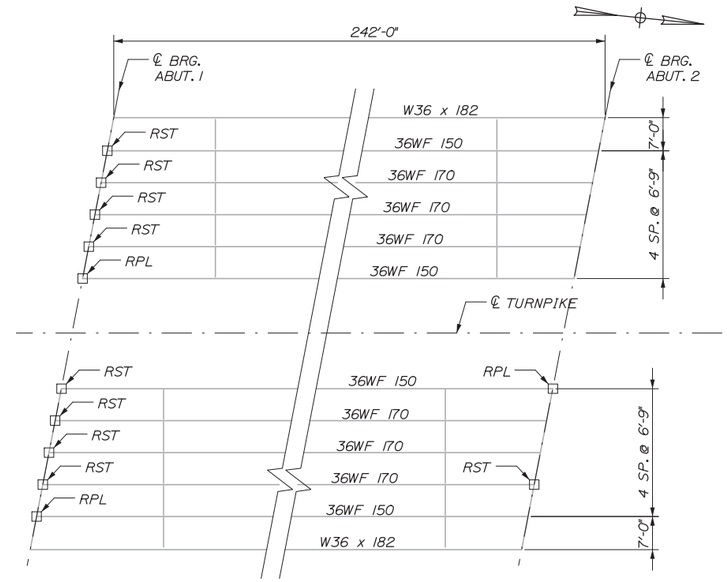

PARTIAL FRAMING PLAN

MAINE CENTRAL RAILROAD
NORTHBOUND AND SOUTHBOUND

1/16" = 1'-0"

LEGEND:
RST - CLEAN, RECOAT, AND RESET BEARING (SEE NOTE 6)
RPL - INSTALL CLEANED AND RECOATED REPLACEMENT BEARING

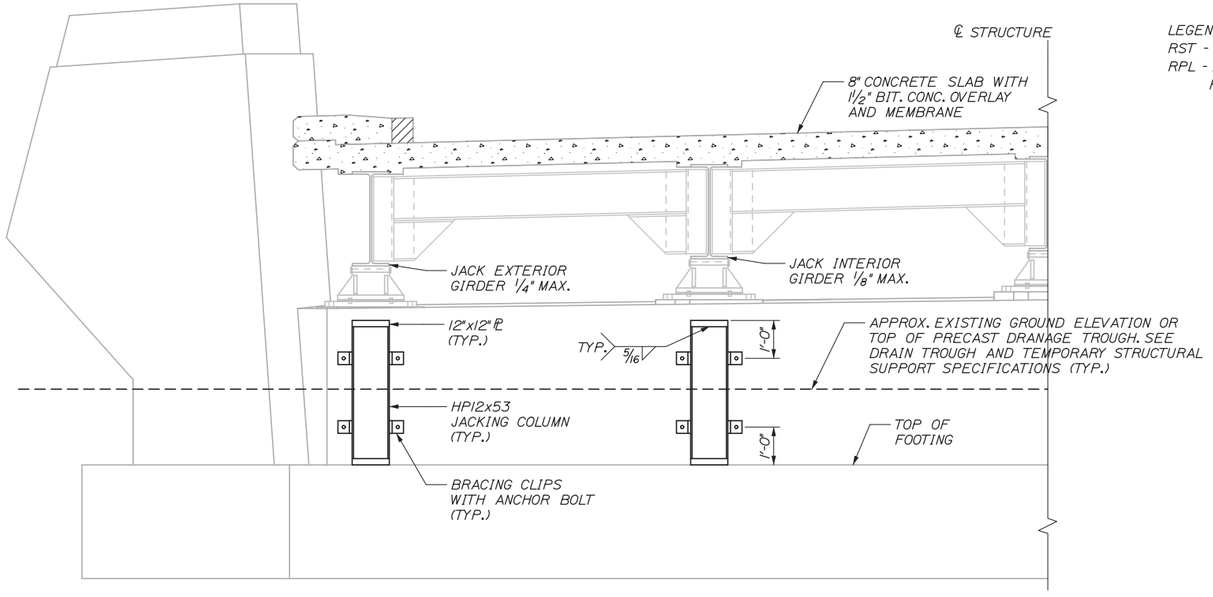

TYPICAL SECTION - JACKING LOCATIONS AT ABUTMENT

N.T.S.

NOTES:

1. THIS WORK INCLUDES REMOVAL AND RESETTING OR REPLACEMENT OF SELECT STEEL ROCKER BEARINGS AT ABUTMENTS AS SHOWN IN THE FRAMING PLANS.

2. ALL EXISTING DIMENSIONS AND INFORMATION SHOWN ON THE PLANS ARE BASED ON AS-BUILT AND STANDARD DETAIL DRAWINGS. THE CONTRACTOR SHALL FIELD VERIFY ALL RELEVANT DIMENSIONS PRIOR TO SUBMISSION OF SHOP DRAWINGS.

3. SEE SHEETS 25 FOR BEARING DETAILS.

4. EXISTING STEEL ROCKER BEARING SOLE PLATES SHALL BE REMOVED BY GRINDING OR MECHANICAL CUTTING METHODS. WELDMENT AND PACK RUST BETWEEN THE EXISTING SOLE PLATE AND INTERFACE OF THE EXISTING STRINGER SHALL BE BY MECHANICAL METHODS ONLY.

5. SEE SPECIFICATIONS FOR BEARING RESET, BEARING REPLACEMENT SCOPES, AND LEAD PAINT REMOVAL REQUIREMENTS.

6. 4 REPLACEMENT BEARINGS ARE SPECIFIED. RESIDENT SHALL DETERMINE LOCATION OF FOURTH REPLACEMENT BEARING AT MCRR.

7. BEARINGS SHALL BE REPLACED OR RESET PRIOR TO INSTALLING ANY PORTIONS OF THE REPLACEMENT BRIDGE JOINTS.

TEMPORARY SUPPORT AND JACKING SYSTEM NOTES:

1. THE TEMPORARY SUPPORT AND JACKING SYSTEM SHALL BE DESIGNED BY THE CONTRACTOR. THE CONTRACTOR SHALL SUBMIT A COMPLETE SET OF DESIGN CALCULATIONS AND DRAWINGS FOR THE TEMPORARY SUPPORT, JACKING SYSTEM, AND BEARING REPLACEMENT PROCEDURE. THE CALCULATIONS AND DRAWINGS SHALL BE STAMPED BY A PROFESSIONAL ENGINEER LICENSED IN MAINE. SEE SPECIAL PROVISION FOR ADDITIONAL REQUIREMENTS.

2. THE TEMPORARY SUPPORT AND JACKING SYSTEM ARRANGEMENTS SHOWN ARE SCHEMATIC AND SUGGESTED ONLY. THE CONTRACTOR'S DESIGN MAY INCLUDE ALTERNATIVE SUPPORT, JACKING LOCATIONS, AND DETAILS.

3. TEMPORARY SUPPORT AND JACKING LOADS SHALL BE BASED ON THE BEARING REACTIONS SHOWN IN THE TABLE.

4. RIGID VERTICAL SUPPORT OF SUPERSTRUCTURE IN THE JACKED POSITION SHALL BE PROVIDED BY LOCKING THE JACK RAMS OR BY FURNISHING AND INSTALLING AN INDEPENDENT SUPPORT SYSTEM. EXCEPT FOR DURING JACKING OPERATIONS, THE SUPERSTRUCTURE SHALL NOT BE HYDRAULICALLY SUPPORTED.

SUGGESTED PROCEDURE FOR TEMPORARY SUPPORT, JACKING,

BEARING REMOVAL AND INSTALLATION AT ABUTMENTS:

1. FIELD MEASURE ALL PROPOSED BEARING LOCATIONS.

2. FURNISH AND INSTALL TEMPORARY SUPPORT AND JACKING SYSTEM. JACK BRIDGE IN ACCORDANCE WITH SPECIAL PROVISION UPWARD TO UNLOAD EXISTING ABUTMENT BEARINGS.

3. SUPPORT SUPERSTRUCTURE IN JACKED POSITION BY LOCKING THE JACK RAMS OR BY FURNISHING AND INSTALLING AN INDEPENDENT TEMPORARY SUPPORT SYSTEM.

4. REMOVE AND DISPOSE EXISTING ROCKER BEARING ASSEMBLIES. TRIM EXISTING ANCHOR RODS FLUSH WITH TOP OF CONCRETE SEAT.

5. FURNISH AND INSTALL PROPOSED BEARINGS. DRILL AND GROUT NEW ANCHOR RODS.

6. JACK (HYDRAULICALLY SUPPORT) BRIDGE AND REMOVE TEMPORARY VERTICAL SUPPORTS (BLOCKING OR RAM LOCKS) IN PREPARATION FOR SUPERSTRUCTURE LOWERING.

7. SLOWLY RELEASE JACKS AND LOWER SUPERSTRUCTURE ONTO NEW BEARINGS. WELD TOP PLATE OF BEARING ASSEMBLY TO BOTTOM FLANGE OF GIRDER.

8. REMOVE TEMPORARY SUPPORT SYSTEM.

UNFACTORED BEARING REACTION TABLE (KIPS)

GIRDER	DEAD LOAD	LIVE LOAD + IMPACT
STROUDWATER RIVER INTERIOR GIRDER ABUTMENT 1&2 (NB & SB)	28.6 K	65.9 K
MCRR EXTERIOR GIRDER ABUTMENT 1&2 (NB & SB)	33.3 K	72.1 K
MCRR INTERIOR GIRDER ABUTMENT 1&2 (NB & SB)	30.9 K	64.4 K

Scale: AS NOTED

No.	Revision	By	Date

Designed by: HNTB

CONSULTANT PROJECT MANAGER: Robert J. Driscoll, P.E.

	By	Date		By	Date
Designed	CAH	12/13	Checked	JDW	12/13
Drawn	JRD	12/13	In Charge of	RAL	12/13

HNTB CORPORATION
340 County Road, Suite 6-C
Westbrook, ME 04092
TEL (207) 774-5155
FAX (207) 228-0909

MAINE TURNPIKE

THE GOLD STAR MEMORIAL HIGHWAY

MTA PROJECT MANAGER: Ralph C. Norwood, IV, P.E., P.T.O.E.

BRIDGE REPAIRS - STROUDWATER RIVER & MAINE CENTRAL RAILROAD

BEARING REPLACEMENT DETAILS I

SHEET NUMBER: 24

CONTRACT: 2014.11

Date:12/19/2013
Filename: 024_Bearing_Replacement_Conduit_Details1.dgn

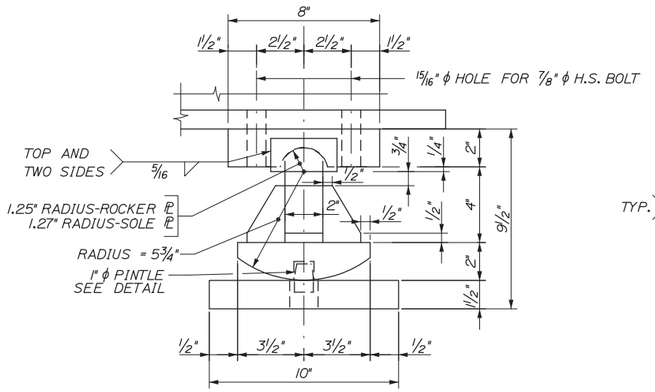

PROPOSED ES-2 EXPANSION BEARINGS

3" = 1'-0"

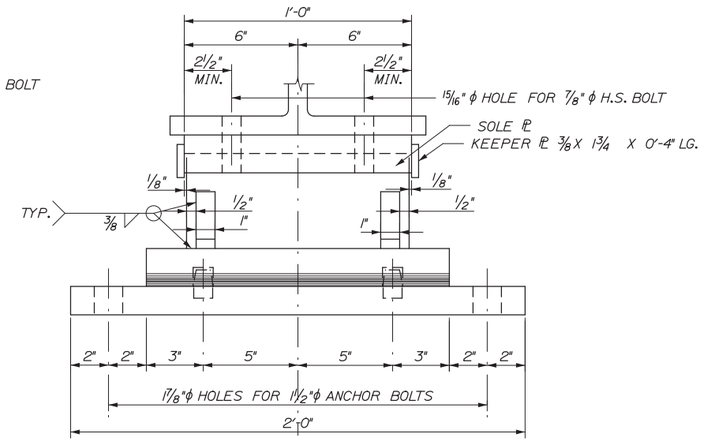

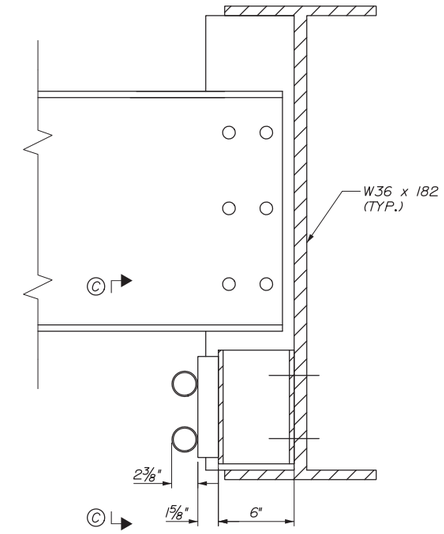

ELEVATION

N.T.S.
STROUDWATER RIVER SOUTHBOUND
WEST FASCIA GIRDER
(LOOKING SOUTH)

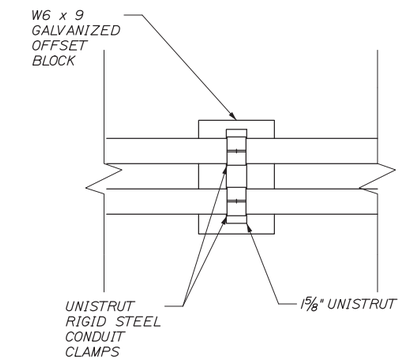

SECTION C-C

N.T.S.

CONDUIT NOTES:

1. INSTALL CONDUIT SUPPPORTS AT MAXIMUM 10'-0" O.C.

2. USE ½" DIA. A-325 BOLTS TO ATTACH OFFSET BLOCKS TO BEAM WEB - 2 PER BLOCK.

3. ALL COMPONENTS AND FASTENERS SHALL BE HOT DIP GALVANIZED.

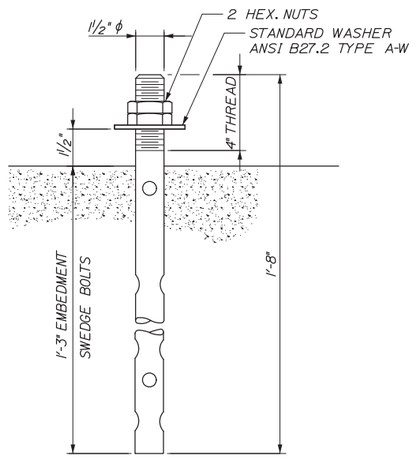

NOTES:
TWO REQUIRED FOR EACH EXPANSION PEDESTAL.
ANCHOR BOLTS TO BE SUPPLIED BY THE CONTRACTOR.

ANCHOR BOLT DETAIL

3" = 1'-0"

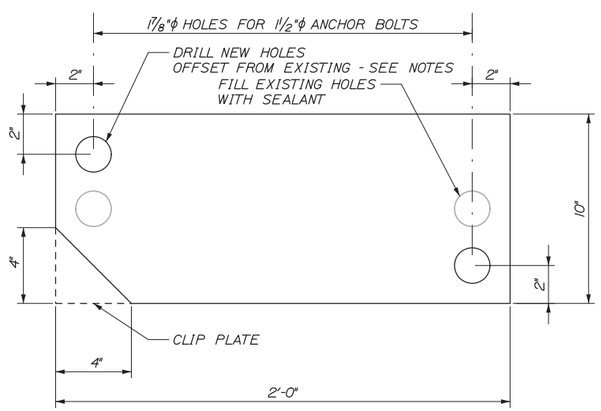

MASONRY PLATE

3" = 1'-0"

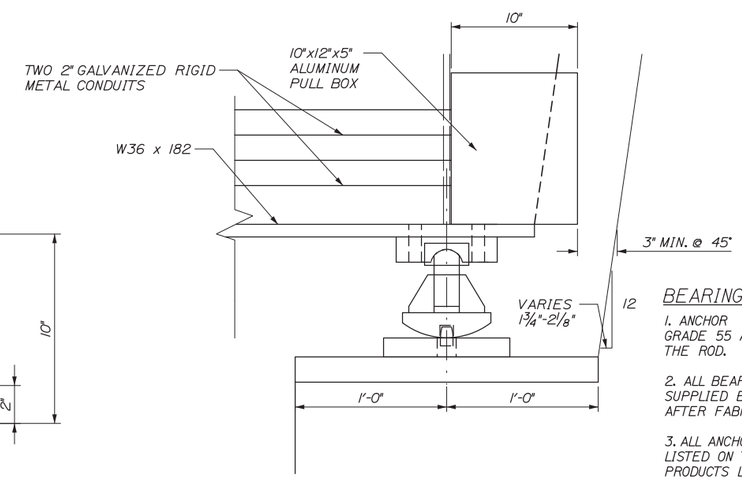

CONDUIT TERMINATION AT ABUTMENT

N.T.S.
NORTH ABUTMENT SHOWN
SOUTH ABUTMENT OPPOSITE HAND

BEARING NOTES:

1. ANCHOR RODS SHALL MEET THE REQUIREMENTS OF ASTM F 1554, GRADE 55 AND SHALL BE SWEDGED ON THE EMBEDDED PORTION OF THE ROD.

2. ALL BEARING REPLACEMENT ASSEMBLIES AND ANCHOR BOLTS TO BE SUPPLIED BY THE CONTRACTOR. HOT DIP GALVANIZE ALL COMPONENTS AFTER FABRICATION.

3. ALL ANCHOR RODS SHALL BE GROUTED IN PLACE USING A MATERIAL LISTED ON THE MAINE DEPARTMENT OF TRANSPORTATION QUALIFIED PRODUCTS LIST OF CONCRETE ADHESIVE ANCHOR SYSTEMS. CEMETITIOUS ANCHORING MATERIALS ARE NOT PERMITTED. THE SELECTED ANCHORING MATERIAL SHALL BE CAPABLE OF DEVELOPING AN ULTIMATE SHEAR RESISTANCE OF 70 KIPS.

4. FIELD LOCATE EXISTING RESTEEL BEFORE ORDERING AND CORING NEW MASONRY PLATE HOLES. ADVISE RESIDENT OF CONFLICTS.

5. UPSET THE THREADS ON THE ANCHOR RODS AFTER ASSEMBLY.

6. SEE SPECIFICATIONS FOR REHABILITATION REQUIREMENTS FOR EXISTING BEARINGS BEING RESET.

Scale: AS NOTED

No.	Revision	By	Date

Designed by: HNTB

CONSULTANT PROJECT MANAGER: Robert J. Driscoll, P.E.

	By	Date		By	Date
Designed	CAH	12/13	Checked	JDW	12/13
Drawn	JRD	12/13	In Charge of	RAL	12/13

HNTB CORPORATION
340 County Road, Suite 6-C
Westbrook, ME 04092
TEL (207) 774-5155
FAX (207) 228-0909

MAINE TURNPIKE

THE GOLD STAR MEMORIAL HIGHWAY

MTA PROJECT MANAGER: Ralph C. Norwood, IV, P.E., P.T.O.E.

BRIDGE REPAIRS - STROUDWATER RIVER & MAINE CENTRAL RAILROAD

BEARING REPLACEMENT DETAILS II AND CONDUIT DETAILS

SHEET NUMBER: 25

CONTRACT: 2014.11

Date:12/19/2013
Filename: 025_Bearing_Replacement_Conduit_Details2.dgn

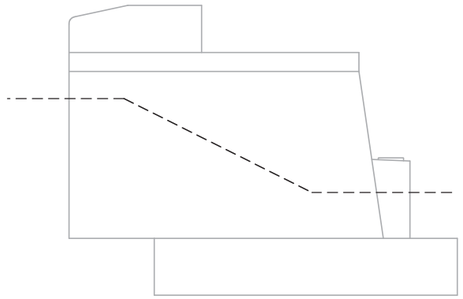

SE WINGWALL

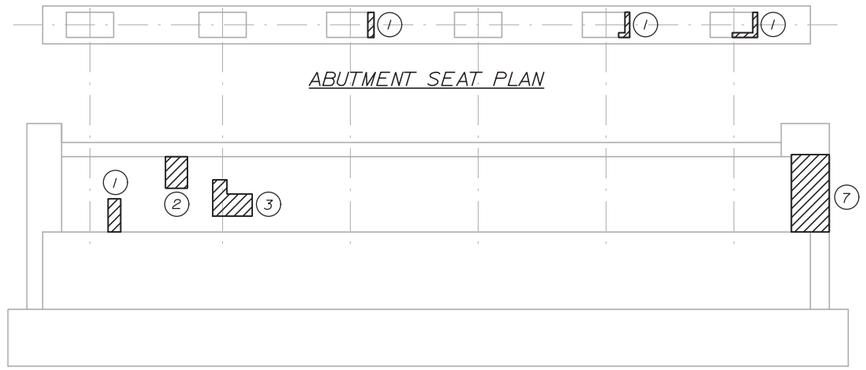

ABUTMENT SEAT PLAN

SOUTH ABUTMENT ELEVATION

1/4" = 1'-0"

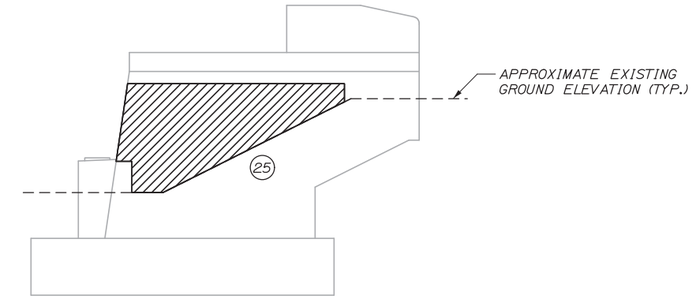

SW WINGWALL

ESTIMATED REPAIR QUANTITIES:

SOUTH ABUTMENT SURFACE CONCRETE REPAIR: 41 SF
NORTH ABUTMENT SURFACE CONCRETE REPAIR: 104 SF

LEGEND:

CONCRETE REPAIR LIMITS

(#) ESTIMATED SQUARE FOOT AREA OF REPAIR

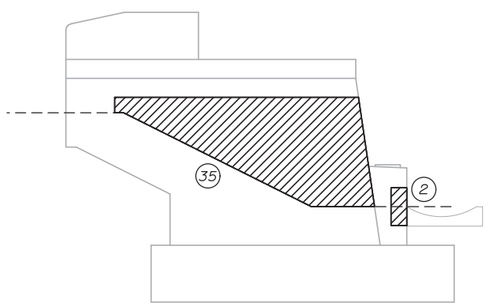

NW WINGWALL

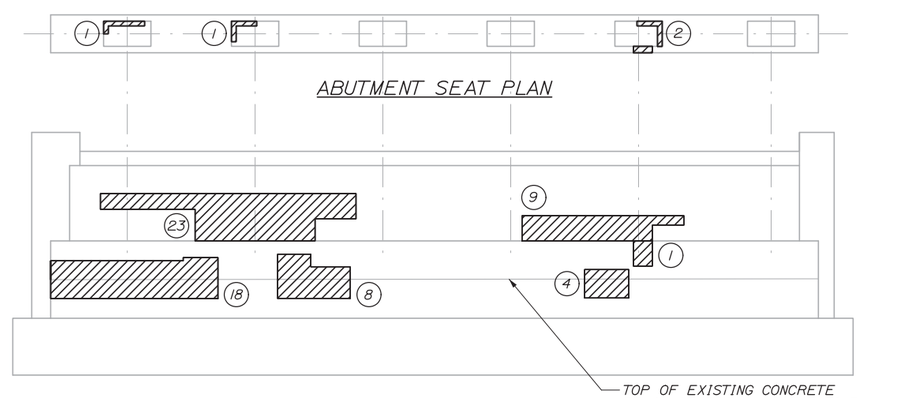

ABUTMENT SEAT PLAN

TOP OF EXISTING CONCRETE DRAINAGE TROUGH - SELECTIVELY REMOVE TO COMPLETE CONCRETE REPAIRS; IF REQUIRED THEN RESET

NORTH ABUTMENT ELEVATION

1/4" = 1'-0"

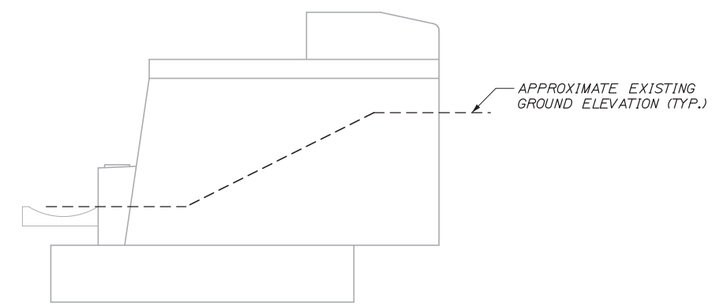

NE WINGWALL

Date:12/19/2013

Filename: 026_Stroudwater_Northbound_Substructure_Repair.dgn

Scale: AS NOTED			
No.	Revision	By	Date

Designed by: HNTB

CONSULTANT PROJECT MANAGER: Robert J. Driscoll, P.E.

	By	Date		By	Date
Designed	CAH	12/13	Checked	TMH	12/13
Drawn	JRD	12/13	In Charge of	RAL	12/13

HNTB CORPORATION
340 County Road, Suite 6-C
Westbrook, ME 04092
TEL (207) 774-5155
FAX (207) 228-0909

MAINE TURNPIKE

THE GOLD STAR MEMORIAL HIGHWAY

MTA PROJECT MANAGER: Ralph C. Norwood, IV, P.E., P.T.O.E.

BRIDGE REPAIRS - STROUDWATER RIVER & MAINE CENTRAL RAILROAD

STROUDWATER RIVER NORTHBOUND SUBSTRUCTURE REPAIRS

SHEET NUMBER: 26

CONTRACT: 2014.11

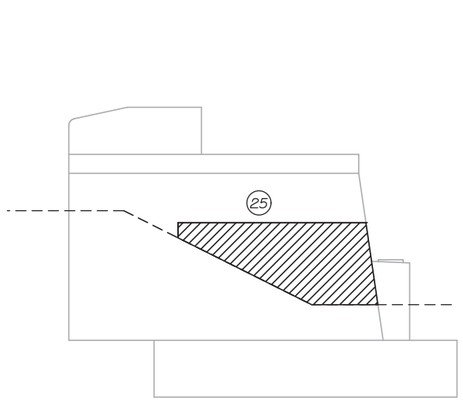

SE WINGWALL

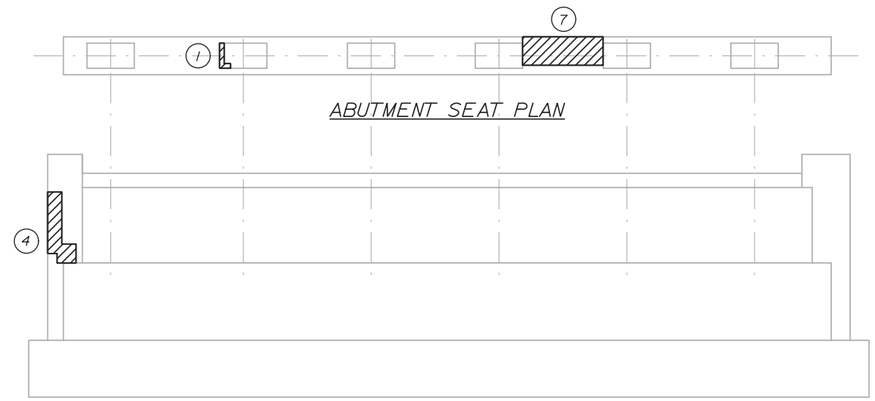

ABUTMENT SEAT PLAN

SOUTH ABUTMENT ELEVATION

1/4" = 1'-0"

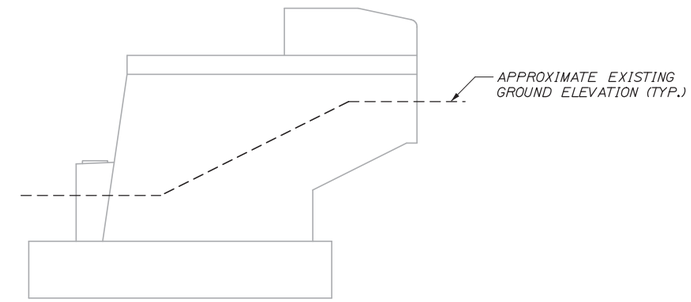

SW WINGWALL

ESTIMATED REPAIR QUANTITIES:

SOUTH ABUTMENT SURFACE CONCRETE REPAIR: 37 SF
NORTH ABUTMENT SURFACE CONCRETE REPAIR: 34 SF

LEGEND:

CONCRETE REPAIR LIMITS

(#) ESTIMATED SQUARE FOOT AREA OF REPAIR

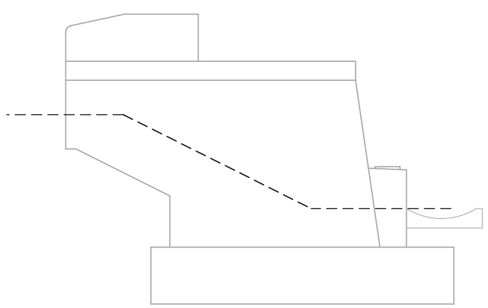

NW WINGWALL

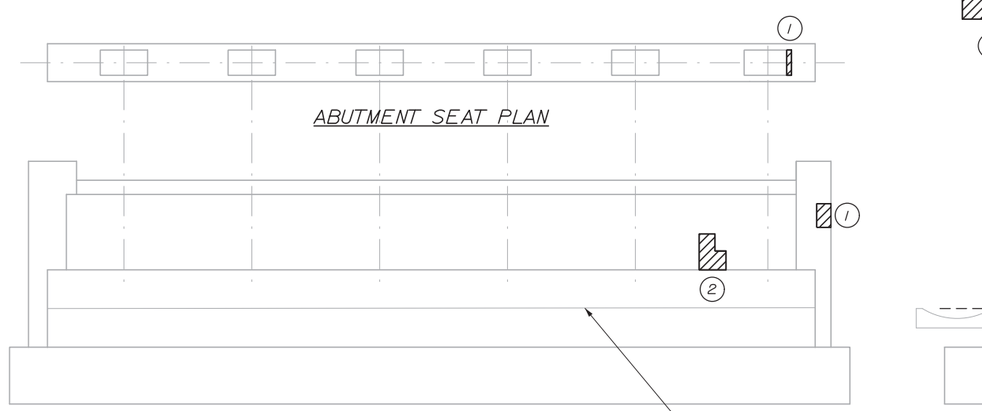

ABUTMENT SEAT PLAN

TOP OF EXISTING CONCRETE DRAINAGE TROUGH - SELECTIVELY REMOVE TO COMPLETE CONCRETE REPAIRS; IF REQUIRED THEN RESET

NORTH ABUTMENT ELEVATION

1/4" = 1'-0"

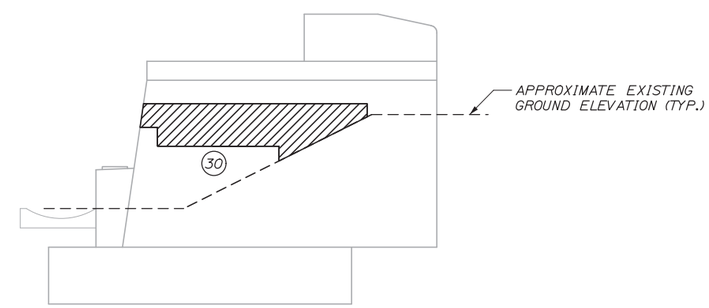

NE WINGWALL

Date:12/19/2013

Filename: 027_Stroudwater_Southbound_Substructure_Repair.dgn

Scale: AS NOTED			
No.	Revision	By	Date

Designed by: HNTB

CONSULTANT PROJECT MANAGER: Robert J. Driscoll, P.E.

	By	Date		By	Date
Designed	CAH	12/13	Checked	TMH	12/13
Drawn	JRD	12/13	In Charge of	RAL	12/13

HNTB CORPORATION
340 County Road, Suite 6-C
Westbrook, ME 04092
TEL (207) 774-5155
FAX (207) 228-0909

MAINE TURNPIKE

THE GOLD STAR MEMORIAL HIGHWAY

MTA PROJECT MANAGER: Ralph C. Norwood, IV, P.E., P.T.O.E.

BRIDGE REPAIRS - STROUDWATER RIVER & MAINE CENTRAL RAILROAD

STROUDWATER RIVER SOUTHBOUND SUBSTRUCTURE REPAIRS

SHEET NUMBER: 27

CONTRACT: 2014.11

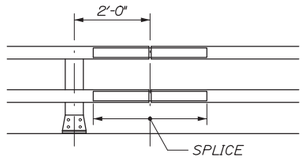

RAILING - ELEVATION
(TWO BAR RAILING SHOWN. THREE BAR RAILING SIMILAR)
1/2" = 1'-0"

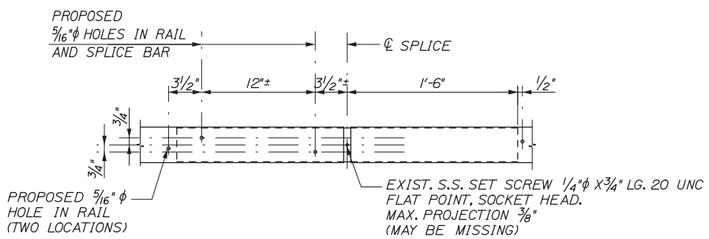

SPLICE MODIFICATION DETAIL
(ELEVATION VIEW FROM BACK SIDE OF RAIL)
1 1/2" = 1'-0"

NOTE:
RE-CENTER EXISTING SPLICE BAR AND DRILL TWO 5/16" ϕ HOLES AND INSTALL TWO 3/8" ϕ X 1", TYPE F, HEX. WASHER HEAD TAPPING SCREWS (STAINLESS). DRILL TWO ADDITIONAL 5/16" ϕ HOLES IN RAIL FOR SPLICE LOCATION VERIFICATION.

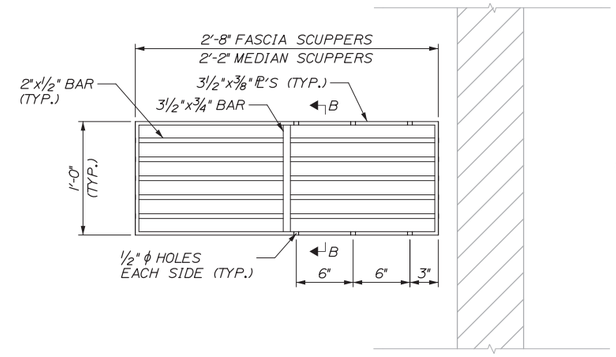

PROPOSED PLAN
N.T.S.

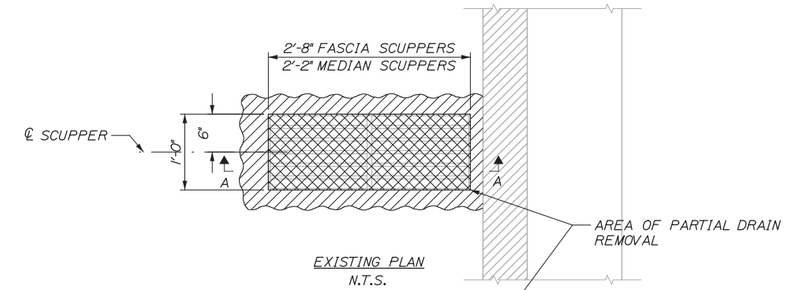

EXISTING PLAN
N.T.S.

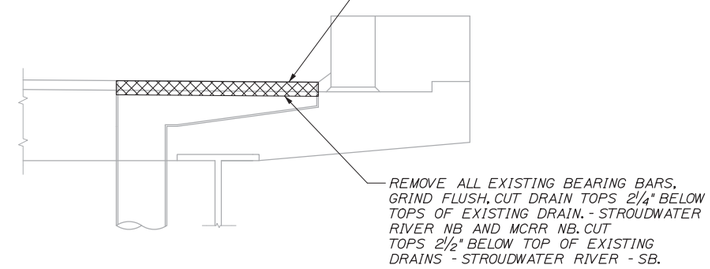

EXISTING SECTION A-A
N.T.S.
FASCIA SCUPPER SHOWN
MEDIAN SCUPPER SIMILAR

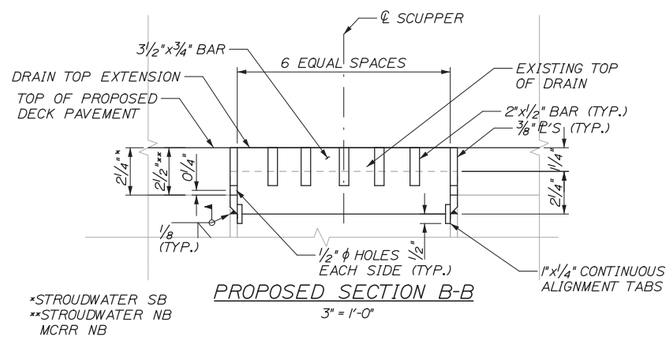

PROPOSED SECTION B-B
3" = 1'-0"

BRIDGE DRAIN GRATE MODIFICATION NOTES:

1. Prior to starting the work the Contractor shall field measure each drain. This information shall be used for the fabrication of the drain grate extensions.

2. Contractor shall cleanly cut and remove the top of existing drains 2 1/4" below existing top of drain. The deck concrete around the full perimeter of the drain shall be mechanically removed to a minimum depth of 1 1/2" by a minimum width of 3".

3. All plates shall conform to ASTM A 36. Drain grate extensions shall be hot dip galvanized after fabrication.

4. Alignment tabs are optional. Affix and galvanize with drain grate extensions, if used.

5. Prepare existing drain body and new drain top grate extension for field weld. Field weld the exterior perimeter joint between existing drain body and new top of drain. After welding, the interior and exterior of the new top of drain shall be coated with an approved cold galvanizing compound.

6. Areas of concrete removal shall be patched using a shallow concrete patching material selected from the MTA approved products list. Concrete patch shall be placed, finished and cured in accordance with the manufacturers specifications.

7. Payment for all labor, equipment and materials associated with the bridge drain modification will be paid for under Item 502.701, Bridge Drain Grate Modification. See Special Provision 502.

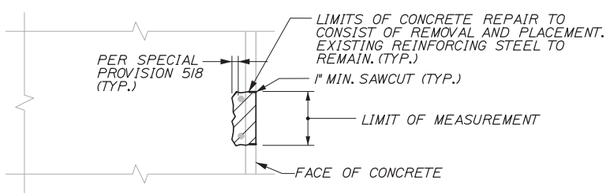

CONCRETE SURFACE REPAIR DETAIL
N.T.S.

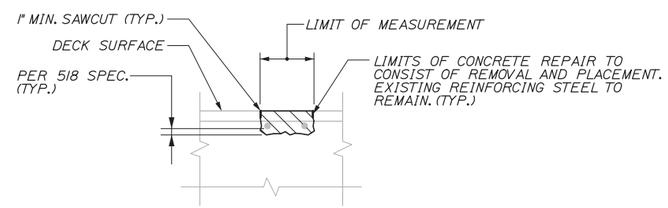

PARTIAL DEPTH CONCRETE DECK REPAIR DETAIL
1" = 1'-0"

Date:12/19/2013

Filename: 028_Misc_Bridge_Details.dgn

Scale: AS NOTED			
No.	Revision	By	Date

Designed by: HNTB

CONSULTANT PROJECT MANAGER: Robert J. Driscoll, P.E.

	By	Date		By	Date
Designed	CAH	12/13	Checked	JDW	12/13
Drawn	JRD	12/13	In Charge of	RAL	12/13

HNTB CORPORATION
340 County Road, Suite 6-C
Westbrook, ME 04092
TEL (207) 774-5155
FAX (207) 228-0909

MAINE TURNPIKE

THE GOLD STAR MEMORIAL HIGHWAY

MTA PROJECT MANAGER: Ralph C. Norwood, IV, P.E., P.T.O.E.

BRIDGE REPAIRS - STROUDWATER RIVER & MAINE CENTRAL RAILROAD

MISCELLANEOUS BRIDGE DETAILS

SHEET NUMBER: 28

CONTRACT: 2014.11

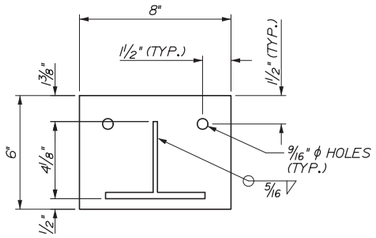

WT4x9 DETAIL
3" = 1'-0"

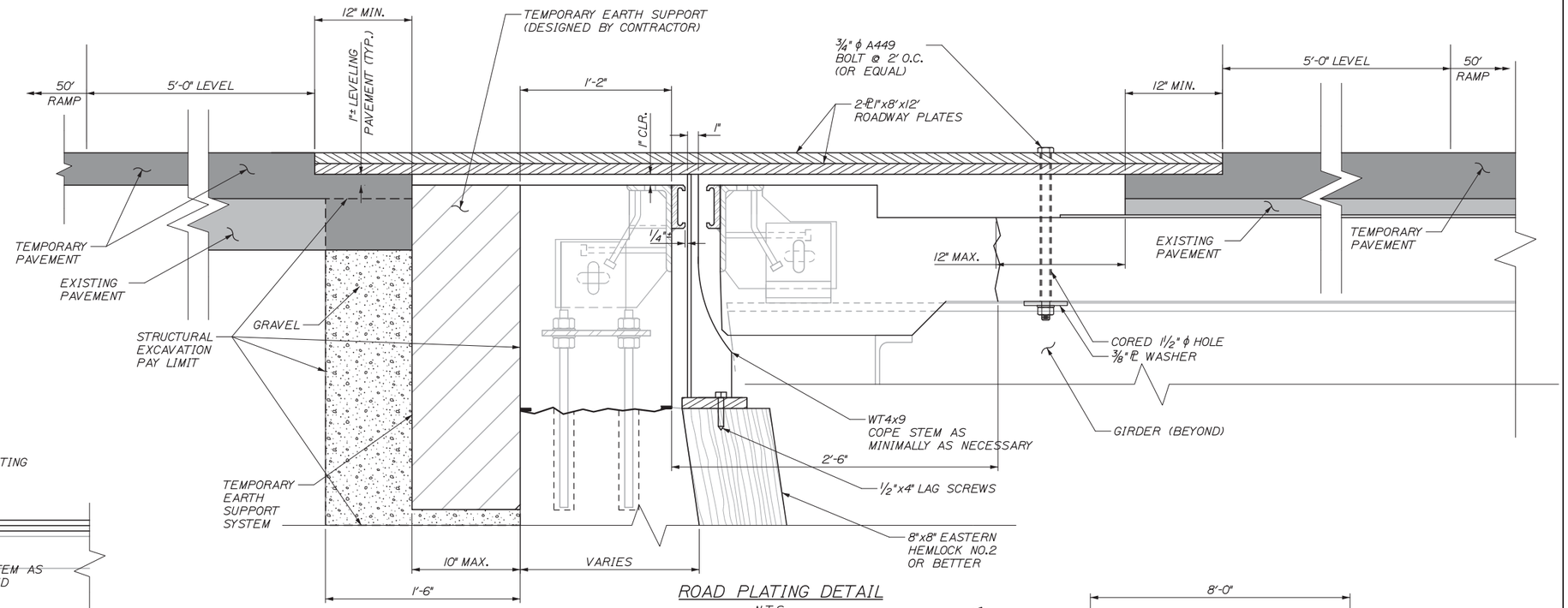

ROAD PLATING DETAIL
N.T.S.

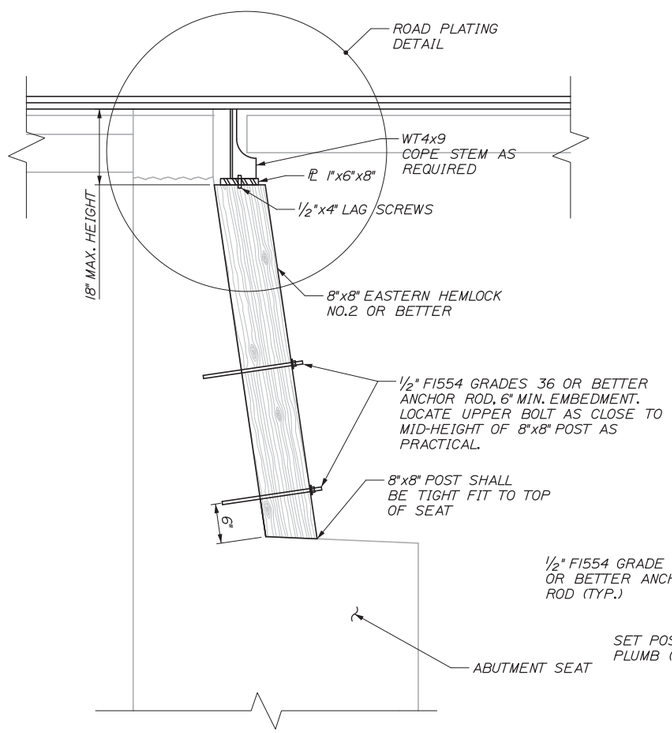

PLATING SUPPORT SECTION
1" = 1'-0"

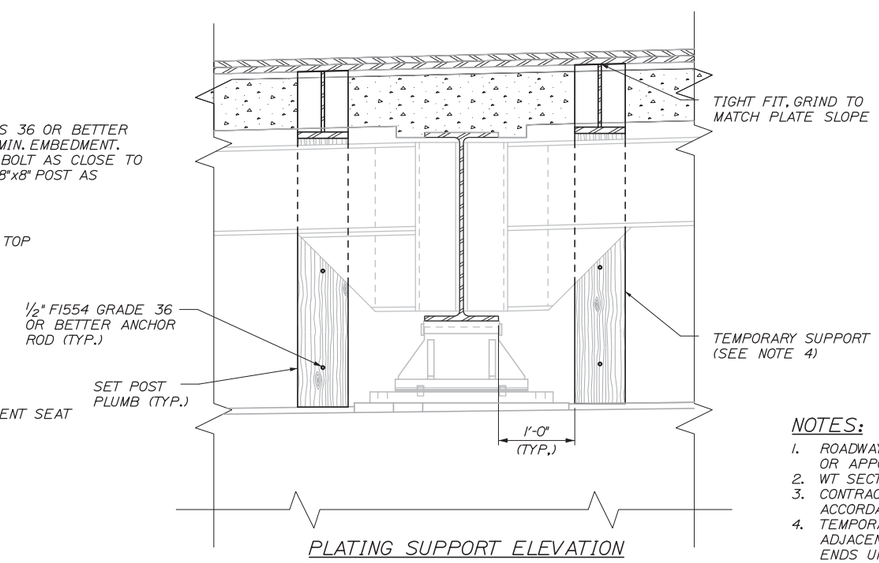

PLATING SUPPORT ELEVATION
1" = 1'-0"

USE A MINIMUM OF (5) 12" WELDS ALONG EACH SEAM. BEVEL THE PLATE ⅜" TO ALLOW FOR A 5/16" WELD. WELD LOCATIONS AS SHOWN. TYPICAL EACH PLATE CONNECTION. GRIND WELDS SMOOTH BARS BEFORE ALLOWING TRAFFIC ON PLATE. STAGGER JOINTS FROM ONE LAYER TO THE NEXT.

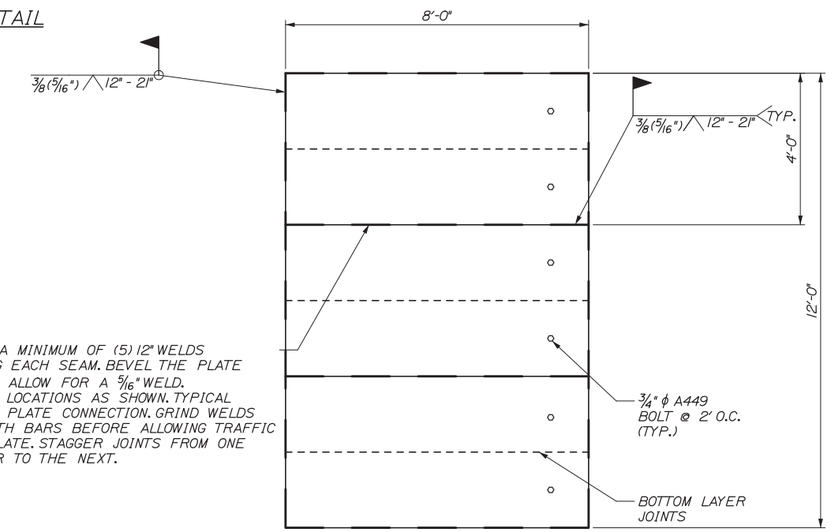

ROAD PLATE PLAN
½" = 1'-0"

NOTES:

1. ROADWAY PLATES SHALL BE ASTM A572 GRADE 50 OR APPOVED EQUAL.
2. WT SECTIONS SHALL BE ASTM A36 OR BETTER.
3. CONTRACTOR MAY PROPOSE ALTERNATE DESIGNS IN ACCORDANCE WITH SPECIAL PROVISION 510.
4. TEMPORARY SUPPORTS SHALL BE PROVIDED ADJACENT TO GIRDERS AS SHOWN AND AT PLATE ENDS UNLESS END OF PLATE IS 1 FT OR LESS FROM SUPPORT ADJACENT TO GIRDER.

Date:12/19/2013

Filename: 029_Plating_Plan_Details1.dgn

Scale: AS NOTED

No.	Revision	By	Date

Designed by: HNTB

CONSULTANT PROJECT MANAGER: Robert J. Driscoll, P.E.

	By	Date		By	Date
Designed	JDW	12/13	Checked	CAH	12/13
Drawn	JRD	12/13	In Charge of	RAL	12/13

HNTB CORPORATION
340 County Road, Suite 6-C
Westbrook, ME 04092
TEL (207) 774-5155
FAX (207) 228-0909

MAINE TURNPIKE

THE GOLD STAR MEMORIAL HIGHWAY

MTA PROJECT MANAGER: Ralph C. Norwood, IV, P.E., P.T.O.E.

BRIDGE REPAIRS - STROUDWATER RIVER & MAINE CENTRAL RAILROAD

STEEL PLATING PLAN AND DETAILS I

SHEET NUMBER: 29

CONTRACT: 2014.11

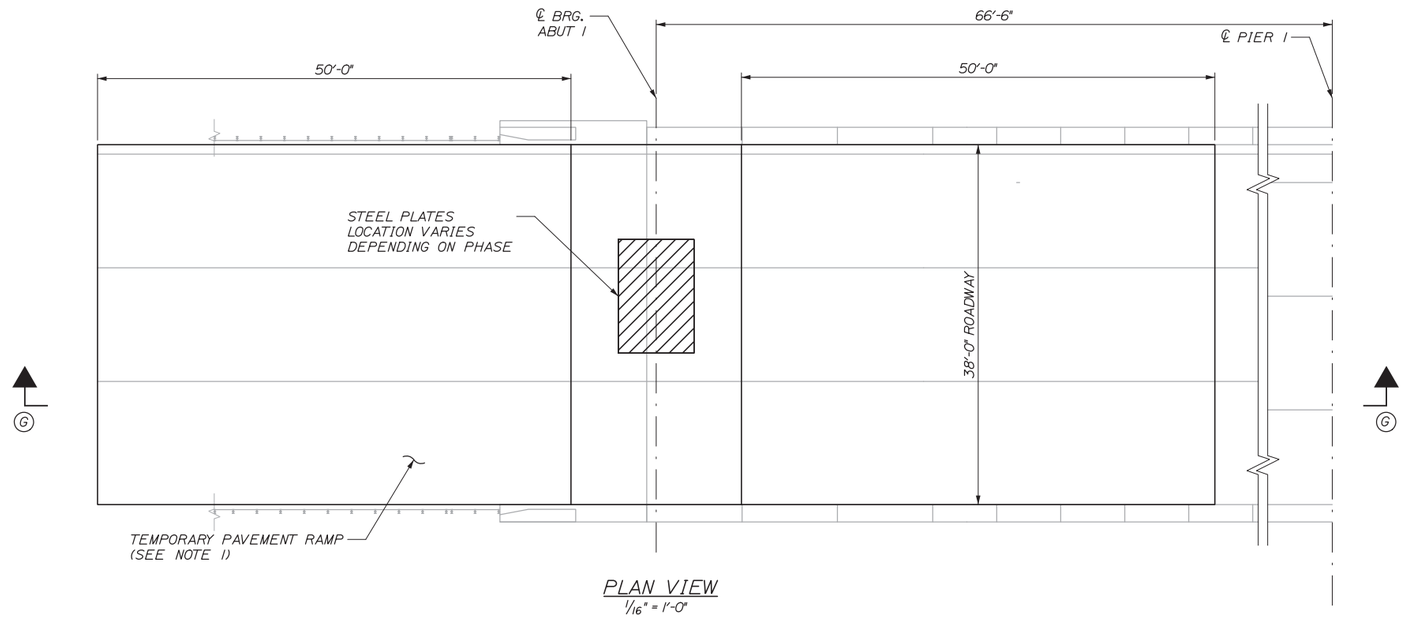

PLAN VIEW
1/16" = 1'-0"

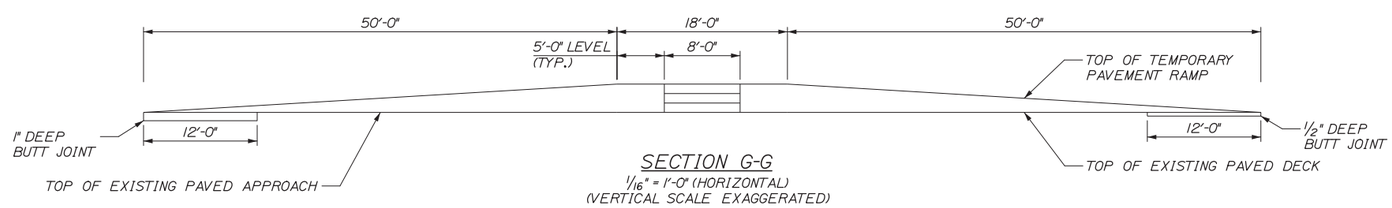

SECTION G-G
1/16" = 1'-0" (HORIZONTAL)
(VERTICAL SCALE EXAGGERATED)

NOTES:
1. BUTT JOINTS AND TEMPORARY PAVEMENT RAMPS WILL NOT BE PAID SEPARATELY BUT ARE INCIDENTAL TO THE LUMP SUM TEMPORARY STEEL PLATE SPECIAL DETOUR PAY ITEM.

Date:12/19/2013

Filename: 030_Plating_Plan_Details2.dgn

Scale: AS NOTED			
No.	Revision	By	Date

Designed by: HNTB

CONSULTANT PROJECT MANAGER: Robert J. Driscoll, P.E.

	By	Date		By	Date
Designed	CAH	12/13	Checked	JDW	12/13
Drawn	JRD	12/13	In Charge of	RAL	12/13

HNTB CORPORATION
340 County Road, Suite 6-C
Westbrook, ME 04092
TEL (207) 774-5155
FAX (207) 228-0909

MAINE TURNPIKE

THE GOLD STAR MEMORIAL HIGHWAY

MTA PROJECT MANAGER: Ralph C. Norwood, IV, P.E., P.T.O.E.

BRIDGE REPAIRS - STROUDWATER RIVER & MAINE CENTRAL RAILROAD

STEEL PLATING PLAN AND DETAILS II

SHEET NUMBER: 30

CONTRACT: 2014.11

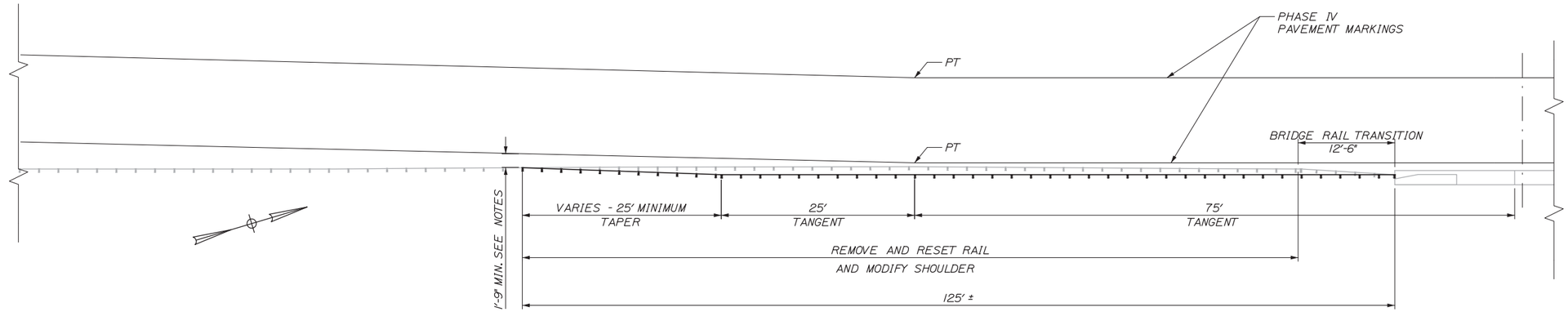

PLAN VIEW

STROUDWATER APPROACH SHOWN
MCRR NB APPROACH SIMILAR

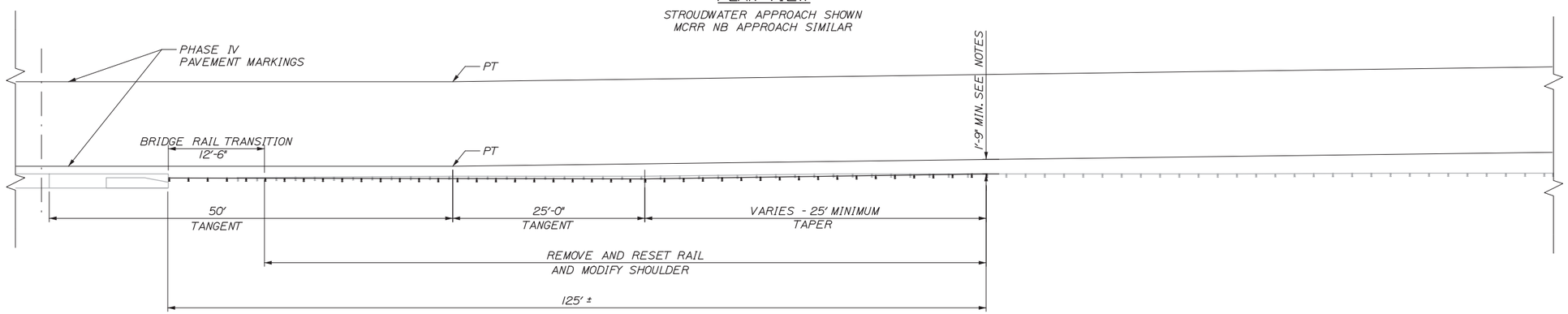

PLAN VIEW

STROUDWATER DEPARTURE SHOWN
MCRR NB DEPARTURE SIMILAR

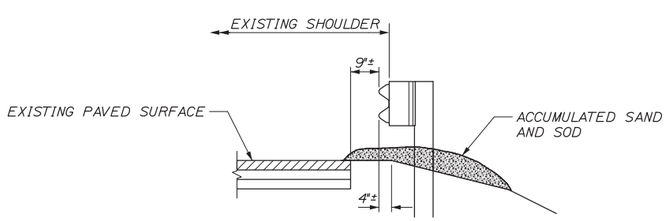

EXISTING RIGHT SHOULDER

N.T.S.

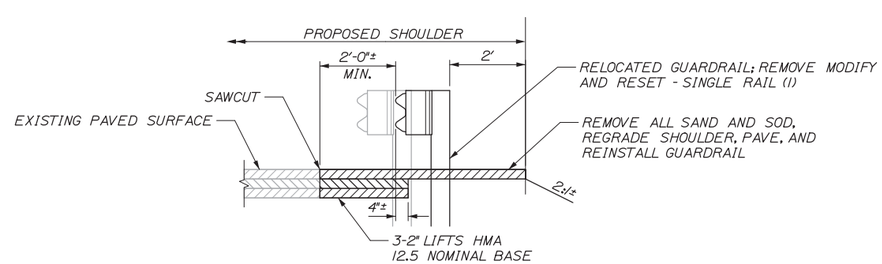

PROPOSED RIGHT SHOULDER

N.T.S.

NOTES:

1. THE ACTUAL LIMITS OF THE GUARDRAIL RESET AND SHOULDER MODIFICATIONS SHALL BE DETERMINED IN THE FIELD BY THE RESIDENT. THIS WORK SHALL BE COMPLETED IN PHASE I WHILE TRAFFIC IS SHIFTED TOWARDS THE MEDIAN.

2. THE GUARDRAIL SHALL BE TANGENT TO THE BRIDGE CURB WHERE THE CONCRETE BARRIER IS PARALLEL TO AND 24 FEET OFF OF RIGHT SHOULDER BRIDGE CURB. THE 12.5 5/32 BRIDGE TRANSITION RAIL SHALL NOT BE REMOVED, MODIFIED AND RESET. MATERIAL REMOVAL, GRADING AND PAVEMENT SHALL BE UNDERTAKEN WITH THE BRIDGE TRANSITION RAIL IN PLACE.

3. THE RESIDENT SHALL LAYOUT THE TEMPORARY PHASE IV LINE WORK AND MARK WHERE THE FUTURE TEMPORARY LINE IS ONE FOOT INSIDE THE EDGE OF PAVEMENT, TYPICALLY 15/32-9 15/32 OFF THE FACE OF GUARDRAIL, ON BOTH ENDS OF THE BRIDGE. THIS IS THE LIMIT OF THE SHOULDER MODIFICATIONS (REMOVE RAIL, REMOVE EXCESS MATERIAL AND PAVEMENT; REGRADE SHOULDER, REPAVE SHOULDER, AND MODIFY AND RESET EXISTING RAIL). BEYOND THIS LIMIT THE EXISTING GUARDRAIL IS TO BE REMOVED, MODIFIED AND RESET TO TRANSITION BACK TO THE EXISTING GUARDRAIL RUN.

4. INSTALL TEMPORARY BERMS AND DOWNSPOUTS, AS REQUIRED, TO CONTROL ROADWAY DRAINAGE AND PREVENT WASHOUTS OF THE DISTURBED SHOULDER.

5. SEE LIMIT OF DISTURBANCE PLANS FOR INSTALLATION OF SILT FENCE.

6. REMOVAL OF ACCUMULATED SAND, SOD AND EXISTING PAVEMENT SHALL BE MEASURED AND PAID UNDER ITE 203.20 COMMON EXCAVATION.

Scale: AS NOTED

No.	Revision	By	Date

Designed by: HNTB

CONSULTANT PROJECT MANAGER: Robert J. Driscoll, P.E.

	By	Date		By	Date
Designed	CAH	12/13	Checked	TMH	12/13
Drawn	JRD	12/13	In Charge of	RAL	12/13

HNTB CORPORATION
340 County Road, Suite 6-C
Westbrook, ME 04092
TEL (207) 774-5155
FAX (207) 228-0909

MAINE TURNPIKE

THE GOLD STAR MEMORIAL HIGHWAY

MTA PROJECT MANAGER: Ralph C. Norwood, IV, P.E., P.T.O.E.

BRIDGE REPAIRS - STROUDWATER RIVER & MAINE CENTRAL RAILROAD

GUARDRAIL AND SHOULDER MODIFICATIONS

SHEET NUMBER: 31

CONTRACT: 2014.11

Date:12/19/2013

Filename: 031_Guardrail_Shoulder_Mods.dgn

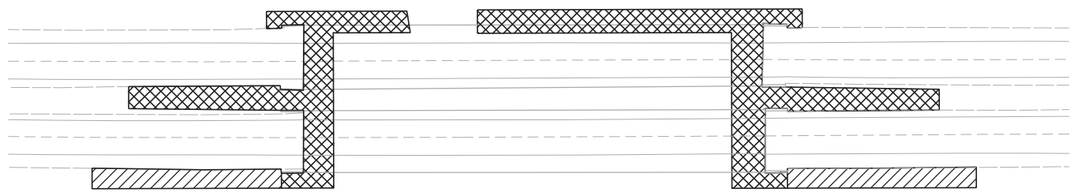

STROUDWATER RIVER BRIDGES

1" = 100'

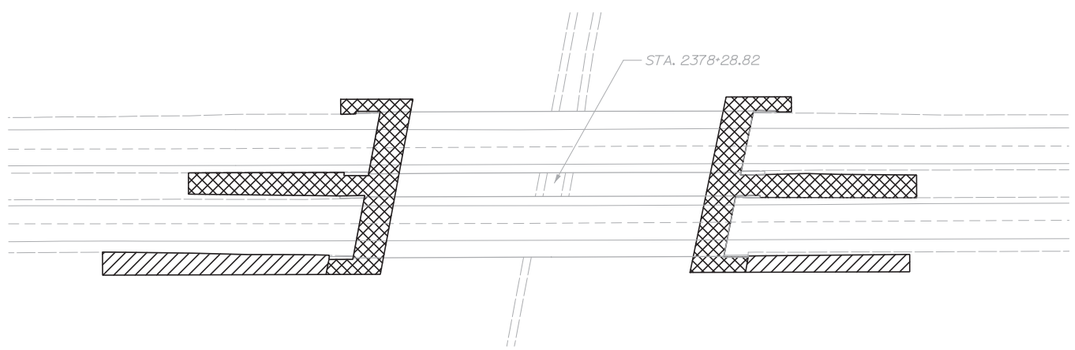

MCRR BRIDGES

1" = 100'

NOTES:

1. EROSION AND SEDIMENTATION CONTROL DEVICES REQUIRED FOR THE CONTRACTOR'S ACCESS TO LOCATIONS AND STORAGE AREAS WILL NOT BE MEASURED FOR PAYMENT.

2. SEE SPECIFICATIONS FOR CONTRACTOR'S SUBMITTAL REQUIREMENTS IF ADDING ADDITIONAL LIMITS OF DISTURBANCE TO THE PROJECT ESTIMATED QUANTITIES.

3. AN ADDITIONAL 0.30 ACRES HAS BEEN ESTIMATED FOR CONTRACTOR ACCESS LOCATIONS AND STORAGE AREAS.

4. TOTAL LIMIT OF DISTURBANCE FOR THIS PROJECT HAS BEEN ESTIMATED TO BE 0.94 ACRES.

5. SEE SPECIFICATIONS FOR CONTRACTOR'S SUBMITTAL REQUIREMENTS IF ADDING ADDITIONAL LIMITS OF DISTURBANCE TO THE PROJECT ESTIMATED QUANTITIES.

LEGEND

CONTRACTOR'S LIMIT OF DISTURBANCE AREA FOR ACCESS AND STORAGE:

STROUDWATER RIVER:
0.28 ACRES
MAINE CENTRAL RAILROAD:
0.20 ACRES

CONTRACT LIMIT OF DISTURBANCE:

STROUDWATER RIVER:
0.08 ACRES
MAINE CENTRAL RAILROAD:
0.08 ACRES

Date:12/19/2013

Filename: 032_Limit_of_Disturbance.dgn

Scale: AS NOTED			
No.	Revision	By	Date

Designed by: HNTB

CONSULTANT PROJECT MANAGER: Robert J. Driscoll, P.E.

	By	Date		By	Date
Designed	CAH	12/13	Checked	TMH	12/13
Drawn	JRD	12/13	In Charge of	RAL	12/13

HNTB CORPORATION
340 County Road, Suite 6-C
Westbrook, ME 04092
TEL (207) 774-5155
FAX (207) 228-0909

MAINE TURNPIKE

THE GOLD STAR MEMORIAL HIGHWAY

MTA PROJECT MANAGER: Ralph C. Norwood, IV, P.E., P.T.O.E.

BRIDGE REPAIRS - STROUDWATER RIVER & MAINE CENTRAL RAILROAD

LIMIT OF DISTURBANCE PLANS

SHEET NUMBER: 32

CONTRACT: 2014.11

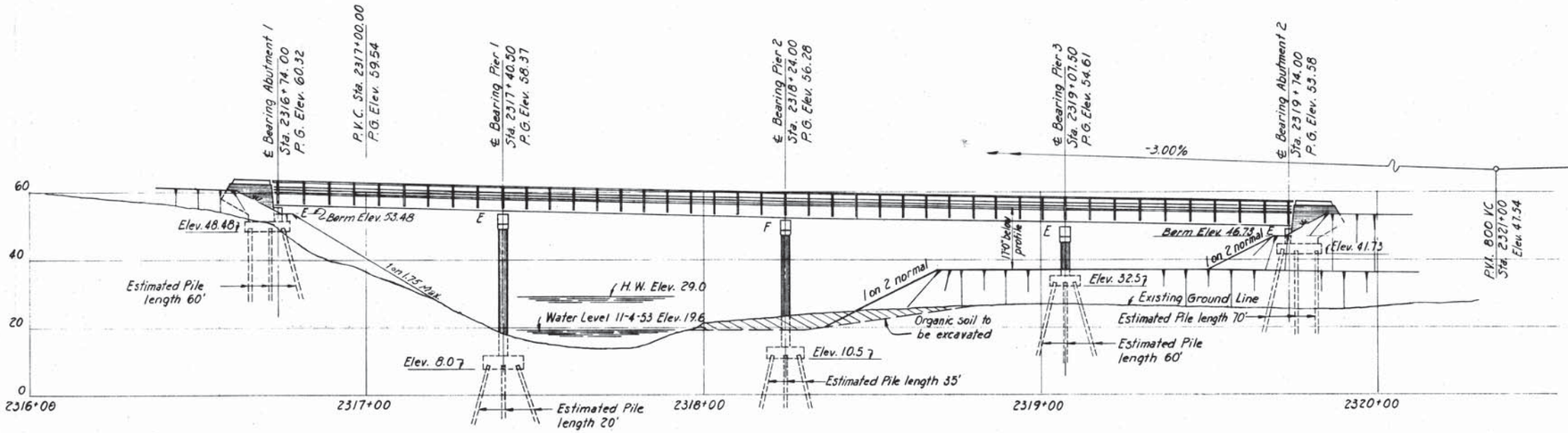

ELEVATION

REFERENCES

Dwg No.	Title	Substr. Contractor	Superstructure Steel Fabr'tor	Superstructure Steel Erector	Superstructure Floor Con'tor
SD1A	Standard Abutment Details	✓	✓	✓	✓
SD2	Standard Pier Details	✓	✓	✓	
SD3	Abutment Drainage Details	✓			
SD4	Standard Pile Details	✓			
SD5	Standard Handrail, Bearing Devises and Miscellaneous Details	✓	✓	✓	✓
SD5A	Standard Bearing Devises for Bridges over Streams	✓	✓	✓	
SD6	Standard Diaphragm Details		✓	✓	✓
SD10	Standard Type "A" Splices for 36 WF Beams		✓	✓	
SD12A	Type "Z" Expansion Joints	✓	✓	✓	✓
SD20	Standard Bridge Floor Cross-Section, Steel Curb, Handrail and Diaphragms, 30 FT. Roadway	✓	✓	✓	✓

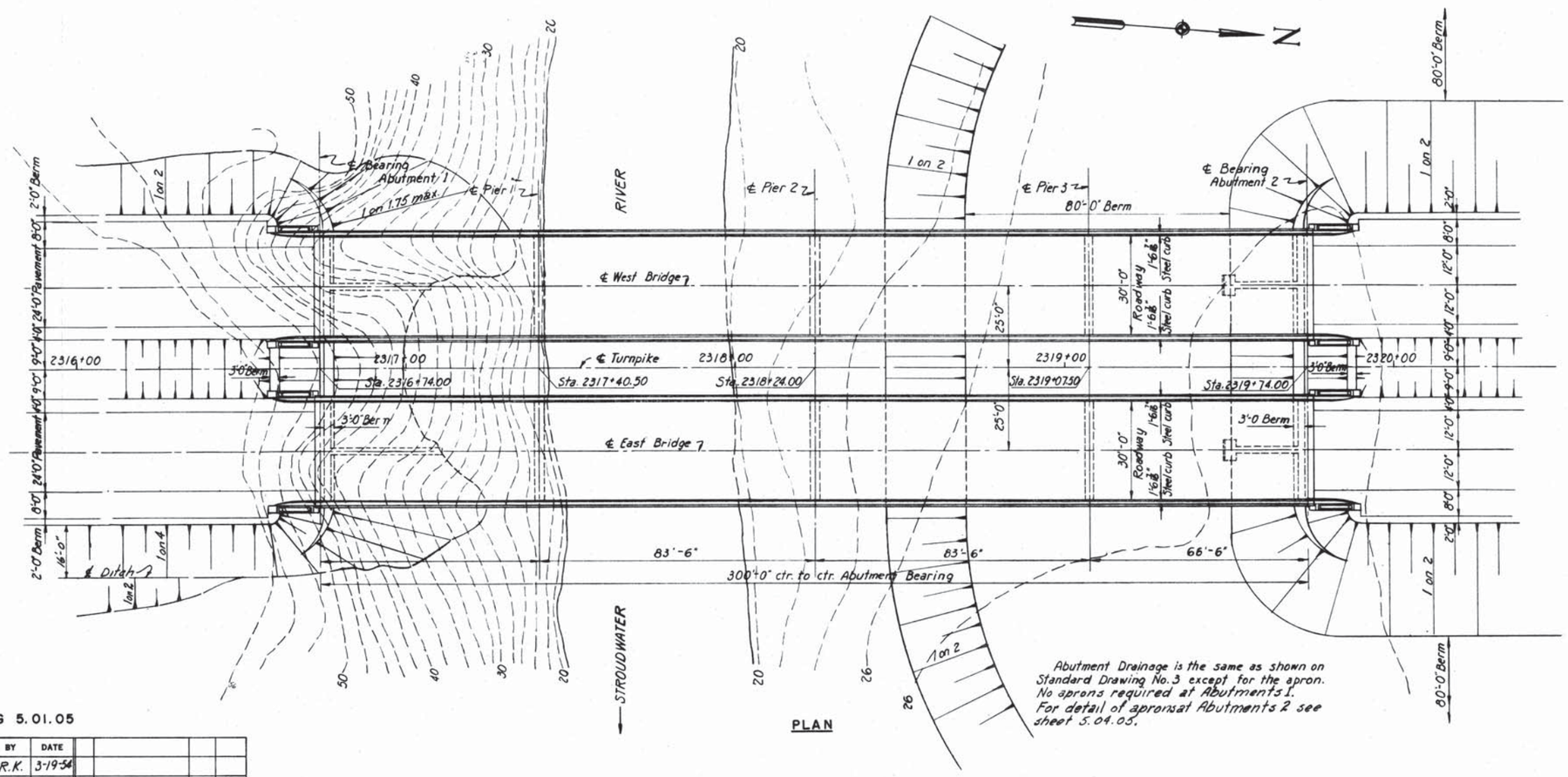

PLAN

GENERAL NOTES

Design Specification: AASHO (1953) with Minor Modifications
Design Live Loading: H 20-S16-44
Maximum Pile Loads
Abutments 1 and 2 = 34 tons
Piers 1 and 2 = 58 tons
Pier 3 = 54.7 tons

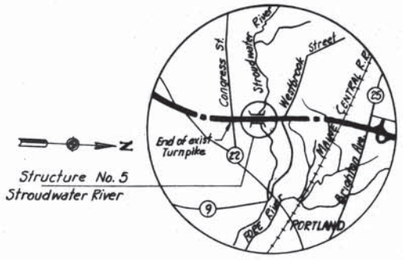

VICINITY MAP
Scale 1"=1 Mile

AB-1

DRAWING 5.01.05

	BY	DATE				
MADE	R.K.	3-19-54				
TRACED						
CHECKED	DHL	3-24-54	1	As-Built	HBH	12-6-56
IN CHARGE OF	IDSK		NO.	REVISION	BY	DATE

MAINE TURNPIKE AUTHORITY
MAINE TURNPIKE
SECTION 2 — PORTLAND TO AUGUSTA

STRUCTURE NO. 5 TURNPIKE OVER
STROUDWATER RIVER
STA. 2318+24
GENERAL PLAN AND ELEVATION

HOWARD, NEEDLES, TAMMEN & BERGENDOFF
CONSULTING ENGINEERS
NEW YORK KANSAS CITY

SCALE: 1"=20'-0"
CONTRACT NO.
SHEET NO. 48 OF 382

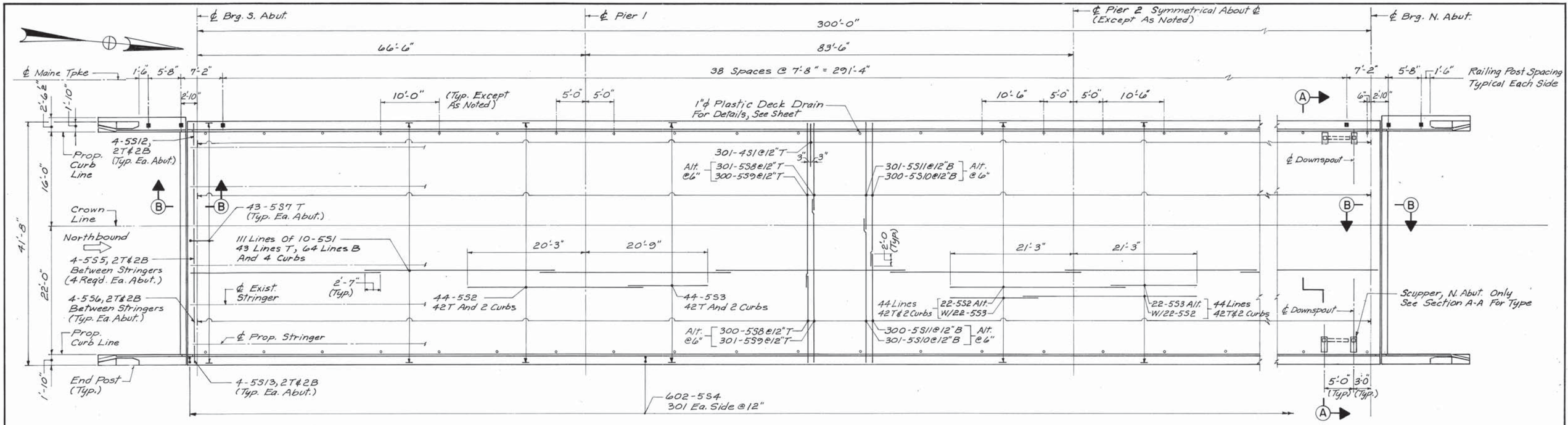

PARTIAL DECK PLAN

(N. B. Shown, S.B. Similar)
1/8" = 1'-0"

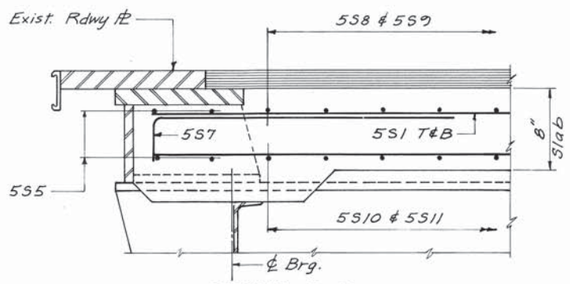

SECTION B - B

No Scale

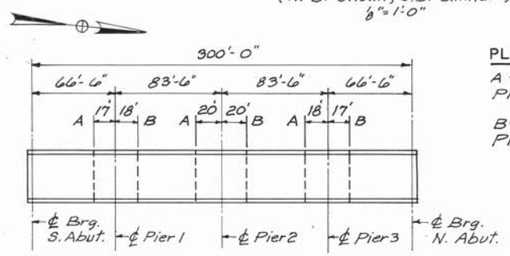

DECK PLACEMENT DETAILS

1" = 60'

PLACEMENT NOTES

A = Termination Points When Placement Starts At South Abut.

B = Termination Points When Placement Starts At North Abut.

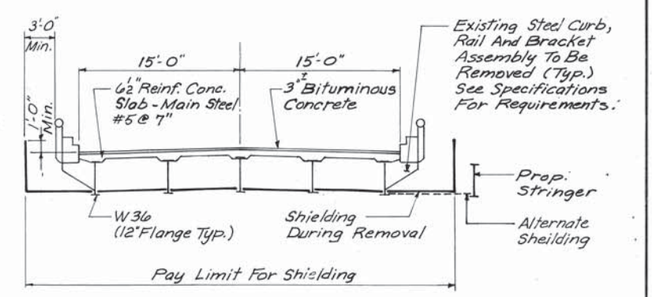

EXISTING DECK REMOVAL

No Scale

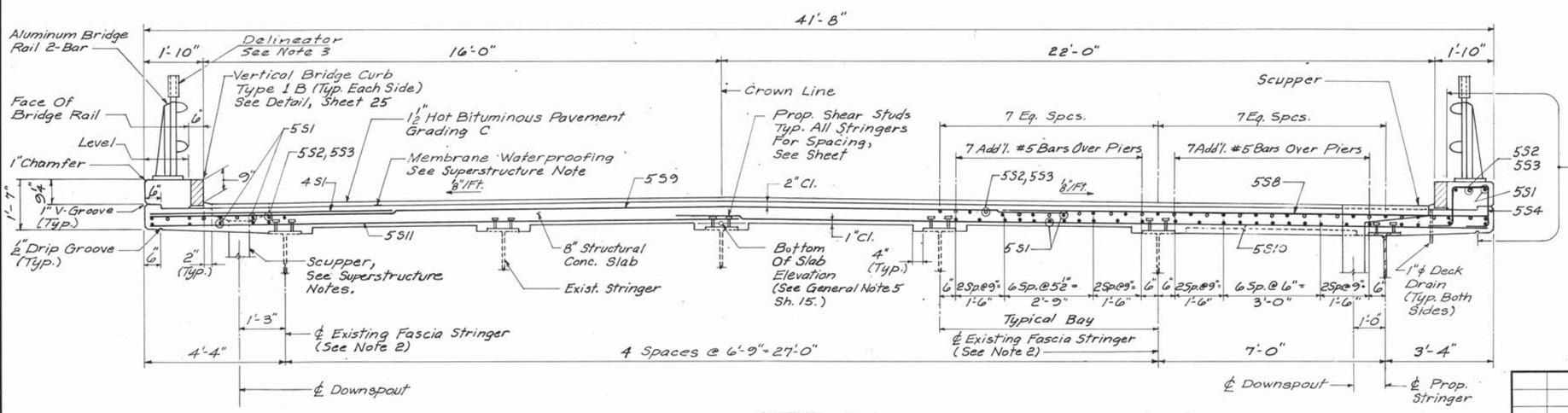

SECTION A - A

1/2" = 1'-0"

NOTES

1. For Superstructure Notes, See Sheet 15.
2. For Modifications To Existing Fascia Stringers, See Sheet 23.
3. Delineators Shall Not Exceed A 60 Foot Spacing On The Bridge. Delineators Shall Be A White Reflective Sheeting Type II Placed On Both Sides Of The Bridge. (Highway Item)

AB-2

No.	Revision	By:	Date:

	By:	Date:
Designed	R.J.R.	11-91
Drawn	R.S.J.	11-91
Checked	R.A.L.	12-91
In charge of: R.A.L.		

Maine Turnpike Authority
Maine Turnpike

MAINE TURNPIKE

STROUDWATER RIVER

SUPERSTRUCTURE DETAILS

HNTB — HOWARD NEEDLES TAMMEN & BERGENDOFF ARCHITECTS ENGINEERS PLANNERS

Contract 92.8

Sheet No. 24 of 34

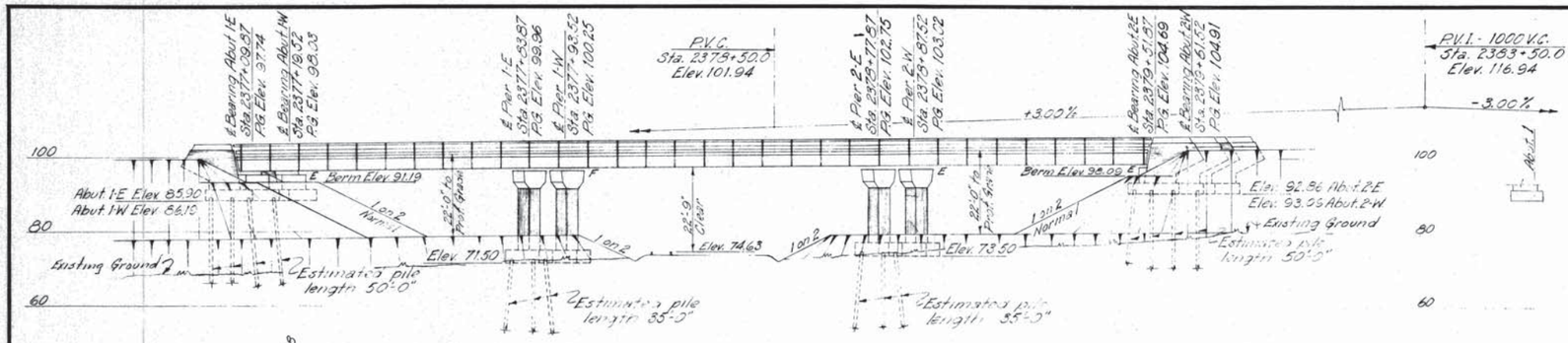

ELEVATION

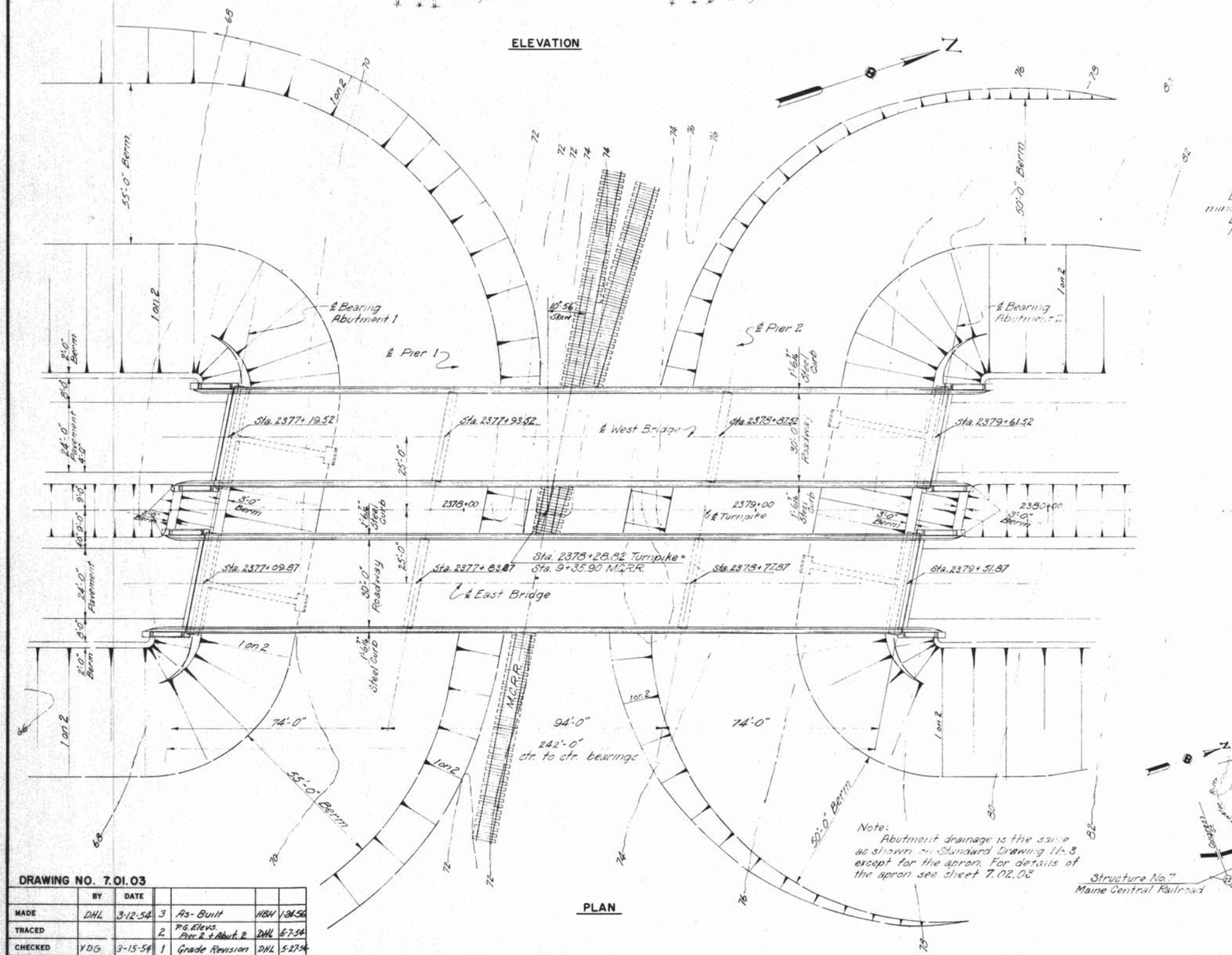

PLAN

Note:
Abutment drainage is the same as shown on Standard Drawing 11-3 except for the apron. For details of the apron see sheet 7.02.03

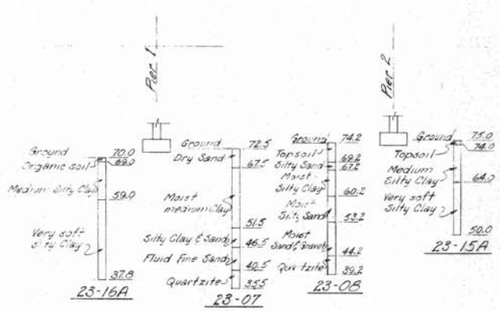

BORINGS

GENERAL NOTES

Design Specifications: AASHO (1953) with minor modifications.
Design Live Load: H 20-S16
Maximum Pile Loads:
For Abutments is 34.7 Tons.
For Piers is 57 Tons.

REFERENCES

Dwg No.	Title	Sub-structure	Superstructure Steel Fabricator	Superstructure Steel Erector	Superstructure Floor Contractor
SD1A	Standard Abutment Details	✓	✓	✓	✓
SD2	Standard Pier Details	✓	✓	✓	
SD4	Standard Pile Details	✓			
SD5	Standard Handrail, Bearing Devises and Miscellaneous Details	✓	✓	✓	✓
SD3	Abutment Drainage Details	✓			
SD6	Standard Diaphragm Details		✓	✓	✓
SD10	Type "A" Splices for 36 WF Beams		✓	✓	
SD11A	Type "X" and "Y" Expansion Joints	✓	✓	✓	✓
SD12A	Type "Z" Expansion Joints	✓	✓	✓	✓
SD20	Standard Bridge Floor Cross Section, Steel Curb, Handrail and Diaphragms - 30' Roadway	✓	✓	✓	✓

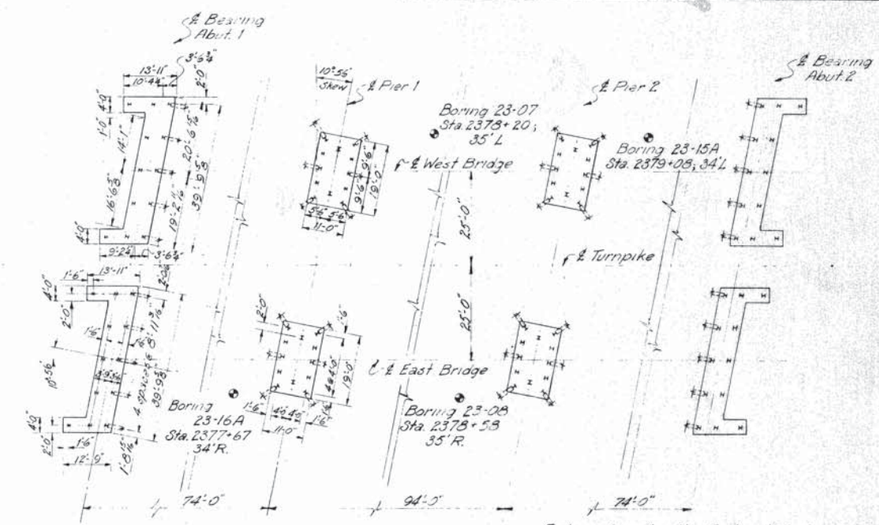

FOOTING PLAN

Footing plans for the East and West bridges are identical except for elevations.
Pier 2 is the same as Pier 1.
Abutment 2 is the same as Abut. 1 by rotation.
Pier piles are 12 BP 53 and Abutments are 10 BP 42. All batters are 3" per foot.

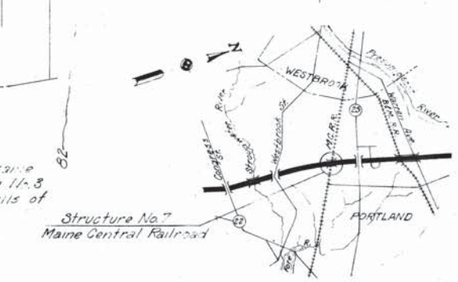

VICINITY MAP
Scale 1" = 1 mile

AB-3

DRAWING NO. 7.01.03						
	BY	DATE				
MADE	DHL	3-12-54	3	As-Built	HBH	1-24-56
TRACED			2.	P.G. Elevs. Pier 2 + Abut. 2	DHL	6-7-54
CHECKED	YDG	3-15-54	1	Grade Revision	DHL	5-27-54
IN CHARGE OF	IDSK		No.	REVISION	BY	DATE

MAINE TURNPIKE AUTHORITY
MAINE TURNPIKE
SECTION 2— PORTLAND TO AUGUSTA
STRUCTURE NO. 7 TURNPIKE OVER
MAINE CENTRAL RAILROAD
STA. 2378+28.82
GENERAL PLAN AND ELEVATION
HOWARD, NEEDLES, TAMMEN & BERGENDOFF
CONSULTING ENGINEERS
NEW YORK KANSAS CITY
SCALE: 1" = 20'
CONTRACT NO.
SHEET NO. 57 OF 382

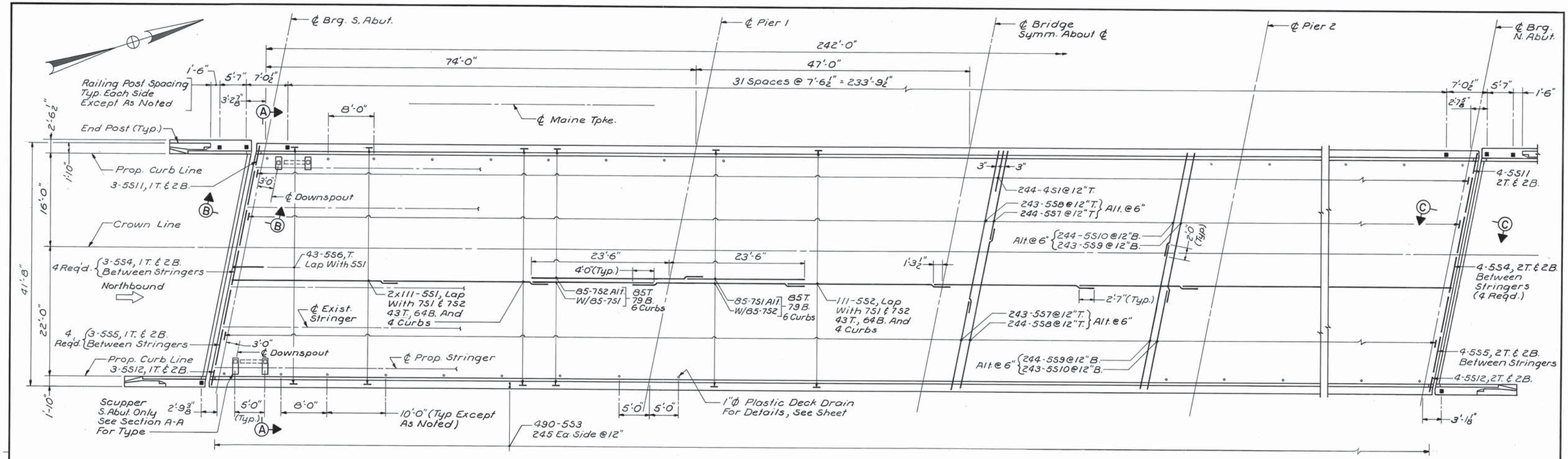

PARTIAL DECK PLAN

(N.B. Shown S.B. Similar)
1" = 1'-0"

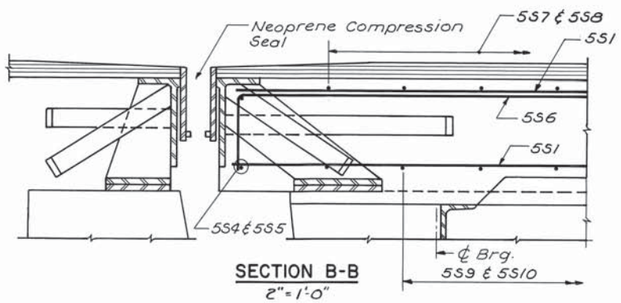

SECTION B-B

2" = 1'-0"

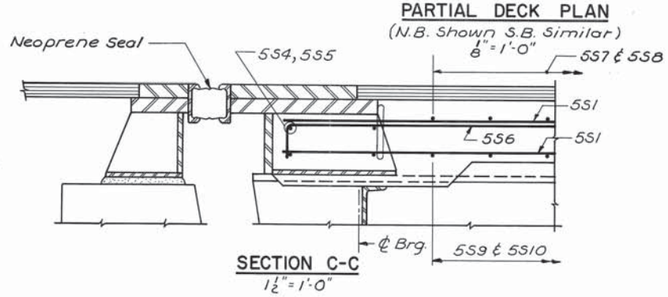

SECTION C-C

1½" = 1'-0"

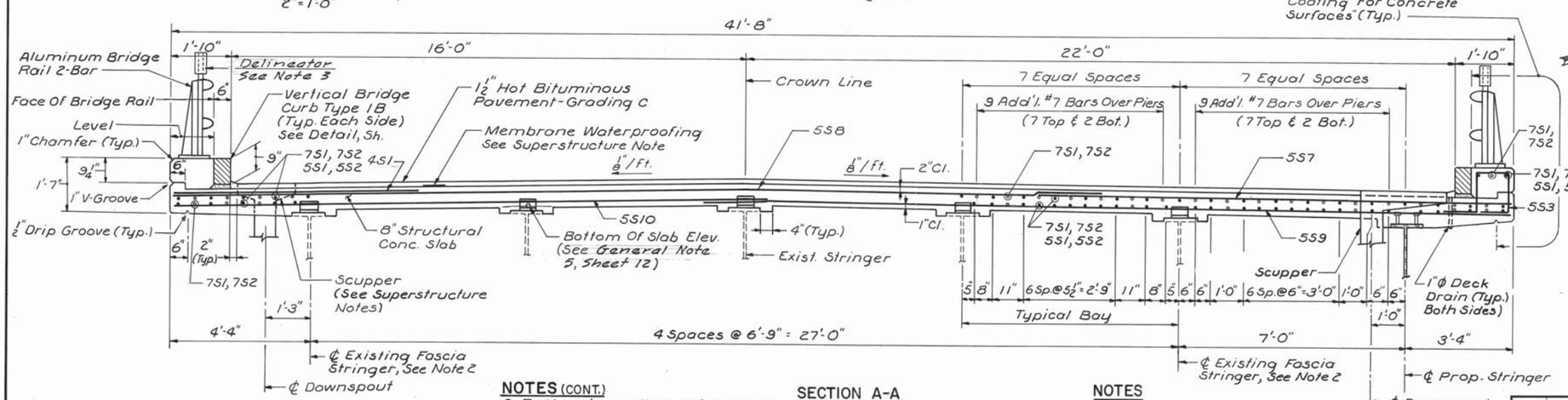

SECTION A-A

2" = 1'-0"

Coat With "Protective Coating For Concrete Surfaces" (Typ.)

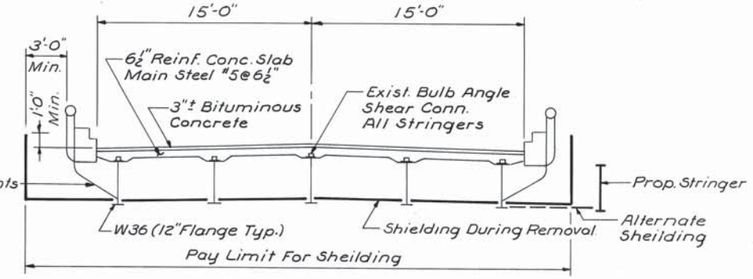

EXISTING DECK REMOVAL

No Scale

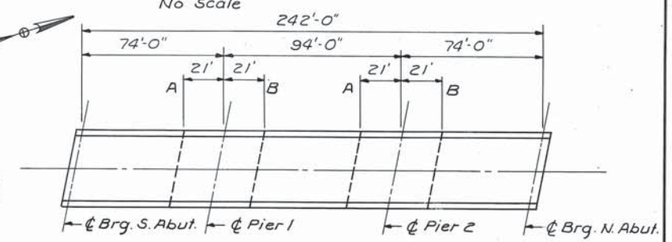

DECK PLACEMENT DETAILS

1" = 40'

PLACEMENT NOTES

A = Termination Points When Placement Starts At South Abut.

B = Termination Points When Placement Starts At North Abut.

NOTES (CONT.)

3. Delineators Shall Not Exceed A 60 Foot Spacing On The Bridge. Delineators Shall Be A White Reflective Sheeting Type II Placed On Both Sides Of The Bridge. (Highway Item)

NOTES

1. For Superstructure Notes, See Sheet 12.
2. For Modifications To Existing Fascia Stringers, See Sheet 20.

No.	Revision	By:	Date:

	By:	Date:
Designed	R.J.R.	11-91
Drawn	R.D.F.	11-91
Checked	R.A.L.	12-91
In charge of:	R.A.L.	

Maine Turnpike Authority
Maine Turnpike

MAINE TURNPIKE

MAINE CENTRAL R.R.

SUPERSTRUCTURE DETAILS

HNTB — HOWARD NEEDLES TAMMEN & BERGENDOFF ARCHITECTS ENGINEERS PLANNERS

Contract 92.9

Sheet No. 21 of 32

AB-4

MAKEPEACE