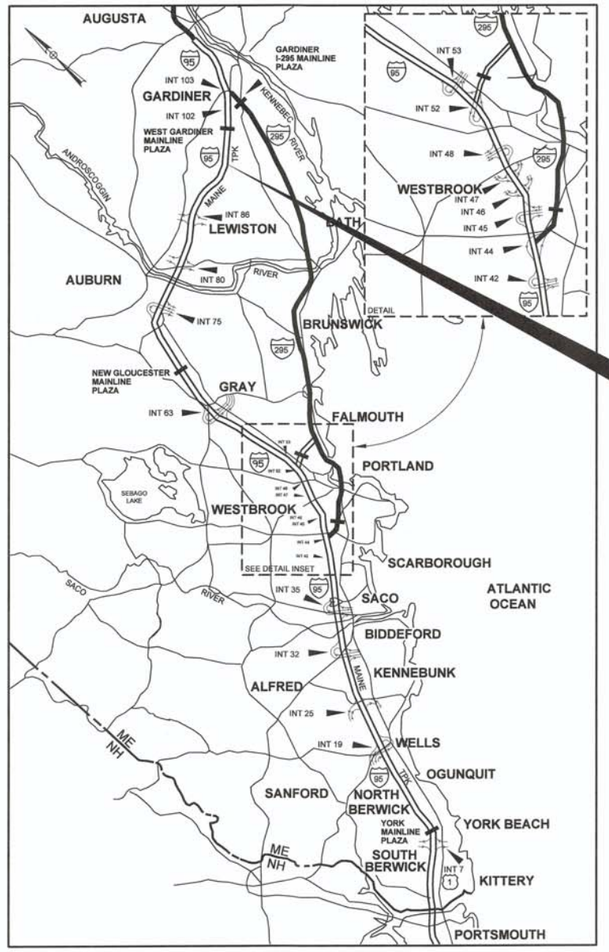

LOCATION MAP

CONTRACT 2016.03
BRIDGE SUPERSTRUCTURE REPLACEMENT
SMALL ROAD UNDERPASS

MAINE TURNPIKE

THE GOLD STAR MEMORIAL HIGHWAY

MAINE TURNPIKE AUTHORITY

DANIEL E. WATHEN, CHAIR
JAMES F. CLOUTIER, VICE CHAIR
GERARD P. CONLEY, SR., MEMBER
JOHN E. DORITY, MEMBER
ROBERT D. STONE, MEMBER
FREEMAN R. GOODRICH, MEMBER
KAREN S. DOYLE, MEMBER EX-OFFICIO

S. PETER MILLS, EXECUTIVE DIRECTOR

INDEX OF SHEETS

SHEET NO.	DESCRIPTION
1	TITLE SHEET
2	ESTIMATED QUANTITIES AND EARTHWORK SUMMARY
3	GENERAL NOTES
4	TYPICAL SECTIONS
5-8	MAINTENANCE OF TRAFFIC
9	MISCELLANEOUS DETAIL SHEET (CHAIN LINK FENCE)
10	MISCELLANEOUS DETAIL SHEET (DOWNSPOUT)
11-12	PLANS
13-14	PROFILES
15	LIMIT OF DISTURBANCE
16-32	CROSS SECTIONS
33-62	STRUCTURAL PLANS
63-65	AS-BUILT STRUCTURAL PLANS

CONTRACT 2016.03
BRIDGE SUPERSTRUCTURE REPLACEMENT
SMALL ROAD UNDERPASS
MILE 95.1

CONTRACT 2016.03

APPROVED:

MAINE TURNPIKE AUTHORITY

Peter S. Merfeld — 12/15/15
PETER S. MERFELD, P.E. - CHIEF OPERATIONS OFFICER — DATE

Stephen R. Tartre — 12/15/15
STEPHEN R. TARTRE, P.E., DIRECTOR OF ENGINEERING & BUILDING MAINTENANCE — DATE

HNTB

STATE OF MAINE
ROLAND A. LAVALLEE
No. 6452
LICENSED
PROFESSIONAL ENGINEER

Roland A. Lavallee — 12/19/15
ROLAND A. LAVALLEE P.E., PLS
VICE PRESIDENT
DIRECTOR OF OPERATIONS
DATE

Date: 12/14/2015

Filename: 001_Title Sheet.dgn

ESTIMATED QUANTITIES

ITEM NO.	ITEM DESCRIPTION	UNIT	STRUCTURAL QUANTITY	CIVIL QUANTITY	TOTAL QUANTITY
201.11	Clearing	AC		0.8	0.8
202.10	Removing Existing Superstructure	LS	1		1
202.12	Removing Existing Structural Concrete	CY	42		42
202.191	Removing Existing Drain Troughs	LS	1		1
202.202	Removing Pavement Surface	SY		390	390
203.20	Common Excavation	CY		950	950
203.24	Common Borrow	CY		400	400
203.43	Geofoam Lightweight Fill	CY	125		125
203.45	Leveling Sand	CY	15		15
206.082	Structural Earth Excavation - Major Structures	CY	160		160
304.10	Aggregate Subbase Course - Gravel	CY	30	1050	1,080
403.210	Hot Mix Asphalt, 9.5 mm Nominal Maximum Size	Ton	140	130	270
403.213	Hot Mix Asphalt, 12.5 mm Nominal Maximum Size, Base	Ton		220	220
409.15	Bituminous Tack Coat, Applied	Gal	47	58	105
502.219	Structural Concrete, Abutments and Retaining Walls	LS	1		1
502.26	Structural Concrete Roadway and Sidewalk Slab on Steel Bridges	LS	1		1
502.49	Structural Concrete Curbs and Sidewalks	LS	1		1
503.14	Epoxy-Coated Reinforcing Steel, Fabricated and Delivered	LB	94000		94,000
503.15	Epoxy-Coated Reinforcing Steel, Placing	LB	94000		94,000
504.702	Structural Steel, Fabricated and Delivered, Welded	LS	1		1
504.71	Structural Steel Erection	LS	1		1
505.08	Shear Connectors	LS	1		1
506.9102	Zinc Rich Coating System (Shop Applied)	LS	1		1
507.0821	Steel Bridge Railing, 3 Bar	LS	1		1
508.13	Sheet Waterproofing Membrane	LS	1		1
508.14	High Performance Waterproofing Membrane	LS	1		1
514.06	Curing Box for Concrete Cylinders	EA	1		1
515.201	Pigmented Protective Coating for Concrete Surfaces	SY	350		350
515.202	Clear Protective Coating for Concrete Surfaces	SY	430		430
518.10	Abutment Repairs	SF	20		20
518.20	Pier Repairs	SF	430		430
518.30	Abutment Seat Refacing	CY	8		8
520.221	Expansion Devices - Locking Compression Seal with Steel Edge Beams	EA	2		2
523.521	Bearing Removal and Installation	EA	20		20
523.5401	Laminated Elastomeric Bearings, Fixed	EA	4		4
523.5402	Laminated Elastomeric Bearings, Expansion	EA	16		16
524.40	Protective Shielding - Steel Girders	SY	1210		1,210
526.306	Temporary Concrete Barrier, Type I, Supplied by Authority	LS		1	1
527.34	Work Zone Crash Cushions	Unit		1	1
606.1728	W-Beam to 3-Bar Bridge Rail Transition	EA	4		4
606.244	Guardrail Type 3d - Single Rail, 7 Foot Posts	LF		1000	1,000
606.3531	Delineator Post	EA		8	8
606.47	Single Wood Post	EA		1	1
606.78	Low Volume Guardrail End - Type 3	EA		4	4
607.17	Chain Link Fence - 6 Foot	LF		210	210
607.23	Chain Link Fence Gate	EA		2	2
607.32	Bracing Assembly Type I - Metal Posts	EA		8	8
607.33	Bracing Assembly Type II - Metal Posts	EA		4	4
607.431	Snow Fence	LF	336		336
609.11	Vertical Curb Type 1	LF	80		80
610.18	Stone Ditch Protection	CY		53	53
613.319	Erosion Control Blanket	SY		1600	1,600
615.07	Loam	CY		220	220
618.141	Seeding Method Number 3	Unit		18	18
619.1201	Mulch, Plan Quantity	Unit		18	18
619.1202	Temporary Mulch	LS		1	1
619.1401	Erosion Control Mix	CY	72		72
620.58	Erosion Control Geotextile	SY		170	170
620.625	Cellular Confinement System	SY		990	990
620.70	HDPE Geomembrane	SY	250		250

ESTIMATED QUANTITIES

ITEM NO.	ITEM DESCRIPTION	UNIT	STRUCTURAL QUANTITY	CIVIL QUANTITY	TOTAL QUANTITY
629.05	Hand Labor, Straight Time	HR		60	60
631.10	Air Compressor (including operator)	HR		20	20
631.11	Air Tool (including operator)	HR		40	40
631.12	All Purpose Excavator (including operator)	HR		10	10
631.171	Truck - small (including operator)	HR		20	20
631.36	Foreman	HR		20	20
645.109	Remove and Reset Sign	EA		3	3
652.30	Flashing Arrow	EA		2	2
652.312	Type III Barricades	EA		10	10
652.33	Drum	EA		90	90
652.34	Cone	EA		20	20
652.35	Construction Signs	SF		1500	1,500
652.361	Maintenance of Traffic Control Devices	LS		1	1
652.38	Flaggers	HR		150	150
652.41	Portable Changeable Message Sign	EA		2	2
652.45	Truck Mounted Attenuator	CD		100	100
656.50	Baled Hay, in place	EA		20	20
656.60	Temporary Berms	LF		1320	1,320
656.62	Temporary Slope Drains	LF		190	190
656.632	30 inch Temporary Silt Fence	LF		1960	1,960
659.10	Mobilization	LS		1	1

EARTHWORK SUMMARY

COMMON EXCAVATION FOR ESTIMATE

COMMON EXCAVATION (FROM CROSS SECTIONS)	659	
GRUBBING IN FILL	285	
TOTAL COMMON EXCAVATION (for estimate)		944

FILL FOR BORROW CALCULATIONS

COMMON FILL (FROM CROSS SECTIONS)	398	
GRUBBING IN FILL	285	
TOTAL FILL		683

AVAILABLE COMMON EXCAVATION FOR BORROW CALCULATIONS

(1) TOTAL COMMON EXCAVATION		944
DEDUCTIONS:		
GRUBBING IN CUT	191	
GRUBBING IN FILL	285	
PAVEMENT SALVAGE (CUT & FILL)	144	
(2) TOTAL DEDUCTIONS		620
TOTAL AVAILABLE COMMON EXCAVATION (1) MINUS (2)		324
UNDERDRAIN ONLY)		
RIPRAP EXCAVATION		0
TOTAL AVAILABLE NON-ROCK EXCAVATION		324

COMPUTATION FOR COMMON BORROW FOR ESTIMATE

(3)TOTAL FILL		683
TOTAL AVAIL. NON-ROCK EXCAV.	324 x 0.90 = 292	
(4)TOTAL AVAILABLE EXCAVATION	=	292
BORROW NEEDED = TOTAL FILL MINUS TOTAL AVAILABLE EXCAVATION		391

Date:12/23/2015

Filename: 002_Est Qtys & EWSummary.dgn

Scale:

No.	Revision	By	Date

Designed by: HNTB

CONSULTANT PROJECT MANAGER: Dale A. Mitchell, P.E.

	By	Date		By	Date
Designed	LZD	11/15	Checked	DAM	11/15
Drawn	SLR	11/15	In Charge of	RAL	11/15

HNTB CORPORATION
340 County Road, Suite 6-C
Westbrook, ME 04092
TEL (207) 774-5155
FAX (207) 228-0909

MAINE TURNPIKE

THE GOLD STAR MEMORIAL HIGHWAY

MTA PROJECT MANAGER: Ralph C. Norwood IV, P.E., P.T.O.E.

BRIDGE SUPERSTRUCTURE REPLACEMENT
SMALL ROAD UNDERPASS

ESTIMATED QUANTITIES
& EARTHWORK SUMMARY

SHEET NUMBER: ES-01

CONTRACT:2016.03

GENERAL

1. ALL DETAILS SHALL BE IN CONFORMANCE WITH MAINE DEPARTMENT OF TRANSPORTATION (MDOT) STANDARD DETAILS HIGHWAYS AND BRIDGES LATEST REVISION AND MDOT BEST MANAGEMENT PRACTICES FOR EROSION AND SEDIMENT CONTROL LATEST REVISION UNLESS OTHERWISE INCLUDED IN THESE PLANS.

2. CHAIN LINK FENCE GATES SHALL BE 4' WIDE SINGLE GATES. A GATE SHALL BE LOCATED ON EACH SIDE OF THE TURNPIKE ROADWAY. EXACT LOCATION OF THE GATE SHALL BE DETERMINED IN THE FIELD BY THE RESIDENT.

3. CONNECTIONS FOR EXISTING FENCE TO PROPOSED FENCE SHALL BE INCIDENTAL TO THE PROPOSED FENCE ITEMS.

4. EXISTING ROW FENCE WITHIN THE LIMITS OF WORK, AS SHOWN ON THE PLANS OR AS DIRECTED BY THE RESIDENT, SHALL BE REMOVED AND DISPOSED. THIS WORK SHALL BE INCIDENTAL TO SECTION 607.

5. CONTRACTOR IS REQUIRED TO MAINTAIN ACCESS TO ALL DRIVEWAYS AND SIDE ROADS DURING CONSTRUCTION UNLESS OTHERWISE SHOWN ON THE PLANS.

6. THE CONTRACTOR SHALL SUBMIT HIS PROPOSED STAGING AREA(S) AND FIELD TRAILER LOCATION TO THE RESIDENT FOR APPROVAL PRIOR TO STARTING WORK.

7. NO WETLANDS SHALL BE IMPACTED.

8. THE CONTRACTOR IS REQUIRED TO CALL DIG SAFE AT 1-888-344-7233 AT LEAST 72 HOURS PRIOR TO START OF WORK.

9. THE CONTRACTOR SHALL NOTIFY THE RESIDENT 10 DAYS PRIOR TO CONSTRUCTION SO THE RESIDENT CAN ARRANGE FOR MAINE TURNPIKE UNDERGROUND UTILITY LOCATION. ALL PROPOSED SIGN LOCATIONS AND EXCAVATION LOCATIONS SHALL BE MARKED AT THE NOTIFICATION TIME. EXCAVATING WILL NOT BE PERMITTED UNTIL THE AUTHORITY HAS LOCATED AND MARKED ITS' UNDERGROUND UTILITIES, OR NOTIFIED THE RESIDENT THERE ARE NO UNDERGROUND UTILITIES IN THE MARKED AREAS.

10. EXISTING AND PROPOSED ELEVATIONS ARE BASED ON A LOCAL PROJECT BENCHMARK. THE BENCHMARK IS A GPS BASE POINT AT N477666.166 E301617.5.605 WITH ELEVATION 235.55.

EROSION CONTROL

1. THE ANTICIPATED EROSION CONTROL DEVICES ARE SHOWN ON THE PLANS. THE CONTRACTOR SHALL PROPOSE ACTUAL TYPE AND LOCATION OF DEVICES FOR APPROVAL BY THE RESIDENT. ADDITIONAL MEASURES MAY BE PROPOSED BY THE CONTRACTOR DUE TO SITE OR WEATHER CONDITIONS. THE RESIDENT MAY DIRECT THE CONTRACTOR TO IMPLEMENT ADDITIONAL MEASURES. ANY ADDITIONAL MEASURES APPROVED OR DIRECTED BY THE RESIDENT WILL BE MEASURED FOR PAYMENT.

2. 4" LOAM HAS BEEN ESTIMATED FOR 100% OF THE DISTURBED SLOPE AREA UNLESS OTHERWISE SPECIFIED ON THE PLANS. ACTUAL PLACEMENT OF THE LOAM SHALL BE AS DESIGNATED BY THE RESIDENT.

3. ALL TEMPORARY AND PERMANENT EROSION CONTROL DEVICES SHALL BE INSTALLED IN ACCORDANCE WITH THE MAINE DEPARTMENT OF TRANSPORTATION BEST MANAGEMENT PRACTICES.

4. TEMPORARY STONE CHECK DAMS SHALL BE INSTALLED IN ACCORDANCE WITH THE MDOT BEST MANAGEMENT PRACTICES.

5. TEMPORARY BERMS AND TEMPORARY SLOPE DRAINS ARE ANTICIPATED AT ALL STONE DOWNSPOUT LOCATIONS AND TOP OF EMBANKMENTS WHILE GROWTH IS BEING ESTABLISHED ON SIDE SLOPES.

6. TEMPORARY EROSION CONTROL BLANKET, ITEM 613.319 SHALL BE INSTALLED IN ALL DITCHES AND SLOPES 2:1 AND STEEPER FROM TOP TO TOE OF SLOPE. LOAM AND SEED SHALL BE PLACED PRIOR TO THE INSTALLATION OF THE EROSION CONTROL BLANKET. LIMITS OF THE EROSION CONTROL BLANKET IN DITCHES SHALL BE 6' WIDE UNLESS OTHERWISE SPECIFIED ON THE PLANS OR AS DESIGNATED BY THE RESIDENT.

GUARDRAIL

1. STEEL CABLE GUARDRAIL EXISTS ON THE PROJECT SITE. THE GUARDRAIL IS MOSTLY LAYING ON THE GROUND, TWISTED AMONGST THE TREES AND BRUSH. THE CONTRACTOR SHALL REMOVE AND DISPOSE OF THE EXISTING STEEL CABLE GUARDRAIL. PAYMENT SHALL BE INCIDENTAL TO SECTION 606 GUARDRAIL ITEMS.

2. AT THE END OF EACH WORK DAY, THE CONTRACTOR IS REQUIRED TO HAVE AN APPROVED CRASHWORTHY END TREATMENT ON ALL GUARDRAIL WITHIN ALL WORK AREAS THAT ARE ACCESSIBLE TO TRAFFIC.

3. SEE SHEET MD-02 FOR THE SHOULDER PAVEMENT LIMITS FROM THE BRIDGE JOINT TO THE STONE DOWNSPOUT.

4. PROPOSED MAILBOX POSTS SHALL BE A 4X4 WOOD POST SET 45" HIGH WITH A 2 FOOT EMBEDMENT. OFFSET SHALL BE A MINIMUM OF 1 FOOT BEYOND THE EDGE OF SHOULDER OR SIMILAR TO EXISTING, WHICHEVER IS GREATER. PAYMENT SHALL BE UNDER ITEM 606.47 SINGLE WOOD POST.

5. THE CONTRACTOR WILL BE RESPONSIBLE FOR MAINTAINING ALL EXISTING MAILBOXES TO ENSURE THAT THE MAIL WILL BE DELIVERABLE. PAYMENT FOR THIS WORK WILL BE MADE UNDER THE APPROPRIATE RENTAL ITEMS.

EARTHWORK

1. ALL CLEARING SHALL BE COMPLETED BEFORE APRIL 1, 2016. CLEARING LIMITS SHALL BE 5' BEYOND AND PARALLEL TO THE CONSTRUCTION SLOPE LINES OR AS SHOWN ON THE PLANS UNLESS OTHERWISE AUTHORIZED BY THE RESIDENT. THE ACTUAL CLEARING LINES SHALL BE ESTABLISHED IN THE FIELD BY THE CONTRACTOR AND SHALL BE APPROVED BY THE RESIDENT PRIOR TO ANY CLEARING TAKING PLACE.

2. INDIVIDUAL TREES WITHIN THE SLOPE LIMIT LINES OR CALLED TO BE REMOVED ON THE PLANS, SHALL BE REMOVED AND DISPOSED. THIS WORK SHALL BE INCIDENTAL TO THE CONTRACT.

3. THE NORMAL GRUBBING WIDTH IN FILLS SHALL BE VARIABLE LEFT OR RIGHT WHEN SUBGRADE IS LESS THAN 5' ABOVE OLD GROUND. THE GRUBBING DEPTH HAS BEEN ESTIMATED AS 6" IN FIELD AREAS AND 12" IN WOODED AREAS.

4. WASTE MATERIALS SHALL BE DISPOSED OF OFF THE PROJECT SITE, IN ACCORDANCE WITH ALL ENVIRONMENTAL REGULATIONS.

5. REMOVAL OF EXISTING PAVEMENT SHALL BE PAID FOR AS COMMON EXCAVATION. EXISTING PAVEMENT THICKNESS HAS BEEN ESTIMATED TO BE 6".

LOCAL ROAD

1. PAVED ENTRANCES SHALL BE CONSTRUCTED WITH:
   2" HOT MIX ASPHALT, 9.5 MM
   12" AGGREGATE SUBBASE COURSE GRAVEL.

2. UNPAVED ENTRANCES SHALL BE CONSTRUCTED WITH:
   14" AGGREGATE SUBBASE COURSE GRAVEL.

3. A 3' PAVED LIP SHALL BE PLACED AT ALL GRAVEL ENTRANCES EXCEPT WOODS AND FIELD ENTRANCES UNLESS OTHERWISE DIRECTED BY THE RESIDENT.

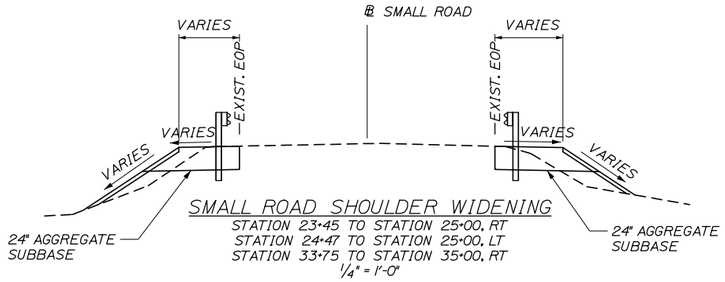

SMALL ROAD SHOULDER WIDENING
STATION 23+45 TO STATION 25+00, RT
STATION 24+47 TO STATION 25+00, LT
STATION 33+75 TO STATION 35+00, RT
1/4" = 1'-0"

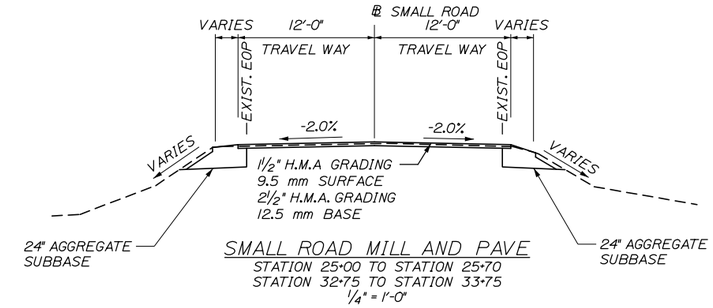

SMALL ROAD MILL AND PAVE
STATION 25+00 TO STATION 25+70
STATION 32+75 TO STATION 33+75
1/4" = 1'-0"

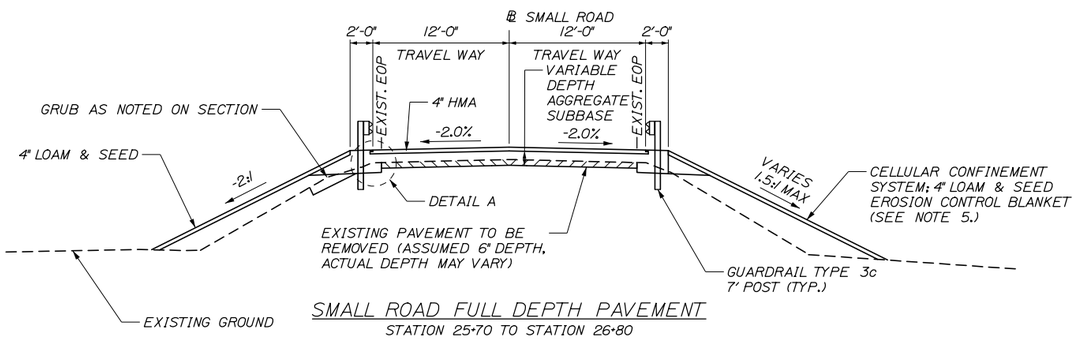

SMALL ROAD FULL DEPTH PAVEMENT
STATION 25+70 TO STATION 26+80
STATION 31+75 TO STATION 32+75
1/4" = 1'-0"

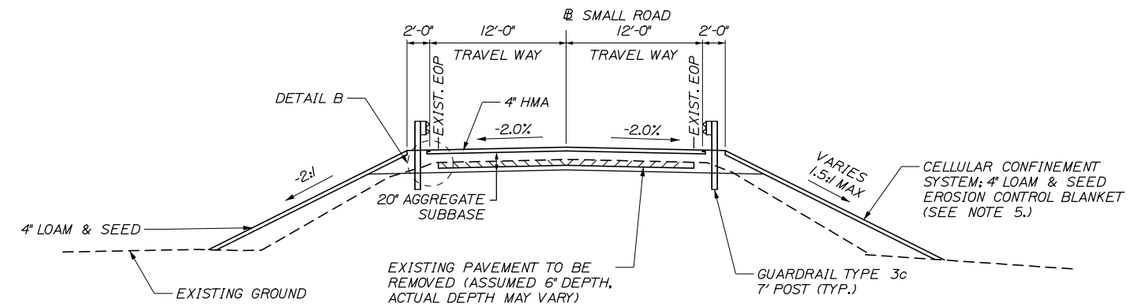

SMALL ROAD FULL DEPTH CONSTRUCTION
STATION 26+80 TO STATION 28+54
STATION 31+56 TO STATION 31+75
1/4" = 1'-0"

NOTES:

1. THE PAVEMENT, BASE, AND SUBBASE DEPTHS, AS SHOWN ON THE PLANS, ARE INTENDED TO BE NOMINAL.

2. CROWNS FOR ALL COURSES OF SUBBASE AND PAVEMENT SHALL BE STRAIGHT.

3. ALL NECESSARY PAVEMENT CUTTING SHALL BE SAWCUT AND DONE IN SUCH A MANNER AS TO LEAVE A CLEAN, VERTICAL FACE.

4. BITUMINOUS TACK COAT IS REQUIRED BETWEEN ALL LIFTS OF PAVEMENT AND ON ALL EXISTING PAVED OR MILLED SURFACES PRIOR TO PLACING PROPOSED PAVEMENT OR AS DIRECTED BY THE RESIDENT.

5. CELLULAR CONFINEMENT SYSTEM SHALL BE INSTALLED ON ALL SLOPES STEEPER THAN 2:1. SLOPES SHALL BE GRUBBED, BACKFILLED AND COMPACTED PRIOR TO CELLULAR CONFINEMENT SYSTEM INSTALLATION. SEE SPECIFICATION FOR ADDITIONAL INFORMATION.

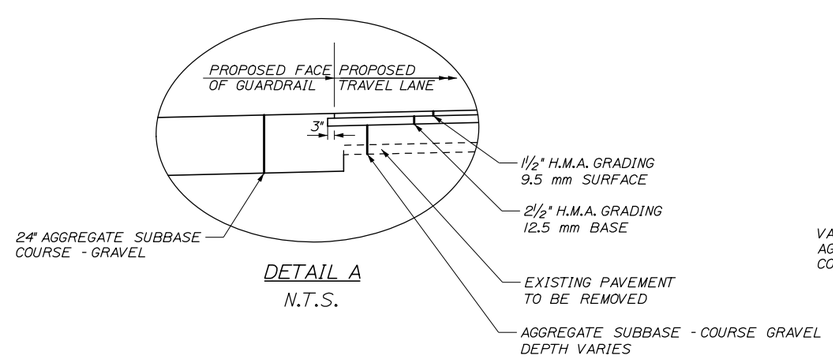

DETAIL A
N.T.S.

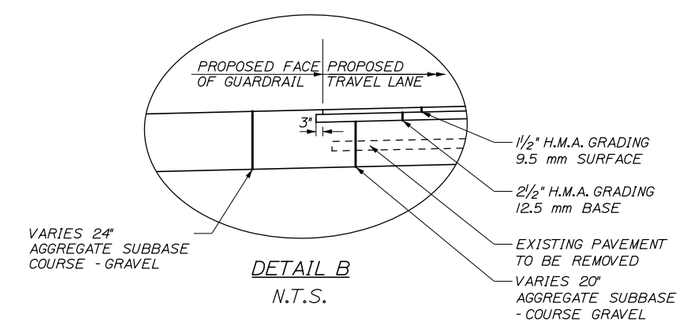

DETAIL B
N.T.S.

Date:12/23/2015

Filename: 004_TypicalSections.dgn

Scale: AS NOTED			
No.	Revision	By	Date

Designed by: HNTB

CONSULTANT PROJECT MANAGER: Dale A. Mitchell, P.E.

	By	Date		By	Date
Designed	LZD	11/15	Checked	DAM	11/15
Drawn	SLR	11/15	In Charge of	RAL	11/15

HNTB CORPORATION
340 County Road, Suite 6-C
Westbrook, ME 04092
TEL (207) 774-5155
FAX (207) 228-0909

MAINE TURNPIKE

THE GOLD STAR MEMORIAL HIGHWAY

MTA PROJECT MANAGER: Ralph C. Norwood IV, P.E., P.T.O.E.

BRIDGE SUPERSTRUCTURE REPLACEMENT
SMALL ROAD UNDERPASS

TYPICAL SECTIONS

SHEET NUMBER: TS-01

CONTRACT:2016.03

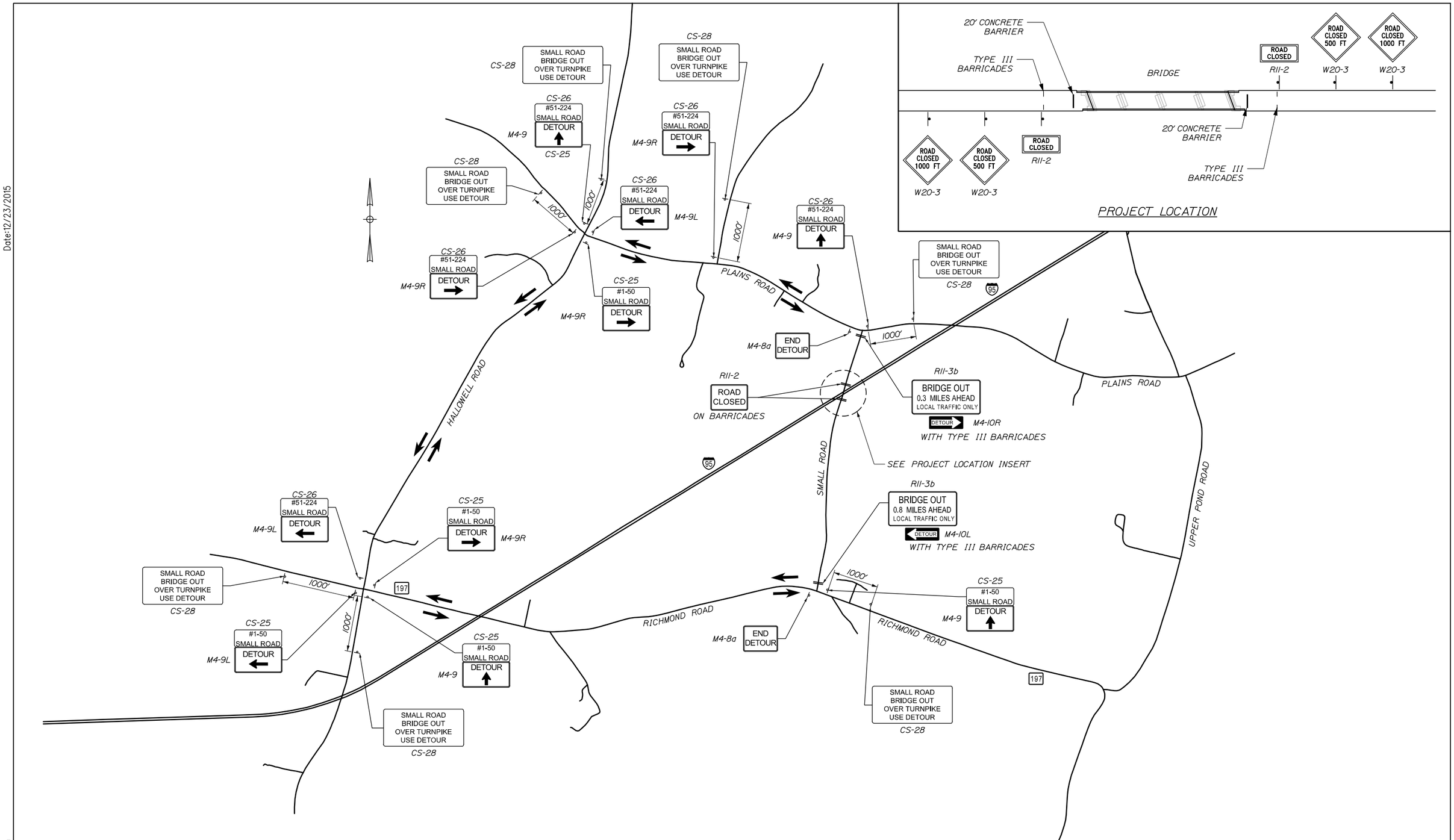

Date:12/23/2015

Filename: 005_Detour Plan.dgn

Scale:

No.	Revision	By	Date

Designed by:

HNTB

CONSULTANT PROJECT MANAGER: Dale A. Mitchell, P.E.

	By	Date		By	Date
Designed	SLR	11/15	Checked	DAM	11/15
Drawn	SLR	11/15	In Charge of	RAL	11/15

HNTB CORPORATION
340 County Road, Suite 6-C
Westbrook, ME 04092
TEL (207) 774-5155
FAX (207) 228-0909

MAINE TURNPIKE

THE GOLD STAR MEMORIAL HIGHWAY

MTA PROJECT MANAGER: Ralph C. Norwood IV, P.E., P.T.O.E.

BRIDGE SUPERSTRUCTURE REPLACEMENT
SMALL ROAD UNDERPASS

MAINTENANCE OF TRAFFIC
DETOUR PLAN

SHEET NUMBER: MT-01

CONTRACT:2016.03

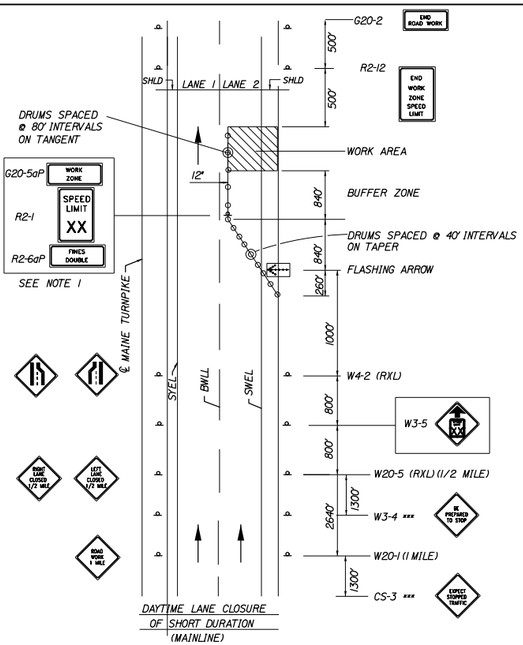

DAYTIME LANE CLOSURE
OF SHORT DURATION
(MAINLINE)

SINGLE LANE CLOSURE SIGNS ON EASELS

1. FOR EASEL SET UP ONLY. THIS SIGN IS NOT BRACKETED. ONE SIGN ASSEMBLY IS PLACED AT THE END OF THE TAPER .

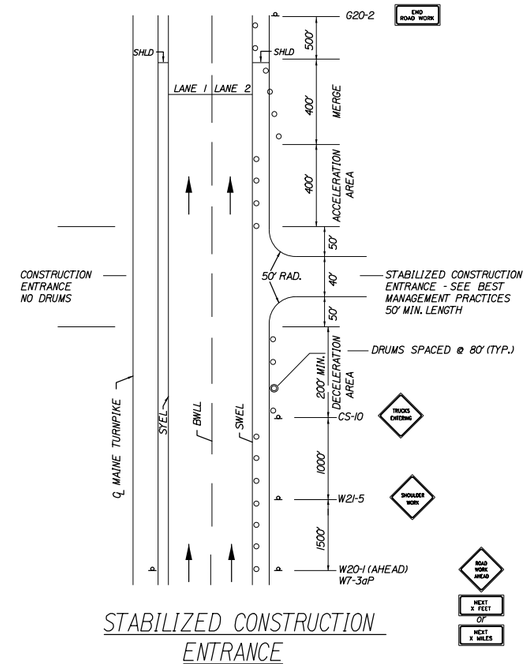

STABILIZED CONSTRUCTION ENTRANCE

1. SIGN G20-2 IS NOT REQUIRED IF ENTRANCE IS WITHIN THE WORK ZONE.

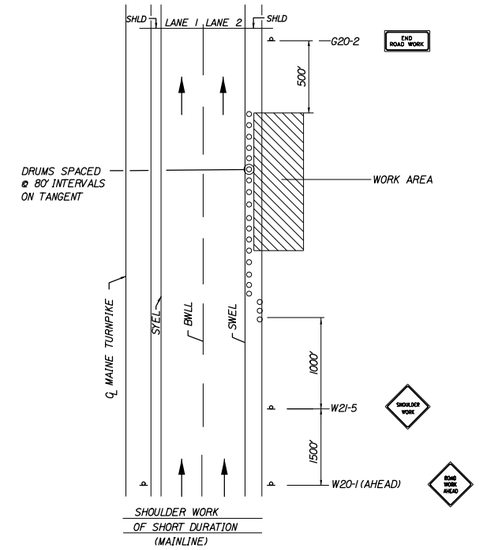

SHOULDER WORK
OF SHORT DURATION
(MAINLINE)

SHOULDER WORK

1. THE W20-1 AND G20-2 SIGNS ARE NOT REQUIRED IF THE SHOULDER CLOSURE IS WITHIN A PREVIOUSLY ESTABLISHED WORK ZONE.

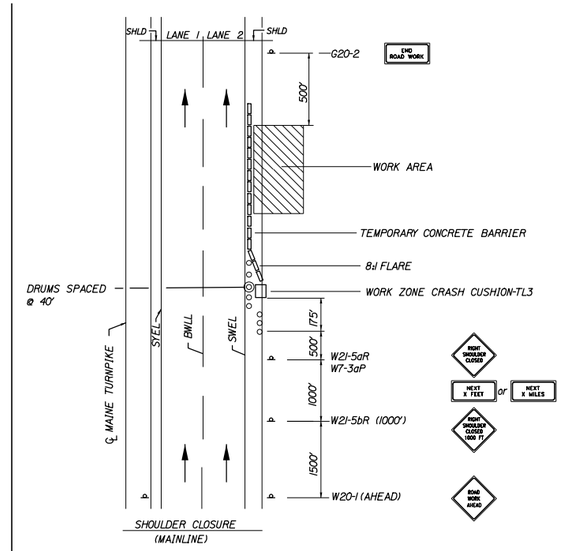

SHOULDER CLOSURE
(MAINLINE)

SHOULDER CLOSURE

1. THE W20-1 AND G20-2 SIGNS ARE NOT REQUIRED IF THE SHOULDER CLOSURE IS WITHIN A PREVIOUSLY ESTABLISHED WORK ZONE.

2. SHOULDER CLOSURE PERMITTED ONLY ON ONE BOUND AT A TIME.

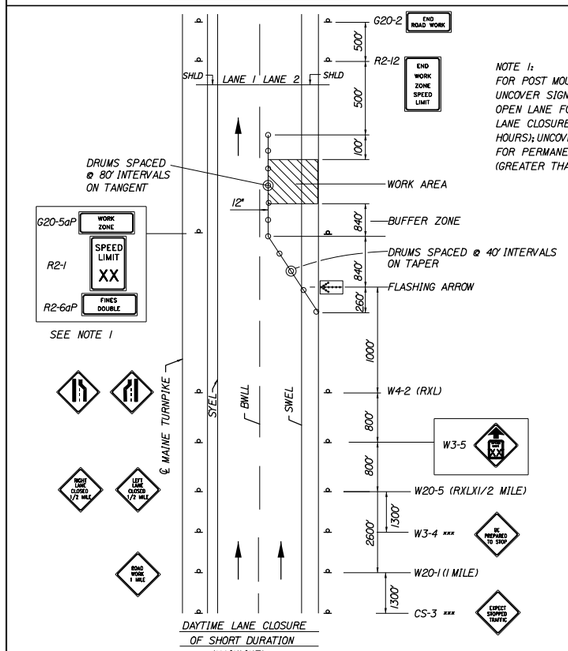

DAYTIME LANE CLOSURE
OF SHORT DURATION
(MAINLINE)

SINGLE LANE CLOSURE - POST MOUNTED SIGN SETUP

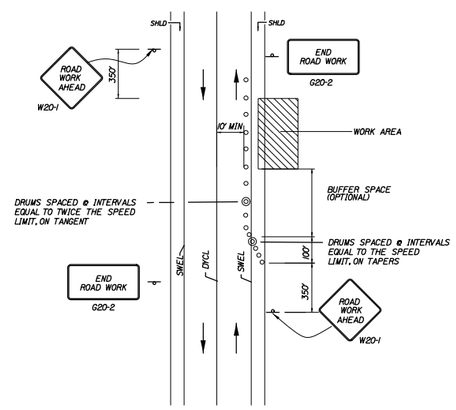

TEMP. LOCAL ROAD SHOULDER CLOSURE

NOTES:
1. FOR SHORT DURATION WORK (<1 HOUR). THE TAPER AND CHANNELIZATION DEVICES MAY BE OMITTED IF SHADOW VEHICLE IS PRESENT WITH ACTIVATED HIGH-INTENSITY ROTATING, FLASHING, OSCILLATING OR STROBE LIGHTS.

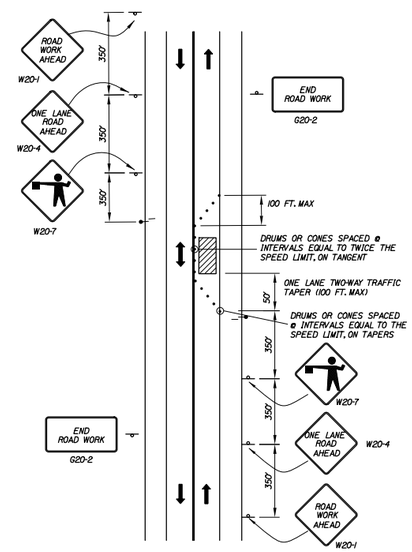

LOCAL ROAD SINGLE LANE CLOSURE

NOTES:
1. ROAD WORK AHEAD & END ROAD WORK SIGNS MAY BE OMITTED FOR SHORT DURATION OPERATIONS (LESS THAN 1 HOUR).

2. FLAGGERS SHALL BE LOCATED SO THEY ARE CLEARLY VISIBLE TO APPROACHING DRIVERS.

3. SIGN SPACING ASSUMES LOCAL ROAD SPEED IS 40 MPH OR LESS.

GENERAL MAINTENANCE OF TRAFFIC NOTES:

1. ALL PAVMENT STRIPING & SIGNING SHALL BE IN ACCORDANCE WITH THE "MANUAL ON UNIFORM TRAFFIC CONTROL DEVICES", U.S.D.O.T., F.H.W.A., LATEST EDITION.

2. THESE PLANS SHOW THE GENERAL CONDITION FOR TURNPIKE MAINLINE TRAFFIC CONTROL. DURING CONSTRUCTION, SLIGHT MODIFICATIONS IN CONSTRUCTION PROCEDURE MAY OCCUR AND MAY REQUIRE SOME MINOR ADJUSTMENTS TO BE MADE IN THE FIELD. ALL PROCEDURES MUST BE APPROVED BY THE RESIDENT.

3. THE CONTRACTOR SHALL REMOVE ALL PAVEMENT MARKINGS THAT CONFLICT WITH PROPOSED PAVEMENT MARKINGS IN ACCORDANCE WITH THE SPECIFICATIONS AND MUTCD. PAYMENT SHALL BE MADE UNDER ITEM 627.77 - REMOVING PAVEMENT MARKINGS.

4. EXPOSED BARRIER ENDS SHALL BE PROTECTED BY A WORK ZONE CRASH CUSHION. PAYMENT WILL BE UNDER ITEM 527.341 - WORK ZONE CRASH CUSHION - TL-3.

5. GEOMETRIC INFORMATION FOR TRAFFIC PHASES SHOWN ON THE PLANS WILL BE SUPPLIED TO THE CONTRACTOR AFTER AWARD.

ABBREVIATIONS FOR ALL M.O.T. PLANS

BWLL = BROKEN WHITE LANE LINE
SWLL = SOLID WHITE LANE LINE
SYLL = SOLID YELLOW LANE LINE
TBWLL - TEMPORARY BROKEN WHITE LANE LINE
TSWLL = TEMPORARY SOLID WHITE LANE LINE
TSYLL = TEMPORARY SOLID YELLOW LANE LINE

Date:12/23/2015

Filename: 006_MOT Details.dgn

Scale:

No.	Revision	By	Date

Designed by:

HNTB

CONSULTANT PROJECT MANAGER: Dale A. Mitchell, P.E.

	By	Date		By	Date
Designed	LZD	11/15	Checked	DAM	11/15
Drawn	SLR	11/15	In Charge of	RAL	11/15

HNTB CORPORATION
340 County Road, Suite 6-C
Westbrook, ME 04092
TEL (207) 774-5155
FAX (207) 228-0909

MAINE TURNPIKE

THE GOLD STAR MEMORIAL HIGHWAY

MTA PROJECT MANAGER: Ralph C. Norwood, IV, P.E., P.T.O.E.

BRIDGE SUPERSTRUCTURE REPLACEMENT
SMALL ROAD UNDERPASS

MAINTENANCE OF TRAFFIC DETAILS 1

SHEET NUMBER: MT-02

CONTRACT:2016.03

CONSTRUCTION SIGN SUMMARY

IDENTIFICATION NUMBER	SIZE OF SIGN WIDTH	SIZE OF SIGN HEIGHT	TEXT	TEXT DIMENSIONS (INCHES) LETTER HEIGHT	TEXT DIMENSIONS (INCHES) VERTICAL SPACING	TEXT DIMENSIONS (INCHES) ARROW RTE. MKR.	NUMBER OF SIGNS REQUIRED	COLOR BACK-GROUND	COLOR LEGEND BORDER	BORDER RADIUS	AREA IN SQUARE FEET	NOTES
CS-3	48"	48"	EXPECT STOPPED TRAFFIC	6" 6" 6"	4" 4"		4	ORANGE	BLACK		16.00 (64)	
CS-25	30"	12"	#1-51 SMALL ROAD	5"C			5				2.50 (12.5)	
CS-26	30"	12"	#52-224 SMALL ROAD	5"C			6				2.50 (15.0)	
CS-28	60"	36"	SMALL ROAD BRIDGE OUT OVER TURNPIKE USE DETOUR	5"C 5"C 5"C 5"C	4" 4" 4"		7				15.00 (105)	
G20-2	48"	24"	END ROAD WORK	TEXT DIMENSIONS SHALL CONFORM TO "STANDARD HIGHWAY SIGNS" - 2004			8				8.00 (64)	
G20-5aP	48"	24"	WORK ZONE				4				8.00 (32)	
M4-8a	24"	18"	END DETOUR				2				3.00 (6)	

IDENTIFICATION NUMBER	SIZE OF SIGN WIDTH	SIZE OF SIGN HEIGHT	TEXT	TEXT DIMENSIONS (INCHES) LETTER HEIGHT	TEXT DIMENSIONS (INCHES) VERTICAL SPACING	TEXT DIMENSIONS (INCHES) ARROW RTE. MKR.	NUMBER OF SIGNS REQUIRED	COLOR BACK-GROUND	COLOR LEGEND BORDER	BORDER RADIUS	AREA IN SQUARE FEET	NOTES
M4-9	30"	24"	DETOUR ↑	TEXT DIMENSIONS SHALL CONFORM TO "STANDARD HIGHWAY SIGNS" - 2004			4	ORANGE	BLACK		5.00 (20)	
M4-9L	30"	24"	DETOUR ←				3				5.00 (15)	
M4-9R	30"	24"	DETOUR →				4				5.00 (20)	
M4-10R M4-10L	48"	18"	DETOUR R-SHOWN, L-OPPOSITE				1 L 1 R				6.00 (6) (6)	
R2-1 (50)	48"	60"	SPEED LIMIT XX				4	WHITE	BLACK		20.00 (80)	
R2-6aP	48"	24"	FINES DOUBLE				4				8.00 (32)	
R2-12	36"	54"	END WORK ZONE SPEED LIMIT				4				13.50 (54)	
R11-2	48"	30"	ROAD CLOSED				2				10.00 (20)	
R11-3b (0.3) (0.8)	60"	30"	BRIDGE OUT 00 MILES AHEAD LOCAL TRAFFIC ONLY				1 1				12.50 (12.5) (12.5)	

Date:12/23/2015

Filename: 007_MOT Sign Summary 01.dgn

Scale:

No.	Revision	By	Date

Designed by:

HNTB

CONSULTANT PROJECT MANAGER: Dale A. Mitchell, P.E.

	By	Date		By	Date
Designed	LZD	11/15	Checked	DAM	11/15
Drawn	SLR	11/15	In Charge of	RAL	11/15

HNTB CORPORATION
340 County Road, Suite 6-C
Westbrook, ME 04092
TEL (207) 774-5155
FAX (207) 228-0909

MAINE TURNPIKE

THE GOLD STAR MEMORIAL HIGHWAY

MTA PROJECT MANAGER: Ralph C. Norwood, IV, P.E., P.T.O.E.

BRIDGE SUPERSTRUCTURE REPLACEMENT
SMALL ROAD UNDERPASS

MAINTENANCE OF TRAFFIC
SIGN SUMMARY 1

SHEET NUMBER: MT-03

CONTRACT:2016.03

CONSTRUCTION SIGN SUMMARY (CONTINUED)

IDENTIFICATION NUMBER	SIZE OF SIGN WIDTH	SIZE OF SIGN HEIGHT	TEXT	TEXT DIMENSIONS (INCHES) LETTER HEIGHT	TEXT DIMENSIONS (INCHES) VERTICAL SPACING	TEXT DIMENSIONS (INCHES) ARROW RTE. MKR.	NUMBER OF SIGNS REQUIRED	COLOR BACK-GROUND	COLOR LEGEND BORDER	BORDER RADIUS	AREA IN SQUARE FEET	NOTES
W3-4	48"	48"	BE PREPARED TO STOP	TEXT DIMENSIONS SHALL CONFORM TO "STANDARD HIGHWAY SIGNS" - 2004			4	ORANGE	BLACK		16.00 (64)	
W3-5 (50)	48"	48"	SPEED LIMIT XX				4				16.00 (64)	
W4-2L	48"	48"					4				16.00 (64)	
W4-2R	48"	48"					4				16.00 (64)	
W7-3aP	36"	30"	NEXT X FEET				1				7.5 (7.5)	
W20-1 (1 MILE)	48"	48"	ROAD WORK XXXX				4				16.00 (64)	
W20-1 (AHEAD)	36"	36"	ROAD WORK XXXX				6				9.00 (54)	
W20-3 (500 FT) (1000 FT)	36"	36"	ROAD CLOSED XXXX				2 2				9.00 (18) 9.00 (18)	

IDENTIFICATION NUMBER	SIZE OF SIGN WIDTH	SIZE OF SIGN HEIGHT	TEXT	TEXT DIMENSIONS (INCHES) LETTER HEIGHT	TEXT DIMENSIONS (INCHES) VERTICAL SPACING	TEXT DIMENSIONS (INCHES) ARROW RTE. MKR.	NUMBER OF SIGNS REQUIRED	COLOR BACK-GROUND	COLOR LEGEND BORDER	BORDER RADIUS	AREA IN SQUARE FEET	NOTES
W20-5L (1/2 MILE)	48"	48"	LEFT LANE CLOSED XXXX	TEXT DIMENSIONS SHALL CONFORM TO "STANDARD HIGHWAY SIGNS" - 2004			4	ORANGE	BLACK		16.00 (64)	
W20-5R (1/2 MILE)	48"	48"	RIGHT LANE CLOSED XXXX				4				16.00 (64)	
W21-5	48"	48"	SHOULDER WORK				2				16.00 (32)	
W20-4	36"	36"	ONE LANE ROAD AHEAD				2				9.00 (18)	
W20-7	36"	36"					2				9.00 (18)	
W21-5aR	48"	48"	RIGHT SHOULDER CLOSED				1				16.00 (16)	
W21-5bR	48"	48"	RIGHT SHOULDER CLOSED 1000 FT				1				16.00 (16)	

Date:12/23/2015

Filename: 008_MOT Sign Summary 02.dgn

Scale:

No.	Revision	By	Date

Designed by:

HNTB

CONSULTANT PROJECT MANAGER: Dale A. Mitchell, P.E.

	By	Date		By	Date
Designed	LZD	11/15	Checked	DAM	11/15
Drawn	SLR	11/15	In Charge of	RAL	11/15

HNTB CORPORATION
340 County Road, Suite 6-C
Westbrook, ME 04092
TEL (207) 774-5155
FAX (207) 228-0909

MAINE TURNPIKE

THE GOLD STAR MEMORIAL HIGHWAY

MTA PROJECT MANAGER: Ralph C. Norwood, IV, P.E., P.T.O.E.

BRIDGE SUPERSTRUCTURE REPLACEMENT
SMALL ROAD UNDERPASS

MAINTENANCE OF TRAFFIC
SIGN SUMMARY 2

SHEET NUMBER: MT-04

CONTRACT:2016.03

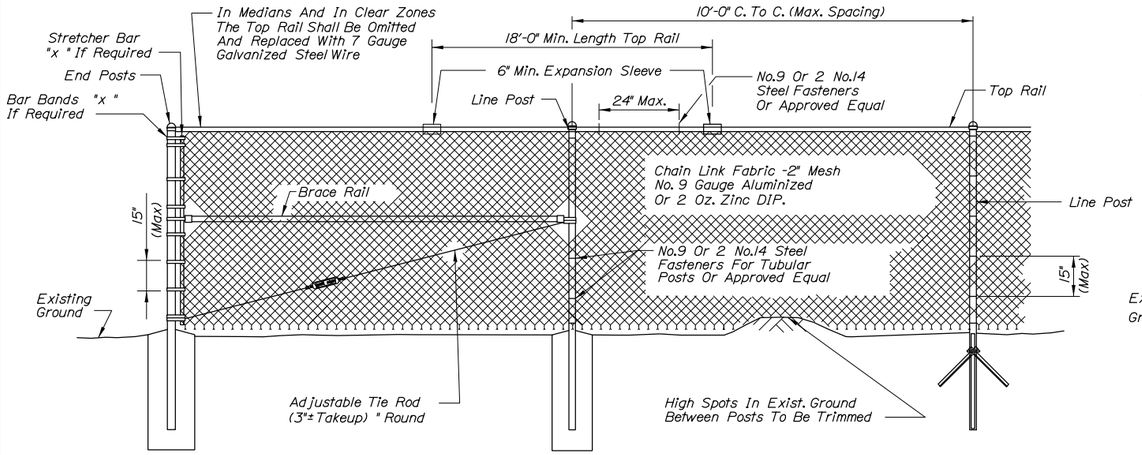

TYPICAL TYPE I END PANEL
N.T.S.

TYPICAL INTERMEDIATE PANEL
N.T.S.

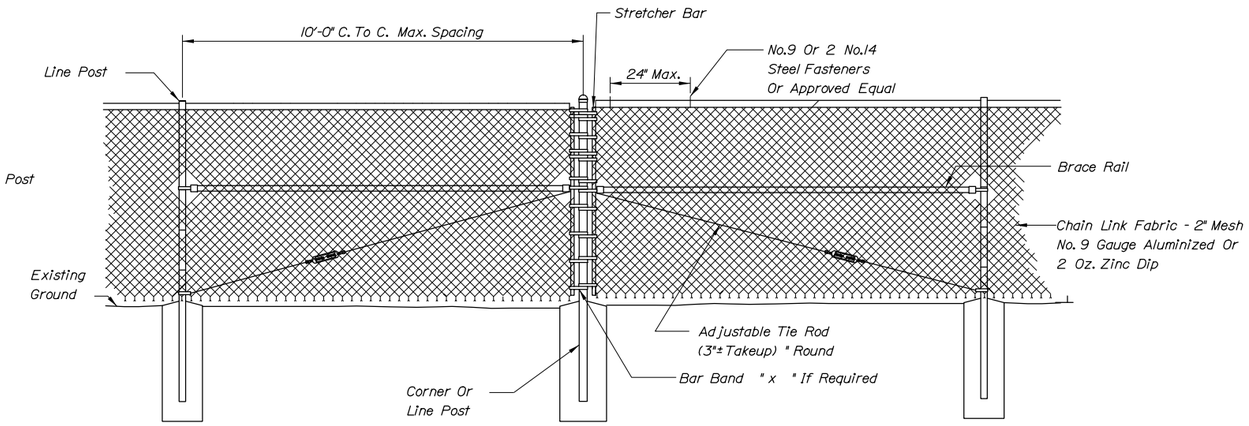

TYPICAL TYPE II BRACE PANEL
N.T.S.

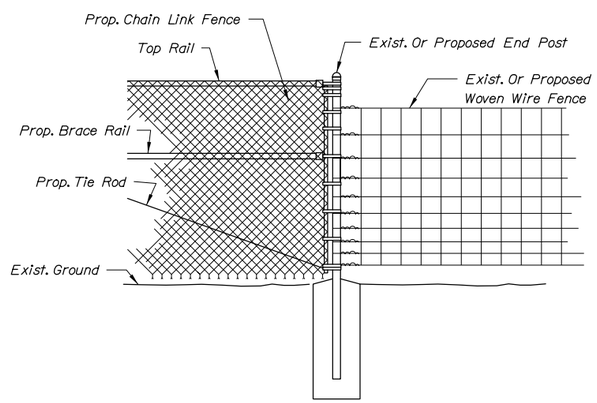

METHOD OF ATTACHING CHAIN LINK FENCE TO WOVEN WIRE FENCE
N.T.S.

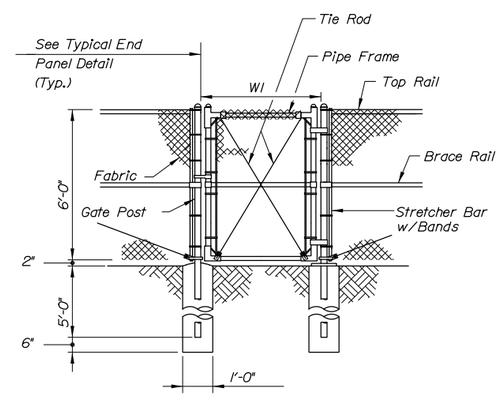

SINGLE GATE

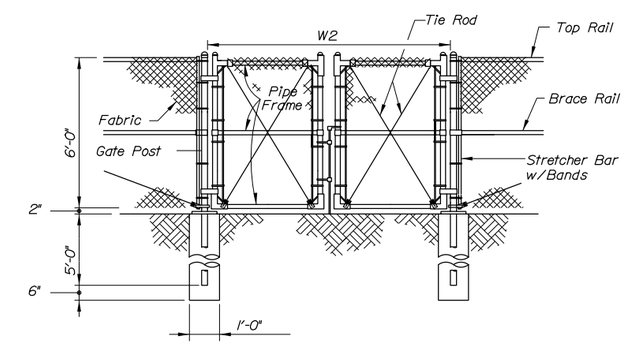

DOUBLE GATE

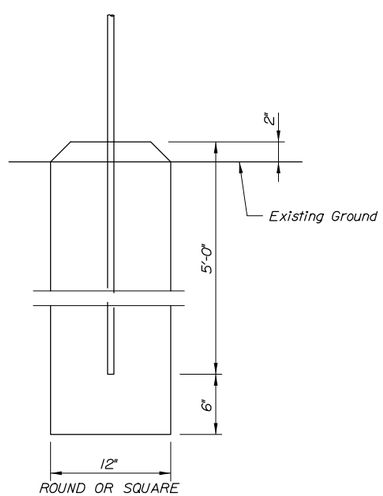

BRACE, GATE AND END POST BASE DETAIL
N.T.S.

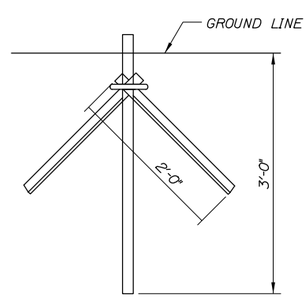

LINE POST DRIVE ANCHOR DETAIL
N.T.S.

Gate Width		Gate Post O.D.
W1	W2	
to 6'	to 12'	3"
6' to 12'	12' to 24'	4"
12' to 18'	24' to 36'	6"

BENDING MOMENTS BASED ON GRADE 1 (SCHEDULE 40 STEEL)

CHAIN LINK FENCE	SHAPE	NOMINAL SIZE (INCHES)	BENDING MOMENT* (LBS.-IN.)
END & CORNER POSTS	ø	2 I.D.	14,025
LINE POSTS	ø	1-1/2 I.D.	8,150
TOP & BRACE RAILS	ø	1-1/4 I.D.	5,875

* MATERIAL FOR GRADE 2 END, CORNER & LINE POSTS AND TOP & BRACE RAILS MUST MEET OR EXCEED BENDING MOMENTS FOR GRADE 1 STEEL AS NOTED ABOVE.

NOTES:

1. BRACE PANELS SHALL BE INSTALLED WHERE THE CHANGE IN GRADE BETWEEN ANY THREE POSTS EXCEEDS 15 PERCENT.
2. NO ADDITIONAL PAYMENT WILL BE MADE FOR LONGER POSTS NECESSITATED BY LARGE GRADE DIFFERENTIAL.
3. TYPE I BRACING WILL BE USED AT FENCE ENDS. TYPE II BRACING WILL BE USED AT CORNER POSTS.
4. WHEN LEDGE IS ENCOUNTERED, STEEL POSTS SHALL BE SET AND GROUTED 12" DEEP UNLESS THE POSTS PENETRATE THE GROUND TO THE DEPTH INDICATED ON THE DRAWINGS.
5. CONCRETE FOR POST FOUNDATION SHALL BE CLASS B.
6. BRACE, GATE AND END POSTS SHALL BE SET IN CONCRETE.
7. CHAIN LINK FENCE SHALL BE INSTALLED WITH BARBS DOWN.
8. ALL COMPONENTS OF CHAIN LINK FENCE SHALL BE IN ACCORDANCE WITH AASHTO M181.

Scale:

No.	Revision	By	Date

Designed by:

HNTB

CONSULTANT PROJECT MANAGER: Dale A. Mitchell, P.E.

	By	Date		By	Date
Designed	LZD	11/15	Checked	DAM	11/15
Drawn	SLR	11/15	In Charge of	RAL	11/15

HNTB CORPORATION
340 County Road, Suite 6-C
Westbrook, ME 04092
TEL (207) 774-5155
FAX (207) 228-0909

MAINE TURNPIKE

THE GOLD STAR MEMORIAL HIGHWAY

MTA PROJECT MANAGER: Ralph C. Norwood IV, P.E., P.T.O.E.

BRIDGE SUPERSTRUCTURE REPLACEMENT
SMALL ROAD UNDERPASS

MISCELLANEOUS DETAILS

SHEET NUMBER: MD-01

CONTRACT:2016.03

Date:12/23/2015
Filename: 009 Fence Details.dgn

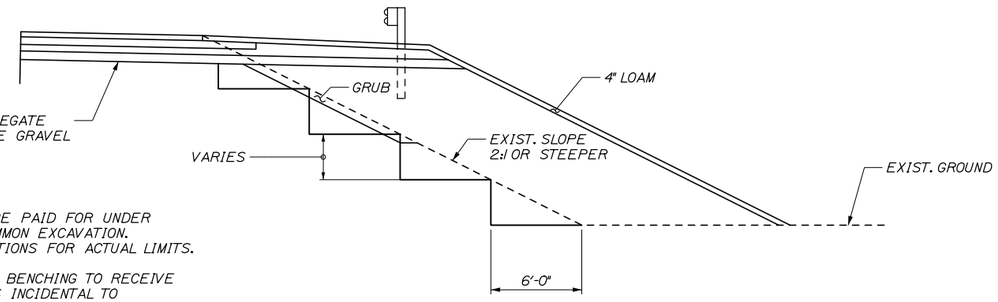

NOTES:

1. GRUBBING WILL BE PAID FOR UNDER ITEM 203.20 COMMON EXCAVATION. SEE CROSS SECTIONS FOR ACTUAL LIMITS.
2. EXCAVATION FOR BENCHING TO RECEIVE EMBANKMENTS IS INCIDENTAL TO ITEM 203.20 COMMON EXCAVATION.
3. BENCHING IS REQUIRED WHERE FILL IS TO BE PLACED ON EXISTING EMBANKMENTS WITH SLOPES 2:1 OR STEEPER.

BENCH DETAIL

N.T.S.

NOTE:
SEE BRIDGE RAIL TRANSITION DETAILS FOR MORE INFORMATION.

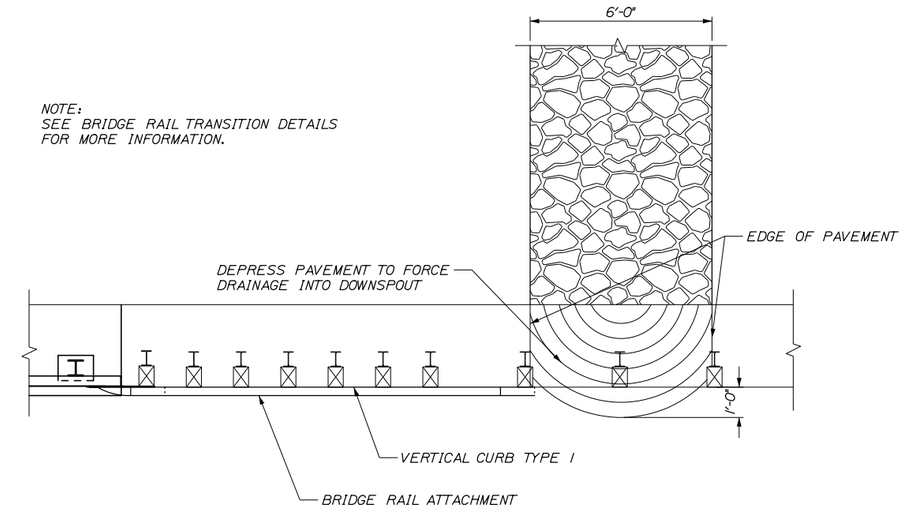

PLAN VIEW

1" = 5'-0"

NOTE:
STONE FOR STONE DOWNSPOUTS SHALL MEET THE REQUIREMENTS OF MDOT SPECIFICATION 703.29, AND WILL BE PAID FOR UNDER ITEM 610.18, STONE DITCH PROTECTION.

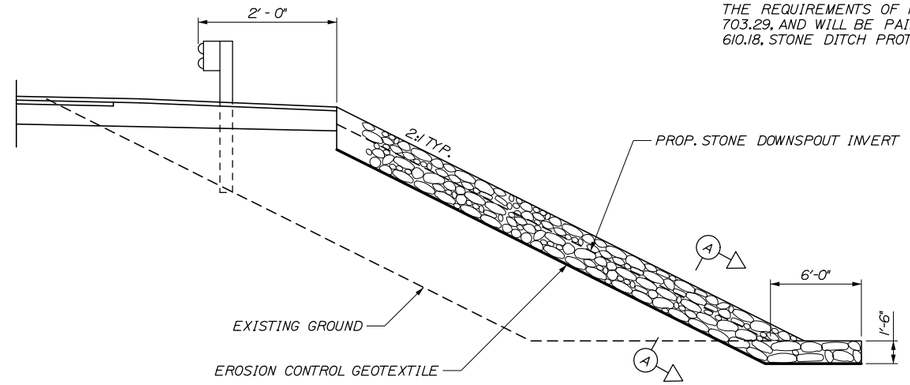

SECTION

NTS

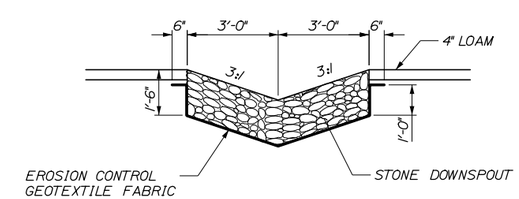

SECTION A-A

1" = 10'-0"

1 LF of Downspout = .33 CY of Stone Ditch Protection
1 LF of Downspout = 1.04 SY of Erosion Control Geotextile Fabric

DOWNSPOUT DETAILS

Date:12/23/2015

Filename: 010_Erosion Control Detail.dgn

Scale:			
No.	Revision	By	Date

Designed by:

HNTB

CONSULTANT PROJECT MANAGER: Dale A. Mitchell, P.E.

	By	Date		By	Date
Designed	LZD	11/15	Checked	DAM	11/15
Drawn	SLR	11/15	In Charge of	RAL	11/15

HNTB CORPORATION
340 County Road, Suite 6-C
Westbrook, ME 04092
TEL (207) 774-5155
FAX (207) 228-0909

MAINE TURNPIKE

THE GOLD STAR MEMORIAL HIGHWAY

MTA PROJECT MANAGER: Ralph C. Norwood IV, P.E., P.T.O.E.

BRIDGE SUPERSTRUCTURE REPLACEMENT
SMALL ROAD UNDERPASS

MISCELLANEOUS DETAILS

SHEET NUMBER: MD-02

CONTRACT:2016.03

Date:12/23/2015

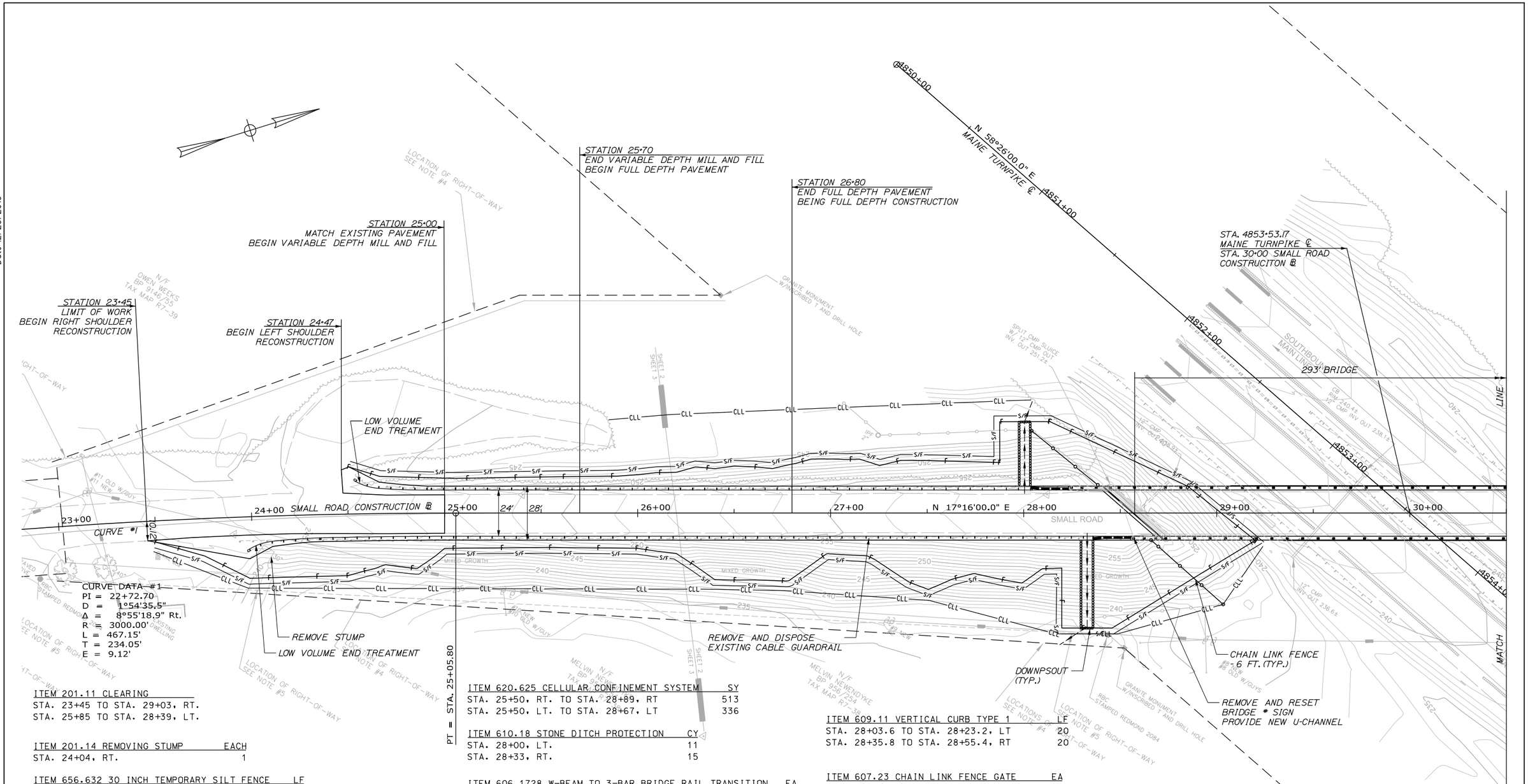

ITEM 201.11 CLEARING
STA. 23+45 TO STA. 29+03, RT.
STA. 25+85 TO STA. 28+39, LT.

ITEM 201.14 REMOVING STUMP — EACH
STA. 24+04, RT. — 1

ITEM 656.632 30 INCH TEMPORARY SILT FENCE — LF
STA. 23+49, RT TO STA. 29+24, RT. — 645
STA. 24+52, LT TO STA. 29+24, RT. — 516

ITEM 606.234 GUARDRAIL TYPE 3C, SINGLE RAIL, 7 FOOT POSTS — LF
STA. 24+35.5 TO STA. 28+35.8, RT. — 400
STA. 24+91.2 TO STA. 28+03.6, LT. — 312.5

ITEM 620.625 CELLULAR CONFINEMENT SYSTEM — SY
STA. 25+50, RT. TO STA. 28+89, RT — 513
STA. 25+50, LT. TO STA. 28+67, LT — 336

ITEM 610.18 STONE DITCH PROTECTION — CY
STA. 28+00, LT. — 11
STA. 28+33, RT. — 15

ITEM 606.1728 W-BEAM TO 3-BAR BRIDGE RAIL TRANSITION — EA
STA. 28+03.6 TO STA. 28+23.2 LT — 1
STA. 28+35.8 TO STA. 28+55.4 RT — 1

ITEM 606.78 LOW VOLUME GUARDRAIL END - TYPE 3 — EA
STA. 24+35.5, RT. — 1
STA. 24+91.2, LT. — 1

ITEM 609.11 VERTICAL CURB TYPE 1 — LF
STA. 28+03.6 TO STA. 28+23.2, LT — 20
STA. 28+35.8 TO STA. 28+55.4, RT — 20

ITEM 607.23 CHAIN LINK FENCE GATE — EA
STA. 28+33, LT — 1

ITEM 607.17 CHAIN LINK FENCE - 6 FOOT — LF
STA. 28+04.1, 42.6' LT. TO STA. 28+38.4, 14.6' LT. — 44
STA. 28+66.0, 14.0' RT. TO STA. 29+03.3, 47.3' RT. — 50

Scale: 25 0 25 50
Scale of Feet

No.	Revision	By	Date

Designed by:

HNTB

CONSULTANT PROJECT MANAGER: Dale A. Mitchell, P.E.

	By	Date		By	Date
Designed	LZD	11/15	Checked	DAM	11/15
Drawn	SLR	11/15	In Charge of	RAL	11/15

HNTB CORPORATION
340 County Road, Suite 6-C
Westbrook, ME 04092
TEL (207) 774-5155
FAX (207) 228-0909

MAINE TURNPIKE

THE GOLD STAR MEMORIAL HIGHWAY

MTA PROJECT MANAGER: Ralph C. Norwood, IV, P.E., P.T.O.E.

BRIDGE SUPERSTRUCTURE REPLACEMENT
SMALL ROAD UNDERPASS

PLAN 1

SHEET NUMBER: GP-01

CONTRACT:2016.03

Filename: 011_PlanSheet.dgn

Date:12/23/2015

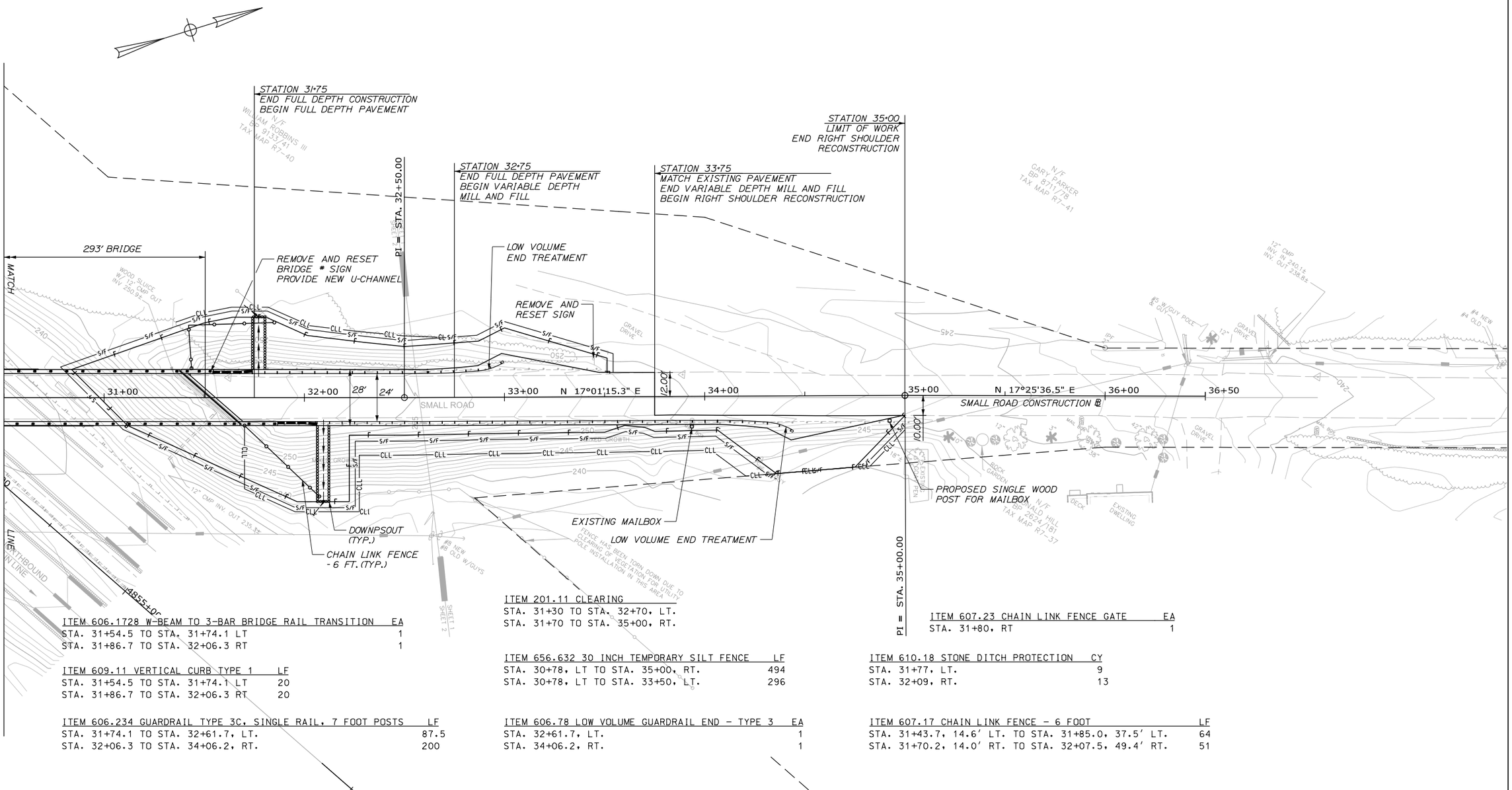

ITEM 606.1728 W-BEAM TO 3-BAR BRIDGE RAIL TRANSITION EA

STA. 31+54.5 TO STA. 31+74.1 LT	1
STA. 31+86.7 TO STA. 32+06.3 RT	1

ITEM 609.11 VERTICAL CURB TYPE 1 LF

STA. 31+54.5 TO STA. 31+74.1 LT	20
STA. 31+86.7 TO STA. 32+06.3 RT	20

ITEM 606.234 GUARDRAIL TYPE 3C, SINGLE RAIL, 7 FOOT POSTS LF

STA. 31+74.1 TO STA. 32+61.7, LT.	87.5
STA. 32+06.3 TO STA. 34+06.2, RT.	200

ITEM 201.11 CLEARING

STA. 31+30 TO STA. 32+70, LT.
STA. 31+70 TO STA. 35+00, RT.

ITEM 656.632 30 INCH TEMPORARY SILT FENCE LF

STA. 30+78, LT TO STA. 35+00, RT.	494
STA. 30+78, LT TO STA. 33+50, LT.	296

ITEM 606.78 LOW VOLUME GUARDRAIL END - TYPE 3 EA

STA. 32+61.7, LT.	1
STA. 34+06.2, RT.	1

ITEM 607.23 CHAIN LINK FENCE GATE EA

STA. 31+80, RT	1

ITEM 610.18 STONE DITCH PROTECTION CY

STA. 31+77, LT.	9
STA. 32+09, RT.	13

ITEM 607.17 CHAIN LINK FENCE - 6 FOOT LF

STA. 31+43.7, 14.6' LT. TO STA. 31+85.0, 37.5' LT.	64
STA. 31+70.2, 14.0' RT. TO STA. 32+07.5, 49.4' RT.	51

Filename: 012_PlanSheet.dgn

Scale: 25 0 25 50
Scale of Feet

No.	Revision	By	Date

Designed by:

HNTB

CONSULTANT PROJECT MANAGER: Dale A. Mitchell, P.E.

	By	Date		By	Date
Designed	LZD	11/15	Checked	DAM	11/15
Drawn	SLR	11/15	In Charge of	RAL	11/15

HNTB CORPORATION
340 County Road, Suite 6-C
Westbrook, ME 04092
TEL (207) 774-5155
FAX (207) 228-0909

MAINE TURNPIKE

THE GOLD STAR MEMORIAL HIGHWAY

MTA PROJECT MANAGER: Ralph C. Norwood, IV, P.E., P.T.O.E.

BRIDGE SUPERSTRUCTURE REPLACEMENT
SMALL ROAD UNDERPASS

PLAN 2

SHEET NUMBER: GP-02

CONTRACT:2016.03

Date:12/23/2015

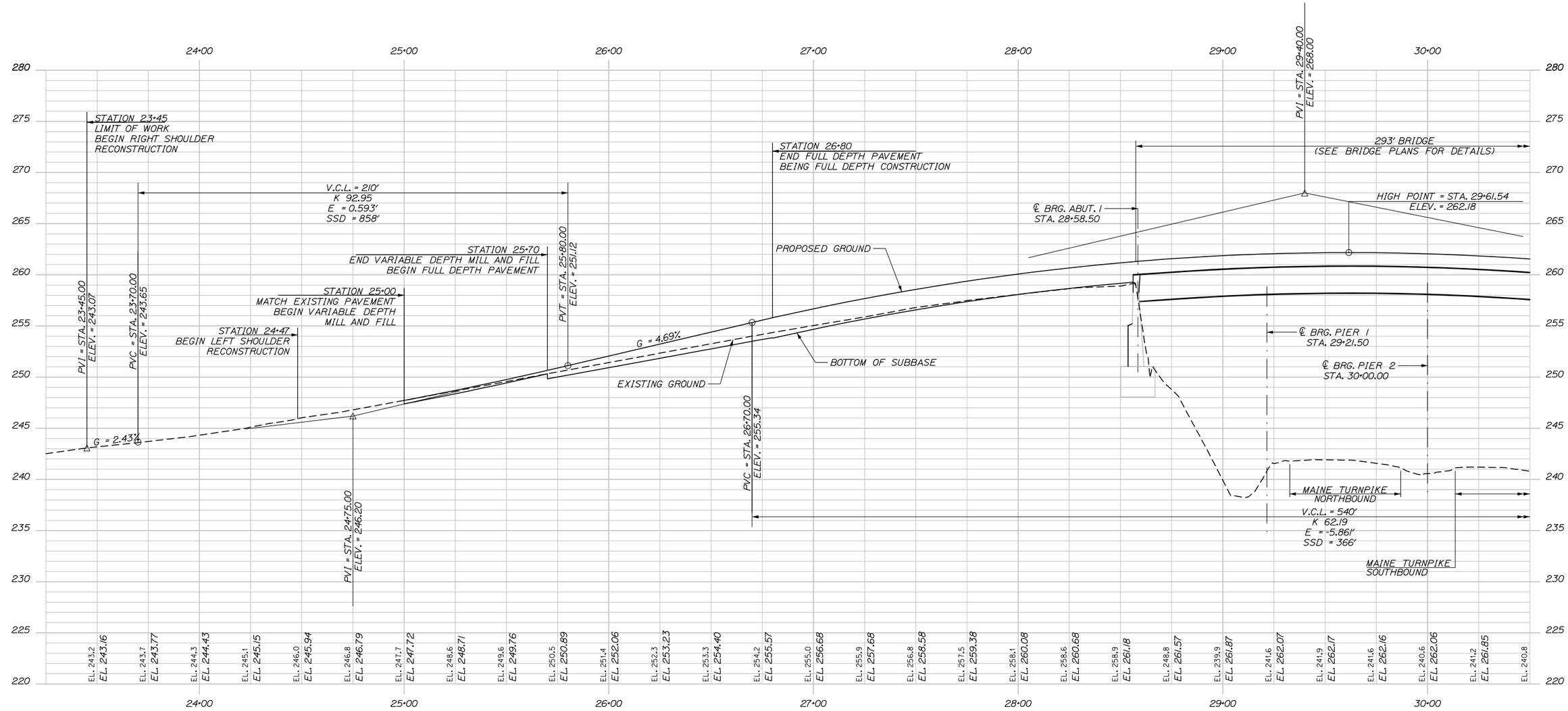

Filename: 013_Profile.dgn

Scale: 25 0 25 50
Scale of Feet

No.	Revision	By	Date

Designed by:

HNTB

CONSULTANT PROJECT MANAGER: Dale A. Mitchell, P.E.

	By	Date		By	Date
Designed	LZD	11/15	Checked	DAM	11/15
Drawn	SLR	11/15	In Charge of	RAL	11/15

HNTB CORPORATION
340 County Road, Suite 6-C
Westbrook, ME 04092
TEL (207) 774-5155
FAX (207) 228-0909

MAINE TURNPIKE

THE GOLD STAR MEMORIAL HIGHWAY

MTA PROJECT MANAGER: Ralph C. Norwood, IV, P.E., P.T.O.E.

BRIDGE SUPERSTRUCTURE REPLACEMENT
SMALL ROAD UNDERPASS

PROFILE 1

SHEET NUMBER: PR-01

CONTRACT:2016.03

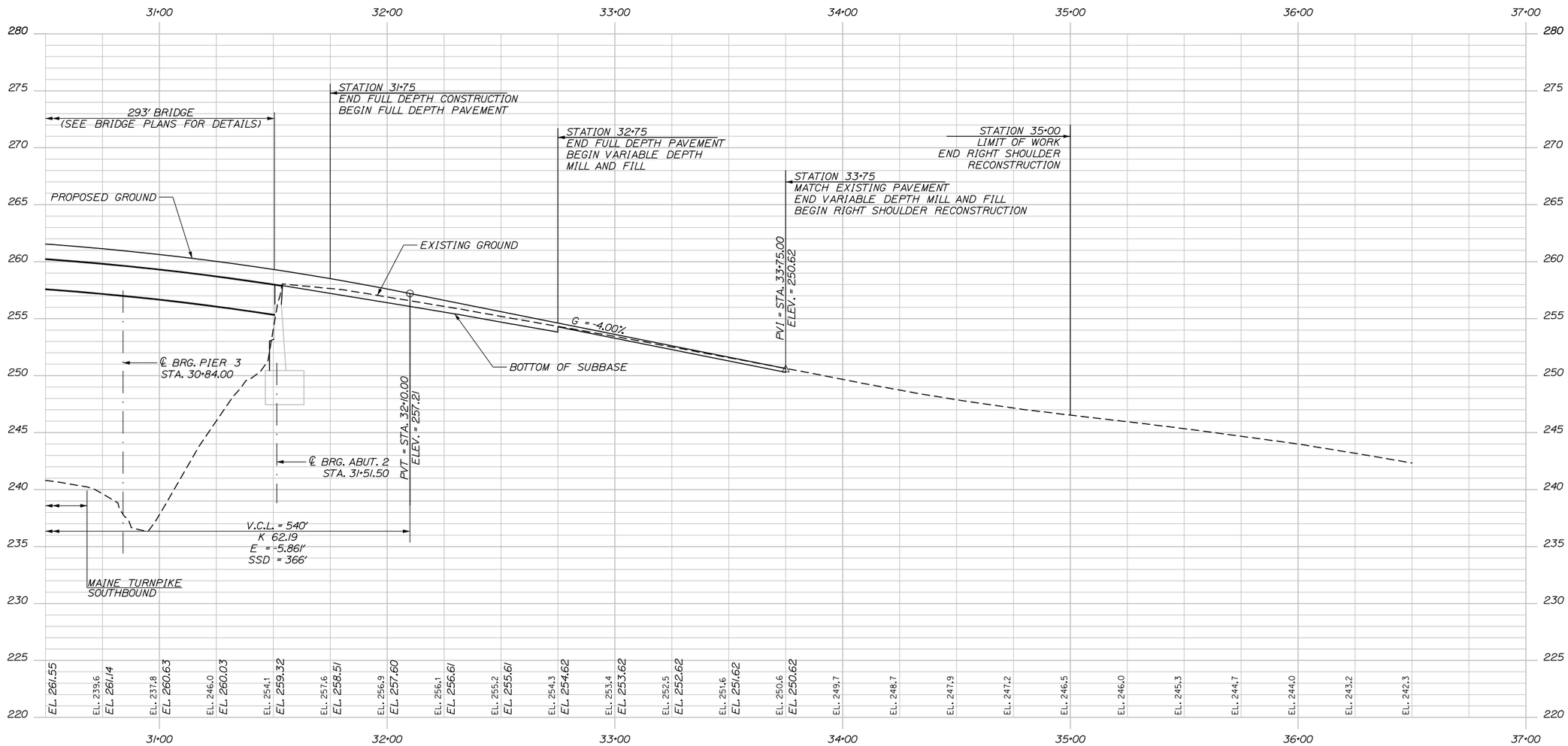

Date:12/23/2015

Filename: 014_Profile.dgn

Scale: 25 0 25 50
Scale of Feet

No.	Revision	By	Date

Designed by:

HNTB

CONSULTANT PROJECT MANAGER: Dale A. Mitchell, P.E.

	By	Date		By	Date
Designed	LZD	11/15	Checked	DAM	11/15
Drawn	SLR	11/15	In Charge of	RAL	11/15

HNTB CORPORATION
340 County Road, Suite 6-C
Westbrook, ME 04092
TEL (207) 774-5155
FAX (207) 228-0909

MAINE TURNPIKE

THE GOLD STAR MEMORIAL HIGHWAY

MTA PROJECT MANAGER: Ralph C. Norwood, IV, P.E., P.T.O.E.

BRIDGE SUPERSTRUCTURE REPLACEMENT
SMALL ROAD UNDERPASS

PROFILE 2

SHEET NUMBER: PR-02

CONTRACT:2016.03

Date:12/23/2015

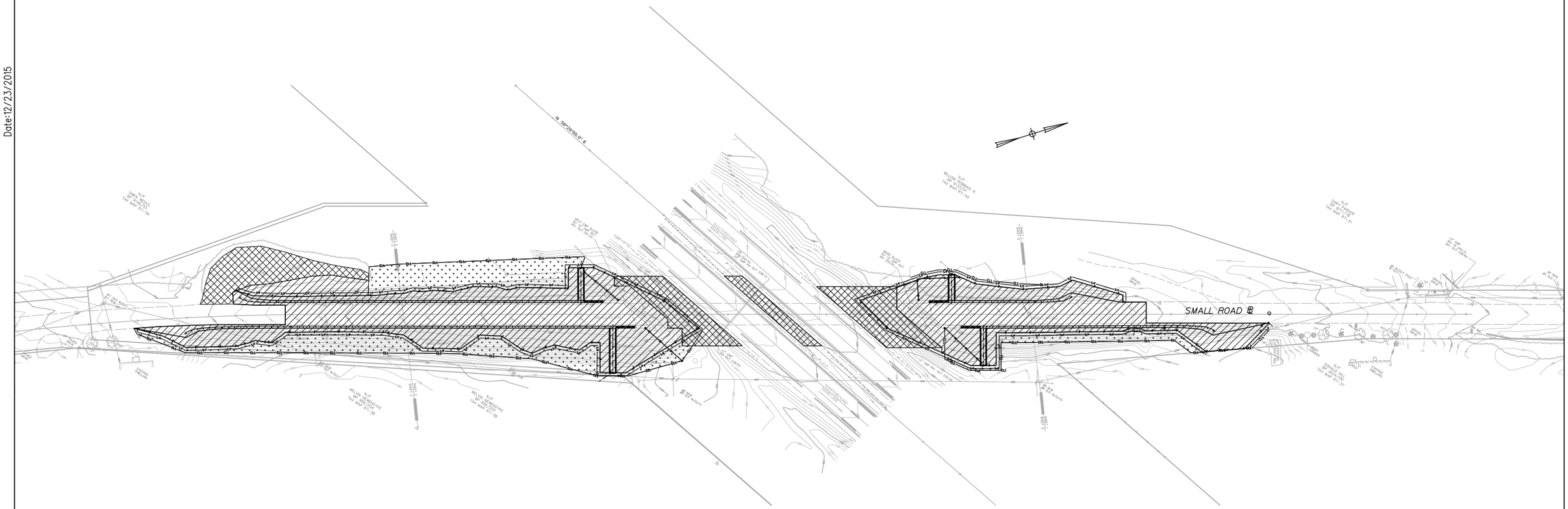

LEGEND

- CONTRACT LIMIT OF DISTURBANCE 42,525 SF (1.0 ACRES)
- CONTRACTOR'S LIMIT OF DISTURBANCE AREA FOR ACCESS AND STORAGE 13,019 SF (0.3 ACRES)
- CONTRACT ADDITIONAL CLEARING 15,324 SF (0.4 ACRES)

NOTES:

1. EROSION AND SEDIMENTATION CONTROL DEVICES REQUIRED FOR THE CONTRACTOR'S ACCESS LOCATIONS AND STORAGE AREAS WILL NOT BE MEASURED FOR PAYMENT.
2. SEE SPECIFICATIONS FOR CONTRACTOR'S SUBMITTAL REQUIREMENTS IF ADDING ADDITIONAL LIMITS OF DISTURBANCE TO THE PROJECT ESTIMATED QUANTITIES.
3. AN ADDITIONAL 0.5 ACRE HAS BEEN ESTIMATED FOR CONTRACTOR ACCESS LOCATIONS AND STORAGE AREAS.
4. TOTAL LIMIT OF DISTURBANCE FOR THIS PROJECT HAS BEEN ESTIMATED TO BE 2.1 ACRES.

Filename: 015_LOD Plan.dgn

Scale:

No.	Revision	By	Date

Designed by:

HNTB

CONSULTANT PROJECT MANAGER: Dale A. Mitchell, P.E.

	By	Date		By	Date
Designed	LZD	11/15	Checked	DAM	11/15
Drawn	SLR	11/15	In Charge of	RAL	11/15

HNTB CORPORATION
340 County Road, Suite 6-C
Westbrook, ME 04092
TEL (207) 774-5155
FAX (207) 228-0909

MAINE TURNPIKE

THE GOLD STAR MEMORIAL HIGHWAY

MTA PROJECT MANAGER: Ralph C. Norwood, IV, P.E., P.T.O.E.

BRIDGE SUPERSTRUCTURE REPLACEMENT
SMALL ROAD UNDERPASS

LIMIT OF DISTURBANCE PLAN

SHEET NUMBER: LOD-01

CONTRACT:2016.03

Date:12/23/2015

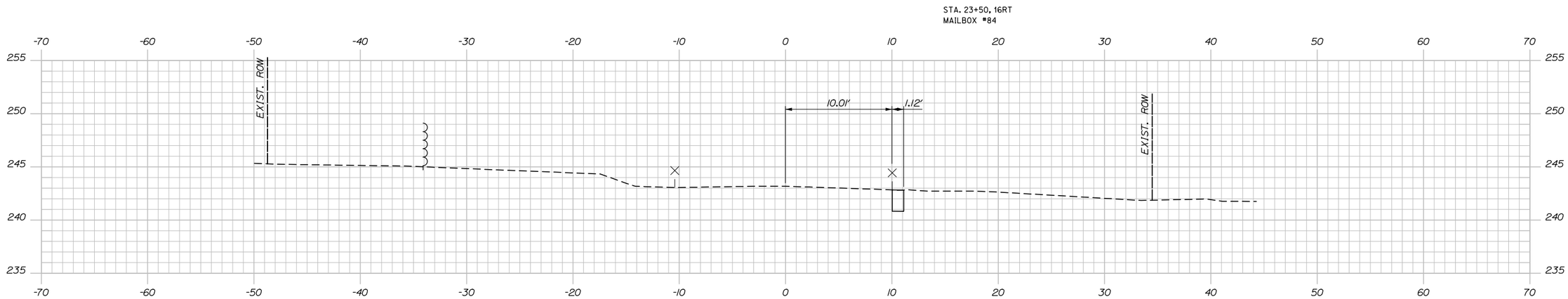

23+50.00

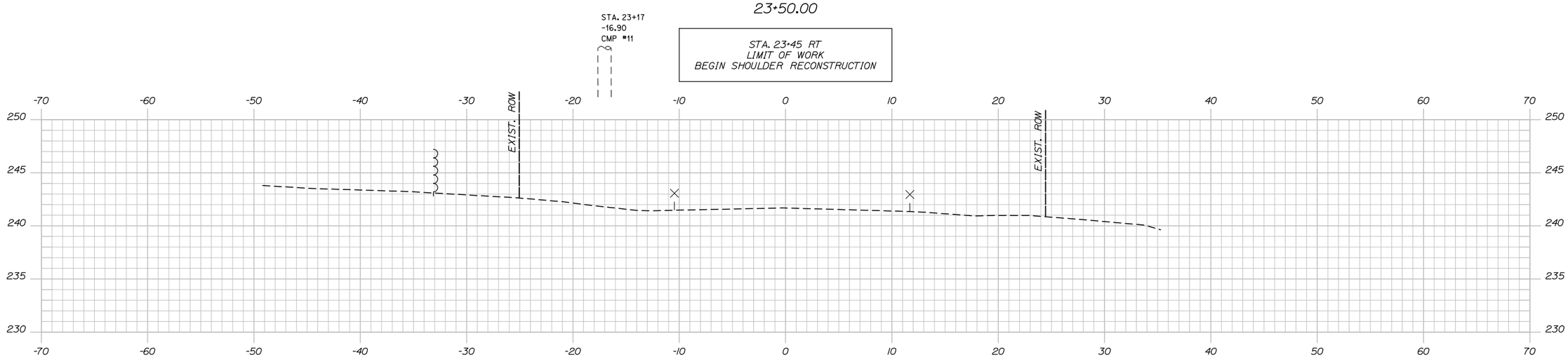

23+00.00

Scale: 5 0 5 10
Scale of Feet

No.	Revision	By	Date

Designed by:

HNTB

CONSULTANT PROJECT MANAGER: Dale A. Mitchell, P.E.

	By	Date		By	Date
Designed	LZD	11/15	Checked	DAM	11/15
Drawn	SLR	11/15	In Charge of	RAL	11/15

HNTB CORPORATION
340 County Road, Suite 6-C
Westbrook, ME 04092
TEL (207) 774-5155
FAX (207) 228-0909

MAINE TURNPIKE

THE GOLD STAR MEMORIAL HIGHWAY

MTA PROJECT MANAGER: Ralph C. Norwood IV, P.E., P.T.O.E.

BRIDGE SUPERSTRUCTURE REPLACEMENT
SMALL ROAD UNDERPASS

STA. 23+00 TO STA. 23+50

SHEET NUMBER: XS-01

CONTRACT:2016.03

Filename: xsecx.dgn

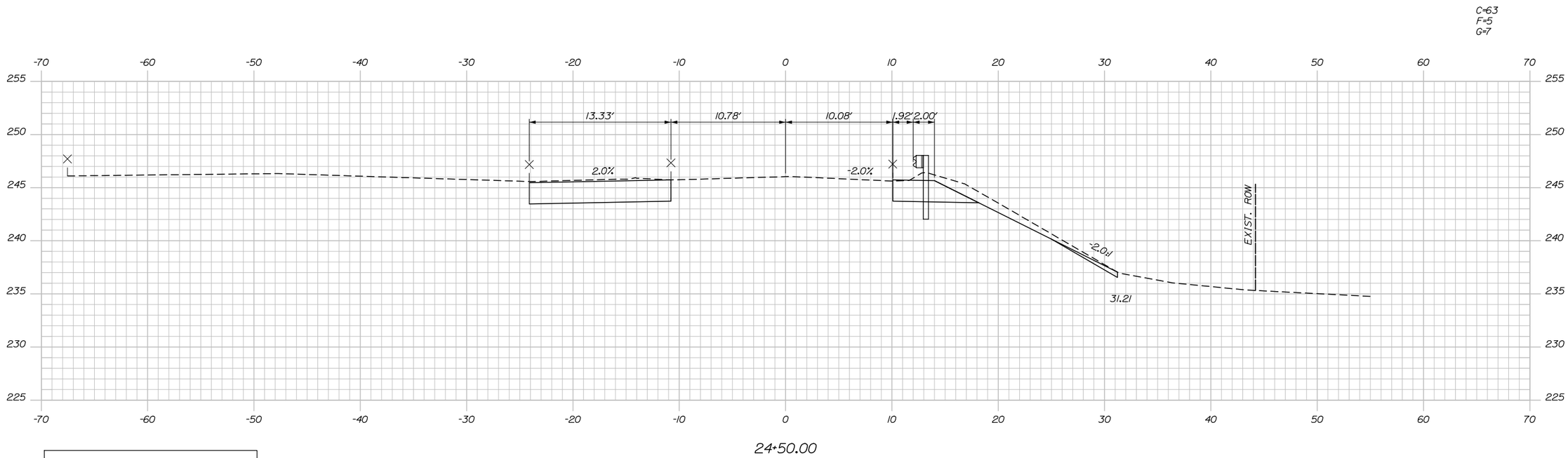

STA. 24+47 LT
BEGIN SHOULDER RECONSTRUCTION

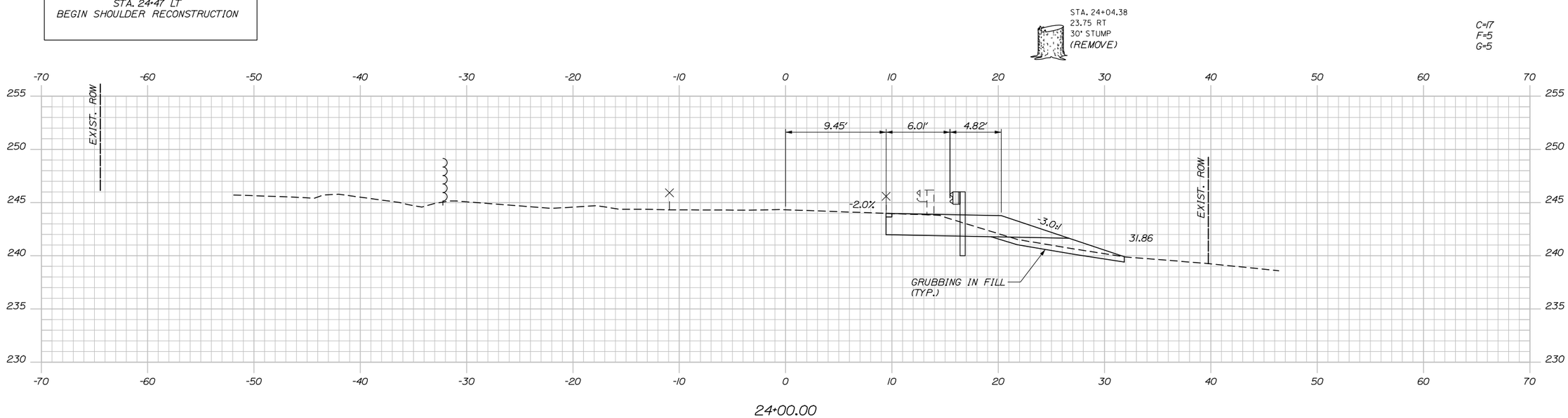

Date:12/23/2015

Filename: xsecx.dgn

Scale: 5 0 5 10
Scale of Feet

No.	Revision	By	Date

Designed by:

HNTB

CONSULTANT PROJECT MANAGER: Dale A. Mitchell, P.E.

	By	Date		By	Date
Designed	LZD	11/15	Checked	DAM	11/15
Drawn	SLR	11/15	In Charge of	RAL	11/15

HNTB CORPORATION
340 County Road, Suite 6-C
Westbrook, ME 04092
TEL (207) 774-5155
FAX (207) 228-0909

MAINE TURNPIKE

THE GOLD STAR MEMORIAL HIGHWAY

MTA PROJECT MANAGER: Ralph C. Norwood IV, P.E., P.T.O.E.

BRIDGE SUPERSTRUCTURE REPLACEMENT
SMALL ROAD UNDERPASS

STA. 24+00 TO STA. 24+50

SHEET NUMBER: XS-02

CONTRACT:2016.03

Date:12/23/2015

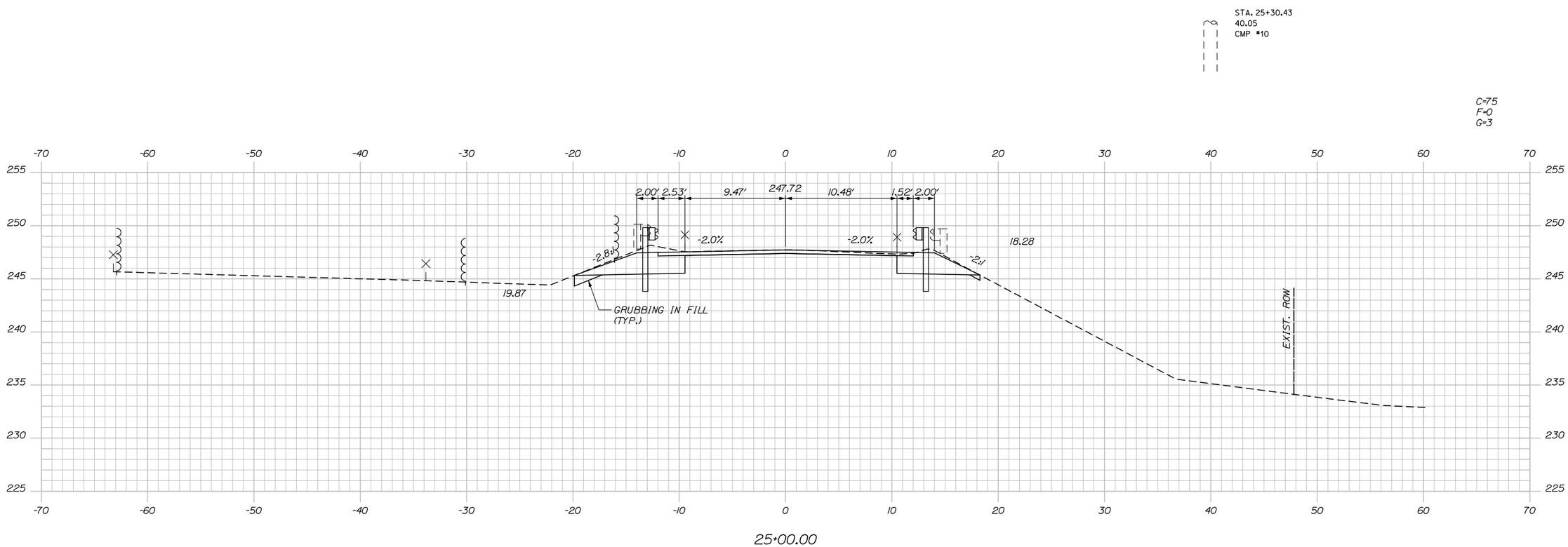

Scale: 5 0 5 10
Scale of Feet

No.	Revision	By	Date

Designed by:

HNTB

CONSULTANT PROJECT MANAGER: Dale A. Mitchell, P.E.

	By	Date		By	Date
Designed	LZD	11/15	Checked	DAM	11/15
Drawn	SLR	11/15	In Charge of	RAL	11/15

HNTB CORPORATION
340 County Road, Suite 6-C
Westbrook, ME 04092
TEL (207) 774-5155
FAX (207) 228-0909

MAINE TURNPIKE

THE GOLD STAR MEMORIAL HIGHWAY

MTA PROJECT MANAGER: Ralph C. Norwood IV, P.E., P.T.O.E.

BRIDGE SUPERSTRUCTURE REPLACEMENT
SMALL ROAD UNDERPASS

STA. 25+00

SHEET NUMBER: XS-03

CONTRACT:2016.03

Filename: xsecx.dgn

Date:12/23/2015

C=51
F=0
G=3

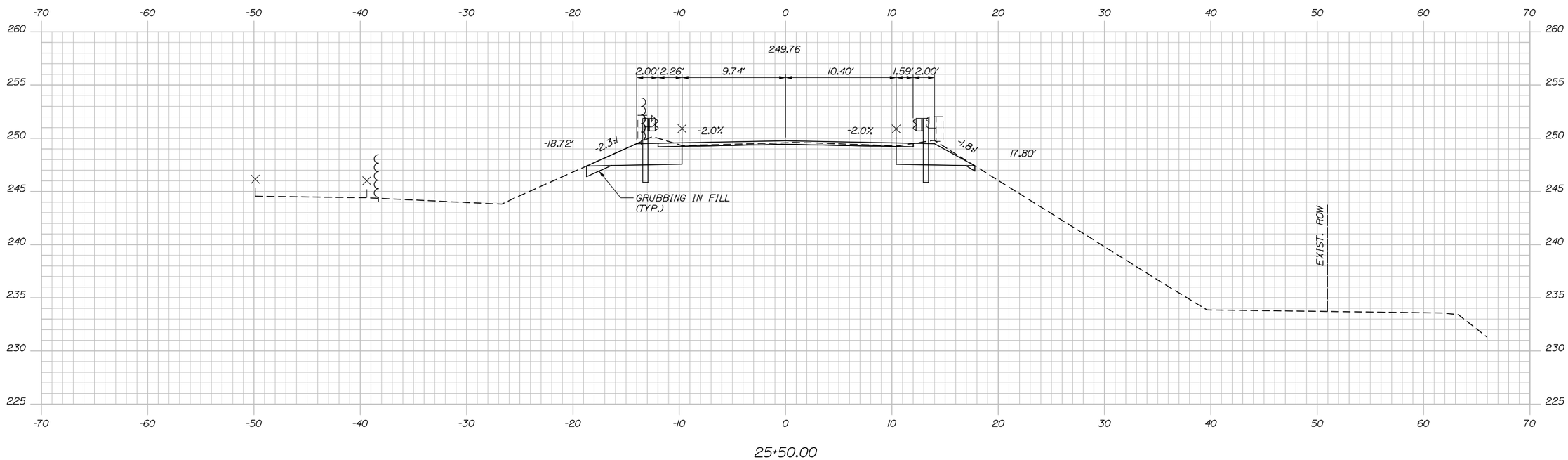

STA. 25+50 LT TO STA. 28+13 LT
INSTALL CELLULAR CONFINMENT SYSTEM
AND TRANSITION TO 1.5:1 SIDESLOPE

STA. 25+50 RT TO STA. 28+46 RT
INSTALL CELLULAR CONFINMENT SYSTEM
AND TRANSITION TO 1.5:1 SIDESLOPE

Scale: 5 0 5 10
Scale of Feet

No.	Revision	By	Date

Designed by:

HNTB

CONSULTANT PROJECT MANAGER: Dale A. Mitchell, P.E.

	By	Date		By	Date
Designed	LZD	11/15	Checked	DAM	11/15
Drawn	SLR	11/15	In Charge of	RAL	11/15

HNTB CORPORATION
340 County Road, Suite 6-C
Westbrook, ME 04092
TEL (207) 774-5155
FAX (207) 228-0909

MAINE TURNPIKE

THE GOLD STAR MEMORIAL HIGHWAY

MTA PROJECT MANAGER: Ralph C. Norwood IV, P.E., P.T.O.E.

BRIDGE SUPERSTRUCTURE REPLACEMENT
SMALL ROAD UNDERPASS

STA. 25+50

SHEET NUMBER: XS-04

CONTRACT:2016.03

Filename: xsecx.dgn

Date:12/23/2015

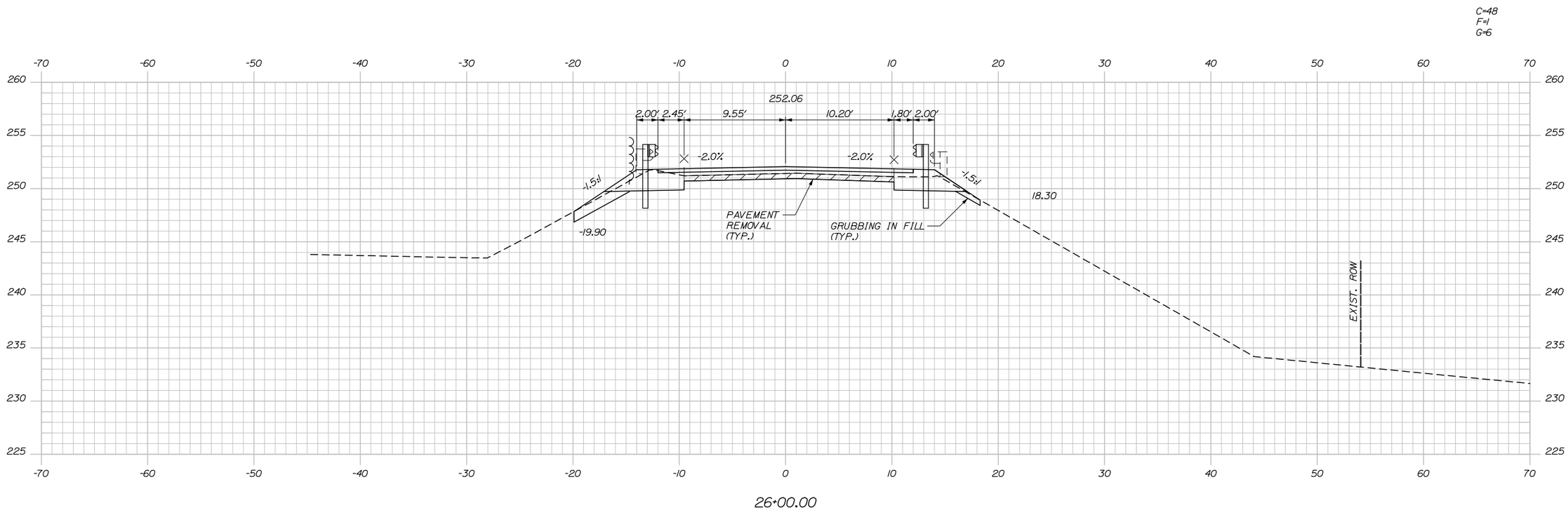

STA. 25+70
END VARIABLE DEPTH MILL AND FILL
BEGIN FULL DEPTH PAVEMENT

Scale: 5 0 5 10
Scale of Feet

No.	Revision	By	Date

Designed by:

HNTB

CONSULTANT PROJECT MANAGER: Dale A. Mitchell, P.E.

	By	Date		By	Date
Designed	LZD	11/15	Checked	DAM	11/15
Drawn	SLR	11/15	In Charge of	RAL	11/15

HNTB CORPORATION
340 County Road, Suite 6-C
Westbrook, ME 04092
TEL (207) 774-5155
FAX (207) 228-0909

MAINE TURNPIKE

THE GOLD STAR MEMORIAL HIGHWAY

MTA PROJECT MANAGER: Ralph C. Norwood IV, P.E., P.T.O.E.

BRIDGE SUPERSTRUCTURE REPLACEMENT
SMALL ROAD UNDERPASS

STA. 26+00

SHEET NUMBER: XS-05

CONTRACT:2016.03

Filename: xsecx.dgn

Date:12/23/2015

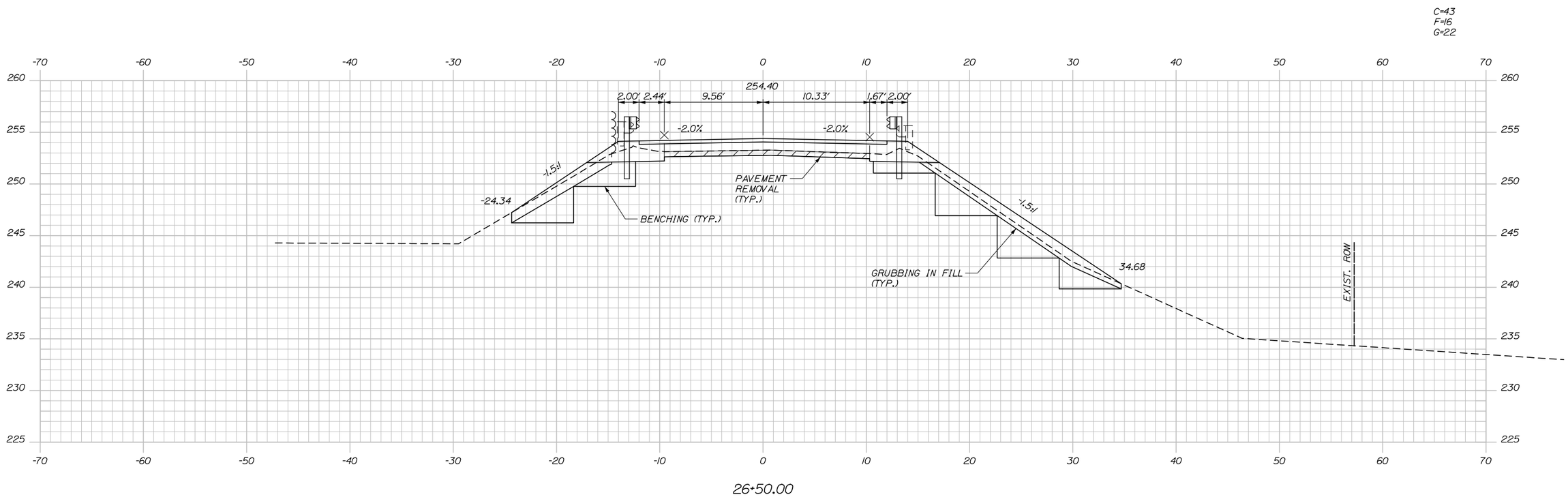

Scale: 5 0 5 10
Scale of Feet

No.	Revision	By	Date

Designed by:

HNTB

CONSULTANT PROJECT MANAGER: Dale A. Mitchell, P.E.

	By	Date		By	Date
Designed	LZD	11/15	Checked	DAM	11/15
Drawn	SLR	11/15	In Charge of	RAL	11/15

HNTB CORPORATION
340 County Road, Suite 6-C
Westbrook, ME 04092
TEL (207) 774-5155
FAX (207) 228-0909

MAINE TURNPIKE

THE GOLD STAR MEMORIAL HIGHWAY

MTA PROJECT MANAGER: Ralph C. Norwood IV, P.E., P.T.O.E.

BRIDGE SUPERSTRUCTURE REPLACEMENT
SMALL ROAD UNDERPASS

STA. 26+50

SHEET NUMBER: XS-06

CONTRACT:2016.03

Filename: xsecx.dgn

Date:12/23/2015

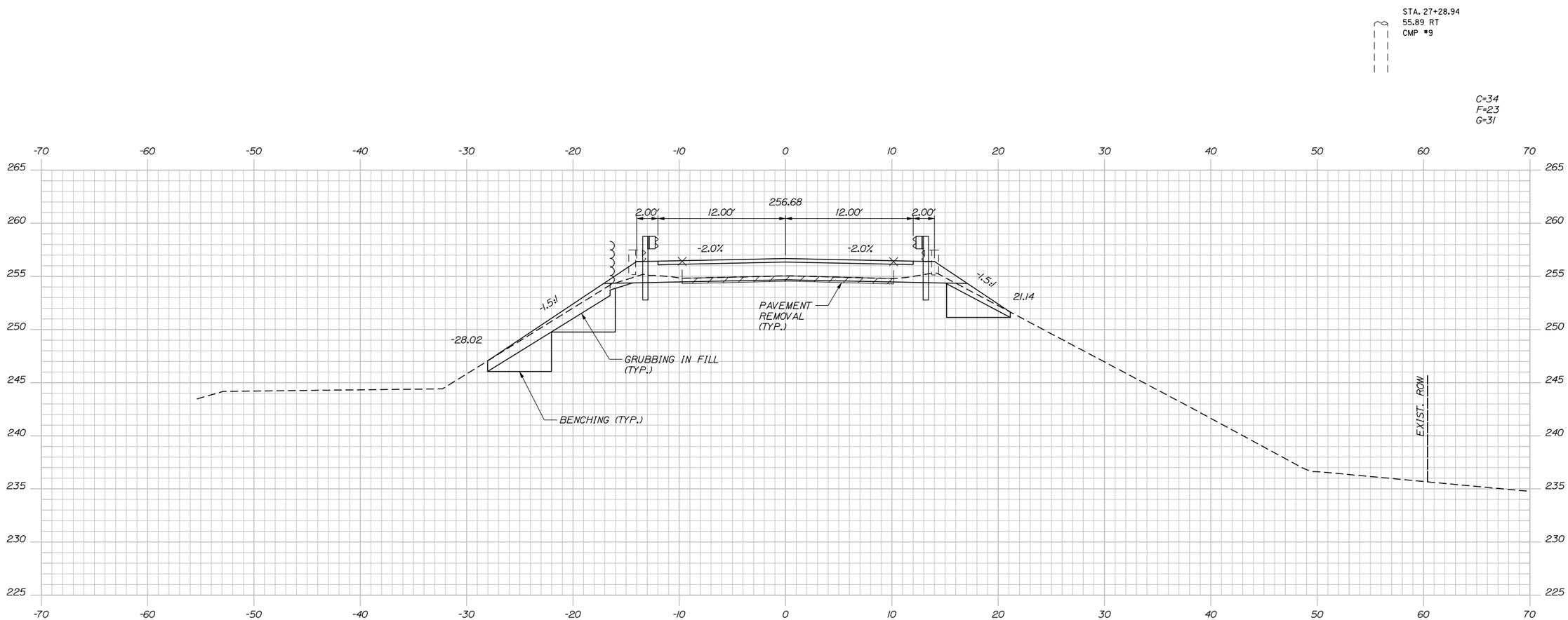

Scale: 5 0 5 10
Scale of Feet

No.	Revision	By	Date

Designed by:

HNTB

CONSULTANT PROJECT MANAGER: Dale A. Mitchell, P.E.

	By	Date		By	Date
Designed	LZD	11/15	Checked	DAM	11/15
Drawn	SLR	11/15	In Charge of	RAL	11/15

HNTB CORPORATION
340 County Road, Suite 6-C
Westbrook, ME 04092
TEL (207) 774-5155
FAX (207) 228-0909

MAINE TURNPIKE

THE GOLD STAR MEMORIAL HIGHWAY

MTA PROJECT MANAGER: Ralph C. Norwood IV, P.E., P.T.O.E.

BRIDGE SUPERSTRUCTURE REPLACEMENT
SMALL ROAD UNDERPASS

STA. 27+00

SHEET NUMBER: XS-07

CONTRACT:2016.03

Filename: xsecx.dgn

Date:12/23/2015

C=26
F=37
G=38

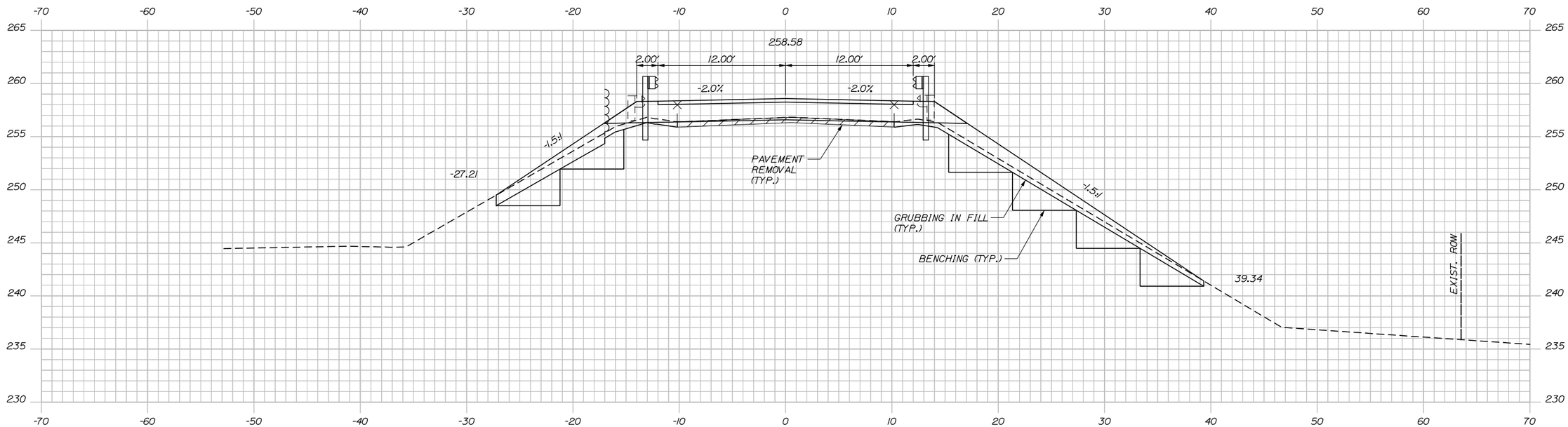

27+50.00

Scale: 5 0 5 10
Scale of Feet

No.	Revision	By	Date

Designed by:

HNTB

CONSULTANT PROJECT MANAGER: Dale A. Mitchell, P.E.

	By	Date		By	Date
Designed	LZD	11/15	Checked	DAM	11/15
Drawn	SLR	11/15	In Charge of	RAL	11/15

HNTB CORPORATION
340 County Road, Suite 6-C
Westbrook, ME 04092
TEL (207) 774-5155
FAX (207) 228-0909

MAINE TURNPIKE

THE GOLD STAR MEMORIAL HIGHWAY

MTA PROJECT MANAGER: Ralph C. Norwood IV, P.E., P.T.O.E.

BRIDGE SUPERSTRUCTURE REPLACEMENT
SMALL ROAD UNDERPASS

STA. 27+50

SHEET NUMBER: XS-08

CONTRACT:2016.03

Filename: xsecx.dgn

Date:12/23/2015

C=21
F=60
G=38

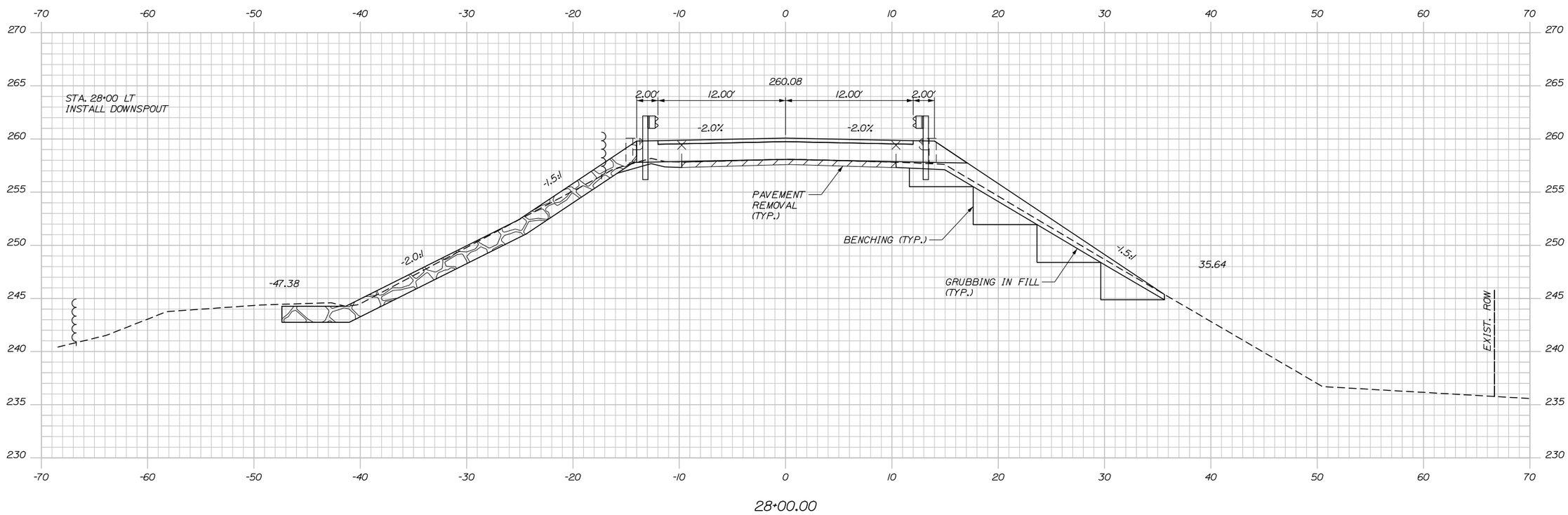

Scale: 5 0 5 10
Scale of Feet

No.	Revision	By	Date

Designed by:

HNTB

CONSULTANT PROJECT MANAGER: Dale A. Mitchell, P.E.

	By	Date		By	Date
Designed	LZD	11/15	Checked	DAM	11/15
Drawn	SLR	11/15	In Charge of	RAL	11/15

HNTB CORPORATION
340 County Road, Suite 6-C
Westbrook, ME 04092
TEL (207) 774-5155
FAX (207) 228-0909

MAINE TURNPIKE

THE GOLD STAR MEMORIAL HIGHWAY

MTA PROJECT MANAGER: Ralph C. Norwood IV, P.E., P.T.O.E.

BRIDGE SUPERSTRUCTURE REPLACEMENT
SMALL ROAD UNDERPASS

STA. 28+00

SHEET NUMBER: XS-09

CONTRACT:2016.03

Filename: xsecx.dgn

Date:12/23/2015

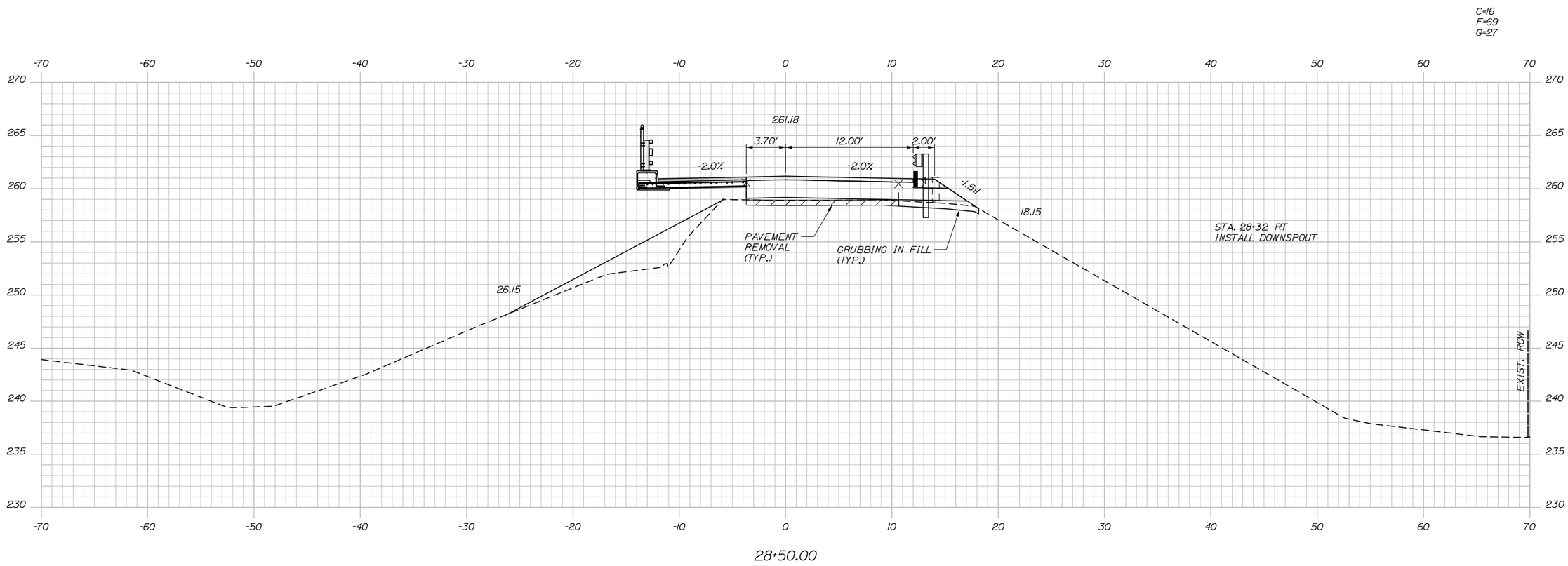

Scale: 5 0 5 10
Scale of Feet

No.	Revision	By	Date

Designed by:

HNTB

CONSULTANT PROJECT MANAGER: Dale A. Mitchell, P.E.

	By	Date		By	Date
Designed	LZD	11/15	Checked	DAM	11/15
Drawn	SLR	11/15	In Charge of	RAL	11/15

HNTB CORPORATION
340 County Road, Suite 6-C
Westbrook, ME 04092
TEL (207) 774-5155
FAX (207) 228-0909

MAINE TURNPIKE

THE GOLD STAR MEMORIAL HIGHWAY

MTA PROJECT MANAGER: Ralph C. Norwood IV, P.E., P.T.O.E.

BRIDGE SUPERSTRUCTURE REPLACEMENT
SMALL ROAD UNDERPASS

STA. 28+50

SHEET NUMBER: XS-10

CONTRACT:2016.03

Filename: xsecx.dgn

Date:12/23/2015

STA. 28+94.19
65.67 RT
CMP #8

C=2
F=14
G=5

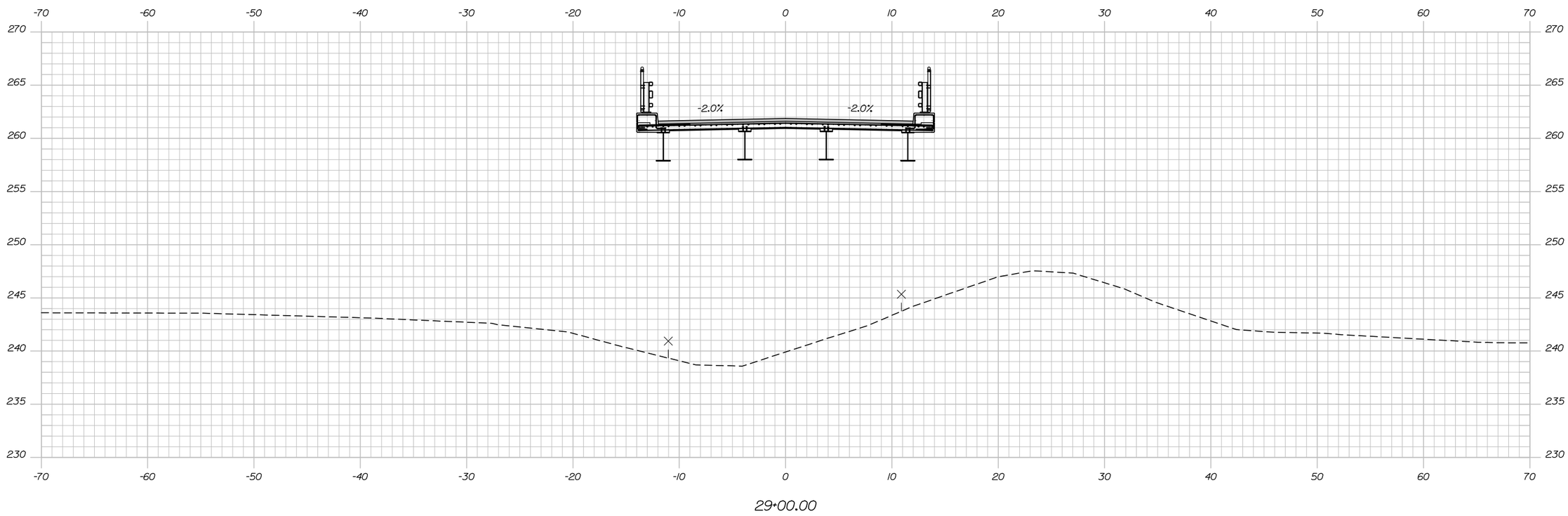

Scale: 5 0 5 10
Scale of Feet

No.	Revision	By	Date

Designed by:

HNTB

CONSULTANT PROJECT MANAGER: Dale A. Mitchell, P.E.

	By	Date		By	Date
Designed	LZD	11/15	Checked	DAM	11/15
Drawn	SLR	11/15	In Charge of	RAL	11/15

HNTB CORPORATION
340 County Road, Suite 6-C
Westbrook, ME 04092
TEL (207) 774-5155
FAX (207) 228-0909

MAINE TURNPIKE

THE GOLD STAR MEMORIAL HIGHWAY

MTA PROJECT MANAGER: Ralph C. Norwood IV, P.E., P.T.O.E.

BRIDGE SUPERSTRUCTURE REPLACEMENT
SMALL ROAD UNDERPASS

STA. 29+00

SHEET NUMBER: XS-11

CONTRACT:2016.03

Filename: xsecx.dgn

Date:12/23/2015

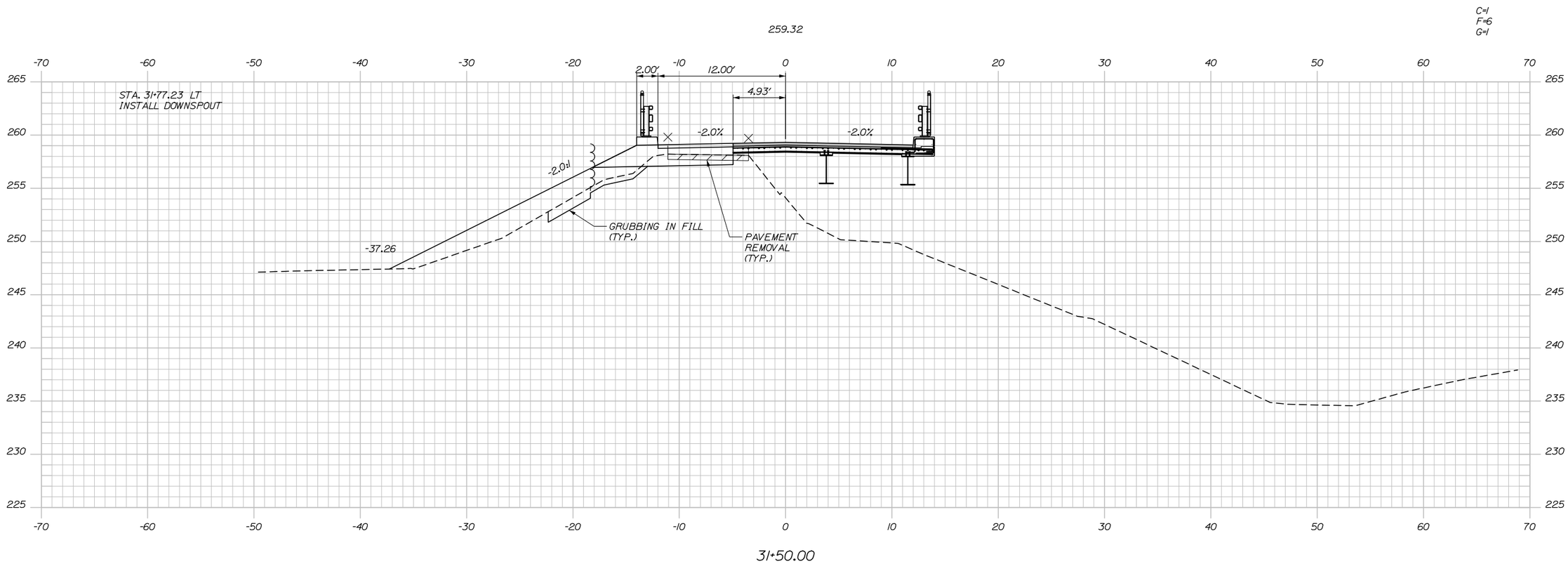

Scale: 5 0 5 10
Scale of Feet

No.	Revision	By	Date

Designed by:

HNTB

CONSULTANT PROJECT MANAGER: Dale A. Mitchell, P.E.

	By	Date		By	Date
Designed	LZD	11/15	Checked	DAM	11/15
Drawn	SLR	11/15	In Charge of	RAL	11/15

HNTB CORPORATION
340 County Road, Suite 6-C
Westbrook, ME 04092
TEL (207) 774-5155
FAX (207) 228-0909

MAINE TURNPIKE

THE GOLD STAR MEMORIAL HIGHWAY

MTA PROJECT MANAGER: Ralph C. Norwood IV, P.E., P.T.O.E.

BRIDGE SUPERSTRUCTURE REPLACEMENT
SMALL ROAD UNDERPASS

STA. 31+50

SHEET NUMBER: XS-12

CONTRACT:2016.03

Filename: xsecx.dgn

Date:12/23/2015

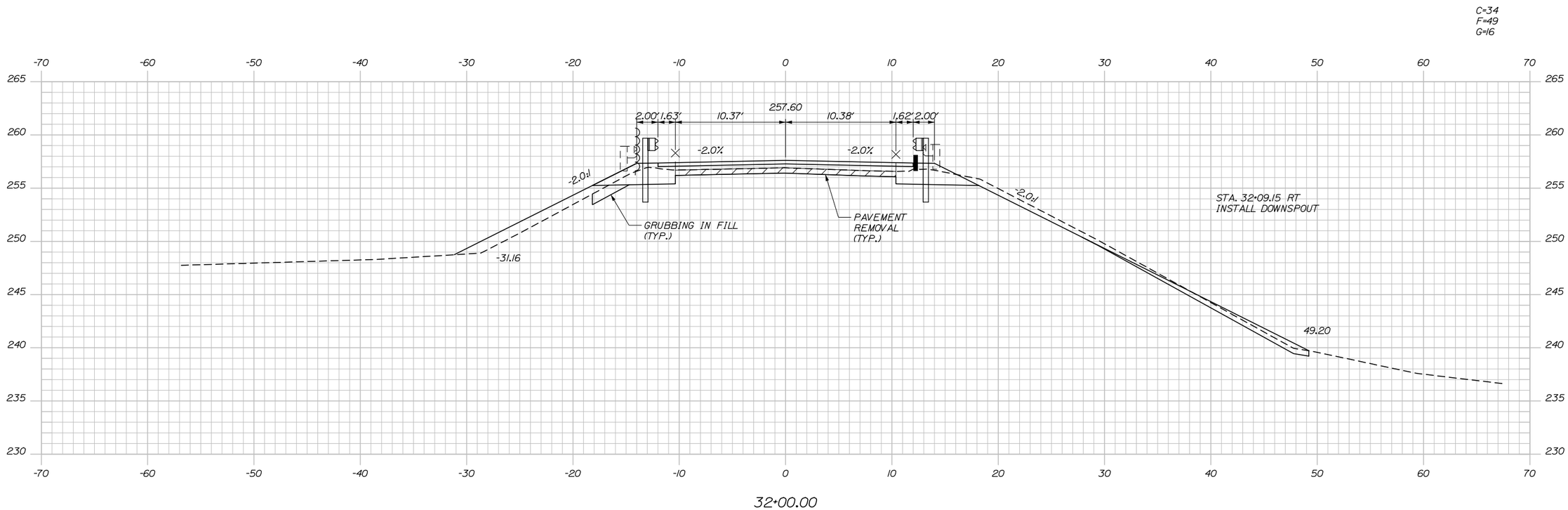

Scale: 5 0 5 10
Scale of Feet

No.	Revision	By	Date

Designed by:

HNTB

CONSULTANT PROJECT MANAGER: Dale A. Mitchell, P.E.

	By	Date		By	Date
Designed	LZD	11/15	Checked	DAM	11/15
Drawn	SLR	11/15	In Charge of	RAL	11/15

HNTB CORPORATION
340 County Road, Suite 6-C
Westbrook, ME 04092
TEL (207) 774-5155
FAX (207) 228-0909

MAINE TURNPIKE

THE GOLD STAR MEMORIAL HIGHWAY

MTA PROJECT MANAGER: Ralph C. Norwood IV, P.E., P.T.O.E.

BRIDGE SUPERSTRUCTURE REPLACEMENT
SMALL ROAD UNDERPASS

STA. 32+00

SHEET NUMBER: XS-13

CONTRACT:2016.03

Filename: xsecx.dgn

Date:12/23/2015

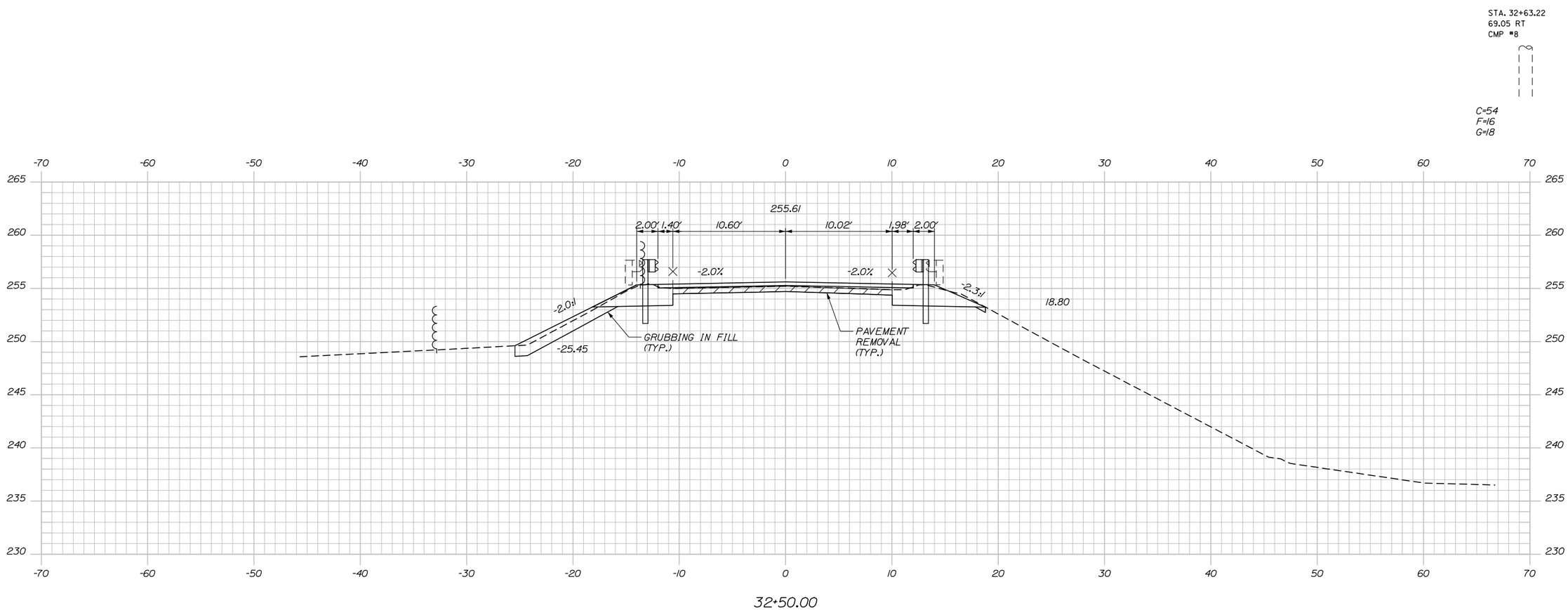

Scale: 5 0 5 10
Scale of Feet

No.	Revision	By	Date

Designed by:

HNTB

CONSULTANT PROJECT MANAGER: Dale A. Mitchell, P.E.

	By	Date		By	Date
Designed	LZD	11/15	Checked	DAM	11/15
Drawn	SLR	11/15	In Charge of	RAL	11/15

HNTB CORPORATION
340 County Road, Suite 6-C
Westbrook, ME 04092
TEL (207) 774-5155
FAX (207) 228-0909

MAINE TURNPIKE

THE GOLD STAR MEMORIAL HIGHWAY

MTA PROJECT MANAGER: Ralph C. Norwood IV, P.E., P.T.O.E.

BRIDGE SUPERSTRUCTURE REPLACEMENT
SMALL ROAD UNDERPASS

STA. 32+50

SHEET NUMBER: XS-14

CONTRACT:2016.03

Filename: xsecx.dgn

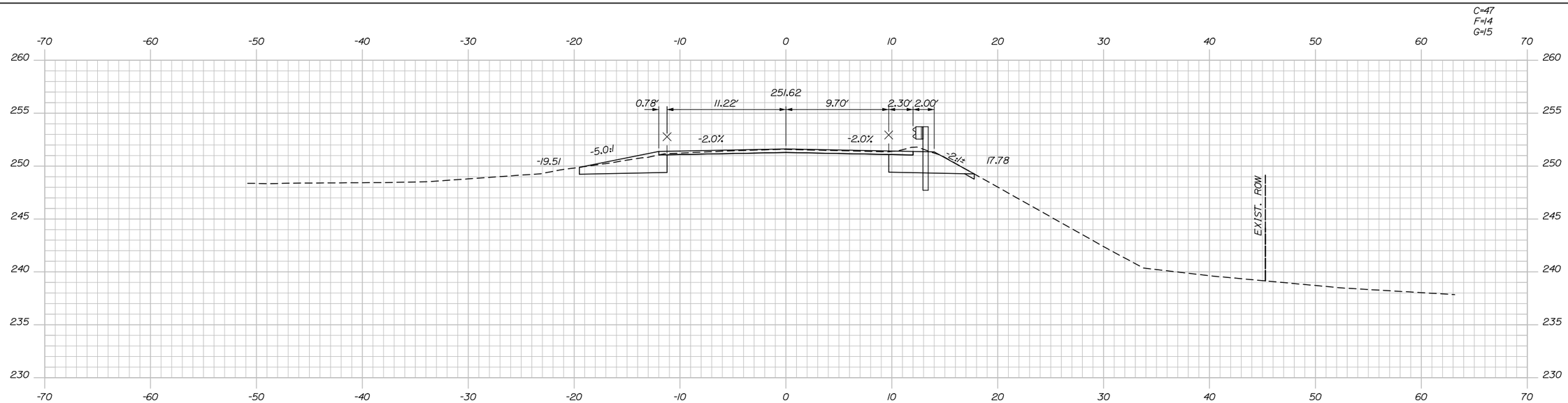

33+50.00

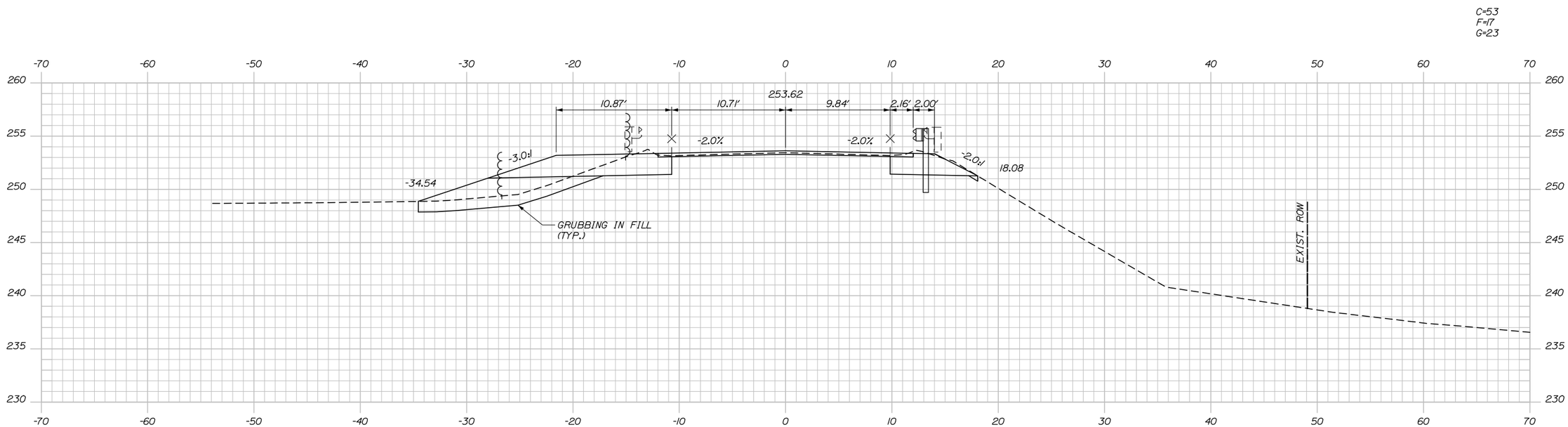

33+00.00

STA. 32+75
END FULL DEPTH PAVEMENT
BEGIN VARIABLE DEPTH MILL AND FILL

Date:12/23/2015

Filename: xsecx.dgn

Scale: 5 0 5 10
Scale of Feet

No.	Revision	By	Date

Designed by: HNTB

CONSULTANT PROJECT MANAGER: Dale A. Mitchell, P.E.

	By	Date		By	Date
Designed	LZD	11/15	Checked	DAM	11/15
Drawn	SLR	11/15	In Charge of	RAL	11/15

HNTB CORPORATION
340 County Road, Suite 6-C
Westbrook, ME 04092
TEL (207) 774-5155
FAX (207) 228-0909

MAINE TURNPIKE

THE GOLD STAR MEMORIAL HIGHWAY

MTA PROJECT MANAGER: Ralph C. Norwood IV, P.E., P.T.O.E.

BRIDGE SUPERSTRUCTURE REPLACEMENT
SMALL ROAD UNDERPASS

STA. 33+00 TO STA. 33+50

SHEET NUMBER: XS-15

CONTRACT:2016.03

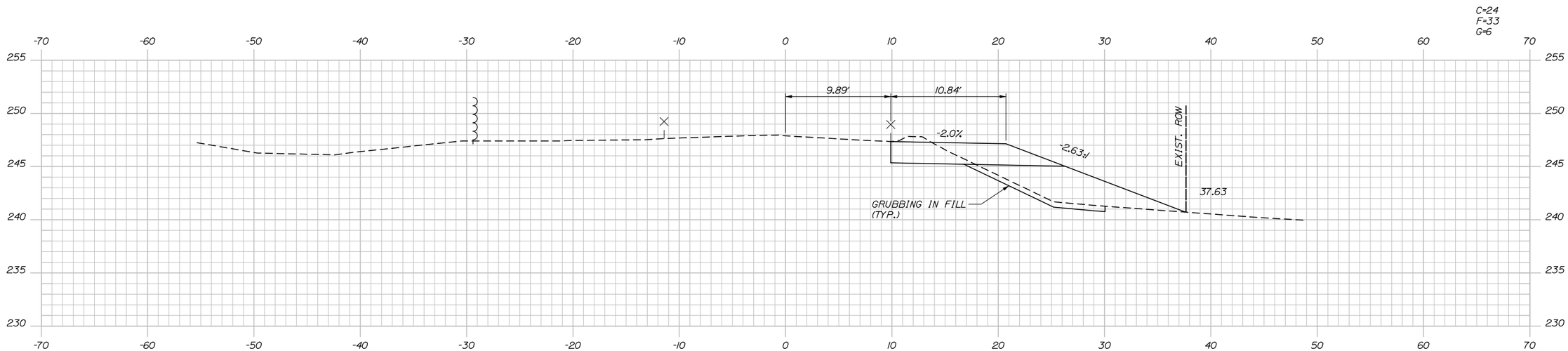

34+50.00

STA. 34+27.50
32.41 RT
CMP #6

STA. 33+93.68, 15RT
MAILBOX #33
(RELOCATE)

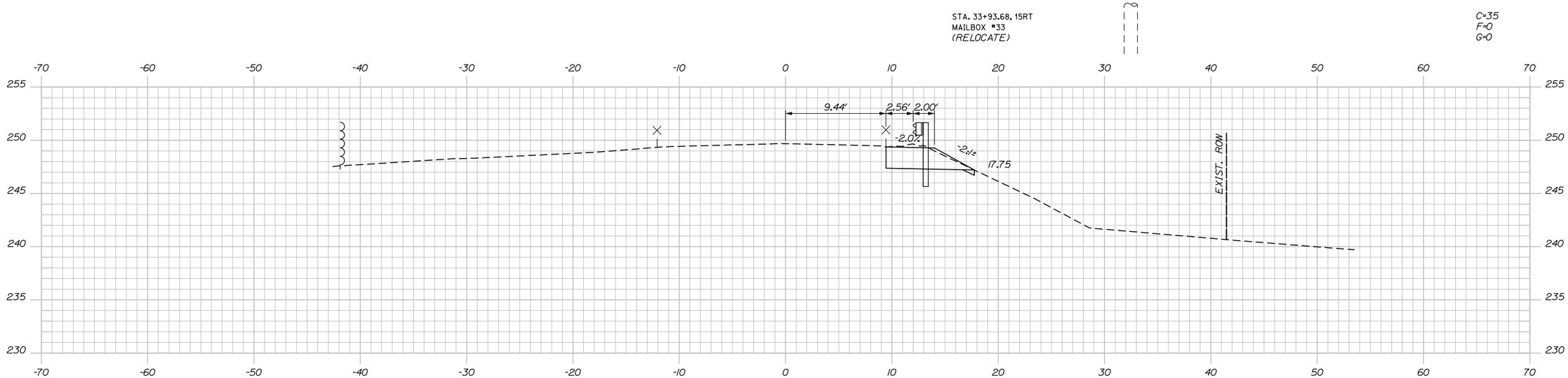

34+00.00

STA. 33+75
MATCH EXISTING PAVEMENT
END VARIABLE DEPTH MILL AND FILL

Date:12/23/2015

Filename: xsecx.dgn

Scale: 5 0 5 10
Scale of Feet

No.	Revision	By	Date

Designed by:

HNTB

CONSULTANT PROJECT MANAGER: Dale A. Mitchell, P.E.

	By	Date		By	Date
Designed	LZD	11/15	Checked	DAM	11/15
Drawn	SLR	11/15	In Charge of	RAL	11/15

HNTB CORPORATION
340 County Road, Suite 6-C
Westbrook, ME 04092
TEL (207) 774-5155
FAX (207) 228-0909

MAINE TURNPIKE

THE GOLD STAR MEMORIAL HIGHWAY

MTA PROJECT MANAGER: Ralph C. Norwood IV, P.E., P.T.O.E.

BRIDGE SUPERSTRUCTURE REPLACEMENT
SMALL ROAD UNDERPASS

STA. 34+00 TO STA. 34+50

SHEET NUMBER: XS-16

CONTRACT:2016.03

31OF 65

Date:12/23/2015

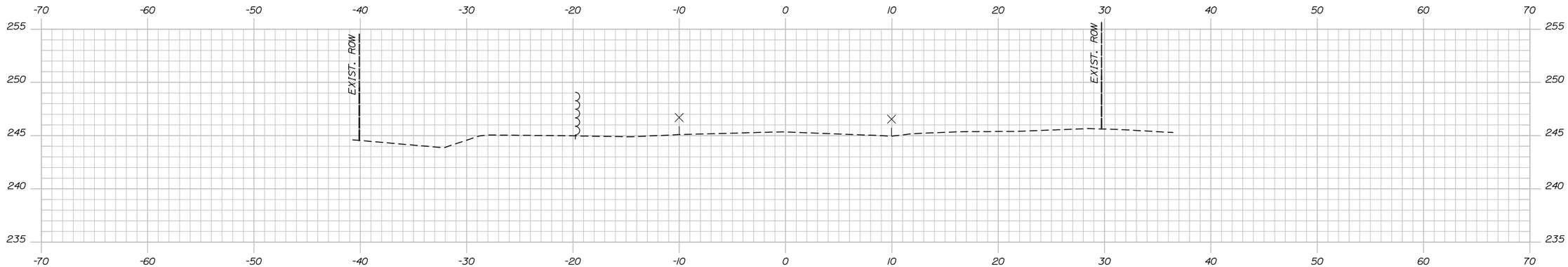

35+50.00

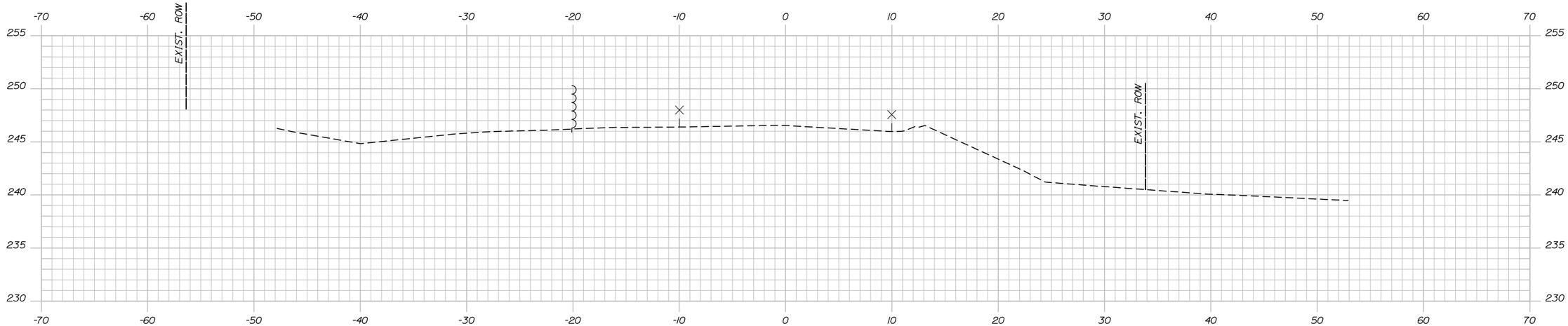

35+00.00

STA. 35+00 RT
LIMIT OF WORK
END SHOULDER RECONSTRUCTION

Scale: 5 0 5 10
Scale of Feet

No.	Revision	By	Date

Designed by:

HNTB

CONSULTANT PROJECT MANAGER: Dale A. Mitchell, P.E.

	By	Date		By	Date
Designed	LZD	11/15	Checked	DAM	11/15
Drawn	SLR	11/15	In Charge of	RAL	11/15

HNTB CORPORATION
340 County Road, Suite 6-C
Westbrook, ME 04092
TEL (207) 774-5155
FAX (207) 228-0909

MAINE TURNPIKE

THE GOLD STAR MEMORIAL HIGHWAY

MTA PROJECT MANAGER: Ralph C. Norwood IV, P.E., P.T.O.E.

BRIDGE SUPERSTRUCTURE REPLACEMENT
SMALL ROAD UNDERPASS

STA. 35+00 TO STA. 35+50

SHEET NUMBER: XS-17

CONTRACT:2016.03

Filename: xsecx.dgn

SPECIFICATIONS

DESIGN

AASHTO LRFD BRIDGE DESIGN SPECIFICATIONS, 7TH EDITION, WITH 2015 INTERIM REVISIONS

CONSTRUCTION

STATE OF MAINE, DEPARTMENT OF TRANSPORTATION STANDARD SPECIFICATIONS, HIGHWAYS AND BRIDGES, REVISION OF NOVEMBER 2014.

STATE OF MAINE DEPARTMENT OF TRANSPORTATION STANDARD DETAILS FOR HIGHWAYS AND BRIDGES, REVISON OF NOVEMBER 2014, WITH ALL REVISIONS THERETO.

AASHTO LRFD BRIDGE CONSTRUCTION SPECIFICATIONS, 3RD. EDITION WITH 2016 INTERIMS.

DESIGN LOADING

LIVE LOAD - HL-93

MATERIALS

CONCRETE

DECK CONCRETE - CLASS AAA-DECK

ALL OTHER CONCRETE SHALL BE CLASS AAA, U.O.N

REINFORCING STEEL

AASHTO M31, GRADE 60
ALL REINFORCING SHALL BE EPOXY-COATED.

ANCHOR RODS SHALL MEET THE REQUIREMENTS OF ASTM F1554, GRADE 55 AND SHALL BE SWEDGED OR THREADED ON THE EMBEDDED PORTION OF THE ROD.

STRUCTURAL STEEL

WELDED GIRDERS: FLANGES, WEBS, SPLICE PLATES, FILLER PLATES, DIAPHRAGMS, BEARING STIFFENERS AND BEARING BOLSTERS SHALL BE AASHTO M270, GRADE 50W.

ALL OTHER STRUCTURAL STEEL SHALL BE AASHTO M270, GRADE 36.

HIGH STRENGTH BOLTS SHALL BE AASHTO M164 (ASTM A325). BOLTS IN CONTACT WITH UNPAINTED WEATHERING STEEL SHALL BE TYPE 3. ALL OTHER BOLTS SHALL BE HOT DIPPED GALVANIZED TYPE 1.

PROTECTIVE COATING

GIRDER ENDS SHALL BE PAINTED TO A DISTANCE OF 10 FEET ALONG THE LENGTH OF GIRDER FROM THE CENTERLINE OF BEARING AT THE ABUTMENTS IN ACCORDANCE WITH SPECIAL PROVISION, SECTION 506, PROTECTIVE COATING - STEEL (ZINC-RICH SYSTEM). THE FINISH TOPCOAT COLOR SHALL BE LUSTERLESS BROWN AND MATCH FEDERAL STANDARD 595 B, COLOR NO. 30045. DIAPHRAGMS WITHIN THE PAINTED ZONE SHALL BE GALVANIZED. ALL BEARING BOLSTERS SHALL BE GALVANIZED.

BASIC DESIGN STRESSES

CONCRETE

CLASS AAA-DECK, f'c = 4,500 P.S.I.
CLASS AAA, f'c = 4,500 P.S.I.

REINFORCING STEEL - fy = 60,000 P.S.I.

STRUCTURAL STEEL

AASHTO M270 (ASTM 709) GRADE 36, Fy = 36,000 P.S.I.
AASHTO M270 (ASTM 709) GRADE 50W, Fy = 50,000 P.S.I.

PRESTRESSING STRANDS - Fu = 270,000 P.S.I.

PRECAST CONCRETE

f'c = 6,000 P.S.I.
f'ci = 4,000 P.S.I.

LIST OF ABBREVIATIONS

ABUT. - ABUTMENT
ADDL. - ADDITIONAL
ALT. - ALTERNATE
APPROX. - APPROXIMATELY
BOT. - BOTTOM
BRG. - BEARING
CL. - CLEAR
℄ - CENTERLINE
CONC. - CONCRETE
CONSTR. - CONSTRUCTION
C.Y. - CUBIC YARD
DEMO. - DEMOLITION
DIA. - DIAMETER
EA. - EACH
EB - EASTBOUND
E.F. - EACH FACE
EL. - ELEVATION
EQ. - EQUAL
EXIST. - EXISTING
EXP. - EXPANSION
F.F. - FAR FACE
JT. - JOINT
MAX. - MAXIMUM
MEDOT - MAINE DEPARTMENT OF TRANSPORTATION
MIN. - MINIMUM
MTA - MAINE TURNPIKE AUTHORITY
NB - NORTHBOUND
N.F. - NEAR FACE
N.T.S. - NOT TO SCALE
PED. - PEDESTAL
PGL - PROFILE GRADE LINE
ℙ - PLATE
PROP. - PROPOSED
P.S.I. - POUNDS per SQUARE INCH
RDWY. - ROADWAY
SHLDR. - SHOULDER
SB - SOUTHBOUND
SF - SQUARE FEET
SP. - SPACES
STA. - STATION
T.&B. - TOP & BOTTOM
TPKE. - TURNPIKE
TYP. - TYPICAL
U.O.N. - UNLESS OTHERWISE NOTED
VERT. - VERTICAL
WB - WESTBOUND
W.P. - WORKING POINT
WW - WINGWALL

INDEX OF DRAWINGS

PAGE NUMBER	TITLE	SHEET NUMBER
33	GENERAL NOTES, INDEX AND QUANTITIES	S-01
34	BRIDGE GENERAL PLAN AND ELEVATION	S-02
35	ABUTMENT 1 DEMOLITION AND REPAIRS	S-03
36	ABUTMENT 2 DEMOLITION AND REPAIRS	S-04
37	ABUTMENT REPAIR DETAILS	S-05
38	PIER 1 DEMOLITION AND REPAIRS	S-06
39	PIER 2 DEMOLITION AND REPAIRS	S-07
40	PIER 3 DEMOLITION AND REPAIRS	S-08
41	ABUTMENT PLAN AND ELEVATION	S-09
42	ABUTMENT MODIFICATION DETAILS	S-10
43	WINGWALL MODIFICATION DETAILS I	S-11
44	WINGWALL MODIFICATION DETAILS II	S-12
45	BEARING DETAILS I	S-13
46	BEARING DETAILS II	S-14
47	BEARING DETAILS III	S-15
48	FRAMING PLAN	S-16
49	STRUCTURAL STEEL DETAILS I	S-17
50	STRUCTURAL STEEL DETAILS II	S-18
51	STRUCTURAL STEEL DETAILS III	S-19
52	STRUCTURAL STEEL DETAILS IV	S-20
53	TYPICAL SECTION	S-21
54	SUPERSTRUCTURE PLAN	S-22
55	SUPERSTRUCTURE DETAILS I	S-23
56	SUPERSTRUCTURE DETAILS II	S-24
57	BRIDGE RAIL TRANSITION DETAILS	S-25
58	SNOW FENCE DETAILS	S-26
59	EXPANSION JOINT DETAILS I	S-27
60	EXPANSION JOINT DETAILS II	S-28
61	EXPANSION JOINT DETAILS III	S-29
62	REINFORCING STEEL SCHEDULE	S-30

ORIGINAL CONSTRUCTION PLANS

63 OF 65	AS-BUILT GENERAL PLAN AND ELEVATION
64 OF 65	AS-BUILT SUBSTRUCTURE
65 OF 65	AS-BUILT SUPERSTRUCTURE

ITEM NO.	ITEM DESCRIPTION	Supplemental	UNIT	STRUCTURAL QUANTITY
202.10	Removing Existing Superstructure	880 SY	LS	1
202.12	Removing Existing Structural Concrete		CY	42
202.191	Removing Existing Drain Troughs		LS	1
203.43	Geofoam Lightweight Fill		CY	125
203.45	Leveling Sand		CY	15
206.082	Structural Earth Excavation - Major Structures		CY	160
304.10	Aggregate Subbase Course - Gravel		CY	30
409.15	Bituminous Tack Coat, Applied		Gal	47
502.219	Structural Concrete, Abutments and Retaining Walls	58 CY	LS	1
502.26	Structural Concrete Roadway and Sidewalk Slab on Steel Bridges	220 CY	LS	1
502.49	Structural Concrete Curbs and Sidewalks	44 CY	LS	1
503.14	Epoxy-Coated Reinforcing Steel, Fabricated and Delivered		LB	94000
503.15	Epoxy-Coated Reinforcing Steel, Placing		LB	94000
504.702	Structural Steel, Fabricated and Delivered, Welded	207,300 LB	LS	1
504.71	Structural Steel Erection	207,300 LB	LS	1
505.08	Shear Connectors	3424 EA	LS	1
506.9102	Zinc Rich Coating System (Shop Applied)		LS	1
507.0821	Steel Bridge Railing, 3 Bar	663 LF	LS	1
508.13	Sheet Waterproofing Membrane	25 SY	LS	1
508.14	High Performance Waterproofing Membrane	780 SY	LS	1
514.06	Curing Box for Concrete Cylinders		EA	1
515.201	Pigmented Protective Coating for Concrete Surfaces		SY	350
515.202	Clear Protective Coating for Concrete Surfaces		SY	430
518.10	Abutment Repairs		SF	20
518.20	Pier Repairs		SF	430
518.30	Abutment Seat Refacing		CY	8
520.221	Expansion Devices - Locking Compression Seal with Steel Edge Beams		EA	2
523.521	Bearing Removal and Installation		EA	20
523.5401	Laminated Elastomeric Bearings, Fixed		EA	4
523.5402	Laminated Elastomeric Bearings, Expansion		EA	16
524.40	Protective Shielding - Steel Girders		SY	1210
606.1728	W-Beam to 3-Bar Bridge Rail Transition		EA	4
607.431	Snow Fence		LF	336
609.11	Vertical Curb Type 1		LF	80
619.1401	Erosion Control Mix		CY	72
620.70	HDPE Geomembrane		SY	250

NOTES

1. THE PROPOSED ELEVATIONS ARE BASED ON PROJECT LOCAL DATUM. THE AS-BUILT PLANS ARE BASED ON NGVD 29 DATUM. PROJECT DATUM SHALL BE ESTABLISHED BASED ON BENCHMARK LOCATED AT N477666.166 E3016175.604 WITH AN ELEVATION OF 233.55.
2. FOR ADDITIONAL DETAILS REFERENCED OR NOT SHOWN IN THESE DRAWINGS, SEE THE STATE OF MAINE, DEPARTMENT OF TRANSPORTATION STANDARD DETAILS, HIGHWAYS AND BRIDGES, NOVEMBER 2014 WITH UPDATES.
3. COPIES OF THE AS-BUILT PLANS ARE ON FILE AT THE MAINE TURNPIKE AUTHORITY. A PORTION OF THESE PLANS ARE INCLUDED IN THIS CONTRACT FOR THE CONTRACTOR'S CONVENIENCE. THE COMPLETENESS AND ACCURACY OF THESE PLANS IS NOT GUARANTEED.
4. REINFORCING STEEL SHALL HAVE A CLEAR COVER OF 2", UNLESS OTHERWISE NOTED.
5. CHAMFER ALL EXPOSED CONCRETE EDGES ¾" UNLESS OTHERWISE NOTED.
6. THE CONTRACTOR SHALL PROFILE THE TOPS OF THE GIRDERS BEFORE THE FORMWORK IS STARTED AND SHALL SUBMIT TO THE RESIDENT THE FINAL BLOCKING ELEVATIONS FOR REVIEW. FIVE (5) WORKING DAYS SHALL BE ALLOWED FOR THE BLOCKING POINT TURN AROUND TIME.
7. ALL BRIDGE CURB AND WINGWALL CONCRETE, INSIDE FACE AND TOP FACE, SHALL HAVE A RUBBED FINISH PRIOR TO THE APPLICATION OF THE PROTECTIVE COATING FOR CONCRETE SURFACE.
8. WHERE DRILLING AND ANCHORING IS SPECIFIED THE CONTRACTOR SHALL USE A MATERIAL LISTED ON THE MAINE DEPARTMENT OF TRANSPORTATION QUALIFIED LIST OF CONCRETE ADHESIVE ANCHOR SYSTEMS. THE DEPTH OF EMBEDMENT SHALL BE SUFFICIENT TO DEVELOP 125% OF THE YIELD STRENGTH OF THE BAR, BUT SHALL BE NO LESS THAN THE MINIMUM DEPTH OF EMBEDMENT WHEN SPECIFIED. WHERE MINIMUM EMBEDMENT DEPTHS HAVE NOT BEEN SPECIFIED BAR LENGTHS HAVE BEEN DEVELOPED BASED ON AN ASSUMED EMBEDMENT DEPTH OF 9" FOR #5 BARS AND 1'-0" FOR #6 BARS. THE CONTRACTOR SHALL VERIFY THE REQUIRED DEPTH OF EMBEDMENT AND ADJUST THE REQUIRED BAR LENGTHS AS REQUIRED.
9. ALL AREAS OF STRUCTURAL EXCAVATION SHALL BE BACKFILLED WITH AGGREGATE SUBBASE COURSE-GRAVEL. BACKFILL PLACED WITHIN THE STRUCTURAL EXCAVATION PAY LIMITS WILL BE MEASURED FOR PAYMENT UNDER PAY ITEM 304.10, AGGREGATE SUBBASE COURSE-GRAVEL.

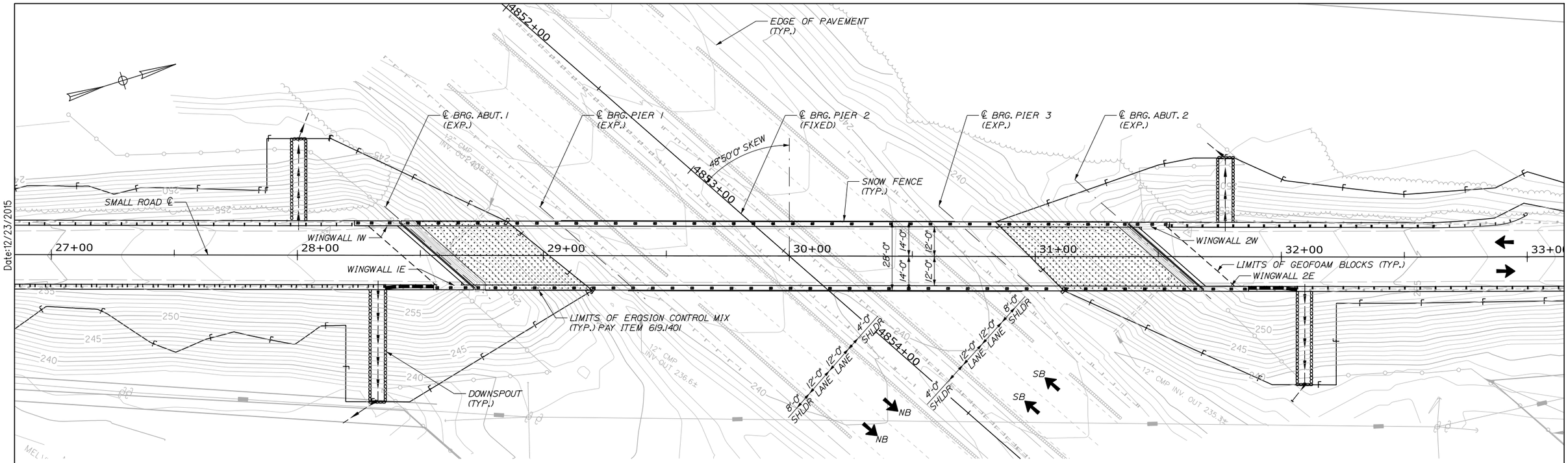

GENERAL PLAN
1" = 20'-0"

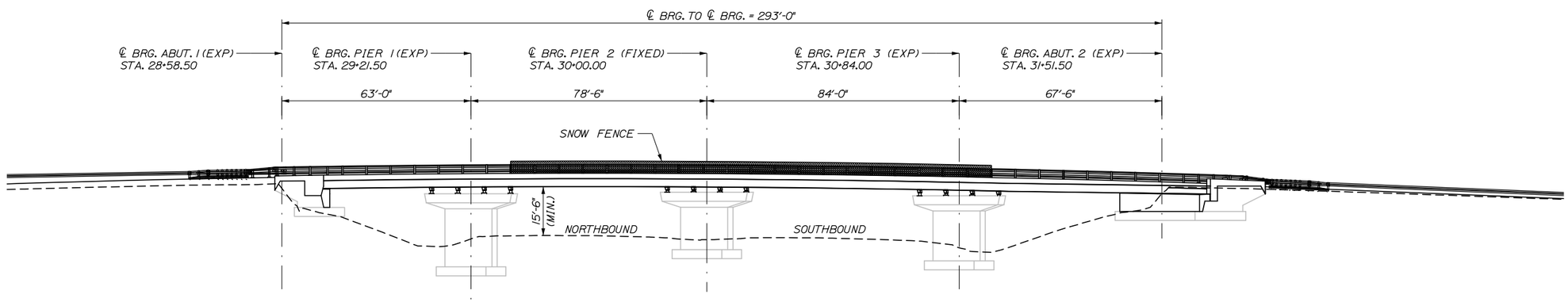

ELEVATION
1" = 20'-0"

Date:12/23/2015

Filename: 034_General Plan and Elevation.dgn

Scale:			
No.	Revision	By	Date

Designed by:

HNTB

CONSULTANT PROJECT MANAGER: Dale A. Mitchell, P.E.

	By	Date		By	Date
Designed	GLS	11/15	Checked	KEB	11/15
Drawn	PEB	11/15	In Charge of	RAL	11/15

HNTB CORPORATION
340 County Road, Suite 6-C
Westbrook, ME 04092
TEL (207) 774-5155
FAX (207) 228-0909

MAINE TURNPIKE

THE GOLD STAR MEMORIAL HIGHWAY

MTA PROJECT MANAGER: Ralph C. Norwood IV, P.E., P.T.O.E.

BRIDGE SUPERSTRUCTURE REPLACEMENT
SMALL ROAD UNDERPASS

BRIDGE GENERAL PLAN AND ELEVATION

SHEET NUMBER: S-02

CONTRACT:2016.03

GENERAL NOTES:

1. ABUTMENT CONCRETE REPAIRS, OUTSIDE OF THE FULL DEMOLITION LIMITS WILL BE PAID UNDER ITEM 518.10, ABUTMENT REPAIRS, AND ITEM 518.30, ABUTMENT SEAT REFACING.

2. CONCRETE DEMOLITION, WHICH GENERALLY INCLUDES EXISTING ENDPOSTS, APPROACH CURBS AND ABUTMENT BACKWALLS, WILL BE MEASURED FOR PAYMENT UNDER PAY ITEM 202.12, REMOVING EXISTING STRUCTURAL CONCRETE. THIS WORK SHALL INCLUDE SAWCUTTING AND REMOVING EXISTING CONCRETE AND REINFORCING STEEL TO THE LIMITS SHOWN ON THE PLANS.

3. EXCAVATION REQUIRED TO COMPLETE ABUTMENT AND PIER REPAIRS SHALL BE MEASURED FOR PAYMENT UNDER PAY ITEM 206.082, STRUCTURAL EARTH EXCAVATION-MAJOR STRUCTURES. BACKFILL OF THE REPAIR AREAS SHALL BE INCIDENTAL TO THE STRUCTURAL EXCAVATION PAY ITEM.

4. WHERE ABUTMENT SEAT REFACING IS SPECIFIED, THE TOP, FRONT, AND END OF THE EXISTING ABUTMENT SEATS SHALL BE REMOVED AND REPLACED TO THE LIMITS SHOWN ON THE PLANS. THE WORK WILL BE MEASURED FOR PAYMENT UNDER PAY ITEM 518.30, ABUTMENT SEAT REFACING. THE FABRICATION AND PLACEMENT OF REINFORCING STEEL WILL NOT BE MEASURED FOR PAYMENT SEPARATELY, BUT SHALL BE INCIDENTAL TO ITEM 518.30

5. FOR ADDITIONAL REPAIR DETAILS, SEE SHEET S-05.

6. THE LIMITS OF CONCRETE ABUTMENT SEAT REPLACEMENT UNDER PAY ITEM 502.219 STRUCTURAL CONCRETE, ABUTMENTS AND RETAINING WALLS, SHALL EXTEND 8" BELOW THE EXISTING TOP OF ABUTMENT SEAT AT FACE OF BACKWALL. ANY CONCRETE REQUIRED FOR ADDITIONAL DEPTH SHALL BE INCIDENTAL TO ITEM 502.219.

REMOVAL PROCEDURES:

1. PRIOR TO THE START OF THE CONCRETE REMOVALS, THE CONTRACTOR SHALL REMOVE TECTYL COATING WHERE PRESENT, AND THEN THE RESIDENT AND THE CONTRACTOR SHALL SOUND THE CONCRETE AND AGREE ON THE REMOVAL LIMITS. SHOULD THE REMOVAL AREA LIMITS APPEAR TO CHANGE DURING THE SOUNDING PROCESS, THE CONTRACTOR SHALL NOTIFY THE RESIDENT. THE RESIDENT AND CONTRACTOR SHALL AGREE ON THE REVISED PAY LIMITS PRIOR TO THE CONTRACTOR CONTINUING THE REMOVALS. WORK SHALL BE INCIDENTAL TO THE SPECIFIED REPAIR ITEM IN SPECIAL PROVISION 518.

2. PERFORM 1 INCH DEEP SAWCUTS ALONG LIMITS OF REMOVAL.

3. CHIP CONCRETE TO DEPTH SHOWN.

ABUTMENT SEAT REFACING PROCEDURE:

1. REMOVE ABUTMENT SEAT CONCRETE AND REINFORCING STEEL WITHIN LIMITS SHOWN.

2. INSTALL NEW REINFORCING STEEL. DRILL AND GROUT BARS INTO EXISTING CONCRETE AS REQUIRED.

3. INSTALL FORMWORK, APPLY EPOXY BONDING AGENT, AND FILL FORMS WITH CLASS AAA CONCRETE. BEARING PADS SHALL BE CAST MONOLITHICALLY WITH THE ABUTMENT SEAT CONCRETE.

4. PERFORM GENERAL FINISHING.

CONCRETE SURFACE PATCH/REPAIR PROCEDURE:

1. PREPARE AND PATCH REPAIR AREAS WITH CLASS AAA MODIFIED CONCRETE OR OTHER APPROVED MATERIALS AS SPECIFIED IN SPECIAL PROVISION 518.

2. PERFORM GENERAL FINISHING (SEE BELOW).

GENERAL FINISHING:

1. CONTRACTOR SHALL ENSURE ALL TECTYL COATING HAS BEEN REMOVED PRIOR TO APPLYING PIGMENTED PROTECTIVE CONCRETE COATING. WORK SHALL BE INCIDENTAL TO THE SPECIFIED REPAIR ITEM IN SPECIAL PROVISION 518.

2. ALL EXPOSED ABUTMENT SURFACES, EXCEPT FOR THE ROADWAY FACE AND TOP OF WINGWALL CURBS, SHALL BE COATED WITH PIGMENTED COATING FOR CONCRETE SURFACES AFTER RECONSTRUCTION IS COMPLETE AND MATERIAL HAS CURED.

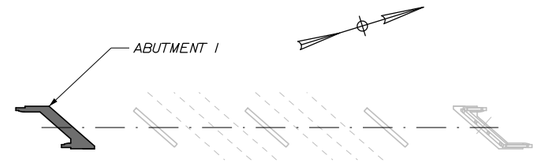

KEY PLAN
NTS

REPAIR QUANTITIES

ABUTMENT SEAT REFACING	4 C.Y.
ABUTMENT SURFACE PATCH REPAIR	10 S.F.*

* 10 S.F. REPAIR QUANTITY IS A CONTINGENCY.

DEMOLITION QUANTITIES

REMOVING EXISTING STRUCTURAL CONCRETE	21 C.Y.

LEGEND

- LIMIT OF CONCRETE DEMOLITION
- LIMIT OF SURFACE PATCH REPAIR
- LIMIT OF ABUTMENT SEAT REFACING
- (#) SQUARE FOOT AREA OF REPAIR

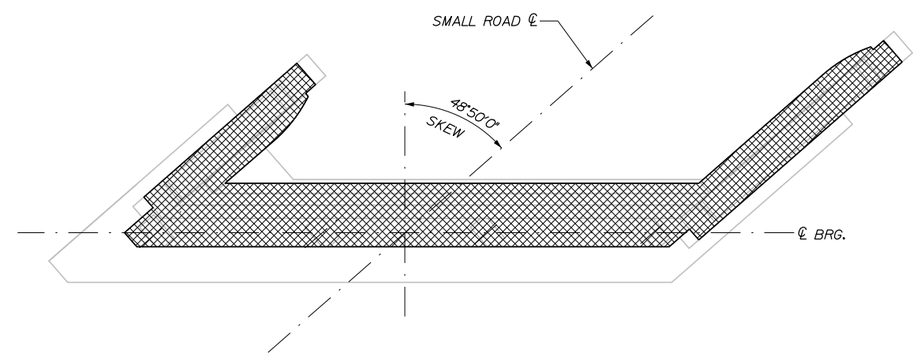

PLAN - ABUTMENT 1
3/16" = 1'-0"

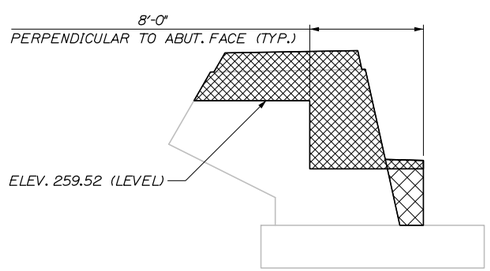

WINGWALL 1E
3/16" = 1'-0"

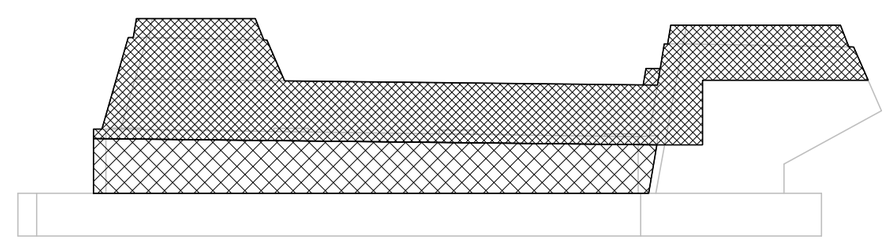

ELEVATION - ABUTMENT 1
3/16" = 1'-0"

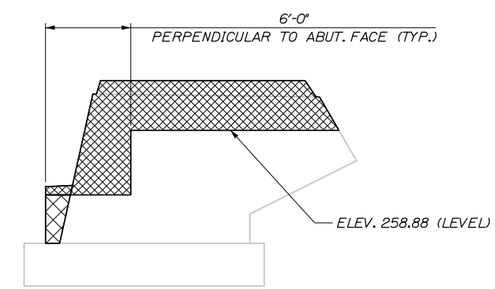

WINGWALL 1W
3/16" = 1'-0"

Date:12/23/2015

Filename: 035_AbutDemRep-A1.dgn

Scale:			
No.	Revision	By	Date

Designed by: HNTB

CONSULTANT PROJECT MANAGER: Dale A. Mitchell, P.E.

	By	Date		By	Date
Designed	GLS	11/15	Checked	KEB	11/15
Drawn	PEB	11/15	In Charge of	RAL	11/15

HNTB CORPORATION
340 County Road, Suite 6-C
Westbrook, ME 04092
TEL (207) 774-5155
FAX (207) 228-0909

MAINE TURNPIKE

THE GOLD STAR MEMORIAL HIGHWAY

MTA PROJECT MANAGER: Ralph C. Norwood IV, P.E., P.T.O.E.

BRIDGE SUPERSTRUCTURE REPLACEMENT
SMALL ROAD UNDERPASS

ABUTMENT 1 DEMOLITION AND REPAIRS

SHEET NUMBER: S-03

CONTRACT:2016.03

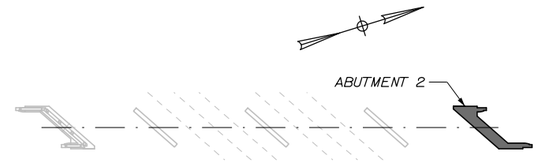

KEY PLAN
NTS

REPAIR QUANTITIES

ABUTMENT SEAT REFACING	4 C.Y.
ABUTMENT SURFACE PATCH REPAIR	10 S.F.*

* 10 S.F. REPAIR QUANTITY IS A CONTINGENCY.

DEMOLITION QUANTITIES

REMOVING EXISTING STRUCTURAL CONCRETE	21 C.Y.

LEGEND

- LIMIT OF CONCRETE DEMOLITION
- LIMIT OF SURFACE PATCH REPAIR
- LIMIT OF ABUTMENT SEAT REFACING
- (#) SQUARE FOOT AREA OF REPAIR

NOTES:

1. SEE SHEET S-03 FOR REPAIR NOTES.
2. SEE SHEET S-05 FOR REPAIR DETAILS.

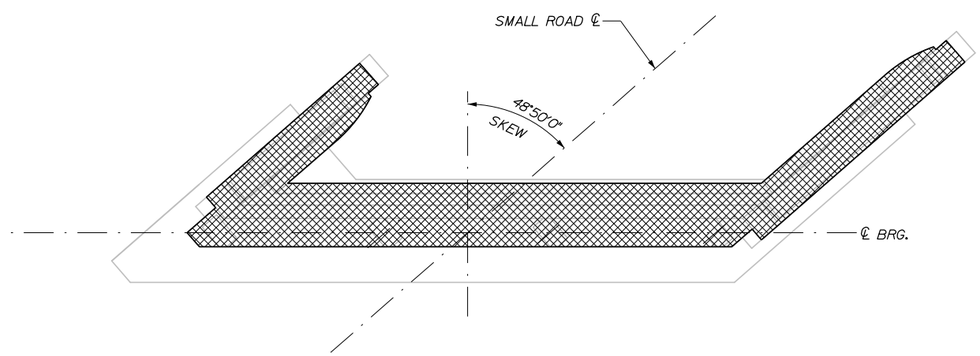

PLAN - ABUTMENT 2
3/16" = 1'-0"

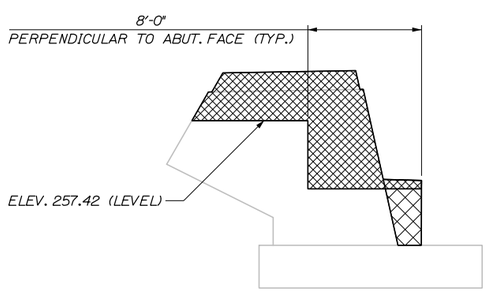

WINGWALL 2W
3/16" = 1'-0"

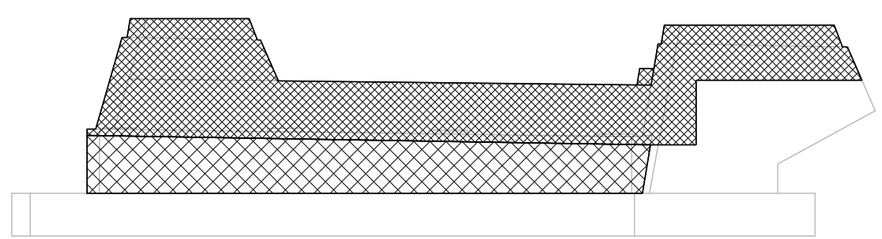

ELEVATION - ABUTMENT 2
3/16" = 1'-0"

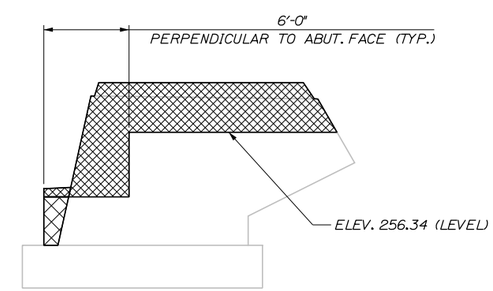

WINGWALL 2E
3/16" = 1'-0"

Date:12/23/2015

Filename: 036_AbutDemRep-A2.dgn

Scale:			
No.	Revision	By	Date

Designed by: HNTB

CONSULTANT PROJECT MANAGER: Dale A. Mitchell, P.E.

	By	Date		By	Date
Designed	GLS	11/15	Checked	KEB	11/15
Drawn	PEB	11/15	In Charge of	RAL	11/15

HNTB CORPORATION
340 County Road, Suite 6-C
Westbrook, ME 04092
TEL (207) 774-5155
FAX (207) 228-0909

MAINE TURNPIKE

THE GOLD STAR MEMORIAL HIGHWAY

MTA PROJECT MANAGER: Ralph C. Norwood IV, P.E., P.T.O.E.

BRIDGE SUPERSTRUCTURE REPLACEMENT
SMALL ROAD UNDERPASS

ABUTMENT 2 DEMOLITION AND REPAIRS

SHEET NUMBER: S-04

CONTRACT:2016.03

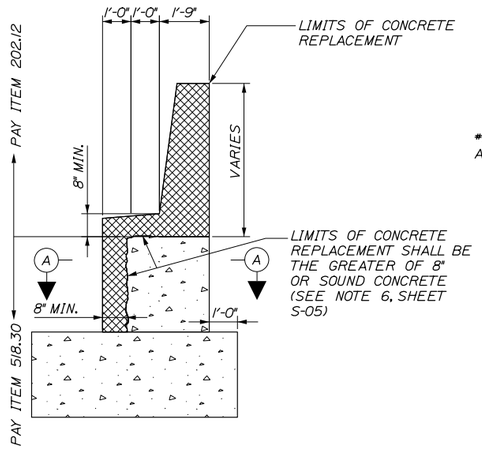

DEMOLITION SECTION

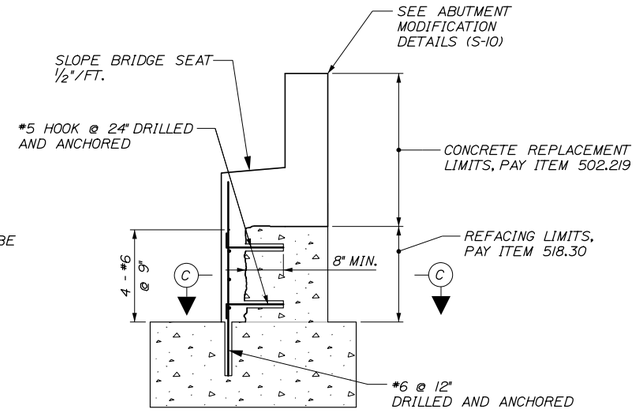

REHABILITATION SECTION

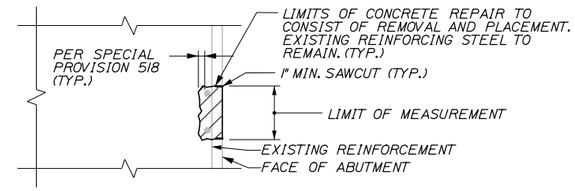

CONCRETE SURFACE PATCH/REPAIR DETAIL

1" = 1'-0"

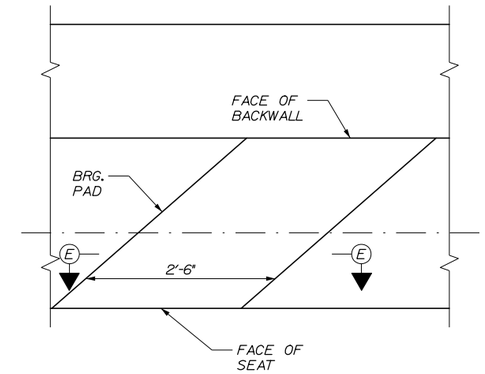

BEARING PAD DETAIL

1" = 1'-0"

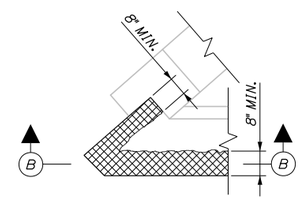

SECTION A-A

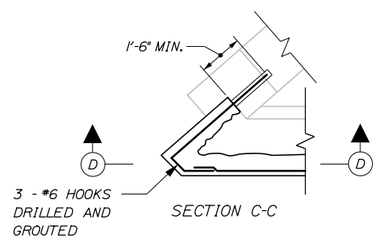

SECTION C-C

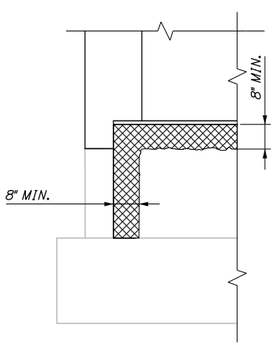

SECTION B-B

END OF SEAT DEMOLITION

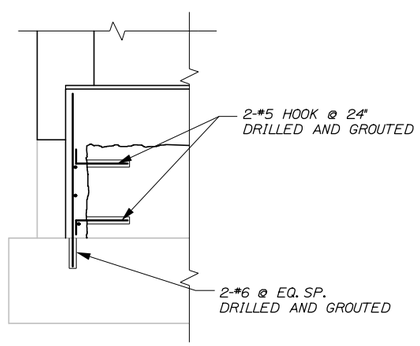

SECTION D-D

END OF SEAT REHABILITATION

ABUTMENT SEAT REFACING DETAILS

3/8" = 1'-0"

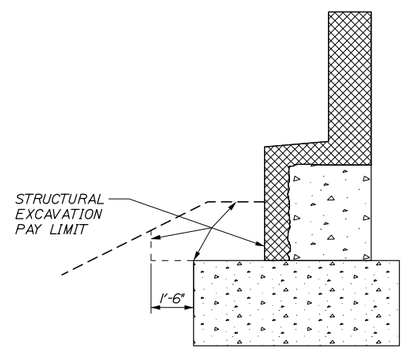

ABUTMENT EXCAVATION AND BACKFILL SECTION

3/8" = 1'-0"

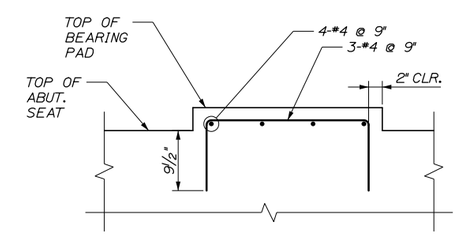

NOTE: REINFORCING BARS SHALL BE USED ONLY WHERE CONCRETE PAD HEIGHT EXCEEDS 4".

SECTION E-E

1" = 1'-0"

NOTE:

1. REINFORCING STEEL FOR ABUTMENT REFACING SHALL BE INCIDENTAL TO PAY ITEM 518.30.

Date:12/23/2015

Filename: 037_Abut Demo and Repairs.dgn

Scale:			
No.	Revision	By	Date

Designed by: HNTB

CONSULTANT PROJECT MANAGER: Dale A. Mitchell, P.E.

	By	Date		By	Date
Designed	GLS	11/15	Checked	KEB	11/15
Drawn	PEB	11/15	In Charge of	RAL	11/15

HNTB CORPORATION
340 County Road, Suite 6-C
Westbrook, ME 04092
TEL (207) 774-5155
FAX (207) 228-0909

MAINE TURNPIKE

THE GOLD STAR MEMORIAL HIGHWAY

MTA PROJECT MANAGER: Ralph C. Norwood IV, P.E., P.T.O.E.

BRIDGE SUPERSTRUCTURE REPLACEMENT
SMALL ROAD UNDERPASS

ABUTMENT
REPAIR DETAILS

SHEET NUMBER: S-05

CONTRACT:2016.03

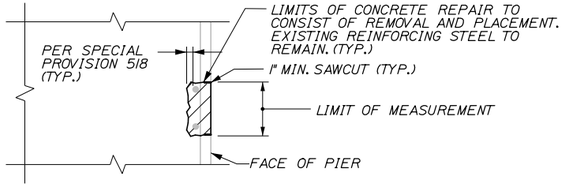

CONCRETE SURFACE PATCH REPAIR DETAIL
1" = 1'-0"

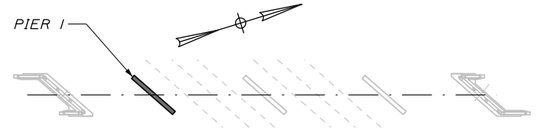

KEY PLAN
NTS

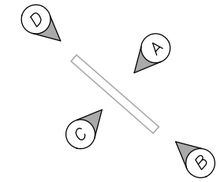

PIER ELEVATION KEY
NTS

REPAIR QUANTITIES

PIER SURFACE PATCH REPAIR 210 S.F.*

* INCLUDES 20 S.F. ADDITIONAL REPAIR QUANTITY AS A CONTINGENCY.

LEGEND

LIMIT OF PIER SURFACE PATCH REPAIR

(#) SQUARE FOOT AREA OF REPAIR

GENERAL NOTES:

1. PIER REPAIR WORK SHALL INCLUDE: PROVIDING ACCESS FOR PIER INSPECTION, PIER SURFACE PATCH REPAIRS, AND SURFICIAL EXCAVATION TO EXPOSE REPAIRS UP TO 6" BELOW GRADE.

2. WHERE PIER SURFACE PATCH REPAIRS ARE SPECIFIED THE WORK SHALL INCLUDE REMOVAL OF UNSOUND CONCRETE AND PLACEMENT AND CURING OF REPAIR MATERIALS. REPAIRS SHALL BE MEASURED FOR PAYMENT UNDER PAY ITEM 518.20, PIER REPAIRS.

3. THE CONTRACTOR SHALL PROVIDE STAGING, OR ANOTHER ACCEPTABLE MEANS OF ACCESS, AT ALL PIER LOCATIONS THAT WILL ALLOW THE RESIDENT TO SAFELY PERFORM A DETAILED CONCRETE INSPECTION OF ALL PIER SURFACES. THIS WORK SHALL BE INCIDENTAL TO PAY ITEM 518.20, PIER REPAIRS.

4. THE QUANTITIES OF PIER REPAIR NOTED ON THESE DRAWINGS HAVE BEEN DEVELOPED BASED PRIMARILY ON VISUAL AND TACTILE INSPECTION OF THE PIERS FROM THE GROUND LEVEL. ACTUAL REPAIR AREAS WILL BE DETERMINED BY THE RESIDENT DURING CONSTRUCTION.

5. EXCAVATION AND BACKFILLING REQUIRED TO COMPLETE PIER REPAIRS SHALL BE INCIDENTAL TO 518.20 PIER REPAIRS.

6. TEMPORARY CONCRETE BARRIER, TYPE I MAY BE USED FOR SHOULDER CLOSURES DURING PIER REPAIRS AS SHOWN IN THE MOT DETAILS. ONE CLOSURE PER BOUND SHALL BE PERMITTED AT ONE TIME.

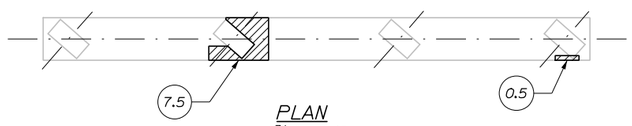

PLAN
3/16" = 1'-0"

REMOVAL PROCEDURES:

1. PRIOR TO THE START OF THE CONCRETE REMOVALS, THE RESIDENT AND THE CONTRACTOR SHALL SOUND THE CONCRETE AND AGREE ON THE REMOVAL LIMITS. SHOULD THE REMOVAL AREA LIMITS APPEAR TO CHANGE DURING THE SOUNDING PROCESS, THE CONTRACTOR SHALL NOTIFY THE RESIDENT. THE RESIDENT AND CONTRACTOR SHALL AGREE ON THE REVISED PAY LIMITS PRIOR TO THE CONTRACTOR CONTINUING THE REMOVALS.

2. PERFORM 1 INCH DEEP SAWCUTS ALONG LIMITS OF REMOVAL.

3. CHIP CONCRETE TO DEPTH SHOWN.

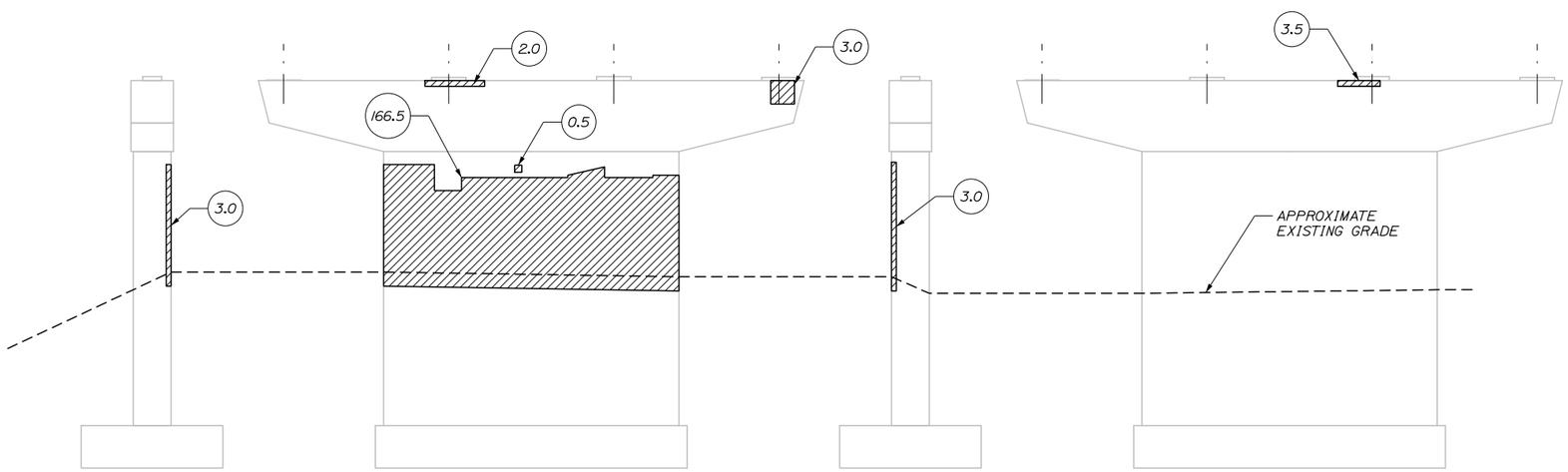

ELEVATION B
3/16" = 1'-0"

ELEVATION A
3/16" = 1'-0"

ELEVATION D
3/16" = 1'-0"

ELEVATION C
3/16" = 1'-0"

CONCRETE SURFACE PATCH/REPAIR PROCEDURE:

1. PREPARE AND PATCH REPAIR AREAS WITH CLASS AAA MODIFIED CONCRETE. SEE SPECIFICATIONS FOR MATERIAL PREPARATION, PLACEMENT, AND CURING REQUIREMENTS.

2. PERFORM GENERAL FINISHING (SEE BELOW).

GENERAL FINISHING:

1. ALL EXPOSED SURFACES SHALL BE COATED WITH EITHER A PIGMENTED OR CLEAR PROTECTIVE COATING SUITABLE FOR CONCRETE SURFACES AFTER PATCHING IS COMPLETED AND PATCH MATERIALS HAVE CURED. THE SOUTH FACE OF PIER 1 AND THE NORTH FACE OF PIER 3 SHALL BE COATED WITH CLEAR PROTECTIVE COATING. ALL OTHER SURFACES SHALL RECEIVE PIGMENTED COATING.

Date:12/23/2015

Filename: 038_PierDemRep-P1.dgn

Scale:

No.	Revision	By	Date

Designed by:

HNTB

CONSULTANT PROJECT MANAGER: Dale A. Mitchell, P.E.

	By	Date		By	Date
Designed	PEB	11/15	Checked	GLS	11/15
Drawn	PEB	11/15	In Charge of	RAL	11/15

HNTB CORPORATION
340 County Road, Suite 6-C
Westbrook, ME 04092
TEL (207) 774-5155
FAX (207) 228-0909

MAINE TURNPIKE

THE GOLD STAR MEMORIAL HIGHWAY

MTA PROJECT MANAGER: Ralph C. Norwood IV, P.E., P.T.O.E.

BRIDGE SUPERSTRUCTURE REPLACEMENT
SMALL ROAD UNDERPASS

PIER 1 DEMOLITION AND REPAIRS

SHEET NUMBER: S-06

CONTRACT:2016.03

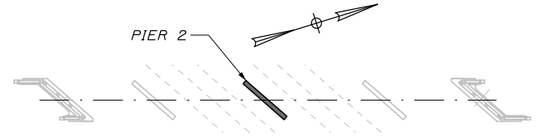

KEY PLAN
NTS

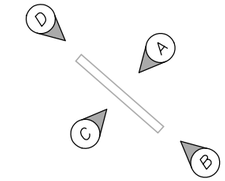

PIER ELEVATION KEY
NTS

REPAIR QUANTITIES

PIER SURFACE PATCH REPAIR 88 S.F.*

* INCLUDES 20 S.F. ADDITIONAL REPAIR QUANTITY AS A CONTINGENCY.

LEGEND

LIMIT OF PIER SURFACE PATCH REPAIR

(#) SQUARE FOOT AREA OF REPAIR

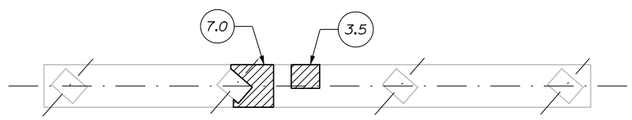

PLAN
3/16" = 1'-0"

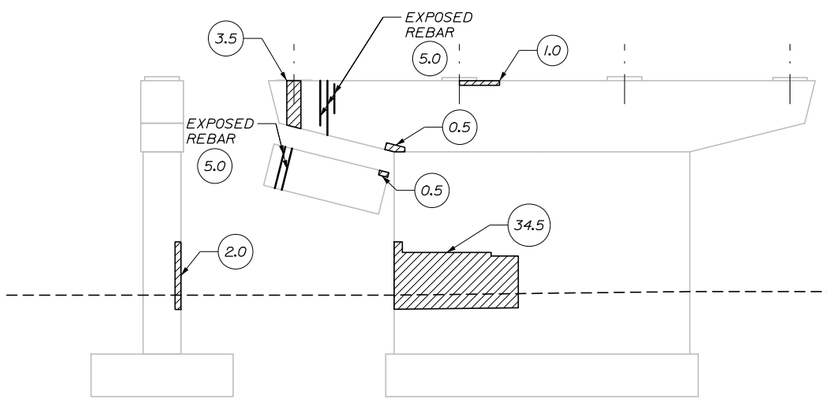

ELEVATION B
3/16" = 1'-0"

ELEVATION A
3/16" = 1'-0"

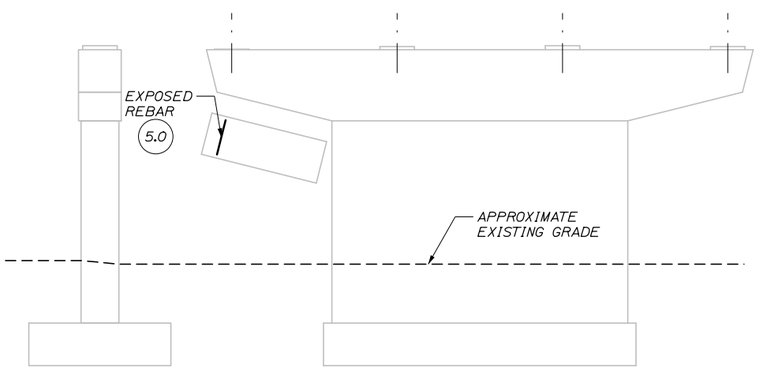

ELEVATION D
3/16" = 1'-0"

ELEVATION C
3/16" = 1'-0"

NOTES:

1. SEE SHEET S-06 FOR REPAIR NOTES.
2. EXPOSED REBAR AREAS ASSUME 5 S.F. OF PATCHING PER EXPOSED AREA.

Date:12/23/2015

Filename: 039_PierDemRep-P2.dgn

Scale:			
No.	Revision	By	Date

Designed by:

HNTB

CONSULTANT PROJECT MANAGER: Dale A. Mitchell, P.E.

	By	Date		By	Date
Designed	PEB	11/15	Checked	GLS	11/15
Drawn	PEB	11/15	In Charge of	RAL	11/15

HNTB CORPORATION
340 County Road, Suite 6-C
Westbrook, ME 04092
TEL (207) 774-5155
FAX (207) 228-0909

MAINE TURNPIKE

THE GOLD STAR MEMORIAL HIGHWAY

MTA PROJECT MANAGER: Ralph C. Norwood IV, P.E., P.T.O.E.

BRIDGE SUPERSTRUCTURE REPLACEMENT
SMALL ROAD UNDERPASS

PIER 2 DEMOLITION AND REPAIRS

SHEET NUMBER: S-07

CONTRACT:2016.03

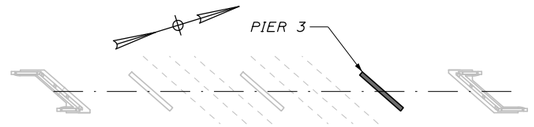

KEY PLAN
NTS

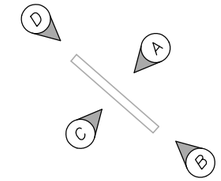

PIER ELEVATION KEY
NTS

REPAIR QUANTITIES

PIER SURFACE PATCH REPAIR 129 S.F.*

* INCLUDES 20 S.F. ADDITIONAL REPAIR QUANTITY AS A CONTINGENCY.

LEGEND

LIMIT OF PIER SURFACE PATCH REPAIR

(#) SQUARE FOOT AREA OF REPAIR

PLAN
3/16" = 1'-0"

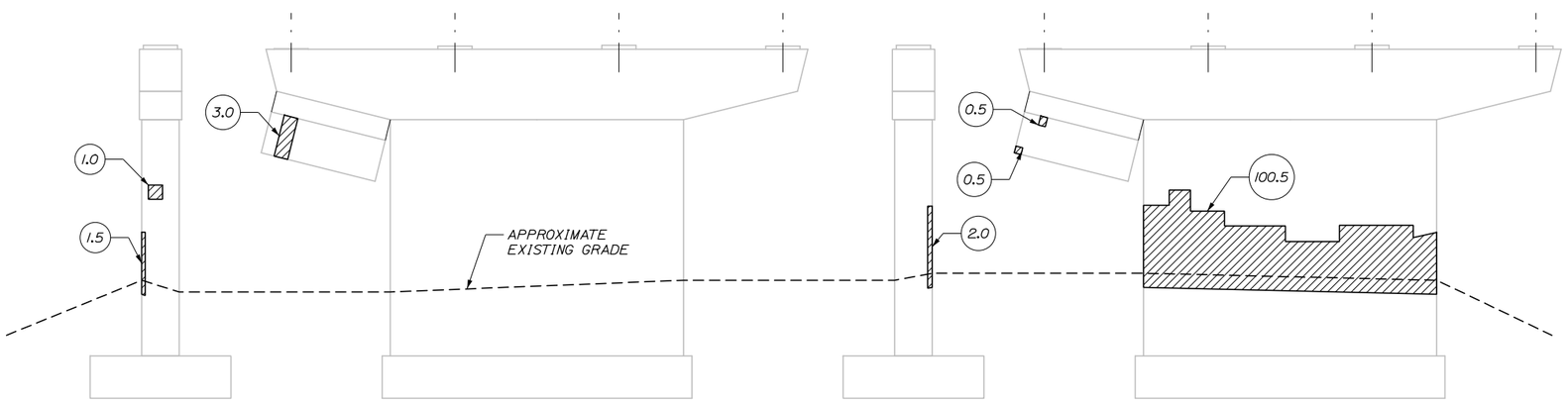

ELEVATION B
3/16" = 1'-0"

ELEVATION A
3/16" = 1'-0"

ELEVATION D
3/16" = 1'-0"

ELEVATION C
3/16" = 1'-0"

NOTES:

1. SEE SHEET S-06 FOR REPAIR NOTES.

Date:12/23/2015

Filename: 040_PierDemRep-P3.dgn

Scale:			
No.	Revision	By	Date

Designed by:

HNTB

CONSULTANT PROJECT MANAGER: Dale A. Mitchell, P.E.

	By	Date		By	Date
Designed	PEB	11/15	Checked	GLS	11/15
Drawn	PEB	11/15	In Charge of	RAL	11/15

HNTB CORPORATION
340 County Road, Suite 6-C
Westbrook, ME 04092
TEL (207) 774-5155
FAX (207) 228-0909

MAINE TURNPIKE

THE GOLD STAR MEMORIAL HIGHWAY

MTA PROJECT MANAGER: Ralph C. Norwood IV, P.E., P.T.O.E.

BRIDGE SUPERSTRUCTURE REPLACEMENT
SMALL ROAD UNDERPASS

PIER 3 DEMOLITION AND REPAIRS

SHEET NUMBER: S-08

CONTRACT:2016.03

ABUTMENT NOTES:

1. ALL EXPOSED ABUTMENT SURFACES, EXCEPT FOR THE ROADWAY FACE AND TOP OF WINGWALL CURBS, SHALL BE COATED WITH PIGMENTED COATING FOR CONCRETE SURFACES AFTER RECONSTRUCTION IS COMPLETE AND MATERIAL HAS CURED.

2. ALL EXISTING CONCRETE SURFACES AGAINST WHICH NEW CONCRETE SHALL BE PLACED SHALL BE ROUGHENED AND COATED WITH AN EPOXY BONDING COMPOUND. THIS WORK SHALL BE INCIDENTAL TO ITEM 502.219.

3. FOR BEARING PEDESTAL REINFORCING DETAILS SEE SHEET S-05.

4. FOR SECTIONS A-A AND B-B SEE SHEET S-10.

5. FOR ABUTMENT KEEPER BLOCK DETAILS AND ELEVATIONS SEE SHEET S-10.

6. FOR WINGWALL REINFORCING DETAILS SEE SHEET S-11 TO S-12.

7. EXPOSED DEMOLITION SHALL BE TREATED PRIOR TO APPLICATION OF PIGMENTED COATING. TREATMENT SHALL INCLUDE A COLD GALVANIZING ON EXPOSED ENDS OF CUT REBAR, A ROUGHENED CONCRETE SURFACE WITH BONDING AGENT, AND A 2-INCH THICK NON-SHRINK GROUT TOPPING SLOPED TO DRAIN.

8. ALL CONCRETE BEARING PEDESTALS AND KEEPER BLOCKS SHALL BE CAST MONOLITHICALLY WITH THE SURROUNDING CONCRETE.

WORKING POINT LOCATIONS	
WINGWALL #1E	STA. 28+70.32 12' LT
WINGWALL #1W	STA. 28+42.88 12' RT
WINGWALL #2E	STA. 31+67.12 12' LT
WINGWALL #2W	STA. 31+39.68 12' RT

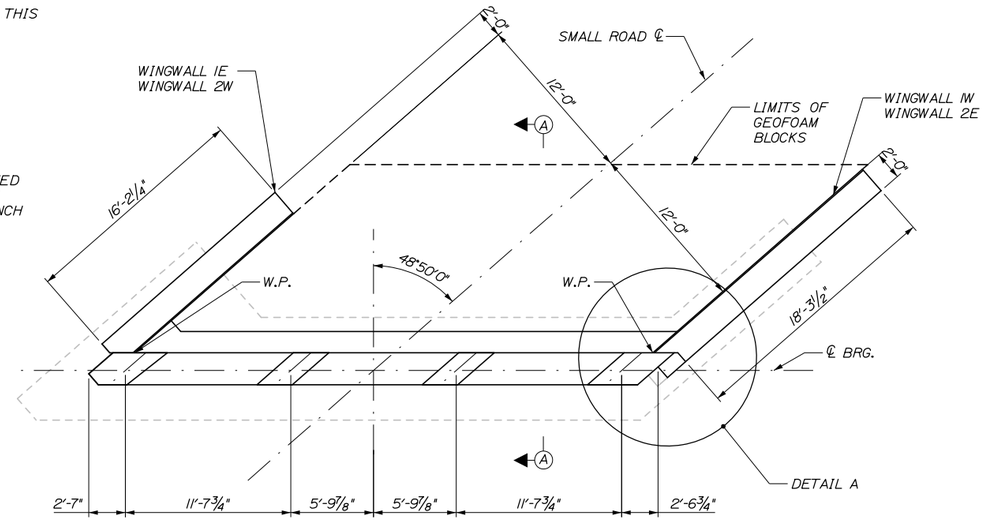

ABUTMENT 1 & 2 PLAN
3/16" = 1'-0"

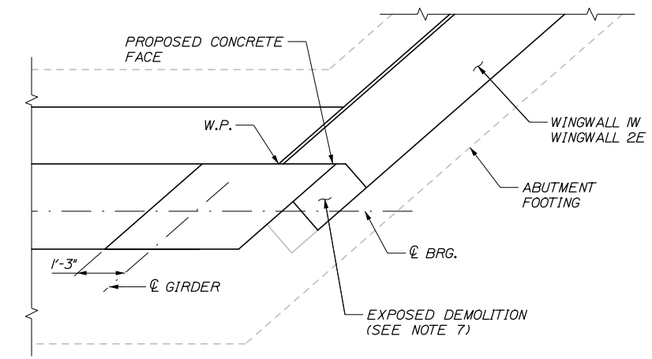

DETAIL A
1/2" = 1'-0"

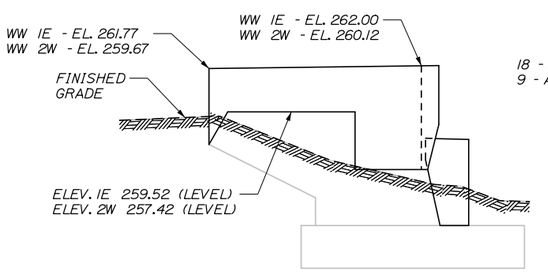

WINGWALL 1E & 2W
3/16" = 1'-0"

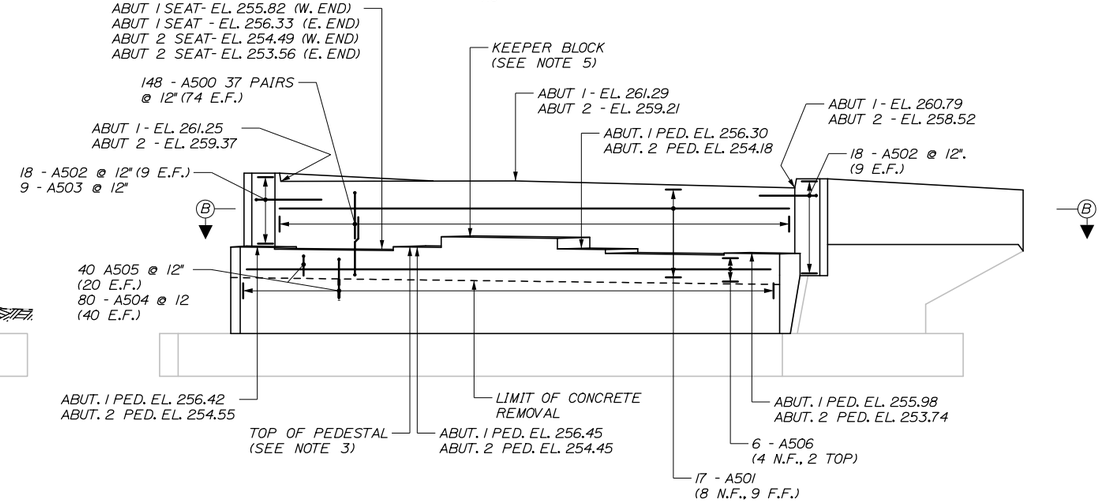

ABUTMENT 1 & 2 ELEVATION
3/16" = 1'-0"

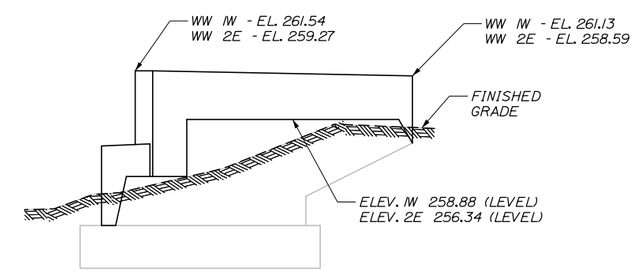

WINGWALL 1W & 2E
3/16" = 1'-0"

Date: 12/23/2015

Filename: 041_Abutment Plan and Elevation.dgn

Scale:			
No.	Revision	By	Date

Designed by:

HNTB

CONSULTANT PROJECT MANAGER: Dale A. Mitchell, P.E.

	By	Date		By	Date
Designed	GLS	11/15	Checked	KEB	11/15
Drawn	PEB	11/15	In Charge of	RAL	11/15

HNTB CORPORATION
340 County Road, Suite 6-C
Westbrook, ME 04092
TEL (207) 774-5155
FAX (207) 228-0909

MAINE TURNPIKE

THE GOLD STAR MEMORIAL HIGHWAY

MTA PROJECT MANAGER: Ralph C. Norwood IV, P.E., P.T.O.E.

BRIDGE SUPERSTRUCTURE REPLACEMENT
SMALL ROAD UNDERPASS

ABUTMENT PLAN AND ELEVATION

SHEET NUMBER: S-09

CONTRACT: 2016.03

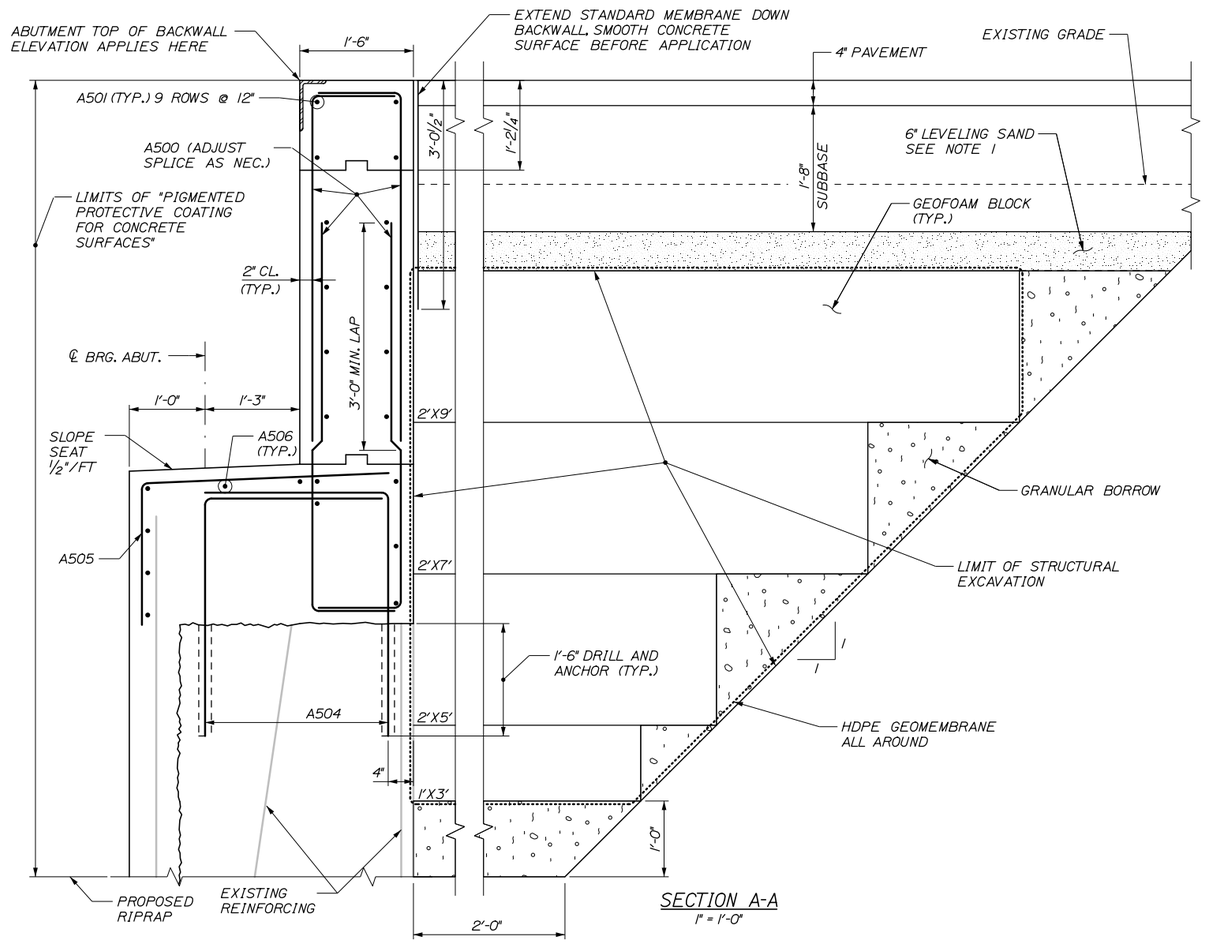

SECTION A-A
1" = 1'-0"

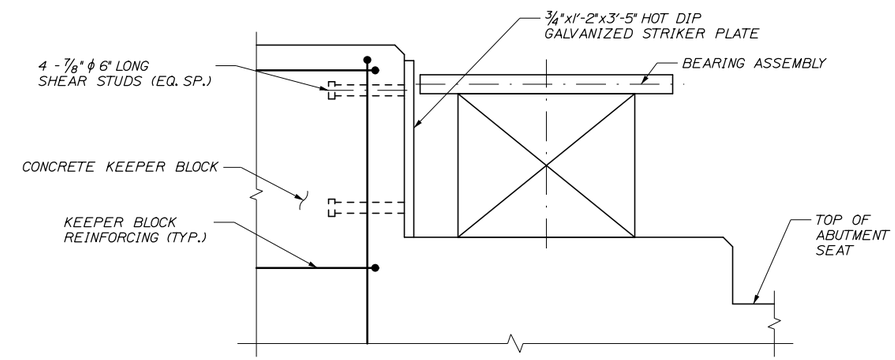

DETAIL A
2" = 1'-0"

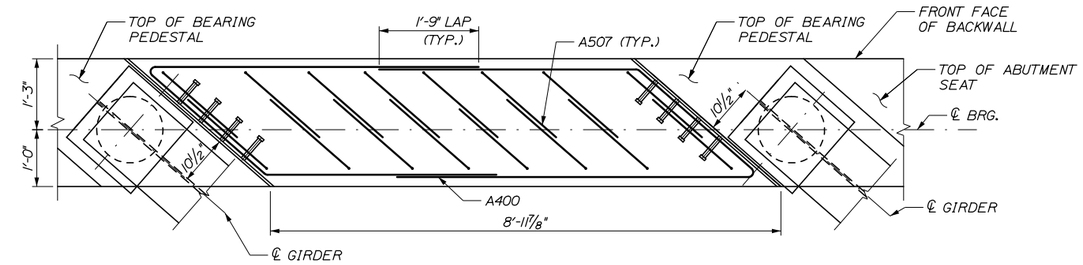

PLAN

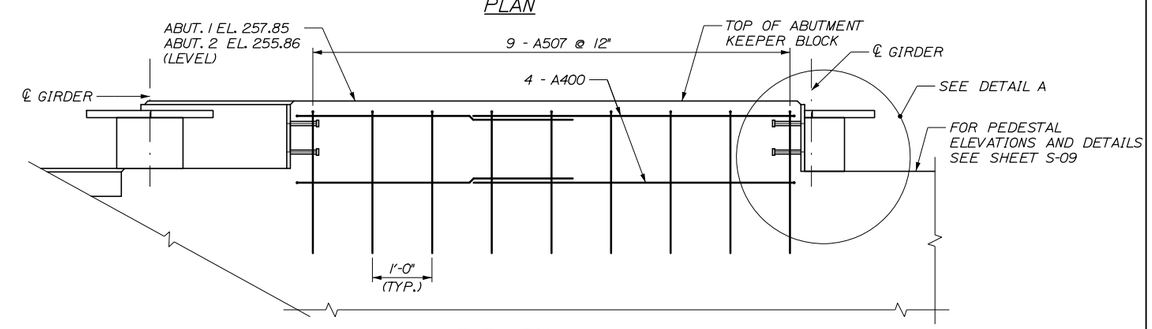

ELEVATION
KEEPER BLOCK - ABUTMENT
(ABUTMENT 1 SHOWN ABUTMENT 2 SIMILAR)
¾" = 1'-0"

NOTE:
ABUTMENT REINFORCING NOT SHOWN.

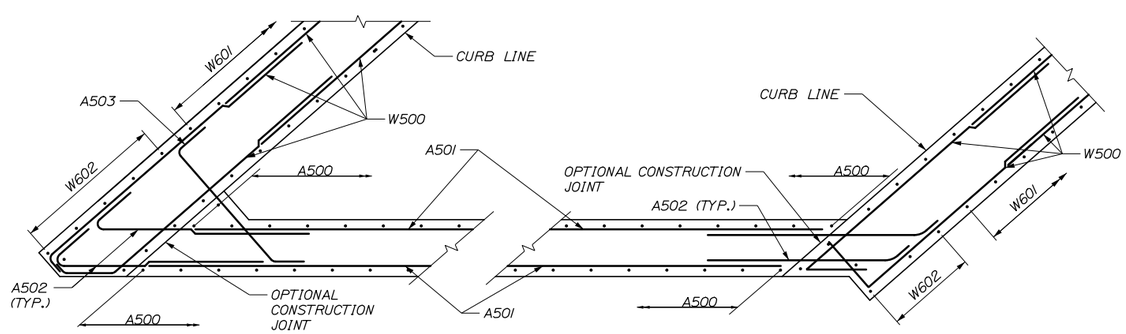

SECTION B-B
½" = 1'-0"

NOTE:
1. SAND SHALL BE PLACED LEVEL, SMOOTH AND COMPACTED TO NOT LESS THAN 95% MAX DRY DENSITY USING MULTIPLE PASSES OF VIBRATORY PLATE COMPACTOR.

Date:12/23/2015

Filename: 042_Abutment Modification Details.dgn

Scale:			
No.	Revision	By	Date

Designed by: HNTB

CONSULTANT PROJECT MANAGER: Dale A. Mitchell, P.E.

	By	Date		By	Date
Designed	GLS	11/15	Checked	KEB	11/15
Drawn	PEB	11/15	In Charge of	RAL	11/15

HNTB CORPORATION
340 County Road, Suite 6-C
Westbrook, ME 04092
TEL (207) 774-5155
FAX (207) 228-0909

MAINE TURNPIKE

THE GOLD STAR MEMORIAL HIGHWAY

MTA PROJECT MANAGER: Ralph C. Norwood IV, P.E., P.T.O.E.

BRIDGE SUPERSTRUCTURE REPLACEMENT
SMALL ROAD UNDERPASS

ABUTMENT MODIFICATION DETAILS

SHEET NUMBER: S-10

CONTRACT:2016.03

NOTE:
1. SEE SHEET S-12 FOR SECTION C-C.

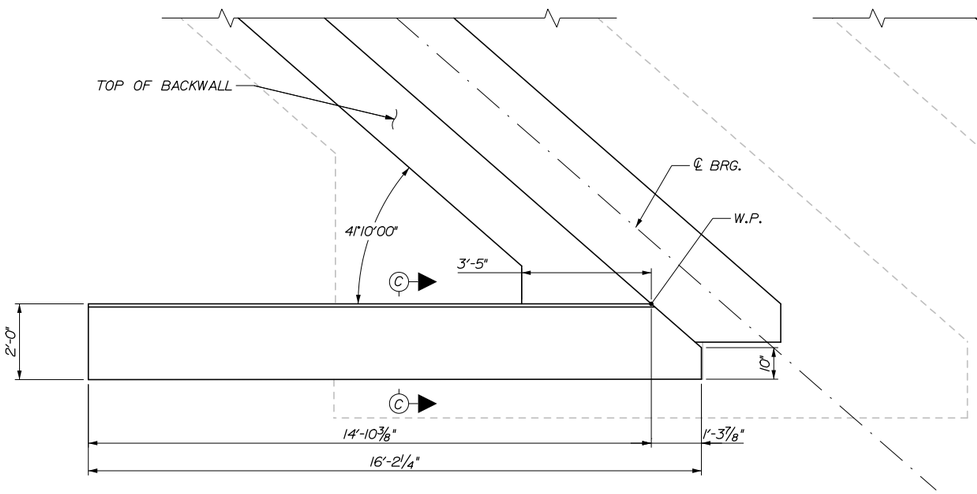

WINGWALL 1E & 2W PLAN
½" = 1'-0"

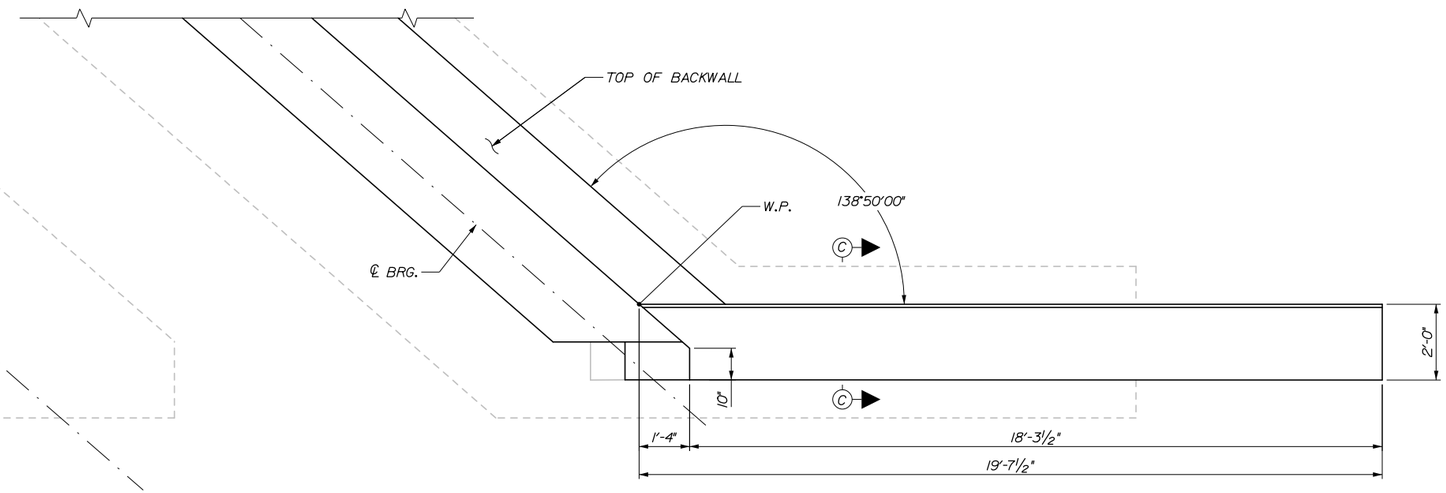

WINGWALL 1W & 2E PLAN
½" = 1'-0"

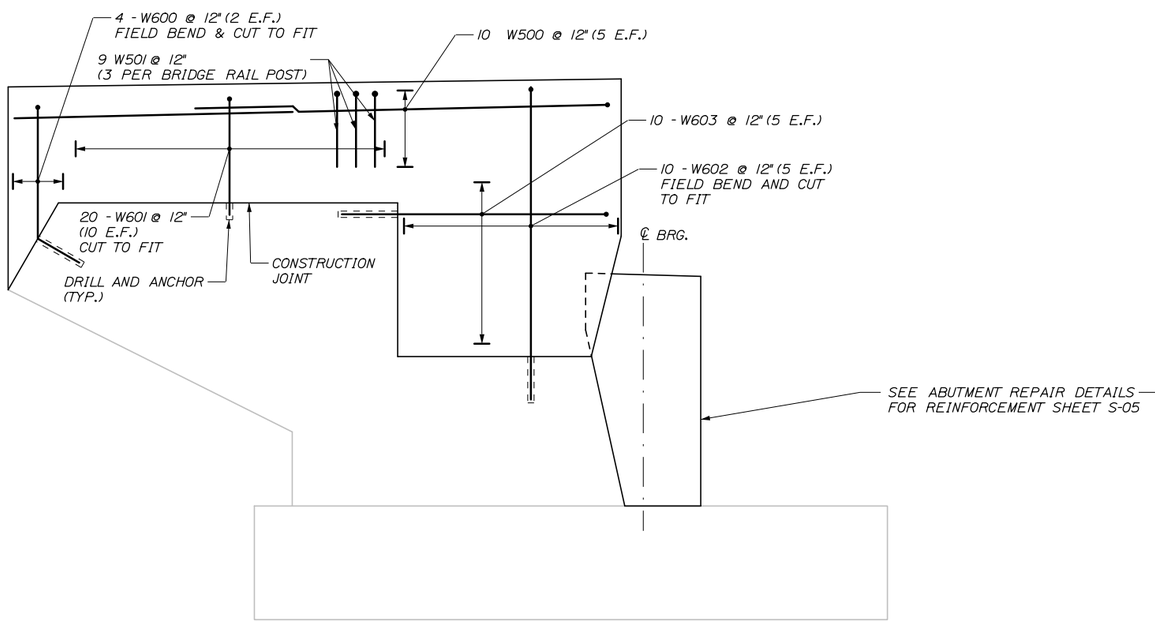

WINGWALL 1E & 2W ELEVATION
½" = 1'-0"

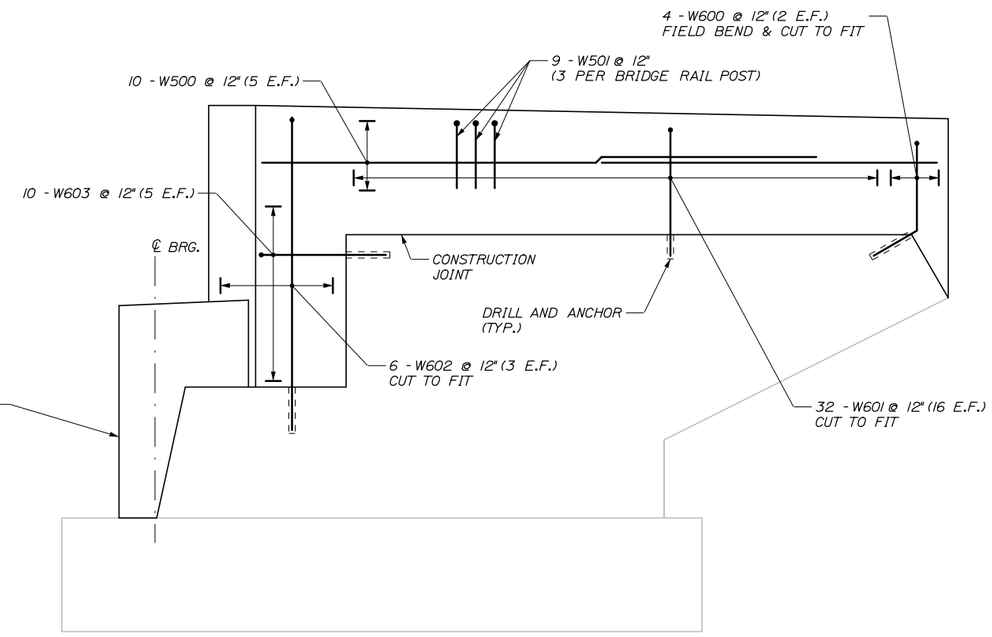

WINGWALL 1W & 2E ELEVATION
½" = 1'-0"

Date:12/23/2015

Filename: 043_Wingwall Modification Details 1.dgn

Scale:

No.	Revision	By	Date

Designed by:

HNTB

CONSULTANT PROJECT MANAGER: Dale A. Mitchell, P.E.

	By	Date		By	Date
Designed	GLS	11/15	Checked	KEB	11/15
Drawn	PEB	11/15	In Charge of	RAL	11/15

HNTB CORPORATION
340 County Road, Suite 6-C
Westbrook, ME 04092
TEL (207) 774-5155
FAX (207) 228-0909

MAINE TURNPIKE

THE GOLD STAR MEMORIAL HIGHWAY

MTA PROJECT MANAGER: Ralph C. Norwood IV, P.E., P.T.O.E.

BRIDGE SUPERSTRUCTURE REPLACEMENT
SMALL ROAD UNDERPASS

WINGWALL MODIFICATION DETAILS 1

SHEET NUMBER: S-11

CONTRACT:2016.03

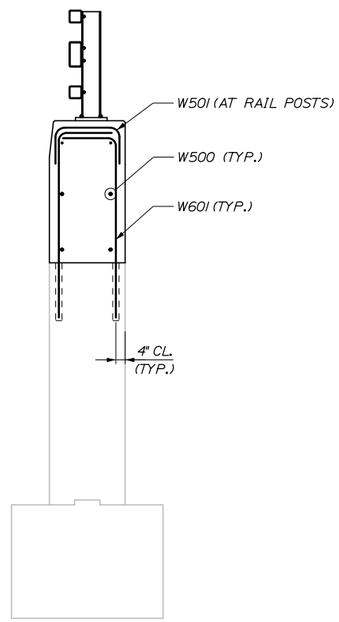

SECTION C-C
1/2" = 1'- 0"

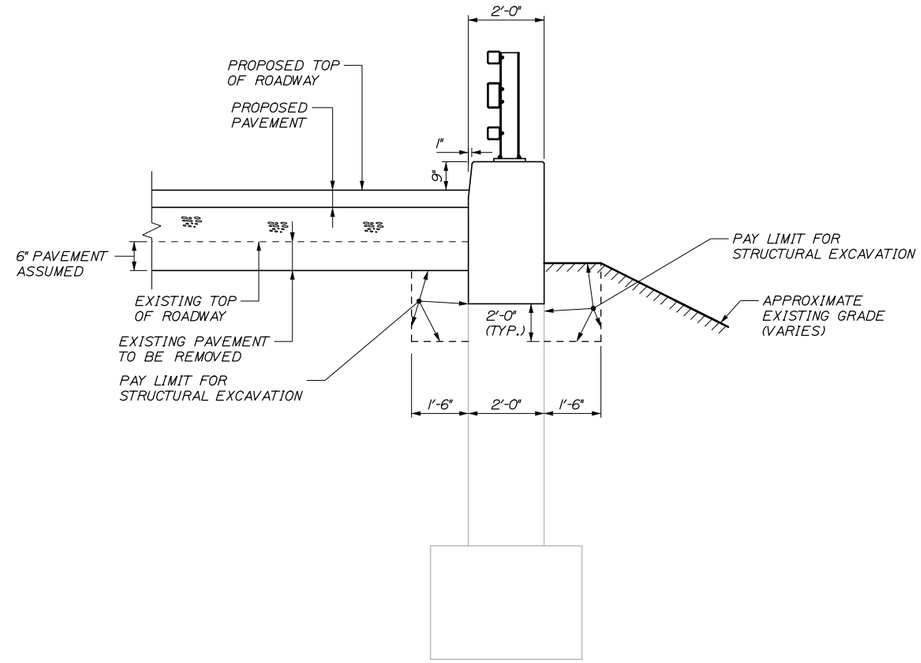

TYPICAL SECTION
1/2" = 1'- 0"

Date:12/23/2015

Filename: 044_Wingwall Modification Details 2.dgn

Scale:			
No.	Revision	By	Date

Designed by:

HNTB

CONSULTANT PROJECT MANAGER: Dale A. Mitchell, P.E.

	By	Date		By	Date
Designed	GLS	11/15	Checked	KEB	11/15
Drawn	PEB	11/15	In Charge of	RAL	11/15

HNTB CORPORATION
340 County Road, Suite 6-C
Westbrook, ME 04092
TEL (207) 774-5155
FAX (207) 228-0909

MAINE TURNPIKE

THE GOLD STAR MEMORIAL HIGHWAY

MTA PROJECT MANAGER: Ralph C. Norwood IV, P.E., P.T.O.E.

BRIDGE SUPERSTRUCTURE REPLACEMENT
SMALL ROAD UNDERPASS

WINGWALL MODIFICATION DETAILS II

SHEET NUMBER: S-12

CONTRACT:2016.03

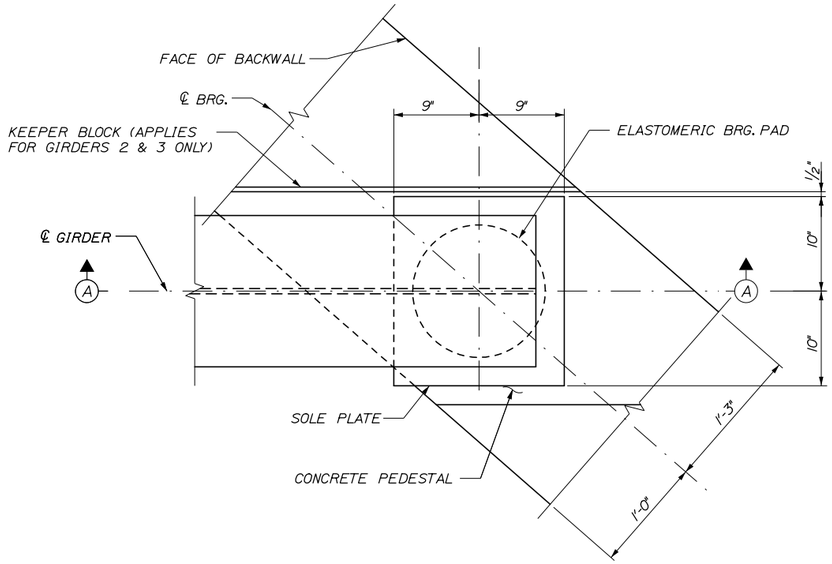

PLAN

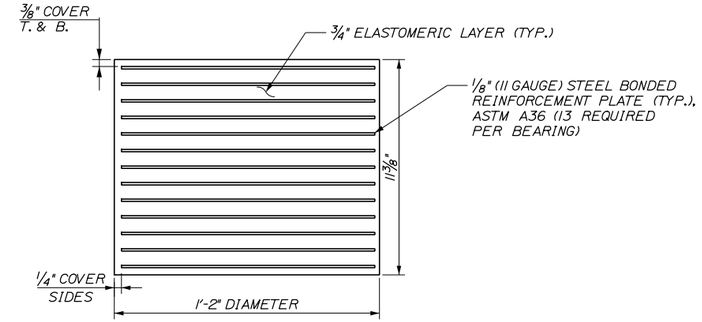

ABUTMENT ELASTOMERIC BEARING PAD
(8 REQUIRED)
3" = 1'- 0"

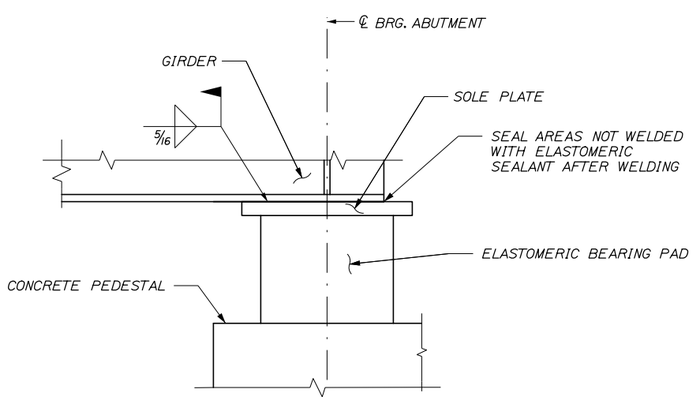

SECTION A-A

ABUTMENT BEARING
1 1/2" = 1'- 0"

BEARING NOTES:

1. ELASTOMER SHALL BE 100% POLYCHLOROPRENE (NEOPRENE), GRADE 3, MEETING THE REQUIREMENTS OF AASHTO M251. ANTIOZANANT ADDITIVES ARE PROHIBITED. THE ELASTOMER SHALL HAVE A SHEAR MODULUS OF 140 PSI.

2. VULCANIZING OF THE ELASTOMER TO THE SOLE PLATE SHALL BE DONE DURING THE PRIMARY MOLD PROCESS.

3. ANCHOR RODS SHALL BE SET BEFORE INSTALLING STRUCTURAL STEEL.

4. UPSET THE THREADS ON THE ANCHOR RODS AFTER ASSEMBLY.

5. SOLE PLATES SHALL MEET THE REQUIREMENTS OF ASTM A 709, GRADE 50 OR 50W.

6. BEARINGS SHALL BE COVERED DURING TRANSIT.

7. ALL EXPOSED STEEL COMPONENTS SHALL BE HOT DIP GALVANIZED AFTER STEEL FABRICATION IN ACCORDANCE WITH ASTM A123 AND ASTM A153 AS APPLICABLE.

8. ALL BEARINGS SHALL BE MARKED PRIOR TO SHIPPING. THE MARKS SHALL INCLUDE THE BEARING LOCATION ON THE BRIDGE, AND A DIRECTION ARROW THAT POINTS UP-STATION. ALL MARKS SHALL BE PERMANENT AND SHALL BE VISIBLE AFTER THE BEARING IS INSTALLED.

9. ALL PRECAUTIONS NECESSARY SHALL BE TAKEN TO PROTECT BEARING COMPONENTS FROM FIELD WELD FLASH AND SPATTER. WELDING PROCEDURES SHALL BE ESTABLISHED BY THE CONTRACTOR TO RESTRICT THE MAXIMUM TEMPERATURE OF STEEL ADJACENT TO THE ELASTOMER TO 200°F THROUGH USE OF TEMPERATURE INDICATING CRAYONS OR OTHER SUITABLE MEANS.

10. CONTRACTOR SHALL RE-FINISH GALVANIZING IN ACCORDANCE WITH ASTM A780 AFTER FIELD WELDING.

11. BEARING PADS WERE DESIGNED USING "METHOD B" FROM THE AASHTO LRFD SPECIFICATION AND SHALL BE SUBSEQUENTLY TESTED IN ACCORDANCE WITH THE SPECIFICATION.

12. ALL STEEL REINFORCEMENT PLATES SHALL MEET THE REQUIREMENTS OF ASTM A36 UNLESS OTHERWISE NOTED AND SHALL BE DEBURRED PRIOR TO MOLDING THE BEARING.

13. ANCHOR RODS SHALL BE SWEDGED OR THREADED ON THE EMBEDDED PORTION.

14. ANCHOR ROD EMBEDMENT SHALL BE MEASURED FROM TOP OF PIER CAP OR ABUTMENT SEAT, NOT INCLUDING DEPTH OF PEDESTAL.

15. THE BEARINGS ARE DESIGNED SO THAT THE SUPERSTRUCTURE MAY BE ERECTED WHEN THE AMBIENT AIR TEMPERATURE IS WITHIN THE RANGE OF 35°F AND 80°F.

16. CONTRACTOR SHALL AVOID DAMAGING EXISTING REINFORCING DURING INSTALLATION OF ANCHOR RODS AT ALL PIERS.

17. ALL HEAVY ROOFING FELT SHALL BE SMOOTH SURFACED ASPHALT ROOFING (ORGANIC FELT) CONFORMING TO ASTM D6380, CLASS S, TYPE III (51.1 lb/100 ft²)

BEARING DESIGN CRITERIA		
CRITERIA	ABUTMENTS	PIERS
UNFACTORED DEAD LOAD	34.4 KIPS	115.7 KIPS
UNFACTORED LIVE LOAD	63.2 KIPS	107.4 KIPS
MAX. LONGITUDINAL DISPL.	1.18 INCHES	0.65 INCHES
ROTATIONAL TOLERANCE	0.005 RAD	0.005 RAD
DEAD LOAD ROTATION	0.0062 RAD	0.0032 RAD
MAX. LIVE LOAD ROTATION	0.0026 RAD	0.0020 RAD

Date:12/23/2015

Filename: 045_Bearing Details 1.dgn

Scale:

No.	Revision	By	Date

Designed by: HNTB

CONSULTANT PROJECT MANAGER: Dale A. Mitchell, P.E.

	By	Date		By	Date
Designed	GLS	11/15	Checked	KEB	11/15
Drawn	PEB	11/15	In Charge of	RAL	11/15

HNTB CORPORATION
340 County Road, Suite 6-C
Westbrook, ME 04092
TEL (207) 774-5155
FAX (207) 228-0909

MAINE TURNPIKE

THE GOLD STAR MEMORIAL HIGHWAY

MTA PROJECT MANAGER: Ralph C. Norwood IV, P.E., P.T.O.E.

BRIDGE SUPERSTRUCTURE REPLACEMENT
SMALL ROAD UNDERPASS

BEARING DETAILS I

SHEET NUMBER: S-13

CONTRACT:2016.03

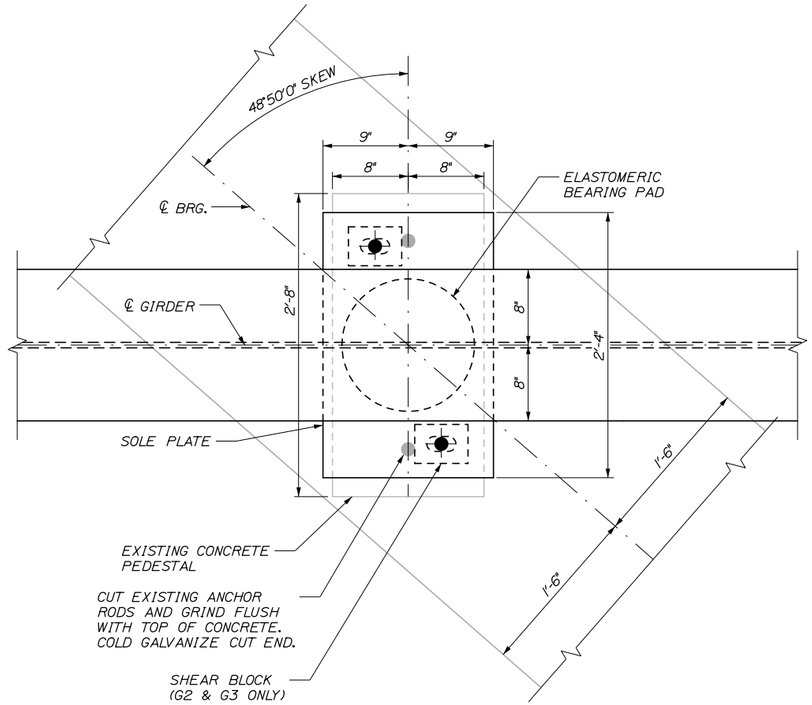

PLAN

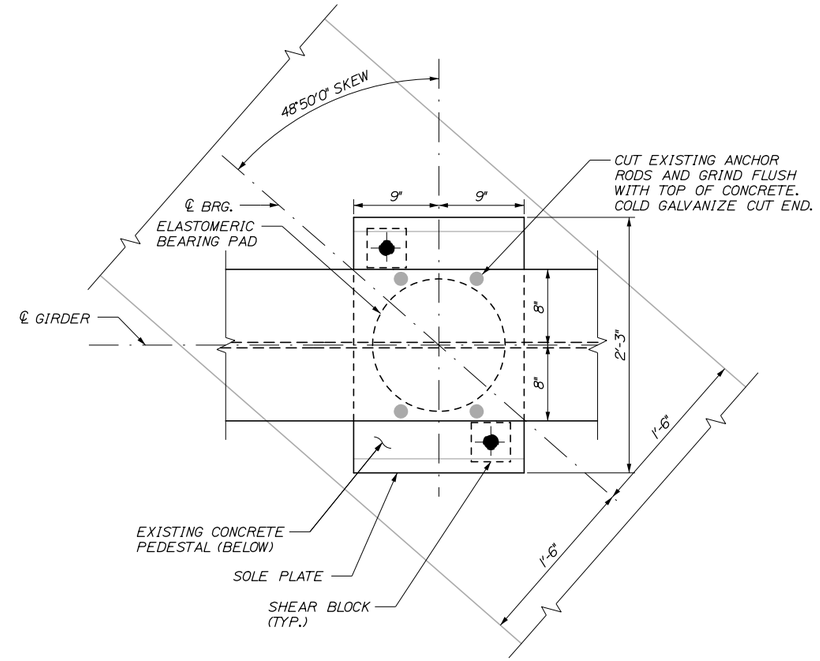

PLAN

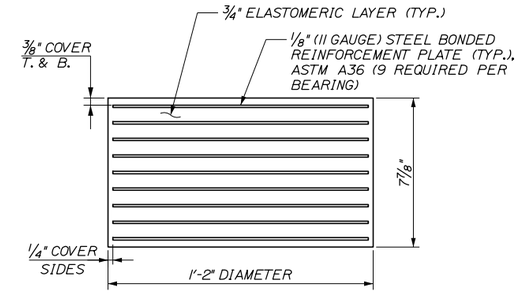

PIER ELASTOMERIC BEARING PAD
(12 REQUIRED)
3" = 1'- 0"

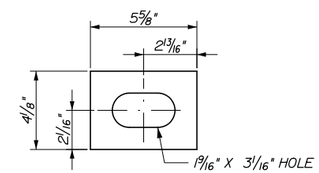

SHEAR BLOCK - PIERS 1 & 3 (G2 & G3 ONLY)
3" = 1'- 0"

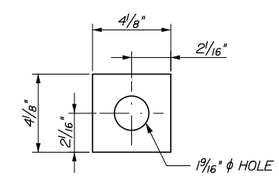

SHEAR BLOCK - PIER 2
3" = 1'- 0"

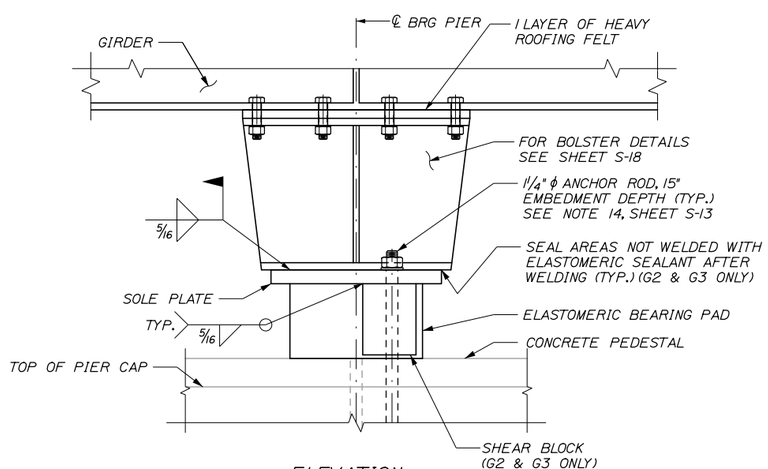

ELEVATION

EXPANSION BEARING ASSEMBLY - PIERS 1 & 3
(8 REQUIRED)
1 1/2" = 1'- 0"

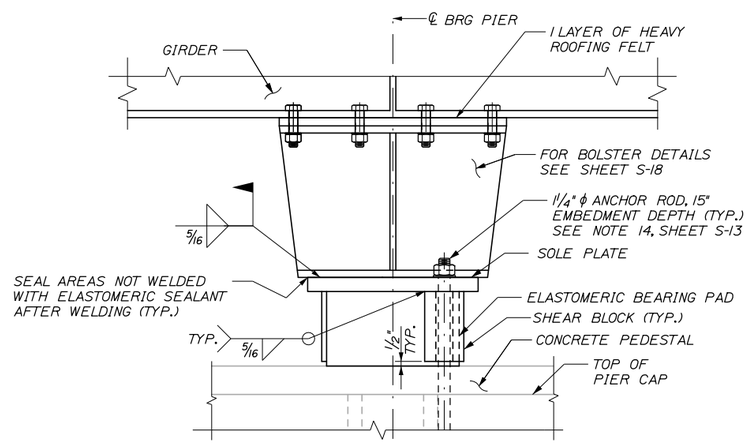

ELEVATION

FIXED BEARING ASSEMBLY - PIER 2
(4 REQUIRED)
1 1/2" = 1'- 0"

Date:12/23/2015

Filename: 046_Bearing Details 2.dgn

Scale:

No.	Revision	By	Date

Designed by:

HNTB

CONSULTANT PROJECT MANAGER: Dale A. Mitchell, P.E.

	By	Date		By	Date
Designed	GLS	11/15	Checked	KEB	11/15
Drawn	PEB	11/15	In Charge of	RAL	11/15

HNTB CORPORATION
340 County Road, Suite 6-C
Westbrook, ME 04092
TEL (207) 774-5155
FAX (207) 228-0909

MAINE TURNPIKE

THE GOLD STAR MEMORIAL HIGHWAY

MTA PROJECT MANAGER: Ralph C. Norwood IV, P.E., P.T.O.E.

BRIDGE SUPERSTRUCTURE REPLACEMENT
SMALL ROAD UNDERPASS

BEARING DETAILS II

SHEET NUMBER: S-14

CONTRACT:2016.03

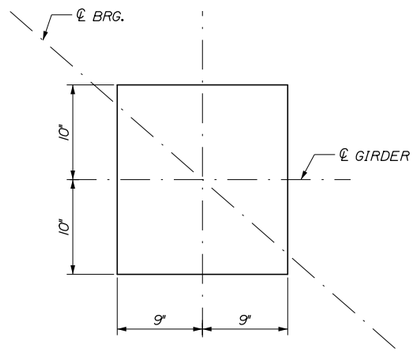

SOLE PLATE
ABUTMENTS
1 1/2" = 1'-0"

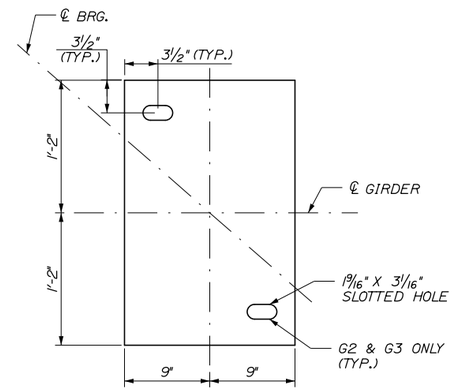

SOLE PLATE
PIERS 1 & 3
1 1/2" = 1'-0"

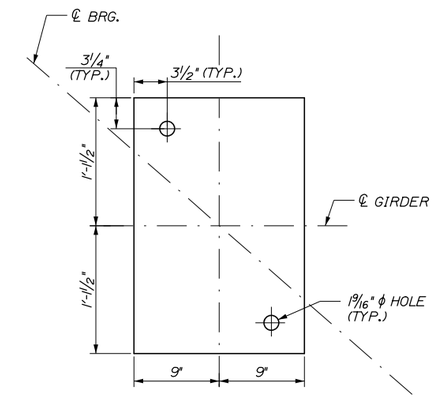

SOLE PLATE
PIER 2
1 1/2" = 1'-0"

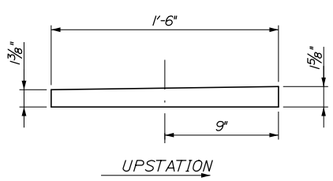

ELEVATION
ABUT. 1 - SOLE ℙ
N.T.S.

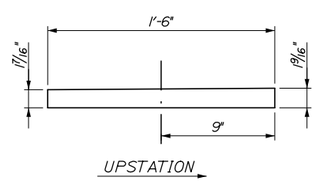

ELEVATION
PIER 1 - SOLE ℙ
N.T.S.

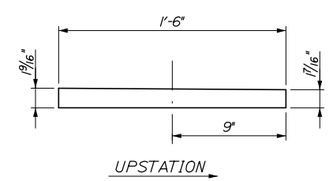

ELEVATION
PIER 2 - SOLE ℙ
N.T.S.

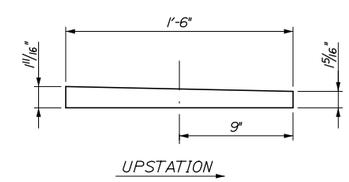

ELEVATION
PIER 3 - SOLE ℙ
N.T.S.

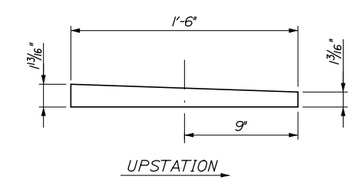

ELEVATION
ABUT. 2 - SOLE ℙ
N.T.S.

Date:12/23/2015

Filename: 047_Bearing Details 3.dgn

Scale:			
No.	Revision	By	Date

Designed by:

HNTB

CONSULTANT PROJECT MANAGER: Dale A. Mitchell, P.E.

	By	Date		By	Date
Designed	GLS	11/15	Checked	KEB	11/15
Drawn	PEB	11/15	In Charge of	RAL	11/15

HNTB CORPORATION
340 County Road, Suite 6-C
Westbrook, ME 04092
TEL (207) 774-5155
FAX (207) 228-0909

MAINE TURNPIKE

THE GOLD STAR MEMORIAL HIGHWAY

MTA PROJECT MANAGER: Ralph C. Norwood IV, P.E., P.T.O.E.

BRIDGE SUPERSTRUCTURE REPLACEMENT
SMALL ROAD UNDERPASS

BEARING DETAILS III

SHEET NUMBER: S-15

CONTRACT:2016.03

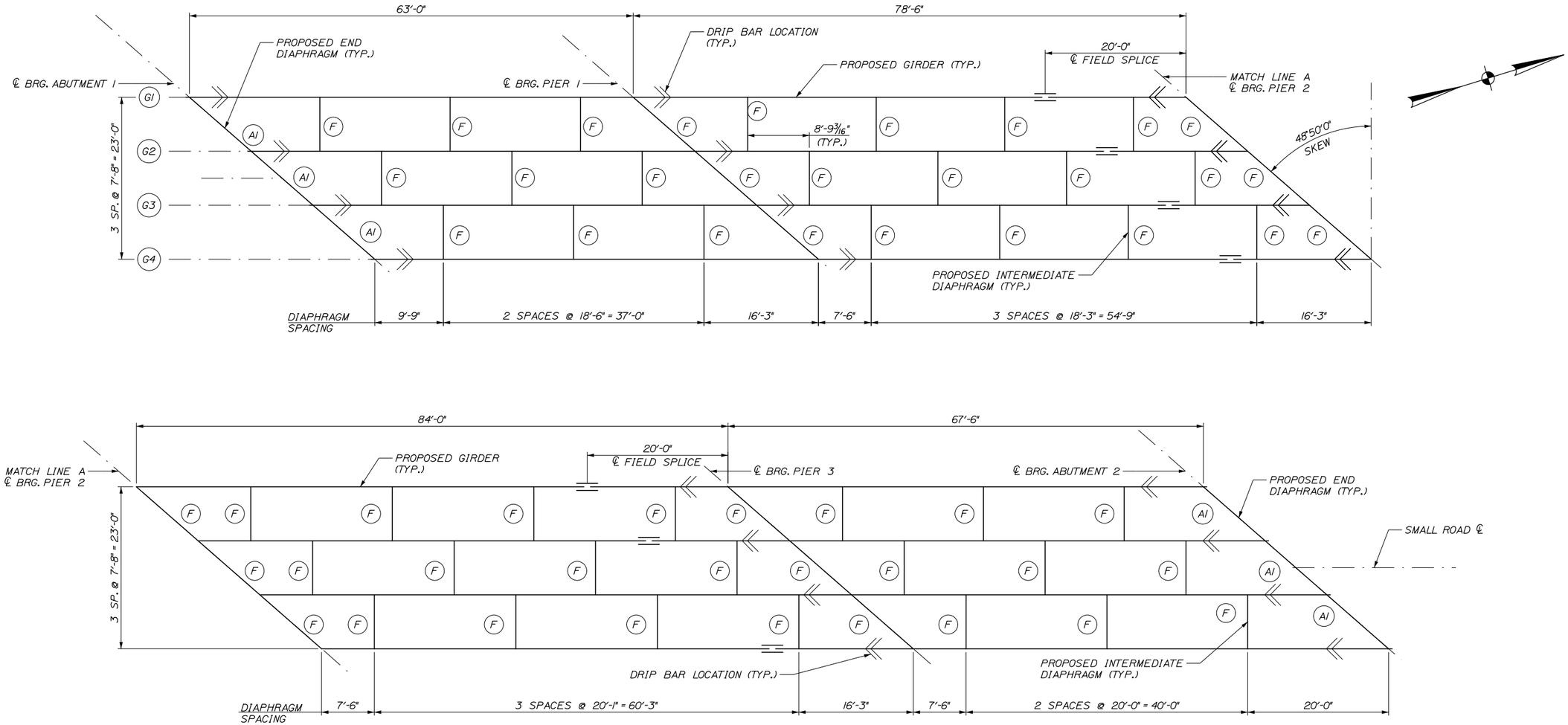

FRAMING PLAN

1/8" = 1'-0"

STRUCTURAL STEEL NOTES:

1. CAMBER ORDINATES AS SHOWN ARE COMPUTED TO COMPENSATE FOR ALL DEAD LOAD DEFLECTIONS AND FOR THE CURVATURE OF THE FINISHED GRADE PROFILE.

2. NO TRANSVERSE BUTT-WELD SPLICES WILL BE ALLOWED IN THE FLANGE PLATES OR WEB PLATES WITHIN 10 FT OR 10% OF THE SPAN LENGTH (WHICHEVER IS GREATER) FROM THE POINTS OF MAXIMUM NEGATIVE MOMENT OR MAXIMUM POSITIVE MOMENT. BUTT-WELD SPLICES IN FLANGES SHALL BE NOT LESS THAN 3 FEET FROM TRANSVERSE BUTT-WELDS IN THE WEB PLATES AND NO TRANSVERSE WEB OR FLANGE WELDS SHALL BE LOCATED WITHIN 3 FEET OF OTHER TRANSVERSE WELDS (E.G. CONNECTION PLATES TO WEB WELDS) ON EITHER FLANGE OR WEB.

3. SECTIONS OF FLANGE PLATES OR WEB PLATES BETWEEN TRANSVERSE SHOP SPLICES OR BETWEEN A TRANSVERSE SHOP SPLICE AND A FIELD SPLICE SHALL BE NOT LESS THAN 20 FEET IN LENGTH UNLESS OTHERWISE SHOWN ON THE PLANS.

4. BEARING STIFFENERS SHALL BE PLUMB AFTER ERECTION AND DEAD LOADING OF THE STRUCTURE.

5. ALL BOLTS SHALL BE 7/8" HIGH STRENGTH BOLTS. HOLES SHALL BE 15/16" UNLESS OTHERWISE NOTED. BOLTS SHALL BE INSTALLED WITH HEADS DOWN AT ALL BOTTOM FLANGE CONNECTIONS AND HEADS UP AT ALL TOP FLANGE CONNECTIONS.

6. DIAPHRAGM CONNECTION PLATES MAY BE EITHER PLUMB OR NORMAL TO THE TOP FLANGE.

7. BUTT WELDS AT WEB SPLICES AND FLANGE SPLICES SHALL BE GROUND FLUSH IN LONGITUDINAL DIRECTION OF GIRDER.

8. SHEAR STUDS SHALL EXTEND A MINIMUM OF 2" INTO THE SLAB. SEE "SHEAR CONNECTOR DETAIL" ON SHEET S-17.

9. USE A SINGLE ROW OF SHEAR STUDS ON SPLICE PLATES TO AVOID INTERFERENCE WITH SPLICE BOLTS.

10. CONNECTION PLATES SHALL BE FULL WEB DEPTH AND WELDED TO THE WEB AND FLANGES ON BOTH SIDES OF THE PLATES. WELDS SHALL TERMINATE 1/2" ± 1/8" FROM THE ENDS OF THE PLATES.

11. PRIOR TO ERECTION OF STRUCTURAL STEEL THE CONTRACTOR SHALL SUBMIT A DETAILED ERECTION PLAN FOR APPROVAL.

12. BEARING STIFFENERS SHALL BE MILL-TO-BEAR ON THE BOTTOM FLANGE AND TIGHT FIT TO THE TOP FLANGE. BEARING STIFFENERS USED AS CONNECTION PLATES SHALL BE DETAILED AS CONNECTION PLATES. BEARING STIFFENERS USED ON BOLSTERS SHALL BE MILL-TO-BEAR ON THE TOP AND BOTTOM FLANGE.

13. FOR DETAILS OF DIAPHRAGMS TYPES (AI) & (F), SEE MAINEDOT STANDARD DETAILS, PAGES 504(01) AND 504(22).

14. ALL FAYING SURFACES, WITH THE EXCEPTION OF FIELD SPLICES, SHALL BE PAINTED OR SEALED IN ACCORDANCE WITH FHWA TECHNICAL ADVISORY T5140.22, SECTION 4.c.2.c. TO PREVENT THE FORMATION OF PACK RUST.

15. ALL PORTIONS OF THE STRUCTURAL STEEL THAT WILL REMAIN UNPAINTED SHALL BE BLAST-CLEANED TO SSPC SP-6/NACE NO. 3 AFTER FABRICATION AND PRIOR TO DELIVERY IN ORDER TO PRESENT A UNIFORM APPEARANCE FREE OF DIRT, OIL, OR OTHER FOREIGN MATERIALS.

16. CHANGES IN FIELD SPLICE FILLER PLATE THICKNESS TO COMPENSATE FOR FABRICATION TOLERANCES SHALL BE APPROVED BY THE ENGINEER.

Date:12/23/2015

Filename: 048_Framing Plan.dgn

Scale:

No.	Revision	By	Date

Designed by:

HNTB

CONSULTANT PROJECT MANAGER: Dale A. Mitchell, P.E.

	By	Date		By	Date
Designed	GLS	11/15	Checked	KEB	11/15
Drawn	PEB	11/15	In Charge of	RAL	11/15

HNTB CORPORATION
340 County Road, Suite 6-C
Westbrook, ME 04092
TEL (207) 774-5155
FAX (207) 228-0909

MAINE TURNPIKE

THE GOLD STAR MEMORIAL HIGHWAY

MTA PROJECT MANAGER: Ralph C. Norwood IV, P.E., P.T.O.E.

BRIDGE SUPERSTRUCTURE REPLACEMENT
SMALL ROAD UNDERPASS

FRAMING PLAN

SHEET NUMBER: S-16

CONTRACT:2016.03

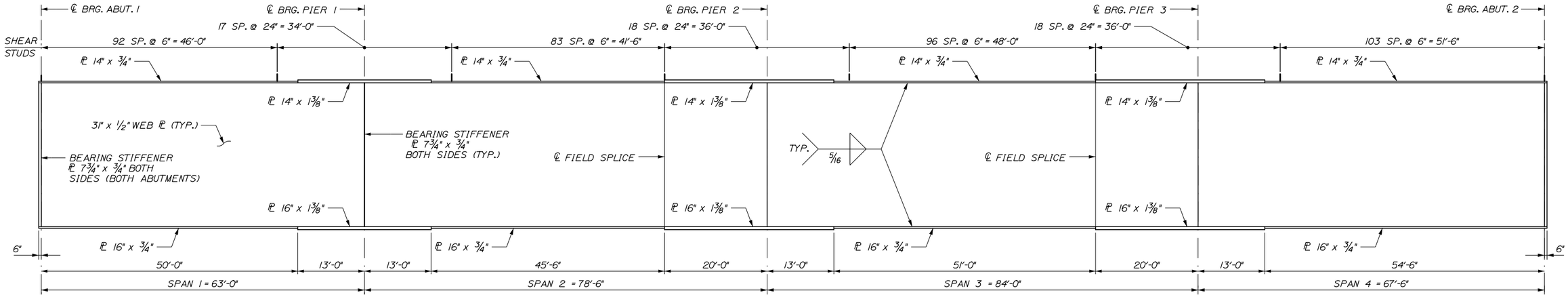

GIRDER ELEVATION

856 STUDS PER BEAM

N.T.S.

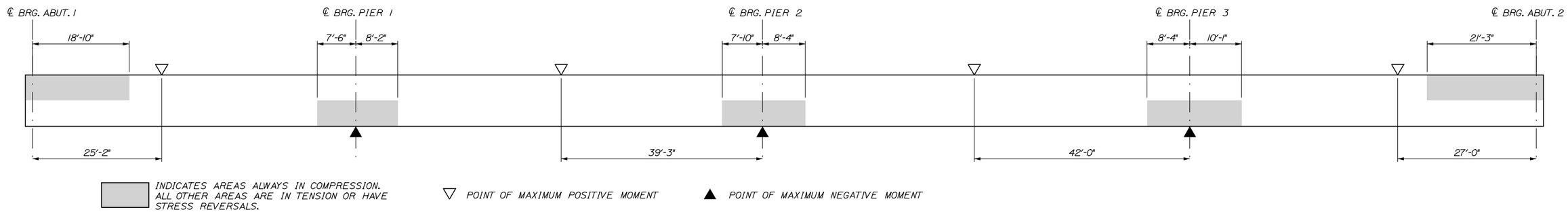

GIRDER STRESS DIAGRAM

N.T.S.

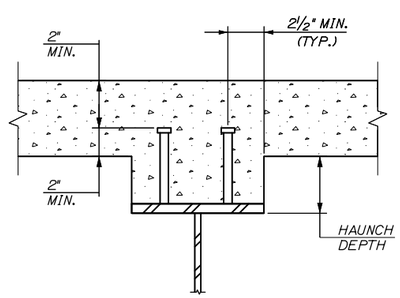

SHEAR CONNECTOR DETAIL

SHOWN WITHOUT PRECAST DECK PANELS, SEE DETAIL ON SHEET S-23 IF DECK PANELS ARE USED

1 1/2" = 1'-0"

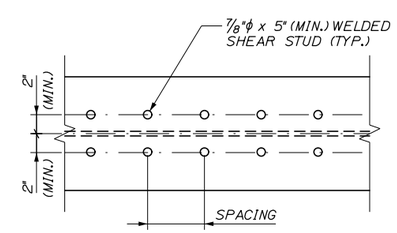

SHEAR CONNECTOR LAYOUT

1 1/2" = 1'-0"

Date:12/23/2015

Filename: 049_Structural Steel Details 1.dgn

Scale:

No.	Revision	By	Date

Designed by:

HNTB

CONSULTANT PROJECT MANAGER: Dale A. Mitchell, P.E.

	By	Date		By	Date
Designed	GLS	11/15	Checked	KEB	11/15
Drawn	PEB	11/15	In Charge of	RAL	11/15

HNTB CORPORATION
340 County Road, Suite 6-C
Westbrook, ME 04092
TEL (207) 774-5155
FAX (207) 228-0909

MAINE TURNPIKE

THE GOLD STAR MEMORIAL HIGHWAY

MTA PROJECT MANAGER: Ralph C. Norwood IV, P.E., P.T.O.E.

BRIDGE SUPERSTRUCTURE REPLACEMENT
SMALL ROAD UNDERPASS

STRUCTURAL STEEL DETAILS I

SHEET NUMBER: S-17

CONTRACT:2016.03

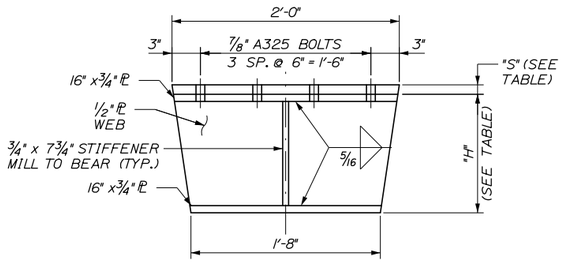

PIER BOLSTER DETAIL
1 1/2" = 1'-0"

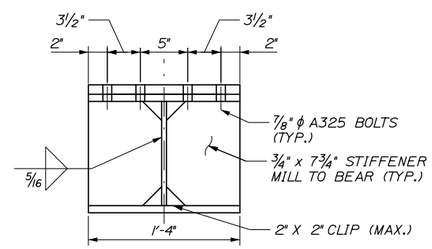

SECTION
1 1/2" = 1'-0"

BOLSTER HEIGHT "H" (INCHES)			
GIRDER	PIER 1	PIER 2	PIER 3
G1	24	18 1/2	19 1/2
G2	24	18 1/2	19 1/2
G3	24	18 1/2	17 1/2
G4	24	18 1/2	17 1/2

SHIM HEIGHT "S" (INCHES)			
GIRDER	PIER 1	PIER 2	PIER 3
G1	5/8	7/8	1 1/2
G2	3/4	5/8	1
G3	3/4	1	3/4
G4	0	1/8	1/8

BOLSTER NOTES:

1. FOR STRUCTURAL STEEL NOTES, SEE SHEET S-16.
2. BOLSTERS SHALL BE PAID FOR UNDER STRUCTURAL STEEL PAY ITEMS.
3. CONTRACTOR SHALL PROVIDE SHIM PLATES IN THE NOTED THICKNESSES AND SHALL MATCH THE TOP PLATE OF THE PIER BOLSTERS.
4. ALL BOLSTERS SHALL BE MARKED INDICATING BOLSTER LOCATION PRIOR TO SHIPPING. MARK SHALL BE VISIBLE AFTER ERECTION.

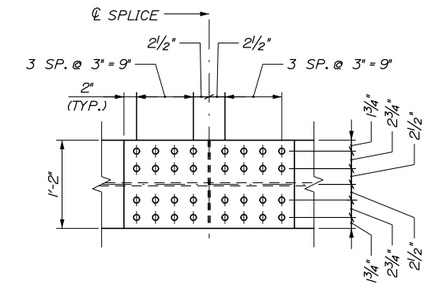

PLAN - TOP FLANGE

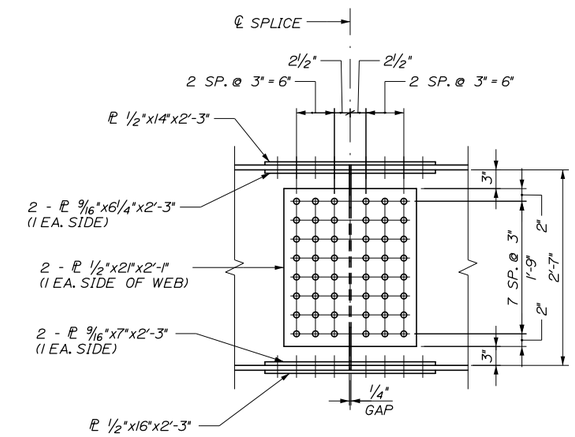

ELEVATION

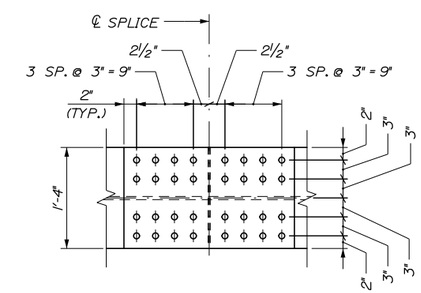

PLAN - BOTTOM FLANGE

BOLTED FIELD SPLICE
1" = 1'-0"

Date:12/23/2015

Filename: 050_Structural Steel Details 2.dgn

No.	Revision	By	Date

Scale:

Designed by:

HNTB

CONSULTANT PROJECT MANAGER: Dale A. Mitchell, P.E.

	By	Date		By	Date
Designed	GLS	11/15	Checked	KEB	11/15
Drawn	PEB	11/15	In Charge of	RAL	11/15

HNTB CORPORATION
340 County Road, Suite 6-C
Westbrook, ME 04092
TEL (207) 774-5155
FAX (207) 228-0909

MAINE TURNPIKE

THE GOLD STAR MEMORIAL HIGHWAY

MTA PROJECT MANAGER: Ralph C. Norwood IV, P.E., P.T.O.E.

BRIDGE SUPERSTRUCTURE REPLACEMENT
SMALL ROAD UNDERPASS

STRUCTURAL STEEL DETAILS II

SHEET NUMBER: S-18

CONTRACT:2016.03

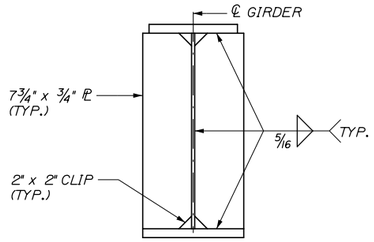

BEARING STIFFENER
1" = 1'-0"

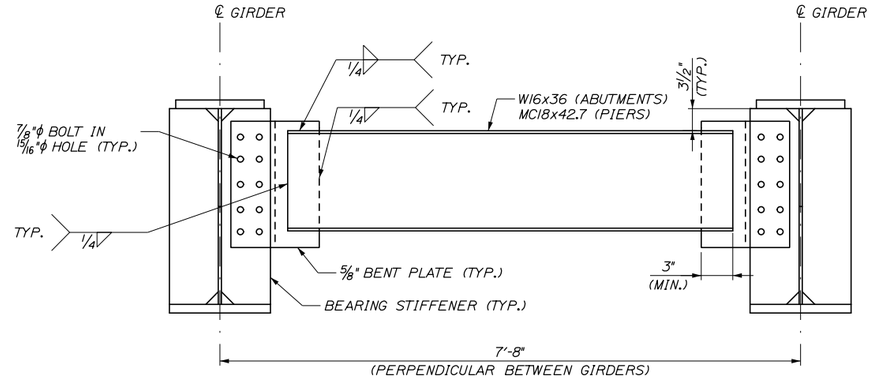

ABUTMENT AND PIER DIAPHRAGM
(TYPICAL ALL BAYS)
1" = 1'-0"

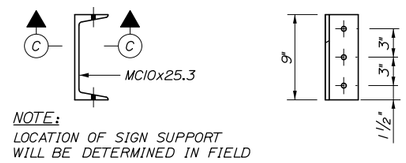

NOTE:
LOCATION OF SIGN SUPPORT WILL BE DETERMINED IN FIELD

SIGN SUPPORT
(4 REQUIRED)
1½" = 1'-0"

SECTION C-C
1½" = 1'-0"

SIGN SUPPORT DETAILS
(4 REQUIRED)
1½" = 1'-0"

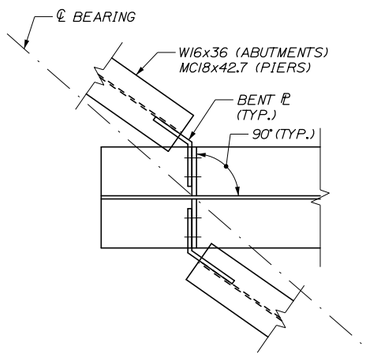

PLAN VIEW
1" = 1'-0"

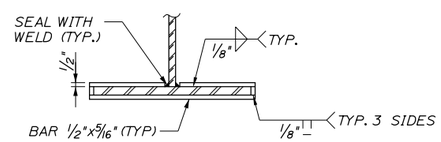

SECTION B-B
NOT TO SCALE

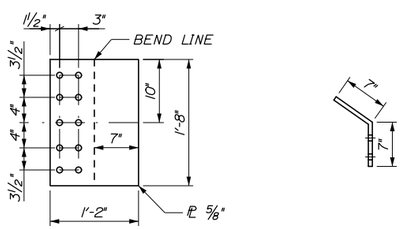

BENT PLATE DETAIL
1" = 1'-0"

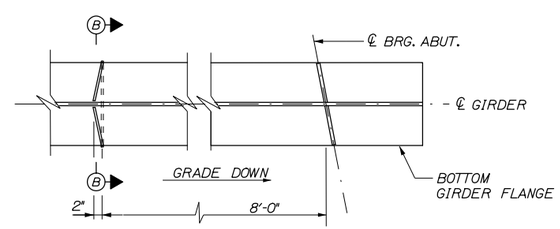

FLANGE DRIP BAR DETAIL
(ABUTMENT LOCATION SHOWN, PIER LOCATION SIMILAR)
NOT TO SCALE

SIGN SUPPORT NOTES:

1. LOCATION OF SIGN SUPPORT SHALL BE FIELD LOCATED BY THE RESIDENT.
2. BOLTS SHALL BE ½" DIAMETER A325 TYPE 3.
3. SIGN BRACKETS SHALL BE LOCATED WITHIN TWO FEET OF SIGN ENDS. BRACKET SPACING SHALL BE FIVE FEET ON CENTER MAXIMUM.
4. PRIOR TO INSTALLATION THE SIGN PANEL SHALL BE MOUNTED TO A FRAME OF SUFFICIENT RIGIDITY TO PREVENT EXCESSIVE SIGN DEFORMATIONS DUE TO WIND, ICE, AND OTHER LOADINGS THAT MAY OCCUR.
5. SIGNS SHALL BE PROVIDED BY OTHERS.
6. FABRICATION AND DELIVERY OF THE SIGN SUPPORTS SHALL BE INCIDENTAL TO PAY ITEM 504.702. REMOVAL AND INSTALLATION OF THE SIGN AND SIGN SUPPORT SHALL BE INCIDENTAL TO PAY ITEM 504.71.

Date:12/23/2015

Filename: 051_StructuralSteelDetails 3.dgn

Scale:			
No.	Revision	By	Date

Designed by:

HNTB

CONSULTANT PROJECT MANAGER: Dale A. Mitchell, P.E.

	By	Date		By	Date
Designed	GLS	11/15	Checked	KEB	11/15
Drawn	PEB	11/15	In Charge of	RAL	11/15

HNTB CORPORATION
340 County Road, Suite 6-C
Westbrook, ME 04092
TEL (207) 774-5155
FAX (207) 228-0909

MAINE TURNPIKE

THE GOLD STAR MEMORIAL HIGHWAY

MTA PROJECT MANAGER: Ralph C. Norwood IV, P.E., P.T.O.E.

BRIDGE SUPERSTRUCTURE REPLACEMENT
SMALL ROAD UNDERPASS

STRUCTURAL STEEL DETAILS III

SHEET NUMBER: S-19

CONTRACT:2016.03

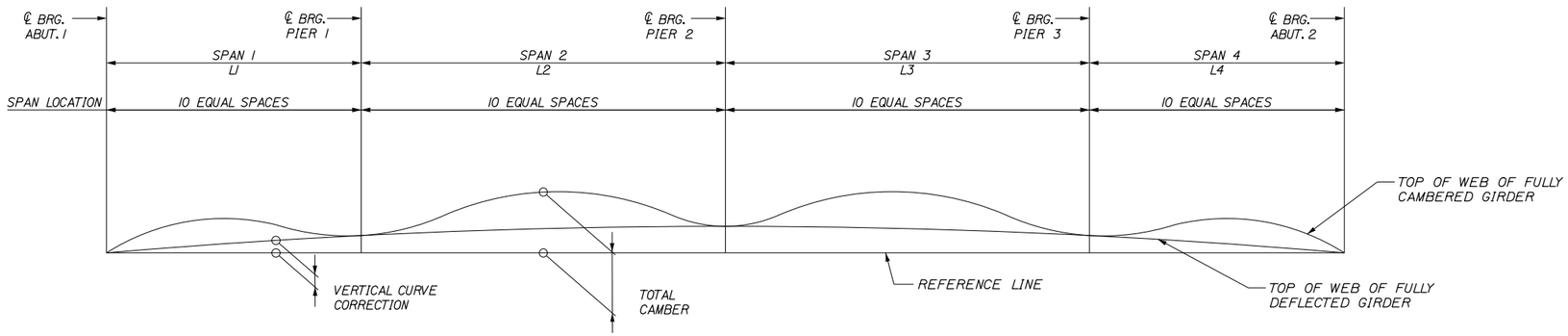

CAMBER DIAGRAM

NOT TO SCALE

CAMBER ORDINATES (FEET)																					
DESIGNATION	CL BRG. ABUT. 1	SPAN 1									CL BRG. PIER 1	SPAN 3									CL BRG. PIER 2
		0.1	0.2	0.3	0.4	0.5	0.6	0.7	0.8	0.9		0.1	0.2	0.3	0.4	0.5	0.6	0.7	0.8	0.9	
STEEL D.L.	0.000	0.004	0.006	0.008	0.010	0.008	0.007	0.005	0.002	0.001	0.000	0.001	0.003	0.006	0.008	0.008	0.008	0.006	0.003	0.001	0.000
CONCRETE D.L.	0.000	0.018	0.033	0.042	0.047	0.044	0.037	0.027	0.015	0.005	0.000	0.004	0.014	0.026	0.035	0.038	0.035	0.025	0.013	0.003	0.000
SUPERIMPOSED D.L.	0.000	0.004	0.007	0.010	0.011	0.011	0.009	0.006	0.003	0.001	0.000	0.001	0.004	0.007	0.009	0.009	0.009	0.007	0.003	0.000	0.000
VERTICAL CURVE	0.000	0.145	0.283	0.416	0.543	0.663	0.775	0.883	0.984	1.078	1.165	1.266	1.356	1.438	1.508	1.569	1.620	1.661	1.692	1.714	1.724
TOTAL	0.000	0.171	0.329	0.476	0.611	0.726	0.828	0.921	1.004	1.085	1.165	1.272	1.377	1.477	1.560	1.624	1.672	1.699	1.711	1.718	1.724

DESIGNATION	CL BRG. PIER 2	SPAN 3									CL BRG. PIER 3	SPAN 4									CL BRG. ABUT. 2
		0.1	0.2	0.3	0.4	0.5	0.6	0.7	0.8	0.9		0.1	0.2	0.3	0.4	0.5	0.6	0.7	0.8	0.9	
STEEL D.L.	0.000	0.002	0.006	0.010	0.012	0.013	0.012	0.009	0.006	0.002	0.000	0.001	0.003	0.006	0.008	0.011	0.011	0.010	0.008	0.005	0.000
CONCRETE D.L.	0.000	0.010	0.027	0.046	0.059	0.063	0.057	0.043	0.025	0.008	0.000	0.005	0.017	0.030	0.044	0.054	0.057	0.053	0.040	0.023	0.000
SUPERIMPOSED D.L.	0.000	0.002	0.007	0.012	0.014	0.016	0.014	0.011	0.007	0.002	0.000	0.001	0.004	0.007	0.011	0.013	0.014	0.012	0.009	0.005	0.000
VERTICAL CURVE	1.724	1.726	1.715	1.694	1.661	1.616	1.561	1.494	1.415	1.326	1.225	1.136	1.038	0.935	0.824	0.704	0.578	0.444	0.304	0.155	0.000
TOTAL	1.724	1.740	1.755	1.762	1.746	1.708	1.644	1.557	1.453	1.338	1.225	1.143	1.062	0.978	0.887	0.782	0.660	0.519	0.361	0.188	0.000

BOTTOM OF SLAB ELEVATIONS																					
GIRDER NO.	CL BRG. ABUT. 1	SPAN 1									CL BRG. PIER 1	SPAN 2									CL BRG. PIER 2
		0.1	0.2	0.3	0.4	0.5	0.6	0.7	0.8	0.9		0.1	0.2	0.3	0.4	0.5	0.6	0.7	0.8	0.9	
GIRDER 1	259.91	260.04	260.17	260.28	260.38	260.47	260.54	260.61	260.66	260.72	260.77	260.83	260.90	260.95	261.00	261.02	261.03	261.02	261.00	260.97	260.94
GIRDER 2	260.23	260.35	260.47	260.58	260.67	260.75	260.81	260.87	260.91	260.95	261.00	261.05	261.11	261.15	261.18	261.20	261.20	261.18	261.14	261.10	261.06
GIRDER 3	260.37	260.49	260.60	260.70	260.78	260.85	260.90	260.95	260.99	261.02	261.05	261.10	261.14	261.18	261.20	261.20	261.19	261.16	261.11	261.06	261.01
GIRDER 4	260.35	260.45	260.55	260.64	260.71	260.77	260.82	260.86	260.89	260.91	260.94	260.97	261.00	261.02	261.03	261.03	261.00	260.96	260.90	260.84	260.78

GIRDER NO.	CL BRG. PIER 2	SPAN 3									CL BRG. PIER 3	SPAN 4									CL BRG. ABUT. 2
		0.1	0.2	0.3	0.4	0.5	0.6	0.7	0.8	0.9		0.1	0.2	0.3	0.4	0.5	0.6	0.7	0.8	0.9	
GIRDER 1	260.94	260.91	260.88	260.84	260.78	260.70	260.60	260.47	260.33	260.18	260.03	259.91	259.80	259.67	259.55	259.41	259.25	259.08	258.89	258.69	258.48
GIRDER 2	261.06	261.02	260.98	260.93	260.86	260.77	260.65	260.51	260.36	260.19	260.03	259.90	259.78	259.65	259.51	259.36	259.20	259.02	258.82	258.61	258.38
GIRDER 3	261.01	260.95	260.90	260.84	260.76	260.65	260.52	260.37	260.21	260.03	259.86	259.72	259.59	259.45	259.30	259.14	258.97	258.78	258.57	258.35	258.11
GIRDER 4	260.78	260.71	260.65	260.57	260.48	260.36	260.22	260.06	259.89	259.70	259.51	259.37	259.22	259.07	258.91	258.74	258.56	258.36	258.14	257.91	257.67

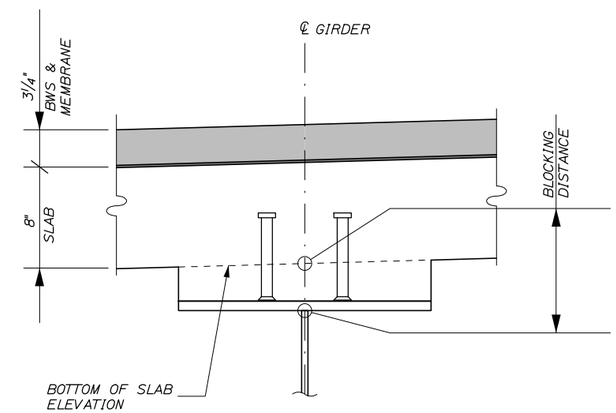

BLOCKING DETAIL

BLOCKING NOTES:

1. PRIOR TO PROFILING THE GIRDERS, THE CONTRACTOR SHALL HAVE LOWERED THE GIRDERS TO THEIR FINAL ELEVATION AND INSTALLED ALL NECESSARY DIAPHRAGMS AND/OR TEMPORARY BRACES NECESSARY TO HOLD THE GIRDERS IN THEIR FINAL PLUMB POSITION.

2. THE CONTRACTOR SHALL INSTALL THE PROTECTIVE SHIELDING AND ACCEPTABLE SAFETY LINES OR SHIELDING PRIOR TO PROFILING THE GIRDERS.

Date:12/23/2015

Filename: 052_Structural Steel Details 4.dgn

Scale:

No.	Revision	By	Date

Designed by:

HNTB

CONSULTANT PROJECT MANAGER: Dale A. Mitchell, P.E.

	By	Date		By	Date
Designed	GLS	11/15	Checked	KEB	11/15
Drawn	PEB	11/15	In Charge of	RAL	11/15

HNTB CORPORATION
340 County Road, Suite 6-C
Westbrook, ME 04092
TEL (207) 774-5155
FAX (207) 228-0909

MAINE TURNPIKE

THE GOLD STAR MEMORIAL HIGHWAY

MTA PROJECT MANAGER: Ralph C. Norwood IV, P.E., P.T.O.E.

BRIDGE SUPERSTRUCTURE REPLACEMENT
SMALL ROAD UNDERPASS

STRUCTURAL STEEL DETAILS IV

SHEET NUMBER: S-20

CONTRACT:2016.03

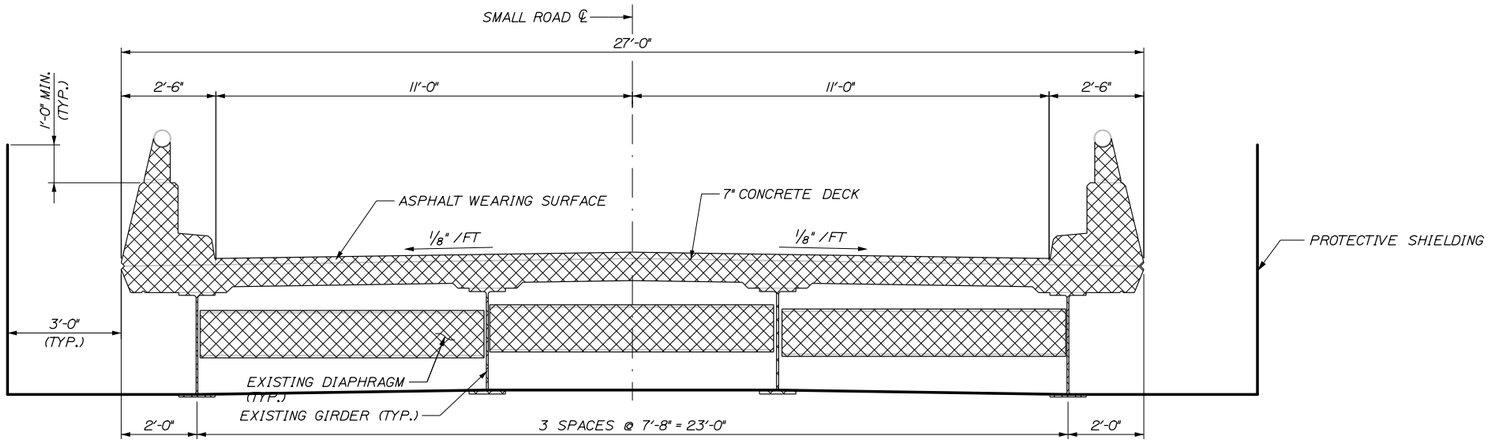

EXISTING TYPICAL SECTION

1/2" = 1'-0"

- ITEMS TO BE REMOVED

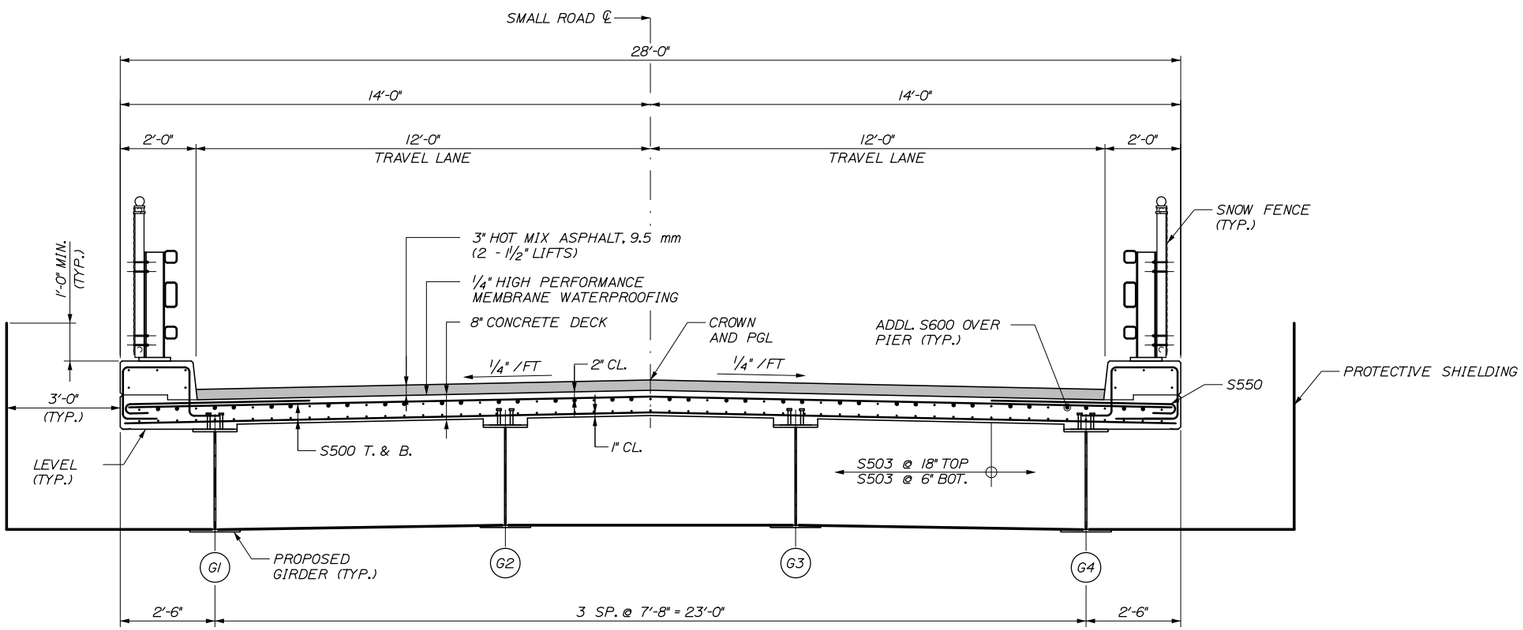

PROPOSED TYPICAL SECTION

1/2" = 1'-0"

SUPERSTRUCTURE NOTES:

1. CLEAR PROTECTIVE COATING FOR CONCRETE SURFACES SHALL BE APPLIED TO THE FOLLOWING AREAS. CURB SURFACES AND FASCIA OVERHANG TO GIRDER FLANGE.

2. ALL BRIDGE CURB CONCRETE, INCLUDING INSIDE FACES, TOP AND OUTSIDE FACES. APPROACH CURB AND DECK FASCIA SHALL HAVE A RUBBED FINISH PRIOR TO THE APPLICATION OF THE CLEAR PROTECTIVE COATING FOR CONCRETE SURFACE.

3. THE CONCRETE DECK SHALL BE GIVEN A SMOOTH BULL FLOAT OR WOOD FLOAT FINISH.

4. SHOP DRAWINGS FOR BAR CHAIRS USED WITH REINFORCING STEEL IN SLAB CONSTRUCTION, SHALL BE SUBMITTED WITH REQUIRED SPACING TO THE RESIDENT FOR APPROVAL. BAR CHAIRS SHALL BE EPOXY-COATED OR PLASTIC PROTECTED.

5. PROTECTIVE SHIELDING SHALL EXTEND LONGITUDINALLY FROM ROADSIDE FACE PIER 1 TO ROADSIDE FACE PIER 3. THE WIDTH OF THIS SHIELDING SHALL BE EQUAL TO THE TOTAL WIDTH OF THE NEW STRUCTURE PLUS THREE FEET BEYOND THE FASCIA LINES ON EACH SIDE OF THE STRUCTURE.

6. CONTRACTOR SHALL HAVE THE OPTION OF USING PRECAST, PRESTRESSED CONCRETE DECK PANELS AS AN ALTERNATIVE TO THE CONCRETE SLAB DETAILS SHOWN ON THE CONTRACT PLANS. THE REQUIREMENT SHOWN ON PAGES 502(07)-502(12) OF THE MAINE DOT STANDARD DETAILS SHALL APPLY. ALL MILD REINFORCING WITHIN THE PRECAST PANELS SHALL BE EPOXY COATED.

7. THE SUPERSTRUCTURE SLAB CONCRETE SHALL BE PLACED IN ONE CONTINUOUS OPERATION AND THE CONCRETE SLAB SHALL BE KEPT PLASTIC ONE COMPLETE SPAN BEHIND THE SPAN BEING PLACED.

8. FORM V-GROOVE ON THE FASCIA AT THE HORIZONTAL JOINT BETWEEN THE CURB AND SLAB.

9. THE APPROXIMATE SHIELDING QUANTITIES REPRESENT THE TOTAL QUANTITY OF SHIELDING REQUIRED TO COMPLETE THE WORK, INCLUDING INITIAL INSTALLATION, REMOVAL, AND RESETTING OF SHIELDING.

10. DO NOT COVER DECK DRAINS WITH WATERPROOFING MEMBRANES. DEPRESS DRAINS 1/2" BELOW TOP OF SLAB. PROVIDE 23 GAUGE GALVANIZED SCREENS (1/4" MESH) OVER DRAINS.

APPROXIMATE SHIELDING QUANTITIES*

	DEMOLITION	CONSTRUCTION	TOTAL
APPROX. WIDTH OF NEW SHIELDING INSTALLED (FT)	33 FT	34 FT	67 FT
APPROX. AREA OF SHIELDING INSTALLED (SY)	596 SY	614 SY	1210 SY

* SEE NOTES 5 AND 9

Date:12/23/2015

Filename: 053_TypSxn.dgn

Scale:

No.	Revision	By	Date

Designed by:

HNTB

CONSULTANT PROJECT MANAGER: Dale A. Mitchell, P.E.

	By	Date		By	Date
Designed	GLS	11/15	Checked	KEB	11/15
Drawn	PEB	11/15	In Charge of	RAL	11/15

HNTB CORPORATION
340 County Road, Suite 6-C
Westbrook, ME 04092
TEL (207) 774-5155
FAX (207) 228-0909

MAINE TURNPIKE

THE GOLD STAR MEMORIAL HIGHWAY

MTA PROJECT MANAGER: Ralph C. Norwood IV, P.E., P.T.O.E.

BRIDGE SUPERSTRUCTURE REPLACEMENT
SMALL ROAD UNDERPASS

TYPICAL SECTION

SHEET NUMBER: S-21

CONTRACT:2016.03

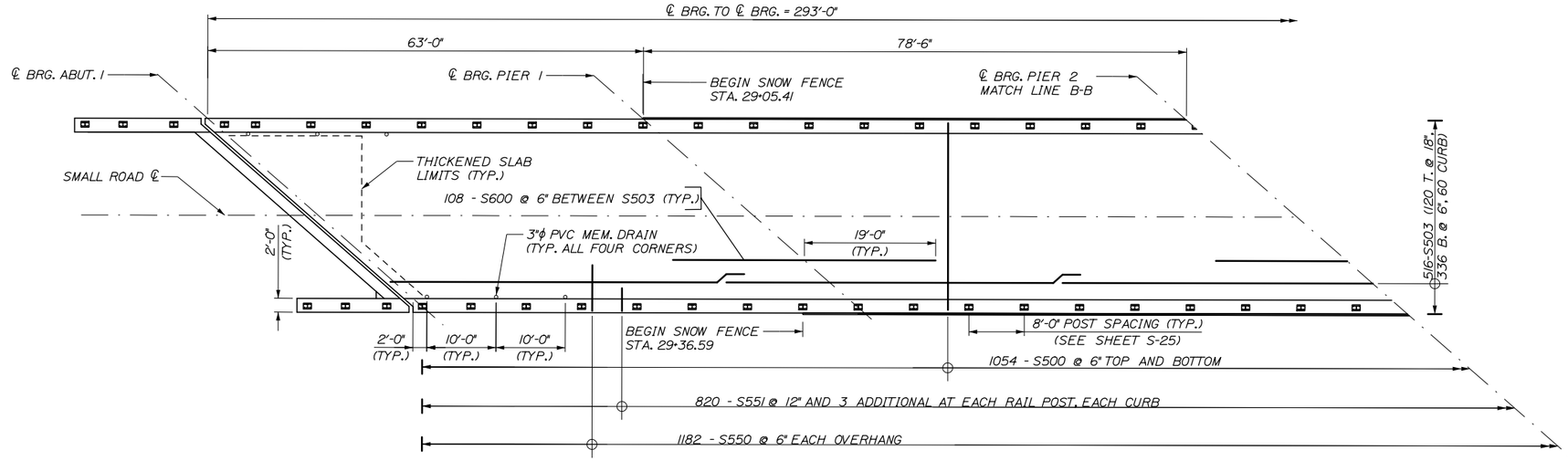

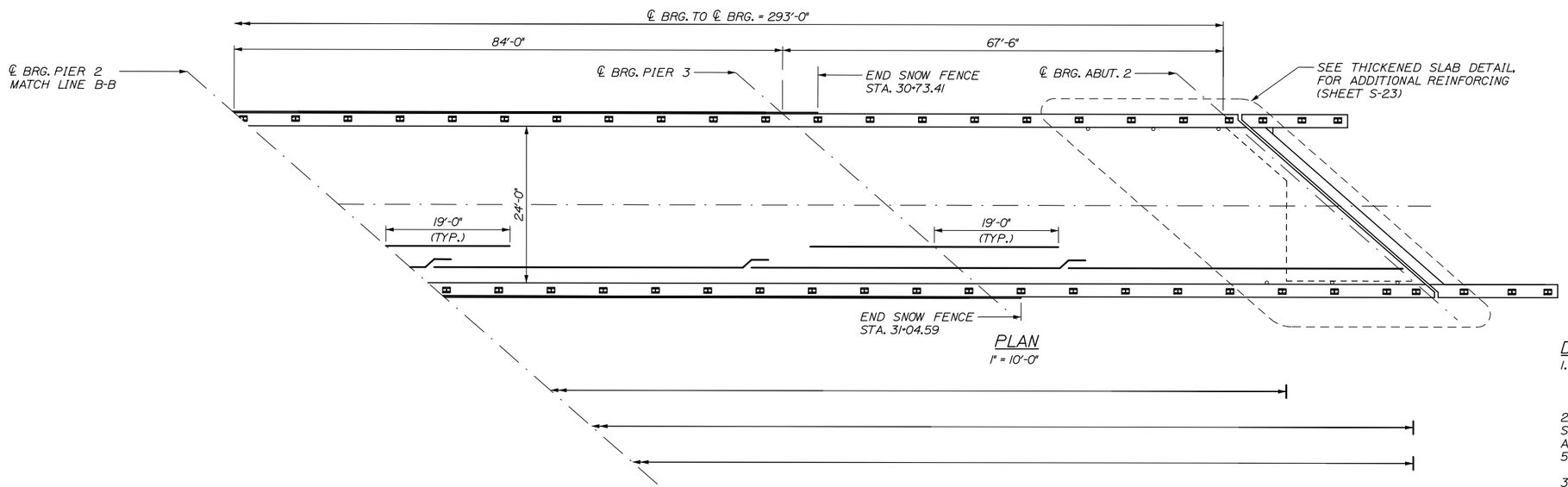

PLAN
1" = 10'-0"

DECK PLAN NOTES:

1. LAP LENGTH SHALL BE
   2'-7" MIN. FOR #5 BARS
   3'-1" MIN. FOR #6 BARS

2. THE THEORETICAL BLOCKING USED FOR DESIGN OF THE STRUCTURE IS 2½ INCHES AT THE CENTERLINE OF BEARING AT THE ABUTMENTS AND PIERS. REFER TO STANDARD DETAIL 502(02) FOR BLOCKING DETAILS.

3. THREE ADDITIONAL S551 BARS SHALL BE PLACED AT EACH RAILING POST LOCATION. SEE SHEET S-24 FOR DETAIL.

Date:12/23/2015

Filename: 054_Superstructure Plan.dgn

Scale:

No.	Revision	By	Date

Designed by:

HNTB

CONSULTANT PROJECT MANAGER: Dale A. Mitchell, P.E.

	By	Date		By	Date
Designed	GLS	11/15	Checked	KEB	11/15
Drawn	PEB	11/15	In Charge of	RAL	11/15

HNTB CORPORATION
340 County Road, Suite 6-C
Westbrook, ME 04092
TEL (207) 774-5155
FAX (207) 228-0909

MAINE TURNPIKE

THE GOLD STAR MEMORIAL HIGHWAY

MTA PROJECT MANAGER: Ralph C. Norwood IV, P.E., P.T.O.E.

BRIDGE SUPERSTRUCTURE REPLACEMENT
SMALL ROAD UNDERPASS

SUPERSTRUCTURE PLAN 1

SHEET NUMBER: S-22

CONTRACT:2016.03

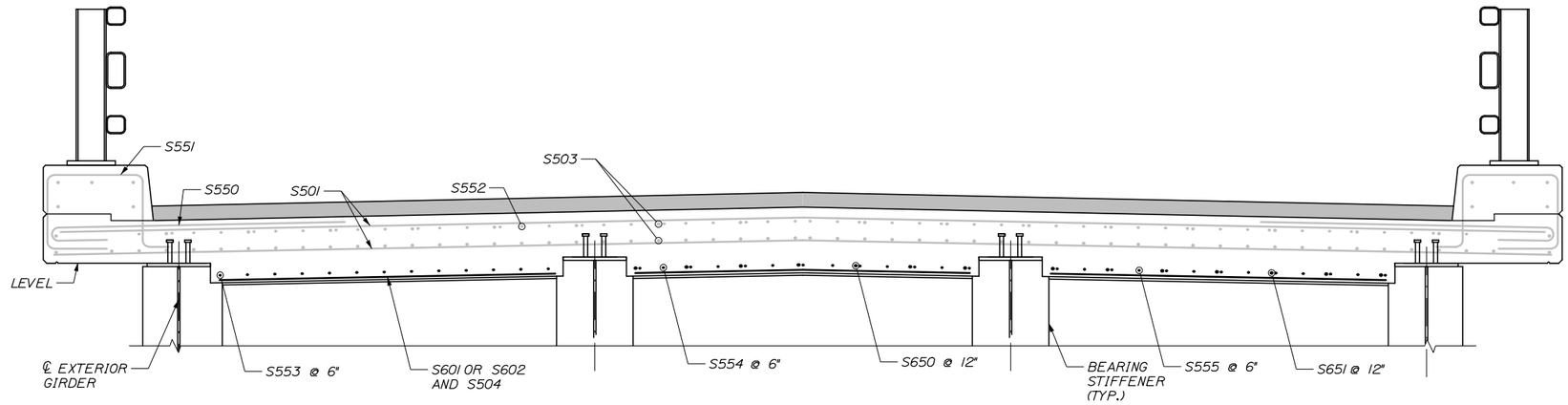

END OF SLAB DETAIL

(SHOWN PARALLEL TO FACE OF ABUT. 2, DOWNSTATION)

3/4" = 1'-0"

NOTE:
1. DECK AND CURB REINFORCEMENT SHOWN SCREENED FOR CLARITY.

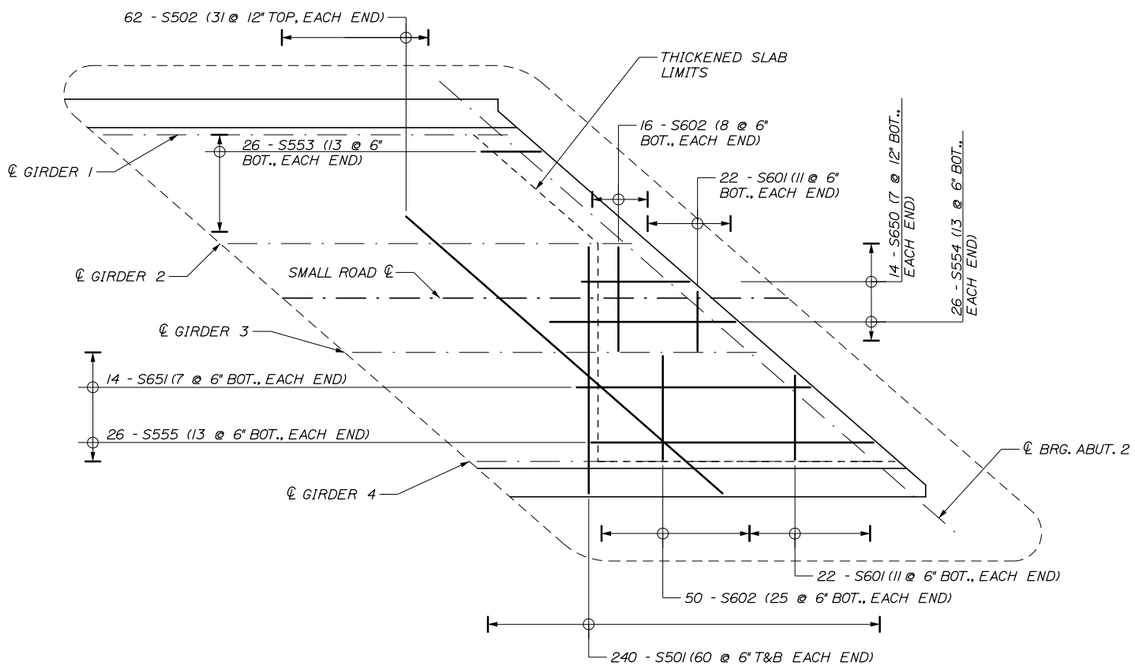

THICKENED SLAB DETAIL

(ABUTMENT 2 SHOWN, ABUTMENT 1 OPPOSITE HAND)

3/16" = 1'-0"

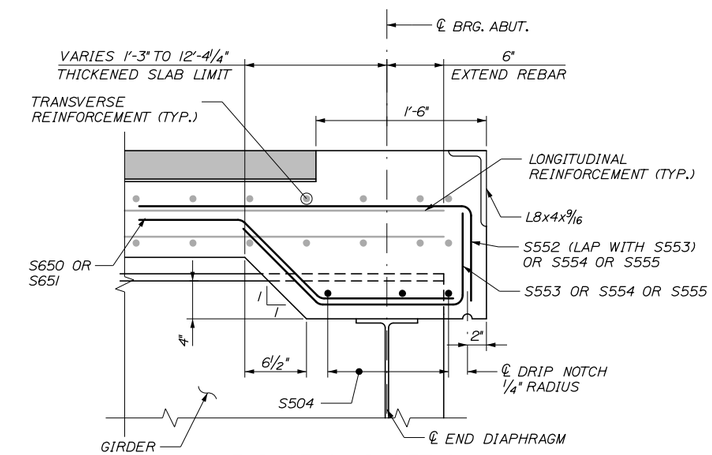

END OF SLAB DETAIL

(SHOWN PERPENDICULAR TO ABUT. BRG.)

1 1/2" = 1'-0"

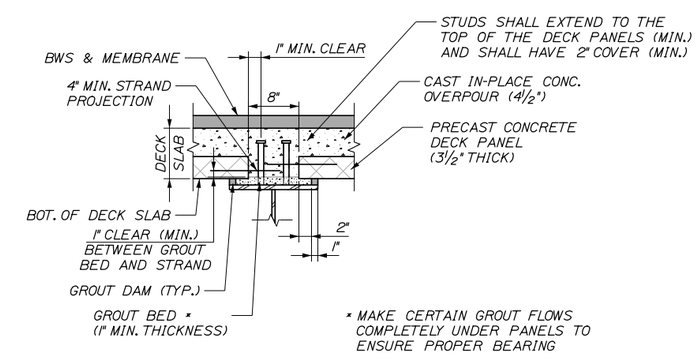

PRECAST PANEL HAUNCH DETAIL

(USE OF PRECAST PANELS IS OPTIONAL)

1" = 1'-0"

Date:12/23/2015

Filename: 055_Superstructure Details 1.dgn

Scale:

No.	Revision	By	Date

Designed by:

HNTB

CONSULTANT PROJECT MANAGER: Dale A. Mitchell, P.E.

	By	Date		By	Date
Designed	GLS	11/15	Checked	KEB	11/15
Drawn	PEB	11/15	In Charge of	RAL	11/15

HNTB CORPORATION
340 County Road, Suite 6-C
Westbrook, ME 04092
TEL (207) 774-5155
FAX (207) 228-0909

MAINE TURNPIKE

THE GOLD STAR MEMORIAL HIGHWAY

MTA PROJECT MANAGER: Ralph C. Norwood IV, P.E., P.T.O.E.

BRIDGE SUPERSTRUCTURE REPLACEMENT
SMALL ROAD UNDERPASS

SUPERSTRUCTURE DETAILS 1

SHEET NUMBER: S-23

CONTRACT:2016.03

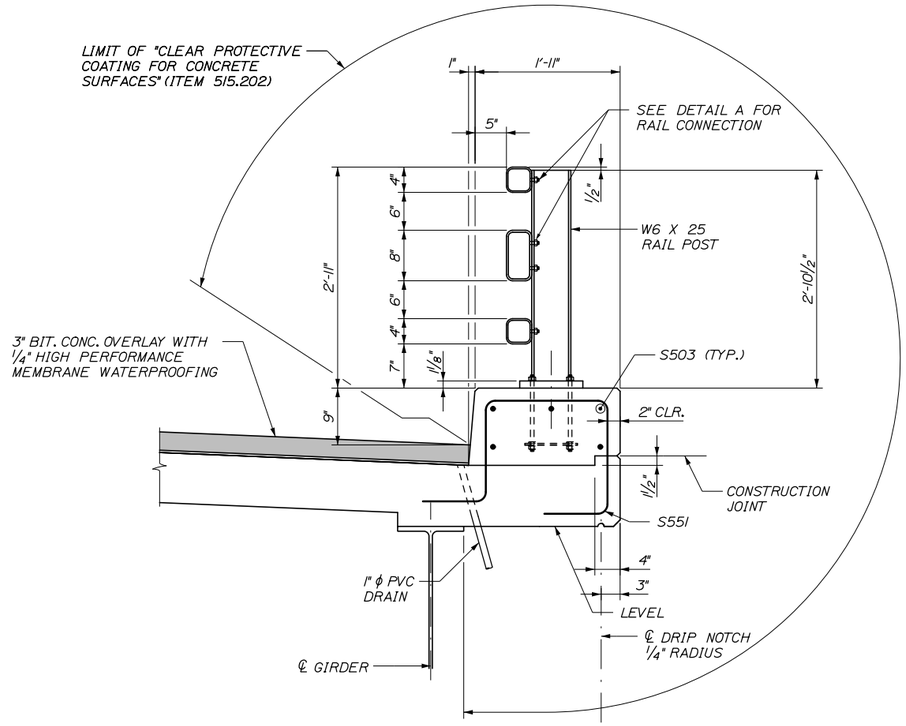

BARRIER DETAIL
1" = 1'-0"

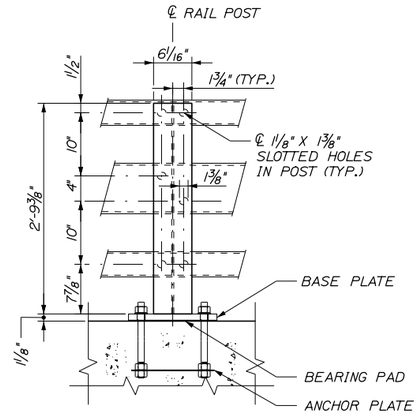

BACK ELEVATION VIEW
1" = 1'-0"

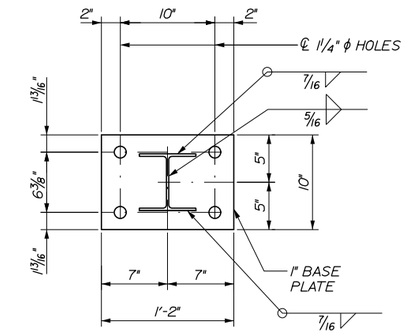

POST & BASE PLATE PLAN
1 1/2" = 1'-0"

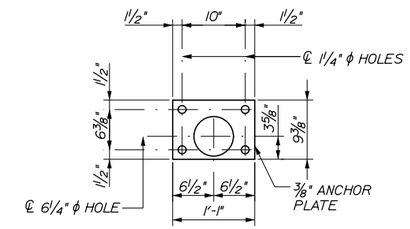

ANCHOR PLATE PLAN
1" = 1'-0"

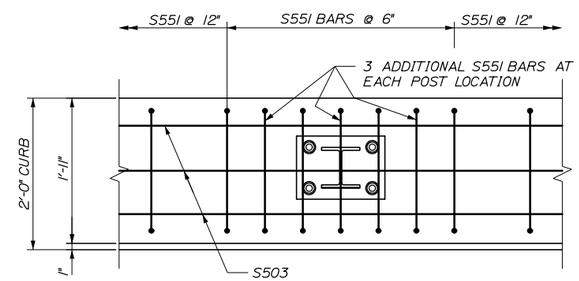

CURB REINFORCING PLAN
1" = 1'-0"

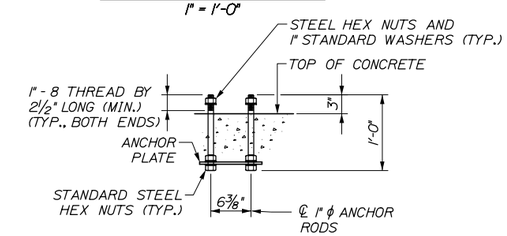

RAIL POST ANCHORAGE
1" = 1'-0"

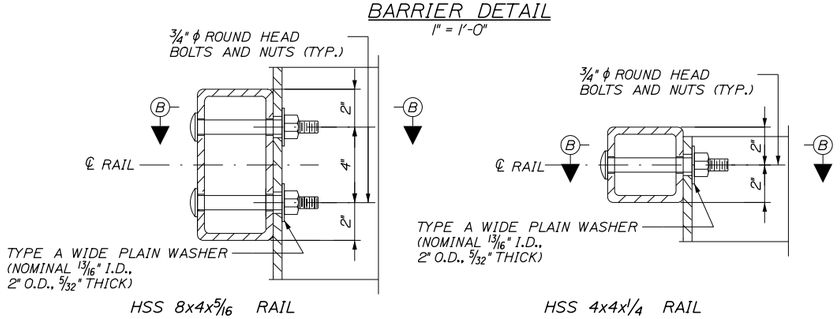

DETAIL A RAIL CONNECTION
3" = 1' -0"

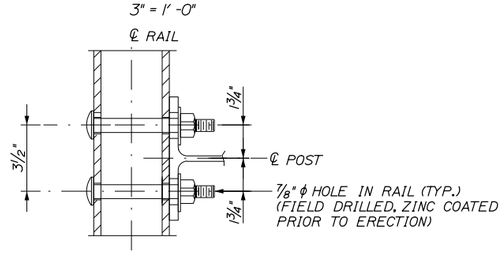

SECTION B-B
3" = 1' -0"

BRIDGE RAIL MATERIAL NOTES:

1. STRUCTURAL TUBING SHALL CONFORM TO THE REQUIREMENTS OF ASTM A500, GRADE B, STRUCTURAL TUBING. RAIL TUBING SHALL MEET THE LONGITUDINAL CHARPY V-NOTCH REQUIREMENTS OF 15 FT. LBS. AT 0 DEGREES F. FOR ASTM A500, GRADE B. THE TEST SAMPLES SHALL BE TAKEN AFTER FORMING THE TUBES.

2. RAIL POSTS AND BASE PLATES SHALL CONFORM TO THE REQUIREMENTS OF ASTM A572 GRADE 50, EXCEPT ANCHOR PLATES MAY BE ASTM A36.

3. BOLTS AND MATCHING NUTS FOR RAIL-TO-POST ATTACHMENT SHALL CONFORM TO ASTM A325 OR A449. ALL OTHER BOLTS AND NUTS SHALL CONFORM TO ASTM 307 AND ASTM 563 GRADE A RESPECTIVELY OR BETTER, EXCEPT ASTM A307 NUTS MAY BE USED ON THE BOTTOM OF ANCHOR ASSEMBLY. WASHERS SHALL BE HARDENED STEEL COMMERCIAL TYPE A PLAIN WIDE WASHERS AND SHALL MEET DIMENSIONAL REQUIREMENTS OF A.N.S.I. B18.22. ANCHOR RODS SHALL CONFORM TO ASTM F1554, Gr. 105.

4. ALL STEEL COMPONENTS (EXCEPT STAINLESS) SHALL BE GALVANIZED AFTER FABRICATION IN CONFORMANCE TO AASHTO M232 (ASTM A153) AND AASHTO M111 (ASTM A123). THE GALVANIZING KETTLE SHALL HAVE 0.05 TO 0.09 PERCENT NICKEL. GALVANIZING SURFACES SHALL HAVE A UNIFORM APPEARANCE AND GALVANIZING MATERIAL SHALL BE PROPERLY STORED.

5. PREFORMED BEARING PADS (1/8" THICK) SHALL CONFORM TO AASHTO M251.

Date:12/23/2015

Filename: 056_Superstructure Details 2.dgn

Scale:

No.	Revision	By	Date

Designed by:

HNTB

CONSULTANT PROJECT MANAGER: Dale A. Mitchell, P.E.

	By	Date		By	Date
Designed	GLS	11/15	Checked	KEB	11/15
Drawn	PEB	11/15	In Charge of	RAL	11/15

HNTB CORPORATION
340 County Road, Suite 6-C
Westbrook, ME 04092
TEL (207) 774-5155
FAX (207) 228-0909

MAINE TURNPIKE

THE GOLD STAR MEMORIAL HIGHWAY

MTA PROJECT MANAGER: Ralph C. Norwood IV, P.E., P.T.O.E.

BRIDGE SUPSTRUCTURE REPLACEMENT
SMALL ROAD UNDERPASS

SUPERSTRUCTURE DETAILS II

SHEET NUMBER: S-24

CONTRACT:2016.03

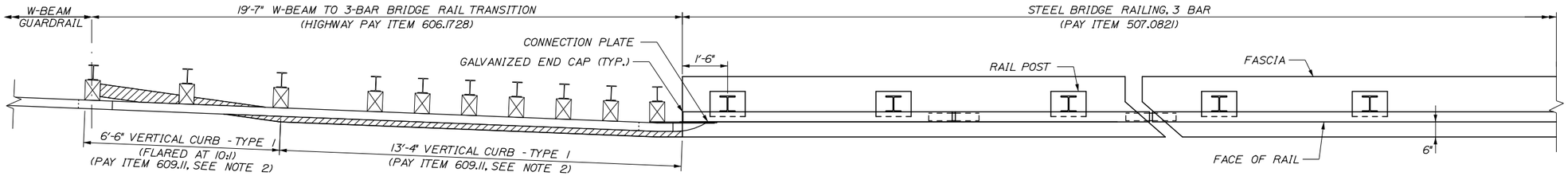

PLAN - W-BEAM TO 3-BAR BRIDGE RAIL TRANSITION

1/2" = 1'-0"

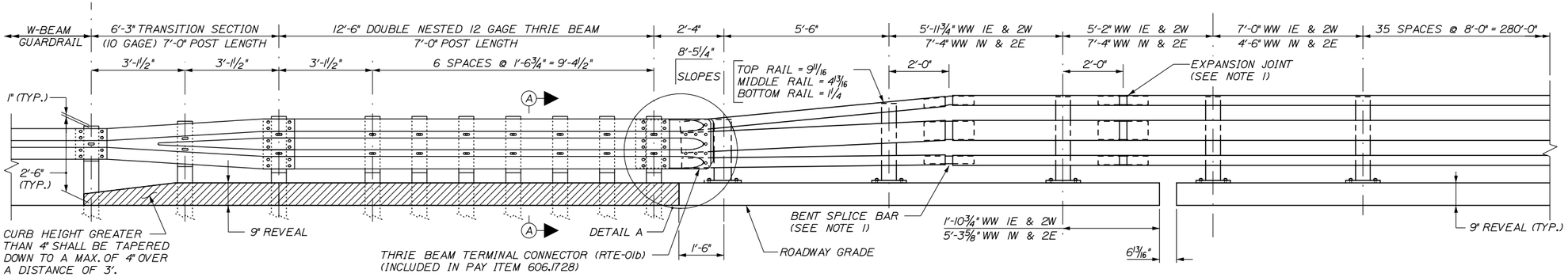

ELEVATION - W-BEAM TO 3-BAR BRIDGE RAIL TRANSITION

1/2" = 1'-0"

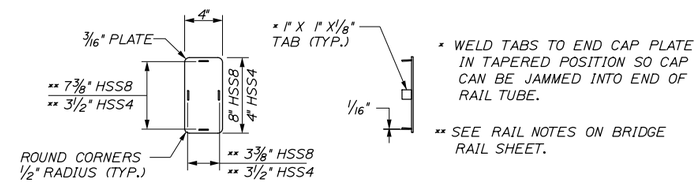

END CAP DETAILS

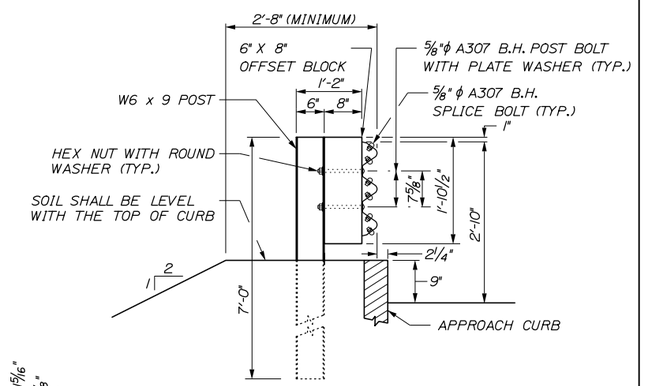

SECTION A-A (POST RAIL ASSEMBLY)

TYPICAL AT 7'-0" DRIVEN POST LOCATIONS

3/4" = 1'-0"

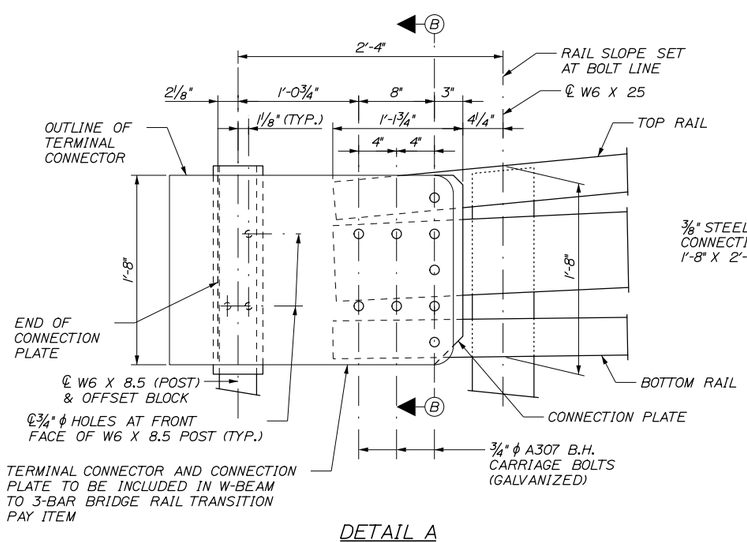

DETAIL A

(OVERLAPPING OF DOUBLE NESTED THRIE-BEAM NOT SHOWN FOR CLARITY)

1 1/2" = 1'-0"

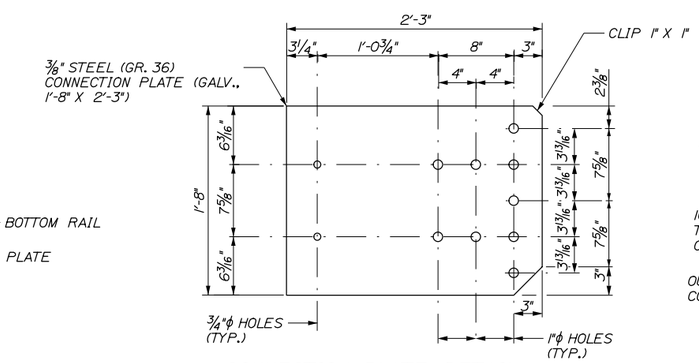

CONNECTION PLATE DETAIL

1 1/2" = 1'-0"

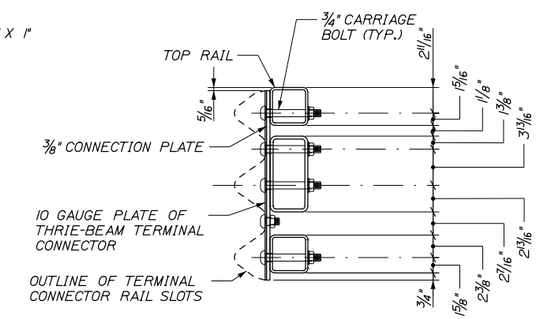

SECTION B-B (THROUGH CONNECTION PLATE)

1 1/2" = 1'-0"

NOTE:

1. SEE MAINEDOT STANDARD DETAIL 507(10) FOR RAIL BAR EXPANSION JOINT DETAIL.

2. CURBING SHALL BE EITHER PRECAST CONCRETE, CAST-IN-PLACE CONCRETE OR GRANITE TO MEET DIMENSIONS SHOWN ON THE PLANS. CURBING SHALL BE PAID UNDER ITEM 609.11 VERTICAL CURB-TYPE 1.

Date:12/23/2015

Filename: 057_BridgeRailTrans.dgn

Scale:

No.	Revision	By	Date

Designed by:

HNTB

CONSULTANT PROJECT MANAGER: Dale A. Mitchell, P.E.

	By	Date		By	Date
Designed	GLS	11/15	Checked	KEB	11/15
Drawn	PEB	11/15	In Charge of	RAL	11/15

HNTB CORPORATION
340 County Road, Suite 6-C
Westbrook, ME 04092
TEL (207) 774-5155
FAX (207) 228-0909

MAINE TURNPIKE

THE GOLD STAR MEMORIAL HIGHWAY

MTA PROJECT MANAGER: Ralph C. Norwood IV, P.E., P.T.O.E.

BRIDGE SUPERSTRUCTURE REPLACEMENT
SMALL ROAD UNDERPASS

BRIDGE RAIL TRANSITION DETAILS

SHEET NUMBER: S-25

CONTRACT:2016.03

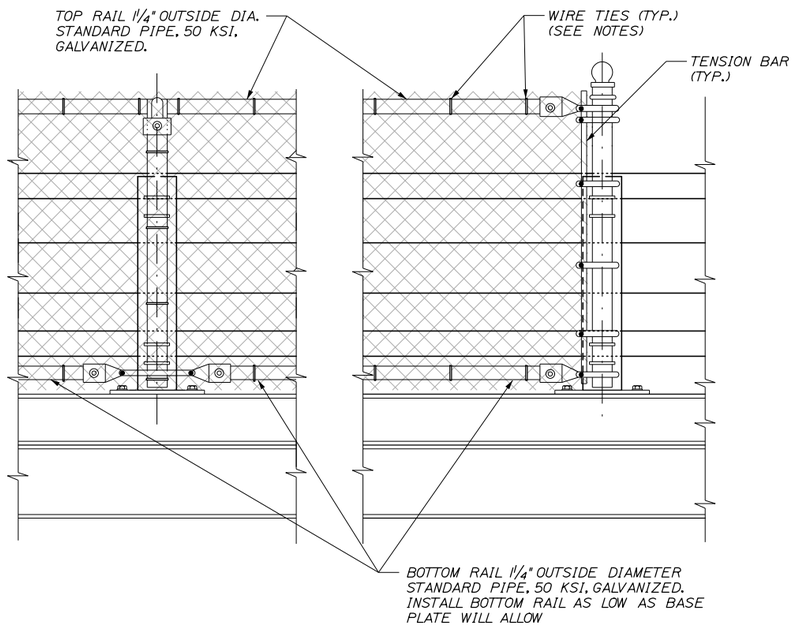

ELEVATION INTERIOR POST

ELEVATION END POST

SNOW FENCE POST ATTACHMENT TO TWO-RAIL RAILING

1" = 1'-0"

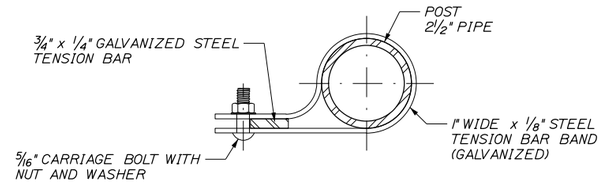

TENSION BAND DETAIL

6" = 1'-0"

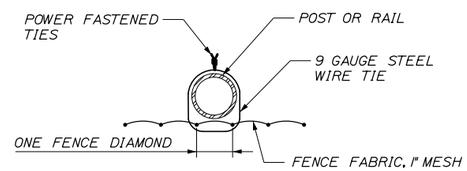

POWER FASTENED TIE

NOT TO SCALE

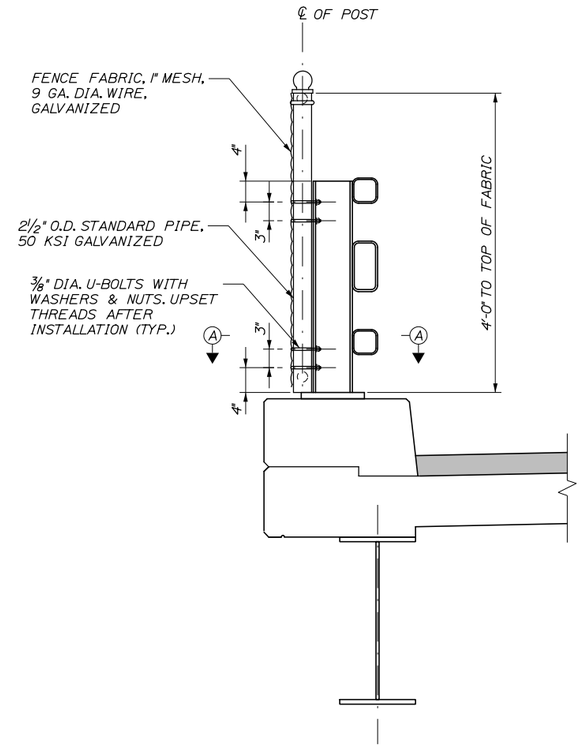

BARRIER DETAIL

1" = 1'-0"

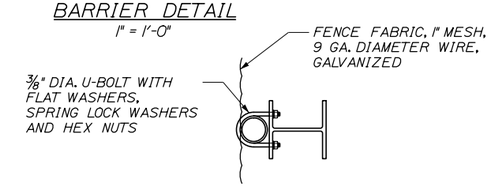

SECTION A-A

1½" = 1'-0"

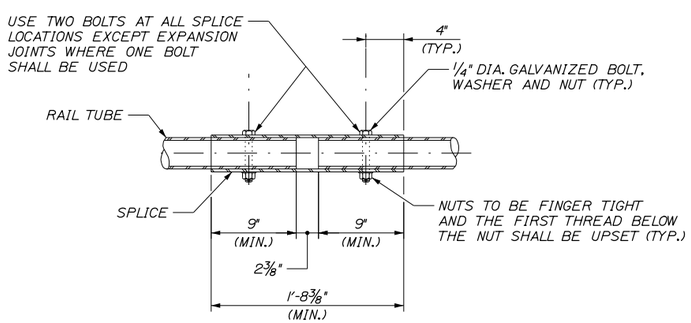

TYPICAL RAIL SPLICE DETAIL (TOP & BOTTOM RAIL)

1½" = 1'-0"

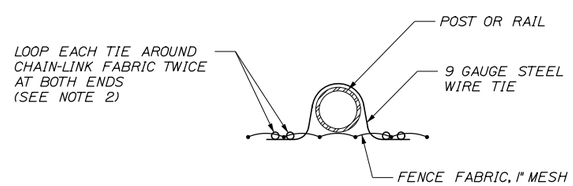

DOUBLE PIGTAILED TIE - ALTERNATE

NOT TO SCALE

NOTES:

1. ROUND WIRE TIES SHALL BE 9 GAUGE ZINC-COATED STEEL PREFORMED TO THE RADIUS OF THE POST AND POWER-FASTENED TO WRAP 360 DEGREES AROUND THE POST AND ONE COMPLETE DIAMOND OF THE CHAIN-LINK FENCE. THE TWO ENDS SHALL BE TWISTED TOGETHER IN A CLOSE HELIX OF 1½ MACHINE TURNS (3 FULL TWISTS) TIGHTLY AROUND THE POST AND CHAIN-LINK FABRIC. SPACE TIES @ 6" O.C. TO BOTTOM RAIL AND @ 12" O.C. TO ALL POSTS AND OTHER RAILS. TWISTED ENDS SHALL BE BENT DOWN UPON COMPLETION.

2. ALTERNATIVELY, WIRE TIES MAY BE STANDARD ROUND 9 GAUGE ZINC-COATED STEEL. ALL TIES SHALL BE WRAPPED AROUND CHAIN-LINK FABRIC TWICE (DOUBLE PIGTAILED) AT BOTH ENDS. SPACE TIES @ 6" O.C. TO BOTTOM RAIL AND @ 12" O.C. TO ALL POSTS AND OTHER RAILS.

3. ALL BOLTS AND NUTS SHALL BE STEEL CONFORMING TO ASTM A 307 AND ASTM A 563 GRADE A RESPECTIVELY. WASHERS SHALL BE HARDENED STEEL COMMERCIAL TYPE A PLAIN AND SHALL MEET THE DIMENSIONAL REQUIREMENTS OF ANSI B18.22. ALL BOLTS, NUTS AND WASHERS SHALL BE HOT-DIP GALVANIZED IN ACCORDANCE WITH AASHTO M 111 (ASTM A 123) OR AASHTO M 232 (ASTM A 153) AS APPLICABLE.

4. SEE SHEET S-22 FOR SNOW FENCE LIMITS.

5. POST CAPS SHALL BE SECURELY ATTACHED TO POSTS.

Date:12/23/2015

Filename: 058_Snow Fence Details.dgn

Scale:

No.	Revision	By	Date

Designed by: HNTB

CONSULTANT PROJECT MANAGER: Dale A. Mitchell, P.E.

	By	Date		By	Date
Designed	GLS	11/15	Checked	KEB	11/15
Drawn	PEB	11/15	In Charge of	RAL	11/15

HNTB CORPORATION
340 County Road, Suite 6-C
Westbrook, ME 04092
TEL (207) 774-5155
FAX (207) 228-0909

MAINE TURNPIKE

THE GOLD STAR MEMORIAL HIGHWAY

MTA PROJECT MANAGER: Ralph C. Norwood IV, P.E., P.T.O.E.

BRIDGE SUPERSTRUCTURE REPLACEMENT
SMALL ROAD UNDERPASS

SNOW FENCE DETAILS

SHEET NUMBER: S-26

CONTRACT:2016.03

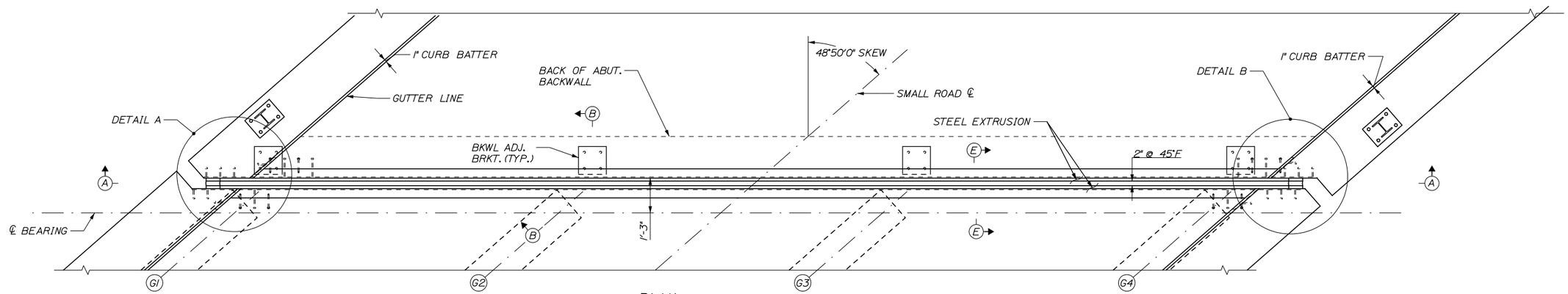

PLAN
(ABUTMENT 2 SHOWN, ABUTMENT 1 SIMILAR)
1/2" = 1'-0"

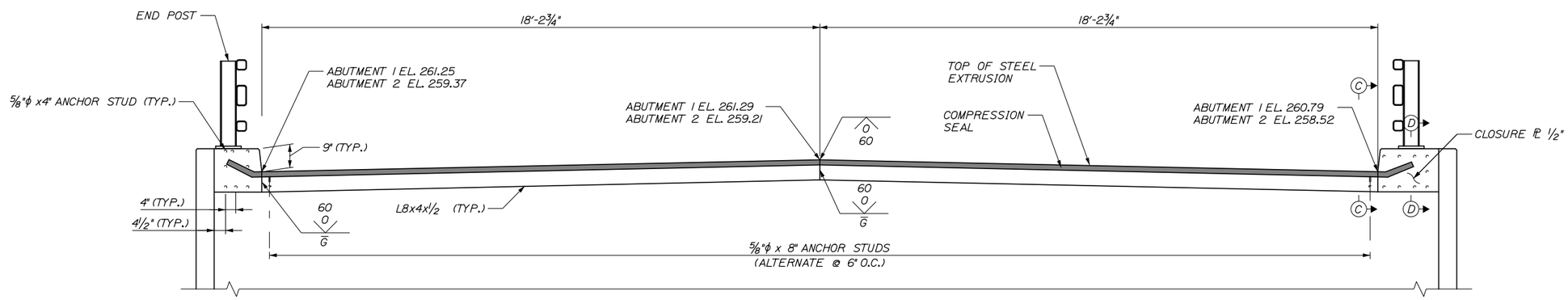

SECTION A-A
(ABUTMENT 2 SHOWN, ABUTMENT 1 SIMILAR)
1/2" = 1'-0"

EXPANSION JOINT NOTES:

1. SHOP DRAWINGS OF THE EXPANSION DEVICE SHALL BE SUBMITTED FOR APPROVAL BY THE RESIDENT

2. THE EXPANSION DEVICE SHALL BE SET TO AN OPENING OF 2 INCHES IN THE FABRICATION SHOP AND SHALL BE SECURED TO THE GIRDER AND/OR ANCHOR BOLTS WHEN THE AMBIENT TEMPERATURE IS BETWEEN 40° AND 80°F. THE OPENING SHALL BE ADJUSTED TO REFLECT THE TEMPERATURE OF THE STRUCTURE AT THE TIME OF INSTALLATION. SEE TABLE FOR THE OPENING DIMENSIONS. JOINT OPENING SHALL BE MEASURED NORMAL TO THE CENTERLINE OF BEARING.

3. THE CONTRACTOR SHALL APPLY AN EPOXY BONDING AGENT SELECTED FROM MAINEDOT'S QUALIFIED PRODUCTS LIST TO ALL STEEL SURFACES OF THE EXPANSION JOINT THAT WILL BE EMBEDDED IN THE CONCRETE BEFORE PLACING THE DECK AND BACKWALL CONCRETE.

4. ALL STEEL COMPONENTS SHALL BE AASHTO M270 GRADE 36, UNLESS OTHERWISE NOTED. THE EXPANSION JOINT ASSEMBLY AND ASSOCIATED HARDWARE SHALL BE HOT DIPPED GALVANIZED AFTER FABRICATION.

5. ALL WELDS ARE 5/16" CONTINUOUS FILLETS, EXCEPT AS NOTED.

6. FOR CLARITY, NOT ALL REINFORCING STEEL HAS BEEN SHOWN IN ALL DETAILS.

7. THE NEOPRENE LOCKING COMPRESSION SEALS TO BE FURNISHED SHALL HAVE A MINIMUM MOVEMENT RANGE OF 3 INCHES. SEALS AND EDGE BEAM SHALL BE "WABO D SERIES" AS MANUFACTURED BY WATSON BOWMAN ACME.

8. FOR SECTIONS B-B, C-C, D-D, E-E AND DETAILS A AND B SEE SHEET S-28.

9. COMPRESSION SEALS SHALL BE INSTALLED IN THE SHOP AS ONE CONTINUOUS PIECE.

Scale:

No.	Revision	By	Date

Designed by:

HNTB

CONSULTANT PROJECT MANAGER: Dale A. Mitchell, P.E.

	By	Date		By	Date
Designed	GLS	11/15	Checked	KEB	11/15
Drawn	PEB	11/15	In Charge of	RAL	11/15

HNTB CORPORATION
340 County Road, Suite 6-C
Westbrook, ME 04092
TEL (207) 774-5155
FAX (207) 228-0909

MAINE TURNPIKE

THE GOLD STAR MEMORIAL HIGHWAY

MTA PROJECT MANAGER: Ralph C. Norwood IV, P.E., P.T.O.E.

BRIDGE SUPERSTRUCTURE REPLACEMENT
SMALL ROAD UNDERPASS

EXPANSION JOINT DETAILS 1

SHEET NUMBER: S-27

CONTRACT:2016.03

Date:12/23/2015
Filename: 059_Expansion Joint Details 1.dgn

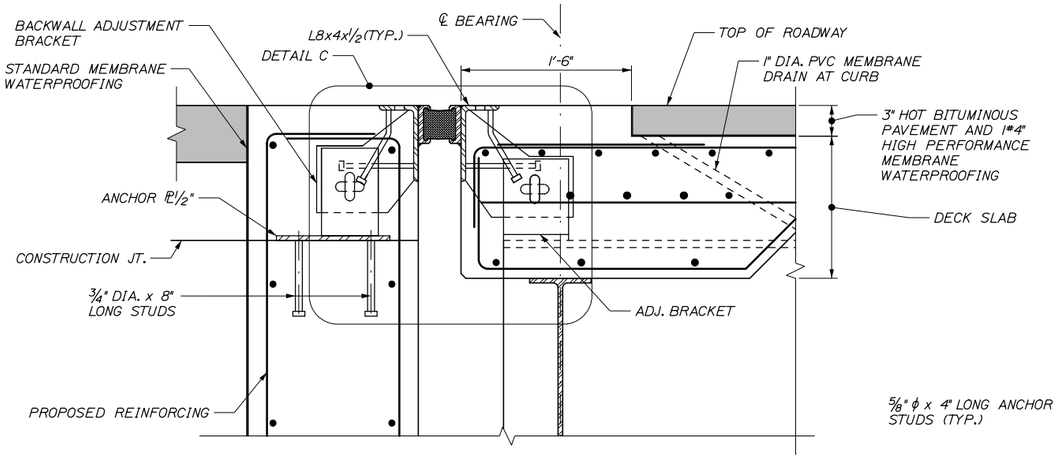

SECTION B-B
1 1/2" = 1'-0"

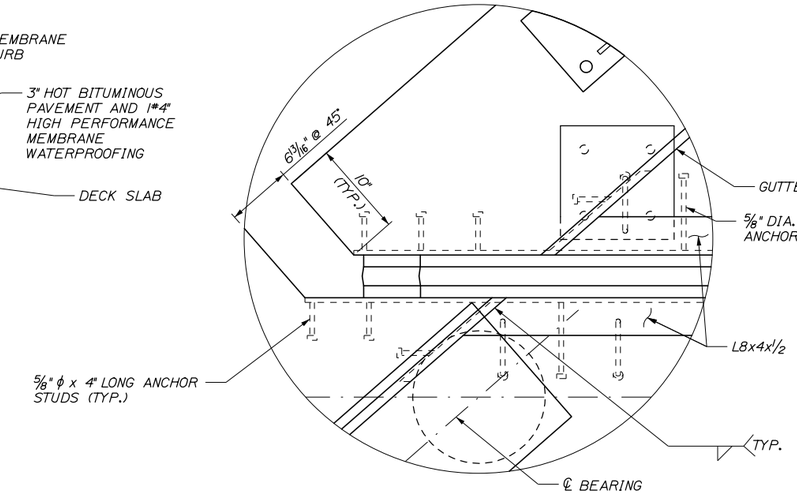

DETAIL A
1 1/2" = 1'-0"

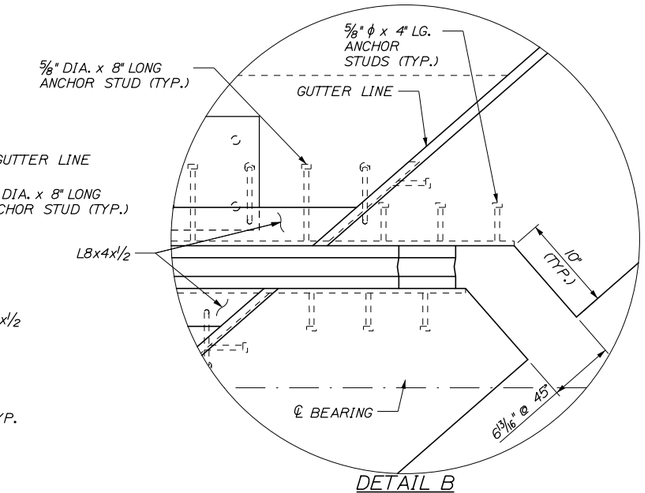

DETAIL B
1 1/2" = 1'-0"

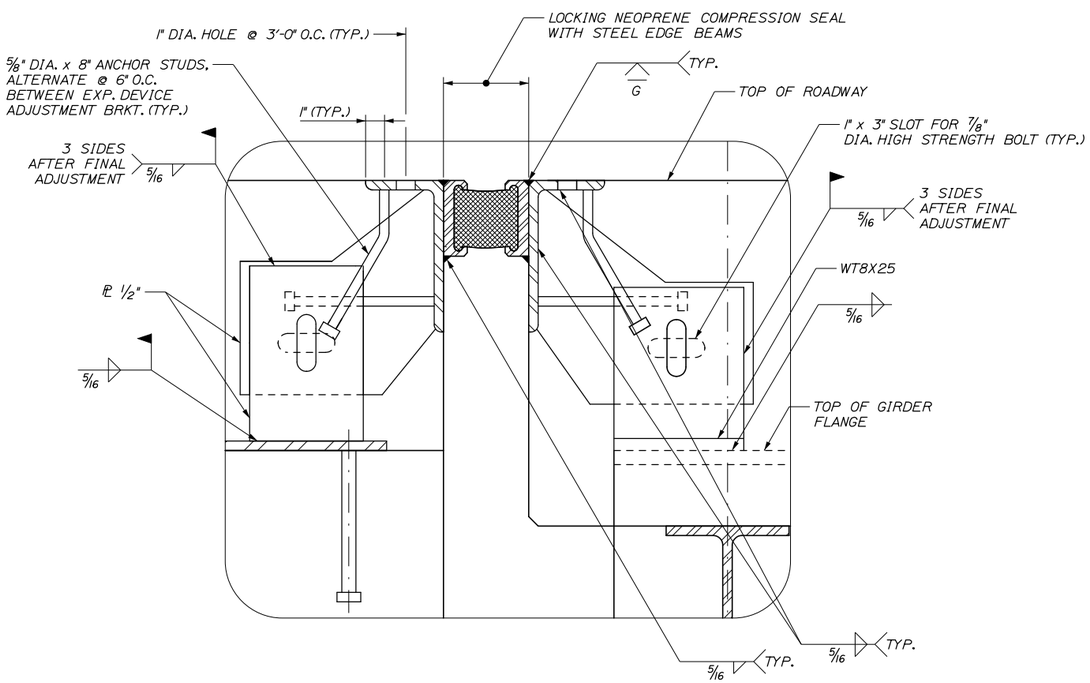

DETAIL C
3" = 1'-0"

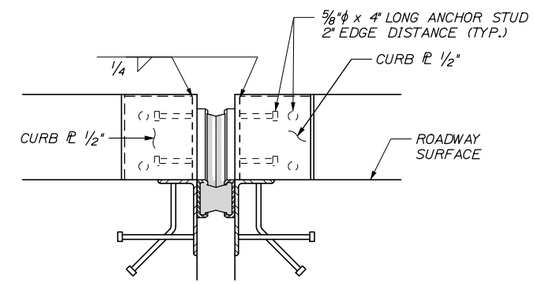

SECTION C-C
1 1/2" = 1'-0"

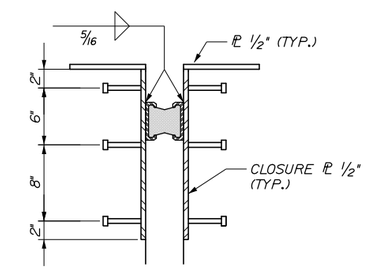

SECTION D-D
1 1/2" = 1'-0"

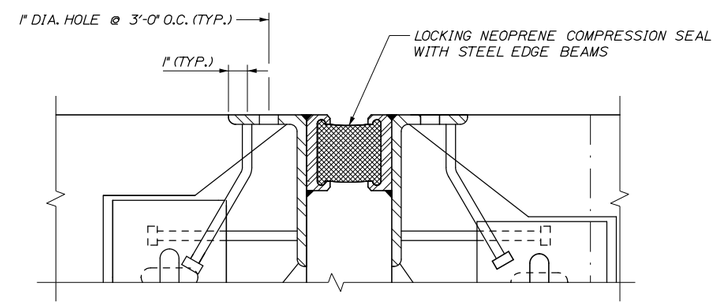

SECTION E-E
3" = 1'-0"

Date:12/23/2015

Filename: 060_Expansion Joint Details 2.dgn

Scale:			
No.	Revision	By	Date

Designed by: HNTB

CONSULTANT PROJECT MANAGER: Dale A. Mitchell, P.E.

	By	Date		By	Date
Designed	GLS	11/15	Checked	KEB	11/15
Drawn	PEB	11/15	In Charge of	RAL	11/15

HNTB CORPORATION
340 County Road, Suite 6-C
Westbrook, ME 04092
TEL (207) 774-5155
FAX (207) 228-0909

MAINE TURNPIKE

THE GOLD STAR MEMORIAL HIGHWAY

MTA PROJECT MANAGER: Ralph C. Norwood IV, P.E., P.T.O.E.

BRIDGE SUPERSTRUCTURE REPLACEMENT
SMALL ROAD UNDERPASS

EXPANSION JOINT DETAILS II

SHEET NUMBER: S-28

CONTRACT:2016.03

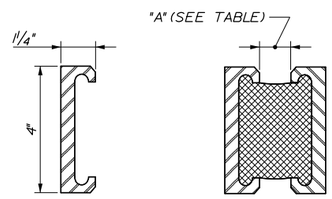

DETAIL - NEOPRENE COMPRESSION SEAL
WITH STEEL EDGE BEAMS
N.T.S.

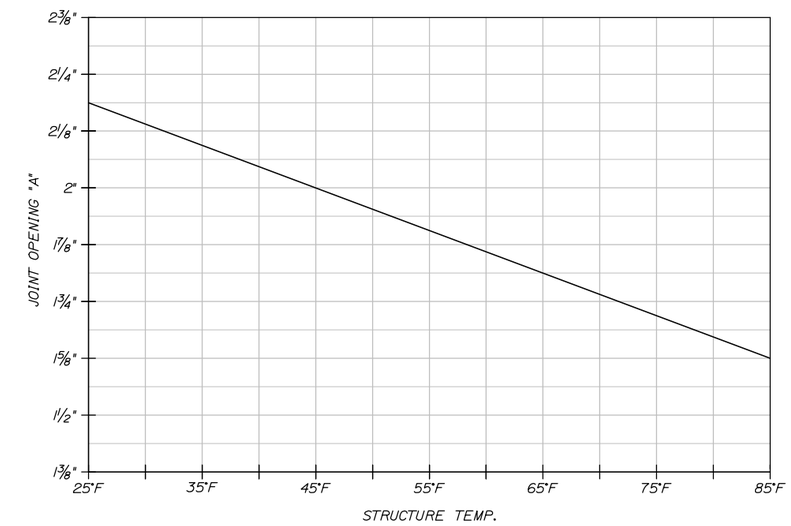

SEAL OPENING TABLE

Date:12/23/2015

Filename: 061_Expansion Joint Details 3.dgn

Scale:

No.	Revision	By	Date

Designed by:

HNTB

CONSULTANT PROJECT MANAGER: Dale A. Mitchell, P.E.

	By	Date		By	Date
Designed	GLS	11/15	Checked	KEB	11/15
Drawn	PEB	11/15	In Charge of	RAL	11/15

HNTB CORPORATION
340 County Road, Suite 6-C
Westbrook, ME 04092
TEL (207) 774-5155
FAX (207) 228-0909

MAINE TURNPIKE

THE GOLD STAR MEMORIAL HIGHWAY

MTA PROJECT MANAGER: Ralph C. Norwood IV, P.E., P.T.O.E.

BRIDGE SUPERSTRUCTURE REPLACEMENT
SMALL ROAD UNDERPASS

EXPANSION JOINT DETAILS III

SHEET NUMBER: S-29

CONTRACT:2016.03

61OF 65

SMALL ROAD BRIDGE

MARK	SIZE	NO.	LENGTH	TYPE	A	B	C	D	E	F	G	INCR.	REMARKS
ABUTMENTS													
A400	4	8	16'-0"	106	5'-3"	7'-10"	1'-11"	2'-11					Horizontal - Keeper Block
A500	5	298	6'-8"	118	5'-6"	1'-2"							Vertical - Backwall
A501	5	34	36'-2"	STR									Horizontal - Backwall to Wingwall
A502	5	72	6'-11"	118	5'-11"	1'-0"							Horizontal - Backwall to Wingwall
A503	5	18	6'-8"	109	4'-8"	1'-0"	8"	1'-0"	9"				Horizontal - Squared Off Add. Reinf.
A504	5	160	6'-1"	118	3'-4"	2'-9"							Vertical - Abutment Seat
A505	5	80	6'-5"	118	3'-0"	3'-5"							Vertical - Abutment Seat
A506	5	12	37'-6"	STR									Longitudinal - Abutment Seat
A507	5	36	5'-7"	118	2'-6"	3'-1"							Vertical - Keeper Block
WINGWALLS													
W500	5	80	12'-7"	118	11'-0"	1'-7"							Longitudinal
W501	5	36	4'-1"	129	1'-7"	1'-3"							Rail Post
W600	6	16	7'-7"	118	6'-0"	1'-7"							Vertical - Ends
W601	6	104	6'-3"	118	4'-8"	1'-7"							Vertical - Interior Short
W602	6	32	10'-2"	118	8'-7"	1'-7"							Vertical - Interior Long & Overhang
W603	6	40	7'-0"	118	5'-5"	1'-7"							Longitudinal
DECK SLAB													
S500	5	1054	27'-6"	STR									Top & Bot. Transverse
S501	5	240	1'-7.25" - 27'-5"	STR								5.25"	Top & Bot. Transverse, Short Ends
S502	5	62	28'-4"	STR									Skewed Transverse Bars (End Slab)
S503	5	516	51'-3"	STR									Top & Bot. Longitudinal
S504	5	18	9'-3.5"	STR									Thickened End Slab
S550	5	1182	5'-11"	108	5'-4"	0'-7"	0'-5"						Deck Overhang
S551	5	820	5'-11"	101	1'-7"	1'-4"	0'-10"	0'-10"					Curb Stirrup
S552	5	78	5'-2"	118	4'-4"	0'-10"							Thickened End Slab
S553	5	26	2'-10.25"	109	1'-9"	0'-10"	0'-6.5"	0'-9.25"	0'-6.5"				Thickened End Slab
S554	5	26	3'-9.75" - 10'-8.25"	109	2'-2.5" - 9'-1"	0'-10"	0'-6.5"	0'-9.25"	0'-6.5"			6.875"	Thickened End Slab
S555	5	26	12'-6.75" - 19'-4.25"	109	10'-11.5" - 17'-10"	0'-10"	0'-6.5"	0'-9.25"	0'-6.5"			6.875"	Thickened End Slab
S600	6	108	38'-0"	STR									Add'tl Pier
S601	6	44	1'-3" - 5'-7.5"	STR								5.25"	Thickened End Slab
S602	6	66	6'-0"	STR									Thickened End Slab
S601	6	14	5'-2.75" - 12'-1.25"	103	2'-3"	0'-9.25"	0'-6.5"	2'-2.5" - 9'-1"				13.75"	Thickened End Slab
S602	6	14	13'-11.75" - 20'-10.25"	103	2'-3"	0'-9.25"	0'-6.5"	10'-11.5" - 17'-10"				13.75"	Thickened End Slab

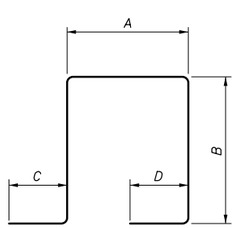

TYPE 101

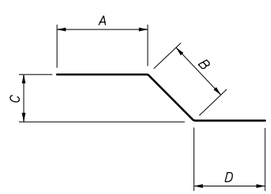

TYPE 103

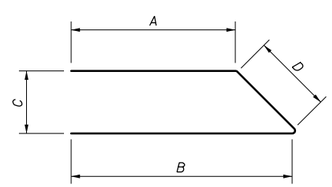

TYPE 106

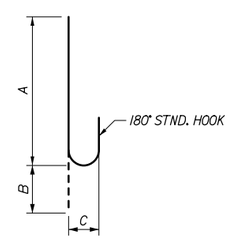

TYPE 108

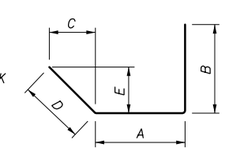

TYPE 109

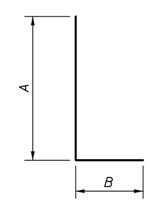

TYPE 118

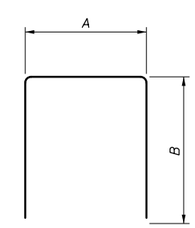

TYPE 129

Date:12/23/2015

Filename: 062_Reinforcing Steel Schedule.dgn

Scale:			
No.	Revision	By	Date

Designed by: HNTB

CONSULTANT PROJECT MANAGER: Dale Mitchell, P.E.

	By	Date		By	Date
Designed	GLS	11/15	Checked	KEB	11/15
Drawn	PEB	11/15	In Charge of	RAL	11/15

HNTB CORPORATION
340 County Road, Suite 6-C
Westbrook, ME 04092
TEL (207) 774-5155
FAX (207) 228-0909

MAINE TURNPIKE

THE GOLD STAR MEMORIAL HIGHWAY

MTA PROJECT MANAGER: Ralph C. Norwood IV, P.E., P.T.O.E.

BRIDGE SUPERSTRUCTURE REPLACEMENT
SMALL ROAD UNDERPASS

REINFORCING STEEL SCHEDULE

SHEET NUMBER: S-30

CONTRACT:2016.03

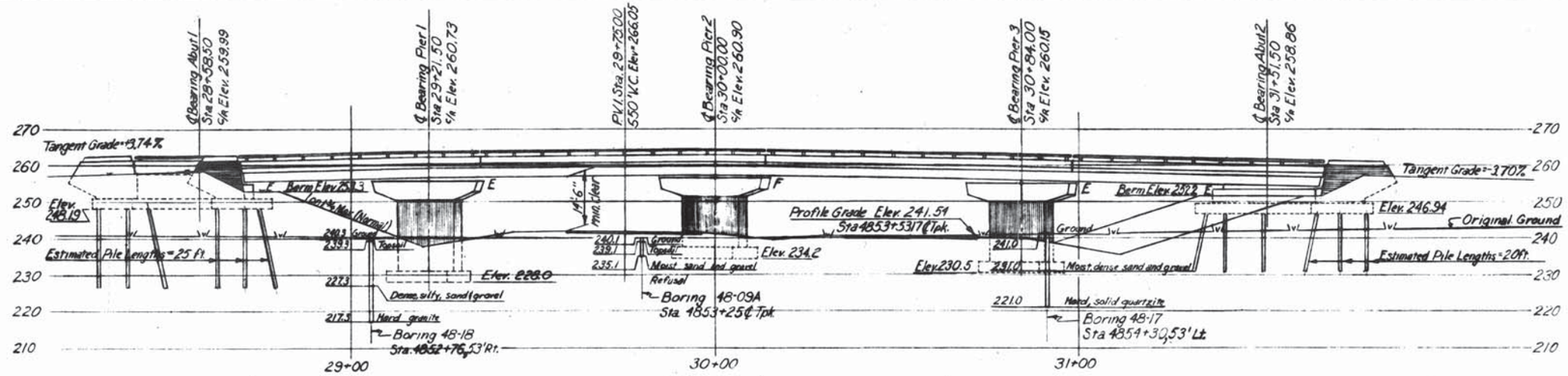

ELEVATION

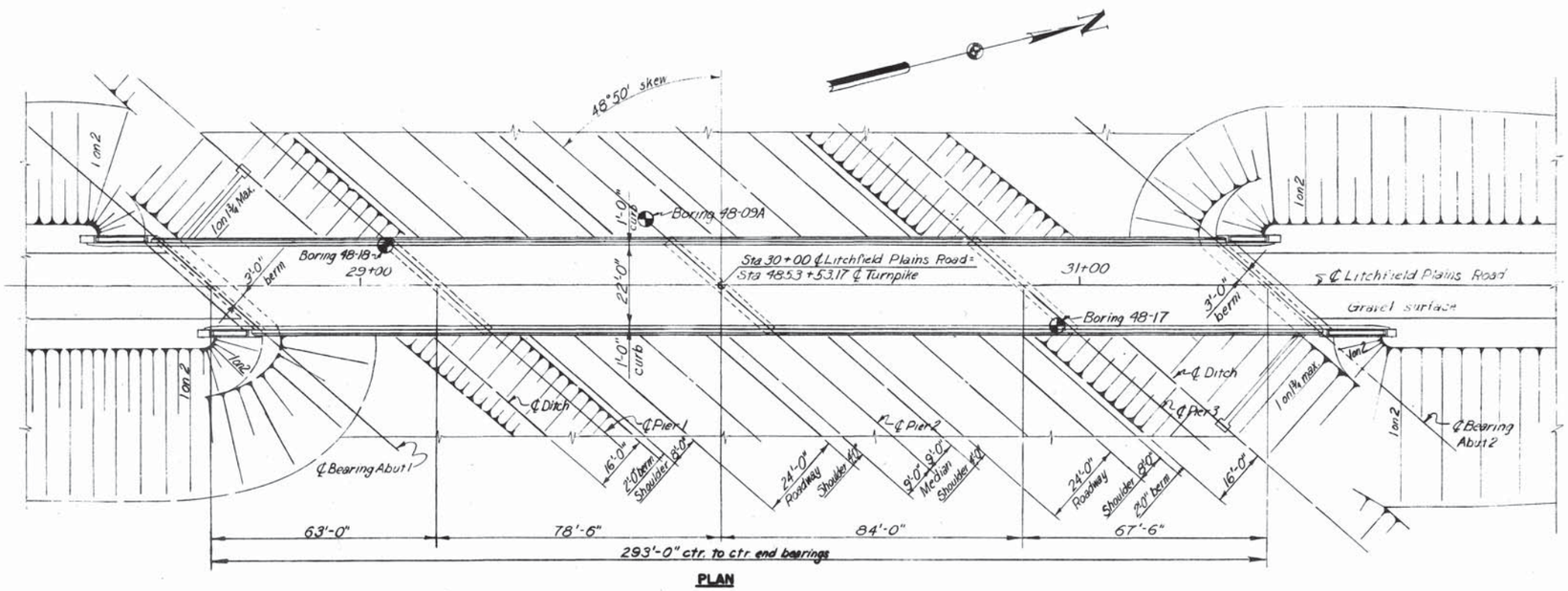

PLAN

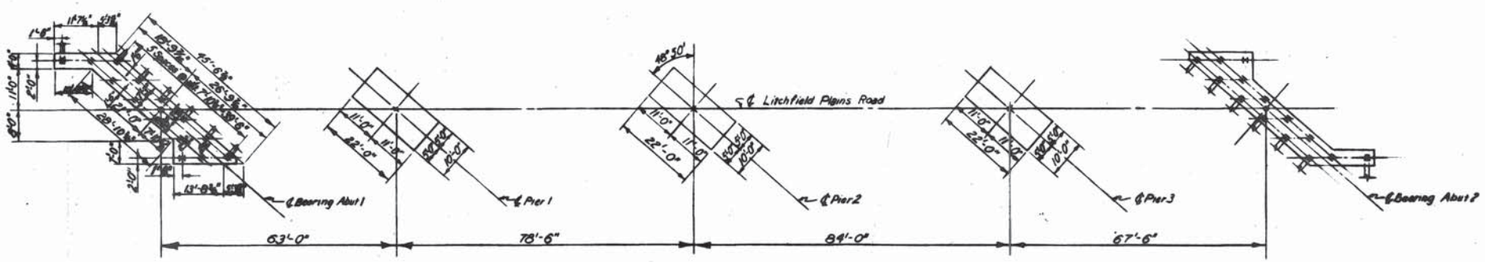

FOOTING PLAN

Note:
Footing for Abutment 2 is identical with that of Abutment 1 by rotation.
Piles shall be 10BP42.
Battered piles shall be battered 3" per foot as shown.

GENERAL NOTES

Design Specifications: AASHO (1953) with minor modifications.
Design Live Load: H-15
Maximum Soil Pressures:
Pier 1 = 3.7 tons/sq.ft.
Pier 2 = 3.7 tons/sq.ft.
Pier 3 = 4.1 tons/sq.ft.
Maximum Pile Load:
Abutments = 27 tons/pile

REFERENCES

Dwg. No.	Title	Substructure Contractor	Superstructure: Steel Fabricator	Superstructure: Steel Erector	Superstructure: Floor Contractor
SD-1A	Standard Abutment Details	✓	✓	✓	✓
SD-2	Standard Pier Details	✓	✓	✓	
SD-3	Abutment Drainage Details	✓			
SD-4	Standard Pile Details.	✓			
SD-5	Standard Handrail, Bearing Devices, and Miscellaneous Details	✓	✓	✓	✓
SD-6	Standard Diaphragm Details		✓	✓	✓
SD-9	Standard Type A Splices for 33WF Beams		✓	✓	
SD-12A	Type Z Expansion Joint	✓	✓	✓	✓
SD-14	Standard Bridge Floor Cross-Sections 20' and 22' Roadways	✓	✓	✓	✓

Litchfield Plains Road
Underpass

VICINITY MAP
Scale: 1" = 1 mi.

DRAWING NO. 73.01.03

	BY	DATE	No.	REVISION	BY	DATE
MADE	HCH	3-26-54				
TRACED			2	As-Built	HBH	1-25-56
CHECKED	RFS	3-29-54	1	Pers 1 & 2 Ftg. Elev.	CYA	7/13/55
IN CHARGE OF	DSK					

MAINE TURNPIKE AUTH
MAINE TURNPIKE
SECTION 2 — PORTLAND TO AUGUSTA
STRUCTURE NO. 73 — TURNPIKE UNDER
LITCHFIELD PLAINS ROAD
STA 4853 + 53.17
GENERAL PLAN AND ELEVATION
HOWARD, NEEDLES, TAMMEN & BERGENDOFF
CONSULTING ENGINEERS
NEW YORK — KANSAS CITY
SCALE: 1" = 20'-0"
CONTRACT NO.
SHEET NO. 324 OF 382

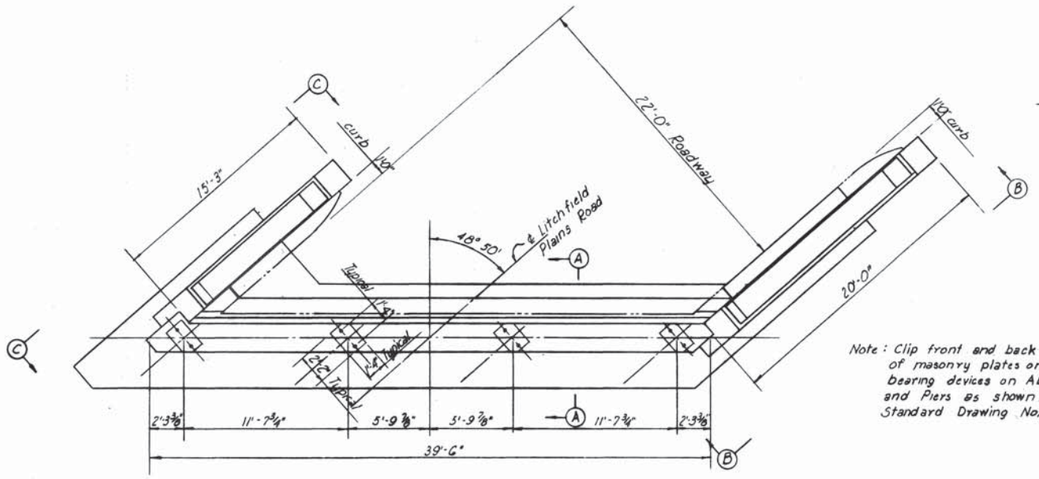

PLAN

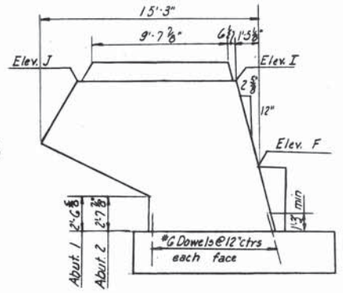

Note: Clip front and back corners of masonry plates on expansion bearing devices on Abutments and Piers as shown on Standard Drawing No. 5

END ELEVATION C-C

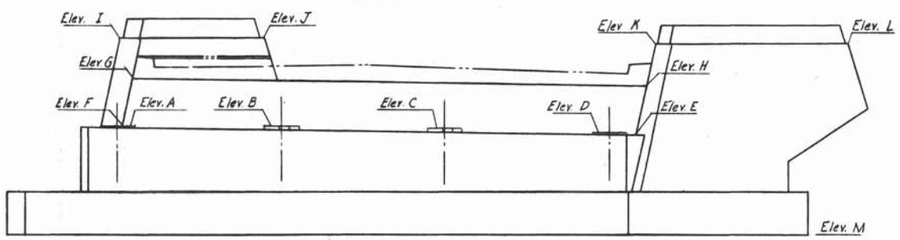

ELEVATION

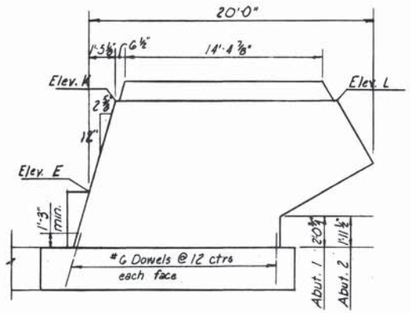

END ELEVATION B-B

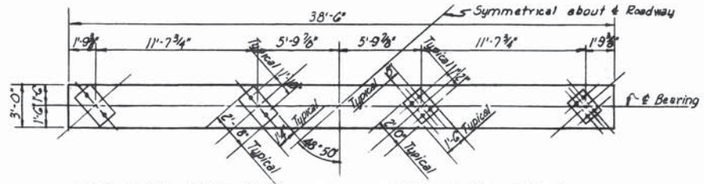

HALF PLAN PIERS 1 & 3 HALF PLAN PIER 2

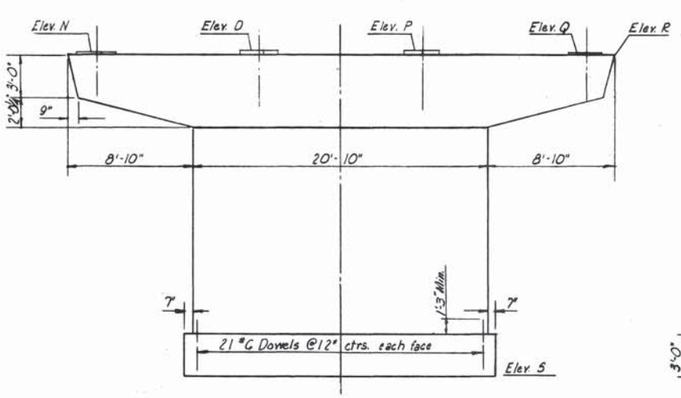

ELEVATION

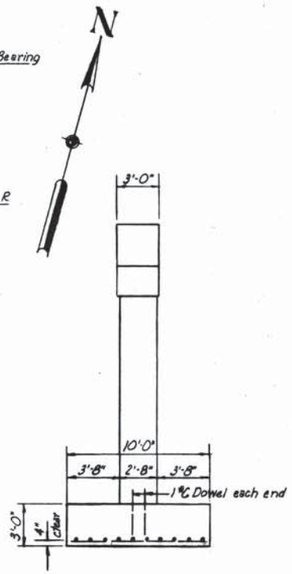

END ELEVATION

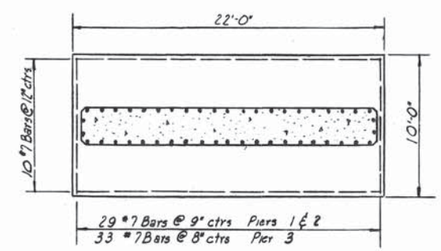

FOOTING PLAN

PIERS

ELEVATIONS		
Point	Abut 1	Abut 2
A	255.79	254.76
B	255.78	254.65
C	255.64	254.44
D	255.37	254.14
E	255.27	254.02
F	255.71	254.68
G	259.24	258.17
H	258.81	257.53
I	262.16	261.11
J	261.99	260.85
K	261.71	260.46
L	261.50	260.15
M	248.19	246.94

	Pier 1	Pier 2	Pier 3
N	255.87	256.44	255.55
O	256.06	256.53	255.54
P	256.12	256.50	255.42
Q	256.07	256.36	255.17
R	255.85	256.34	255.15
S	228.50	234.20	230.50

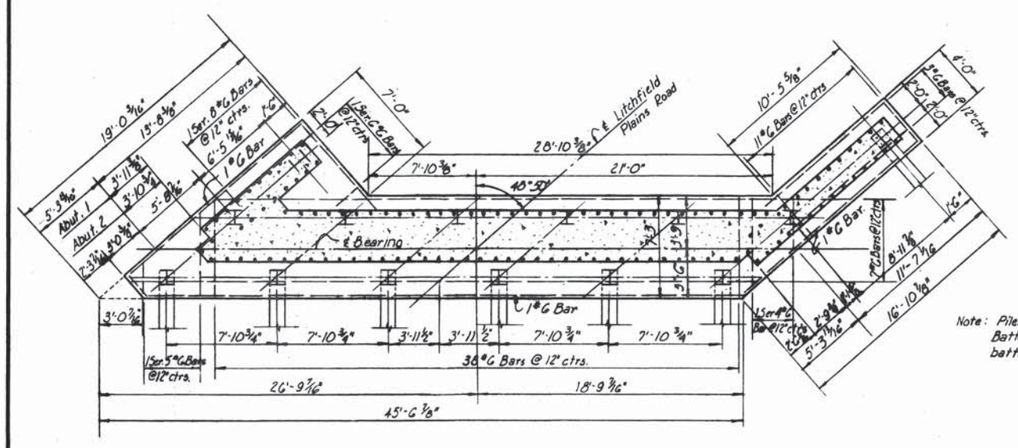

FOOTING PLAN

ABUTMENTS

Note: Piles shall be 10 BP 42
Battered piles shall be battered 3"/ft.

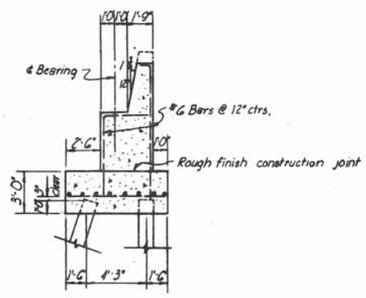

SECTION A-A

DRAWING 73.02.03

	BY	DATE				
MADE	B.K.	2-26-54				
TRACED			2	As-Built	HBH	12-5-56
CHECKED	R.F.S.	3-29-54	1	Piers 1 & 2 Ftg. Elev.	CVA	7-13-55
IN CHARGE OF	IDSK		No.	REVISION	BY	DATE

MAINE TURNPIKE AUTHORITY

MAINE TURNPIKE

SECTION 2 - PORTLAND TO AUGUSTA

STRUCTURE NO. 73 TURNPIKE UNDER
LITCHFIELD PLAINS ROAD
STA. 4855 + 55.17
ABUTMENTS AND PIERS

HOWARD, NEEDLES, TAMMEN & BERGENDOFF
CONSULTING ENGINEERS
NEW YORK KANSAS CITY

SCALE: 3/16" = 1'-0"
CONTRACT NO.
SHEET NO. 325 OF 382

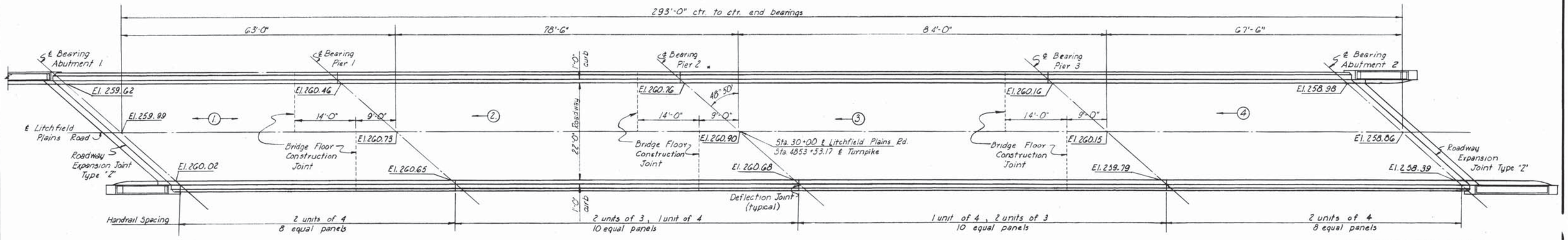

PLAN

Note: Elevations shown are to top of bridge floor.
Use 7" bridge floor (non-composite design) as shown on Std. Dwg. No. 14.
Pouring sequence and direction noted thus. —(1)

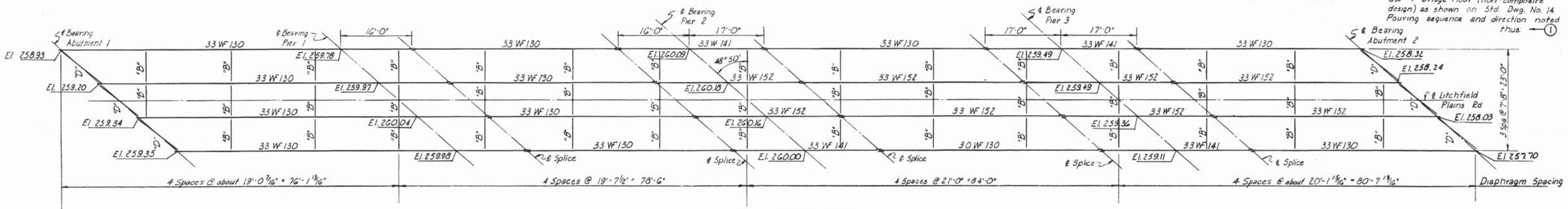

FRAMING PLAN

Elevations shown are to top of beam flanges
Diaphragms are noted by letter "B" & "D"

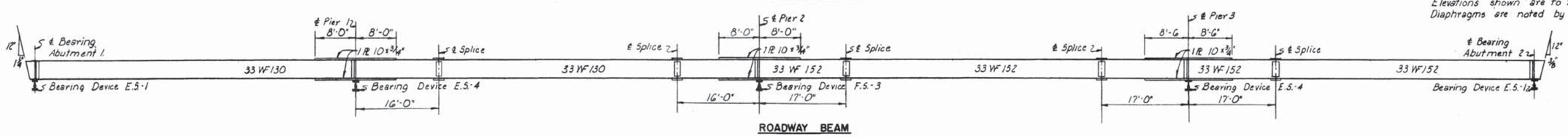

ROADWAY BEAM

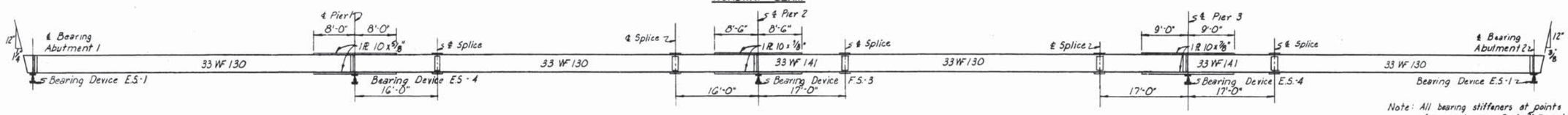

CURB BEAM

Note: All bearing stiffeners at points of support are 7x4x5/8" angles.
Slope shown at ends of beams is with respect to beam axis.

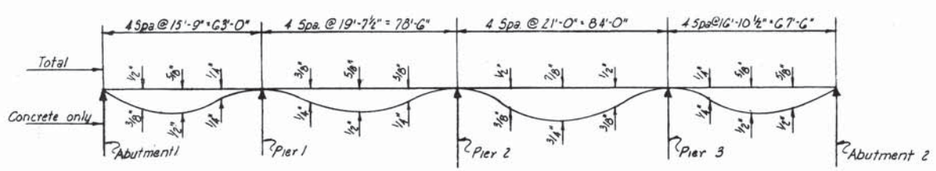

ROADWAY BEAM

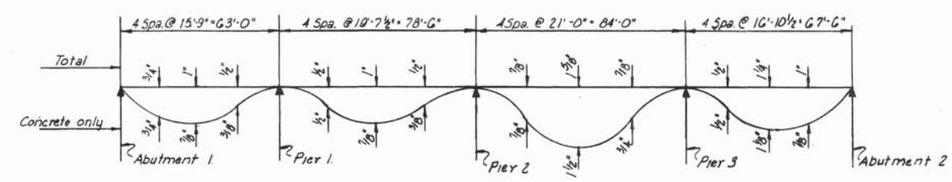

CURB BEAM

CALCULATED DEAD LOAD DEFLECTIONS
(No Scale)

DRAWING 73. 03.03

	BY	DATE				
MADE	B.K.	2-24-54				
TRACED						
CHECKED	RFS	3-29-54	1	As-Built	HBH	12-5-62
IN CHARGE OF I.D.S.K.			No.	REVISION	BY	DATE

MAINE TURNPIKE AUTHORITY
MAINE TURNPIKE
SECTION 2— PORTLAND TO AUGUSTA

STRUCTURE NO. 73 TURNPIKE UNDER
LITCHFIELD PLAINS ROAD
STA. 4853 + 53.17
SUPERSTRUCTURE

HOWARD, NEEDLES, TAMMEN & BERGENDOFF
CONSULTING ENGINEERS
NEW YORK KANSAS CITY

SCALE: 3/32" = 1'-0"
CONTRACT NO. _____
SHEET NO. 326 OF 382