CONTRACT 2015.13

Date:5/13/2015

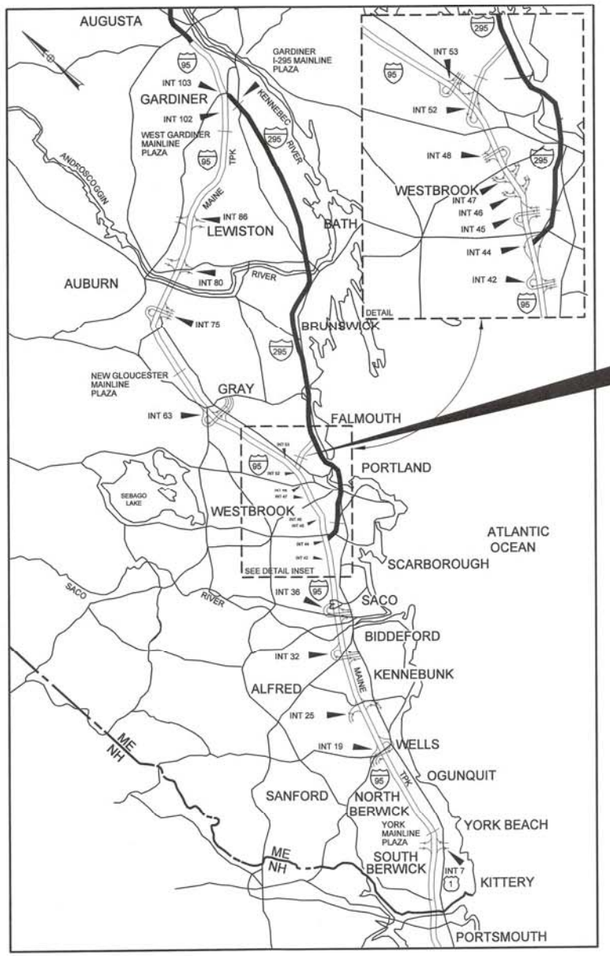

LOCATION MAP

FALMOUTH SPUR TOLL PLAZA
OPEN ROAD TOLLING CONVERSION
(MM F2.8)

MAINE TURNPIKE

THE GOLD STAR
MEMORIAL HIGHWAY

MAINE TURNPIKE AUTHORITY

DANIEL E. WATHEN, CHAIR
JAMES F. CLOUTIER, VICE CHAIR
GERARD P. CONLEY, SR., MEMBER
JOHN E. DORITY, MEMBER
ROBERT D. STONE, MEMBER
FREEMAN R. GOODRICH, MEMBER
KAREN DOYLE, MEMBER EX-OFFICIO

S. PETER MILLS, EXECUTIVE DIRECTOR

FALMOUTH SPUR TOLL PLAZA OPEN ROAD TOLLING CONVERSION (MM F2.8) CONTRACT 2015.13

INDEX OF SHEETS

HIGHWAY

SHEET NO.	DESCRIPTION
1	TITLE SHEET
2	ESTIMATED QUANTITIES
3-4	GENERAL NOTES & EARTHWORK SUMMARY
5-8	TYPICAL SECTIONS AND PAVEMENT DETAILS
9-18	MAINTENANCE OF TRAFFIC
19-20	GUARDRAIL DETAILS
21-24	BARRIER DETAILS
25	DRAINAGE DETAILS
26	MEDAIN OPENING DETAILS
27	EROSION CONTROL DETAILS
28	MISCELLANEOUS DETAILS
29	LIGHTING DETAILS
30-36	GENERAL PLANS
37-44	UTILITY PLANS
45	LIMIT OF DISTURBANCE PLAN
46-56	SIGNING AND STRIPING
57-58	OVERHEAD SIGN DETAILS
59-64	SIGN SUMMARY DETAILS
65-70	PROFILES
71-89	CROSS SECTIONS

STRUCTURAL

SHEET NO.	DESCRIPTION
90-119	STRUCTURAL PLANS

MECHANICAL AND ELECTRICAL

SHEET NO.	DESCRIPTION
120-148	ELECTRICAL PLANS

ARCHITECTURAL

SHEET NO.	DESCRIPTION
149-153	ARCHITECTURAL PLANS

CONTRACT 2015.13

MECHANICAL SYSTEMS ENGINEERS

MECHANICAL DESIGN
MECHANICAL SYSTEMS ENGINEERS
SHEETS E-26 TO E-29

STATE OF MAINE
Kurt F. Magnusson
10257
LICENSED
PROFESSIONAL ENGINEER

KURT MAGNUSSON, P.E. — DATE 5/13/15

Bartlett Design

ELECTRICAL DESIGN
BARTLETT DESIGN
SHEETS E-03, E-04, E-23, E-24 AND E-26

STATE OF MAINE
LAWRENCE E. BARTLETT
No. 7928
LICENSED
PROFESSIONAL ENGINEER

LAWRENCE E. BARTLETT, P.E. — DATE 5/13/15

HNTB

STATE OF MAINE
ROLAND A. LAVALLEE
No. 6452
LICENSED
PROFESSIONAL ENGINEER

ROLAND A. LAVALLEE P.E., PLS
VICE PRESIDENT
DIRECTOR OF OPERATIONS — DATE 5/13/15

APPROVED:

MAINE TURNPIKE AUTHORITY

WILLIAM YATES - DIRECTOR OF INFORMATION SERVICES & COMMUNICATIONS — DATE 5/14/15

STEPHEN R. TARTRE, P.E. - DIRECTOR OF ENGINEERING & BUILDING MAINTENANCE — DATE 5/13/15

Filename: 001_MTATitle.dgn

Item No.	Item Description	Supplemental Description	Unit	Cash Lanes	ORT	Total Quantity
202.071	Removing Asbestos Containing Materials, Electrical Conduit		LS	1		1
202.15	Removing Existing Manhole or Catch Basin		EA		4	4
202.17	Removing Existing Structural Concrete	182 CY	LS	0.5	0.5	1
202.202	Removing Pavement Surface		SY		9500	9500
202.206	Removing Rumble Strips		LF	525		525
203.20	Common Excavation		CY		25300	25300
203.21	Rock Excavation		CY		6830	6830
203.211	Presplitting Rock/Cushion Blasting		LF	3900		3900
203.212	Drilling and Blasting of Solid Rock Subgrade		SY	2800		2800
203.241	Common Borrow, Truck Measure		CY	540		540
203.25	Granular Borrow		CY	2800	5835	8635
205.51	Widening of Existing Shoulder		LF		2565	2565
206.07	Structural Rock Excavation – Drainage and Minor Structures		CY	15		15
206.08	Structural Earth Excavation – Major Structures		CY		2060	2060
206.092	Structural Rock Excavation – Major Structures		CY		160	160
304.09	Aggregate Base Course - Crushed		CY	950	3200	4150
304.10	Aggregate Subbase Course - Gravel		CY		6520	6520
403.207	Hot Mix Asphalt, 19.0 mm Nominal Maximum Size		TON		5450	5450
403.2083	Hot Mix Asphalt, 12.5 mm (Polymer Modified)		TON		2350	2350
403.209	Hot Mix Asphalt, 9.5 mm Nominal Maximum Size (sidewalks, drives, islands & incidentals)		TON		340	340
403.211	Hot Mix Asphalt (shimming)		TON		170	170
403.213	Hot Mix Asphalt, 12.5 mm Nominal Maximum Size, Base		TON		1800	1800
409.15	Bituminous Tack Coat, Applied		GAL		3950	3950
419.30	Sawing Bituminous Pavement		LF		7600	7600
424.323	Asphalt Rubber Fiber Crack Sealer - Applied		LB		950	950
502.231	Structural Concrete, Space Frame Pedestals		CY		35	35
502.232	Structural Concrete, Space Frame Foundations		CY		90	90
502.233	Structural Concrete, Canopy Column Foundations		CY		15	15
502.261	Structural Concrete, ORT Slabs		CY		145	145
502.262	Structural Concrete, Pavement Slabs		CY	185		185
502.263	Structural Concrete, Plaza Islands, Bumpers, and Curtain Walls		CY	155		155
503.14	Epoxy-Coated Reinforcing Steel, Fabricated and Delivered		LB	24060	12000	36060
503.15	Epoxy-Coated Reinforcing Steel, Placing		LB	24060	12000	36060
503.18	Glass Fiber Reinforced Polymer (GFRP) Reinforcing Bars, Fabricated and Delivered		LB	10525	12900	23425
503.19	Glass Fiber Reinforced Polymer (GFRP) Reinforcing Bars, Placing		LB	10525	12900	23425
503.90	Synthetic Fiber Reinforcement		LB	885	750	1635
504.80	Space Frame Canopy, Fabricated and Delivered		LS		1	1
504.81	Space Frame Canopy, Erection		LS		1	1
504.90	Steel Post Support System		LS		1	1
504.91	Mounting Bracket Assemblies		LS		1	1
504.96	Metal Stairs		LS		1	1
506.14	Field Painting of Existing Steel		LS	1		1
506.15	Shop Coating of New Steel		LS	1		1
506.17	Surface Preparation of Existing Steel		LS	1		1
506.18	Containment System and Pollution Control Measures		LS	1		1
506.191	Disposal of Hazardous or Toxic Material		LS	1		1
508.14	High Performance Waterproofing Membrane	500 SY	LS		1	1
511.091	Temporary Earth Support Systems		LS		1	1
515.201	Pigmented Protective Coating for Concrete Surfaces		SY	200		200
515.2011	Pigmented Concrete Protective Coating - Tunnel Walls & Ceiling		SY		400	400
515.2012	Pigmented Concrete Protective Coating - Tunnel Floor		SY		135	135
515.202	Clear Protective Coating for Concrete Surfaces		SY	2000	3380	5380
515.23	Epoxy Overlay		SY		110	110
526.306	Temporary Concrete Barrier Type I - Supplied by the Authority	3600 LF	LS	0.1	0.9	1
526.351	Median Barrier Type I - Precast		LF		1220	1220
526.3511	Median Barrier Type IA - Precast		LF		1600	1600
526.352	Median Barrier Type II - Cast-in-Place		LF		16	16
526.3522	Median Barrier Type II - Precast		LF		174	174
526.353	Median Barrier Type III - Precast		LF		150	150
526.361	Median Barrier Transition Type I - Precast		EA		7	7
526.362	Median Barrier Transition Type II - Precast		EA		2	2
527.306	Center Barrier Crash Attenuator (FasTRACC)		EA		2	2
527.341	Work Zone Crash Cushions - TL-3		UNIT		6	6
535.70	Precast Concrete Tunnel		LS		1	1
535.71	Precast Concrete Utility Pit		EA	2		2

Item No.	Item Description	Supplemental Description	Unit	Cash Lanes	ORT	Total Quantity
603.155	12 inch Reinforced Concrete Pipe - Class III		LF		850	850
603.159	12 inch Culvert Pipe Option III		LF		12	12
603.165	15 inch Reinforced Concrete Pipe - Class III		LF		70	70
603.179	18 inch Culvert Pipe Option III		LF		24	24
603.199	24 inch Culvert Pipe Option III		LF		36	36
603.209	30 inch Culvert Pipe Option III		LF		24	24
603.28	Concrete Collar for Reinforced Concrete Pipe		EA		8	8
604.09	Catch Basin Type B1		EA		9.4	9.4
604.15	Manhole		EA	2.5		2.5
604.26	Catch Basin Type B5		EA		6	6
605.11	12 inch Underdrain Type C		LF		610	610
606.1723	Bridge Transition - Type III		EA		1	1
606.1724	Bridge Transition - Type III, Modified		EA		4	4
606.178	Guardrail Beam		LF		50	50
606.24	Guardrail Type 3d - Single Rail		LF		1275	1275
606.265	Terminal End - Single Rail - Galvanized Steel		EA	2		2
606.278	Terminal End - Anchored End		EA		6	6
606.279	Terminal End - Anchored End, Thrie Beam		EA		2	2
606.352	Reflectorized Beam Guardrail Delineator		EA	125		125
606.353	Delineator Post		EA	60		60
606.354	Delineator Post - Remove and Reset		EA	13		13
606.3605	Guardrail - Remove, Modify and Reset, Single Rail		LF		1575	1575
606.3606	Guardrail - Remove, Modify and Reset, Double Rail		LF		50	50
606.3631	Guardrail - Remove, Stack and Dispose		LF		250	250
606.48	Single Galvanized Steel Post		EA		20	20
606.64	Guardrail Thrie Beam - Double Rail		LF		275	275
606.65	Guardrail Thrie Beam - Single Rail		LF		50	50
606.754	Widen Shoulder for Guardrail 350 Flared Terminal		EA		3	3
606.80	Guardrail 350 FLEAT Terminal		EA		6	6
607.40	Chain Link Fence - 3' High		LF		400	400
607.41	Post Assembly for Sign or Chain Link Fence		EA		56	56
608.08	Reinforced Concrete Sidewalk		SY		87	87
608.26	Curb Ramp Detectable Warning Field		SF		10	10
609.11	Vertical Curb Type 1		LF	32		32
609.12	Vertical Curb Type 1 - Circular		LF	15		15
609.191	Concrete Curb Type 2		LF	60		60
609.237	Terminal Curb Type 1 - 7 ft		EA	2		2
610.08	Plain Riprap		CY	71		71
610.18	Stone Ditch Protection		CY	14		14
610.181	Temporary Stone Check Dam		CY	80		80
613.319	Erosion Control Blanket		SY	2050		2050
615.07	Loam		CY	1600		1600
618.1301	Seeding Method Number 1, Plan Quantity		Unit	1		1
618.1401	Seeding Method Number 2, Plan Quantity		Unit	92		92
618.1411	Seeding Method Number 3, Plan Quantity		Unit	35		35
619.1201	Mulch, Plan Quantity		Unit	126		126
619.1202	Temporary Mulch		LS	1		1
620.58	Erosion Control Geotextile		SY	230		230
625.103	1 1/4 inch Non-metallic Pipe-Flexible		LF		880	880
626.11	Precast Concrete Junction Box		EA	18		18
626.12	Quazite Junction Box		EA	6		6
626.31	18 Inch Foundation		EA		2	2
626.32	24 Inch Foundation		EA	18	10	28
627.681	Temporary 6 Inch Painted Pavement Marking Line - Yellow or White		LF		17000	17000
627.73	Temporary 6 Inch Pavement Marking Tape		LF	4040		4040
627.731	Temporary 6 Inch Black Pavement Marking Tape		LF	2300		2300
627.77	Removing Existing Pavement Marking		SF		6000	6000
627.812	Temporary Raised Pavement Markers		EA		1000	1000
629.05	Hand Labor, Straight Time		HR	20	20	40
631.10	Air Compressor (including operator)		HR	20	20	40
631.11	Air Tool (including operator)		HR	20	20	40
631.12	All Purpose Excavator (including operator)		HR		40	40
631.171	Truck - small (including operator)		HR		40	40
631.18	Chain Saw Rental (including operator)		HR	10		10
631.32	Culvert Cleaner (including operators)		HR	10		10
631.36	Foreman		HR	20	20	40
631.50	Jackhammer (Air Tool Including Operator)		HR	20	20	40
631.51	Bucket Truck		HR	20	20	40
631.52	Scissor Lift		HR	20	20	40
631.53	Electrician		HR	40	40	80
631.54	Electrician's Apprentice		HR	40	40	80
633.021	Propane Service Line		LS	1		1
634.208	Remove and Reset Light Standard		EA	18		18
639.18	Field Office, Type A		EA		1	1
643.711	Lane Use Signal Installation		EA	4		4

Item No.	Item Description	Supplemental Description	Unit	Cash Lanes	ORT	Total Quantity
645.105	Remove and Stack Sign		EA		53	53
645.107	Remove and Stack Canopy Mounted Sign		EA		4	4
645.109	Remove and Reset Sign		EA		3	3
645.121	Overhead Guide Sign: (Sta. 132+50)		LS		1	1
645.122	Overhead Guide Sign: (Sta. 150+50)		LS		1	1
645.131	Bridge Overpass-Mounted Guide Sign: (Sta. 80+60)		LS		1	1
645.151	Cantilever Guide Sign: (Sta. 107+00)		LS		1	1
645.152	Cantilever Guide Sign: (Sta. 120+00)		LS		1	1
645.153	Cantilever Guide Sign: (Sta. 177+00)		LS		1	1
645.154	Cantilever Guide Sign: (Sta. 193+50)		LS		1	1
645.155	Variable Speed Limit Sign		EA		2	2
645.161	Breakaway Device Single Pole		EA		2	2
645.162	Breakaway Device Multi Pole		EA		10	10
645.251	Roadside Guide Signs, Type I		SF		220	220
645.271	Regulatory, Warning, Confirmation and Route Assembly Sign, Type I		SF		375	375
645.289	Steel H-Beam Poles		LB		2905	2905
645.501	Remove and Reset Mainline Sign No. 1		LS		1	1
645.502	Remove and Reset Mainline Sign No. 2		LS		1	1
645.503	Remove and Reset Mainline Sign No. 3		LS		1	1
645.504	Remove and Reset Mainline Sign No. 4		LS		1	1
645.505	Remove and Reset Mainline Sign No. 5		LS		1	1
645.506	Remove and Reset Mainline Sign No. 6		LS		1	1
645.507	Remove and Reset Mainline Sign No. 7		LS		1	1
645.508	Remove and Reset Mainline Sign No. 8		LS		1	1
645.509	Remove and Reset Mainline Sign No. 9		LS		1	1
645.512	Remove and Reset Mainline Sign No. 12		LS		1	1
645.513	Remove and Reset Mainline Sign No. 13		LS		1	1
645.514	Remove and Reset Mainline Sign No. 14		LS		1	1
645.516	Remove and Reset Mainline Sign No. 16		LS		1	1
648.01	Remove and Reset Flagpole		LS		1	1
652.30	Flashing Arrow		EA		4	4
652.301	Flashing Beacon - Solar Powered		EA		2	2
652.312	Type III Barricades		EA	5	5	10
652.33	Drum		EA	110	160	270
652.34	Cone		EA		100	100
652.35	Construction Signs		SF	600	1500	2100
652.361	Maintenance of Traffic Control Devices		LS	0.5	0.5	1
652.38	Flaggers		HR		50	50
652.41	Portable-Changeable Message Sign		EA		4	4
652.45	Truck Mounted Attenuator		CD		60	60
655.01	Installation of ORT Lane Controller Cabinet		EA		2	2
655.012	Installation of Cash Lane Controller Cabinet		EA	5		5
655.02	DVAS Mount Installation		EA	5	4	9
655.03	VCARS Mount Installation		EA		12	12
655.04	Installation of Sensor Loops		LS	0.5	0.5	1
655.05	Installation of AVI Antennas		EA		11	11
655.06	Installation of AVI Readers		EA		2	2
655.061	Relocation of AVI Readers		EA	1		1
655.07	Traffic Control Pedestal Preparation Work		EA	5		5
655.09	Armored Cable - 10/3		LF	100		100
655.10	#4 AWG Wire		LF	3200	2350	5550
655.101	#6 AWG Wire		LF	9100		9100
655.11	#10 AWG Wire		LF	5000	500	5500
655.12	#12 AWG Wire		LF	8000	16500	24500
655.13	#14 AWG Wire		LF		14000	14000
655.14	4pr/24 (Category 5e) Cable		LF		7400	7400
655.15	LMR 400 Cable		LF		1330	1330
655.16	6 Strand Multi-modal Fiber Optic Cable		LF	900	1200	2100
655.17	IVIS Homerun Loop Cable (IMSA 50-2 #16)		LF	5800		5800
655.18	Half Diamond Loop Wire (#16 XHHW or XLP Stranded Wire)		LF		400	400
655.19	500 MCM Wire		LF	1050		1050
655.191	50 Pair 24AWG Telephone Cable - PE89 Direct Burial		LF	350		350
655.200	1 1/2" Schedule 40 PVC Conduit		LF		160	160
655.201	3" Schedule 40 PVC Conduit		LF	3850	80	3930
655.202	4" Schedule 40 PVC Conduit		LF	1200	100	1300
655.2021	1" Schedule 80 PVC Conduit		LF	100	120	220
655.203	1 1/2" Schedule 80 PVC Conduit		LF	400	500	900
655.2031	2" Schedule 80 PVC Conduit		LF	5050		5050
655.204	3" Schedule 80 PVC Conduit		LF	4050	1300	5350
655.205	4" Schedule 80 PVC Conduit		LF		300	300
655.2051	6" Schedule 80 PVC Conduit		LF		100	100
655.206	1" Galvanized Rigid Metal Conduit		LF	200	400	600
655.207	1 1/2" Galvanized Rigid Metal Conduit		LF	150	200	350
655.208	3" Galvanized Rigid Metal Conduit		LF		550	550
655.209	1/2" Liquid Tight Metallic Flexible Conduit		LF		400	400

Item No.	Item Description	Supplemental Description	Unit	Cash Lanes	ORT	Total Quantity
655.210	3/4" Liquid Tight Metallic Flexible Conduit		LF		270	270
655.2101	1 1/2" Liquid Tight Metallic Flexible Conduit		LF	100		100
655.2102	2" Liquid Tight Metallic Flexible Conduit		LF	100		100
655.211	1 1/2" Electrical Metallic Tubing Conduit		LF	40		40
655.212	2" Electrical Metallic Tubing Conduit		LF	80		80
655.213	3" Electrical Metallic Tubing Conduit		LF	40		40
655.214	4" Electrical Metallic Tubing Conduit		LF		40	40
655.215	3/4" Electrical Metallic Tubing Conduit		LF		50	50
655.221	Type A Pull Box Inside		EA	8		8
655.222	Type C Pull Box in Tunnel		EA	18		18
655.223	Type D Pull Box Outdoor Canopy		EA	4		4
655.224	Type E Pull Box Steel in booth		EA	8		8
655.225	Type F Pull Box Outside		EA	20		20
655.30	12" x 12" x 6" Galvanized Junction Box		EA		62	62
655.31	18" x 18" x 6" Galvanized Junction Box		EA		4	4
655.40	24" x 24" x 12" Junction Box		EA		6	6
655.42	36" x 30" x 20" NEMA 4X Cabinet		EA		2	2
655.43	60 AMP Panelboard Cabinet		EA	4	2	6
655.51	4" Schedule 80 PVC Conduit Condulets		EA		4	4
655.52	1" Rigid Metal Conduit Condulets		EA		40	40
655.53	1½" Rigid Metal Conduit Condulets		EA		20	20
655.55	3" Electrical Metal Tubing Condulets		EA		32	32
655.63	4-inch x 4-inch Plastic NEMA 4R Wireway		LF	50	50	100
655.64	6-inch x 6-inch Plastic NEMA 4R Wireway		LF	200	200	400
655.71	Removal of Existing Select Toll Equipment		LS	0.5	0.5	1
655.75	Concrete Encased Conduit		CY	10	80	90
655.80	Lightning Suppression System		LS	0.5	0.5	1
655.81	Key Switch		EA	12		12
655.82	Duplex Receptacle		EA	14		14
655.83	NEMA L5-30R Receptacle		EA	4		4
655.84	Quadplex Receptacle		EA	12		12
655.85	Electrical/Communications Vault/Manhole		EA	4		4
655.90	Space Frame Lighting		LS	0.5	0.5	1
655.91	LED Replacement Canopy Light Fixture		EA	4		4
655.92	LED Canopy Light Fixture		EA	4		4
655.93	Tunnel Life Safety		LS		1	1
656.50	Baled Hay, in place		EA		50	50
656.60	Temporary Berms		LF		2100	2100
656.62	Temporary Slope Drains		LF		150	150
656.632	30" Temporary Silt Fence		LF	8000		8000
659.10	Mobilization		LS	0.5	0.5	1
670.01	Sewage Disposal Replacement System		LS	1		1
800.10	Electrical Demolition		LS	0.5	0.5	1
800.15	Temporary Power Relocation		LS	1		1
800.20	Mechanical Demolition		LS	0.5	0.5	1
800.22	HVAC Tunnel and Booths		LS	0.5	0.5	1
800.30	Toll Plaza Demolition and Restoration		LS		1	1
800.31	Temporary Parking Lot		LS	1		1
800.40	Tunnel Enclosures		LS		1	1
800.50	New Westbound Toll Booths and Canopy		LS	1		1

Date:5/15/2015

Filename: 002_EstimatedQuantities.dgn

Scale:

No.	Revision	By	Date

Designed by:

HNTB

CONSULTANT PROJECT MANAGER: R. Bruce Munger, P.E.

	By	Date		By	Date
Designed	TMH	05/15	Checked	RBM	05/15
Drawn	MPC	05/15	In Charge of	RAL	05/15

HNTB CORPORATION
340 County Road, Suite 6-C
Westbrook, ME 04092
TEL (207) 774-5155
FAX (207) 228-0909

MAINE TURNPIKE

THE GOLD STAR MEMORIAL HIGHWAY

MTA PROJECT MANAGER: William Yates

FALMOUTH SPUR TOLL PLAZA
ORT CONVERSION

ESTIMATED QUANTITIES
AND EARTHWORK SUMMARY

SHEET NUMBER: --

CONTRACT:2015.13

GENERAL

1. ALL DETAILS SHALL BE IN CONFORMANCE WITH MAINE DEPARTMENT OF TRANSPORTATION (MaineDOT) STANDARD DETAILS HIGHWAYS AND BRIDGES 2002 WITH UPDATES AND MaineDOT BEST MANAGEMENT PRACTICES FOR EROSION AND SEDIMENT CONTROL LATEST REVISION UNLESS OTHERWISE INCLUDED IN THESE PLANS.

2. CONTRACTOR IS REQUIRED TO MAINTAIN ACCESS TO ALL DRIVEWAYS AND SIDE ROADS DURING CONSTRUCTION UNLESS OTHERWISE SHOWN ON THE PLANS.

3. THE CONTRACTOR SHALL SUBMIT THE PROPOSED STAGING AREA(S) AND FIELD TRAILER LOCATION TO THE RESIDENT FOR APPROVAL PRIOR TO STARTING WORK.

4. UPON REQUEST, THE MTA WILL SUPPLY ORIGINAL CONTRACT PLANS OF THE FALMOUTH SPUR PLAZA TO THE CONTRACTOR.

5. CONTRACTOR IS REQUIRED TO MAINTAIN SAFE ACCESS TO PARKING AREAS FOR MTA EMPLOYEES AT ALL TIMES DURING CONSTRUCTION.

6. A COPY OF THE "GEOTECHNICAL REPORT" DATED APRIL, 2015 IS AVAILABLE FOR DOWNLOAD AT MAINETURNPIKE.COM.

7. DUST CONTROL IS INCIDENTAL TO CONTRACT.

8. WASTE MATERIALS SHALL BE DISPOSED OF OFF THE PROJECT SITE, IN ACCORDANCE WITH CHAPTER 404, DEPARTMENT OF ENVIRONMENTAL PROTECTION SOLID WASTE MANAGEMENT RULES.

9. FINAL LIFTS OF PAVEMENT FOR ORT LANES, CASH LANES, AND APPROACHES WILL BE COMPLETED AT THE END OF PROJECT TO LIMIT PAVEMENT JOINTS.

10. BASELINE IS BASED ON FIELD SURVEY AND DOES NOT MATCH ORIGINAL FALMOUTH SPUR CONSTRUCTION BASELINE FROM THE 1950'S. THE FIELD SURVEY BASELINE IS A BEST FIT CENTERLINE OF THE TOLL PLAZA.

11. 6 PAVEMENT CORES WERE TAKEN ALONG BOTH APPROACHES TO THE PLAZA. CORES INDICATE 11 INCHES OF BITUMINOUS PAVEMENT EXIST. AS BUILT PLANS INDICATE 4 INCHES OF MACADAM EXISTS. EXISTING PAVEMENT EXCAVATION IN SHOULDERS ASSUME 5 INCHES OF HMA AND 3 INCHES OF MACADAM.

12. CLEARING LIMITS ARE AS SHOWN ON THE PLANS UNLESS OTHERWISE AUTHORIZED BY THE RESIDENT. THE ACTUAL CLEARING LINES SHALL BE ESTABLISHED BY THE CONTRACTOR AND APPROVED BY THE RESIDENT PRIOR TO ANY CLEARING TAKING PLACE. CLEARING SHALL BE INCIDENTAL TO THE CONTRACT. NOTE ACTUAL TREE LINE MAY VARY DUE TO CLEARING EFFORTS BY THE AUTHORITY. TREE CLEARING MAY NOT OCCUR BETWEEN JULY AND AUGUST.

EROSION CONTROL

1. THE ANTICIPATED EROSION CONTROL DEVICES ARE SHOWN ON THE PLANS. THE CONTRACTOR SHALL PROPOSE ACTUAL TYPE AND LOCATION OF DEVICES FOR APPROVAL BY THE RESIDENT. ADDITIONAL MEASURES MAY BE PROPOSED BY THE CONTRACTOR DUE TO SITE OR WEATHER CONDITIONS. THE RESIDENT MAY DIRECT THE CONTRACTOR TO IMPLEMENT ADDITIONAL MEASURES. ANY ADDITIONAL MEASURES APPROVED BY THE RESIDENT WILL BE MEASURED FOR PAYMENT.

2. 4" LOAM HAS BEEN ESTIMATED FOR 100% OF THE DISTURBED SLOPE AREA UNLESS OTHERWISE SPECIFIED ON THE PLANS. ACTUAL PLACEMENT OF THE LOAM SHALL BE AS DESIGNATED BY THE RESIDENT.

3. NEWLY DISTURBED EARTH SHALL BE MULCHED BY THE END OF EACH WORK DAY. MULCH SHALL BE MAINTAINED ON A DAILY BASIS. THIS WORK SHALL BE PAID FOR UNDER ITEM 619.1202 TEMPORARY MULCH.

4. ALL TEMPORARY AND PERMANENT EROSION CONTROL DEVICES SHALL BE INSTALLED IN ACCORDANCE WITH THE MAINE DEPARTMENT OF TRANSPORTATION BEST MANAGEMENT PRACTICES.

5. TEMPORARY SEED SHALL BE APPLIED TO ALL DISTURBED AREAS THAT WILL NOT BE COMPLETED WITHIN 30 DAYS.

6. TEMPORARY EROSION CONTROL BLANKET, ITEM 613.319 SHALL BE INSTALLED IN ALL DITCHES AND 2:1 SLOPES FROM TOP TO TOE OF SLOPE. LOAM AND SEED SHALL BE PLACED PRIOR TO THE INSTALLATION OF THE EROSION CONTROL BLANKET. LIMITS OF THE EROSION CONTROL BALNKET IN DITCHES SHALL BE 6' WIDE OR AS DESIGNATED BY THE RESIDENT. SEEDING METHOD NO. 3 SHALL BE USED BEHIND GUARDRAIL AND SEEDING METHOD NO. 1 SHALL BE USED AT AND AROUND THE PLAZA BUILDING. ALL OTHER AREAS SHALL BE SEEDED WITH METHOD NO. 2.

UTILITY

1. EXISTING UTILITIES ON THESE PLANS WERE COMPILED FROM FIELD SURVEY AND VARIOUS OTHER SOURCES. LOCATIONS ARE NOT GUARANTEED TO BE ACCURATE NOR IS IT GUARANTEED THAT ALL UTILITIES ARE SHOWN. NO SEPARATE OR ADDITIONAL COMPENSATION WILL BE ALLOWED TO THE CONTRACTOR DUE TO ANY VARIANCE BETWEEN THE DATA SHOWN ON THE PLANS AND THE ACTUAL FIELD CONDITIONS ENCOUNTERED. NO WORK SHALL BE STARTED UNTIL THE OWNERS OF THE VARIOUS UTILITIES ARE NOTIFIED BY THE CONTRACTOR OF THE PROPOSED CONSTRUCTION. THE CONTRACTOR IS ALSO REQUIRED TO CALL DIG SAFE AT 1-888-344-7233 PRIOR TO THE START OF THE WORK.

2. THE UTILITIES INVOLVED IN THIS CONTRACT ARE:
   MAINE TURNPIKE AUTHORITY
   CENTRAL MAINE POWER
   FAIRPOINT COMMUNICATION

THE AUTHORITY IS RESPONSIBLE FOR MARKING MTA UTILITIES PRIOR TO CONSTRUCTION.

3. THE CONTRACTOR SHALL NOTIFY THE RESIDENT 10 DAYS PRIOR TO CONSTRUCTION SO THE RESIDENT CAN ARRANGE FOR MAINE TURNPIKE UNDERGROUND UTILITY LOCATION. ALL PROPOSED SIGN LOCATIONS AND EXCAVATION LOCATIONS SHALL BE MARKED AT THE NOTIFICATION TIME. EXCAVATION WILL NOT BE PERMITTED UNTIL THE AUTHORITY HAS LOCATED AND MARKED ITS' UNDERGROUND UTILITIES, OR NOTIFIED THE RESIDENT THERE ARE NO UNDERGROUND UTILITIES IN THE MARKED AREAS.

THE AUTHORITY HAS PROGRAMMED TWO FIELD VISITS FOR MAINE TURNPIKE UTILITY COORDINATION ON THIS PROJECT. SHOULD THE CONTRACTOR NEED ADDITIONAL SIGN LOCATIONS AND/OR ADDITIONAL EXCAVATION LOCATIONS MARKED, OR SHOULD THE CONTRACTOR FAIL TO MAINTAIN THE AUTHORITY'S PREVIOUSLY ESTABLISHED DIG SAFE MARKS, THE AUTHORITY SHALL DEDUCT THE ADDED MARKING COSTS FROM THE CONTRACTOR'S PAYMENTS.

4. UTILITY WORK INCLUDES TEMPORARY AND PERMANENT POWER AND COMMUNICATIONS RELOCATIONS; RELOCATION OF EXISTING HIGHWAY LIGHTING; RELOCATION OF EXISTING WATER SERVICE; AND INSTALLATION OF NEW SEPTIC SYSTEM.

GUARDRAIL

1. CONTRACTOR SHALL STOCKPILE ALL GUARDRAIL TO BE REMOVED AND RESET, REMOVED AND STACKED AND REMOVED, MODIFIED AND RESET UNTIL GUARDRAIL INSTALLATION HAS BEEN COMPLETE. STOCKPILING THE GUARDRAIL SHALL BE INCIDENTAL TO ITEM 606.3631 GUARDRAIL - REMOVE AND DISPOSE. ALL USABLE EXISTING GUARDRAIL SHALL BE MODIFIED AND RESET PRIOR TO BEING PAID TO INSTALL NEW GUARDRAIL. ANY USABLE GUARDRAIL REMAINING AFTER ALL GUARDRAIL HAS BEEN INSTALLED SHALL BE DELIVERED TO CROSBY MAINTENANCE AT MILE MARKER 45.8, SB.

2. FOR ALL NEW GUARDRAIL TYPES 3d W-BEAM AND THRIE-BEAM SINGLE AND DOUBLE RAIL - OFFSET BLOCKS SHALL BE NON-WOOD CONFORMING TO NCHRP 350 TEST LEVEL 3.

3. ALL PROPOSED GUARDRAIL AND RESET GUARDRAIL SHALL BE INSTALLED IN A MANNER TO AVOID ELECTRICAL AND DRAINAGE STRUCTURES.

4. DAMAGE TO EXISTING PAVEMENT OR NEW PAVEMENT DUE TO THE INSTALLATION OF NEW OR RESET GUARDRAIL SHALL BE REPAIRED AND PAYMENT SHALL BE INCIDENTAL TO THE GUARDRAIL ITEMS.

5. CONTRACTOR SHALL NOTE THE TEMPORARY MEDIAN OPENINGS ARE REQUIRED FOR LIVE ORT LANE TESTING AND STAGE GUARDRAIL INSTALLATION ACCORDINGLY. REFER TO MAINTENANCE OF TRAFFIC PLANS AND SPECIAL PROVISIONS.

6. FOR GUARDRAIL WORK (STA. 152+00 TO 159+00) LANE CLOSURE WILL NOT BE ALLOWED BEYOND STATION 152+00 UNTIL THE ADJACENT MTA PAVING PROJECT-CONTRACT 2015.01 IS COMPLETED. THE ANTICIPATED COMPLETION DATE IS JULY 31ST, 2015.

7. EXISTING TUBULAR MARKERS SEPARATING OPPOSING TRAFFIC IN THE TOLL PLAZA SHALL BE REMOVED DURING PHASE 1 TRAFFIC CONTROL AND STACKED AT CROSBY MAINTENANCE AT MILE MARKER 45.8 SB.

8. AT THE END OF THE WORK DAY, EVERYDAY, THE CONTRACTOR IS REQUIRED TO HAVE AN APPROVED CRASHWORTHY END TREATMENT ON ALL GUARDRAIL AND BARRIER WITHIN ALL WORK AREAS THAT ARE ACCESSIBLE TO TRAFFIC.

9. CONNECTIONS FOR PROPOSED GUARDRAIL TO EXISTING GUARDRAIL SHALL BE INCIDENTAL TO THE PROPOSED GUARDRAIL ITEMS.

10. TWO GUARDRAIL DELINEATOR POSTS SHALL BE INSTALLED AT EACH FLEAT.

11. ALL NEW AND RESET GUARDRAIL TYPE 3d SHALL BE INSTALLED AT 30 INCHES HIGH EXCEPT WHERE TRANSITIONING TO EXISTING RAIL.

SIGN STRUCTURES/FOUNDATIONS

1. THESE NOTES APPLY ONLY TO OVERHEAD SIGN STRUCTURES. FOR ORT SPACE FRAME NOTES, SEE SHEET S-14.

2. THE CONTRACTOR SHALL DESIGN THE FOUNDATION FOOTINGS FOR NEW SIGN STRUCTURES IN ACCORDANCE WITH THE GEOTECHNICAL INFORMATION PROVIDED.

3. ANY NECESSARY FINE GRADING AROUND SIGN STRUCTURE FOUNDATIONS SHALL NOT BE PAID FOR DIRECTLY BUT SHALL BE INCIDENTAL TO THE INSTALLATION OF THE FOUNDATION.

4. AT LOCATIONS WHERE A MEDIAN FOUNDATION IS REQUIRED, THE FOOTPRINT OF THE DESIGNED FOUNDATION SHALL NOT EXTEND INTO THE SHOULDER OF THE ROADWAY AND SHALL BE TEMPORARILY OR PERMANENTLY CASED.

5. THE TOP OF SIGN STRUCTURE FOUNDATIONS SHALL BE AT LEAST 3 INCHES BUT NO MORE THAN 18 INCHES ABOVE THE GRADE. MEASUREMENT SHALL BE MADE FROM THE HORIZONTAL FOUNDATION FACE LEAST EXPOSED ON A SLOPE.

6. NEW FOUNDATIONS SHALL BE INSTALLED SUCH THAT THE MINIMUM VERTICAL CLEARANCE TO THE BOTTOM OF THE LOWEST SIGN IS AT LEAST 18'-0" FROM THE HIGH POINT OF THE ROADWAY. THE MAXIMUM VERTICAL CLEARANCE TO THE BOTTOM OF THE LOWEST SIGN SHALL NOT EXCEED 20'-6".

7. ANY NECESSARY DEWATERING OF FOUNDATION EXCAVATIONS SHALL NOT BE PAID BUT SHALL BE INCIDENTAL TO THE INSTALLATION OF THE FOUNDATIONS.

8. IF SOIL CONDITIONS DIFFER MATERIALLY FROM THOSE SHOWN ON THE GEOTECHNICAL BORING LOGS, THE CONTRACTOR SHALL STOP WORK ON THAT STRUCTURE'S FOUNDATIONS AND CONTACT THE RESIDENT.

9. ALL SIGN STRUCTURE DESIGNS SHALL CONFORM TO THE LATEST EDITION OF THE STANDARD SPECIFICATIONS FOR STRUCTURAL SUPPORTS FOR HIGHWAY SIGNS, LUMINAIRES AND TRAFFIC SIGNALS, AS PUBLISHED BY THE AMERICAN ASSOCIATION OF STATE HIGHWAY TRANSPORTATION OFFICIALS (AASHTO).

10. NEW SIGN ATTACHMENT HARDWARE SHALL BE PROVIDED TO ATTACH NEW AND RELOCATED OVERHEAD SIGNS TO THE NEW SIGN STRUCTURES.

11. DESIGN, FABRICATION AND INSTALLATION FOR ALL OVERHEAD AND CANTILEVER SIGN SUPPORTS INCLUDING THE STEEL TRUSS, FOUNDATIONS AND ATTACHMENT HARDWARE SHALL BE INCLUDED IN THE LUMP SUM ITEM COST FOR THE APPLICABLE STRUCTURE.

12. IF TEMPORARY SHEETING IS REQUIRED IT SHALL BE INCIDENTAL TO THE SIGN SUPPORT STRUCTURE AND SHALL MEET THE REQUIREMENTS UNDER SECTION 511. TEMPORARY SHEETING IS REQUIRED IF THE EXCAVATED SLOPES CAN NOT MEET OSHA REQUIREMENTS. NO DISTURBING OR UNDERMINING OF TURNPIKE PAVEMENT SHALL BE ALLOWED.

13. PASSING LANE CLOSURES BOTH EASTBOUND AND WESTBOUND AND TEMPORARY CONCRETE BARRIER IN MEDIAN SHOULDERS ARE REQUIRED PRIOR TO REMOVING AND RESETTING EXISTING MEDIAN GUARDRAIL AND INSTALLING PROPOSED GUARDRAIL ITEMS AND SIGN BRIDGE. TO PROTECT TEMPORARY CONCRETE BARRIER ENDS, BARRIER SHALL BE LAPPED BEHIND EXISTING OR PROPOSED GUARDRAIL. SEE MAINTENANCE OF TRAFFIC DETAILS AND OVERHEAD SIGN PLANS OH-1 AND OH-2.

EARTHWORK

1. CLEARING LIMIT LINES ARE SHOWN ON THE PLANS 10' BEYOND AND PARALLEL TO THE CONSTRUCTION SLOPE LINES AND ARE FOR REFERENCE ONLY. THE MAINE TURNPIKE WILL BE COMPLETING A MAJORITY OF THE CLEARING REQUIRED. ACTUAL TREE LINE MAY VARY DUE TO CLEARING EFFORTS.

2. EXCAVATIONS ACCOMPLISHED AS PART OF THIS PROJECT SHALL BE CONSTRUCTED IN ACCORDANCE WITH OSHA SUBPART P OF 29 CFR PART 1926.650-652 (CONSTRUCTION STANDARDS FOR EXCAVATION).

3. AN OVERBURDEN DEPTH OF 1' IS ASSUMED FOR USE IN ESTIMATING ROCK EXCAVATION AND ESTIMATING CLEARING LIMITS WHERE ROCK OUTCROPS ARE PRESENT IN SHOULDER WIDENING AREAS. ROCK PROBES WERE NOT CONDUCTED IN THESE AREAS TO VERIFY OR DETERMINE DEPTH OF EXISTING OVERBURDEN. ACTUAL ROCK EXCAVATION AND CLEARING LIMITS MAY CHANGE FROM WHAT IS SHOWN ON PLANS.

4. THE CONTRACTOR SHALL REMOVE EXISTING MACADAM WHEN ENCOUNTERED AND SHALL BE PAID FOR AS COMMON EXCAVATION ITEM 203.20.

DRAINAGE

1. NO EXISTING DRAINAGE SHALL BE ABANDONED, REMOVED OR PLUGGED WITHOUT PRIOR APPROVAL OF THE RESIDENT.

2. INLETS AND OUTLETS OF ALL CULVERTS SHALL BE RIPRAPPED UNLESS OTHERWISE NOTED ON THE PLANS OR DIRECTED BY THE RESIDENT.

3. ALL DITCH ELEVATIONS AND OFFSETS SHOWN ON THE CROSS SECTIONS ARE FOR THE FINISHED DITCH FLOW LINE.

4. ANY NECESSARY CUTTING OF EXISTING PIPES TO FIT IN AREAS OF PROPOSED CATCH BASINS AND MANHOLES WILL NOT BE PAID FOR SEPARATELY, BUT SHALL BE INCIDENTAL TO THE PROPOSED CATCH BASIN AND MANHOLE ITEMS.

5. ANY NECESSARY CUTTING OF EXISTING CATCH BASINS TO TAKE A PROPOSED PIPE WILL NOT BE PAID FOR SEPARATELY AND SHALL BE INCIDENTAL TO THE PROPOSED CULVERT ITEMS.

6. EXISTING CULVERTS TO REMAIN SHALL BE CLEANED AS DIRECTED BY THE ENGINEER. PAYMENT WILL BE MADE UNDER ITEM 631.32 CULVERT CLEANER (INCLUDING OPERATORS).

7. ALL NEW CATCH BASIN GRATES SHALL BE AS MANUFACTURED BY EJ COMPANY OF BROCKTON, MA.

8. ONE RED DELINEATOR POST SHALL BE INSTALLED AT ALL UNDERDRAIN AND STORM DRAIN OUTLETS.

MAINTENANCE OF TRAFFIC

1. CANOPY LIGHT ABOVE CLOSED LANES SHALL BE RED.

2. CANOPY SIGNAGE ABOVE CLOSED LANES SHALL BE COVERED.

3. CONTRACTOR SHALL MAINTAIN A 5' WIDE PATHWAY FOR MTA EMPLOYEES TO ACCESS PLAZA BUILDING AND TOLL BOOTHS TO CROSS WORK ZONES SAFELY DURING ALL PHASES OF WORK. THIS MAY REQUIRE BREAKS IN BARRIER, USE OF BARRELS, SAFETY TAPE DELINEATING PATHS AND TEMPORARY SIGNAGE. THE PATH SHALL BE LIGHTED FROM DUSK TO DAWN AND FREE FROM TRIP HAZARDS. LIGHTING, SIGNAGE AND SAFETY TAPE SHALL BE INCIDENTAL TO ITEM 659.10 MOBILIZATION.

4. REFER TO APPENDIX C OF SPECIFICATIONS FOR PLAZA SAFETY REQUIREMENTS.

MEDIAN BARRIER

1. MEDIAN BARRIER PAY LIMITS ARE LISTED ON THE CONCRETE BARRIER DETAIL SHEETS BAR-07.

2. PAY LIMITS ARE MEASURED TO THE CENTER OF BARRIER FOR ALL BARRIER EXCEPT TYPE-III WHICH IS MEASURED TO THE FLAT FACE.

TOLLING - ORT

1. THE CONTRACTOR SHALL REMOVE AND LEGALLY DISPOSE THE FOLLOWING ITEMS FROM LANES 1, 2, 3, 4, 5, AND 6:
   A. TREADLE FRAME
   B. BOOTH DIRTY POWER PANELS
   C. ASSOCIATED WIRING, CONDUIT, COUPLINGS AND ATTACHMENT HARDWARE FOR POWER AND COMMUNICATION LINES
   D. LANE CONTROLLER ENCLOSURE

2. THE CONTRACTOR SHALL SALVAGE THE FOLLOWING ITEMS AND DELIVER TO THE MAINE TURNPIKE SIGN SHOP AT MILE MARKER 58.3, NB.:
   A. SIGNS TO BE REMOVED
   B. LIGHTING FIXTURES MOUNTED UNDERNEATH CANOPY
   C. CANOPY MOUNTED SIGNS AND BRACKETS
   D. MISCELLANEOUS ITEMS INSIDE BOOTHS A, B AND C (COUNTERS, DOORS, HEATERS, ETC.) AS DIRECTED BY THE RESIDENT.
   E. RED/GREEN CANOPY LANE SIGNAL FOR LANES 1, 2, 3, 4, 5 AND 6
   F. FLASHING YELLOW USE SIGNAL AT ISLANDS A, B AND C.
   G. RED CANOPY LANE SIGNALS FROM LANES 1, 2, 3, 4, 5, 6 DEPARTURE SIDE.
   H. PATRON FARE DISPLAY
   I. ISLAND TRAFFIC SIGNAL AND MOUNTING POLES
   J. LIGHT CURTAINS, HEIGHT DETECTORS AND ENCLOSURES
   K. VIOLATION ENFORCEMENT SYSTEM (VES CAMERAS, LIGHTS AND MOUNTING HARDWARE AND PEDESTALS)

3. THE CONTRACTOR SHALL SALVAGE FROM LANES 1, 2, 3 AND 4 THE FOLLOWING ITEMS AND DELIVER TO THE TRANSCORE WAREHOUSE AT TRANSCORE INC., 1190 RIVERSIDE ST. SUITE 3B, PORTLAND, ME:
   A. CANOPY OVERRIDE SWITCH
   B. AVI ANTENNAS
   C. TREADLE INSERT
   D. OVERHEAD SCANNER IF PRESENT
   E. LANE CONTROLLERS

4. TRANSCORE SHALL PROVIDE THE FOLLOWING ITEMS TO BE INSTALLED BY THE CONTRACTOR:
   A. VCARS CAMERAS
   B. ENCLOSURES AND MOUNTING KITS FOR VCARS
   C. IVIS LOOP SENSORS AND ASSOCIATED TEMPLATES FOR CUTTING CONCRETE (EXCEPT HALF DIAMOND SENSORS)
   D. LOCTITE EPOXY AND MACHINE FOR INSTALLATION OF EPOXY FOR LOOPS
   E. 2 ORT HOFFMAN CABINETS (TUNNEL ENCLOSURES)
   F. MOUNTING CLEATS FOR ORT CABINETS
   G. COSTAR ENCLOSURES AND PELCO MOUNTING HOOKS FOR DVAS CAMERAS

5. THE CONTRACTOR SHALL PROVIDE AND INSTALL THE FOLLOWING ITEMS:
   A. AVI ANTENNA BRACKETS FOR MOUNTING TO 2" PIPE
   B. 2 ENCLOSURES FOR AVI READERS
   C. ALL REQUIRED JUNCTION BOXES, CONDUIT AND ASSOCIATED WIRING
   D. LEVELING PAD FOR ORT CABINETS
   E. HOMERUN CABLES FOR IVIS LOOP SENSORS
   F. WIRING FOR HALF DIAMOND SENSORS

6. THE FOLLOWING ITEMS ARE TO REMAIN:
   A. UPS AND CLEAN POWER PANEL IN BUILDING

7. THE MAINE TURNPIKE SHALL PROVIDE THE FOLLOWING ITEMS TO BE INSTALLED BY THE CONTRACTOR:
   A. 10 AVI ANTENNAS AND LANE KITS
   B. 2 AVI READERS (MTA RESPONSIBLE FOR LANE TUNING AND READER SYNCHRONIZATION)

8. TRANSCORE SHALL PROVIDE, INSTALL AND TERMINATE THE FOLLOWING ITEMS:
   A. DVAS CAMERAS
   B. NEW ORT LANE SERVERS AND ASSOCIATED CONTROLLERS AND SWITCHES

9. TRANSCORE SHALL REMOVE AND SALVAGE THE FOLLOWING ITEMS:
   A. MANUAL LANE TERMINAL
   B. RF MODULES FROM EXISTING AVI READER
   C. RECEIPT PRINTERS
   D. LANE CONTROLLER COMPUTERS FROM LANE CONTROLLER ENCLOSURES

10. THE CONTRACTOR SHALL SUBMIT A PROPOSED METHOD OF ATTACHING ALL ANCILLARY COMPONENTS TO THE SPACE FRAME TO THE RESIDENT FOR APPROVAL. THE PROPOSED ATTACHMENT METHOD SHALL NOT REQUIRE DRILLING, WELDING OR OTHER ATTACHMENT METHODS THAT WILL DAMAGE THE SPACE FRAME OR ITS GALVANIZED COATING. ANY AREAS OF GALVANIZED COATING THAT ARE DAMAGED BY THE CONTRACTOR DURING INSTALLATION OF ANCILLARY COMPONENTS SHALL BE REPAIRED IN ACCORDANCE WITH ASTM A780.

11. ALL IVIS SENSOR LOOPS SHALL HAVE AN EPOXY OVERLAY PER SECTION 515 OF SPECIAL PROVISIONS.

TOLLING - CASH LANE UPGRADES

1. THE CONTRACTOR SHALL REMOVE AND LEGALLY DISPOSE THE FOLLOWING ITEMS:
   A. TREADLE FRAMES
   B. LANE CONTROLLER ENCLOSURE
   C. TRANSFORMER BOXES

2. THE CONTRACTOR SHALL SALVAGE THE FOLLOWING ITEMS AND DELIVER TO THE MAINE TURNPIKE SIGN SHOP AT MILE MARKER 58.3 NB:
   A. ISLAND TRAFFIC SIGNALS AND MOUNTING POLES
   B. LIGHT CURTAINS, HEIGHT DETECTORS AND ENCLOSURES
   C. PATRON FARE DISPLAY
   D. RED/GREEN LANE USE SIGNALS

3. THE CONTRACTOR SHALL SALVAGE THE FOLLOWING ITEMS AND DELIVER TO TRANSCORE'S WAREHOUSE AT TRANSCORE INC., 1190 RIVERSIDE STREET, SUITE 3B PORTLAND, ME:
   A. TREADLE INSERTS
   B. OVERHEAD SCANNER (LANES 2, 3, 4 AND 5)

4. TRANSCORE SHALL PROVIDE THE FOLLOWING ITEMS TO BE INSTALLED BY THE CONTRACTOR:
   A. PELCO MOUNTING HOOK FOR THE DVAS CAMERA
   B. IVIS LOOP SENSORS AND ASSOCIATED TEMPLATES FOR CUTTING CONCRETE
   C. LOCTITE EPOXY AND MACHINE FOR INSTALLATION OF EPOXY FOR LOOPS
   D. 2 COPPER SWITCHES WITH FIBER TRUNK PORTS
   E. VGA AND AUDIO CABLES (PRETERMINATED) IN 25' OR 50' LENGTHS. NOTE: PRETERMINATED ENDS NEED A 2" OPENING IN COUNTER AND 2" CONDUIT.

5. THE CONTRACTOR SHALL PROVIDE AND INSTALL THE FOLLOWING ITEMS:
   A. ALL REQUIRED JUNCTION BOXES, CONDUIT AND ASSOCIATED COMMUNICATION AND ELECTRICAL WIRING
   B. NEW RED "X" /GREEN "ARROW" CANOPY LIGHTS (EXISTING WIRING TO BE REUSED), ON FRONT OF CANOPY.
   C. TRAFFIC CONTROL PEDESTAL (INSTALL ONLY)
   D. LANE CONTROLLER ENCLOSURE AND METAL CLEATS (PROVIDE AND TERMINATE ONLY)

6. ITEMS ASSOCIATED WITH CASH LANES TO REMAIN ARE:
   A. RECEIPT PRINTER (BOOTH)
   B. AVI ANTENNA (CANOPY)
   C. CANOPY OVERRIDE SWITCH (BOOTH)
   D. AVI READER
   E. POWER AND DATA CABLING THAT CAN BE REUSED (TUNNEL, BOOTH, LANE)

7. TRANSCORE SHALL PROVIDE, INSTALL AND TERMINATE THE FOLLOWING ITEMS:
   A. DVAS CAMERA AND COSTAR ENCLOSURE
   B. NEW LANE AND ASSOCIATED CONTROLLERS AND NETWORK SWITCHES
   C. TRAFFIC CONTROL PEDESTAL (PROVIDE TCP AND TERMINATE DATA ONLY)
   D. LANE CONTROLLER ENCLOSURE AND METAL CLEATS (PROVIDE AND TERMINATE ONLY)
   E. MANUAL LANE TERMINAL

8. TRANSCORE SHALL REMOVE AND SALVAGE THE FOLLOWING ITEMS:
   A. MANUAL LANE TERMINAL
   B. VIOLATION ENFORCEMENT AND SYSTEM CONTROLLER AND CABINET
   C. EXISTING LANE CONTROLLER

9. FOR LANES 5 AND 6, THE CONTRACTOR SHALL REPLACE EXISTING RED AND GREEN LANE USE SIGNALS WITH A RED "X" AND A GREEN ARROW.

OPEN ROAD TOLLING (ORT)

1. IF THE FINAL LIFT OF PAVEMENT IS NOT IN PLACE DURING THE TESTING OF THE ORT LANES, THE CONTRACTOR SHALL PROVIDE TEMPORARY RAMPS AT THE TRANSITION FROM THE ASPHALT BASE COURSE TO THE ORT CONCRETE SLABS AND FROM THE ASPHALT BASE COURSE TO THE EXISTING PAVEMENT. THESE SHALL BE 100 FEET IN LENGTH THE ENTIRE WIDTH OF PAVEMENT. TEMPORARY RAMPS SHALL BE CONSTRUCTED USING THE SAME MATERIAL AS BEING PLACED ON THAT DAY OR AS APPROVED BY THE RESIDENT. ALL TEMPORARY RAMPS ARE TO BE CONSTRUCTED ON A SAND JOINT. THE CONTRACTOR SHALL BE RESPONSIBLE FOR ALL REPAIRS AND MAINTENANCE REQUIRED FOR THE TEMPORARY RAMPS. ALL WORK ASSOCIATED WITH THE RAMPS SHALL BE INCIDENTAL TO THE PAVEMENT ITEMS.

2. REMOVE AND DISPOSE OF ALL EXISTING CABLES IN EXISTING DUCTBANK ONCE PROPOSED TOLL SYSTEM IS OPERATIONAL AND ACCEPTED BY THE RESIDENT.

GENERAL

1. PHONE, CABLE AND MTA RADIO SHALL BE KEPT OPERATIONAL AT ALL TIMES. REROUTED LINES SHALL BE PAID UNDER THE APPROPRIATE 655 ITEMS (L.F.) AS AGREED UPON WITH THE RESIDENT.

2. THE CONTRACTOR SHALL RECONSTRUCT WESTBOUND LANE 3 TOLLING EQUIPMENT TO OPERATE AS AN EASTBOUND TOLL LANE DURING PHASE 3. THE RECONSTRUCTION OF THE TOLLING EQUIPMENT LANE 3 SHALL OCCUR DURING PHASE 2, AND THE CONTRACTOR SHALL REMOVE EXISTING TOLL EQUIPMENT AND PREPARE THE LANE FOR INSTALLATION OF THE NEW TOLL SYSTEM. ALL NEEDED TOLL ITEMS WILL BE PAID FOR AT THE UNIT ITEM PRICE, AND THE REMOVAL OF THE EQUIPMENT WILL BE INCIDENTAL TO THE DEMOLITION AND RECONSTRUCTION OF THE ORT SECTION OF THE PLAZA. THE COMPLETION AND COMMISSIONING OF LANE 3 EASTBOUND SHALL OCCUR PRIOR TO THE COMPLETION OF PHASE 2.

EARTHWORK SUMMARY

COMMON EXCAVATION FOR ESTIMATE				
COMMON EXCAVATION (FROM CROSS SECTIONS)		17,684		
GRUBBING IN FILL		464		
PAVEMENT REMOVAL		7,105		
TOTAL COMMON EXCAVATION				25,253
ITEM 203.20 - COMMON EXCAVATION	SAY			25,300
FILL FOR BORROW CALCULATIONS				
COMMON FILL (FROM CROSS SECTIONS)		372		
GRUBBING IN FILL		464		
BACKFILL CATCH BASIN REMOVAL		190		
TOTAL FILL				1,026
ROCK EXCAVATION FOR ESTIMATE				
ROCK EXCAVATION (FROM CROSS SECTIONS)		6,828		
TOTAL ROCK EXCAVATION				6,828
ITEM 203.21 - ROCK EXCAVATION	SAY			6,830
AVAILABLE COMMON EXCAVATION FOR BORROW CALCULATIONS				
(1) TOTAL COMMON EXCAVATION				25,253
DEDUCTIONS:				
GRUBBING IN CUT		3,296		
GRUBBING IN FILL		464		
PAVEMENT REMOVAL		7,105		
(2) TOTAL DEDUCTIONS				10,865
TOTAL AVAILABLE COMMON EXCAVATION (1) MINUS (2)				14,388
TOTAL AVAILABLE STRUCT. EXCAVATIONS (Tunnel)				2,060
TOTAL AVAILABLE STRUCT. EXCAVATIONS (EMH's)				76
TOTAL AVAILABLE NON-ROCK EXCAVATION				16,524
COMPUTATION OF GRANULAR BORROW FOR ESTIMATE				
GRANULAR BORROW FROM CROSS SECTIONS		5,829		
GRANULAR BORROW =		5,829	x 1.15=	6,703
ITEM 203.25 - GRANULAR BORROW	SAY			6,700
COMPUTATION FOR COMMON BORROW FOR ESTIMATE				
(3) TOTAL FILL				1,026
TOTAL AVAIL. NON-ROCK EXCAV.	16,524	x 0.85 =	14,045	
TOTAL AVAIL. ROCK EXCAV.	6,828	x 1.33 =	9,081	
TOTAL AVAIL. STR. ROCK EXCAV. (Tunnel)	160	x 1.33 =	213	
TOTAL AVAIL. STR. ROCK EXCAV. (Drainage and minor structures)	15	x 1.33 =	20	
(4) TOTAL AVAILABLE EXCAVATION			=	23,359
(4) - (3) SURPLUS MATERIAL =				22,333

Date:5/15/2015

Filename: 004_GeneralNotes.dgn

Scale:

No.	Revision	By	Date

Designed by:

HNTB

CONSULTANT PROJECT MANAGER: R. Bruce Munger, P.E.

	By	Date		By	Date
Designed	HME	05/15	Checked	RBM	05/15
Drawn	MPC	05/15	In Charge of	RAL	05/15

HNTB CORPORATION
340 County Road, Suite 6-C
Westbrook, ME 04092
TEL (207) 774-5155
FAX (207) 228-0909

MAINE TURNPIKE

THE GOLD STAR MEMORIAL HIGHWAY

MTA PROJECT MANAGER: William Yates

FALMOUTH SPUR TOLL PLAZA
ORT CONVERSION

GENERAL NOTES 2
AND EARTHWORK SUMMARY

SHEET NUMBER: GN-02

CONTRACT:2015.13

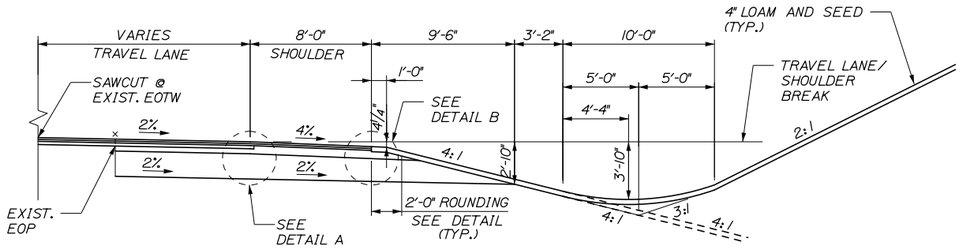

CROSS SLOPE EXTENSION DETAIL

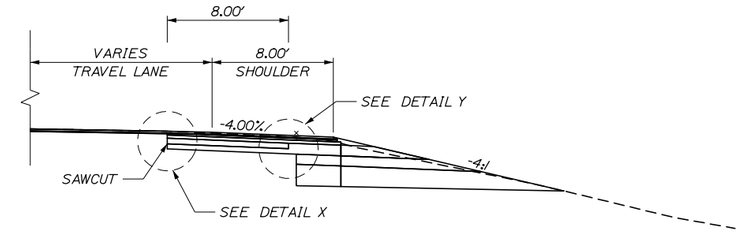

WESTBOUND	EASTBOUND
(STA. 131+00 TO STA. 134+00)	(STA. 130+17.61 TO STA. 134+00)
(STA. 148+50 TO STA. 152+00)	(STA. 148+50 TO STA. 152+00)

2" MILL AND PAVE WITH CROSS SLOPE EXTENSION

STEP 1. SAW CUT, PULL PAVEMENT, AND EXCAVATE SUB GRADE
STEP 2. PLACE GRANULAR AND GRAVELS AND FINE GRADE
STEP 3. PLACE 4½" 19.0MM HMA AT CONSTANT 4% CROSS SLOPE
STEP 4. BACK UP BASE PAVEMENT AND PLACE 2½" LIFT OF 19.0MM HMA AT CONSTANT 4% CROSS SLOPE
STEP 5. PLACE 1½" LIFT OF 12.5MM HMA
STEP 6. MILL TRAVEL LANE, MAINAIN EXISTING CROSS SLOPE
STEP 7. PLACE VARABLE DEPTH SHIM, MATCH CROSS SLOPE IN TRAVEL LANE, 4% CROSS SLOPE IN SHOULDER
STEP 8. PLACE 1½" SURFACE LIFT OF 12.5MM HMA

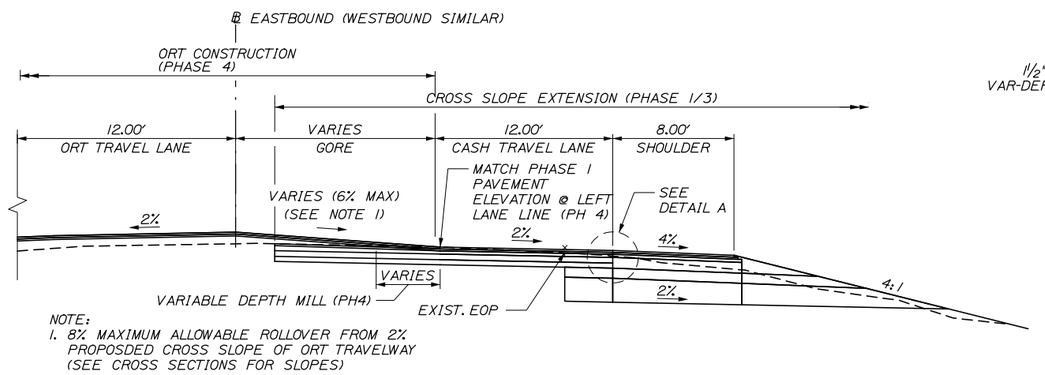

NOTE:
1. 8% MAXIMUM ALLOWABLE ROLLOVER FROM 2% PROPOSDED CROSS SLOPE OF ORT TRAVELWAY (SEE CROSS SECTIONS FOR SLOPES)

GORE AREA DETAIL

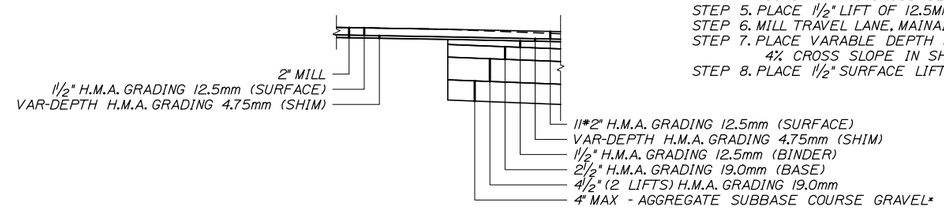

DETAIL X

* AS REQUIRED (SEE CROSS SECTIONS)

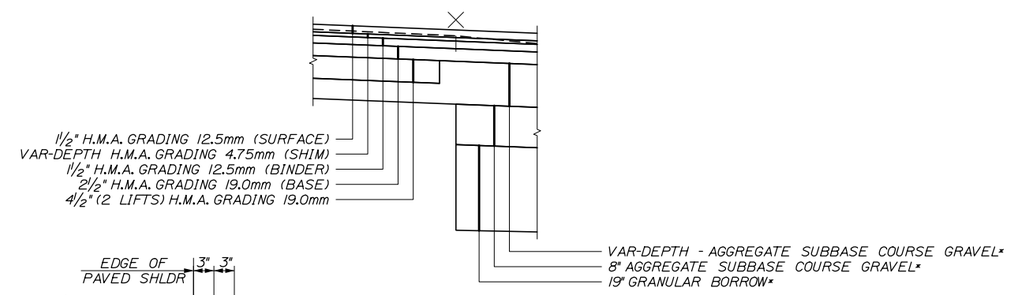

DETAIL Y

*AS REQUIRED (SEE CROSS SECTIONS)

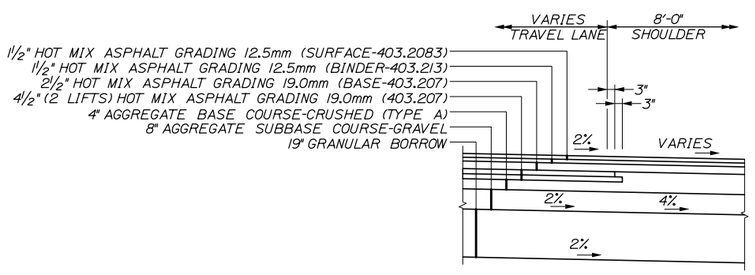

DETAIL A
N.T.S.

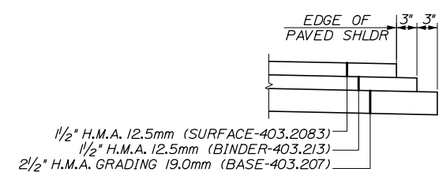

DETAIL B
N.T.S.

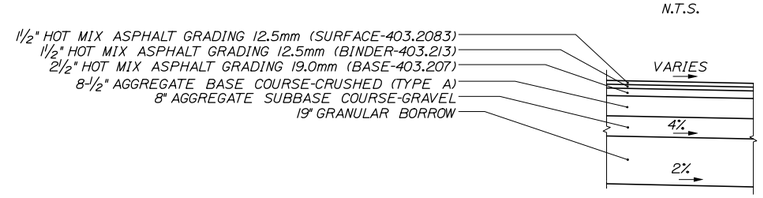

EMPLOYEE PARKING LOT DETAIL
N.T.S.

GENERAL NOTES

1. THE PAVEMENT, BASE AND SUBBASE DEPTHS AS SHOWN ON THE PLANS ARE INTENDED TO BE NOMINAL.
2. CROWNS FOR ALL COURSES OF SUBBASE AND PAVEMENT SHALL BE STRAIGHT.
3. ALL NECESSARY PAVEMENT CUTTING SHALL BE SAWCUT AND DONE IN SUCH A MANNER AS TO LEAVE A CLEAN, VERTICAL FACE.
4. BITUMINOUS TACK COAT IS REQUIRED BETWEEN ALL LIFTS OF PAVEMENT, OR AS DIRECTED BY RESIDENT. BITUMINOUS TACK COAT IS REQUIRED ON ALL EXISTING PAVED OR MILLED SURFACES PRIOR TO PLACING PROPOSED PAVEMENT.
5. A COATING OF HOT RUBBERIZED ASPHALT SHALL BE APPLIED TO SURFACE LAYER OF ALL SAWCUT AND PAVEMENT JOINTS PRIOR TO PAVING. REMAINDER OF SAWCUT TO BE BITUMINOUS TACK COAT. PAYMENT SHALL BE INCIDENTAL TO THE PAVEMENT ITEMS.
6. THE CONTRACTOR WILL NOT BE PERMITTED TO GRIND OUT OR PLACE TEMPORARY PAINTED PAVEMENT MARKINGS ON FINAL SURFACE LIFT OF PAVEMENT. THE SURFACE LIFT SHALL BE PLACED AS THE FINAL CONSTRUCTION PHASE ONCE CONCRETE MEDIAN BARRIER HAS BEEN INSTALLED.
7. SEE GENERAL PLANS FOR THE TYPE AND LIMITS OF BARRIER.

Date:5/15/2015

Filename: 005_Typ1.dgn

Scale: AS NOTED

No.	Revision	By	Date

Designed by: HNTB

CONSULTANT PROJECT MANAGER: R. Bruce Munger, P.E.

	By	Date		By	Date
Designed	HME	05/15	Checked	RBM	05/15
Drawn	PDB	05/15	In Charge of	RAL	05/15

HNTB CORPORATION
340 County Road, Suite 6-C
Westbrook, ME 04092
TEL (207) 774-5155
FAX (207) 228-0909

MAINE TURNPIKE

THE GOLD STAR MEMORIAL HIGHWAY

MTA PROJECT MANAGER: William Yates

FALMOUTH SPUR TOLL PLAZA
ORT CONVERSION

TYPICAL SECTIONS 1

SHEET NUMBER: TYP-01

CONTRACT:2015.13

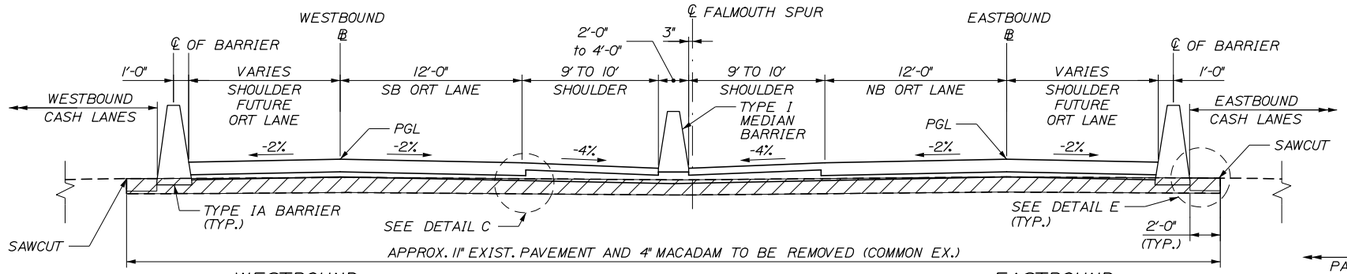

WESTBOUND
(STA. 1137+60 TO STA. 1140+31)
(STA. 1140+96 TO STA. 1141+06)
(STA. 1141+84 TO STA. 1147+00)

EASTBOUND
(STA. 2137+60 TO STA. 2140+55)
(STA. 2141+29 TO STA. 2141+55)
(STA. 2142+20 TO STA. 2147+00)

FULL DEPTH PAVEMENT EXCAVATION
1" = 5'

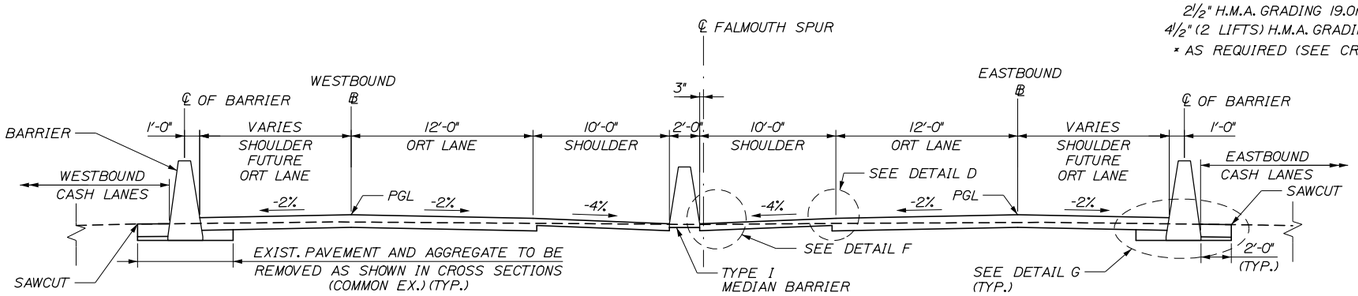

WESTBOUND
(STA. 1134+00 TO STA. 1137+60)
(STA. 1147+00 TO STA. 1148+50)

EASTBOUND
(STA. 2134+00 TO STA. 2137+60)
(STA. 2147+00 TO STA. 2148+50)

VARIABLE DEPTH MILL AND PAVE
1" = 5'

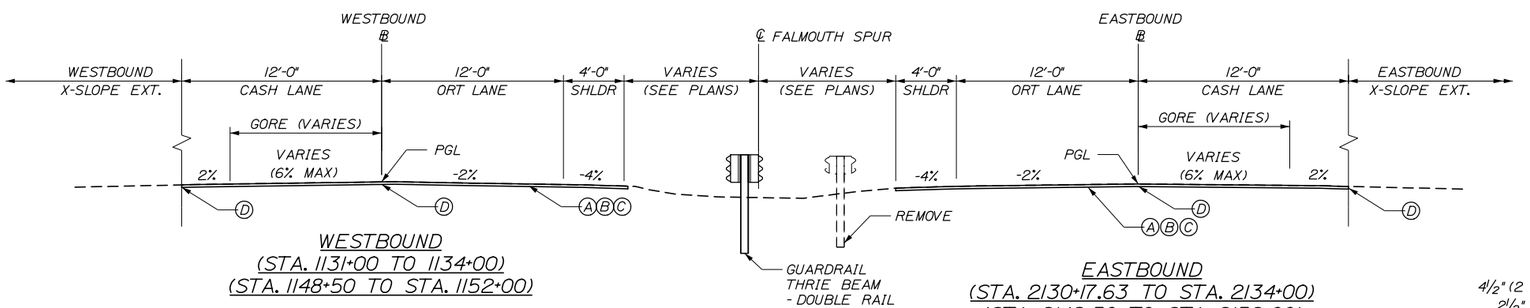

WESTBOUND
(STA. 1131+00 TO 1134+00)
(STA. 1148+50 TO STA. 1152+00)

EASTBOUND
(STA. 2130+17.63 TO STA. 2134+00)
(STA. 2148+50 TO STA. 2152+00)

2" MILL AND PAVE
1" = 5'

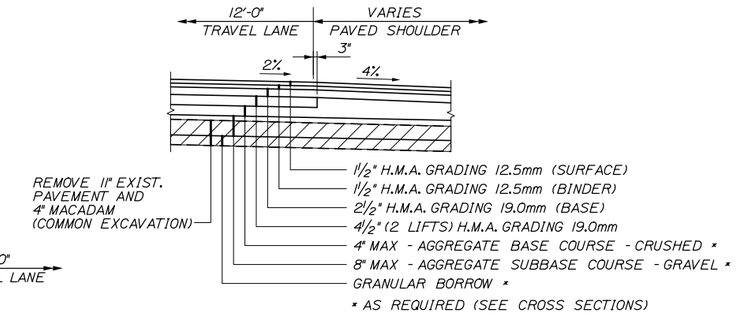

DETAIL C
N.T.S.

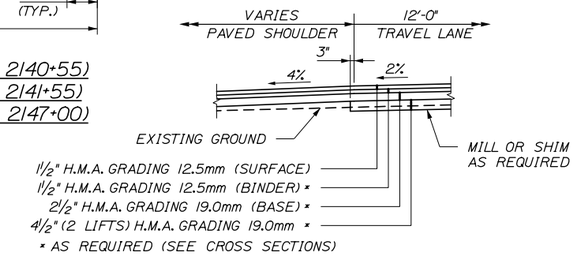

DETAIL D
N.T.S.

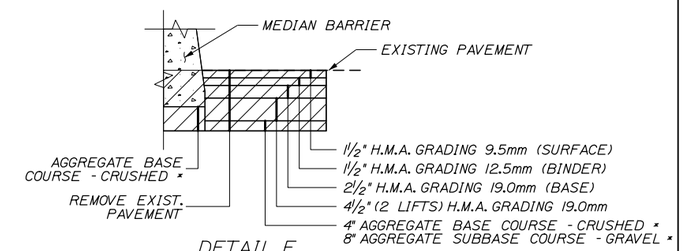

DETAIL E
N.T.S.

NOTE: ALL HMA LIFTS FOR DETAIL E SHALL BE PAID FOR AS ITEM 403.209

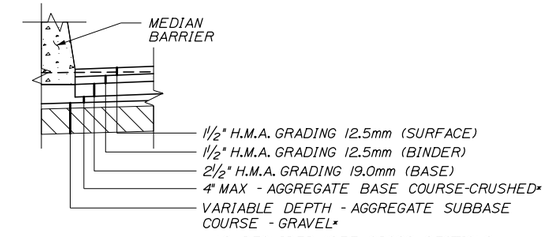

DETAIL F
N.T.S.

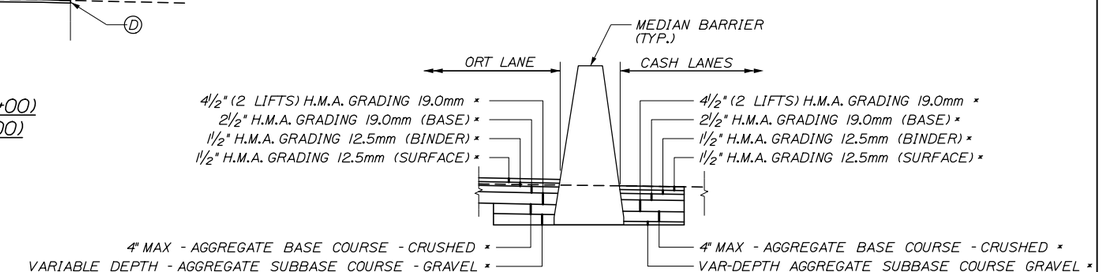

DETAIL G
½" = 1'-0"

* AS REQUIRED (SEE CROSS SECTIONS)

PAVEMENT LEGEND

Ⓐ = 1½ HOT MIX ASPHALT, 12.5MM (POLYMER MODIFIED) ITEM 403.2083

Ⓑ = ½ HOT MIX ASPHALT SHIMMING 4.75 MM ITEM 403.211

Ⓒ = MILLING DEPTH VARIES CONTROLLED BY CROSS SLOPE (2" MAX)

Ⓓ = HOT RUBBERIZED ASPHALT JOINT

NOTES:
1. A COATING OF HOT RUBBERIZED ASPHALT SHALL BE APPLIED TO ALL FINAL LIFT TRANSVERSE BUTT JOINTS AND LONGITUDINAL JOINTS. HOT RUBBER SHALL BE INCIDENTAL TO PAVING ITEMS.
2. BITUMINOUS TACK COAT IS REQUIRED ON ALL EXISTING PAVED AND MILLED SURFACES PRIOR TO PLACING PROPOSED PAVEMENT.
3. CONSTRUCT FULL DEPTH MEDIAN(STA 132+00 TO 134+00 AND 148+50 TO 150+30)

Scale: AS NOTED

No.	Revision	By	Date

Designed by: HNTB

CONSULTANT PROJECT MANAGER: R. Bruce Munger, P.E.

	By	Date		By	Date
Designed	HME	05/15	Checked	RBM	05/15
Drawn	PB	05/15	In Charge of	RAL	05/15

HNTB CORPORATION
340 County Road, Suite 6-C
Westbrook, ME 04092
TEL (207) 774-5155
FAX (207) 228-0909

MAINE TURNPIKE

THE GOLD STAR MEMORIAL HIGHWAY

MTA PROJECT MANAGER: William Yates

FALMOUTH SPUR TOLL PLAZA
ORT CONVERSION

TYPICAL SECTIONS 2

SHEET NUMBER: TYP-02

CONTRACT: 2015.13

Date: 5/15/2015

Filename: 006_Typ2.dgn

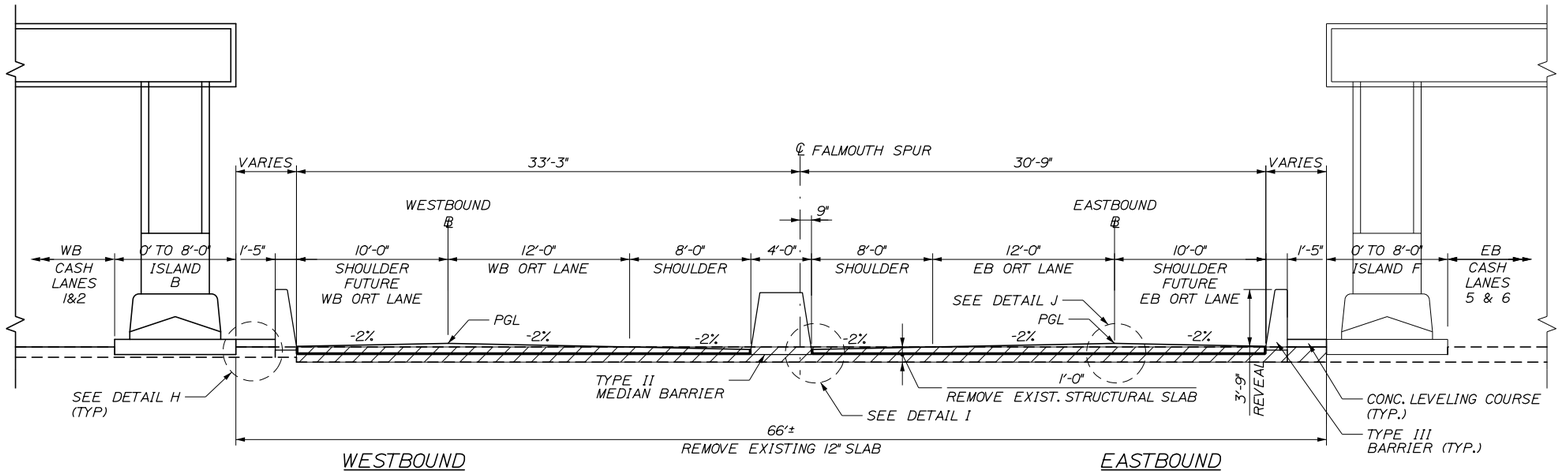

WESTBOUND
(STA. 1140+06 TO STA. 1141+84)

EASTBOUND
(STA. 2140+55 TO STA. 2141+29)

FULL DEPTH PAVEMENT AT PLAZA
1" = 5'

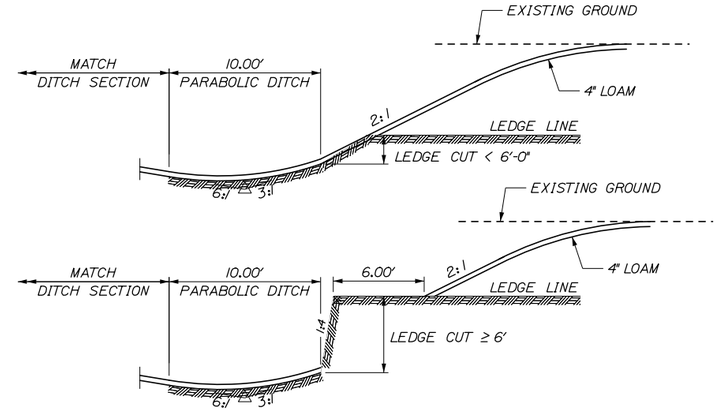

LEDGE ROCK CUT
N.T.S.

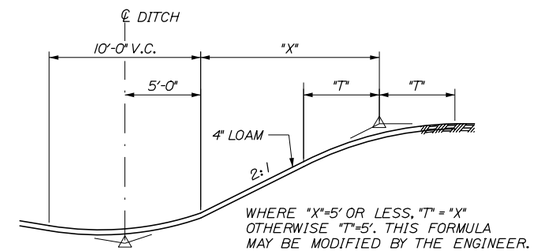

BACKSLOPE ROUNDING DETAIL
N.T.S.

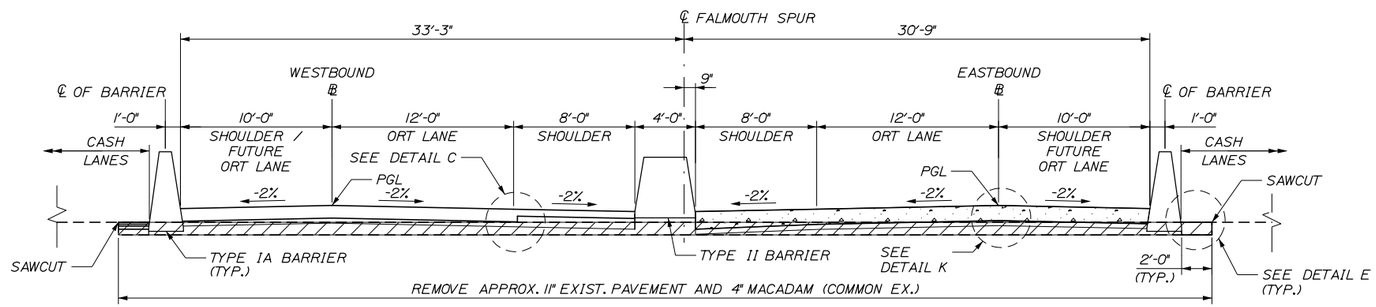

EASTBOUND ORT SLAB
(STA. 2141+55 TO STA. 2142+20)

WESTBOUND (MIRRORED)
(STA. 1140+31 TO STA. 1140+96)
1" = 5'

NOTE: SEE STRUCTURAL PLANS FOR ORT SLAB DETAILS.

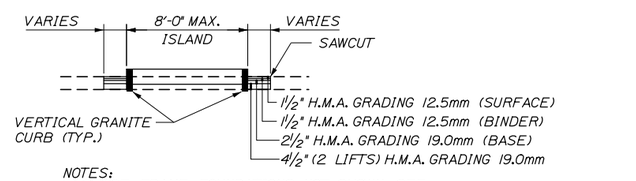

NOTES:
1. SPACE FRAME FOUNDATIONS NOT SHOWN. SEE STRUCTURAL PLANS FOR FOUNDATION AND ISLAND DETAILS.
2. SEE GENERAL PLAN FOR LIMITS OF SAWCUT.
3. ALL HMA LIFTS FOR THE EXTENDED ISLAND SHALL BE PAID FOR AS ITEM 403.209

EXTENDED ISLAND

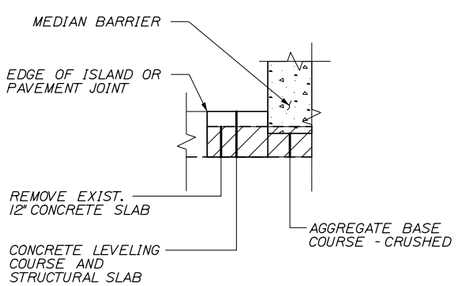

NOTE: TOP OF CONCRETE LEVELING COURSE SHALL MATCH TOP OF ISLAND. SEE STRUCTURAL SHEETS AND BARRIER DETAILS FOR ISLAND AND CONCRETE SLAB DETAILS

DETAIL H

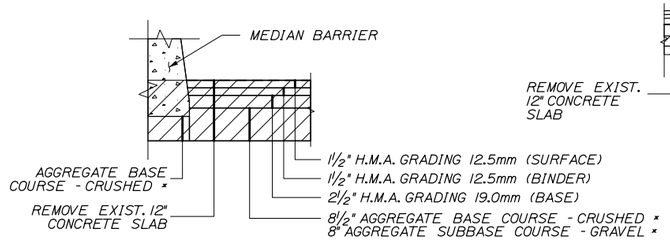

DETAIL I

* AS REQUIRED (SEE CROSS SECTIONS)

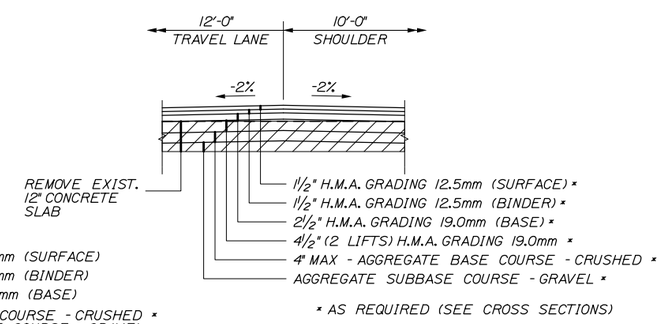

* AS REQUIRED (SEE CROSS SECTIONS)

DETAIL J

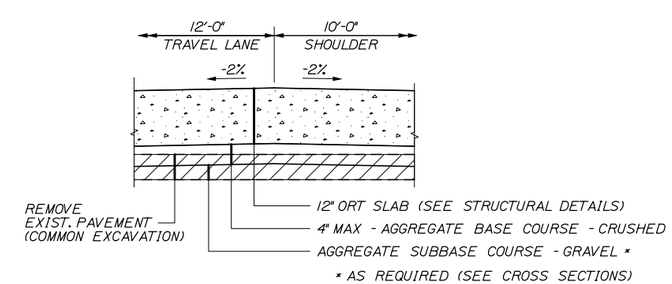

* AS REQUIRED (SEE CROSS SECTIONS)

DETAIL K

Date:5/15/2015

Filename: 007_Typ3.dgn

Scale: AS NOTED			
No.	Revision	By	Date

Designed by: HNTB

CONSULTANT PROJECT MANAGER: R. Bruce Munger, P.E.

	By	Date		By	Date
Designed	HME	05/15	Checked	RBM	05/15
Drawn	PB	05/15	In Charge of	RAL	05/15

HNTB CORPORATION
340 County Road, Suite 6-C
Westbrook, ME 04092
TEL (207) 774-5155
FAX (207) 228-0909

MAINE TURNPIKE

THE GOLD STAR MEMORIAL HIGHWAY

MTA PROJECT MANAGER: William Yates

FALMOUTH SPUR TOLL PLAZA
ORT CONVERSION

TYPICAL SECTIONS 3

SHEET NUMBER: TYP-03

CONTRACT:2015.13

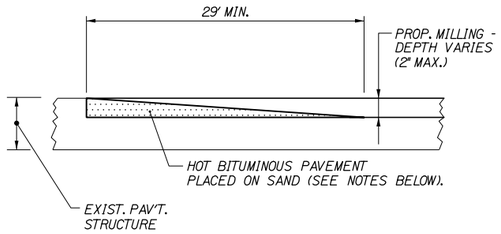

TEMPORARY BITUMINOUS RAMP

NOTES:

1. HOT MIX ASPHALT FOR TEMPORARY RAMPS SHALL BE MEASURED FOR PAYMENT UNDER ITEM 403.213.

2. REMOVAL OF TEMP. RAMP(S) WILL NOT BE MEASURED SEPARATELY FOR PAYMENT, BUT SHALL BE INCIDENTAL TO ITEM 403.213.

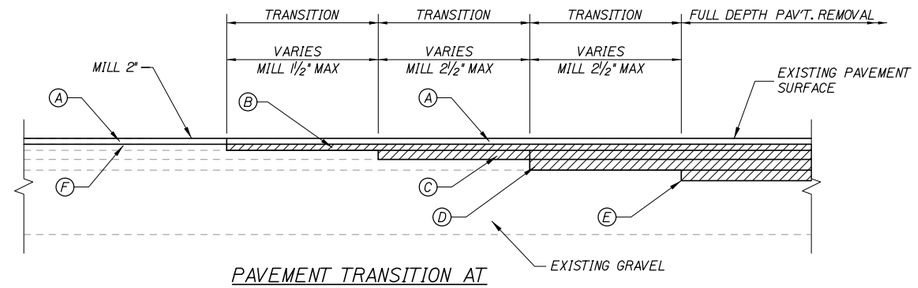

PAVEMENT TRANSITION AT FULL DEPTH PAVEMENT REMOVAL

NOT TO SCALE

LEGEND

(A) — 1½" HOT MIX ASPHALT GRADING 12.5mm (POLYMER MODIFIED) ITEM 403.2083
(B) — 1½" HOT MIX ASPHALT GRADING 12.5mm ITEM 403.213
(C) — 2½" HOT MIX ASPHALT GRADING 19.0mm ITEM 403.207
(D) & (E) — 4½" (2 LIFTS) HOT MIX ASPHALT GRADING 19.0mm ITEM 403.207
(F) — ½" HOT MIX ASPHALT SHIMMING, 4.75mm ITEM 403.211

NOTES:

1. FULL DEPTH PAVEMENT REMOVAL SHALL BE PAID FOR AS COMMON EXCAVATION. EXISTING PAVEMENT THICKNESS HAS BEEN ESTIMATED TO BE A MINIMUM OF 10".

2. BITUMINOUS TACK COAT IS REQUIRED BETWEEN ALL LIFTS OF PAVEMENT, OR AS DIRECTED BY RESIDENT. BITUMINOUS TACK COAT IS REQUIRED ON ALL EXISTING PAVED OR MILLED SURFACES PRIOR TO PLACING PROPOSED PAVEMENT.

3. A COATING OF HOT RUBBERIZED ASPHALT SHALL BE APPLIED TO SURFACE LAYER OF ALL SAWCUT AND PAVEMENT JOINTS PRIOR TO PAVING. REMAINDER OF SAWCUT TO BE BITUMINOUS TACK COAT. PAYMENT SHALL BE INCIDENTAL TO THE PAVEMENT ITEMS.

4. SHOULDER PAVEMENT TRANSITIONS SHALL ALIGN WITH MAINLINE TRANSITIONS.

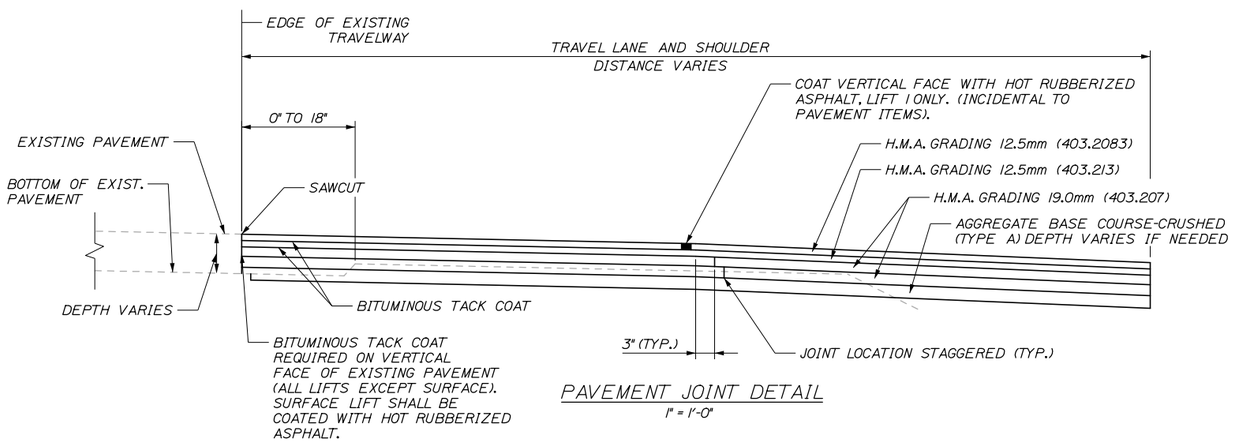

PAVEMENT JOINT DETAIL

1" = 1'-0"

Date:5/15/2015

Filename: 008_PavementDets.dgn

Scale: AS NOTED			
No.	Revision	By	Date

Designed by: HNTB

CONSULTANT PROJECT MANAGER: R. Bruce Munger, P.E.

	By	Date		By	Date
Designed	HME	05/15	Checked	RBM	05/15
Drawn	MPC	05/15	In Charge of	RAL	05/15

HNTB CORPORATION
340 County Road, Suite 6-C
Westbrook, ME 04092
TEL (207) 774-5155
FAX (207) 228-0909

MAINE TURNPIKE

THE GOLD STAR MEMORIAL HIGHWAY

MTA PROJECT MANAGER: William Yates

FALMOUTH SPUR TOLL PLAZA
ORT CONVERSION

TYPICAL SECTIONS AND PAVEMENT DETAILS

SHEET NUMBER: TYP-04

CONTRACT:2015.13

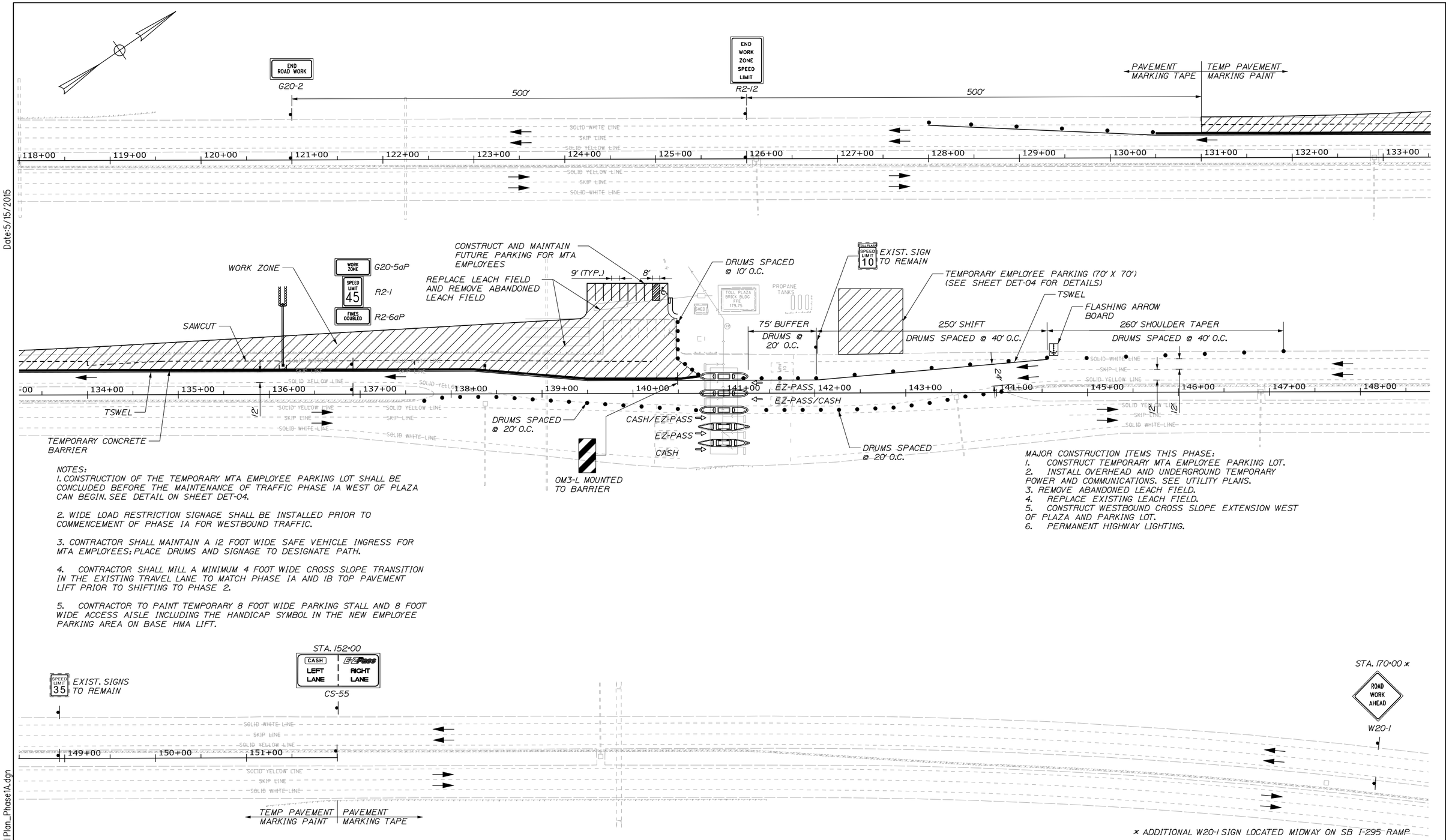

NOTES:

1. CONSTRUCTION OF THE TEMPORARY MTA EMPLOYEE PARKING LOT SHALL BE CONCLUDED BEFORE THE MAINTENANCE OF TRAFFIC PHASE IA WEST OF PLAZA CAN BEGIN. SEE DETAIL ON SHEET DET-04.

2. WIDE LOAD RESTRICTION SIGNAGE SHALL BE INSTALLED PRIOR TO COMMENCEMENT OF PHASE IA FOR WESTBOUND TRAFFIC.

3. CONTRACTOR SHALL MAINTAIN A 12 FOOT WIDE SAFE VEHICLE INGRESS FOR MTA EMPLOYEES; PLACE DRUMS AND SIGNAGE TO DESIGNATE PATH.

4. CONTRACTOR SHALL MILL A MINIMUM 4 FOOT WIDE CROSS SLOPE TRANSITION IN THE EXISTING TRAVEL LANE TO MATCH PHASE IA AND IB TOP PAVEMENT LIFT PRIOR TO SHIFTING TO PHASE 2.

5. CONTRACTOR TO PAINT TEMPORARY 8 FOOT WIDE PARKING STALL AND 8 FOOT WIDE ACCESS AISLE INCLUDING THE HANDICAP SYMBOL IN THE NEW EMPLOYEE PARKING AREA ON BASE HMA LIFT.

MAJOR CONSTRUCTION ITEMS THIS PHASE:

1. CONSTRUCT TEMPORARY MTA EMPLOYEE PARKING LOT.
2. INSTALL OVERHEAD AND UNDERGROUND TEMPORARY POWER AND COMMUNICATIONS. SEE UTILITY PLANS.
3. REMOVE ABANDONED LEACH FIELD.
4. REPLACE EXISTING LEACH FIELD.
5. CONSTRUCT WESTBOUND CROSS SLOPE EXTENSION WEST OF PLAZA AND PARKING LOT.
6. PERMANENT HIGHWAY LIGHTING.

* ADDITIONAL W20-1 SIGN LOCATED MIDWAY ON SB I-295 RAMP

Scale: 50 0 50 100
1" = 50'

No.	Revision	By	Date

Designed by: HNTB

CONSULTANT PROJECT MANAGER: R. Bruce Munger, P.E.

	By	Date		By	Date
Designed	WA	05/15	Checked	TMH	05/15
Drawn	WA	05/15	In Charge of	RAL	05/15

HNTB CORPORATION
340 County Road, Suite 6-C
Westbrook, ME 04092
TEL (207) 774-5155
FAX (207) 228-0909

MAINE TURNPIKE

THE GOLD STAR MEMORIAL HIGHWAY

MTA PROJECT MANAGER: William Yates

FALMOUTH SPUR TOLL PLAZA
ORT CONVERSION

MAINTENANCE OF TRAFFIC PHASE 1A

SHEET NUMBER: TC-01

CONTRACT: 2015.13

Date: 5/15/2015

Filename: 009_Traffic Control Plan_Phase1A.dgn

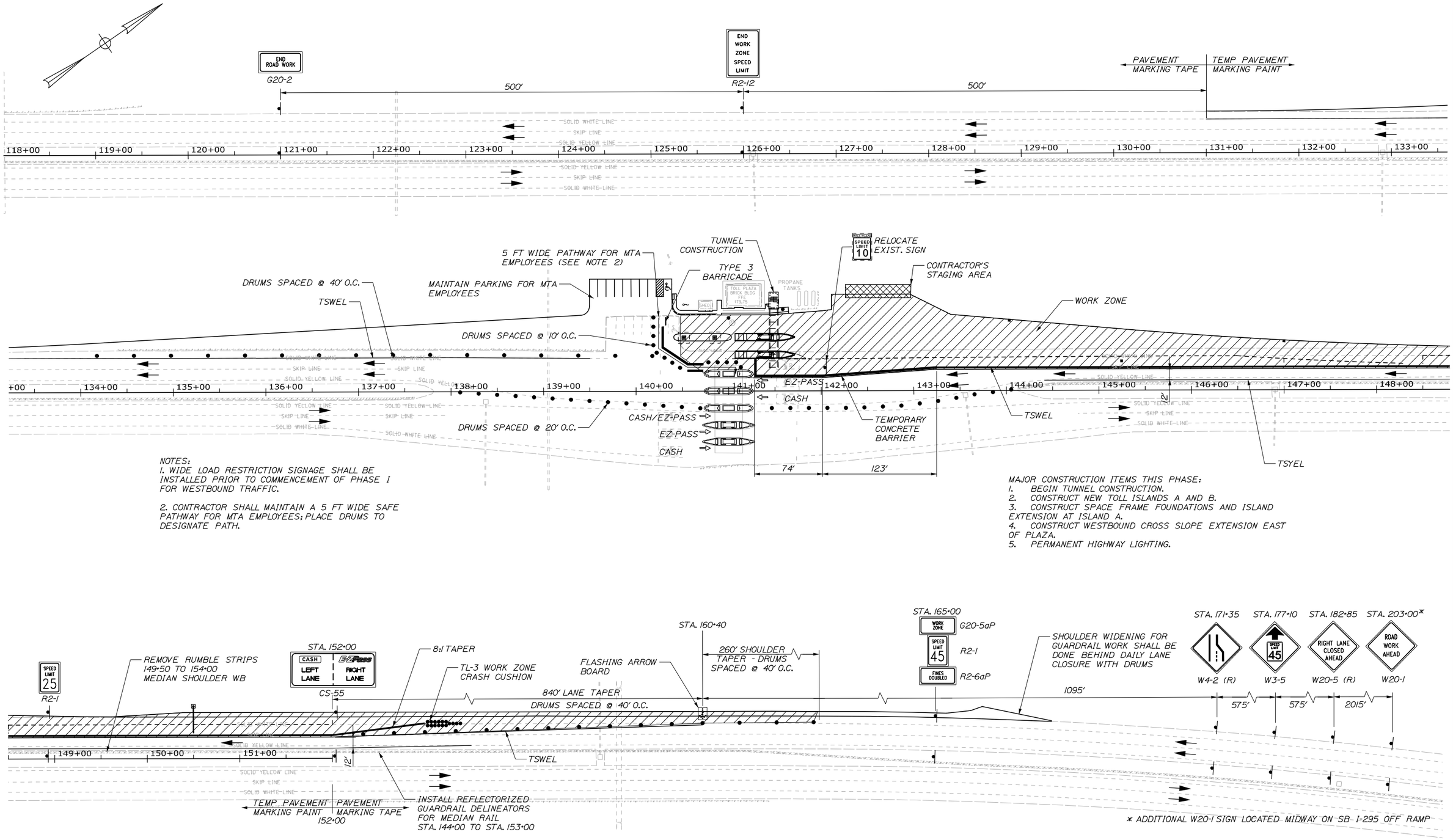

NOTES:

1. WIDE LOAD RESTRICTION SIGNAGE SHALL BE INSTALLED PRIOR TO COMMENCEMENT OF PHASE I FOR WESTBOUND TRAFFIC.

2. CONTRACTOR SHALL MAINTAIN A 5 FT WIDE SAFE PATHWAY FOR MTA EMPLOYEES; PLACE DRUMS TO DESIGNATE PATH.

MAJOR CONSTRUCTION ITEMS THIS PHASE:

1. BEGIN TUNNEL CONSTRUCTION.
2. CONSTRUCT NEW TOLL ISLANDS A AND B.
3. CONSTRUCT SPACE FRAME FOUNDATIONS AND ISLAND EXTENSION AT ISLAND A.
4. CONSTRUCT WESTBOUND CROSS SLOPE EXTENSION EAST OF PLAZA.
5. PERMANENT HIGHWAY LIGHTING.

Scale: 50 0 50 100
1" = 50'

No.	Revision	By	Date

Designed by: HNTB

CONSULTANT PROJECT MANAGER: R. Bruce Munger, P.E.

	By	Date		By	Date
Designed	WA	05/15	Checked	TMH	05/15
Drawn	WA	05/15	In Charge of	RAL	05/15

HNTB CORPORATION
340 County Road, Suite 6-C
Westbrook, ME 04092
TEL (207) 774-5155
FAX (207) 228-0909

MAINE TURNPIKE

THE GOLD STAR MEMORIAL HIGHWAY

MTA PROJECT MANAGER: William Yates

FALMOUTH SPUR TOLL PLAZA ORT CONVERSION

MAINTENANCE OF TRAFFIC PHASE 1B

SHEET NUMBER: TC-02

CONTRACT: 2015.13

Date: 5/15/2015

Filename: 010_Traffic ControlPlan_Phase1B.dgn

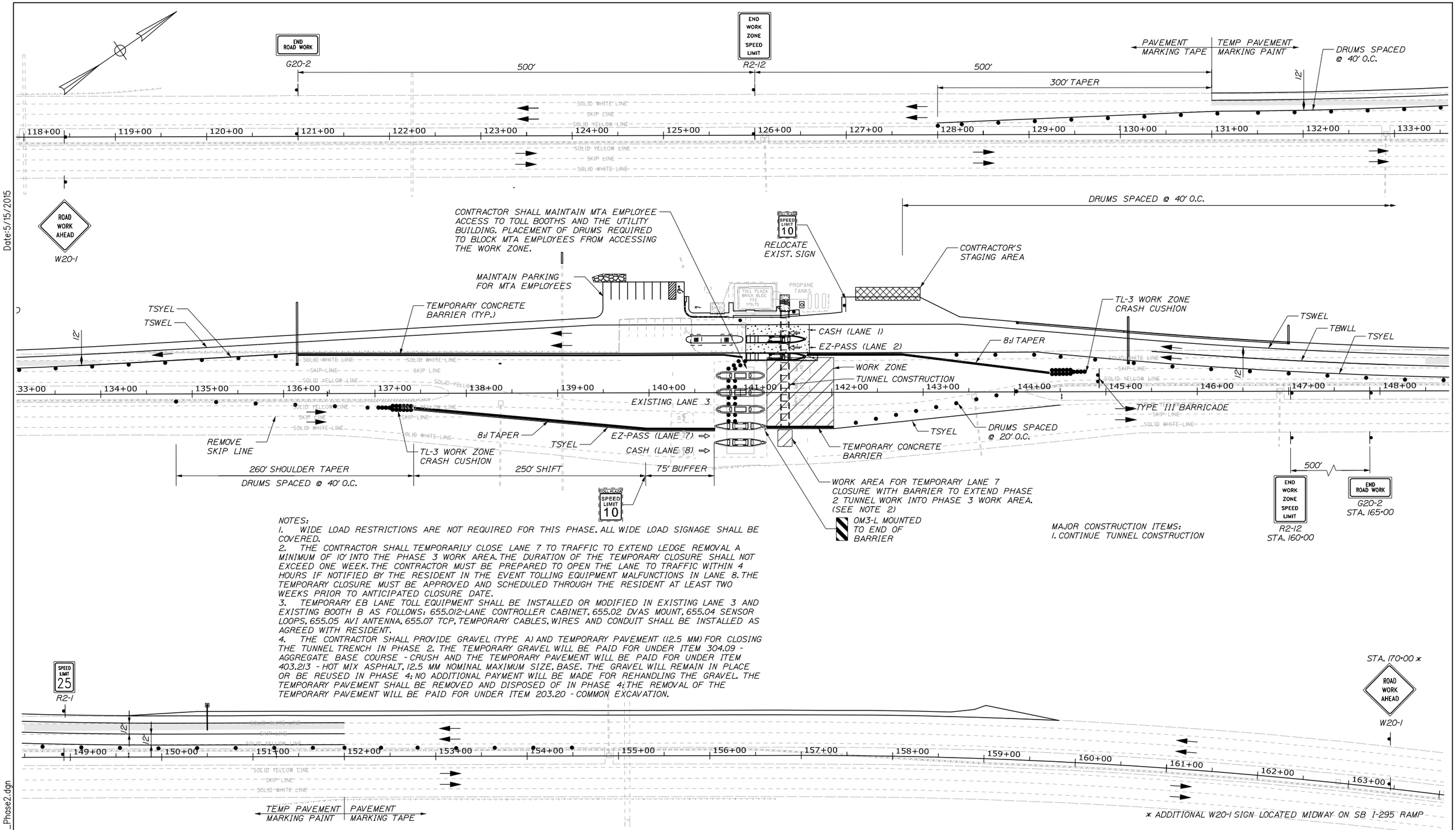

NOTES:

1. WIDE LOAD RESTRICTIONS ARE NOT REQUIRED FOR THIS PHASE. ALL WIDE LOAD SIGNAGE SHALL BE COVERED.
2. THE CONTRACTOR SHALL TEMPORARILY CLOSE LANE 7 TO TRAFFIC TO EXTEND LEDGE REMOVAL A MINIMUM OF 10' INTO THE PHASE 3 WORK AREA. THE DURATION OF THE TEMPORARY CLOSURE SHALL NOT EXCEED ONE WEEK. THE CONTRACTOR MUST BE PREPARED TO OPEN THE LANE TO TRAFFIC WITHIN 4 HOURS IF NOTIFIED BY THE RESIDENT IN THE EVENT TOLLING EQUIPMENT MALFUNCTIONS IN LANE 8. THE TEMPORARY CLOSURE MUST BE APPROVED AND SCHEDULED THROUGH THE RESIDENT AT LEAST TWO WEEKS PRIOR TO ANTICIPATED CLOSURE DATE.
3. TEMPORARY EB LANE TOLL EQUIPMENT SHALL BE INSTALLED OR MODIFIED IN EXISTING LANE 3 AND EXISTING BOOTH B AS FOLLOWS: 655.012-LANE CONTROLLER CABINET, 655.02 DVAS MOUNT, 655.04 SENSOR LOOPS, 655.05 AVI ANTENNA, 655.07 TCP, TEMPORARY CABLES, WIRES AND CONDUIT SHALL BE INSTALLED AS AGREED WITH RESIDENT.
4. THE CONTRACTOR SHALL PROVIDE GRAVEL (TYPE A) AND TEMPORARY PAVEMENT (12.5 MM) FOR CLOSING THE TUNNEL TRENCH IN PHASE 2. THE TEMPORARY GRAVEL WILL BE PAID FOR UNDER ITEM 304.09 - AGGREGATE BASE COURSE - CRUSH AND THE TEMPORARY PAVEMENT WILL BE PAID FOR UNDER ITEM 403.213 - HOT MIX ASPHALT, 12.5 MM NOMINAL MAXIMUM SIZE, BASE. THE GRAVEL WILL REMAIN IN PLACE OR BE REUSED IN PHASE 4; NO ADDITIONAL PAYMENT WILL BE MADE FOR REHANDLING THE GRAVEL. THE TEMPORARY PAVEMENT SHALL BE REMOVED AND DISPOSED OF IN PHASE 4; THE REMOVAL OF THE TEMPORARY PAVEMENT WILL BE PAID FOR UNDER ITEM 203.20 - COMMON EXCAVATION.

MAJOR CONSTRUCTION ITEMS:

1. CONTINUE TUNNEL CONSTRUCTION

Date:5/15/2015

Filename: 011_Traffic Control Plan_Phase2.dgn

Scale: 50 0 50 100
1" = 50'

No.	Revision	By	Date

Designed by: HNTB

CONSULTANT PROJECT MANAGER: R. Bruce Munger, P.E.

	By	Date		By	Date
Designed	WA	05/15	Checked	TMH	05/15
Drawn	WA	05/15	In Charge of	RAL	05/15

HNTB CORPORATION
340 County Road, Suite 6-C
Westbrook, ME 04092
TEL (207) 774-5155
FAX (207) 228-0909

MAINE TURNPIKE

THE GOLD STAR MEMORIAL HIGHWAY

MTA PROJECT MANAGER: William Yates

FALMOUTH SPUR TOLL PLAZA ORT CONVERSION

MAINTENANCE OF TRAFFIC PHASE 2

SHEET NUMBER: TC-03

CONTRACT:2015.13

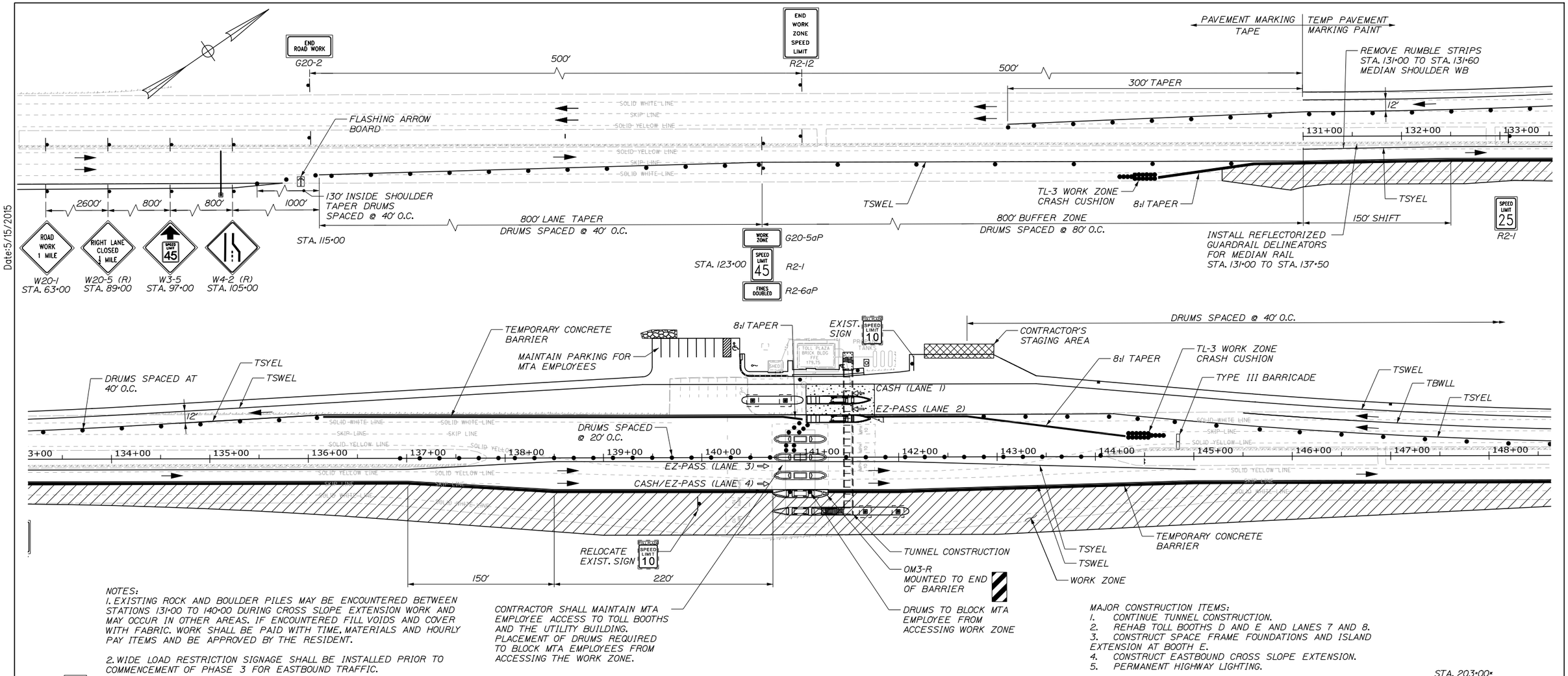

NOTES:
1. EXISTING ROCK AND BOULDER PILES MAY BE ENCOUNTERED BETWEEN STATIONS 131+00 TO 140+00 DURING CROSS SLOPE EXTENSION WORK AND MAY OCCUR IN OTHER AREAS. IF ENCOUNTERED FILL VOIDS AND COVER WITH FABRIC. WORK SHALL BE PAID WITH TIME, MATERIALS AND HOURLY PAY ITEMS AND BE APPROVED BY THE RESIDENT.

2. WIDE LOAD RESTRICTION SIGNAGE SHALL BE INSTALLED PRIOR TO COMMENCEMENT OF PHASE 3 FOR EASTBOUND TRAFFIC.

CONTRACTOR SHALL MAINTAIN MTA EMPLOYEE ACCESS TO TOLL BOOTHS AND THE UTILITY BUILDING. PLACEMENT OF DRUMS REQUIRED TO BLOCK MTA EMPLOYEES FROM ACCESSING THE WORK ZONE.

MAJOR CONSTRUCTION ITEMS:
1. CONTINUE TUNNEL CONSTRUCTION.
2. REHAB TOLL BOOTHS D AND E AND LANES 7 AND 8.
3. CONSTRUCT SPACE FRAME FOUNDATIONS AND ISLAND EXTENSION AT BOOTH E.
4. CONSTRUCT EASTBOUND CROSS SLOPE EXTENSION.
5. PERMANENT HIGHWAY LIGHTING.

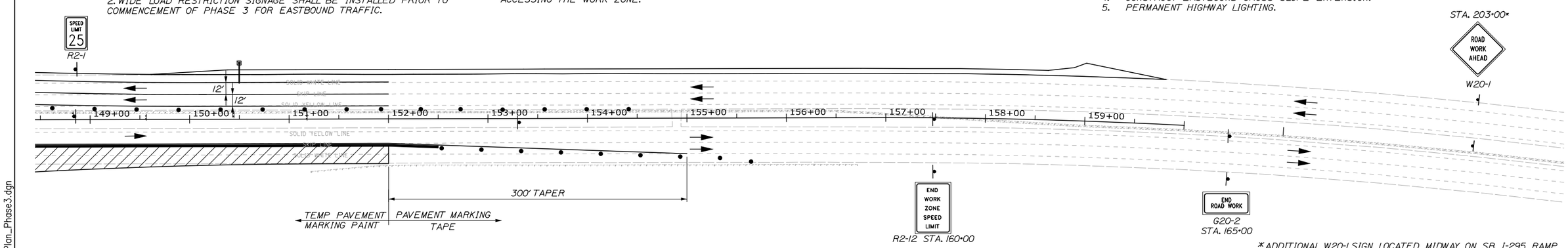

* ADDITIONAL W20-1 SIGN LOCATED MIDWAY ON SB I-295 RAMP

Date:5/15/2015

Filename: 012_Traffic ControlPlan_Phase3.dgn

Scale: 50 0 50 100
1" = 50′

No.	Revision	By	Date

Designed by: HNTB

CONSULTANT PROJECT MANAGER: R. Bruce Munger, P.E.

	By	Date		By	Date
Designed	WA	05/15	Checked	TMH	05/15
Drawn	WA	05/15	In Charge of	RAL	05/15

HNTB CORPORATION
340 County Road, Suite 6-C
Westbrook, ME 04092
TEL (207) 774-5155
FAX (207) 228-0909

MAINE TURNPIKE

THE GOLD STAR MEMORIAL HIGHWAY

MTA PROJECT MANAGER: William Yates

FALMOUTH SPUR TOLL PLAZA ORT CONVERSION

MAINTENANCE OF TRAFFIC PHASE 3

SHEET NUMBER: TC-04

CONTRACT:2015.13

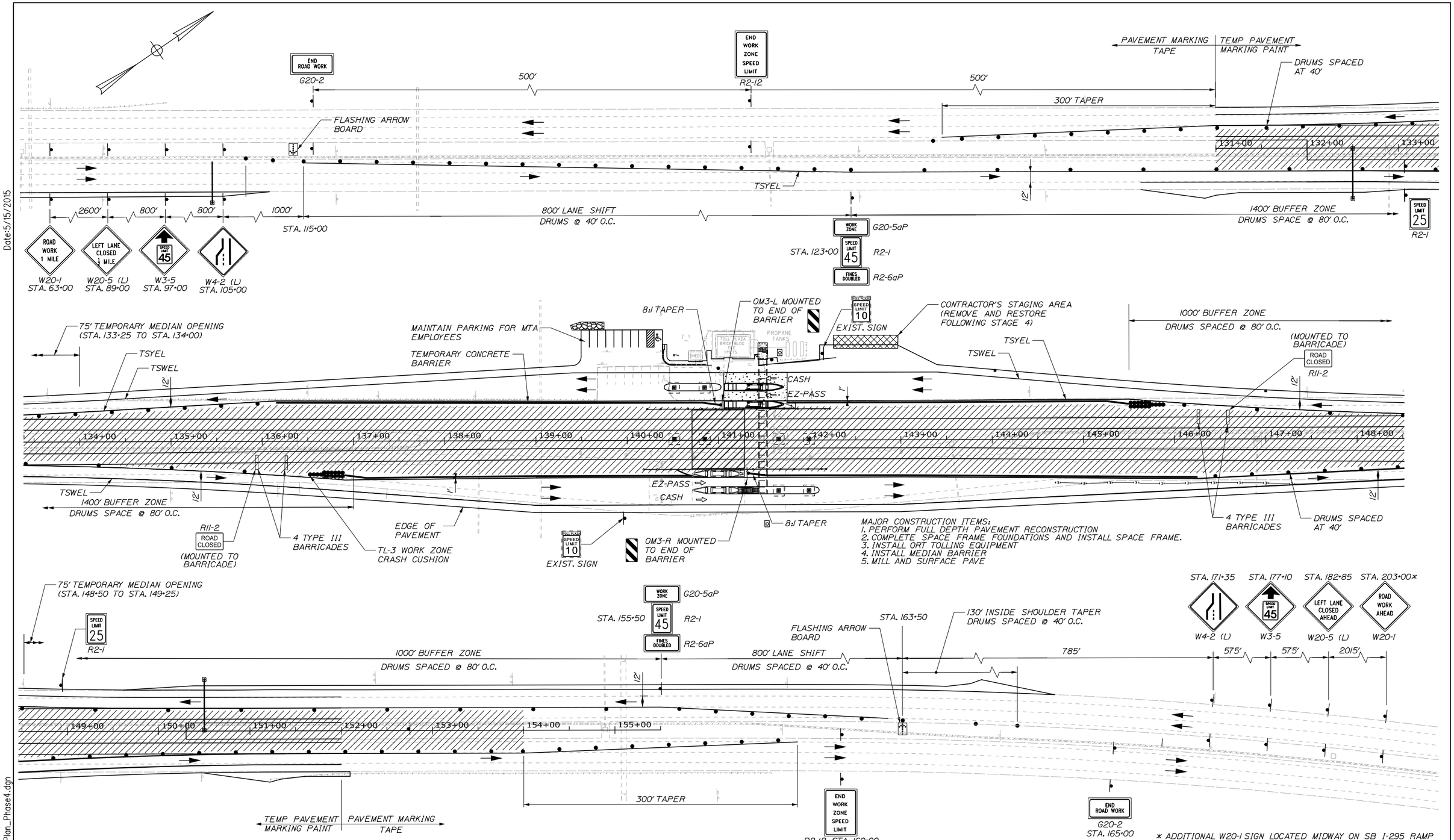

Date:5/15/2015

Filename: 013_Traffic Control Plan_Phase4.dgn

Scale: 50 0 50 100
1" = 50'

No.	Revision	By	Date

Designed by:

HNTB

CONSULTANT PROJECT MANAGER: R. Bruce Munger, P.E.

	By	Date		By	Date
Designed	WA	05/15	Checked	TMH	05/15
Drawn	WA	05/15	In Charge of	RAL	05/15

HNTB CORPORATION
340 County Road, Suite 6-C
Westbrook, ME 04092
TEL (207) 774-5155
FAX (207) 228-0909

MAINE TURNPIKE

THE GOLD STAR MEMORIAL HIGHWAY

MTA PROJECT MANAGER: William Yates

FALMOUTH SPUR TOLL PLAZA
ORT CONVERSION

MAINTENANCE OF TRAFFIC PHASE 4

SHEET NUMBER: TC-05

CONTRACT:2015.13

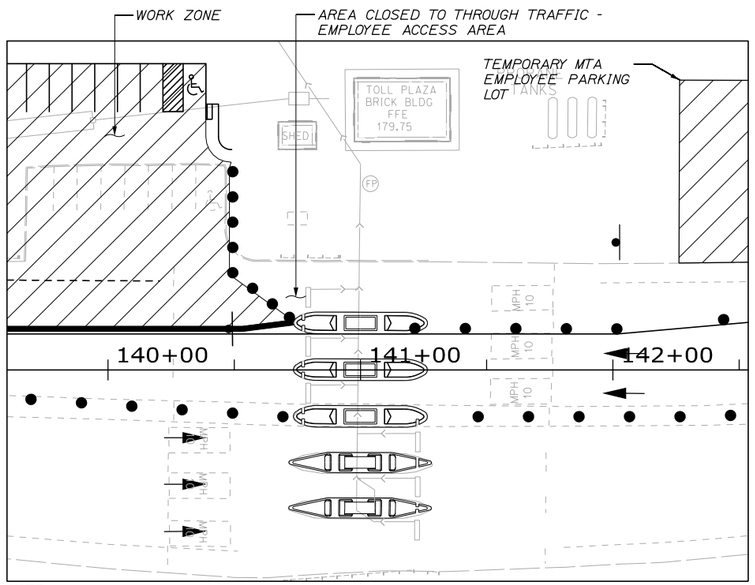

NOTE:
MTA EMPLOYEES ARE TO PARK IN THE TEMPORARY EMPLOYEE PARKING LOT TO THE EAST OF THE OFFICE BUILDING DURING PHASE IA ONLY.

PHASE IA EMPLOYEE ACCESS

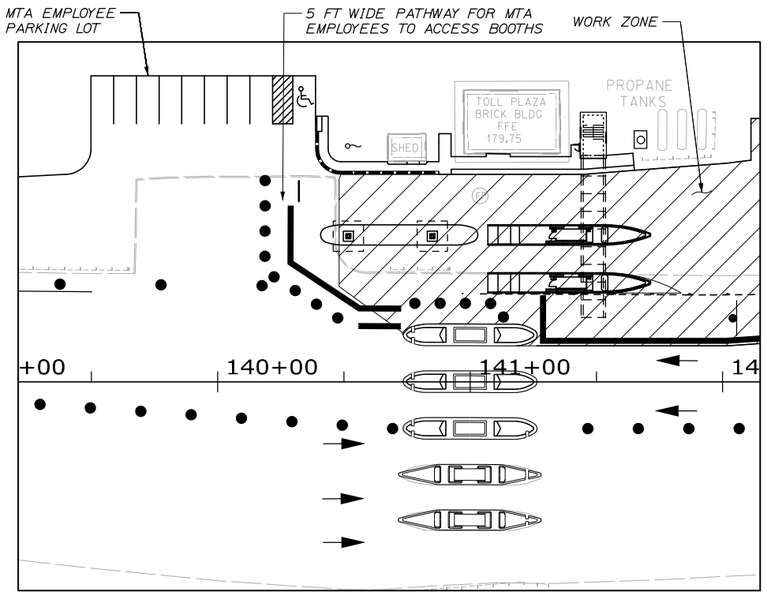

PHASE IB EMPLOYEE ACCESS

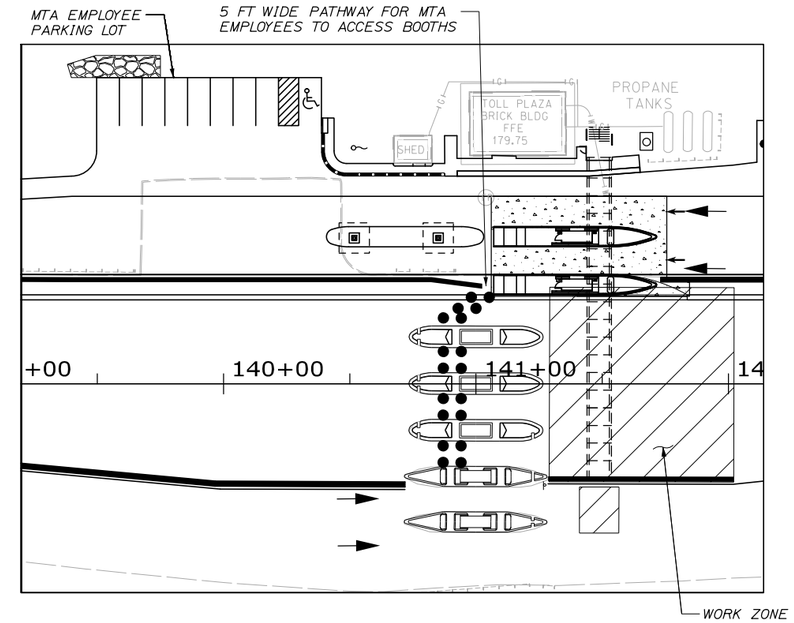

PHASE 2 EMPLOYEE ACCESS

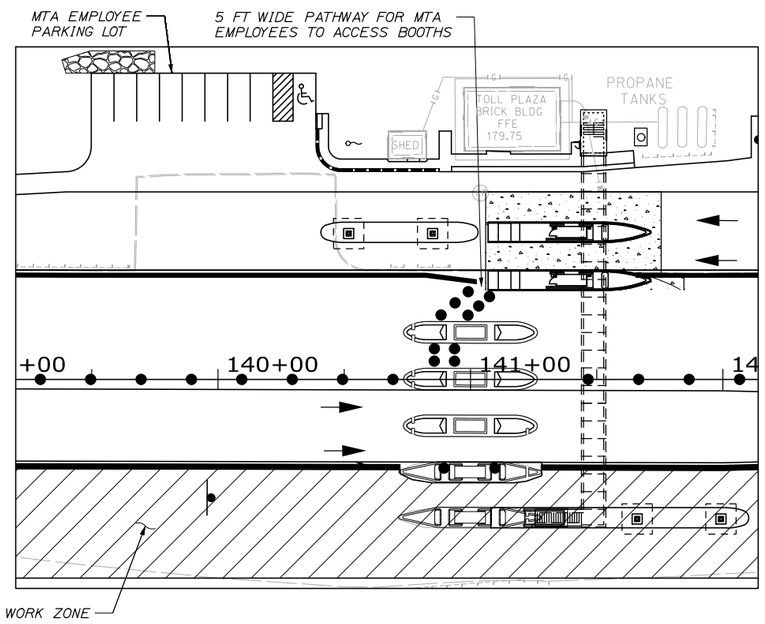

PHASE 3 EMPLOYEE ACCESS

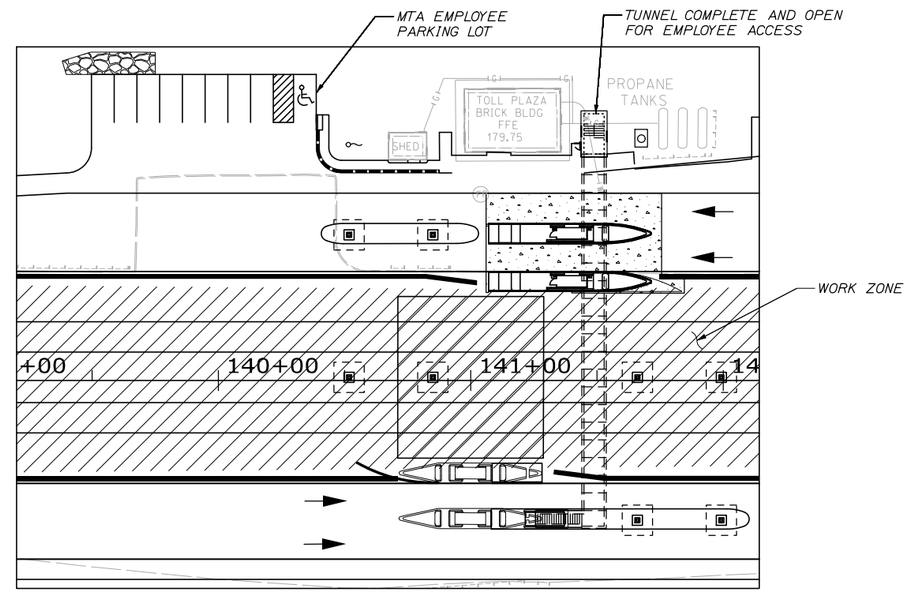

PHASE 4 EMPLOYEE ACCESS

Scale: 30 0 30 60
SCALE IN FEET

No.	Revision	By	Date

Designed by:

HNTB

CONSULTANT PROJECT MANAGER: R. Bruce Munger, P.E.

	By	Date		By	Date
Designed	HME	05/15	Checked	TMH	05/15
Drawn	MPC	05/15	In Charge of	RAL	05/15

HNTB CORPORATION
340 County Road, Suite 6-C
Westbrook, ME 04092
TEL (207) 774-5155
FAX (207) 228-0909

MAINE TURNPIKE

THE GOLD STAR MEMORIAL HIGHWAY

MTA PROJECT MANAGER: William Yates

FALMOUTH SPUR TOLL PLAZA
ORT CONVERSION
MAINTENANCE OF TRAFFIC FOR EMPLOYEE ACCESS

SHEET NUMBER: TC-06

CONTRACT:2015.13

Date:5/15/2015

Filename: 014_TCPlan_EmpAccess.dgn

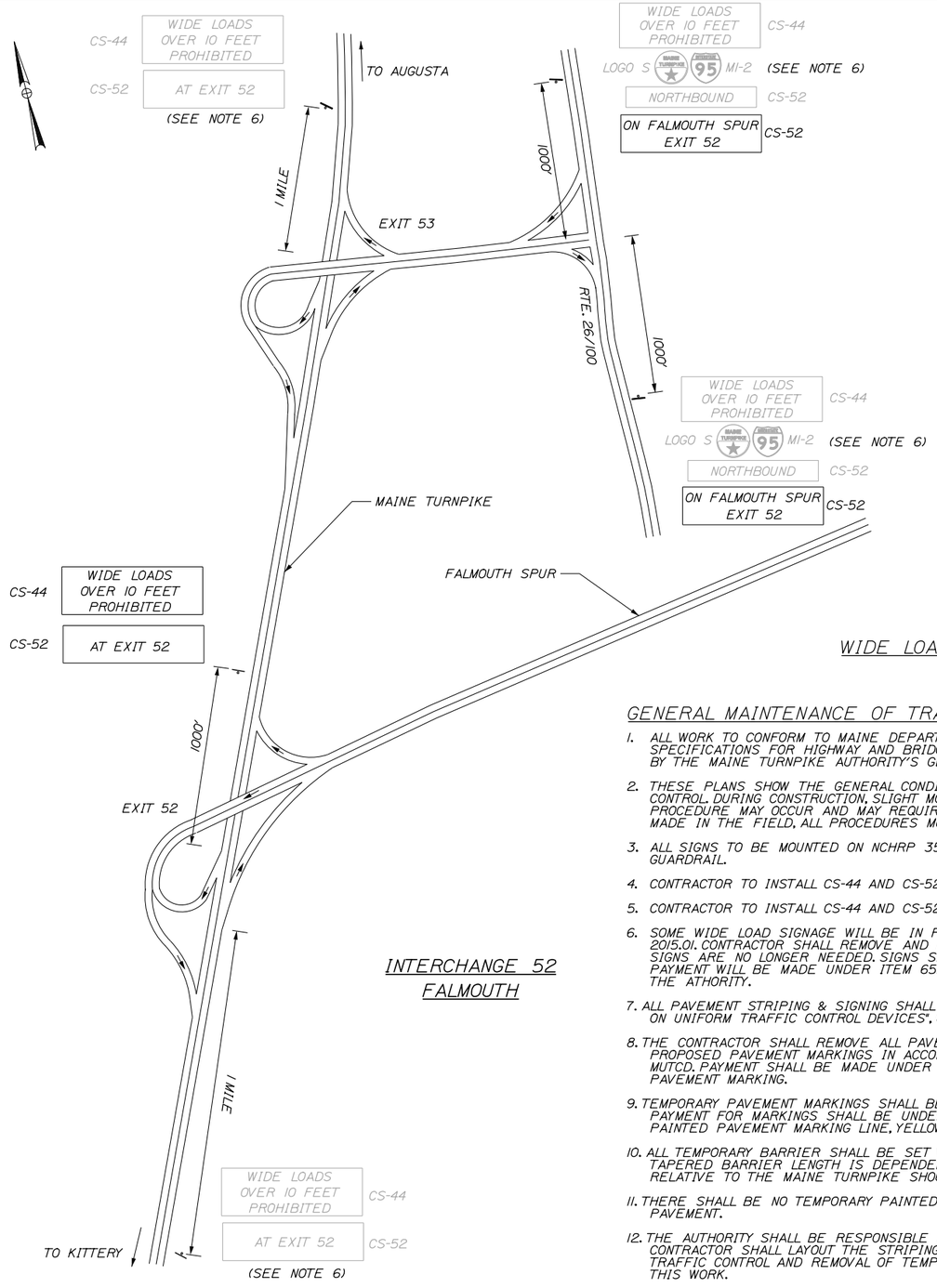

INTERCHANGE 52
FALMOUTH

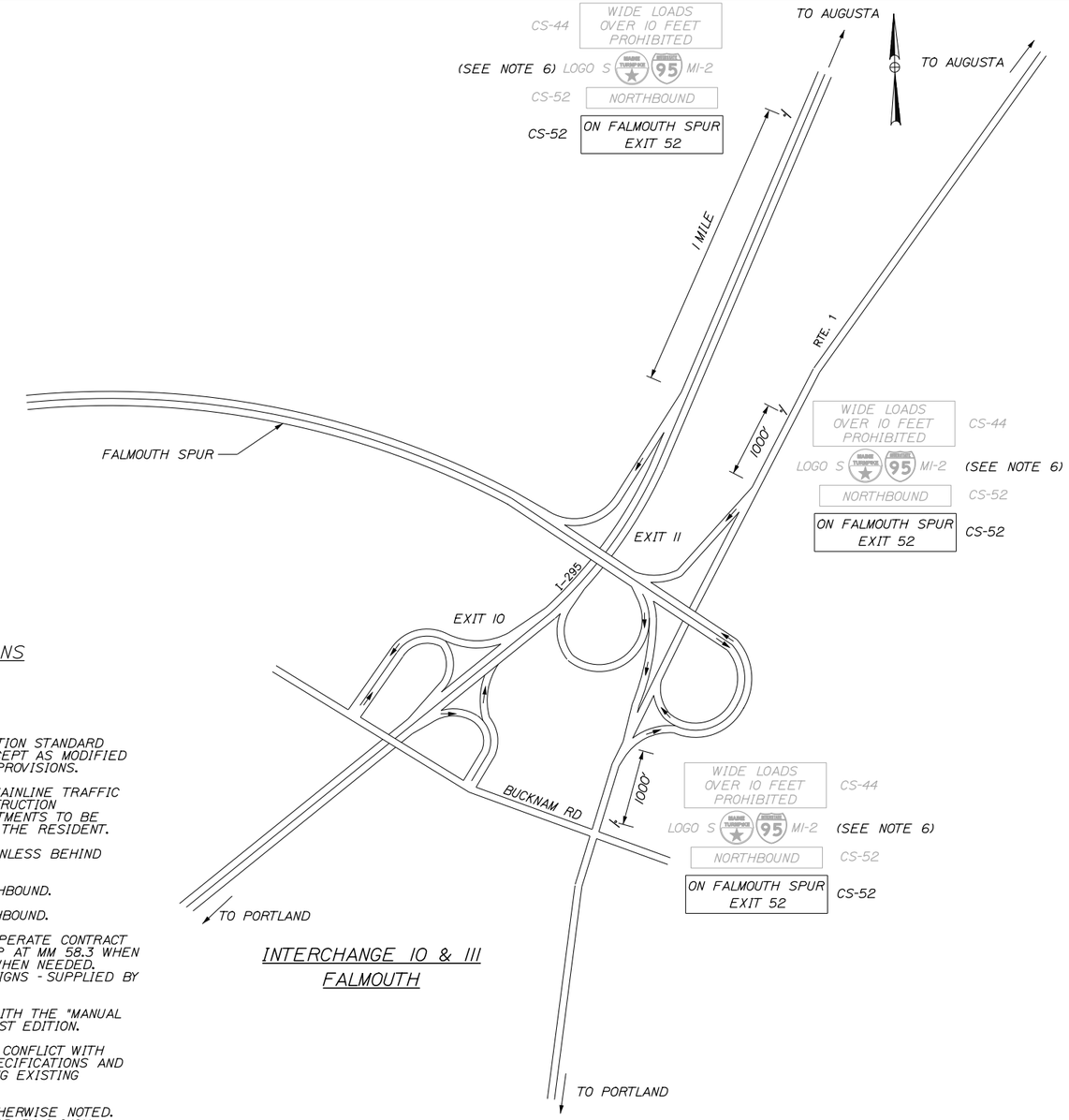

INTERCHANGE 10 & 11
FALMOUTH

WIDE LOAD SIGN LOCATIONS

GENERAL MAINTENANCE OF TRAFFIC NOTES:

1. ALL WORK TO CONFORM TO MAINE DEPARTMENT OF TRANSPORTATION STANDARD SPECIFICATIONS FOR HIGHWAY AND BRIDGES, 2002 EDITION, EXCEPT AS MODIFIED BY THE MAINE TURNPIKE AUTHORITY'S GENERAL AND SPECIAL PROVISIONS.
2. THESE PLANS SHOW THE GENERAL CONDITION FOR TURNPIKE MAINLINE TRAFFIC CONTROL. DURING CONSTRUCTION, SLIGHT MODIFICATIONS IN CONSTRUCTION PROCEDURE MAY OCCUR AND MAY REQUIRE SOME MINOR ADJUSTMENTS TO BE MADE IN THE FIELD. ALL PROCEDURES MUST BE APPROVED BY THE RESIDENT.
3. ALL SIGNS TO BE MOUNTED ON NCHRP 350 APPROVED POSTS UNLESS BEHIND GUARDRAIL.
4. CONTRACTOR TO INSTALL CS-44 AND CS-52 NEAR MILE 43 NORTHBOUND.
5. CONTRACTOR TO INSTALL CS-44 AND CS-52 NEAR MILE 47 NORTHBOUND.
6. SOME WIDE LOAD SIGNAGE WILL BE IN PLACE AS PART OF SEPERATE CONTRACT 2015.01. CONTRACTOR SHALL REMOVE AND DELIVER TO SIGN SHOP AT MM 58.3 WHEN SIGNS ARE NO LONGER NEEDED. SIGNS SHALL BE UNCOVERED WHEN NEEDED. PAYMENT WILL BE MADE UNDER ITEM 652.351 - CONSTRUCTION SIGNS - SUPPLIED BY THE ATHORITY.
7. ALL PAVEMENT STRIPING & SIGNING SHALL BE IN ACCORDANCE WITH THE "MANUAL ON UNIFORM TRAFFIC CONTROL DEVICES", U.S.D.O.T., F.H.W.A., LATEST EDITION.
8. THE CONTRACTOR SHALL REMOVE ALL PAVEMENT MARKINGS THAT CONFLICT WITH PROPOSED PAVEMENT MARKINGS IN ACCORDANCE WITH THE SPECIFICATIONS AND MUTCD. PAYMENT SHALL BE MADE UNDER ITEM 627.77 - REMOVING EXISTING PAVEMENT MARKING.
9. TEMPORARY PAVEMENT MARKINGS SHALL BE PAINTED, UNLESS OTHERWISE NOTED. PAYMENT FOR MARKINGS SHALL BE UNDER ITEM 627.681 - TEMPORARY 6 INCH PAINTED PAVEMENT MARKING LINE, YELLOW OR WHITE.
10. ALL TEMPORARY BARRIER SHALL BE SET WITH A MINIMUM 8:1 TAPER. THE 8:1 TAPERED BARRIER LENGTH IS DEPENDENT ON THE LOCATION OF THE BARRIER RELATIVE TO THE MAINE TURNPIKE SHOULDERS OR LANES.
11. THERE SHALL BE NO TEMPORARY PAINTED PAVEMENT MARKINGS ON FINAL PAVEMENT.
12. THE AUTHORITY SHALL BE RESPONSIBLE FOR FINAL TURNPIKE STRIPING. THE CONTRACTOR SHALL LAYOUT THE STRIPING AND PROVIDE THE MAINTENANCE OF TRAFFIC CONTROL AND REMOVAL OF TEMPORARY PAVEMENT MARKINGS TO COMPLETE THIS WORK.

Date:5/15/2015

Filename: 015_Wide Load Restriction.dgn

Scale: N.T.S.

No.	Revision	By	Date

Designed by: HNTB

CONSULTANT PROJECT MANAGER: R. Bruce Munger, P.E.

	By	Date		By	Date
Designed	WA	05/15	Checked	RBM	05/15
Drawn	WA	05/15	In Charge of	RAL	05/15

HNTB CORPORATION
340 County Road, Suite 6-C
Westbrook, ME 04092
TEL (207) 774-5155
FAX (207) 228-0909

MAINE TURNPIKE

THE GOLD STAR MEMORIAL HIGHWAY

MTA PROJECT MANAGER: William Yates

FALMOUTH SPUR TOLL PLAZA
ORT CONVERSION

MAINTENANCE OF TRAFFIC
WIDE LOAD RESTRICTION SIGN PLAN

SHEET NUMBER: TC-07

CONTRACT:2015.13

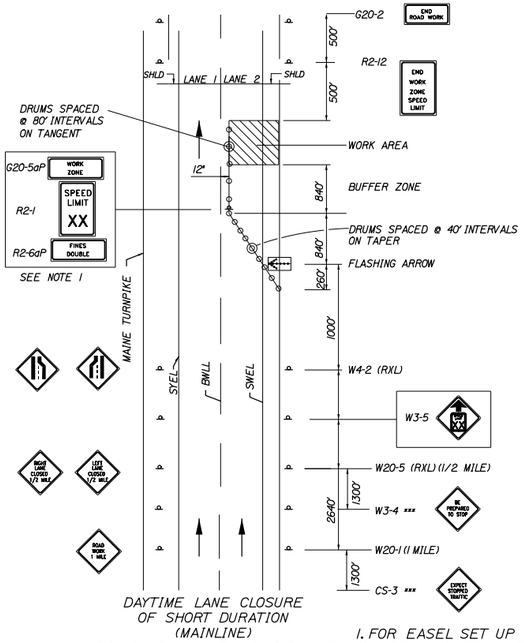

DAYTIME LANE CLOSURE
OF SHORT DURATION
(MAINLINE)

SINGLE LANE CLOSURE SIGNS ON EASELS

1. FOR EASEL SET UP ONLY. THIS SIGN IS NOT BRACKETED. ONE SIGN ASSEMBLY IS PLACED AT THE END OF THE TAPER .

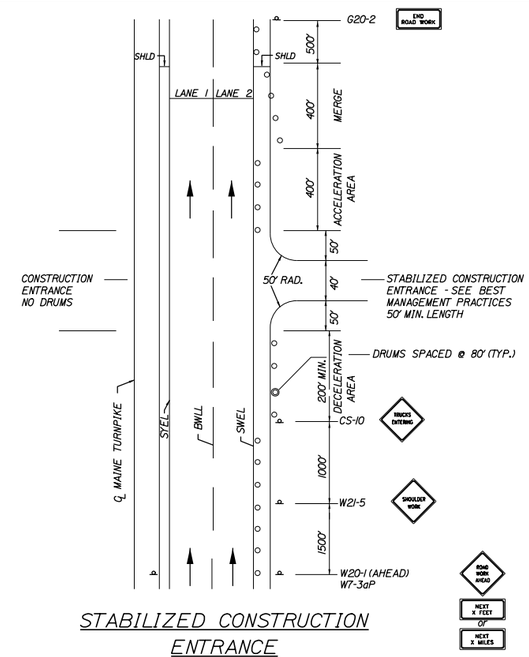

STABILIZED CONSTRUCTION ENTRANCE

1. SIGN G20-2 IS NOT REQUIRED IF ENTRANCE IS WITHIN THE WORK ZONE.

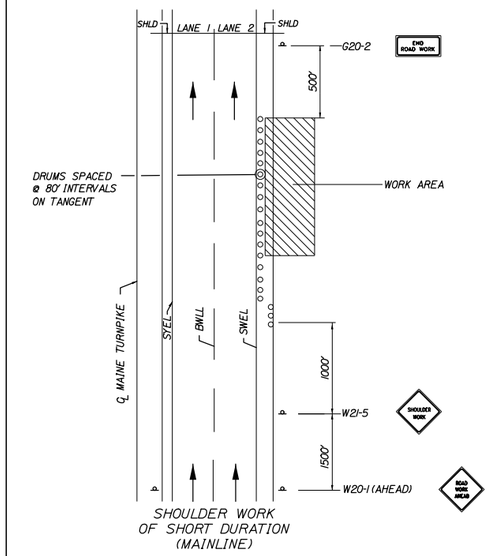

SHOULDER WORK
OF SHORT DURATION
(MAINLINE)

SHOULDER WORK

1. THE W20-1 AND G20-2 SIGNS ARE NOT REQUIRED IF THE SHOULDER CLOSURE IS WITHIN A PREVIOUSLY ESTABLISHED WORK ZONE.

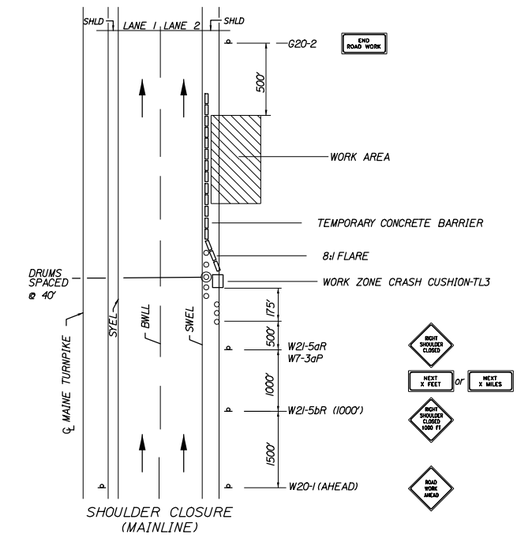

SHOULDER CLOSURE
(MAINLINE)

SHOULDER CLOSURE

1. THE W20-1 AND G20-2 SIGNS ARE NOT REQUIRED IF THE SHOULDER CLOSURE IS WITHIN A PREVIOUSLY ESTABLISHED WORK ZONE.

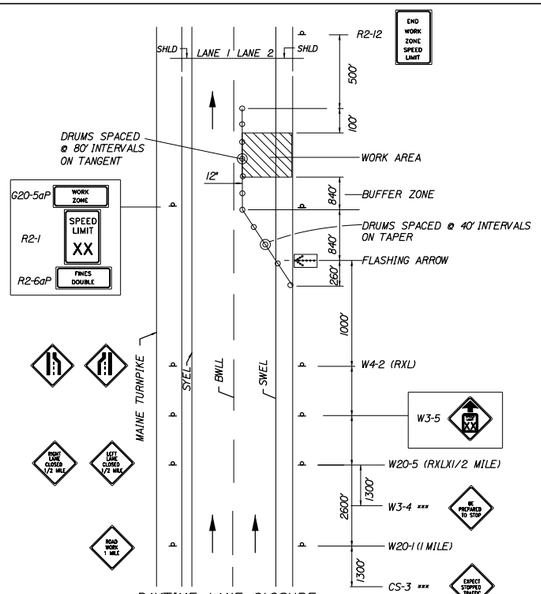

DAYTIME LANE CLOSURE
OF SHORT DURATION
(MAINLINE)

SINGLE LANE CLOSURE - POST MOUNTED SIGN SETUP

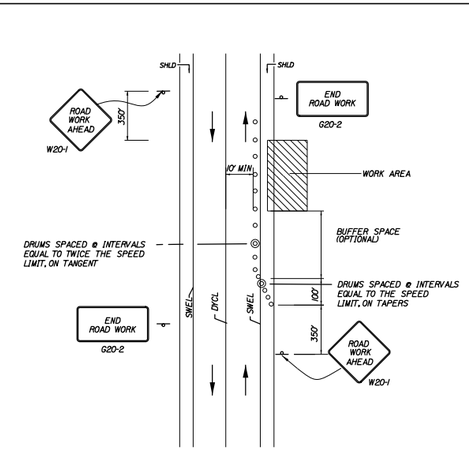

TEMP. LOCAL ROAD SHOULDER CLOSURE

1. FOR SHORT DURATION WORK (<1 HOUR), THE TAPER AND CHANNELIZATION DEVICES MAY BE OMITTED IF SHADOW VEHICLE IS PRESENT WITH ACTIVATED HIGH-INTENSITY ROTATING, FLASHING, OSCILLATING OR STROBE LIGHTS.

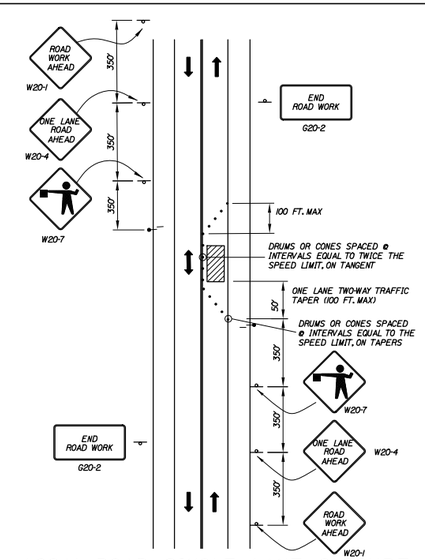

LOCAL ROAD SINGLE LANE CLOSURE

1. ROAD WORK AHEAD & END ROAD WORK SIGNS MAY BE OMITTED FOR SHORT DURATION OPERATIONS (LESS THAN 1 HOUR).
2. FLAGGERS SHALL BE LOCATED SO THEY ARE CLEARLY VISIBLE TO APPROACHING DRIVERS.
3. SIGN SPACING ASSUMES LOCAL ROAD SPEED IS 40 MPH OR LESS.

ABBREVIATIONS FOR ALL M.O.T. PLANS

BWLL = BROKEN WHITE LANE LINE
SWEL = SOLID WHITE EDGE LINE
SYEL = SOLID YELLOW EDGE LINE
TBWLL - TEMPORARY BROKEN WHITE LANE LINE
TSWEL = TEMPORARY SOLID WHITE EDGE LINE
TSYEL = TEMPORARY SOLID YELLOW EDGE LINE

GENERAL NOTES

1. FOR SIGN DETAILS, SEE MAINTENANCE OF TRAFFIC SIGN SUMMARY SHEETS.

2. "TRUCKS ENTERING" SIGN SHALL ALSO BE USED AT LOCATIONS WHERE TRUCKS ENTER THE WORK ZONE FROM THE TRAVEL LANE.

3. SIGNS DESIGNATED WITH *** SHALL BE USED DURING STOPPAGES OF TRAFFIC.

4. TRUCK MOUNTED ATTENUATOR SHALL NOT BE LOCATED WITHIN THE BUFFER ZONE.

Date:5/15/2015

Filename: 016_MOTDetails.dgn

Scale:

No.	Revision	By	Date

Designed by:

HNTB

CONSULTANT PROJECT MANAGER: R. Bruce Munger, P.E.

	By	Date		By	Date
Designed	TMH	05/15	Checked	HME	05/15
Drawn	PMK	05/15	In Charge of	RAL	05/15

HNTB CORPORATION
340 County Road, Suite 6-C
Westbrook, ME 04092
TEL (207) 774-5155
FAX (207) 228-0909

MAINE TURNPIKE

THE GOLD STAR MEMORIAL HIGHWAY

MTA PROJECT MANAGER: William Yates

FALMOUTH SPUR TOLL PLAZA
ORT CONVERSION

MAINTENANCE OF TRAFFIC
DETAILS 1

SHEET NUMBER: TC-08

CONTRACT:2015.13

MAINLINE CONSTRUCTION SIGN SUMMARY

IDENTIFICATION NUMBER	SIZE OF SIGN WIDTH	SIZE OF SIGN HEIGHT	TEXT	TEXT DIMENSIONS (INCHES) LETTER HEIGHT	TEXT DIMENSIONS (INCHES) VERTICAL SPACING	TEXT DIMENSIONS (INCHES) ARROW RTE. MKR.	NUMBER OF SIGNS REQUIRED	COLOR BACK-GROUND	COLOR LEGEND BORDER	AREA IN SQUARE FEET
CS-3	48"	48"	EXPECT STOPPED TRAFFIC	6" 6"	4"		5			16.00 (80.0)
CS-44	96"	48"	WIDE LOADS OVER 10 FEET PROHIBITED	8"C 8"C 8"C	6" 6" 6" 6"		1	ORANGE	BLACK	32.00 (32.0)
CS-52	48"	48"	TOLL PLAZA WORK AHEAD	TEXT DIMENSIONS SHALL CONFORM TO THE STANDARD HIGHWAY SIGNS 2004 EDITION AND 2012 SUPPLEMENT			4	ORANGE	BLACK	16.00 (64.0)
CS-52	96"	34"	ON FALMOUTH SPUR EXIT 52 ON FALMOUTH SPUR EXIT 11 AT EXIT 52	8"C 8"C	6" 6" 6"		2 4 1	ORANGE	BLACK	22.67 (158.7)
CS-53	48"	48"	LANE CLOSED	6" 6"	4"		5	ORANGE	BLACK	16.00 (80.0)
CS-55*	72"	48"	CASH LEFT LANE / E-ZPass RIGHT LANE				1	ORANGE		24.00 (24.0)
G20-2	48"	24"	END ROAD WORK	TEXT DIMENSIONS SHALL CONFORM TO THE STANDARD HIGHWAY SIGNS 2004 EDITION AND 2012 SUPPLEMENT			6	ORANGE	BLACK	8.00 (48.0)
G20-5aP	48"	24"	WORK ZONE	6" 6"	4.5"		6	ORANGE	BLACK	8.00 (48.0)
OM3-L	12"	36"		N/A			1	YELLOW	BLACK	3.00 (3.0)
OM3-R	12"	36"		N/A			1	YELLOW	BLACK	3.00 (3.0)
R1-1	48"	48"	STOP	TEXT DIMENSIONS SHALL CONFORM TO THE STANDARD HIGHWAY SIGNS 2004 EDITION AND 2012 SUPPLEMENT			1	RED	WHITE	16.00 (16.00)
R1-2	60"	60" 60"	YIELD				1	WHITE	RED	12.50 (12.5)
R2-1 (25) (45)	48"	60"	SPEED LIMIT XX				4 6	WHITE	BLACK	20.00 (200.0)

*SEE APPENDIX G IN THE SPECIFICATIONS FOR SIGN DETAILS

MAINLINE CONSTRUCTION SIGN SUMMARY

IDENTIFICATION NUMBER	SIZE OF SIGN WIDTH	SIZE OF SIGN HEIGHT	TEXT	TEXT DIMENSIONS (INCHES) LETTER HEIGHT	TEXT DIMENSIONS (INCHES) VERTICAL SPACING	TEXT DIMENSIONS (INCHES) ARROW RTE. MKR.	NUMBER OF SIGNS REQUIRED	COLOR BACK-GROUND	COLOR LEGEND BORDER	AREA IN SQUARE FEET
R2-6aP	48"	24"	FINES DOUBLED	6" 6"	4.5"		6	WHITE	BLACK	8.00 (48.0)
R2-12	48"	60"	END WORK ZONE SPEED	TEXT DIMENSIONS SHALL CONFORM TO THE STANDARD HIGHWAY SIGNS 2004 EDITION AND 2012 SUPPLEMENT			4	WHITE	BLACK	20.00 (80.0)
R11-2	30"	48"	ROAD CLOSED				2	WHITE	BLACK	10.00 (20.0)
W3-1	48"	48"					1	ORANGE	BLACK	16.00 (16.0)
W3-2a	48"	48"					1	ORANGE	BLACK	16.00 (16.0)
W3-4	48"	48"	BE PREPARED TO STOP				4			16.00 (64.0)
W3-5 (45)	48"	48"	SPEED LIMIT 45				6	ORANGE	BLACK	16.00 (96.0)
W4-2L	48"	48"					6	ORANGE	BLACK	16.00 (96.0)
W4-2R	48"	48"					6			16.00 (96.0)
W20-1 (AHEAD) (1 MILE)	48"	48"	ROAD WORK AHEAD				7 4			16.00 (176.0)
W20-5L (AHEAD) (1/2" MILE)	48"	48"	LEFT LANE CLOSED AHEAD				4 4			16.00 (128.0)
W20-5R (AHEAD) (1/2" MILE)	48"	48"	RIGHT LANE CLOSED AHEAD				4 4			16.00 (128.0)

Date:5/15/2015

Filename: 017_TCP Sign Summary.dgn

Scale: N.T.S.

No.	Revision	By	Date

Designed by: HNTB

CONSULTANT PROJECT MANAGER: R. Bruce Munger, P.E.

	By	Date		By	Date
Designed	CNP	05/15	Checked	TMH	05/15
Drawn	CNP	05/15	In Charge of	RAL	05/15

HNTB CORPORATION
340 County Road, Suite 6-C
Westbrook, ME 04092
TEL (207) 774-5155
FAX (207) 228-0909

MAINE TURNPIKE

THE GOLD STAR MEMORIAL HIGHWAY

MTA PROJECT MANAGER: William Yates

FALMOUTH SPUR TOLL PLAZA
ORT CONVERSION

MAINTENANCE OF TRAFFIC
SIGN SUMMARY 1

SHEET NUMBER: TC-09

CONTRACT:2015.13

MAINLINE CONSTRUCTION SIGN SUMMARY

IDENTIFICATION NUMBER	SIZE OF SIGN		TEXT	TEXT DIMENSIONS (INCHES)				NUMBER OF SIGNS REQUIRED	COLOR		AREA IN SQUARE FEET
	WIDTH	HEIGHT		LETTER HEIGHT	VERTICAL SPACING	ARROW RTE. MKR.			BACK-GROUND	LEGEND BORDER	
W20-4	48"	48"		TEXT DIMENSIONS SHALL CONFORM TO THE STANDARD HIGHWAY SIGNS 2004 EDITION AND 2012 SUPPLEMENT				2			16.00 (32.0)
W20-7	48"	48"						2			16.00 (32.0)
W21-5	48"	48"						2			16.00 (32.0)
W21-5aR	48"	48"						2			16.00 (32.0)
W21-5bR	48"	48"						2			16.00 (32.0)
W22-1	48"	48"						5			16.00 (80.0)
W22-3	42"	36"						4			10.50 (42.0)

Date:5/15/2015

Filename: 018_TCP Sign Summary2.dgn

Scale: N.T.S.			
No.	Revision	By	Date

Designed by: HNTB

CONSULTANT PROJECT MANAGER: R. Bruce Munger, P.E.

	By	Date		By	Date
Designed	CNP	05/15	Checked	TMH	05/15
Drawn	CNP	05/15	In Charge of	RAL	05/15

HNTB CORPORATION
340 County Road, Suite 6-C
Westbrook, ME 04092
TEL (207) 774-5155
FAX (207) 228-0909

MAINE TURNPIKE

THE GOLD STAR MEMORIAL HIGHWAY

MTA PROJECT MANAGER: William Yates

FALMOUTH SPUR TOLL PLAZA
ORT CONVERSION

MAINTENANCE OF TRAFFIC
SIGN SUMMARY 2

SHEET NUMBER: TC-10

CONTRACT:2015.13

GUARDRAIL EARTHWORK AND PAVEMENT REPAIR NOTES

1. ALL EARTHWORK AND PAVEMENT REPAIRS ASSOCIATED WITH GUARDRAIL INSTALLATIONS AND/OR MODIFICATIONS FOR THIS CONTRACT SHALL BE INCIDENTAL TO THE GUARDRAIL ITEMS UNLESS OTHERWISE NOTED.

2. ALL DISTURBED AREAS DUE TO THE WORK PERFORMED UNDER THIS CONTRACT FOR GUARDRAIL REPAIRS, MODIFICATION AND/OR INSTALLATIONS SHALL BE REPAIRED AND RESTORED TO ORIGINAL CONDITION. GRASSED AREAS SHALL RECEIVE 4" OF LOAM, SEED, FERTILIZER AND MULCH. IN PAVED AREAS, SUBBASE GRAVEL SHALL BE REPLACED AND RECOMPACTED WITH MAINE DOT TYPE-D GRAVEL AND HOT MIX ASPHALT TO A THICKNESS TO MATCH SURROUNDING PAVEMENT.

3. COMPACTION OF EARTH AND/OR SUBBASE GRAVEL AROUND GUARDRAIL POSTS DISTURBED DURING THE WORK IS REQUIRED. ALL POSTS SHALL BE PLUMB AFTER COMPACTION.

4. EXCAVATION NECESSARY TO MAINTAIN DRAINAGE WAYS OUTSIDE OF THE FLEAT 350 WIDENING OR THE SHOULDER WIDENING WORK AREA SHALL BE PAID FOR UNDER ITEM 631.12 ALL PURPOSE EXCAVATOR AS APPROVED BY THE RESIDENT ENGINEER. EXCAVATED MATERIAL SHALL BE USED TO GRADE ANY PROPOSED SLOPE AREA OUTSIDE OF 1:1 SLOPE LIMIT OR USED TO FLATTEN SLOPES OUTSIDE THE WORK AREA AS APPROVED BY THE RESIDENT. PLACEMENT AND COMPACTION OF THE EXCAVATED MATERIAL WILL NOT BE MEASURED SEPARATELY FOR PAYMENT.

5. SLOPES CONSTRUCTED FROM THE ABOVE NOTED EXCAVATED MATERIAL SHALL BE LOAMED, SEEDED AND MULCHED. LOAM, SEED AND MULCH WILL NOT BE MEASURED FOR PAYMENT AND SHALL BE INCIDENTAL TO THE CONTRACT.

6. SLOPES CONSTRUCTED FOR ITEM 205.51 SHALL BE 3:1 WITHIN 50 FEET OF THE TERMINAL END AND CAN BE 2:1 IN ALL OTHER AREAS.

GUARDRAIL INSTALLATION AND MODIFICATION NOTES

1. THE CONTRACTOR SHALL FOLLOW ALL MANUFACTURER'S INSTALLATION INSTRUCTIONS FOR THE INSTALLATION AND/OR MODIFICATION OF ANY AND ALL GUARDRAIL COMPONENTS TO BE INSTALLED UNDER THIS CONTRACT. THE CONTRACTOR SHALL NOTIFY THE RESIDENT ENGINEER IF THE CONTRACTOR DISCOVERS CONFLICTS OR IRREGULARITIES OF ANY SORT BETWEEN THE MANUFACTURER'S INSTALLATION INSTRUCTIONS AND THESE CONTRACT DOCUMENTS.

2. THE CONTRACTOR IS REQUIRED TO HAVE AN APPROVED CRASH END TREATMENT ON ALL GUARDRAIL ENDS IN ALL WORK AREAS AT THE END OF EACH DAY. THE CONTRACTOR SHALL ENSURE THAT ENOUGH TIME EXISTS IN THE WORK DAY TO COMPLETE ALL MODIFICATIONS AND/OR INSTALLATIONS TO END TERMINALS. THE CONTRACTOR SHALL ENSURE THAT ALL PARTS AND MANPOWER ARE ON-SITE PRIOR TO UNDERTAKING ANY GUARDRAIL MODIFICATIONS.

3. GUARDRAIL HEIGHT SHALL BE INSTALLED OR ADJUSTED TO 30" +0", -1/2" HEIGHT. GUARDRAIL HEIGHT SHALL BE MEASURED FROM THE EDGE OF PAVEMENT WHEN WITHIN 2 FEET. IF GUARDRAIL IS OFFSET FROM EDGE OF PAVEMENT GREATER THAN 2 FEET, THEN HEIGHT OF RAIL SHALL BE MEASURED AT GROUND ELEVATION ADJACENT TO EACH POST BELOW THE RAIL TO THE TOP OF GUARDRAIL AND AFTER FINAL GRADING OF SHOULDER.

4. THE CONTRACTOR SHALL REMOVE AND DISPOSE OF ALL CUT BOLTS, DISCARDED PARTS, TRASH, PAVEMENT DEBRIS, ETC., AFTER COMPLETING GUARDRAIL MODIFICATIONS AND/OR INSTALLATIONS.

5. CONNECTIONS FOR PROPOSED RAIL TO EXISTING RAIL SHALL BE INCIDENTAL TO THE INSTALLATION OF PROPOSED GUARDRAIL.

6. FLEAT 350 TERMINALS INSTALLED UNDER THIS CONTRACT SHALL BE INSTALLED AT A HEIGHT OF 27.5" AT THE TERMINAL HEAD AND TRANSITIONING UP TO THE REQUIRED HEIGHT OF RAIL OF 30" +0", -1/2" OVER A 25 LINEAR FOOT LENGTH. HEIGHT OF FLEAT 350 RAIL SHALL BE MEASURED FROM THE GROUND ELEVATION UNDER THE FLEAT RAIL PANELS TO THE TOP OF RAIL.

7. SOIL ANCHOR TUBES INSTALLED AS PART OF CAT, FLEAT OR TRAILING TERMINAL ENDS SHALL NOT PROTRUDE FROM THE GROUND MORE THAN 3½". ADDITIONAL SITE GRADING MAY BE REQUIRED TO ADJUST SOIL TUBE REVEAL AND IF REQUIRED SHALL NOT DIRECT STORMWATER SURFACE DRAINAGE TOWARDS THE SHOULDER OR TRAVEL WAY. ADDITIONAL SITE GRADING SHALL BE INCIDENTAL TO THE END TERMINAL INSTALLATION.

8. TRANSITION RAIL HEIGHT ON TERMINAL END-ANCHORED ENDS FROM 27½" AT THE END OF THE RAIL TO 30" HEIGHT OVER A 25 LINEAR FOOT LENGTH.

9. TWO DELINEATOR POSTS SHALL BE INSTALLED AT EACH FLEAT.

EROSION

1. EROSION CONTROL BLANKET SHALL BE INSTALLED ON ALL DISTURBED 2:1 SLOPES AND IN FLOW LINE OF ALL DISTURBED DITCHES AFTER LOAM AND SEED HAVE BEEN INSTALLED.

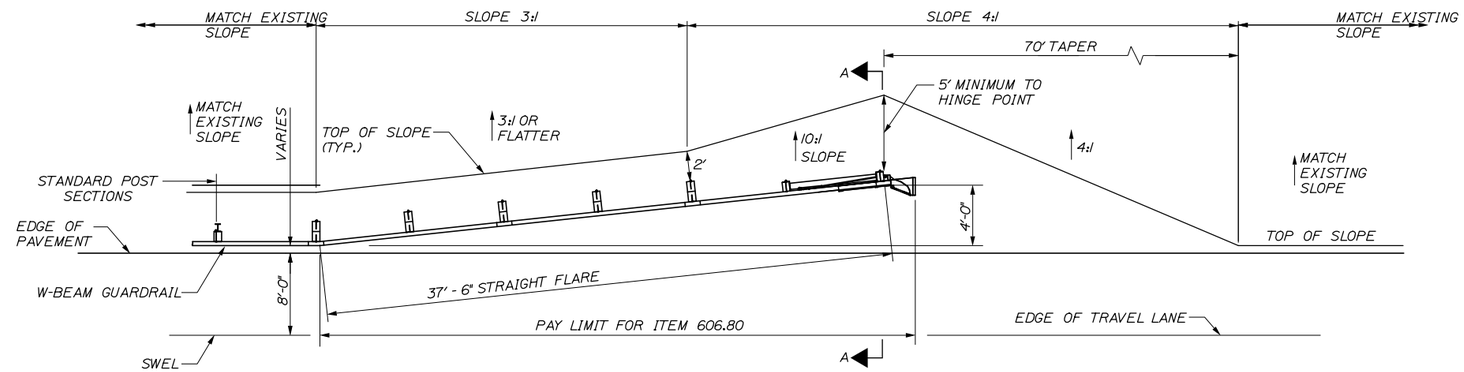

WIDEN SHOULDER FOR GUARDRAIL 350 FLARED TERMINAL - ITEM 606.754

PLAN

N.T.S.

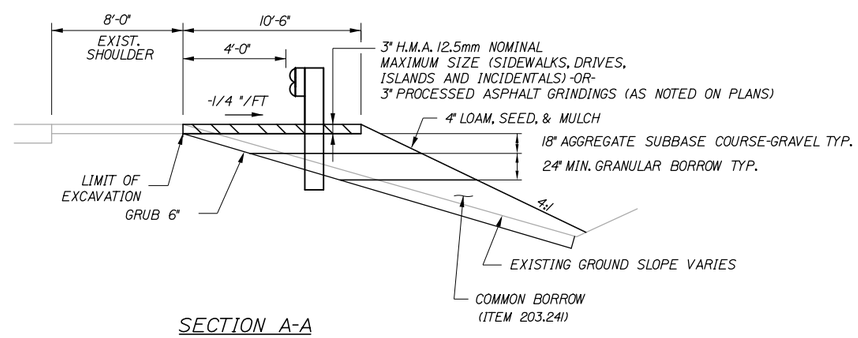

SECTION A-A

FILL DETAIL

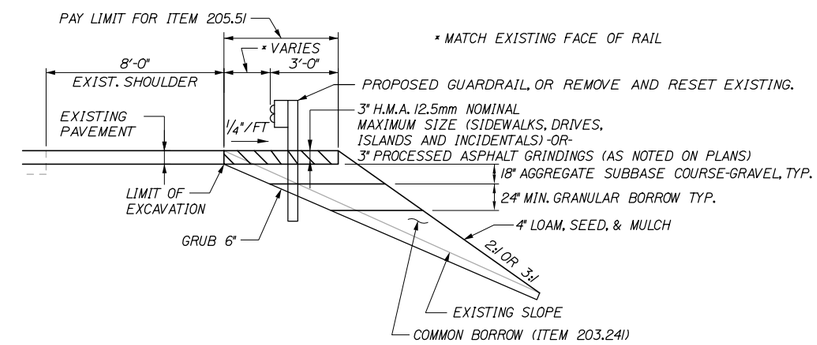

SHOULDER WIDENING DETAIL - ITEM 205.51

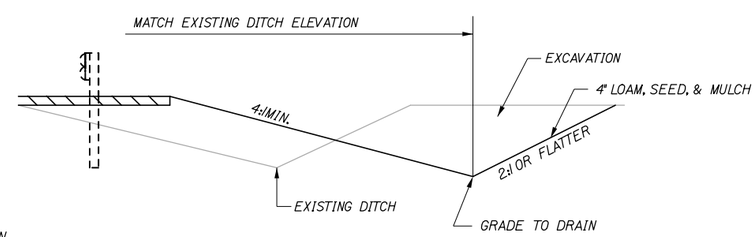

SECTION A-A

DITCH DETAIL

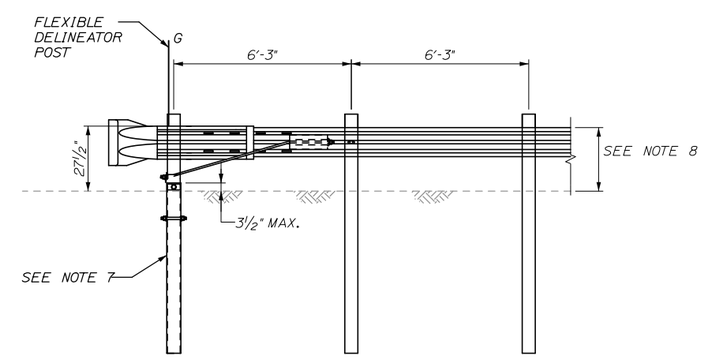

TERMINAL END - ANCHORED END

(ITEM 606.278)

⅜" = 1'-0"

Date:5/15/2015

Filename: 019_GREndTreatmentDetails.dgn

Scale: AS NOTED			
No.	Revision	By	Date

Designed by: HNTB

CONSULTANT PROJECT MANAGER: R. Bruce Munger, P.E.

	By	Date		By	Date
Designed	HME	05/15	Checked	-	05/15
Drawn	MPC	05/15	In Charge of	RAL	05/15

HNTB CORPORATION
340 County Road, Suite 6-C
Westbrook, ME 04092
TEL (207) 774-5155
FAX (207) 228-0909

MAINE TURNPIKE

THE GOLD STAR MEMORIAL HIGHWAY

MTA PROJECT MANAGER: William Yates

FALMOUTH SPUR TOLL PLAZA
ORT CONVERSION

GUARDRAIL END TREATMENT DETAILS

SHEET NUMBER: BAR-01

CONTRACT:2015.13

CURB NOTES:

1. CURBING SHALL BE EITHER PRECAST CONCRETE, CAST-IN-PLACE CONCRETE OR GRANITE TO MEET DIMENSIONS SHOWN ON THE PLANS . CURBING SHALL BE PAID UNDER ITEM 609.191 CONCRETE CURB TYPE 2.
2. CONCRETE CURBS USED IN CONJUNCTION WITH THRIE-BEAM BRIDGE ATTACHMENT SHALL BE TYPE 2, SEE DETAILS THIS SHEET. CONCRETE CURBS SHALL BE CONTINOUS WITHOUT DRAINAGE CUTS.
3. CURB TRANSITION SHALL BE INCLUDED FOR PAYMENT UNDER ITEM 609.191 CONCRETE CURB TYPE 2.
4. SAWCUTTING EXISTING PAVEMENT, CONCRETE FILL, AND PAVEMENT TO LIMITS SHOWN SHALL BE INCIDENTAL TO ITEM 609.191

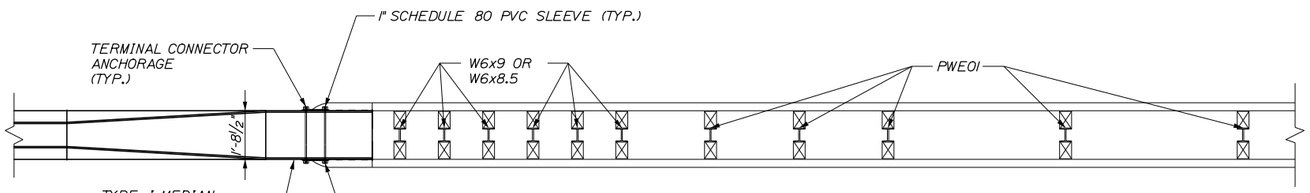

PLAN VIEW
3/8" = 1'-0"

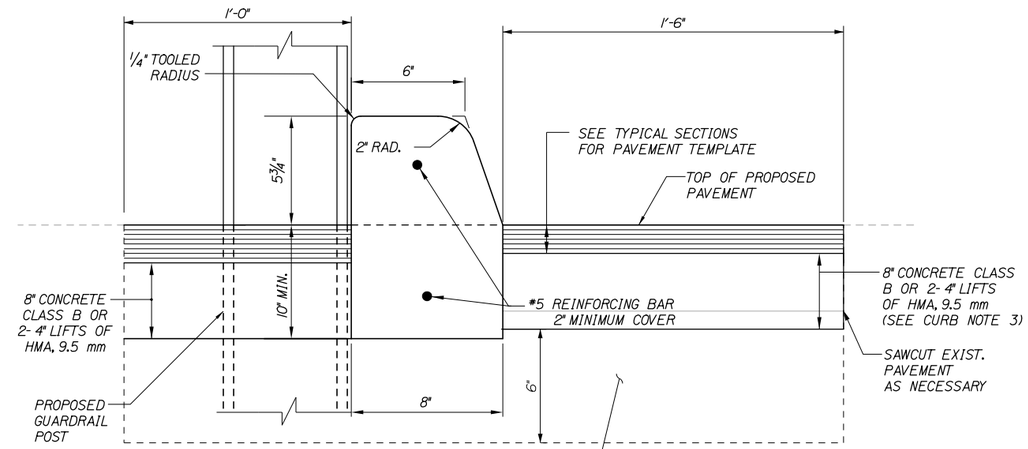

CONCRETE CURB TYPE 2
ITEM 609.191
3"=1'-0"

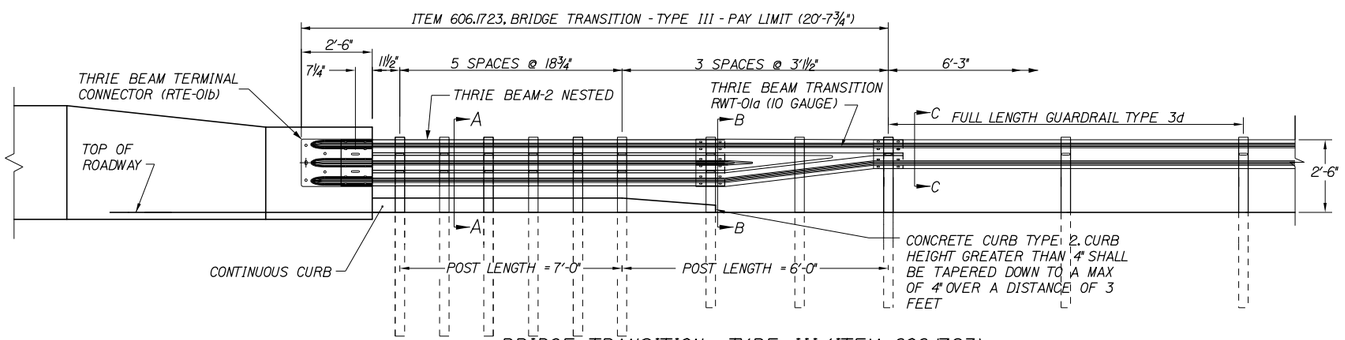

BRIDGE TRANSITION - TYPE III (ITEM 606.1723)
3/8" = 1'-0"

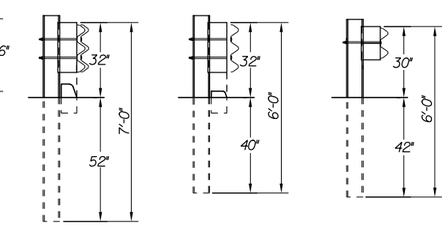

SECTION A-A SECTION B-B SECTION C-C

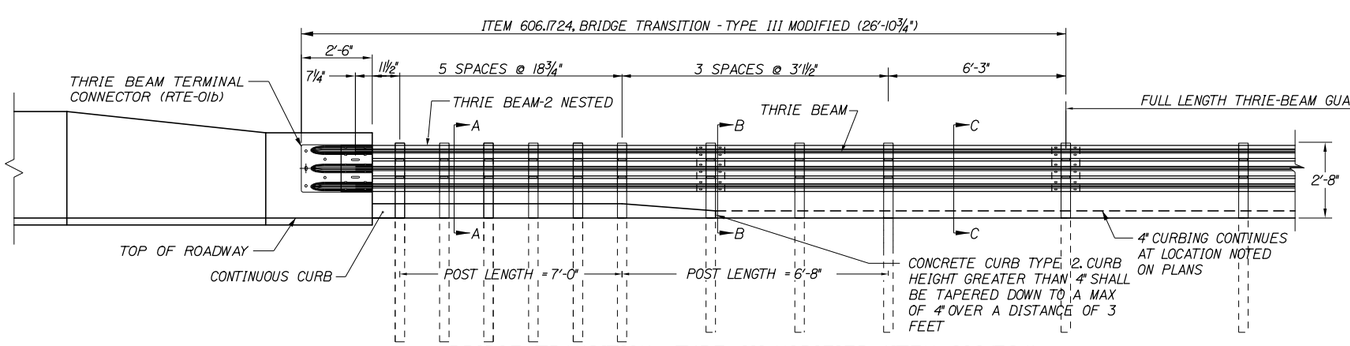

BRIDGE TRANSITION - TYPE III MODIFIED (ITEM 606.1724)
3/8" = 1'-0"

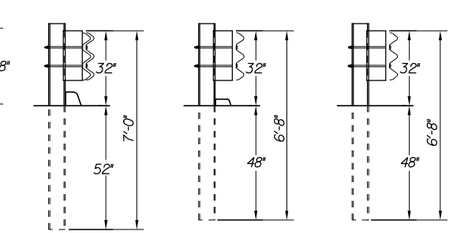

SECTION A-A SECTION B-B SECTION C-C

GENERAL NOTES:

1. ADDITIONAL HOLES MAY BE MADE IN THE THRIE-BEAM PANELS BY DRILLING, PUNCHING, OR OTHER MEANS THAT PRODUCE A NEAT, CLEAN HOLE. BURNING HOLES WILL NOT BE ALLOWED.
2. THRIE BEAM SHALL BE PLACED WITH THE COMPOSITE BLOCKOUT FACE IN FRONT OF OR DIRECTLY ABOVE THE CURB FACE.
3. RAIL ELEMENT SHALL MEET ALL REQUIREMENTS OF AASHTO M-180 EXCEPT AS MODIFIED ON THE PLANS. THE THRIE BEAM TRANSITION TO W-BEAM SHALL BE OF THE SAME MATERIAL, BUT SHALL NOT BE LESS THAN 10 GAUGE.
4. AFTER INSTALLATION IS COMPLETE, UPSET THE THREAD ON THE ANCHOR BOLTS IN THREE PLACES AROUND EACH BOLT, AT THE JUNCTION OF THE NUT AND THE EXPOSED THREAD, WITH A CENTER PUNCH OR SIMILAR TOOL.
5. STANDARD BARRIER HARDWARE HAS BEEN USED TO DEVELOP THESE GUARDRAIL ATTACHMENTS. DESIGNATIONS PROVIDED IN PARENTHESIS RELATE TO STANDARD ELEMENTS DETAILED IN "A GUIDE TO STANDARDIZED BARRIER RAIL HARDWARE," 1979, AASHTO-AGC-ARTBA JOINT COOPERATE COMMITTEE.
6. 1" HOLE IN CONCRETE SHALL BE FORMED BY A METHOD APPROVED BY THE ENGINEER
7. FOR THE GUARDRAIL TRANSITION, SECTION C-C GUARDRAIL TYPE 3d EXISTING OR PROPOSED SHALL TAPER FROM 30" TO TOP OF POST AT TRANSITION TO 27" OVER 50' MIN.
8. THRIE BEAM BRIDGE ATTACHMENT SHALL HAVE 3" x 7/8" SLOTS AT THE FIRST BOLT CONNECTIONS ON THE BRIDGE DECK. THE THREADS ON THE BOLTS AT THE SLOTS SHALL BE UPSET AT THE JUNCTION OF THE NUT WITH A CENTER PUNCH OR SIMILAR TOOL.

Scale: AS NOTED

No.	Revision	By	Date

Designed by: HNTB

CONSULTANT PROJECT MANAGER: R. Bruce Munger, P.E.

	By	Date		By	Date
Designed	HME	05/15	Checked	-	05/15
Drawn	MPC	05/15	In Charge of	RAL	05/15

HNTB CORPORATION
340 County Road, Suite 6-C
Westbrook, ME 04092
TEL (207) 774-5155
FAX (207) 228-0909

MAINE TURNPIKE

THE GOLD STAR MEMORIAL HIGHWAY

MTA PROJECT MANAGER: William Yates

FALMOUTH SPUR TOLL PLAZA
ORT CONVERSION

GUARDRAIL DETAILS
MEDIAN BARRIER GUARDRAIL TRANSITION

SHEET NUMBER: BAR-02

CONTRACT: 2015.13

Date: 5/15/2015

Filename: 020_GR-BarrierTransitionDetails.dgn

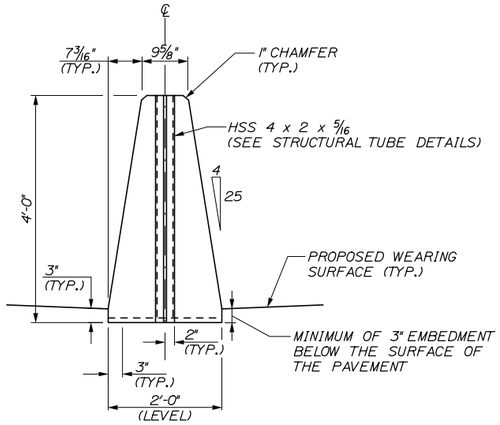

END VIEW (MASONRY)

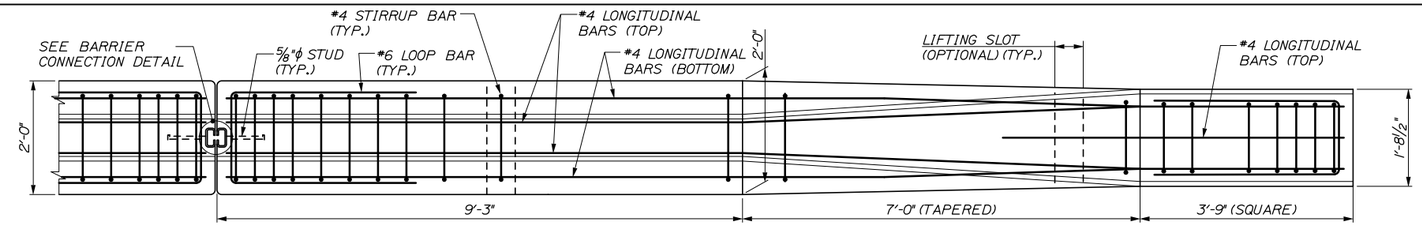

PLAN - ITEM 526.361, MEDIAN BARRIER TRANSITION TYPE I

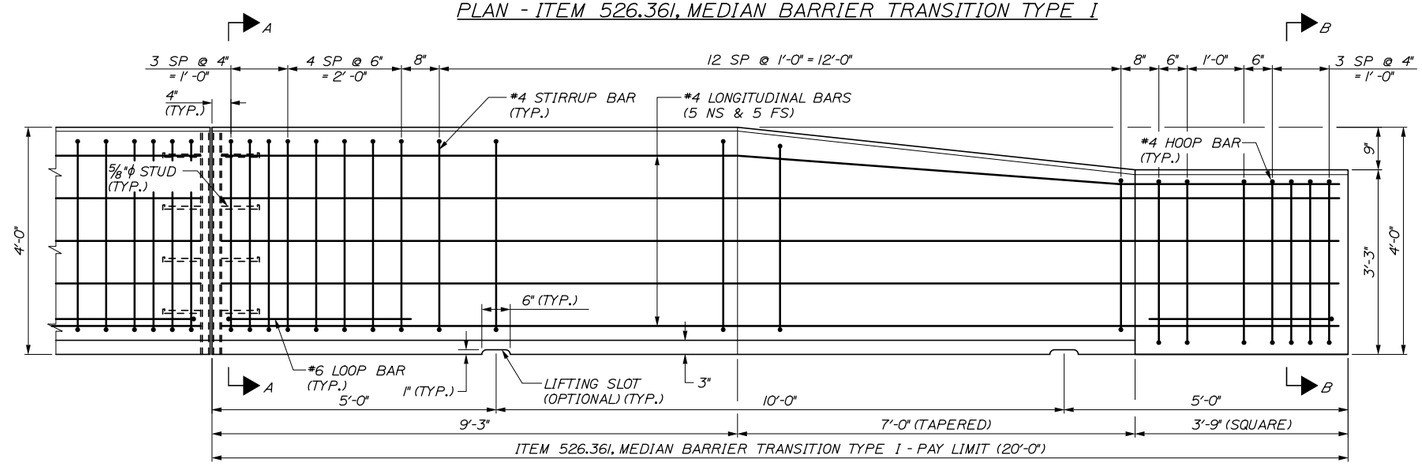

ELEVATION

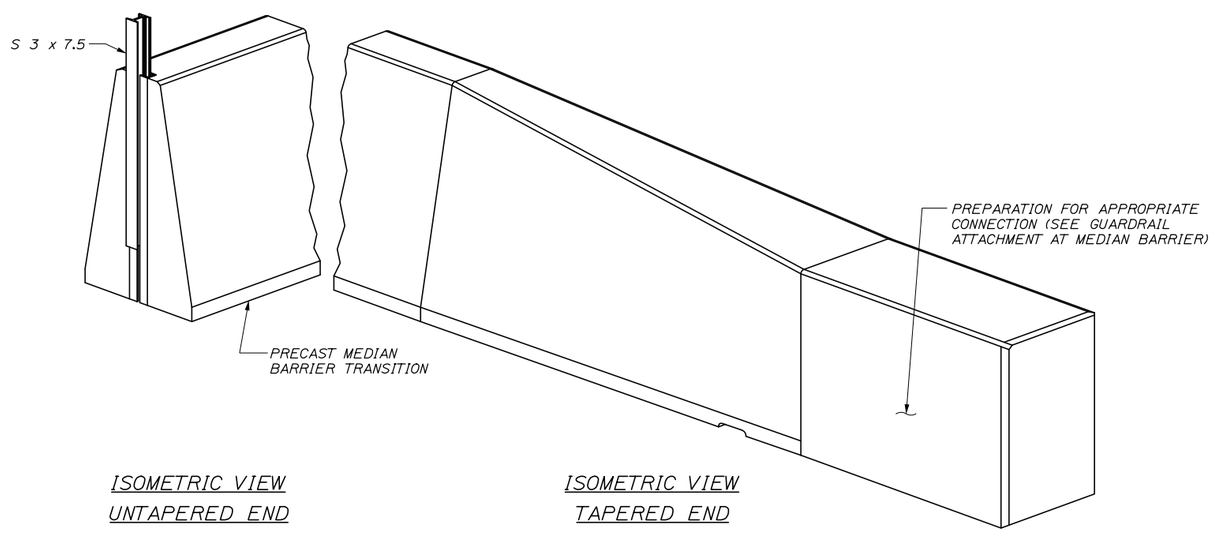

ISOMETRIC VIEW UNTAPERED END

ISOMETRIC VIEW TAPERED END

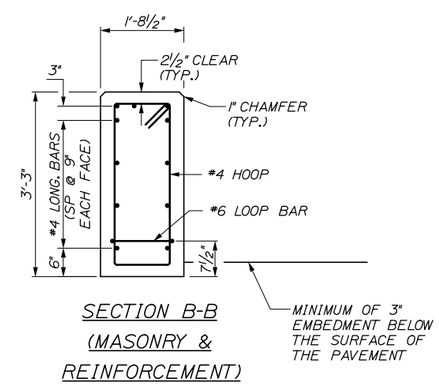

SECTION B-B (MASONRY & REINFORCEMENT)

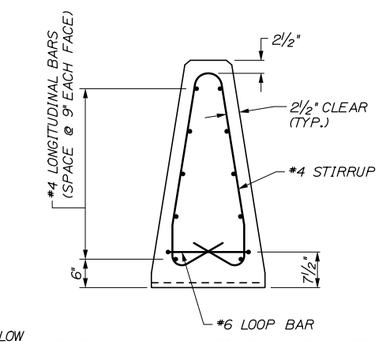

SECTION A-A (REINFORCEMENT)

NOTES:
1. SEE CONCRETE BARRIER DETAILS - 2 FOR NOTES AND BARRIER CONNECTION DETAILS.
2. PREPARATION OF SUBGRADE SHALL BE PERFORMED TO ENSURE PROPER HEIGHT OF CONNECTING GUARDRAIL PRIOR TO PLACING MEDIAN BARRIER TRANSITION.

Date:5/15/2015

Filename: 021_BarrierDet01.dgn

Scale: AS NOTED				Designed by: HNTB						HNTB CORPORATION 340 County Road, Suite 6-C Westbrook, ME 04092 TEL (207) 774-5155 FAX (207) 228-0909	MAINE TURNPIKE THE GOLD STAR MEMORIAL HIGHWAY	FALMOUTH SPUR TOLL PLAZA ORT CONVERSION CONCRETE BARRIER DETAILS - 1 MEDIAN BARRIER TRANSITION TYPE 1
No.	Revision	By	Date	CONSULTANT PROJECT MANAGER: R. Bruce Munger, P.E.							MTA PROJECT MANAGER: William Yates	SHEET NUMBER: BAR-03
					By	Date		By	Date			
				Designed	HME	05/15	Checked	RWH	05/15			
				Drawn	MPC	05/15	In Charge of	RAL	05/15			CONTRACT:2015.13

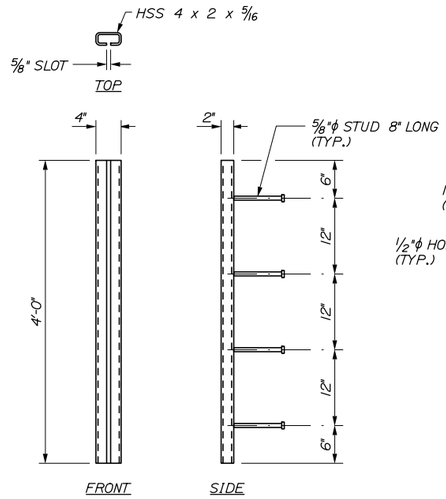

STRUCTURAL TUBE DETAILS

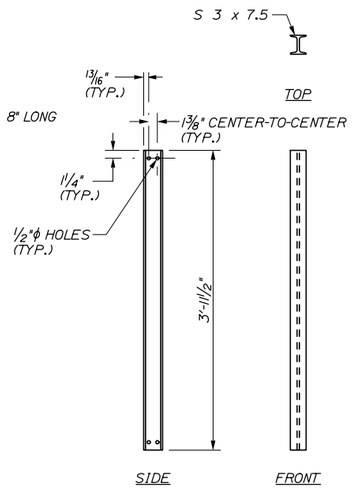

I-BEAM DETAILS

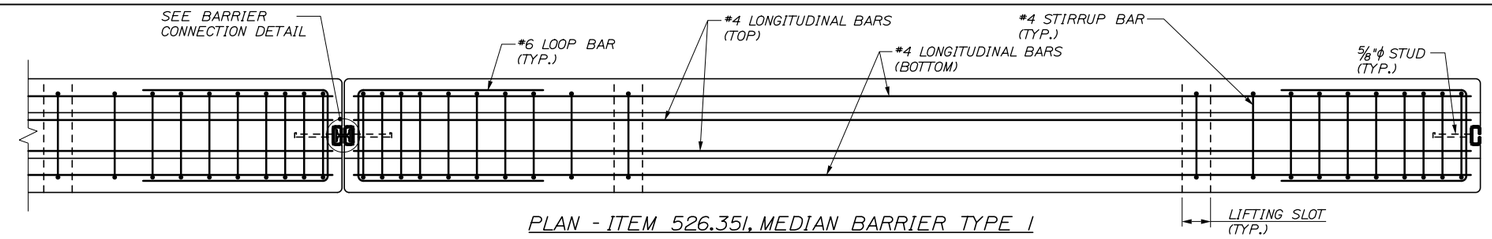

PLAN - ITEM 526.351, MEDIAN BARRIER TYPE I

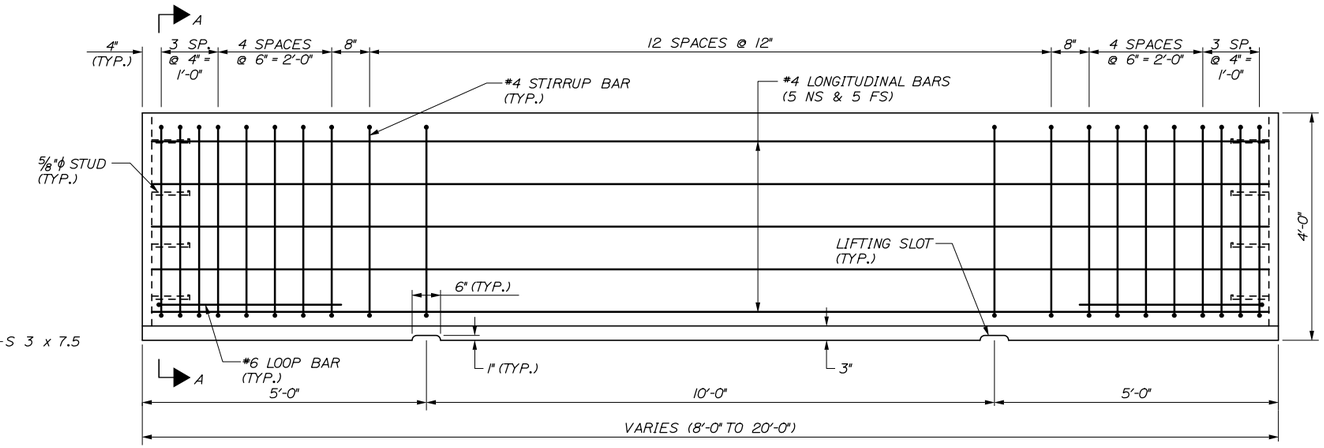

ELEVATION

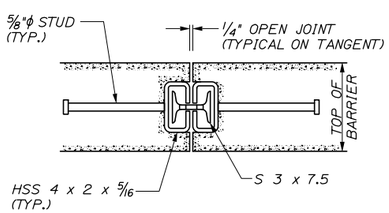

BARRIER CONNECTION DETAIL

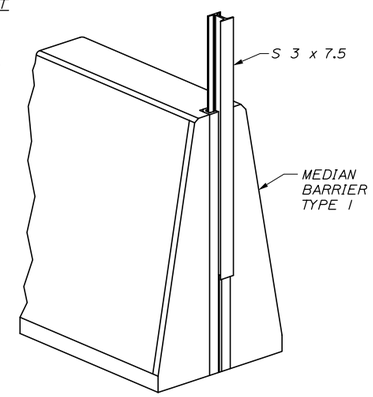

ISOMETRIC VIEW

BARRIER NOTES:

1. THE CONCRETE BARRIER DETAILS, AS SHOWN ON THIS SHEET, ARE IN COMPLIANCE WITH THE REQUIREMENTS OF NCHRP REPORT 350, TL 4.
2. I-BEAMS AND STRUCTURAL TUBES SHALL BE GALVANIZED AFTER FABRICATION.
3. EACH BARRIER UNIT SHALL INCLUDE ONE S 3 x 7.5 AS SHOWN ON THIS PLAN SHEET.
4. SHOP DRAWINGS SHALL INCLUDE REINFORCING SCHEDULE. CONTRACTOR SHALL PROVIDE SHOP DRAWING FOR ANGLE POINTS IN BARRIER.
5. MEDIAN BARRIER SHALL BE PAID FOR UNDER APPROPRIATE 526 ITEMS.
6. THE BARRIERS SHALL BE LIGHT COLORED CLASS "P" CONCRETE HAVING A MINIMUM 28 DAY COMPRESSION STRENGTH OF 4,500 PSI. BARRIERS SHALL HAVE A SMOOTH UNIFORM SURFACE FREE OF DEFECTS AND IRREGULARITIES. CASTING DATE SHALL BE SHOWN ON BARRIER. ALL EXPOSED EDGES OF CONCRETE SHALL BE CHAMFERED 3/4", UNLESS NOTED OTHERWISE.
7. ALL REINFORCING STEEL SHALL BE AASHTO M31 (ASTM-A615) GRADE 60. EPOXY COATED. REINFORCEMENT SHOWN IS THE MINIMUM REQUIRED. EACH BARRIER UNIT SHALL INCLUDE ONE S 3 x 7.5 AS SHOWN ON THIS PLAN SHEET.
8. CLEAR PROTECTIVE COATING FOR CONCRETE SURFACES SHALL BE APPLIED ON-SITE AND APPROVED BY THE RESIDENT. COATING SHALL BE INCIDENTAL TO BARRIER.

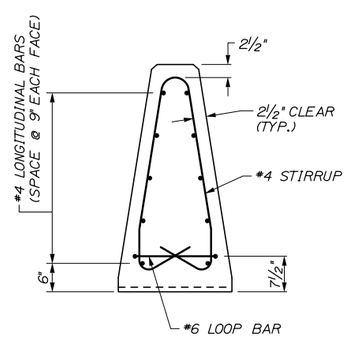

SECTION A-A (REINFORCEMENT)

MEDIAN BARRIER TYPE I REINFORCING SCHEDULE

DESCRIPTION	SIZE	NO.	UNBENT LENGTH	TYPE
LONGITUDINAL (EACH FACE)	#4	10	19'-8"	
STIRRUPS	#4	29	8'-11"	
LOOP BAR	#6	2	7'-11"	

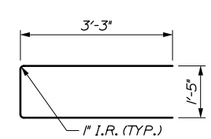

#6 LOOP BAR (TOP VIEW)

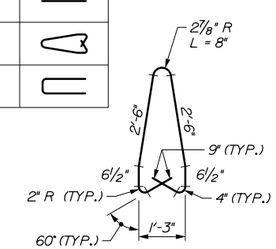

#4 STIRRUP BAR

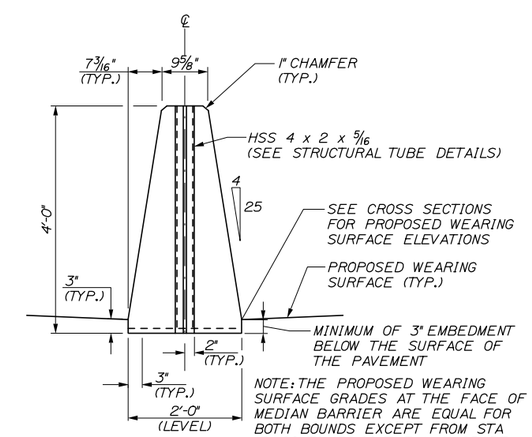

NOTE: THE PROPOSED WEARING SURFACE GRADES AT THE FACE OF MEDIAN BARRIER ARE EQUAL FOR BOTH BOUNDS EXCEPT FROM STA 134+00 TO 138+00. THE MAX GRADE DIFFERENCE IS 1-5/16" AT STA 135+50 TO 136+00

END VIEW (MASONRY)

Date:5/15/2015

Filename: 022_BarrierDet02.dgn

Scale:

No.	Revision	By	Date

Designed by:

HNTB

CONSULTANT PROJECT MANAGER: R. Bruce Munger, P.E.

	By	Date		By	Date
Designed	HME	05/15	Checked	RWH	05/15
Drawn	MPC	05/15	In Charge of	RAL	05/15

HNTB CORPORATION
340 County Road, Suite 6-C
Westbrook, ME 04092
TEL (207) 774-5155
FAX (207) 228-0909

MAINE TURNPIKE

THE GOLD STAR MEMORIAL HIGHWAY

MTA PROJECT MANAGER: William Yates

FALMOUTH SPUR TOLL PLAZA
ORT CONVERSION

CONCRETE BARRIER DETAILS - 2
MEDIAN BARRIER TYPE 1

SHEET NUMBER: BAR-04

CONTRACT:2015.13

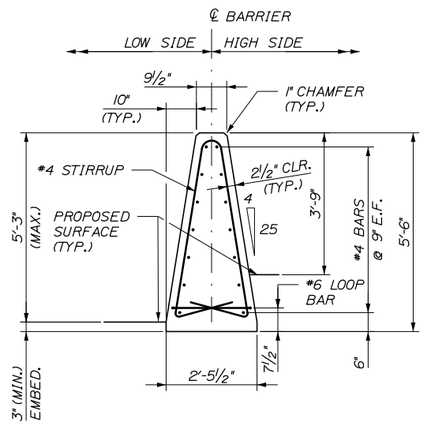

ITEM 526.3511
MEDIAN BARRIER TYPE IA

SCALE: ½" = 1'-0"

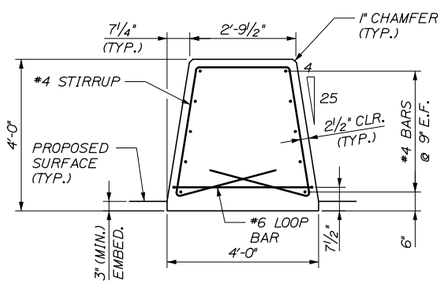

ITEM 526.352
MEDIAN BARRIER TYPE II

SCALE: ½" = 1'-0"

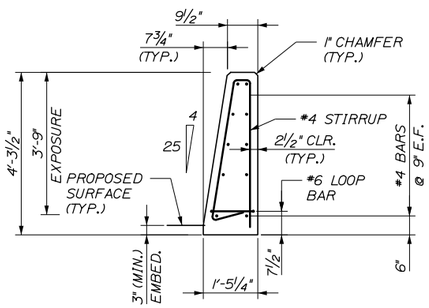

ITEM 526.353
MEDIAN BARRIER TYPE III

SCALE: ½" = 1'-0"

526.351	**MEDIAN BARRIER TYPE I**		
134+20.00, 1.25' LT	TO	140+00.50, 1.25' LT	580.5 LF
140+92.50, 83.25' LT	TO	141+44.96, 83.25' LT	52.5 LF
142+50.50, 1.25' LT	TO	148+30.00, 1.25' LT	579.5 LF
526.3511	**MEDIAN BARRIER TYPE IA**		
137+36.00, 33.14' RT	TO	139+00.00, 31.75' RT	164.00 LF
139+00.00, 31.75' RT	TO	140+54.81, 31.75' RT	154.83 LF
141+28.76, 31.75', RT	TO	143+50.00, 31.75' RT	221.24 LF
143+50.00, 31.75' RT	TO	146.05.00, 33.92' RT	255.00 LF
136+35.00, 35.18' LT	TO	139+00.00, 34.25' LT	265.00 LF
139+00.00, 34.25' LT	TO	141+06.02, 34.25' LT	206.02 LF
141+83.64, 34.25' LT	TO	143+50.00, 34.25' LT	166.37 LF
143+50.00, 34.25' LT	TO	145+04.55, 34.79' LT	154.55 LF
526.3512	**MEDIAN BARRIER TYPE IB**		
140+92.50, 83.25' LT	TO	141+45.00, 83.25' LT	52.5 LF
141+45.00, 83.25' LT	TO	141+52.66, 83.84' LT	7.66 LF
526.352	**MEDIAN BARRIER TYPE II (CAST IN PLACE)**		
140+49.75	TO	140+53.75	4.00 LF
140+83.00	TO	140+87.00	4.00 LF
141+64.00	TO	141+68.00	4.00 LF
141+97.25	TO	142+01.25	4.00 LF
526.3522	**MEDIAN BARRIER TYPE II (PRE-CAST)**		
140+30.50	TO	140+49.75	19.25 LF
140+53.75	TO	140+83.00	29.25 LF
140+87.00	TO	141+64.00	77.00 LF
141+68.00	TO	141+97.25	29.25 LF
142+01.25	TO	142+20.50	19.25 LF
526.353	**MEDIAN BARRIER TYPE III**		
141+06.02, 33.95' LT	TO	141+83.64, 33.95' LT	77.62 LF
140+54.81, 31.45' RT	TO	140+98.50, 31.45' RT	43.69 LF
141+01.50, 31.45' RT	TO	141+28.76, 31.45' RT	27.26 LF
526.361	**MEDIAN BARRIER TRANSITION TYPE I**		
134+00.00, 1.25' LT	TO	134+20.00, 1.25' LT	1 EA
136+15.00, 35.25' LT	TO	136+35.00, 35.18' LT	1 EA
137+16.00, 33.31' RT	TO	137+36.00, 33.14' RT	1 EA
141+44.96, 83.25, LT	TO	141+64.96, 84.79' LT	1 EA
145+04.55, 34.79' LT	TO	145+24.55, 34.86' LT	1 EA
146+05.00, 33.92' RT	TO	146+25.00, 34.09' RT	1 EA
148+30.00, 1.25' LT	TO	148+50.00, 1.25' LT	1 EA
526.362	**MEDIAN BARRIER TRANSITION TYPE II**		
140+00.50, 1.25' LT	TO	140+30.50, 1.25' LT	1 EA
142+20.50, 1.25' LT	TO	142+50.50, 1.25' LT	1 EA

NOTES:

1. SEE CONCRETE BARRIER DETAILS - 2 FOR NOTES AND BARRIER CONNECTION DETAILS.
2. LENGTH OF INDIVIDUAL BARRIER SECTIONS SHALL BE BETWEEN 8'-0" AND 20'-0".
3. SPACING OF #4 STIRRUPS SHALL BE SIMILAR TO SPACING OF MEDIAN BARRIER TYPE I.
4. #6 LOOP BAR SHALL BE SIMILAR TO #6 LOOP BAR OF MEDIAN BARRIER TYPE I.
5. ALL MEDIAN BARRIER BETWEEN CASH AND ORT LANES SHALL HAVE A 1" X 6" LIFTING SLOT THE ENTIRE WIDTH OF BARRIER FROM 5' FROM THE END. SEE MEDIAN BARRIER TYPE I FOR INFORMATION.
6. STATION/OFFSET MEASURED TO CENTER OF BARRIER EXCEPT FOR TYPE III.

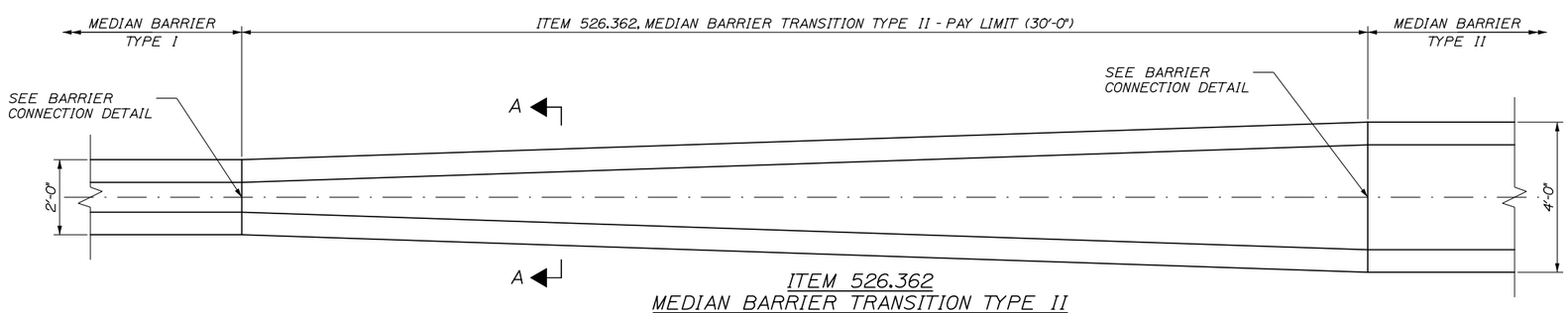

ITEM 526.362
MEDIAN BARRIER TRANSITION TYPE II

SCALE: ½" = 1'-0"

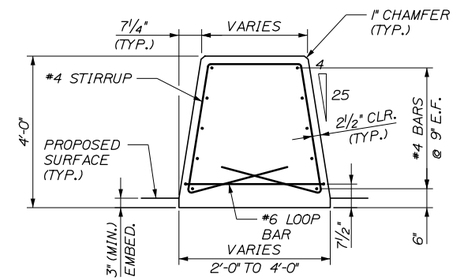

SECTION A-A

SCALE: ½" = 1'-0"

Date:5/15/2015

Filename: 023_BarrierDet03.dgn

Scale:			
No.	Revision	By	Date

Designed by:

HNTB

CONSULTANT PROJECT MANAGER: R. Bruce Munger, P.E.

	By	Date		By	Date
Designed	HME	05/15	Checked	RWH	05/15
Drawn	MPC	05/15	In Charge of	RAL	05/15

HNTB CORPORATION
340 County Road, Suite 6-C
Westbrook, ME 04092
TEL (207) 774-5155
FAX (207) 228-0909

MAINE TURNPIKE

THE GOLD STAR MEMORIAL HIGHWAY

MTA PROJECT MANAGER: William Yates

FALMOUTH SPUR TOLL PLAZA
ORT CONVERSION

CONCRETE BARRIER DETAILS - 3

SHEET NUMBER: BAR-05

CONTRACT:2015.13

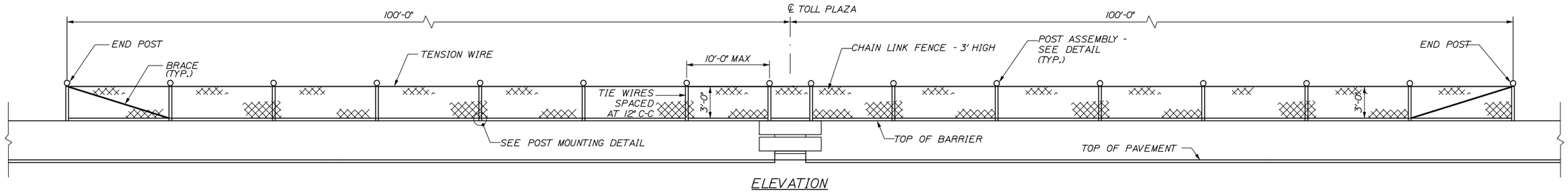

ELEVATION
NOT TO SCALE

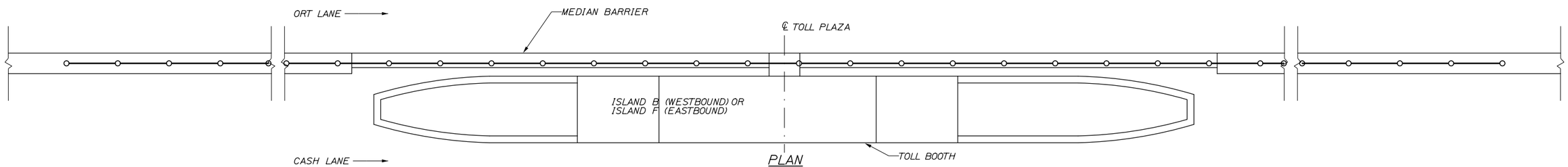

PLAN
NOT TO SCALE
ONLY EB SHOWN
(MIRRORED ABOUT FALMOUTH SPUR ℄ FOR WB)

BARRIER MOUNTED CHAIN LINK FENCE

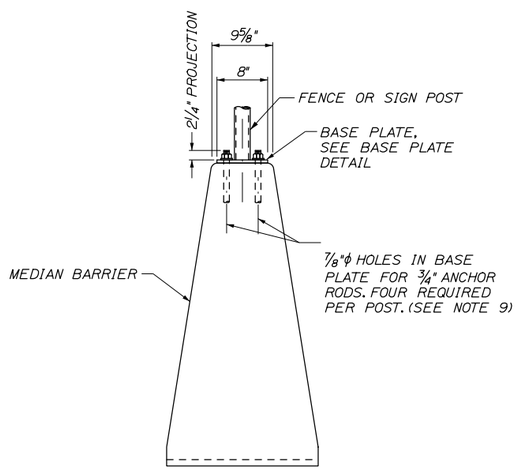

POST MOUNTING DETAIL
1" = 1'-0"

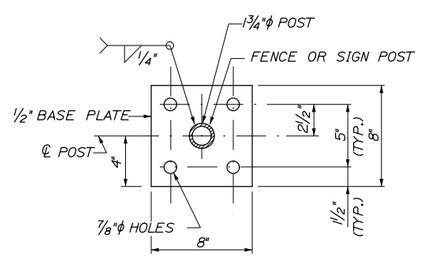

BASE PLATE DETAIL
1" = 2'-0"

POST ASSEMBLY FOR SIGN OR CHAIN LINK FENCE

NOTES:

1. BREAKAWAY POSTS SHALL NOT BE USED FOR BARRIER MOUNTED SIGNS OR FENCE.
2. DRILLING AND GROUTING OF BARRIER, FURNISHING AND INSTALLING OF ANCHOR RODS, AND BASE PLATES SHALL BE SUBSIDIARY TO ITEM 607.41, POST ASSEMBLIES FOR SIGN OR CHAIN LINK FENCE.
3. ANCHOR RODS SHALL BE GROUTED TO BARRIER WITH A MATERIAL LISTED ON THE MAINE DEPARTMENT OF TRANSPORTATION PREQUALIFIED LIST OF CHEMICAL ANCHORING MATERIALS. ANCHOR RODS SHALL MEET THE REQUIREMENTS OF ASTM F1554, GRADE 55 AND BE SWEDGED OR THREADED ON THE EMBEDDED PORTION. THE DEPTH OF EMBEDMENT SHALL BE SUFFICIENT TO DEVELOP THE FULL TENSILE STRENGTH OF THE ANCHOR ROD.
4. BRACING AT ENDS OF FENCE SHALL BE INCIDENTAL TO THE FENCE. TENSION WIRE ALONG THE TOP OF THE FENCE SHALL BE INCIDENTAL TO THE FENCE.
5. SIGNS SHALL BE ANGLED TOWARD TRAFFIC SO THAT NO PORTION OF THE SIGN PROTRUDES BEYOND THE LIMIT OF THE TOP WIDTH OF THE BARRIER.
6. BOTTOM OF SIGN SHALL BE MOUNTED 5'-0" ABOVE THE EDGE OF PAVEMENT ON THE HIGH SIDE.
7. ATTACHMENT OF SIGNS TO POSTS MUST PREVENT ROTATION. HARDWARE SHALL BE GALVANIZED OR STAINLESS STEEL AND WILL BE INCIDENTAL TO THE SIGN. METHOD SHALL BE APPROVED BY RESIDENT.
8. ALL EXPOSED STEEL SHALL BE HOT DIPPED GALVANIZED UNLESS NOTED OTHERWISE.
9. THE POST ANCHOR RODS SHALL BE LOCATED TO AVOID CONFLICTS WITH THE BARRIER REINFORCING STEEL. AT THE CONTRACTOR'S OPTION, ANCHORAGES MAY BE PRECAST IN TO THE BARRIER. DETAILS FOR ANCHORAGES TO BE PRECAST INTO THE BARRIER SHALL BE SUBMITTED TO THE RESIDENT FOR APPROVAL.
10. CHAIN LINK SHALL BE STANDARD 2" MESH NO.9 BARBED FINISH. POSTS SHALL BE HOT DIP GALVANIZED.

Date:5/15/2015

Filename: 024_BarrierFence.dgn

Scale:

No.	Revision	By	Date

Designed by:

HNTB

CONSULTANT PROJECT MANAGER: R. Bruce Munger, P.E.

	By	Date		By	Date
Designed	AMF	05/15	Checked	CRM	05/15
Drawn	CNP	05/15	In Charge of	RAL	05/15

HNTB CORPORATION
340 County Road, Suite 6-C
Westbrook, ME 04092
TEL (207) 774-5155
FAX (207) 228-0909

MAINE TURNPIKE

THE GOLD STAR MEMORIAL HIGHWAY

MTA PROJECT MANAGER: William Yates

FALMOUTH SPUR TOLL PLAZA
ORT CONVERSION

BARRIER MOUNTED
CHAIN LINK FENCE AND SIGN DETAILS

SHEET NUMBER: BAR-06

CONTRACT:2015.13

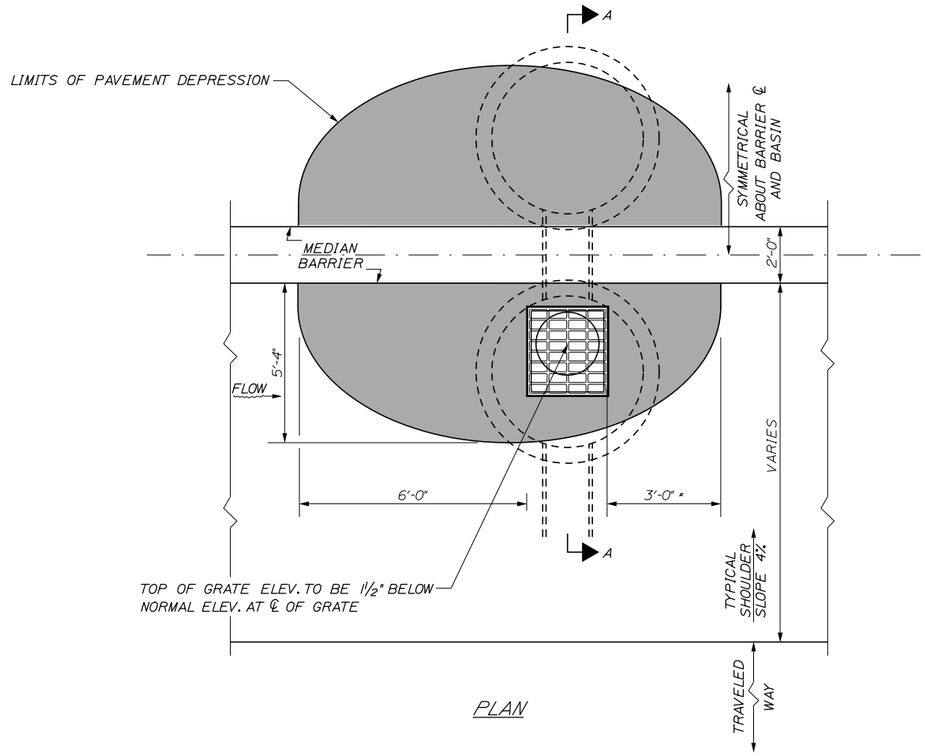

PLAN

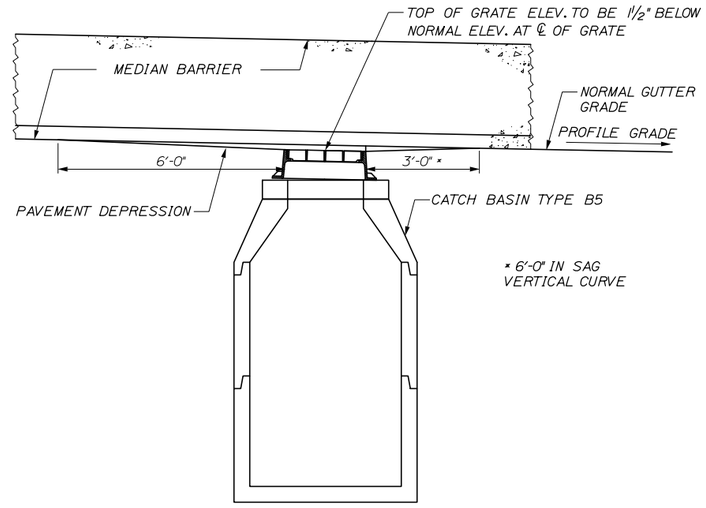

ELEVATION

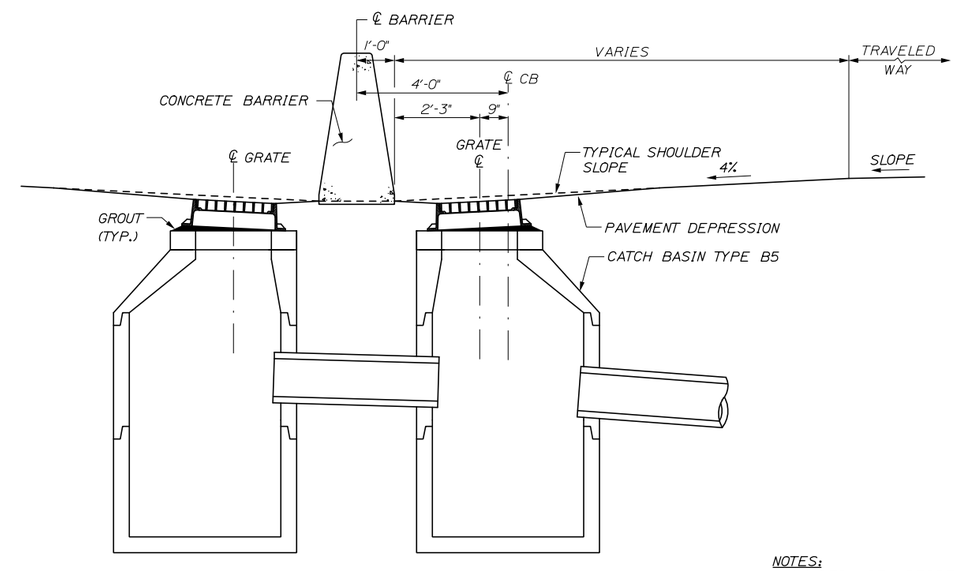

SECTION A-A

PLACEMENT OF DRAINAGE STRUCTURES ALONG BARRIER

NOTES:

1. SHADED AREA REPRESENTS APPROXIMATE LIMITS OF PAVEMENT DEPRESSION.

2. GRATE SHALL BE PLACED 1½" BELOW AND PARALLEL TO THE NORMAL PAVEMENT GRADE.

3. FRESHLY PLACED PAVEMENT SHALL BE REMOVED BEFORE COMPACTING DEPRESSED AREA.

Date:5/15/2015

Filename: 025_MedianDrainage.dgn

Scale:

No.	Revision	By	Date

Designed by:

HNTB

CONSULTANT PROJECT MANAGER: R. Bruce Munger, P.E.

	By	Date		By	Date
Designed	HME	05/15	Checked	-	05/15
Drawn	MPC	05/15	In Charge of	RAL	05/15

HNTB CORPORATION
340 County Road, Suite 6-C
Westbrook, ME 04092
TEL (207) 774-5155
FAX (207) 228-0909

MAINE TURNPIKE

THE GOLD STAR MEMORIAL HIGHWAY

MTA PROJECT MANAGER: William Yates

FALMOUTH SPUR TOLL PLAZA
ORT CONVERSION

DRAINAGE DETAILS

SHEET NUMBER: DET-01

CONTRACT:2015.13

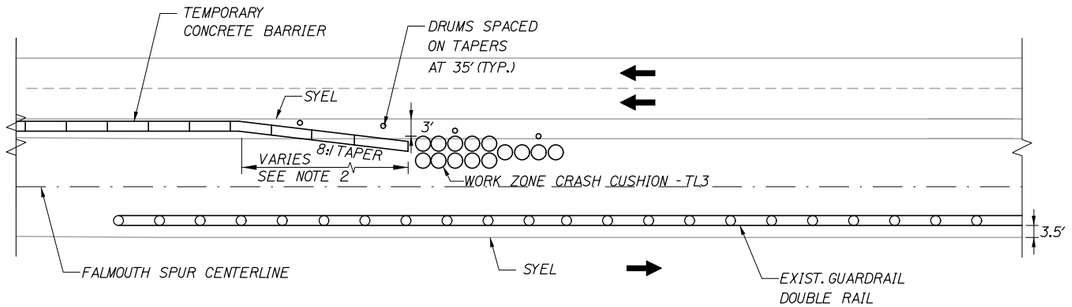

EXIST. GUARDRAIL ON FAR SIDE OF MEDIAN

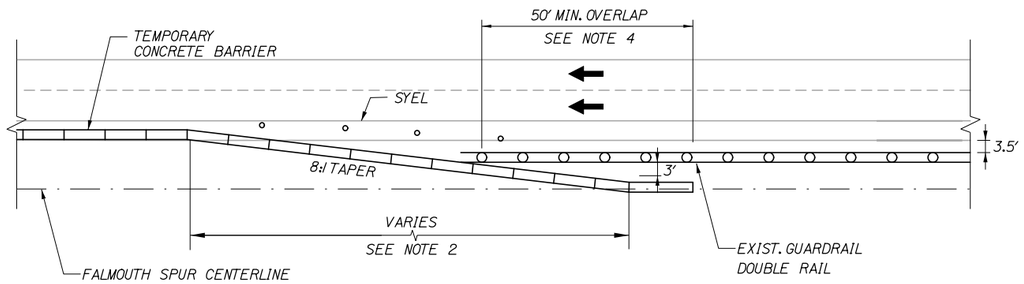

EXIST. GUARDRAIL ON NEAR SIDE OF MEDIAN

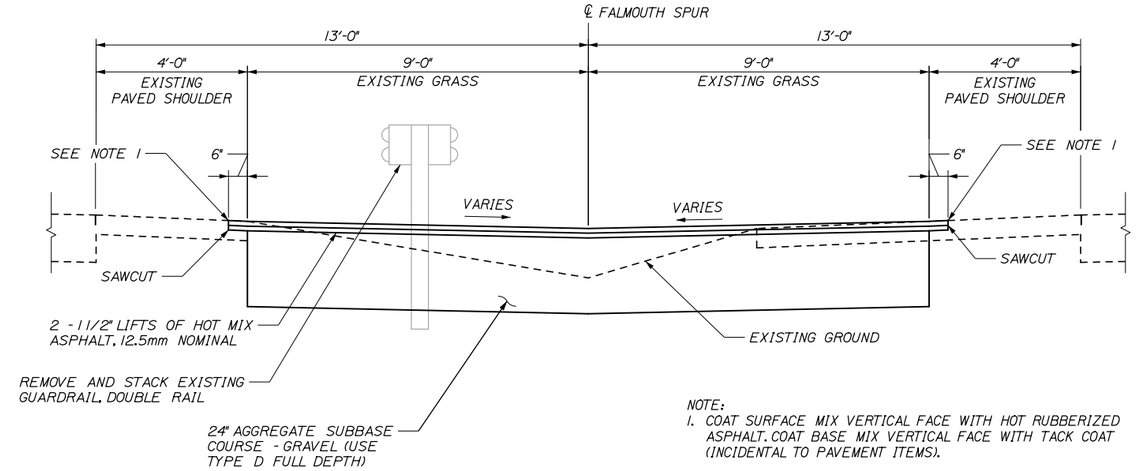

NOTE:
1. COAT SURFACE MIX VERTICAL FACE WITH HOT RUBBERIZED ASPHALT. COAT BASE MIX VERTICAL FACE WITH TACK COAT (INCIDENTAL TO PAVEMENT ITEMS).

MEDIAN CONSTRUCTION DETAILS

NOTES:

1. BARRIER ENDS SHALL BE PROTECTED BY A TEMPORARY WORK ZONE CRASH CUSHION OR LAPPED BEHIND GUARDRAIL.
2. 8:1 TAPERED BARRIER LENGTH IS DEPENDANT ON THE LOCATION OF THE BARRIER RELATIVE TO FALMOUTH SPUR SHOULDERS OR LANES.
3. IF A TEMPORARY WORK ZONE CRASH CUSHION IS USED, THE WORK ZONE CRASH CUSHION SYSTEM MUST BE FOUNDED ON A LEVEL SURFACE. ANY WORK NECESSARY TO PROVIDE A LEVEL SURFACE WILL BE INCIDENTAL TO THE WORK ZONE CRASH CUSHION ITEM.
4. IF THE 50' MIN. LENGTH OF OVERLAP CAN NOT BE MET THEN THE EXISTING GUARDRAIL END MUST BE ANCHORED IN ACCORDANCE WITH DRAWING SEW02a IN THE AASHTO-AGC-ARBTA JOINT COMMITTEE TASK FORCE 13 REPORT, DRAFTED MAY 1995.

CONCRETE BARRIER / GUARDRAIL OVERLAP DETAIL
NOT TO SCALE

TEMPORARY MEDIAN OPENINGS

1. CONTRACTOR SHALL MAINTAIN TWO TEMPORARY OPENINGS IN THE MEDIAN GUARDRAIL TO FACILITATE TESTING OF THE ORT LANES WITH LIVE TRAFFIC. OPENINGS SHALL REMAIN WITHIN THE ADJACENT LANE CLOSURES. OPENINGS SHALL BE 75' LONG. LIMITS ARE FROM STA. 133+25 TO 134+00 AND STA. 148+50 TO STA. 149+25.
2. CONTRACTOR SHALL PROTECT ENDS OF GUARDRAIL. CONTRACTOR SHALL PLAN GUARDRAIL INSTALLATION IN SUCH A MANNER THAT PROPOSED GUARDRAIL WITHIN THE OPENING IS INSTALLED AFTER THE PERIOD NEEDED FOR THE OPENING.
3. SEE SPECIAL PROVISIONS SECTION 107.4.6 PROSECUTION OF WORK FOR DATES REQUIRED TO MAINTAIN OPENING AND MORE INFORMATION.

Date:5/15/2015

Filename: 026_MedianOpening.dgn

Scale:			
No.	Revision	By	Date

Designed by: HNTB

CONSULTANT PROJECT MANAGER: R. Bruce Munger, P.E.

	By	Date		By	Date
Designed	HME	05/15	Checked	-	05/15
Drawn	MPC	05/15	In Charge of	RAL	05/15

HNTB CORPORATION
340 County Road, Suite 6-C
Westbrook, ME 04092
TEL (207) 774-5155
FAX (207) 228-0909

MAINE TURNPIKE

THE GOLD STAR MEMORIAL HIGHWAY

MTA PROJECT MANAGER: William Yates

FALMOUTH SPUR TOLL PLAZA
ORT CONVERSION

MEDIAN CONSTRUCTION DETAILS

SHEET NUMBER: DET-02

CONTRACT:2015.13

DIMENSIONS FOR SLOPE OF 2:1

D	a (FT)	b (FT)	c (FT)	e (FT)	f (FT)	g (FT)	STONE DEPTH (FT)	STONE (CY)
12"	1.00	4.00	3.00	2.00	6.00	1.00	1.50	1.30
15"	1.00	4.50	3.37	2.25	6.75	1.63	1.50	1.70
18"	1.00	5.00	3.75	2.50	7.50	2.25	1.50	2.09
21"	1.00	5.50	4.13	2.75	8.25	2.88	1.50	2.58
24"	1.00	6.00	4.50	3.00	9.00	3.50	1.50	3.12
30"	1.00	7.00	5.25	3.50	10.50	4.75	1.50	4.33
36"	1.00	8.00	6.00	4.00	12.00	6.00	1.50	5.75
42"	1.00	9.00	6.75	4.50	13.50	7.25	1.50	7.37
48"	1.00	10.00	7.50	5.00	15.00	8.50	1.50	9.18
54"	1.00	11.00	8.25	5.50	16.50	9.75	1.50	11.19
60"	1.00	12.00	9.00	6.00	18.00	11.00	1.50	13.40
66"	1.00	13.00	9.75	6.50	19.50	12.25	1.50	15.81
72"	1.00	14.00	10.50	7.00	21.00	13.50	1.50	18.41
84"	1.00	16.00	12.00	8.00	24.00	16.00	1.50	24.22

DIMENSIONS FOR SLOPE OF 4:1

D	a (FT)	b (FT)	c (FT)	e (FT)	f (FT)	g (FT)	STONE DEPTH (FT)	STONE (CY)
12"	1.00	8.00	6.00	2.00	6.00	0.00	1.50	2.20
15"	1.00	9.00	6.75	2.25	6.75	0.00	1.50	2.80
18"	1.00	10.00	7.50	2.50	7.50	0.00	1.50	3.40
21"	1.00	11.00	8.25	2.75	8.25	0.00	1.50	4.10
24"	1.00	12.00	9.00	3.00	9.00	0.00	1.50	4.86
30"	1.00	14.00	10.50	3.50	10.50	0.00	1.50	6.58
36"	1.00	16.00	12.00	4.00	12.00	0.00	1.50	8.56
42"	1.00	18.00	13.50	4.50	13.50	0.50	1.50	10.92
48"	1.00	20.00	15.00	5.00	15.00	1.00	1.50	13.57
54"	1.00	22.00	16.50	5.50	16.50	1.50	1.50	16.50
60"	1.00	24.00	18.00	6.00	18.00	2.00	1.50	19.72
66"	1.00	26.00	19.50	6.50	19.50	2.50	1.50	23.22
72"	1.00	28.00	21.00	7.00	21.00	3.00	1.50	27.01
84"	1.00	32.00	24.00	8.00	24.00	4.00	1.50	35.45

DIMENSIONS FOR SLOPE OF 6:1

D	a (FT)	b (FT)	c (FT)	e (FT)	f (FT)	g (FT)	STONE DEPTH (FT)	STONE (CY)
12"	0.50	9.00	7.50	1.50	4.50	0.00	1.50	2.30
15"	0.50	10.50	8.75	1.75	5.50	0.00	1.50	2.93
18"	0.50	12.00	10.00	2.00	6.50	0.00	1.50	3.57
21"	0.50	13.50	11.25	2.25	7.25	0.00	1.50	4.46
24"	0.50	15.00	12.50	2.50	8.00	0.00	1.50	5.44
30"	0.50	18.00	15.00	3.00	9.50	0.00	1.50	7.71
36"	0.50	21.00	17.50	3.50	11.00	0.00	1.50	10.37
42"	0.50	24.00	20.00	4.00	12.50	0.00	1.50	13.42
48"	0.50	27.00	22.50	4.50	14.00	0.00	1.50	16.87
54"	0.50	30.00	25.00	5.00	15.50	0.00	1.50	20.70
60"	0.50	33.00	27.50	5.50	17.00	0.00	1.50	24.93
66"	0.50	36.00	30.00	6.00	18.50	0.00	1.50	29.55
72"	0.50	39.00	32.50	6.50	20.00	0.00	1.50	34.56
84"	0.50	45.00	37.50	7.50	23.00	0.00	1.50	45.76

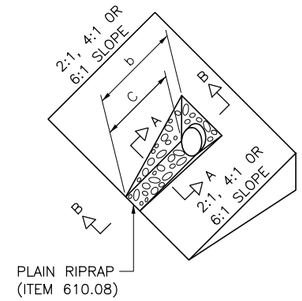

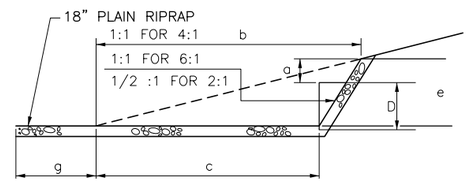

SECTION B-B

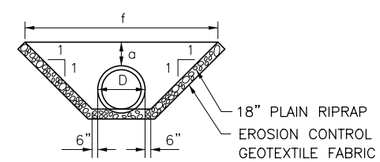

SECTION A-A

ROADWAY CULVERT END SLOPE TREATMENT

NOTES:

1. THE DIMENSIONS SHOWN ARE APPROXIMATE AND MAY BE MODIFIED BY THE RESIDENT.
2. STONE QUANTITIES ARE FOR ONE END OF THE PIPE.

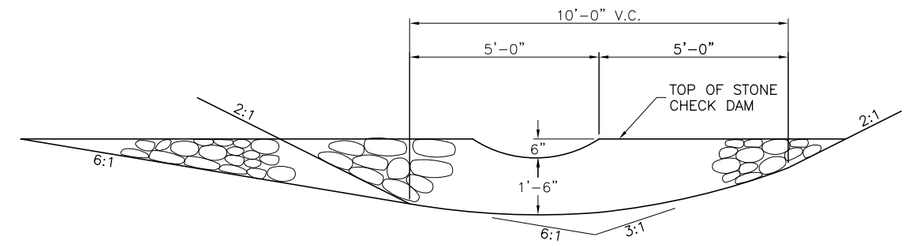

SECTION

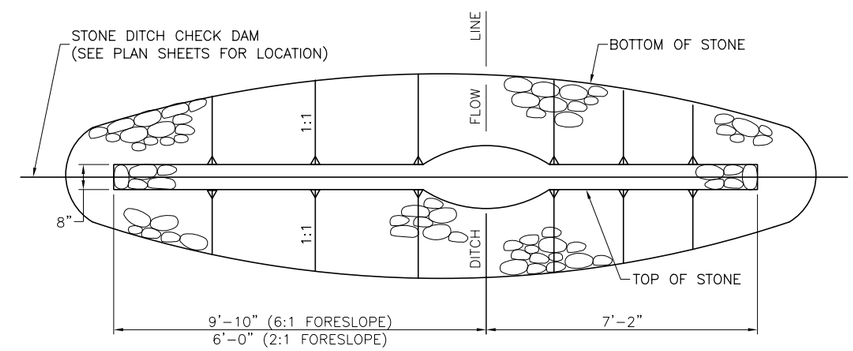

PLAN

STONE CHECK DAM

1" = 2-0"

FORESLOPE	BACKSLOPE	QUANTITY C.Y. STONE
6:1	3:1	2.5
2:1	3:1	2.0

NOTES:

1. STONE FOR TEMPORARY AND PERMANENT STONE CHECK DAMS SHALL MEET THE REQUIREMENTS OF MDOT SPECIFICATION 703.29, STONE DITCH PROTECTION.
2. TEMPORARY STONE CHECK DAMS WILL BE PAID FOR UNDER ITEM 610.181.
3. PERMANENT STONE CHECK DAMS WILL BE PAID FOR UNDER ITEM 610.182.

Date:5/15/2015

Filename: 027_Erosion_Con_Det1.dgn

Scale:

No.	Revision	By	Date

Designed by:

HNTB

CONSULTANT PROJECT MANAGER: R. Bruce Munger, P.E.

	By	Date		By	Date
Designed	HME	05/15	Checked	-	05/15
Drawn	MPC	05/15	In Charge of	RAL	05/15

HNTB CORPORATION
340 County Road, Suite 6-C
Westbrook, ME 04092
TEL (207) 774-5155
FAX (207) 228-0909

MAINE TURNPIKE

THE GOLD STAR MEMORIAL HIGHWAY

MTA PROJECT MANAGER: William Yates

FALMOUTH SPUR TOLL PLAZA
ORT CONVERSION

EROSION CONTROL DETAILS

SHEET NUMBER: DET-03

CONTRACT:2015.13

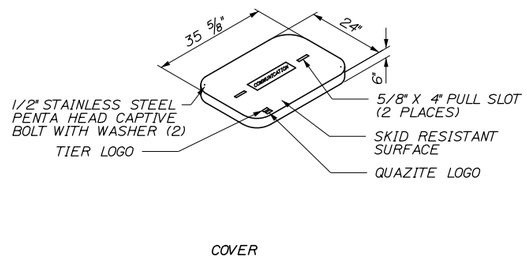

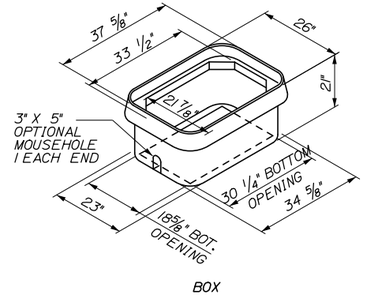

QUAZITE BOX DETAIL

NOT TO SCALE

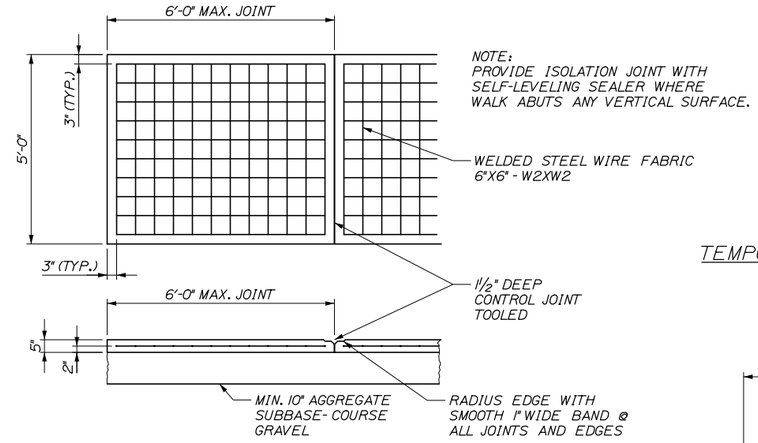

CONCRETE WALK DETAIL

NOT TO SCALE

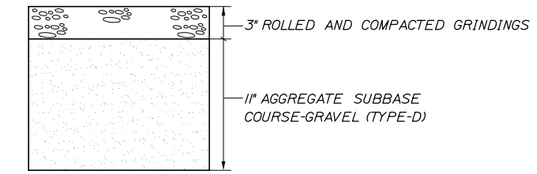

TEMPORARY EMPLOYEE PARKING DETAIL

NOT TO SCALE

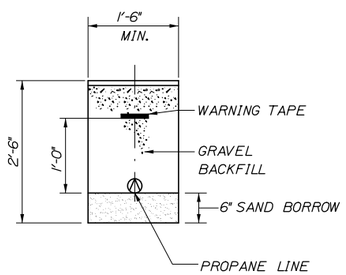

PROPANE SERVICE DETAIL

NOT TO SCALE

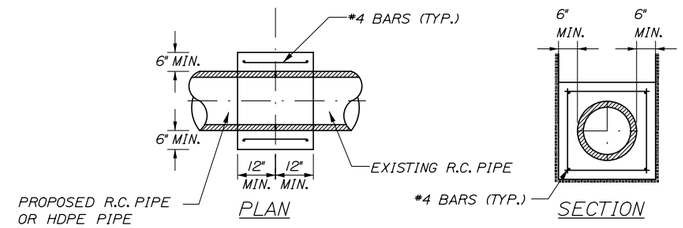

CONCRETE COLLAR

NOT TO SCALE

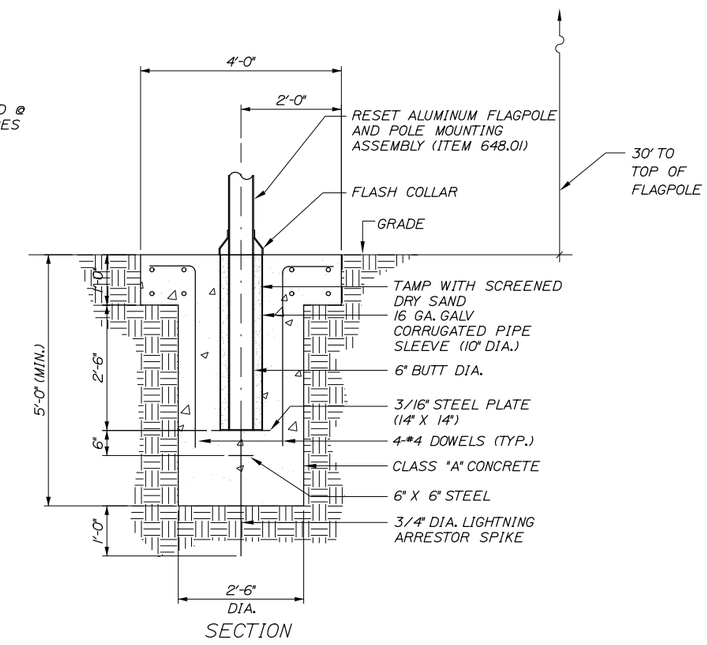

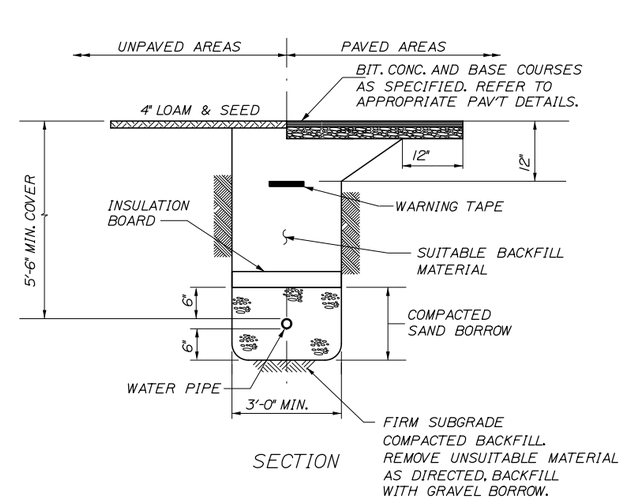

WATER SERVICE DETAIL

NOT TO SCALE

WATER SERVICE NOTES:

1. PROVIDE 7 FOOT COVER WHERE LOCATED UNDER PAVEMENT. IF BEDROCK IS ENCOUNTERED, PROVIDE MINIMUM 1 FOOT SEPARATION AND INSULATE AS NOTED BELOW.
2. BEDDING SHALL BE COMPACTED TO A MINIMUM 95% STANDARD PROCTOR DENSITY.
3. FILTER FABRIC SHALL BE INSTALLED AGAINST THE TRENCH WALLS IN THE HAUNCHING AND BEDDING ZONES WHEN FINE SANDS, SILT, CLAY OR ORGANIC MATERIALS ARE ENCOUNTERED AT THE TRENCH BOTTOM.
4. CONTRACTOR SHALL SHORE TRENCH SIDES WHEN REQUIRED OR AS DIRECTED BY THE RESIDENT.
5. MINIMUM 2" THICK INSULATION SHALL BE INSTALLED WHEN WATER PIPING HAS LESS THAN 5'-6" COVER. MINIMUM 4" THICK INSULATION SHALL BE INSTALLED WHEN WATER PIPING HAS LESS THAN 4'-6" COVER. WHEN CROSSING ABOVE OR BESIDE BASINS, INSULATION SHALL BE INSTALLED UTILIZING THE SAME CRITERIA.

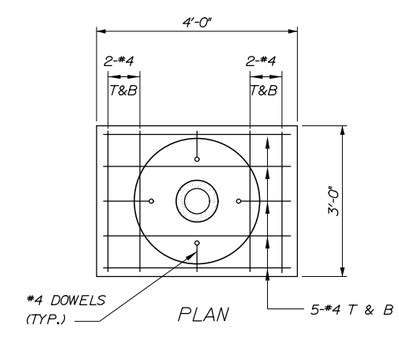

FLAGPOLE FOUNDATION DETAILS

1" = 2'-0"

Date:5/15/2015

Filename: 028_MiscDets1.dgn

Scale:			
No.	Revision	By	Date

Designed by:

HNTB

CONSULTANT PROJECT MANAGER: R. Bruce Munger, P.E.

	By	Date		By	Date
Designed	HME	05/15	Checked	RBM	05/15
Drawn	MPC	05/15	In Charge of	RAL	05/15

HNTB CORPORATION
340 County Road, Suite 6-C
Westbrook, ME 04092
TEL (207) 774-5155
FAX (207) 228-0909

MAINE TURNPIKE

THE GOLD STAR MEMORIAL HIGHWAY

MTA PROJECT MANAGER: William Yates

FALMOUTH SPUR TOLL PLAZA
ORT CONVERSION

MISCELLANEOUS DETAILS

SHEET NUMBER: DET-04

CONTRACT:2015.13

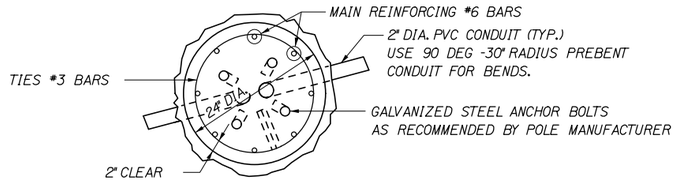

SECTION A-A

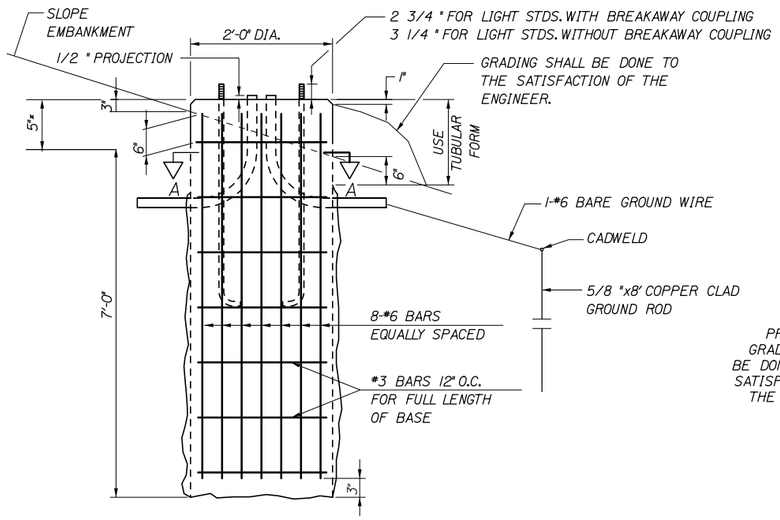

24 INCH FOUNDATION

NOT TO SCALE

NOTE:
WHERE SOLID ROCK IS ENCOUNTERED AT LESS THAN THE REQUIRED DISTANCE BELOW GROUND LEVEL, REINFORCING STEEL SHALL BE DOWELED INTO LEDGE AS SHOWN ON MAINE DOT STANDARD DETAIL 626(06). PAYMENT SHALL BE INCIDENTAL TO THE FOUNDATION PAY ITEM.

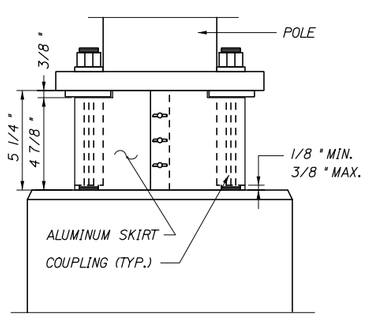

BREAKAWAY COUPLINGS
AND SKIRT DETAIL *

NOT TO SCALE

* BREAKAWAY COUPLINGS SHALL BE REQUIRED ON ALL NEW LIGHT STANDARDS

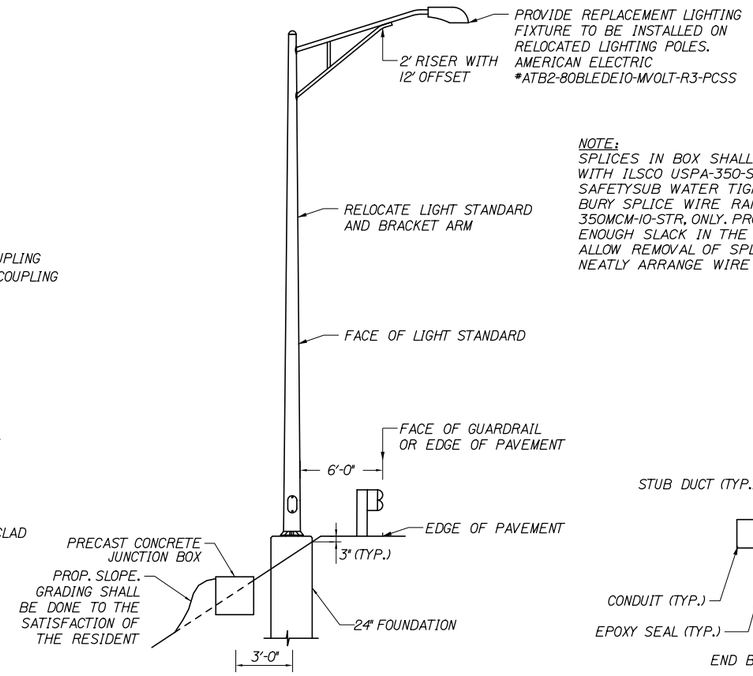

PLACEMENT OF LIGHT STANDARD

NO SCALE

NOTE:
SPLICES IN BOX SHALL BE MADE WITH ILSCO USPA-350-SS-DB SAFETYSUB WATER TIGHT DIRECT BURY SPLICE WIRE RANGE 350MCM-10-STR, ONLY. PROVIDE ENOUGH SLACK IN THE WIRE TO ALLOW REMOVAL OF SPLICES AND NEATLY ARRANGE WIRE IN BOX.

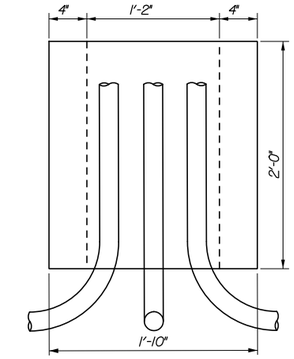

ELEVATION

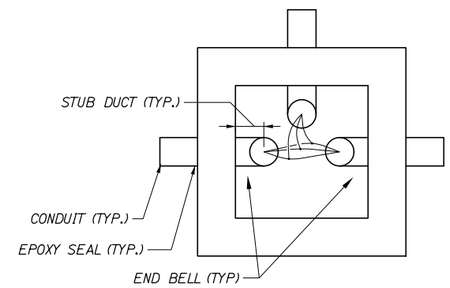

TOP

PRECAST CONCRETE JUNCTION BOX

NOT TO SCALE

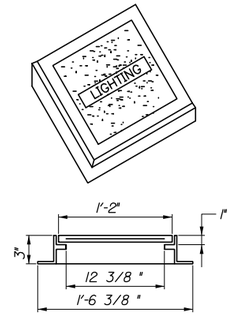

ELECTRICAL PULL BOX COVER

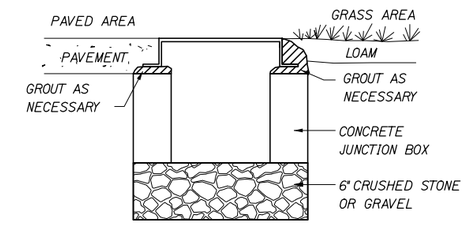

JUNCTION BOX COVER & FRAME

NOTE:
INSTALL JUNCTION BOXES ON GRADE, GROUT AS NECESSARY AS SHOWN ABOVE.

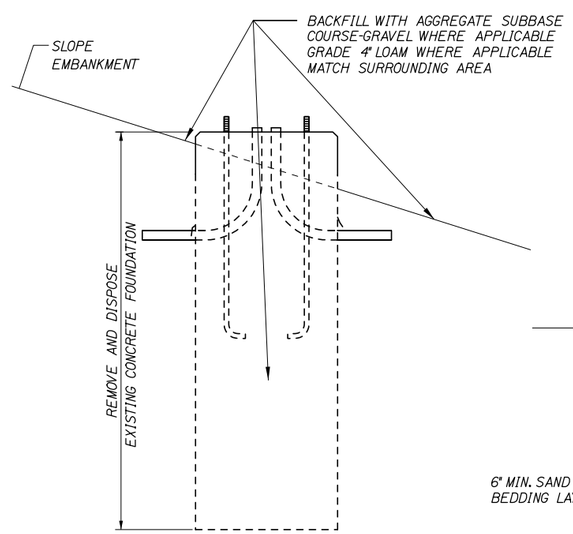

REMOVAL OF CONCRETE FOUNDATION

NOT TO SCALE

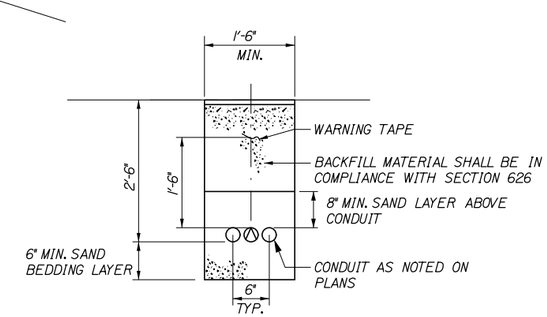

TRENCH CROSS SECTION

NOT TO SCALE

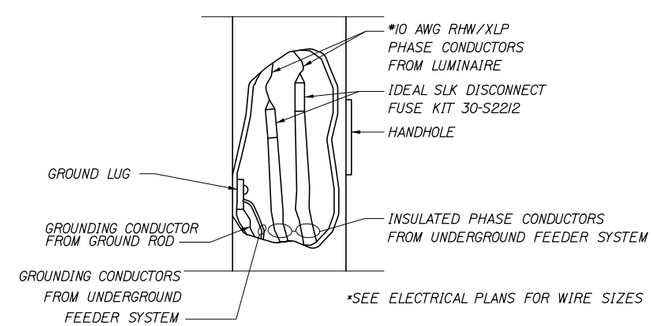

*SEE ELECTRICAL PLANS FOR WIRE SIZES

TYPICAL POLE WIRING DETAIL

NOT TO SCALE

Date:5/15/2015

Filename: 029_LightingDets.dgn

Scale:

No.	Revision	By	Date

Designed by:

HNTB

CONSULTANT PROJECT MANAGER: R. Bruce Munger, P.E.

	By	Date		By	Date
Designed	HME	05/15	Checked	RBM	05/15
Drawn	MPC	05/15	In Charge of	RAL	05/15

HNTB CORPORATION
340 County Road, Suite 6-C
Westbrook, ME 04092
TEL (207) 774-5155
FAX (207) 228-0909

MAINE TURNPIKE

THE GOLD STAR MEMORIAL HIGHWAY

MTA PROJECT MANAGER: William Yates

FALMOUTH SPUR TOLL PLAZA
ORT CONVERSION

LIGHTING DETAILS

SHEET NUMBER: LDET-01

CONTRACT:2015.13

ITEM 656.632 30" TEMPORARY SILT FENCE	LF
STA. 103+62.5, RT TO STA. 112+50.0, RT	887.5
STA. 116+50.0, RT TO STA. 120+50.0, RT	400
STA. 1180+00.0, LT (CULVERT END)	20
STA. 122+25.0, LT AND RT (CULVERT END)	40
STA. 36+00.0, RT (SIGN FOUNDATION)	20

ITEM 606.24 GUARDRAIL TYPE 3D - SINGLE RAIL	LF
STA. 117+74.96, RT TO STA. 120+00.00, RT	225
ITEM 606.80 GUARDRAIL 350 FLEAT TERMINAL	**EA**
STA. 117+37.68, RT.	1
ITEM 205.51 WIDENING OF EXISTING SHOULDER	**LF**
STA. 117+74.96, RT. TO 120+62.46, RT.	237.5
ITEM 606.754 WIDEN SHOULDER FOR GUARDRAIL 350 FLARED TERMINAL	**EA**
STA. 117+37.68, RT.	1
ITEM 606.278 TERMINAL END - ANCHORED END	**EA**
STA. 120+00.00, RT.	1

ITEM 610.08 PLAIN RIPRAP	CY
STA. 117+89.16, RT.	2.20
STA. 118+00.10, LT.	6.60
STA. 118+00.90, RT.	6.60
STA. 122+25.00, LT.	4.90
STA. 122+25.00, RT.	4.90
STA. 126+12.37, RT.	2.20
ITEM 620.58 EROSION CONTROL GEOTEXTILE	**SY**
STA. 117+89.16, RT.	5.40
STA. 118+00.10, LT.	16.40
STA. 118+00.90, RT.	16.40
STA. 122+25.00, LT.	12.00
STA. 122+25.00, RT.	12.00
STA. 126+12.37, RT.	5.40

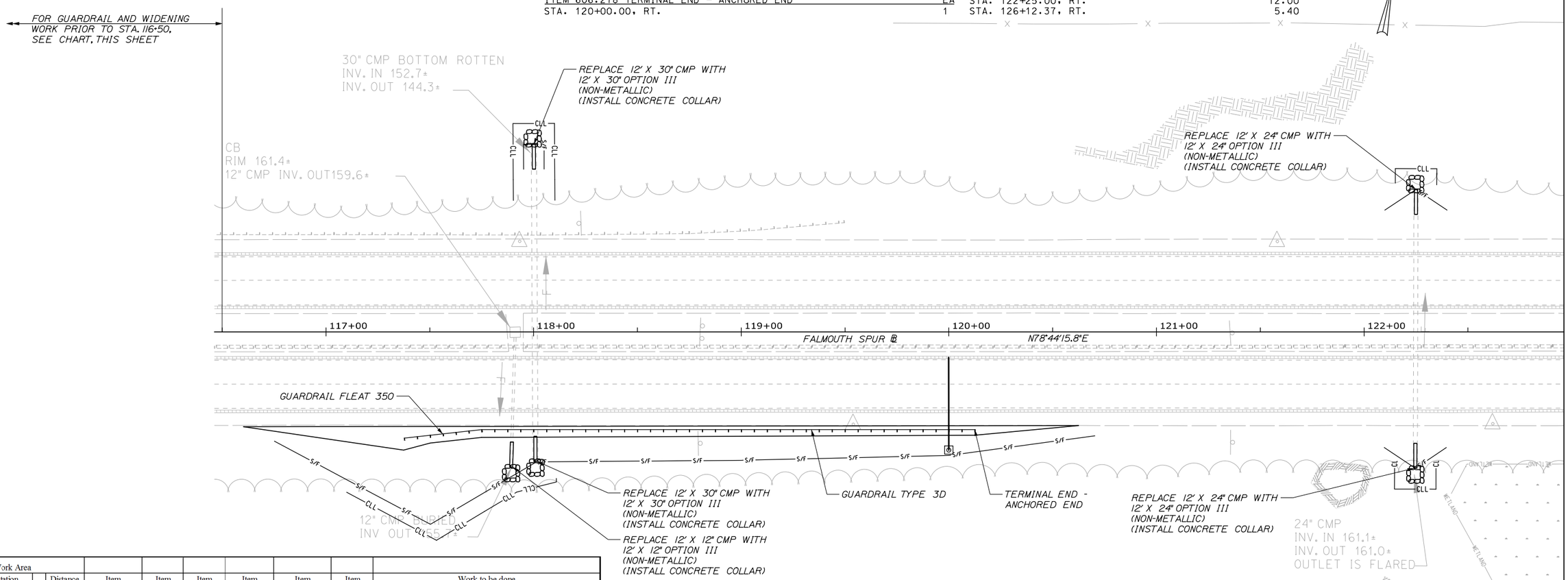

Work Area Station		Station		Distance	Item 205.51 Widening of Existing Shoulder	Item 606.24 Guardrail Type 3d - Single Rail	Item 606.278 Terminal End - Anchored End	Item 606.3631 Guardrail - Remove and Dispose	Item 606.754 Widen Shoulder for Guardrail 350 Flared Terminal	Item 606.80 Guardrail 350 FLEAT Terminal	Work to be done
EB Right Shoulder Work											
103+62.5	to	112+50.0		887.5	887.5	887.5		110.0			Widen Exising shoulder from 103+62.5 to 112+50, Remove and dispose trailing end at 103+62, twisted end at 111+40 and existing rail to station 112+50, install new 3D single rail connecting the 2 exising guardrail runs
WB Right Shoulder Work											
178+37.5	to	172+12.5		625.0	625.0	625.0	1.0		1	1	Install new Type 3D rail run after widening the existing shoulder for the rail and the FLEAT. Install Fleat head at station 178+75.
				Total	**1512.5**	**1512.5**	**1.0**	**110.0**	**1**	**1**	
					LF	**LF**	**EA**	**LF**	**EA**	**EA**	

Date:5/15/2015

Filename: 030_HDPlan1.dgn

Scale: 25 0 25 50
SCALE IN FEET

No.	Revision	By	Date

Designed by:

HNTB

CONSULTANT PROJECT MANAGER: R. Bruce Munger, P.E.

	By	Date		By	Date
Designed	HME	05/15	Checked	RBM	05/15
Drawn	TJW	05/15	In Charge of	RAL	05/15

HNTB CORPORATION
340 County Road, Suite 6-C
Westbrook, ME 04092
TEL (207) 774-5155
FAX (207) 228-0909

MAINE TURNPIKE

THE GOLD STAR MEMORIAL HIGHWAY

MTA PROJECT MANAGER: William Yates

FALMOUTH SPUR TOLL PLAZA
ORT CONVERSION

GENERAL PLAN 1

SHEET NUMBER: GP-01

CONTRACT:2015.13

ITEM 656.632 30" TEMPORARY SILT FENCE	LF
STA. 126+00.0, RT (CULVERT END)	20
STA. 127+38.0, LT (SIGN FOUNDATION)	20

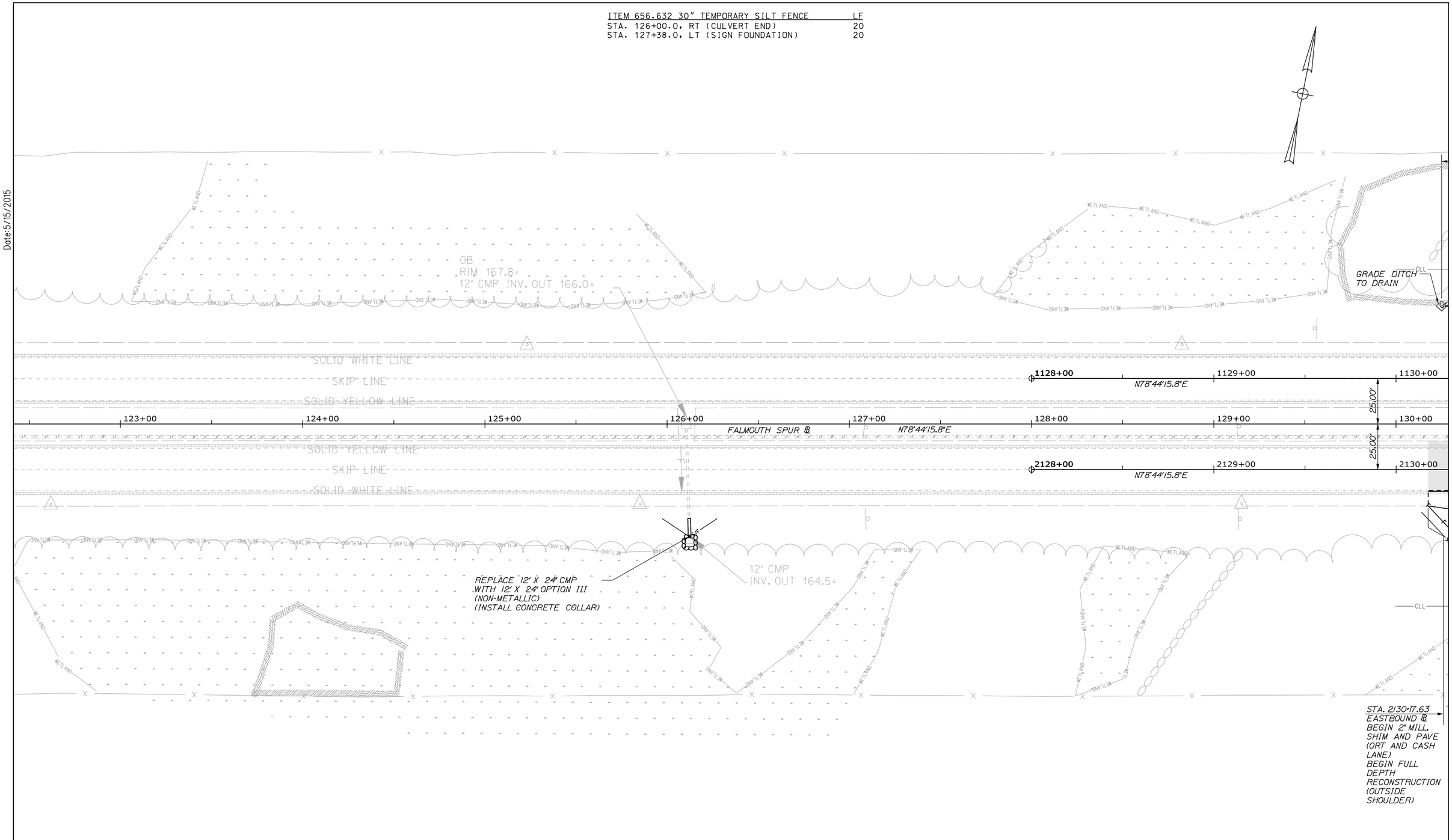

Date:5/15/2015

Filename: 031_HDPlan2.dgn

Scale: 25 0 25 50
SCALE IN FEET

No.	Revision	By	Date

Designed by:

HNTB

CONSULTANT PROJECT MANAGER: R. Bruce Munger, P.E.

	By	Date		By	Date
Designed	HME	05/15	Checked	RBM	05/15
Drawn	TJW	05/15	In Charge of	RAL	05/15

HNTB CORPORATION
340 County Road, Suite 6-C
Westbrook, ME 04092
TEL (207) 774-5155
FAX (207) 228-0909

MAINE TURNPIKE

THE GOLD STAR MEMORIAL HIGHWAY

MTA PROJECT MANAGER: William Yates

FALMOUTH SPUR TOLL PLAZA
ORT CONVERSION

GENERAL PLAN 2

SHEET NUMBER: GP-02

CONTRACT:2015.13

ITEM 606.24 GUARDRAIL TYPE 3D - SINGLE	LF
STA. 131+25.00, RT TO STA. 132+50.00, RT	125

ITEM 606.3605 GUARDRAIL TYPE 3D - REMOVE MODIFY RESET SINGLE	LF
STA. 132+37.50, RT TO STA. 132+62.50, RT (DOUBLE POST)	25

ITEM 606.3606 GUARDRAIL TYPE 3D - REMOVE MODIFY RESET DOUBLE	LF
STA. 132+00.00, RT TO STA. 132+37.50, RT (DOUBLE POST)	37.5

ITEM 606.278 TERMINAL END - ANCHORED END	EA
STA. 132+50.00, RT.	1
STA. 132+62.50, RT.	1

ITEM 606.65 GUARDRAIL THRIE BEAM - SINGLE RAIL	LF
STA. 132+37.50, LT TO STA. 132+63.31, LT	25

ITEM 606.64 GUARDRAIL THRIE BEAM - DOUBLE RAIL	EA
STA. 132+63.31, LT. TO STA. 133+75.48, LT.	50

ITEM 606.279 TERMINAL END - THRIE BEAM	EA
STA. 132+25.00, LT.	1

ITEM 527.306 CENTER BARRIER CRASH ATTENUATOR	EA
STA. 136+89.98, RT.	1

ITEM 656.632 30" TEMPORARY SILT FENCE	LF
STA. 130+00.0, RT TO STA. 140+00.0, RT	1000
STA. 131+75.0, LT TO STA. 133+50.0, LT	175
STA. 133+90.0, LT TO STA. 134+10.0, LT	20
STA. 135+25.0, LT TO STA. 140+50.0, LT	525

ITEM 606.80 GUARDRAIL 350 FLEAT TERMINAL	EA
STA. 130+87.48, RT.	1

ITEM 610.18 STONE DITCH PROTECTION	CY
STA. 132+89.55, RT.	2
STA. 136+14.95, LT.	5
STA. 137+15.98, RT.	3

ITEM 620.58 EROSION CONTROL GEOTEXTILE	SY
STA. 132+89.55, RT.	6
STA. 136+14.95, LT.	16
STA. 137+15.98, RT.	9

ITEM 606.1724 BRIDGE TRANSITION TYPE III - MODIFIED	EA
STA. 133+75.48, LT.	2

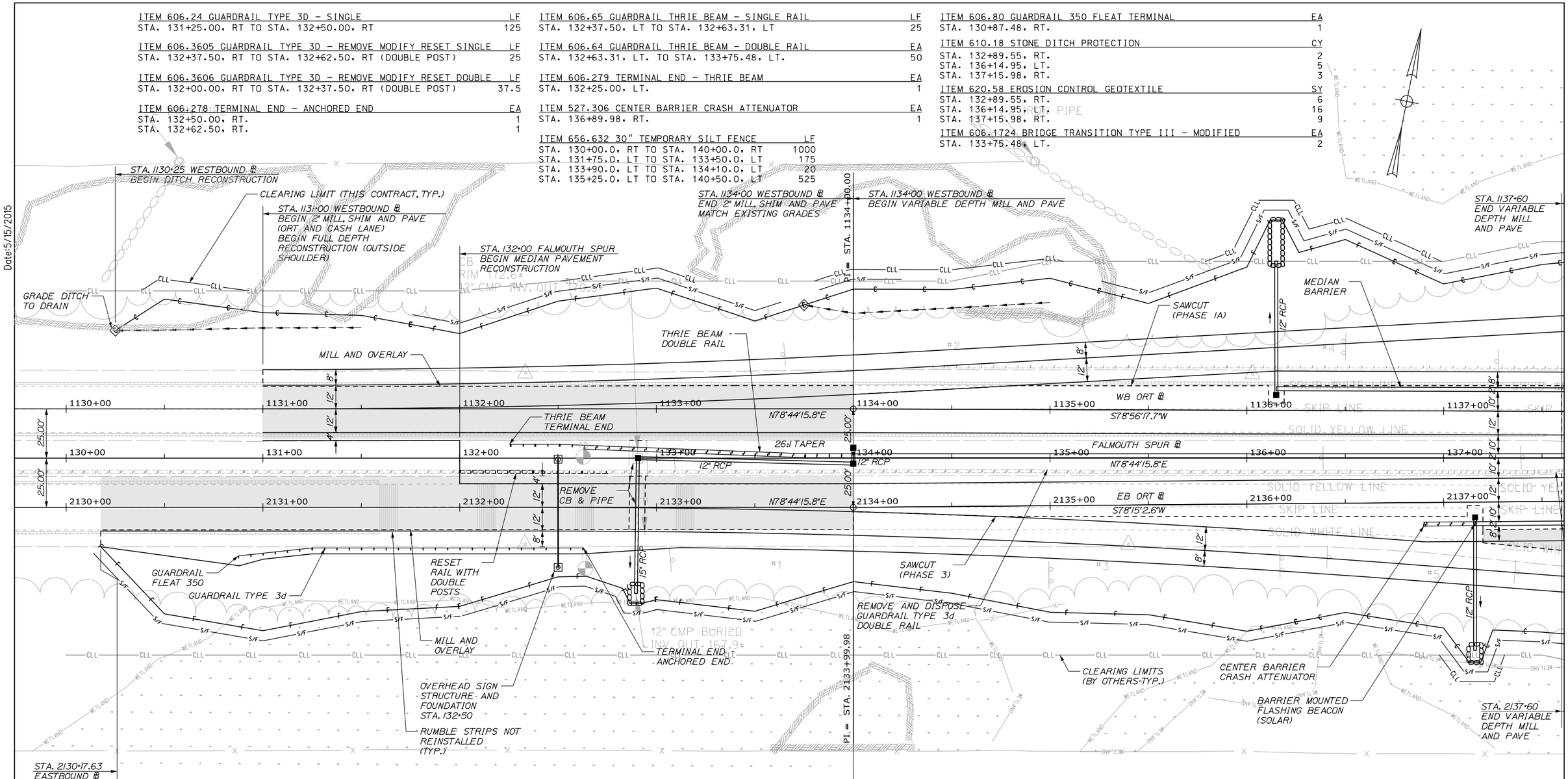

NOTES:
1. INSTALL DOUBLE POSTS, STA 132+00 RT TO 132+62.5 RT. PAY UNDER ITEM 606.48 - SINGLE STEEL GALVANIZED POST.
2. SEE CONCRETE BARRIER DETAILS FOR MEDIAN BARRIER PLAN NOTES.

CONTROL NOTES:
STA. 131+00.00 FALMOUTH SPUR ⓡ =
N 327831.4259
E 2928525.5508

STA. 152+00.00 FALMOUTH SPUR ⓡ =
N 328241.5567
E 2930585.1121

LEGEND
◇ TEMP STONE CHECK DAMS
—CLL— CLEARING LIMIT LINE BY CONTRACTOR
—CLL— CLEARING LIMIT LINE PREVIOUSLY DONE BY OWNER
2" PAVEMENT MILL AND FILL

Scale: 25 0 25 50
SCALE IN FEET

No.	Revision	By	Date

Designed by:

HNTB

CONSULTANT PROJECT MANAGER: R. Bruce Munger, P.E.

	By	Date		By	Date
Designed	HME	05/15	Checked	RBM	05/15
Drawn	TJW	05/15	In Charge of	RAL	05/15

HNTB CORPORATION
340 County Road, Suite 6-C
Westbrook, ME 04092
TEL (207) 774-5155
FAX (207) 228-0909

MAINE TURNPIKE

THE GOLD STAR MEMORIAL HIGHWAY

MTA PROJECT MANAGER: William Yates

FALMOUTH SPUR TOLL PLAZA ORT CONVERSION

GENERAL PLAN 3

SHEET NUMBER: GP-03

CONTRACT:2015.13

Date:5/15/2015

Filename: 032_HDPlan3.dgn

ITEM 610.08 PLAIN RIPRAP	CY
STA. 139+05.32, LT.	4
STA. 139+05.32, RT.	4
STA. 139+50.00, LT.	16
ITEM 610.18 STONE DITCH PROTECTION	**CY**
STA. 138+36.60, RT	4

ITEM 606.24 GUARDRAIL TYPE 3D - SINGLE RAIL	LF
STA. 139+56.78, LT TO STA. 140+31.78, LT	75
STA. 141+89.34, LT TO STA. 142+01.80, LT	12.5
ITEM 620.58 EROSION CONTROL GEOTEXTILE	**SY**
STA. 138+36.60, RT.	11
STA. 139+05.32, LT.	9
STA. 139+05.32, RT.	9
STA. 139+50.00, LT.	44

ITEM 606.80 GUARDRAIL 350 FLEAT TERMINAL	EA
STA. 142+01.80, LT.	1
ITEM 606.265 TERMINAL END - SINGLE RAIL	**EA**
STA. 139+44.28, LT.	1
STA. 140+31.78, LT.	1
ITEM 606.1723 BRIDGE TRANSITION TYPE III	**EA**
STA. 141+64.94, LT.	1
ITEM 656.632 30" TEMPORARY SILT FENCE	**LF**
STA. 141+25.0, LT TO STA. 143+75.0, LT	250

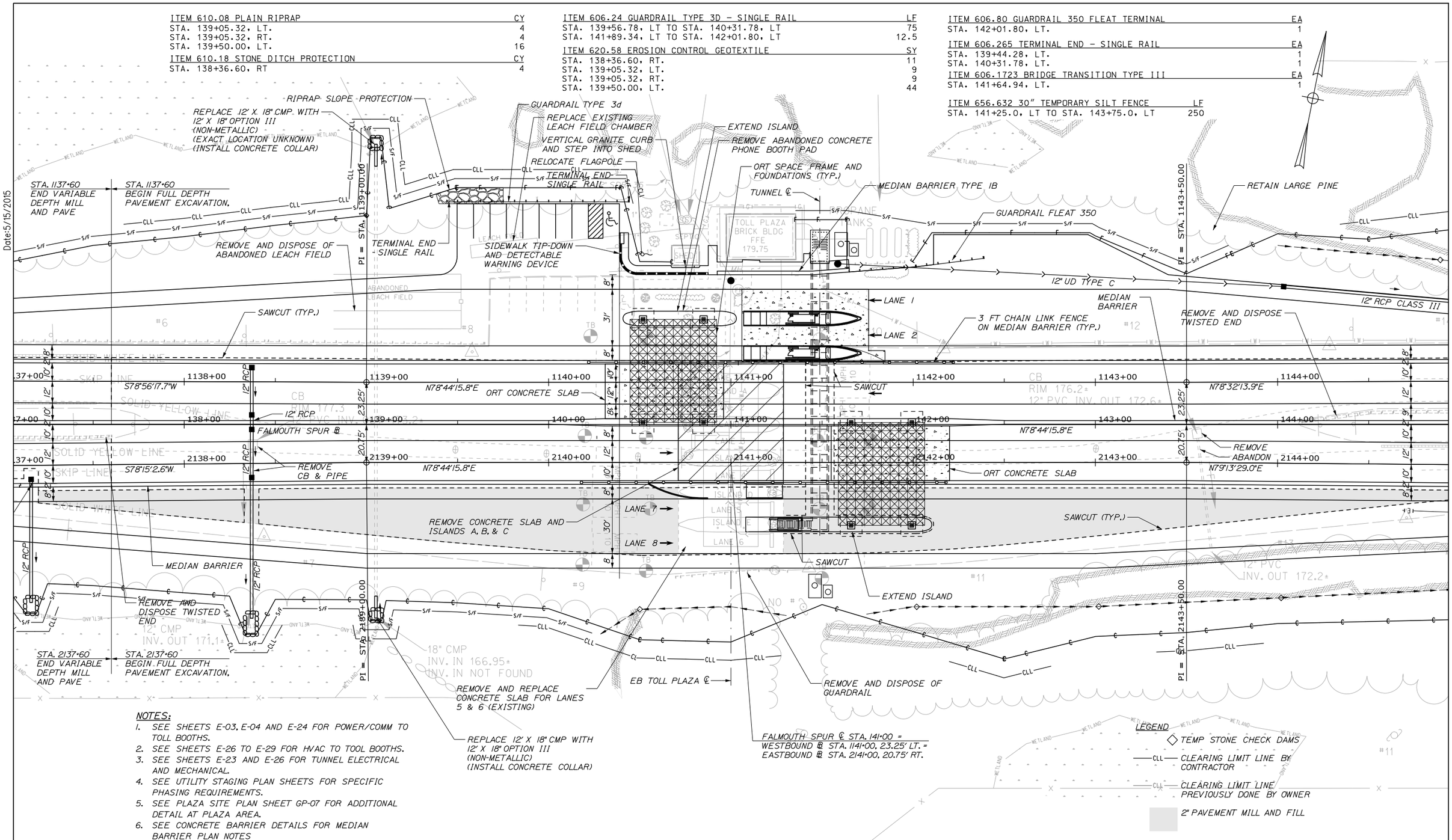

NOTES:

1. SEE SHEETS E-03, E-04 AND E-24 FOR POWER/COMM TO TOLL BOOTHS.
2. SEE SHEETS E-26 TO E-29 FOR HVAC TO TOOL BOOTHS.
3. SEE SHEETS E-23 AND E-26 FOR TUNNEL ELECTRICAL AND MECHANICAL.
4. SEE UTILITY STAGING PLAN SHEETS FOR SPECIFIC PHASING REQUIREMENTS.
5. SEE PLAZA SITE PLAN SHEET GP-07 FOR ADDITIONAL DETAIL AT PLAZA AREA.
6. SEE CONCRETE BARRIER DETAILS FOR MEDIAN BARRIER PLAN NOTES

Scale: 25 0 25 50
SCALE IN FEET

No.	Revision	By	Date

Designed by: HNTB

CONSULTANT PROJECT MANAGER: R. Bruce Munger, P.E.

	By	Date		By	Date
Designed	HME	05/15	Checked	RBM	05/15
Drawn	TJW	05/15	In Charge of	RAL	05/15

HNTB CORPORATION
340 County Road, Suite 6-C
Westbrook, ME 04092
TEL (207) 774-5155
FAX (207) 228-0909

MAINE TURNPIKE

THE GOLD STAR MEMORIAL HIGHWAY

MTA PROJECT MANAGER: William Yates

FALMOUTH SPUR TOLL PLAZA ORT CONVERSION

GENERAL PLAN 4

SHEET NUMBER: GP-04

CONTRACT:2015.13

Date:5/15/2015

Filename: 033_HDPlan4.dgn

ITEM 606.3605 GUARDRAIL TYPE 3D - REMOVE MODIFY RESET SINGLE	LF
STA. 150+37.50, LT TO STA. 150+50.00, LT	12.5
STA. 150+50.00, LT TO STA. 150+75.00, LT (DOUBLE POST)	25

ITEM 606.278 TERMINAL END - SINGLE RAIL	EA
STA. 150+25.00, LT.	1
STA. 150+37.50, LT.	1

ITEM 606.80 GUARDRAIL 350 FLEAT TERMINAL	EA
STA. 151+21.74, RT.	1

ITEM 606.24 GUARDRAIL TYPE 3D - SINGLE RAIL	LF
STA. 151+59.15, RT TO STA. 152+09.15,RT.	50

ITEM 606.65 GUARDRAIL THRIE BEAM - SINGLE RAIL	LF
STA. 150+41.77, RT TO STA. 150+61.77, RT	25

ITEM 606.64 GUARDRAIL THRIE BEAM - DOUBLE RAIL	EA
STA. 148+74.40, LT. TO STA. 150+41.77, RT.	167.5

ITEM 606.279 TERMINAL END - THRIE BEAM	EA
STA. 150+61.77, RT.	1

ITEM 527.306 CENTER BARRIER CRASH ATTENUATOR	EA
STA. 145+24.55, RT.	1

ITEM 656.632 30" TEMPORARY SILT FENCE	LF
STA. 150+50.0, RT TO STA. 152+00.0, RT	150
STA. 150+75.0, LT TO STA. 160+00.0, LT	925
STA. 150+50.0, MEDIAN (SIGN FOUNDATION)	20

ITEM 610.08 PLAIN RIPRAP	CY
STA. 145+24.63, LT.	2.20
STA. 146+25.00, RT.	2.20
STA. 146+89.59, RT.	2.20
STA. 147+00.00, LT.	2.20

ITEM 620.58 EROSION CONTROL GEOTEXTILE	SY
STA. 145+24.63, LT.	5.33
STA. 146+25.00, RT.	5.33
STA. 146+89.59, RT.	5.33
STA. 147+00.00, LT.	5.33

ITEM 606.1724 BRIDGE TRANSITION TYPE III - MODIFIED	EA
STA. 148+50.00, LT.	2

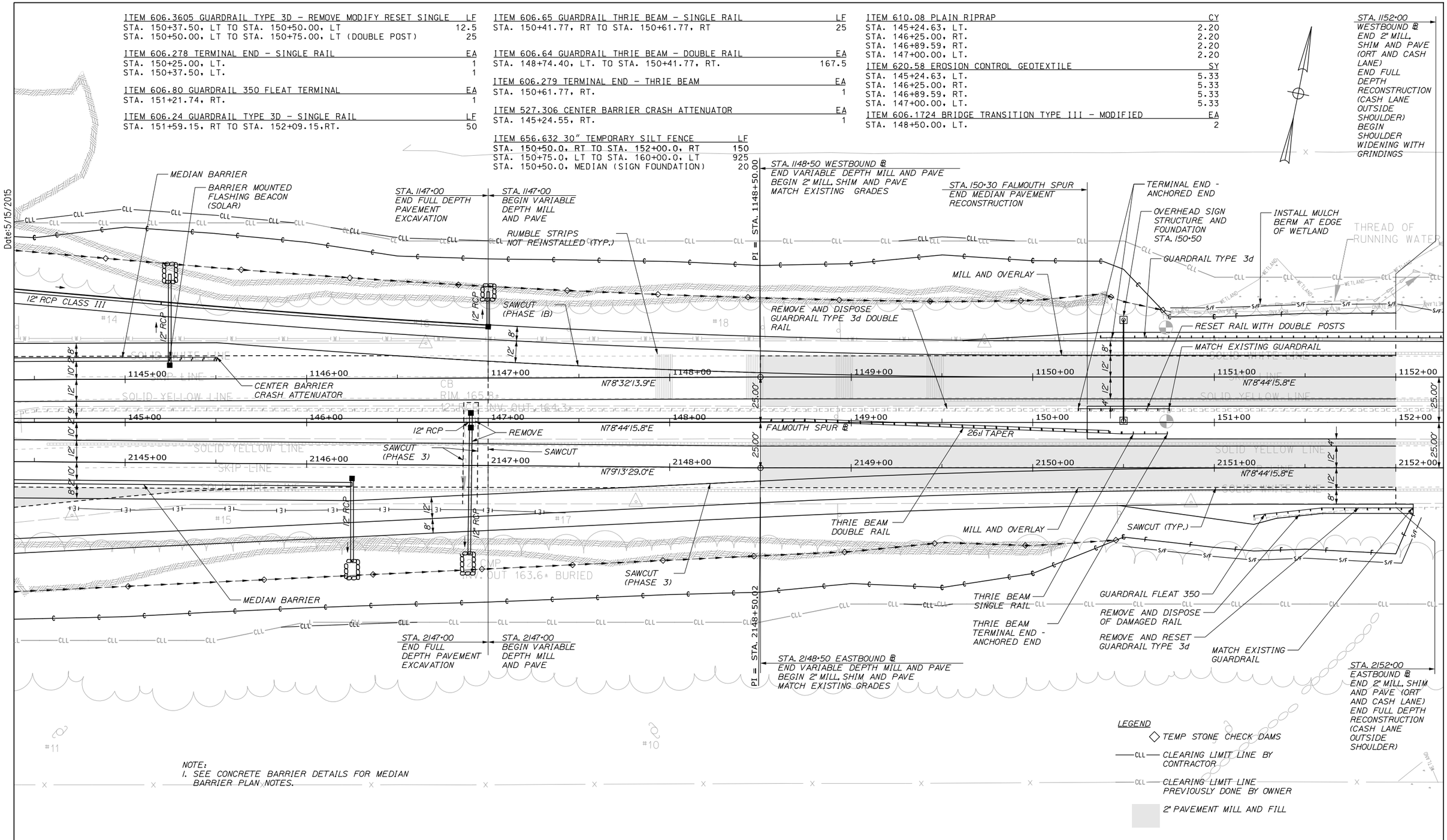

NOTE:
1. SEE CONCRETE BARRIER DETAILS FOR MEDIAN BARRIER PLAN NOTES.

Date:5/15/2015

Filename: 034_HDPlan5.dgn

Scale: 25 0 25 50
SCALE IN FEET

No.	Revision	By	Date

Designed by:

HNTB

CONSULTANT PROJECT MANAGER: R. Bruce Munger, P.E.

	By	Date		By	Date
Designed	HME	05/15	Checked	RBM	05/15
Drawn	TJW	05/15	In Charge of	RAL	05/15

HNTB CORPORATION
340 County Road, Suite 6-C
Westbrook, ME 04092
TEL (207) 774-5155
FAX (207) 228-0909

MAINE TURNPIKE

THE GOLD STAR MEMORIAL HIGHWAY

MTA PROJECT MANAGER: William Yates

FALMOUTH SPUR TOLL PLAZA ORT CONVERSION

GENERAL PLAN 5

SHEET NUMBER: GP-05

CONTRACT:2015.13

ITEM 606.24 GUARDRAIL TYPE 3D - SINGLE RAIL	LF
STA. 150+50.00, LT. TO STA. 158+61.07, LT.	812.5
ITEM 606.80 GUARDRAIL 350 FLEAT TERMINAL	**EA**
STA. 158+61.07, LT.	1
ITEM 205.51WIDENING OF EXISTING SHOULDER	**LF**
STA. 150+50.00, LT. TO 158+61.07, LT.	812.5
ITEM 606.754 WIDEN SHOULDER FOR GUARDRAIL 350 FLARED TERMINAL	**EA**
STA. 158+61.07, LT.	1
ITEM 610.08 PLAIN RIPRAP	**CY**
STA. 155+10.00, LT.	5.75
STA. 155+10.00, RT.	5.75
ITEM 620.58 EROSION CONTROL GEOTEXTILE	**SY**
STA. 155+10.00, LT.	17.0
STA. 155+10.00, RT.	17.0

ITEM 656.632 30" TEMPORARY SILT FENCE	LF
STA. 153+00.0, RT (SIGN FOUNDATION)	20
STA. 154+58.0, LT (SIGN FOUNDATION)	20
STA. 155+00.0, RT (CULVERT END)	20
STA. 161+00.0, RT (SIGN FOUNDATION)	20
STA. 171+50.0, LT TO STA. 179+50.0, LT	800
STA. 193+50.0, RT (ON SIGN)	20

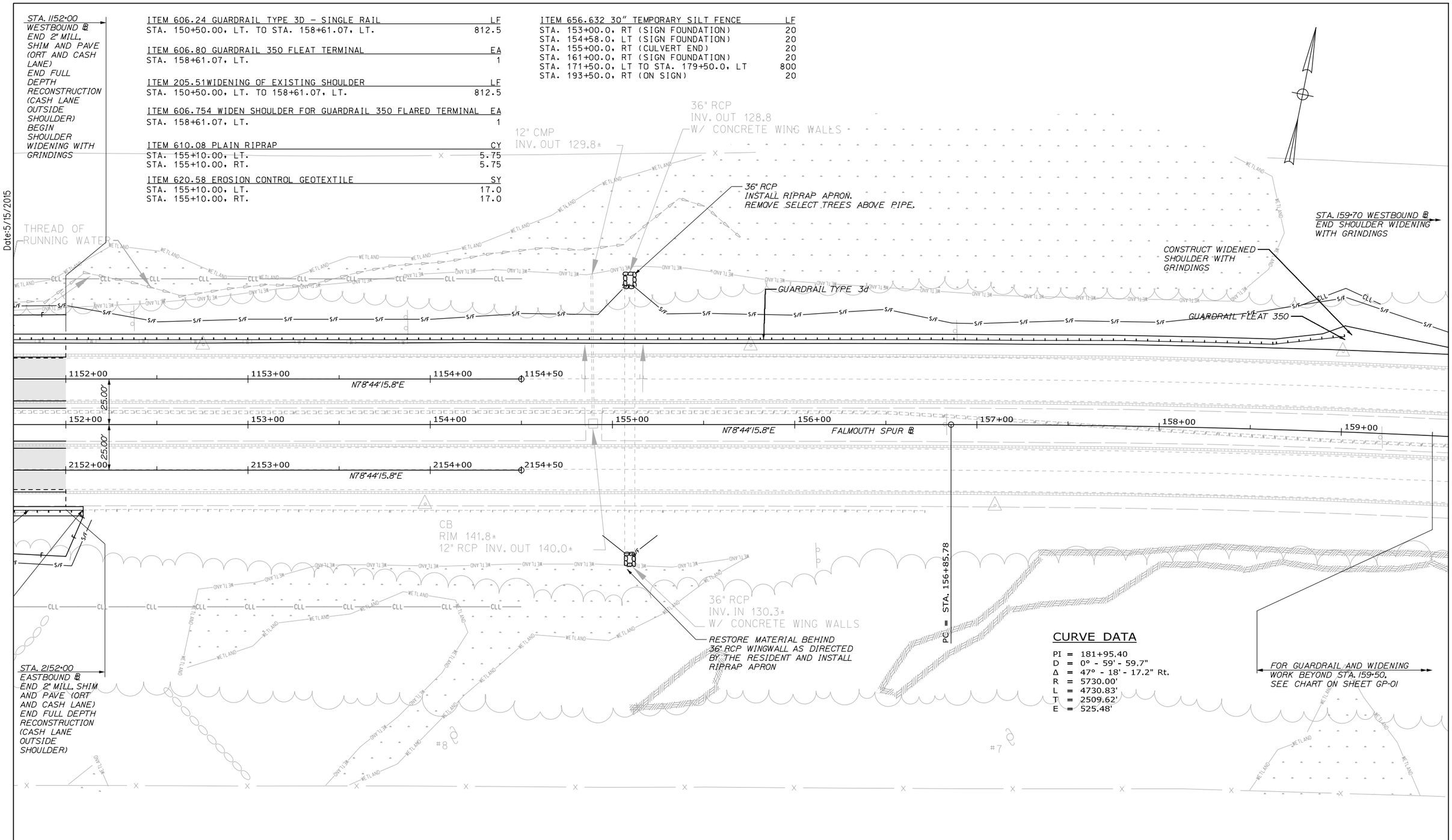

CURVE DATA

PI = 181+95.40
D = 0° - 59' - 59.7"
Δ = 47° - 18' - 17.2" Rt.
R = 5730.00'
L = 4730.83'
T = 2509.62'
E = 525.48'

Date:5/15/2015

Filename: 035_HDPlan6.dgn

Scale: 25 0 25 50
SCALE IN FEET

No.	Revision	By	Date

Designed by: HNTB

CONSULTANT PROJECT MANAGER: R. Bruce Munger, P.E.

	By	Date		By	Date
Designed	HME	05/15	Checked	RBM	05/15
Drawn	TJW	05/15	In Charge of	RAL	05/15

HNTB CORPORATION
340 County Road, Suite 6-C
Westbrook, ME 04092
TEL (207) 774-5155
FAX (207) 228-0909

MAINE TURNPIKE

THE GOLD STAR MEMORIAL HIGHWAY

MTA PROJECT MANAGER: William Yates

FALMOUTH SPUR TOLL PLAZA
ORT CONVERSION

GENERAL PLAN 6

SHEET NUMBER: GP-06

CONTRACT:2015.13

Date:5/15/2015

12" SDR 35

CONNECT NEW 12"ϕ SDR 35 PIPE TO EXISTING WITH COUPLING

MATCH EXIST. CONCRETE SIDEWALK (SAWCUT)

VERTICAL GRANITE CURB (BACKFILL FLUSH W/ TOP CURB ALONG FACE OF SHED)

4'ϕ DMH, RIM= 178.58
APPROX. INV. = 171.8 (CONTRACTOR TO VERIFY INVERT OF EXISTING PIPE AND MATCH)

179.66 (@ DOOR)

2' RAMP @ 2%

NOTE:
SEE HIGHWAY UTILITY PLANS UT-02 TO UT-04 FOR ELECTRICAL AND COMMUNICATIONS.

1½" DRAIN FROM SUMP PUMP

RELOCATE GAS SERVICE

DMH

177.88

BARRIER

FLEAT 350

12" UD TYPE C

19.00' (TYP.)

9.00' (TYP.)

28.00' (TYP.)

WHEELCHAIR RAMP

7' TERMINAL CURB

5' CONCRETE SIDEWALK

VERTICAL GRANITE CURB

R=10'

178.38 (TC)

REMOVE AND DISPOSE OF EXISTING ELJEN INDRAIN DISPOSAL FIELD AND INSTALL 5 - 4'x8'x13" CONCRETE CHAMBERS (H-20) 1 ROW x 5 UNITS LONG - (4'x40')

178.58

178.56

SHED

TOLL PLAZA BRICK BLDG FFE 179.75

179.28

179.62

179.60

179.55

179.39

179.37

179.40

179.36

177.94

177.77

9.54'

BRIDGE TRANSITION

RELOCATE FLAG POLE ON NEW FOUNDATION

7' TERMINAL CURB

3" DRAINS FROM TOLL BOOTHS

LANE 1

LANE 2

REMOVE ABANDONED LEACH FIELD

INSTALL 12"ϕ RCP (L = 44'±) PHASE 1B

12" SDR 35

1140+00

1141+00

1142+00

N78°44'16"E

12"ϕ TUNNEL PERIMETER UD (TYPE-C)

WB ORT

INSTALL 12"ϕ RCP (L = 64'±) PHASE 4

141+00

142+00

EB ORT

2141+00

2142+00

CONNECT 12"ϕ RCP TO EXIST. APPROX. INV. = 173.3±

GENERATOR SHED

1.00' STEP

4'± CONCRETE SIDEWALK

CASH LANE SHOULDER

FFE EL. 179.57

STEP EL. 179.10

EL. 178.58±

178.48 (TC)

PROP. GRADE

VERTICAL GRANITE CURB 6" REVEAL

BACKFILL BEHIND CURB FLUSH WITH TOP OF CURB. LEAVE MIN. 2" BENEATH WOOD SIDING

SECTION A-A

Scale: 10 0 10 20
SCALE IN FEET

No.	Revision	By	Date

Designed by:

HNTB

CONSULTANT PROJECT MANAGER: R. Bruce Munger, P.E.

	By	Date		By	Date
Designed	HME	05/15	Checked	RBM	05/15
Drawn	MPC	05/15	In Charge of	RAL	05/15

HNTB CORPORATION
340 County Road, Suite 6-C
Westbrook, ME 04092
TEL (207) 774-5155
FAX (207) 228-0909

MAINE TURNPIKE

THE GOLD STAR MEMORIAL HIGHWAY

MTA PROJECT MANAGER: William Yates

FALMOUTH SPUR TOLL PLAZA
ORT CONVERSION

PLAZA SITE PLAN

SHEET NUMBER: GP-07

CONTRACT:2015.13

36 OF 153

Filename: 036_HDPlan7.dgn

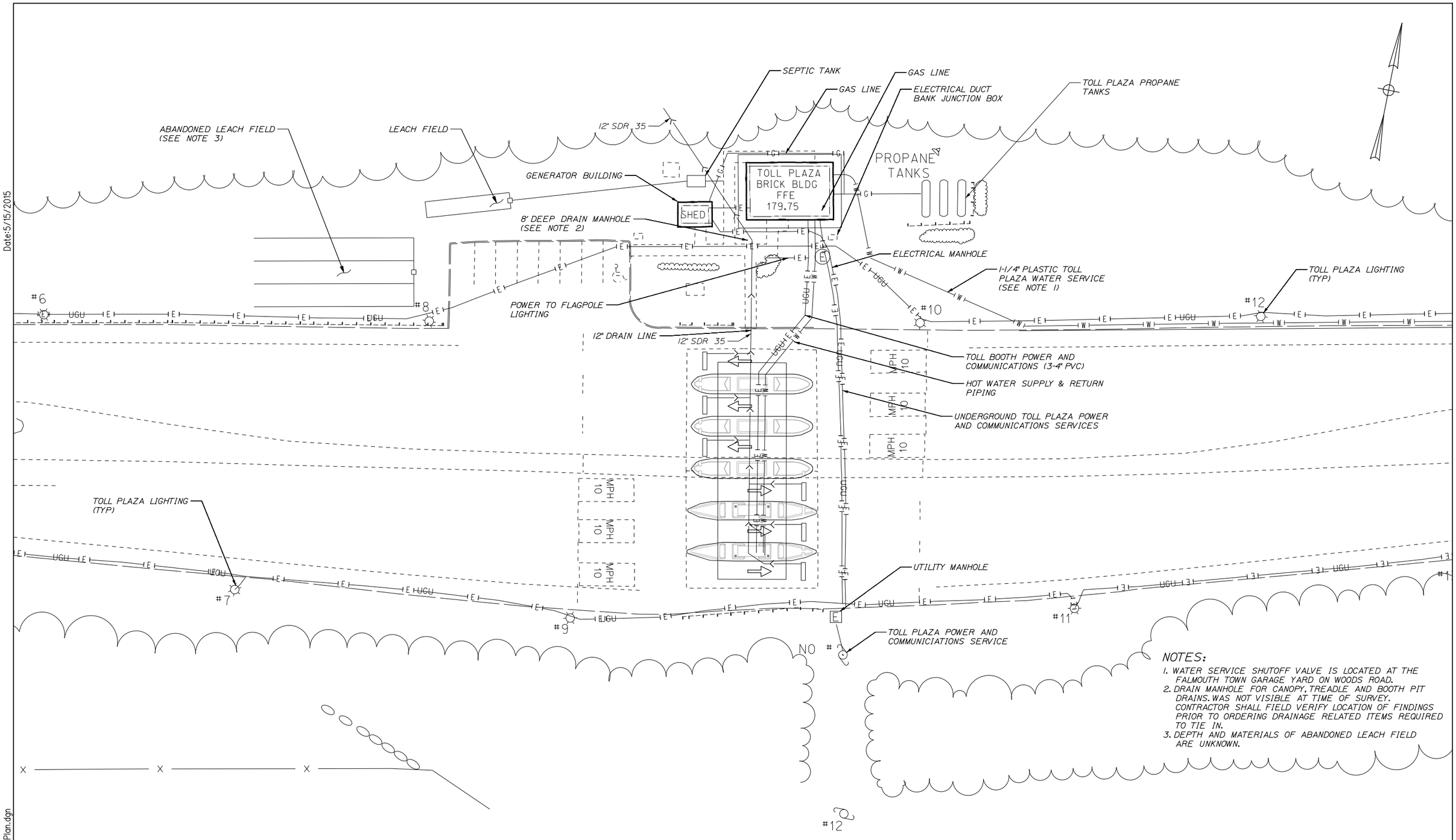

NOTES:

1. WATER SERVICE SHUTOFF VALVE IS LOCATED AT THE FALMOUTH TOWN GARAGE YARD ON WOODS ROAD.
2. DRAIN MANHOLE FOR CANOPY, TREADLE AND BOOTH PIT DRAINS, WAS NOT VISIBLE AT TIME OF SURVEY. CONTRACTOR SHALL FIELD VERIFY LOCATION OF FINDINGS PRIOR TO ORDERING DRAINAGE RELATED ITEMS REQUIRED TO TIE IN.
3. DEPTH AND MATERIALS OF ABANDONED LEACH FIELD ARE UNKNOWN.

Date:5/15/2015

Filename: 037_Existing_Utility_Plan.dgn

Scale: 20 0 20 40
SCALE IN FEET

No.	Revision	By	Date

Designed by: HNTB

CONSULTANT PROJECT MANAGER: R. Bruce Munger, P.E.

	By	Date		By	Date
Designed	HME	05/15	Checked	RBM	05/15
Drawn	TJW	05/15	In Charge of	RAL	05/15

HNTB CORPORATION
340 County Road, Suite 6-C
Westbrook, ME 04092
TEL (207) 774-5155
FAX (207) 228-0909

MAINE TURNPIKE

THE GOLD STAR MEMORIAL HIGHWAY

MTA PROJECT MANAGER: William Yates

FALMOUTH SPUR TOLL PLAZA ORT CONVERSION

EXISTING UTILITY PLAN

SHEET NUMBER: UT-01

CONTRACT:2015.13

Date:5/15/2015

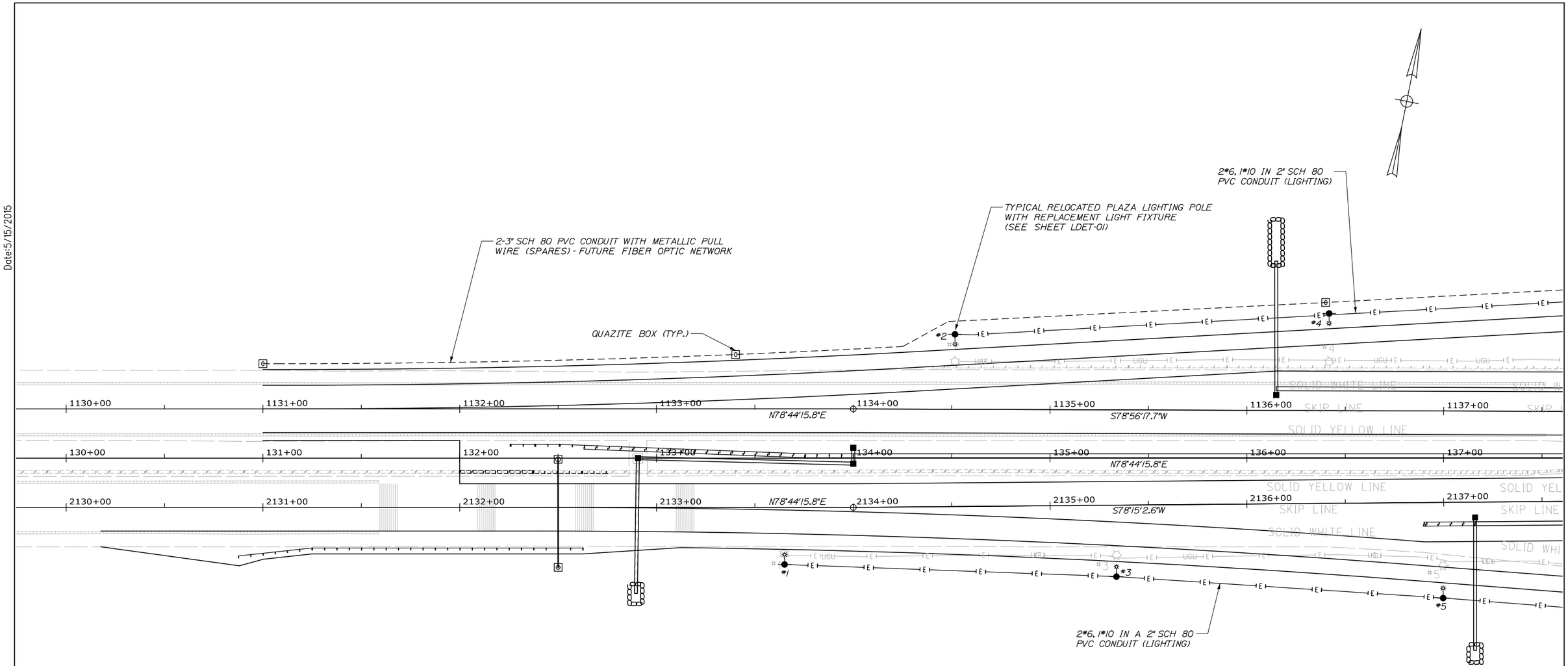

LEGEND

- W — WATER SERVICE
- E — 2#6, 1#10 IN A 2" SCH 80 PVC CONDUIT (LIGHTING)
- 2-3" SCH 80 PVC CONDUIT WITH METALLIC PULL WIRE (SPARES)
- C — QUAZITE JUNCTION BOX
- RESET LIGHT STANDARD ON 24" DIA. CONCRETE FOUNDATION

Scale: 25 0 25 50
SCALE IN FEET

No.	Revision	By	Date

Designed by:

HNTB

CONSULTANT PROJECT MANAGER: R. Bruce Munger, P.E.

	By	Date		By	Date
Designed	LEB	05/15	Checked	HME	05/15
Drawn	MPC	05/15	In Charge of	RAL	05/15

HNTB CORPORATION
340 County Road, Suite 6-C
Westbrook, ME 04092
TEL (207) 774-5155
FAX (207) 228-0909

MAINE TURNPIKE

THE GOLD STAR MEMORIAL HIGHWAY

MTA PROJECT MANAGER: William Yates

FALMOUTH SPUR TOLL PLAZA ORT CONVERSION

HIGHWAY UTILITY PLAN 1

SHEET NUMBER: UT-02

CONTRACT:2015.13

Filename: 038_UTPlan1.dgn

Date:5/15/2015

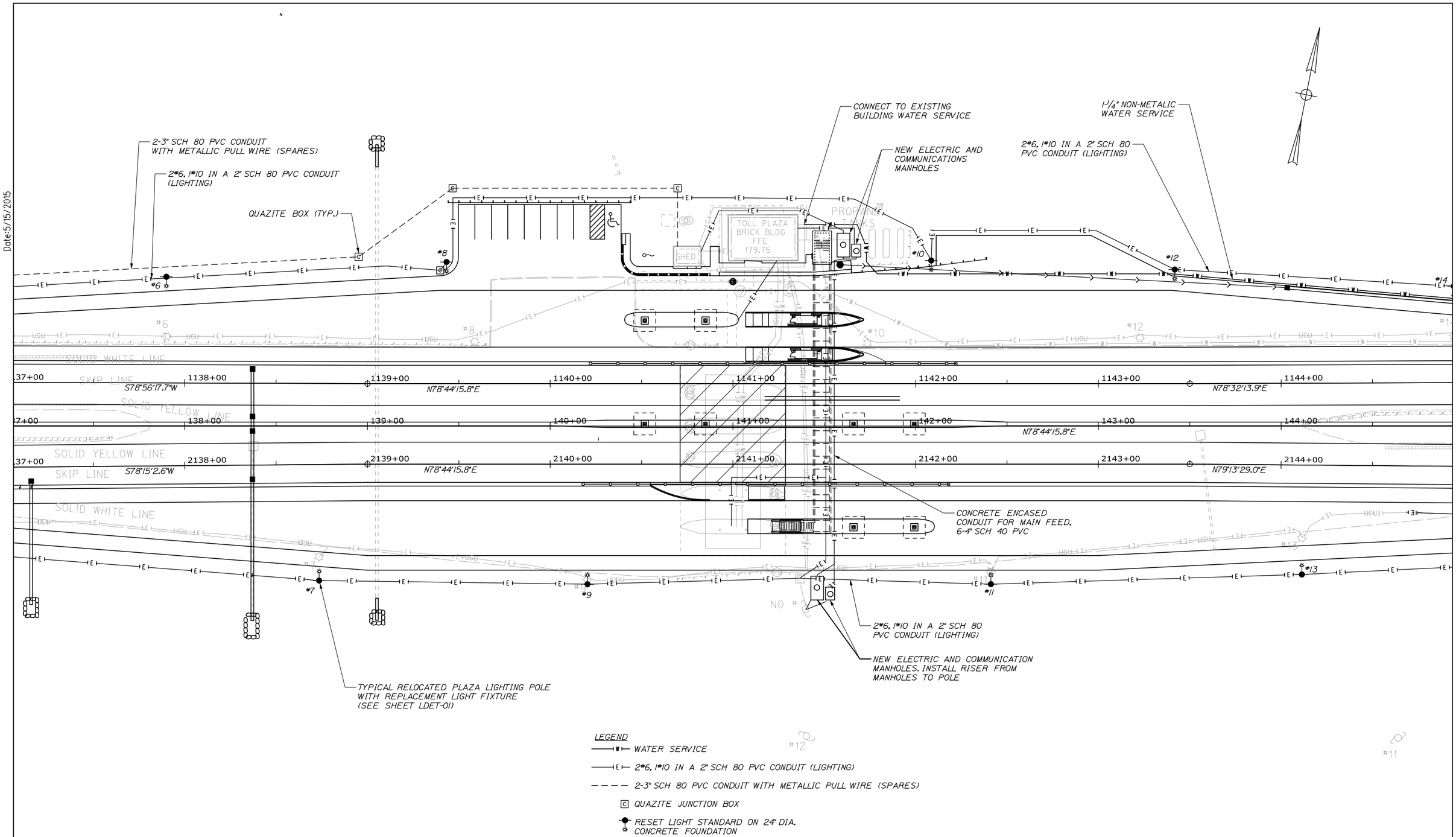

Scale: 25 0 25 50
SCALE IN FEET

No.	Revision	By	Date

Designed by: HNTB

CONSULTANT PROJECT MANAGER: R. Bruce Munger, P.E.

	By	Date		By	Date
Designed	LEB	05/15	Checked	HME	05/15
Drawn	MPC	05/15	In Charge of	RAL	05/15

HNTB CORPORATION
340 County Road, Suite 6-C
Westbrook, ME 04092
TEL (207) 774-5155
FAX (207) 228-0909

MAINE TURNPIKE

THE GOLD STAR MEMORIAL HIGHWAY

MTA PROJECT MANAGER: William Yates

FALMOUTH SPUR TOLL PLAZA ORT CONVERSION

HIGHWAY UTILITY PLAN 2

SHEET NUMBER: UT-03

CONTRACT:2015.13

Filename: 039_UTPlan2.dgn

Date:5/15/2015

2*6, 1*10 IN A 2" SCH 80 PVC CONDUIT (LIGHTING)

1-1/4" NON-METALIC WATER SERVICE

CONNECT TO EXISTING 1-1/4" NON-METALIC WATER SERVICE

#14

#16

#18

SOLID WHITE LINE

SKIP LINE

SOLID YELLOW LINE

1145+00 1146+00 1147+00 1148+00 1149+00 1150+00 1151+00 1152+00

N78°32'13.9"E

N78°44'15.8"E

145+00 146+00 147+00 148+00 149+00 150+00 151+00 152+00

N78°44'15.8"E

2145+00 2146+00 2147+00 2148+00 2149+00 2150+00 2151+00 2152+00

N79°13'29.0"E

N78°44'15.8"E

#15

#17

2*6, 1*10 IN A 2" SCH 80 PVC CONDUIT (LIGHTING)

TYPICAL RELOCATED PLAZA LIGHTING POLE WITH REPLACEMENT LIGHT FIXTURE (SEE SHEET LDET-01)

#11

#10

#9

LEGEND

- WATER SERVICE
- 2*6, 1*10 IN A 2" SCH 80 PVC CONDUIT (LIGHTING)
- 2-3" SCH 80 PVC CONDUIT WITH METALLIC PULL WIRE (SPARES)
- QUAZITE JUNCTION BOX
- RESET LIGHT STANDARD ON 24" DIA. CONCRETE FOUNDATION

Scale: 25 0 25 50

SCALE IN FEET

No.	Revision	By	Date

Designed by:

HNTB

CONSULTANT PROJECT MANAGER: R. Bruce Munger, P.E.

	By	Date		By	Date
Designed	LEB	05/15	Checked	HME	05/15
Drawn	MPC	05/15	In Charge of	RAL	05/15

HNTB CORPORATION
340 County Road, Suite 6-C
Westbrook, ME 04092
TEL (207) 774-5155
FAX (207) 228-0909

MAINE TURNPIKE

THE GOLD STAR MEMORIAL HIGHWAY

MTA PROJECT MANAGER: William Yates

FALMOUTH SPUR TOLL PLAZA
ORT CONVERSION

HIGHWAY UTILITY PLAN 3

SHEET NUMBER: UT-04

CONTRACT:2015.13

40 OF 153

Filename: 040_UTPlan3.dgn

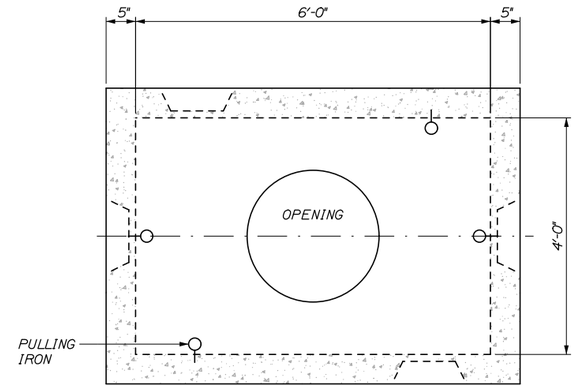

PLAN VIEW

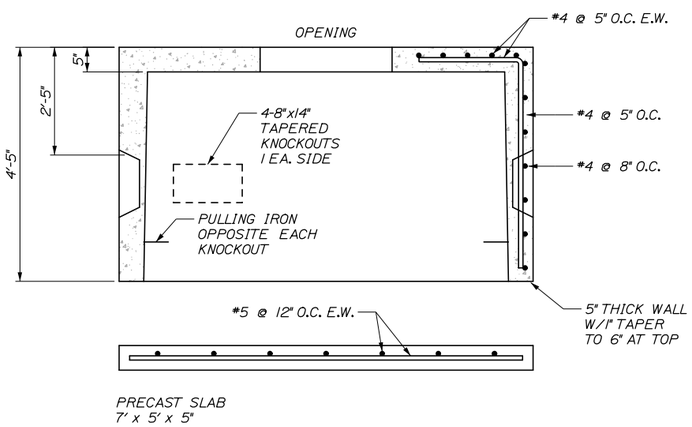

CABLE TV/TELEPHONE MANHOLE DETAIL

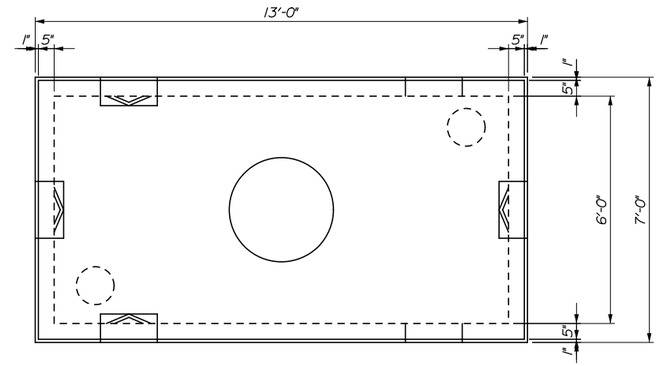

PLAN VIEW

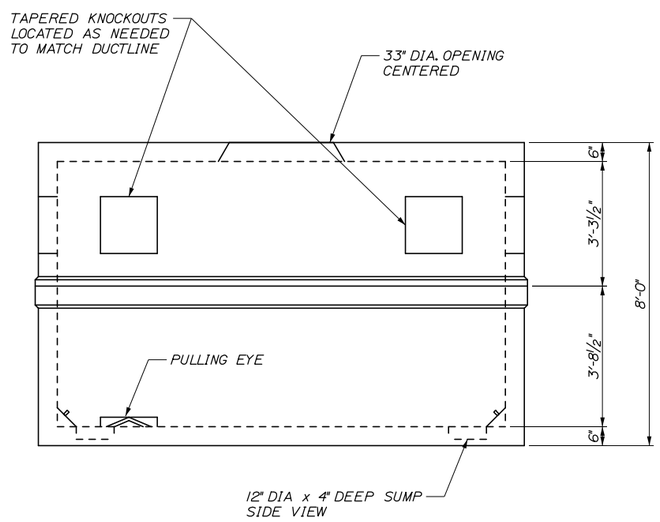

ELECTRICAL MANHOLE DETAIL

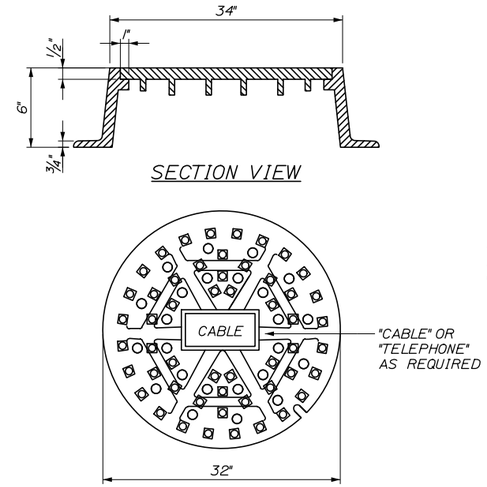

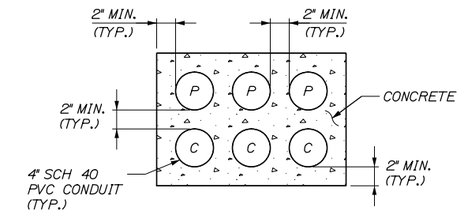

CONCRETE ENCASED CONDUIT DETAIL

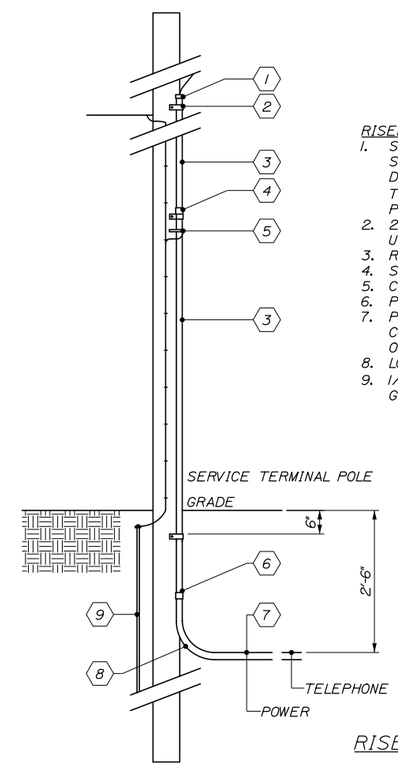

RISER POLE DETAIL
NOT TO SCALE

RISER POLE NOTES:
1. SEAL TOP OF CONDUIT WITH POLYURETHANE SEALER. TOP OF CONDUIT SHALL HAVE A DOUBLE NON-THREADED PLASTIC COUPLING. TOP OF CONDUIT SHALL EXTEND 4" ABOVE PRIMARY NEUTRAL.
2. 2 HOLE U CUPS AT TOP, BOTTOM, AND UNDER EACH COUPLING.
3. RIGID STEEL GALVANIZED CONDUIT.
4. STEEL CONDUIT COUPLING.
5. CONDUIT GROUNDED CONNECTOR.
6. PVC TO STEEL CONDUIT COUPLING.
7. PVC SCHED 40 CONDUIT. COVER WITH CONCRETE WHERE PASSING UNDER ROADWAYS OR DRIVES.
8. LONG SWEEP CONDUIT ELBOW.
9. 1/2IN DIA. X 6FT LONG COPPER GLAD GROUND ROD

CABLE TV/TELEPHONE MANHOLE DETAIL NOTES:
1. CONCRETE: 4,000 PSI @ 28DAYS.
2. USE 32IN COVER AND FRAME MARKED ELEC OR COMM AS REQUIRED. MINIMUM ONE COURSE BRICK TO GRADE.
3. MOUNTINGS FOR CABLE RACKS ECT. CAST IN WALL BY FUTURE PLANS OR FIELD LOCATED.
4. SPLICE BOX SHALL BE SET ON A SUITABLE GRAVEL BASE.
5. REINFORCING: GRADE 60 REBAR:
-REINFORCING PLACED IN CENTER IF CONCRETE SLAB, WALLS, & ROOF.
-#4 @ 5IN O.C. VERTICAL IN WALLS, CANTILEVERED OVER TOP OF OPENING
-#4 @ 8IN O.C. HORIZONTALLY IN WALLS
-4 PIECES #4 SURROUNDING OPENING
-#4 @ 5IN O.C. EACH WAY ON TOP
6. MANHOLE FRAMES AND COVERS ARE TO BE MACHINED TO A SMOOTH FIT AND SHALL BE OF GRAY CAST IRON.
7. COVER SHALL HAVE DIAMOND TOP SURFACE.

ELECTRICAL MANHOLE NOTES:
1. VAULT SHALL BE DESIGNED TO WITHSTAND LOADING WITH 6" OF OVERBURDEN. THE DESIGN SHALL ALSO COMPLY WITH THE STRENGTH REQUIREMENTS OF NATIONAL ELECTRICAL SAFETY CODE SECTION 323A. PROVIDE SHOP DRAWINGS STAMPED BY A STATE OF MAINE REGISTERED PROFESSIONAL ENGINEER UPON REQUEST.
2. JOINTS SEALED WITH ASPHALT.
3. MOUNTINGS FOR CABLE RACKS, ETC. CAST IN WALL BY FURTHER PLANS OR FIELD LOCATED.
4. MANHOLE SHALL BE SET ON A SUITABLE GRAVEL BASE.
5. CABLES ARE TO BE RACKED ALONG ONE WALL ONLY.

Date:5/15/2015

Filename: 041_ElectricalDetails 2.DGN

Scale:

No.	Revision	By	Date

Designed by:

HNTB

CONSULTANT PROJECT MANAGER: R. Bruce Munger, P.E.

	By	Date		By	Date
Designed	RBM	05/15	Checked	RBM	05/15
Drawn	WA	05/15	In Charge of	RAL	05/15

HNTB CORPORATION
340 County Road, Suite 6-C
Westbrook, ME 04092
TEL (207) 774-5155
FAX (207) 228-0909

MAINE TURNPIKE

THE GOLD STAR MEMORIAL HIGHWAY

MTA PROJECT MANAGER: William Yates

FALMOUTH SPUR TOLL PLAZA
ORT CONVERSION

ELECTRICAL DETAILS 2

SHEET NUMBER: UT-05

CONTRACT:2015.13

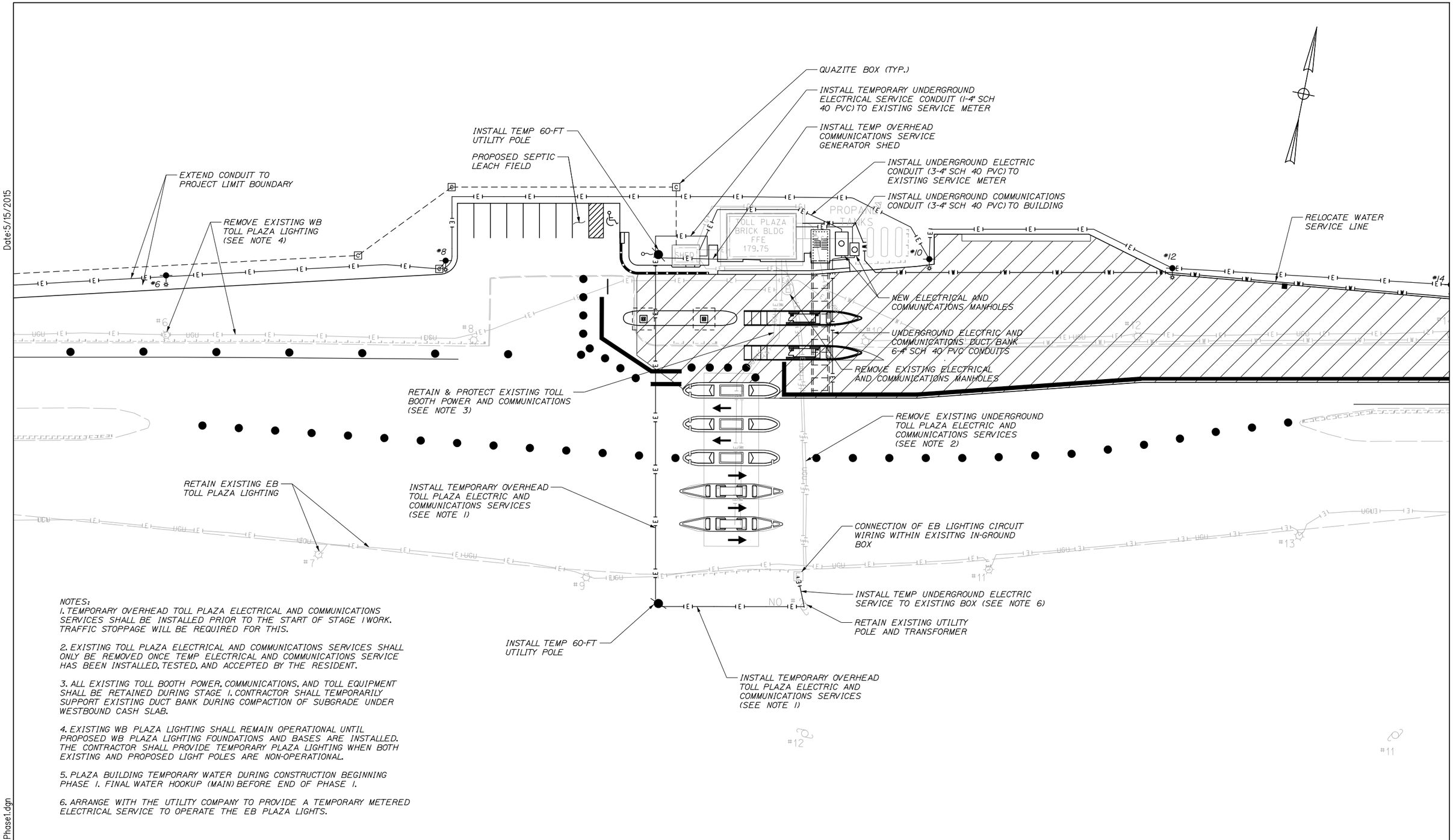

NOTES:

1. TEMPORARY OVERHEAD TOLL PLAZA ELECTRICAL AND COMMUNICATIONS SERVICES SHALL BE INSTALLED PRIOR TO THE START OF STAGE 1 WORK. TRAFFIC STOPPAGE WILL BE REQUIRED FOR THIS.

2. EXISTING TOLL PLAZA ELECTRICAL AND COMMUNICATIONS SERVICES SHALL ONLY BE REMOVED ONCE TEMP ELECTRICAL AND COMMUNICATIONS SERVICE HAS BEEN INSTALLED, TESTED, AND ACCEPTED BY THE RESIDENT.

3. ALL EXISTING TOLL BOOTH POWER, COMMUNICATIONS, AND TOLL EQUIPMENT SHALL BE RETAINED DURING STAGE 1. CONTRACTOR SHALL TEMPORARILY SUPPORT EXISTING DUCT BANK DURING COMPACTION OF SUBGRADE UNDER WESTBOUND CASH SLAB.

4. EXISTING WB PLAZA LIGHTING SHALL REMAIN OPERATIONAL UNTIL PROPOSED WB PLAZA LIGHTING FOUNDATIONS AND BASES ARE INSTALLED. THE CONTRACTOR SHALL PROVIDE TEMPORARY PLAZA LIGHTING WHEN BOTH EXISTING AND PROPOSED LIGHT POLES ARE NON-OPERATIONAL.

5. PLAZA BUILDING TEMPORARY WATER DURING CONSTRUCTION BEGINNING PHASE 1. FINAL WATER HOOKUP (MAIN) BEFORE END OF PHASE 1.

6. ARRANGE WITH THE UTILITY COMPANY TO PROVIDE A TEMPORARY METERED ELECTRICAL SERVICE TO OPERATE THE EB PLAZA LIGHTS.

Scale: 25 0 25 50
SCALE IN FEET

No.	Revision	By	Date

Designed by: HNTB

CONSULTANT PROJECT MANAGER: R. Bruce Munger, P.E.

	By	Date		By	Date
Designed	LEB	05/15	Checked	RBM	05/15
Drawn	MPC	05/15	In Charge of	RAL	05/15

HNTB CORPORATION
340 County Road, Suite 6-C
Westbrook, ME 04092
TEL (207) 774-5155
FAX (207) 228-0909

MAINE TURNPIKE

THE GOLD STAR MEMORIAL HIGHWAY

MTA PROJECT MANAGER: William Yates

FALMOUTH SPUR TOLL PLAZA
ORT CONVERSION

UTILITY STAGING PLAN
PHASE 1A & 1B

SHEET NUMBER: UT-06

CONTRACT: 2015.13

Date: 5/15/2015

Filename: 042_Utility Staging_Phase1.dgn

Date:5/15/2015

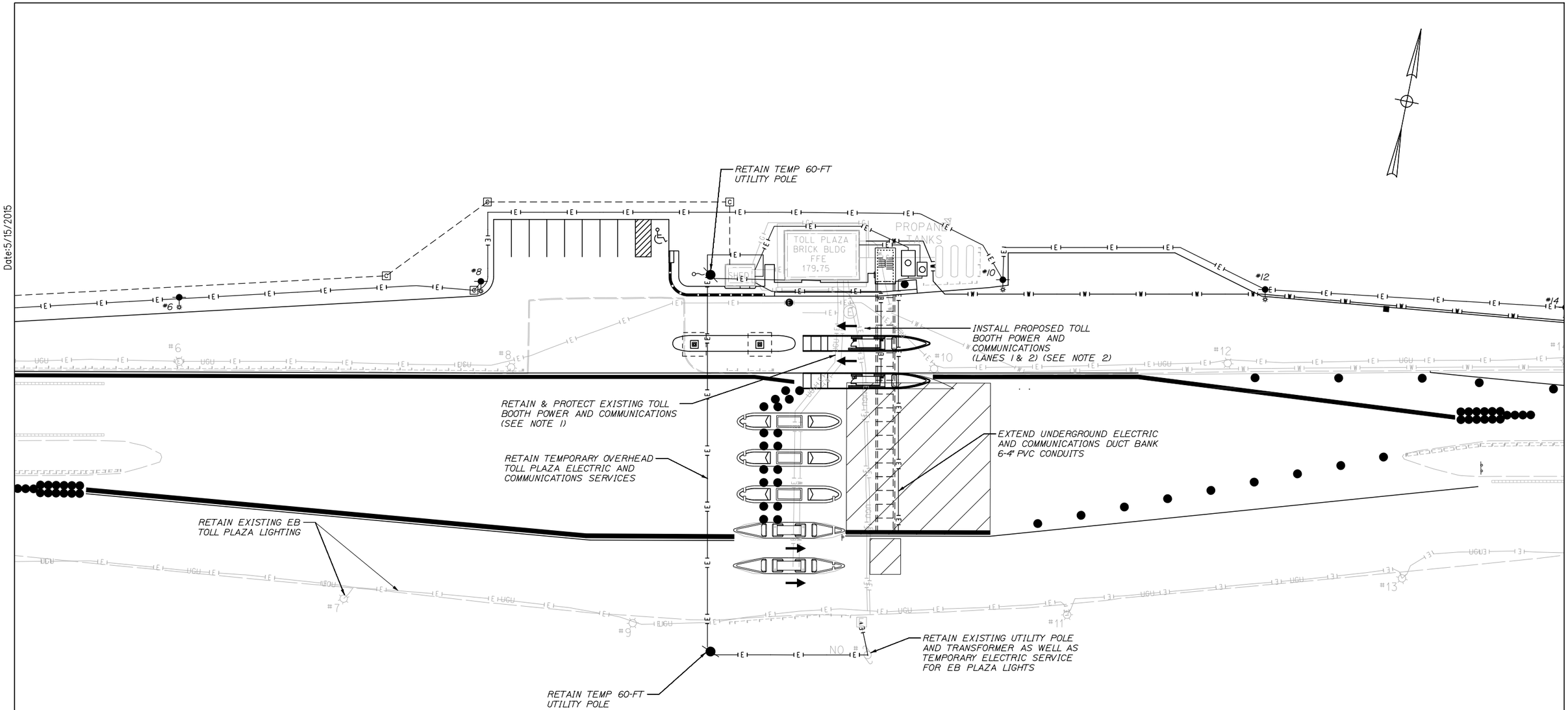

NOTES:
1. ALL EXISTING TOLL BOOTH POWER, COMMUNICAITONS, AND TOLL EQUIPMENT SHALL BE RETAINED DURING STAGE 2.

2. PROPOSED LANE 1 & 2 TOLL BOOTH POWER, COMMUNICAITONS, AND TOLL EQUIPMENT SHALL BE INSTALLED, TESTED, AND ACCEPTED BY THE RESIDENT PRIOR TO THE START OF STAGE 2.

Scale: 25 0 25 50
SCALE IN FEET

No.	Revision	By	Date

Designed by: HNTB

CONSULTANT PROJECT MANAGER: R. Bruce Munger, P.E.

	By	Date		By	Date
Designed	LEB	05/15	Checked	RBM	05/15
Drawn	MPC	05/15	In Charge of	RAL	05/15

HNTB CORPORATION
340 County Road, Suite 6-C
Westbrook, ME 04092
TEL (207) 774-5155
FAX (207) 228-0909

MAINE TURNPIKE

THE GOLD STAR MEMORIAL HIGHWAY

MTA PROJECT MANAGER: William Yates

FALMOUTH SPUR TOLL PLAZA
ORT CONVERSION
UTILITY STAGING PLAN
PHASE 2

SHEET NUMBER: UT-07

CONTRACT:2015.13

Filename: 043_Utility Staging_Phase2.dgn

Date:5/15/2015

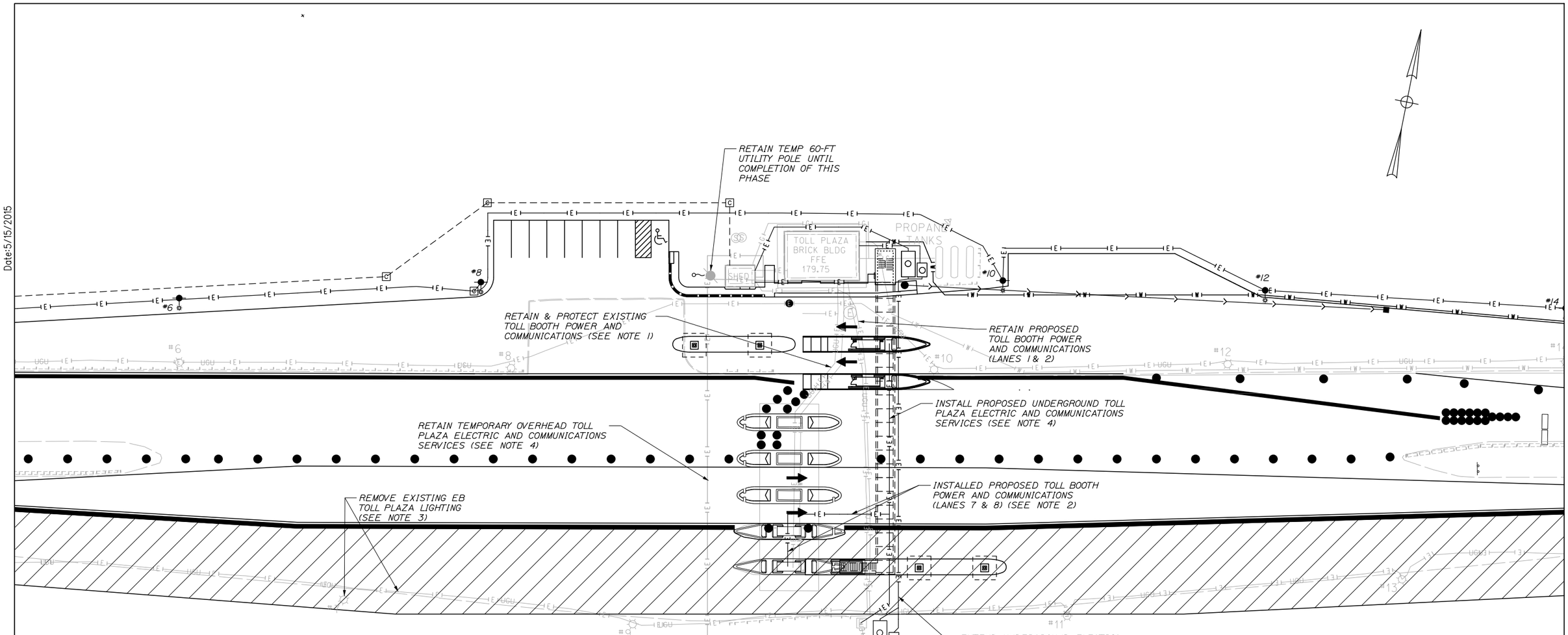

NOTES:

1. EXISTING TOLL BOOTH POWER, COMMUNICAITONS, AND TOLL EQUIPMENT SHALL BE RETAINED FOR EXISTING LANES 1-4 DURING PHASE 3.

2. PROPOSED LANE 7-8 TOLL BOOTH POWER, COMMUNICAITONS, AND TOLL EQUIPMENT SHALL BE INSTALLED, TESTED, AND ACCEPTED BY THE RESIDENT PRIOR TO THE START OF PHASE 4.

3. EXISTING EB PLAZA LIGHTING SHALL REMAIN OPERATIONAL UNTIL PROPOSED EB PLAZA LIGHTING FOUNDATIONS AND BASES ARE INSTALLED. THE CONTRACTOR SHALL PROVIDE TEMPORARY PLAZA LIGHTING WHEN BOTH EXISTING AND PROPOSED LIGHT POLES ARE NON-OPERATIONAL.

4. PROPOSED TOLL PLAZA ELECTRICAL AND COMMUNICAITONS SERVICES SHALL BE INSTALLED THROUGH TUNNEL UTILITY RACEWAYS AND TERMINATED AT EXISITNG PLAZA BUILDING UTILITY PANELS. TEMPORARY PLAZA UTILITY SERVICES SHALL BE RETAINED UNTIL PROPOSED PLAZA UTILITY SERVICES HAVE BEEN INSTALLED, TESTED, AND ACCEPTED BY THE RESIDENT. TEMPORARY PLAZA UTILITY SERVICES AND TEMPORARY UTILITY POLES SHALL BE REMOVED FOLLOWING ACCEPTANCE OF PROPOSED TOLL PLAZA UTILITY SERVICES. TRAFFIC STOPPAGE WILL BE REQUIRED FOR THIS.

5. PROVIDE NEW PERMANENT UNDERGROUND ELECTRIC SERVICE FROM POLE MOUNTED SERVICE TRANSFORMER TO EXISTING SERVICE METER AT GENERATOR SHED. SERVICE CONDUCTORS SHALL BE 3-500 MCM (90°C RATED).

Scale: 25 0 25 50
SCALE IN FEET

No.	Revision	By	Date

Designed by: HNTB

CONSULTANT PROJECT MANAGER: R. Bruce Munger, P.E.

	By	Date		By	Date
Designed	LEB	05/15	Checked	RBM	05/15
Drawn	MPC	05/15	In Charge of	RAL	05/15

HNTB CORPORATION
340 County Road, Suite 6-C
Westbrook, ME 04092
TEL (207) 774-5155
FAX (207) 228-0909

MAINE TURNPIKE

THE GOLD STAR MEMORIAL HIGHWAY

MTA PROJECT MANAGER: William Yates

FALMOUTH SPUR TOLL PLAZA
ORT CONVERSION

UTILITY STAGING PLAN
PHASE 3

SHEET NUMBER: UT-08

CONTRACT:2015.13

Filename: 044_Utility Staging_Phase3.dgn

Date:5/15/2015

GROUND DISTURBANCE AREAS - GUARDRAIL WIDENING

LOCATION	ACRES
STA. 103+62.56	0.26 AC
STA. 117+74.96	0.15 AC
STA. 172+50.50	0.28 AC
TOTAL =	0.69 ACRES

GROUND DISTURBANCE AREAS - PIPE EXTENSIONS

LOCATION	ACRES
STA. 112+99.50	0.02 AC
STA. 122+24.58	0.01 AC
STA. 122+24.58	0.01 AC
STA. 155+09.53	0.02 AC
TOTAL =	0.06 ACRES

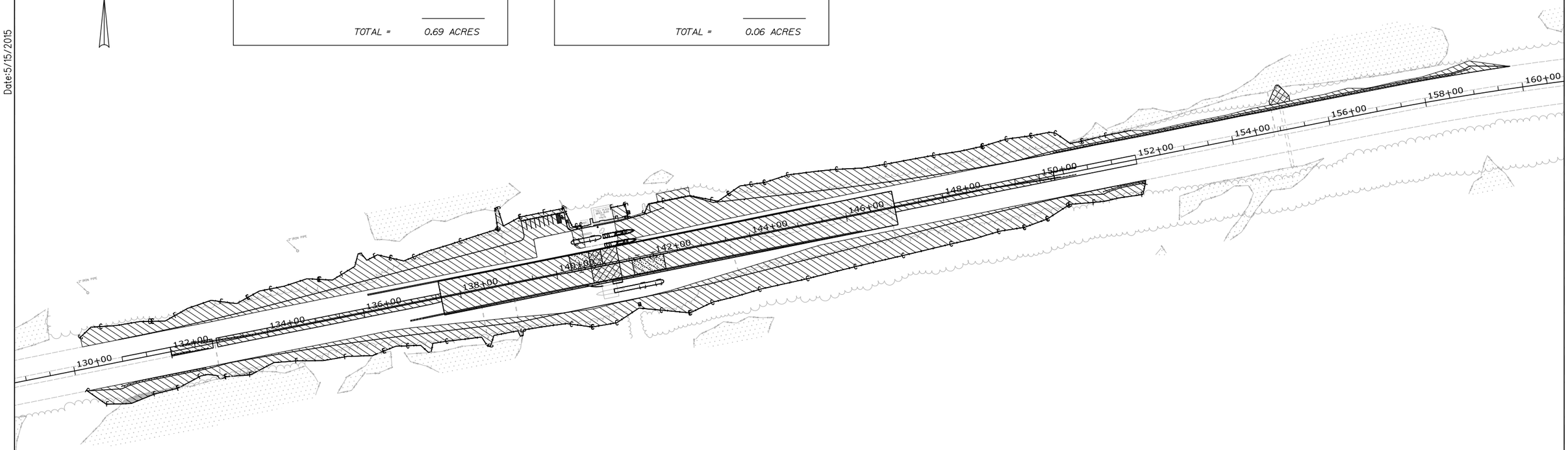

GROUND DISTURBANCE AREAS - OVERHEAD SIGN STRUCTURES

LOCATION	ACRES
OVERHEAD SIGNS	
STA. 132+50	0.06 AC
STA. 150+50	0.06 AC
CANTILEVER SIGNS	
STA. 107+00	0.03 AC
STA. 120+00	0.03 AC
STA. 177+00	0.03 AC
STA. 193+50	0.03 AC
TOTAL =	0.24 ACRES

18" AND 24" FOUNDATION SIGNS

LOCATION	SQ FEET
STA. 36+00	0.01 AC
STA. 36+10	0.01 AC
STA. 127+38	0.01 AC
STA. 130+50	0.01 AC
STA. 153+00	0.01 AC
STA. 154+58	0.01 AC
STA. 161+00	0.01 AC
TOTAL =	0.07 ACRES

LEGEND

CONTRACT LIMIT OF DISTURBANCE
6.62 ACRES

NOTES:

1. EROSION AND SEDIMENTATION CONTROL DEVICES REQUIRED FOR THE CONTRACTOR'S ACCESS LOCATIONS AND STORAGE AREAS WILL NOT BE MEASURED FOR PAYMENT.
2. SEE SPECIFICATIONS FOR CONTRACTOR'S SUBMITTAL REQUIREMENTS IF ADDING ADDITIONAL LIMITS OF DISTURBANCE TO THE PROJECT ESTIMATED QUANTITIES.
3. AN ADDITIONAL 1 ACRE HAS BEEN ESTIMATED FOR CONTRACTOR ACCESS LOCATIONS AND STORAGE AREAS.

Filename: 045_Limits of Disturbance01.dgn

Scale: 100 0 100 200
SCALE IN FEET

No.	Revision	By	Date

Designed by:

HNTB

CONSULTANT PROJECT MANAGER: R. Bruce Munger, P.E.

	By	Date		By	Date
Designed	HME	05/15	Checked	RBM	05/15
Drawn	MPC	05/15	In Charge of	RAL	05/15

HNTB CORPORATION
340 County Road, Suite 6-C
Westbrook, ME 04092
TEL (207) 774-5155
FAX (207) 228-0909

MAINE TURNPIKE

THE GOLD STAR MEMORIAL HIGHWAY

MTA PROJECT MANAGER: William Yates

FALMOUTH SPUR TOLL PLAZA
ORT CONVERSION

LIMIT OF DISTURBANCE PLAN

SHEET NUMBER: LOD-01

CONTRACT:2015.13

Date:5/15/2015

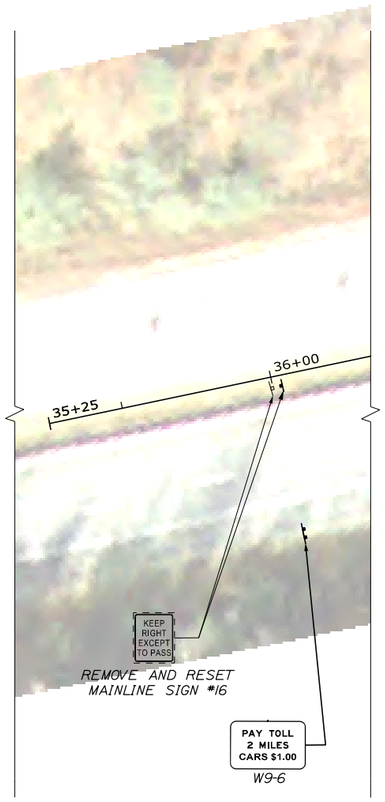

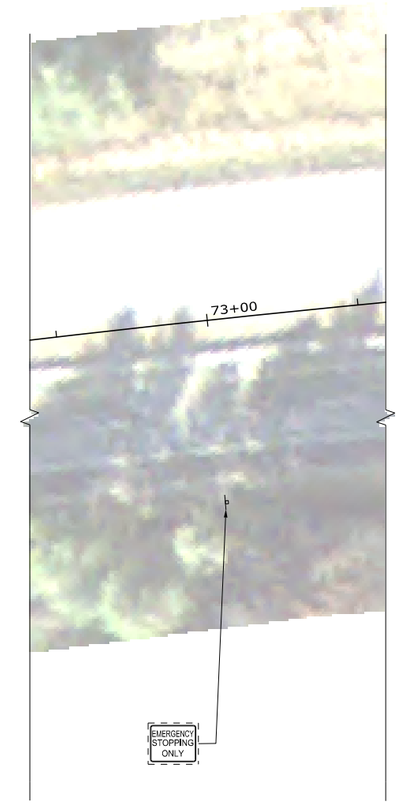

LEGEND

SWL	SOLID WHITE LINE		EXISTING SIGN
SYL	SOLID YELLOW LINE		PROPOSED SIGN
	PROPOSED SIGN		
	EXISTING SIGN		

Scale: 25 0 25 50
1" = 25'

No.	Revision	By	Date

Designed by: HNTB

CONSULTANT PROJECT MANAGER: R. Bruce Munger, P.E.

	By	Date		By	Date
Designed	CNP	05/15	Checked	EAR	05/15
Drawn	CNP	05/15	In Charge of	RAL	05/15

HNTB CORPORATION
340 County Road, Suite 6-C
Westbrook, ME 04092
TEL (207) 774-5155
FAX (207) 228-0909

MAINE TURNPIKE

THE GOLD STAR MEMORIAL HIGHWAY

MTA PROJECT MANAGER: William Yates

FALMOUTH SPUR TOLL PLAZA
ORT CONVERSION

SIGNING AND STRIPING PLAN 1

SHEET NUMBER: SS-01

CONTRACT:2015.13

Filename: 046_ssplan01.dgn

Date:5/15/2015

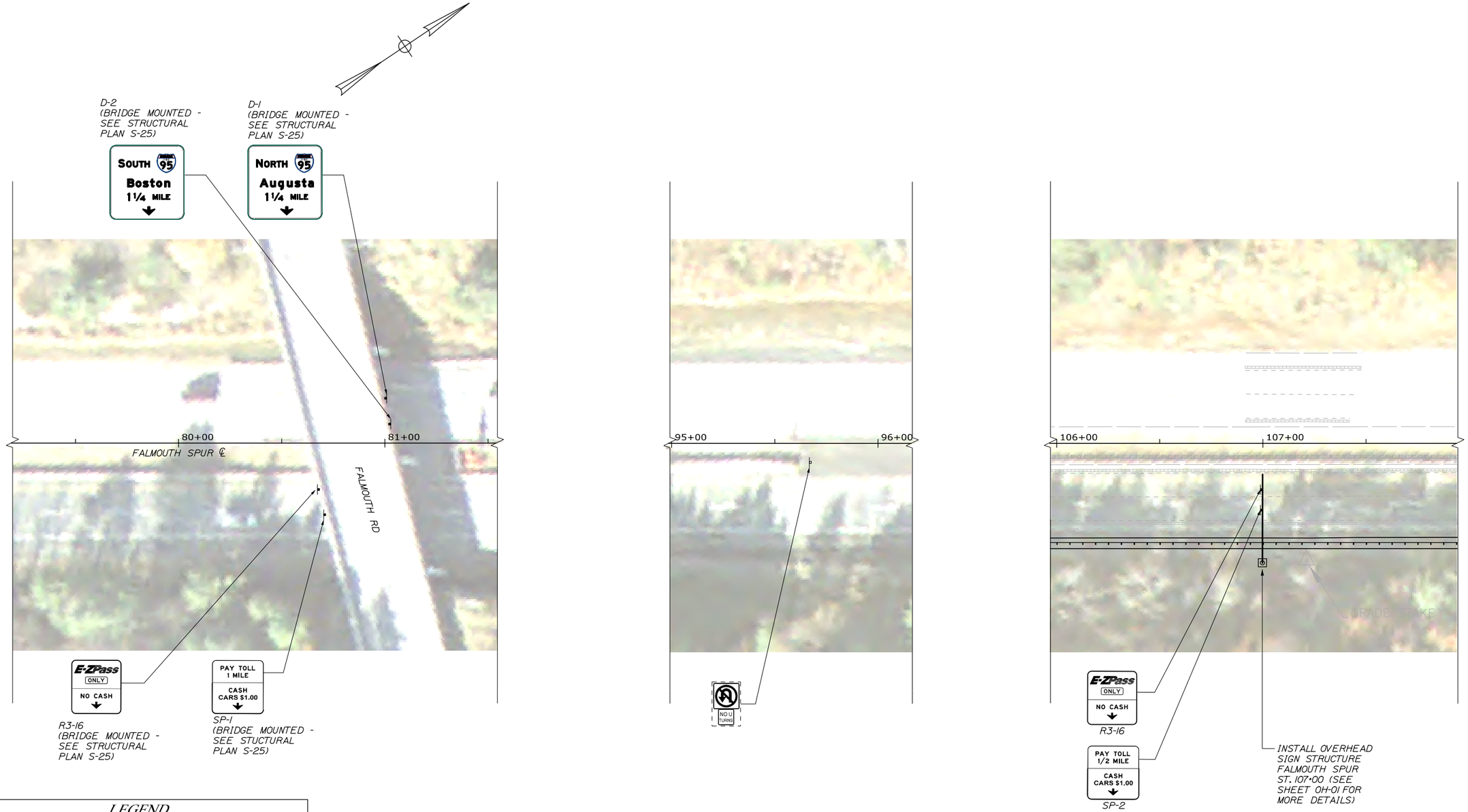

LEGEND

SWL	SOLID WHITE LINE		EXISTING SIGN
SYL	SOLID YELLOW LINE		PROPOSED SIGN
	PROPOSED SIGN		
	EXISTING SIGN		

Scale: 25 0 25 50
1" = 25'

No.	Revision	By	Date

Designed by:

HNTB

CONSULTANT PROJECT MANAGER: R. Bruce Munger, P.E.

	By	Date		By	Date
Designed	CNP	05/15	Checked	EAR	05/15
Drawn	CNP	05/15	In Charge of	RAL	05/15

HNTB CORPORATION
340 County Road, Suite 6-C
Westbrook, ME 04092
TEL (207) 774-5155
FAX (207) 228-0909

MAINE TURNPIKE

THE GOLD STAR MEMORIAL HIGHWAY

MTA PROJECT MANAGER: William Yates

FALMOUTH SPUR TOLL PLAZA ORT CONVERSION

SIGNING AND STRIPING PLAN 2

SHEET NUMBER: SS-02

CONTRACT:2015.13

Filename: 047_ssplan02.dgn

Date:5/15/2015

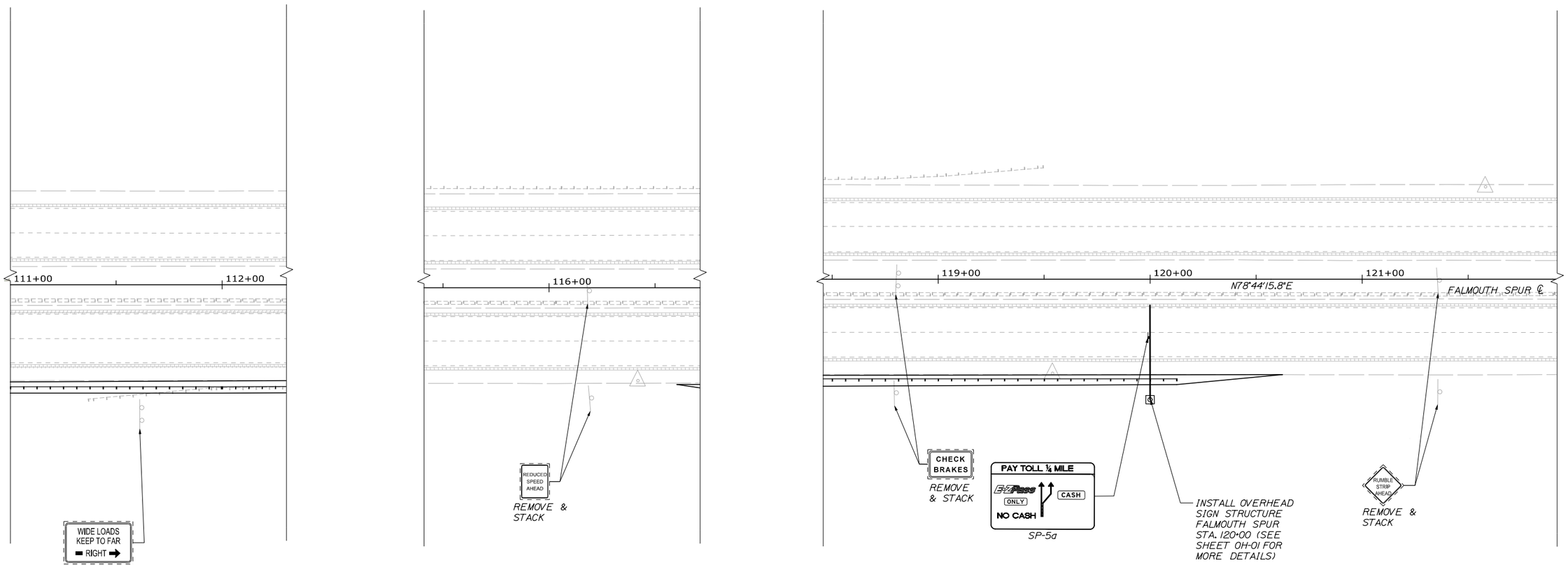

LEGEND

SWL	SOLID WHITE LINE		EXISTING SIGN
SYL	SOLID YELLOW LINE		
	PROPOSED SIGN		PROPOSED SIGN
	EXISTING SIGN		

Scale: 25 0 25 50
1" = 25'

No.	Revision	By	Date

Designed by:

HNTB

CONSULTANT PROJECT MANAGER: R. Bruce Munger, P.E.

	By	Date		By	Date
Designed	CNP	05/15	Checked	EAR	05/15
Drawn	CNP	05/15	In Charge of	RAL	05/15

HNTB CORPORATION
340 County Road, Suite 6-C
Westbrook, ME 04092
TEL (207) 774-5155
FAX (207) 228-0909

MAINE TURNPIKE

THE GOLD STAR MEMORIAL HIGHWAY

MTA PROJECT MANAGER: William Yates

FALMOUTH SPUR TOLL PLAZA
ORT CONVERSION

SIGNING AND STRIPING PLAN 3

SHEET NUMBER: SS-03

CONTRACT:2015.13

Filename: 048_ssplan03.dgn

Date:5/15/2015

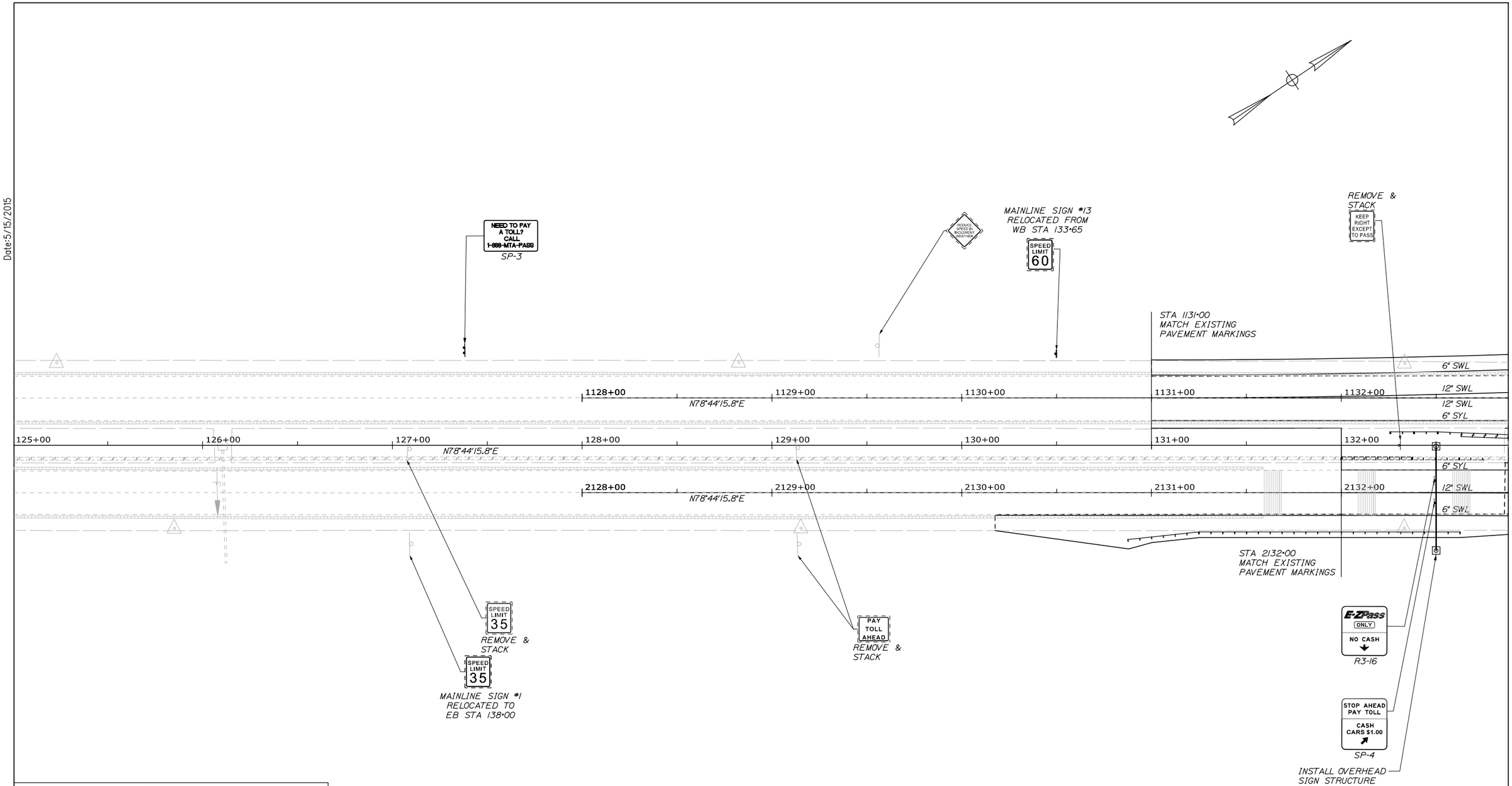

LEGEND

SWL	SOLID WHITE LINE		EXISTING SIGN
SYL	SOLID YELLOW LINE		PROPOSED SIGN
	PROPOSED SIGN		
	EXISTING SIGN		

Scale: 25 0 25 50
1" = 25'

No.	Revision	By	Date

Designed by:

HNTB

CONSULTANT PROJECT MANAGER: R. Bruce Munger, P.E.

	By	Date		By	Date
Designed	CNP	05/15	Checked	EAR	05/15
Drawn	CNP	05/15	In Charge of	RAL	05/15

HNTB CORPORATION
340 County Road, Suite 6-C
Westbrook, ME 04092
TEL (207) 774-5155
FAX (207) 228-0909

MAINE TURNPIKE

THE GOLD STAR MEMORIAL HIGHWAY

MTA PROJECT MANAGER: William Yates

FALMOUTH SPUR TOLL PLAZA ORT CONVERSION

SIGNING AND STRIPING PLAN 4

SHEET NUMBER: SS-04

CONTRACT:2015.13

Filename: 049_ssplan04.dgn

Date:5/15/2015

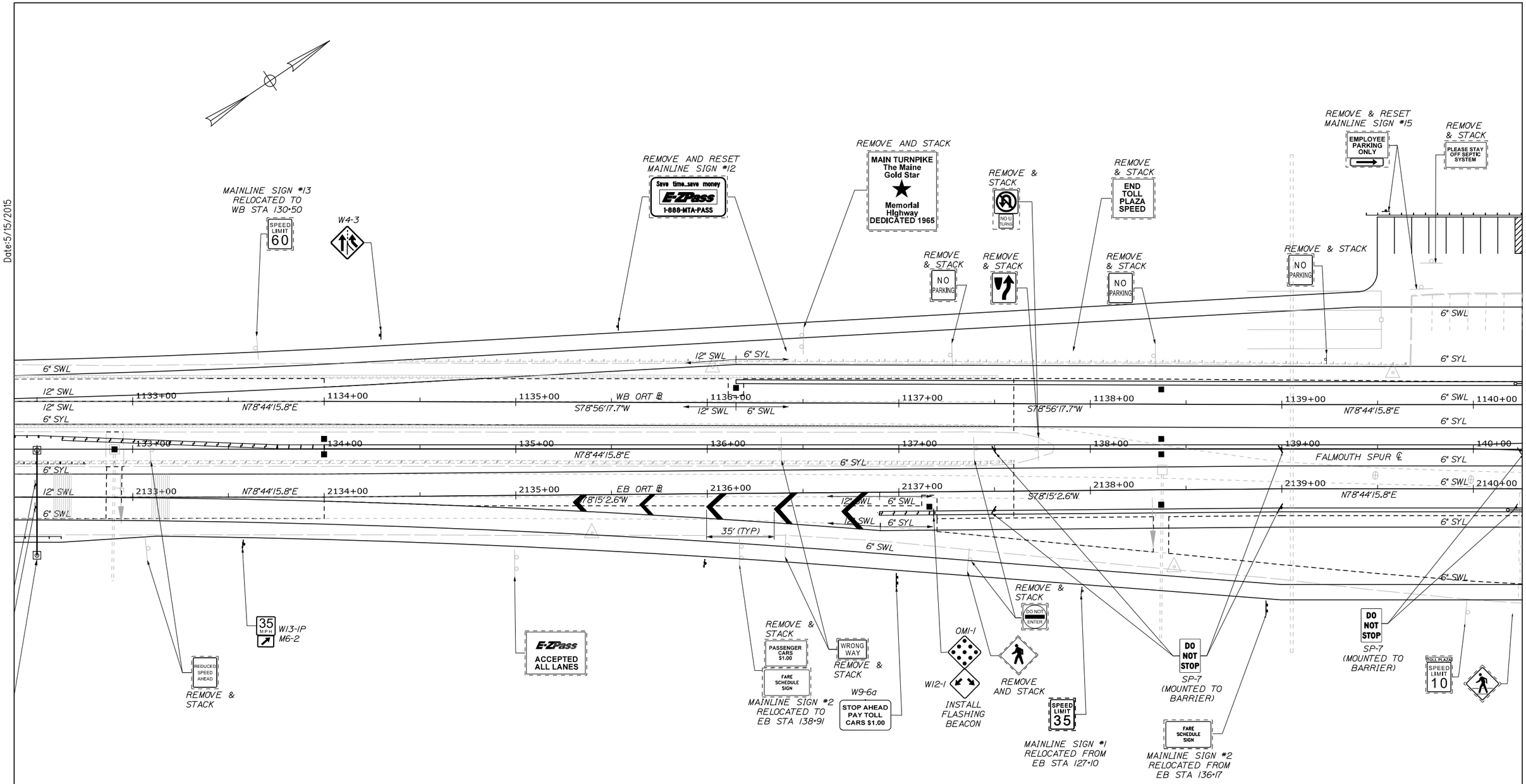

LEGEND

SWL	SOLID WHITE LINE		EXISTING SIGN
SYL	SOLID YELLOW LINE		PROPOSED SIGN
	PROPOSED SIGN		
	EXISTING SIGN		

Scale: 25 0 25 50
1" = 25'

No.	Revision	By	Date

Designed by:

HNTB

CONSULTANT PROJECT MANAGER: R. Bruce Munger, P.E.

	By	Date		By	Date
Designed	CNP	05/15	Checked	EAR	05/15
Drawn	CNP	05/15	In Charge of	RAL	05/15

HNTB CORPORATION
340 County Road, Suite 6-C
Westbrook, ME 04092
TEL (207) 774-5155
FAX (207) 228-0909

MAINE TURNPIKE

THE GOLD STAR MEMORIAL HIGHWAY

MTA PROJECT MANAGER: William Yates

FALMOUTH SPUR TOLL PLAZA ORT CONVERSION

SIGNING AND STRIPING PLAN 5

SHEET NUMBER: SS-05

CONTRACT:2015.13

Filename: 050_ssplan05.dgn

Date:5/15/2015

REMOVE & RESET MAINLINE SIGN #11
EMPLOYEE PARKING ONLY

REMOVE & STACK
PLEASE STAY OFF SEPTIC SYSTEM

REMOVE & STACK
PLEASE STAY OFF SEPTIC SYSTEM

R2-1(60), (2) SP-7w (MOUNTED TO SPACE FRAME)
DO NOT STOP | SPEED LIMIT 60 | DO NOT STOP

CROSS WALK 2-12" SWL

REMOVE & STACK
E-ZPass OTHERS PROHIBITED

REMOVE AND RESET MAINLINE SIGN #14
ANY VEHICLE CASH/RECEIPTS

ANY VEHICLE CASH/RECEIPTS
SP-6

TOLL PLAZA BRICK BLDG FFE 179.75

SHED

REMOVE AND RESET MAINLINE SIGN #10

REMOVE AND RESET MAINLINE SIGN #9
TOLL PLAZA SPEED LIMIT 10

SP-7 (MOUNTED TO BARRIER)
DO NOT STOP

MAINLINE SIGN #7 RELOCATED FROM WB STA 146+50
FARE SCHEDULE SIGN

REMOVE AND STACK

MAINLINE SIGN #8 RELOCATED FROM WB STA 148+94
SPEED LIMIT 35

REMOVE & STACK
DO NOT ENTER

INSTALL FLASHING BEACON
OMI-1
W12-1

DO NOT STOP
SP-7 (MOUNTED TO BARRIER)

W9-6a
STOP AHEAD PAY TOLL CARS $1.00

REMOVE & STACK
WRONG WAY

REMOVE & STACK
PROHIBITED ON TURNPIKE

REMOVE & STACK
PASSENGER CARS $1.00
FARE SCHEDULE SIGN

MAINLINE SIGN #7 RELOCATED TO WB STA 143+50

REMOVE & STACK
REDUCED SPEED AHEAD

REDUCED SPEED AHEAD
REMOVE & STACK

6" SWL
6" SYL
12" SWL
35' (TYP)

1140+00 1141+00 1142+00 1143+00 1144+00 1145+00 1146+00 1147+00
140+00 141+00 142+00 143+00 144+00 145+00 146+00 147+00
2140+00 2141+00 2142+00 2143+00 2144+00 2145+00 2146+00 2147+00

N78°32'13.8"E
WB ORT ℄
N78°44'15.8"E
FALMOUTH SPUR ℄
N79°32'29.8"E
EB ORT ℄

MPH 10

ANY VEHICLE CASH/RECEIPTS
SP-6

DO NOT STOP | SPEED LIMIT 60 | DO NOT STOP
R2-1(60), (2) SP-7w (MOUNTED TO SPACE FRAME)

TOLL PLAZA SPEED LIMIT 10

REMOVE & STACK
E-ZPass OTHERS PROHIBITED

ANY VEHICLE CASH/RECEIPTS

REMOVE & STACK

REMOVE & STACK
NO U TURNS

Save time..save money
E-ZPass
1-888-MTA-PASS
REMOVE AND RESET MAINLINE SIGN #3

NO #
#12
#11

LEGEND

SWL	SOLID WHITE LINE		EXISTING SIGN
SYL	SOLID YELLOW LINE		PROPOSED SIGN
	PROPOSED SIGN		
	EXISTING SIGN		

Scale: 25 0 25 50
1" = 25'

No.	Revision	By	Date

Designed by:

HNTB

CONSULTANT PROJECT MANAGER: R. Bruce Munger, P.E.

	By	Date		By	Date
Designed	CNP	05/15	Checked	EAR	05/15
Drawn	CNP	05/15	In Charge of	RAL	05/15

HNTB CORPORATION
340 County Road, Suite 6-C
Westbrook, ME 04092
TEL (207) 774-5155
FAX (207) 228-0909

MAINE TURNPIKE

THE GOLD STAR MEMORIAL HIGHWAY

MTA PROJECT MANAGER: William Yates

FALMOUTH SPUR TOLL PLAZA
ORT CONVERSION

SIGNING AND STRIPING PLAN 6

SHEET NUMBER: SS-06

CONTRACT:2015.13

Filename: 051_ssplan06.dgn

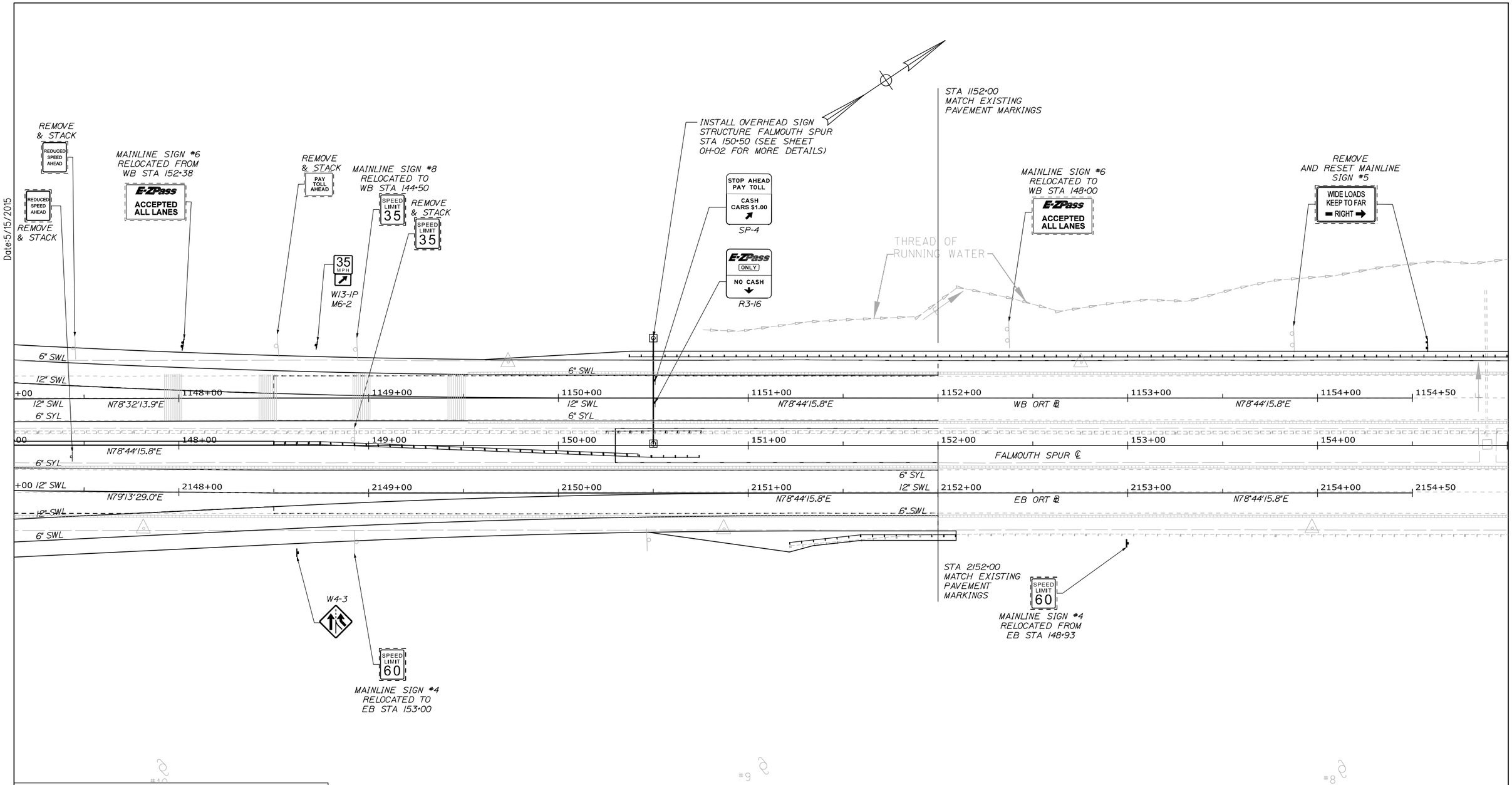

LEGEND

SWL	SOLID WHITE LINE		EXISTING SIGN
SYL	SOLID YELLOW LINE		PROPOSED SIGN
	PROPOSED SIGN		
	EXISTING SIGN		

Date:5/15/2015

Filename: 052_ssplan07.dgn

Scale: 25 0 25 50
1" = 25'

No.	Revision	By	Date

Designed by:

HNTB

CONSULTANT PROJECT MANAGER: R. Bruce Munger, P.E.

	By	Date		By	Date
Designed	CNP	05/15	Checked	EAR	05/15
Drawn	CNP	05/15	In Charge of	RAL	05/15

HNTB CORPORATION
340 County Road, Suite 6-C
Westbrook, ME 04092
TEL (207) 774-5155
FAX (207) 228-0909

MAINE TURNPIKE

THE GOLD STAR MEMORIAL HIGHWAY

MTA PROJECT MANAGER: William Yates

FALMOUTH SPUR TOLL PLAZA ORT CONVERSION

SIGNING AND STRIPING PLAN 7

SHEET NUMBER: SS-07

CONTRACT:2015.13

Date:5/15/2015

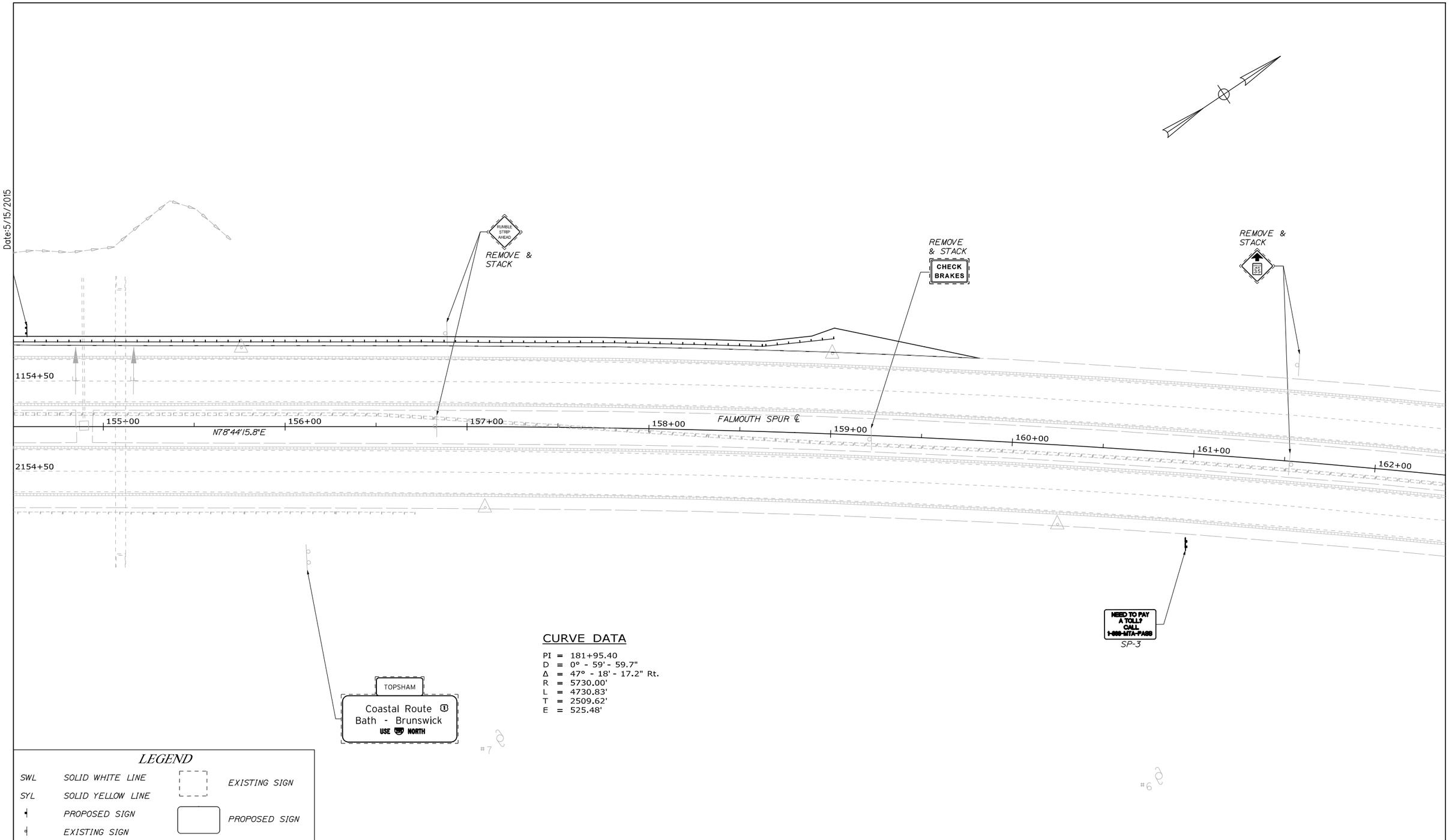

CURVE DATA

PI = 181+95.40
D = 0° - 59' - 59.7"
Δ = 47° - 18' - 17.2" Rt.
R = 5730.00'
L = 4730.83'
T = 2509.62'
E = 525.48'

LEGEND

SWL	SOLID WHITE LINE		EXISTING SIGN
SYL	SOLID YELLOW LINE		PROPOSED SIGN
	PROPOSED SIGN		
	EXISTING SIGN		

Filename: 053_ssplan08.dgn

Scale: 25 0 25 50
1" = 25'

No.	Revision	By	Date

Designed by: HNTB

CONSULTANT PROJECT MANAGER: R. Bruce Munger, P.E.

	By	Date		By	Date
Designed	CNP	05/15	Checked	EAR	05/15
Drawn	CNP	05/15	In Charge of	RAL	05/15

HNTB CORPORATION
340 County Road, Suite 6-C
Westbrook, ME 04092
TEL (207) 774-5155
FAX (207) 228-0909

MAINE TURNPIKE

THE GOLD STAR MEMORIAL HIGHWAY

MTA PROJECT MANAGER: William Yates

FALMOUTH SPUR TOLL PLAZA ORT CONVERSION

SIGNING AND STRIPING PLAN 8

SHEET NUMBER: SS-08

CONTRACT:2015.13

Date:5/15/2015

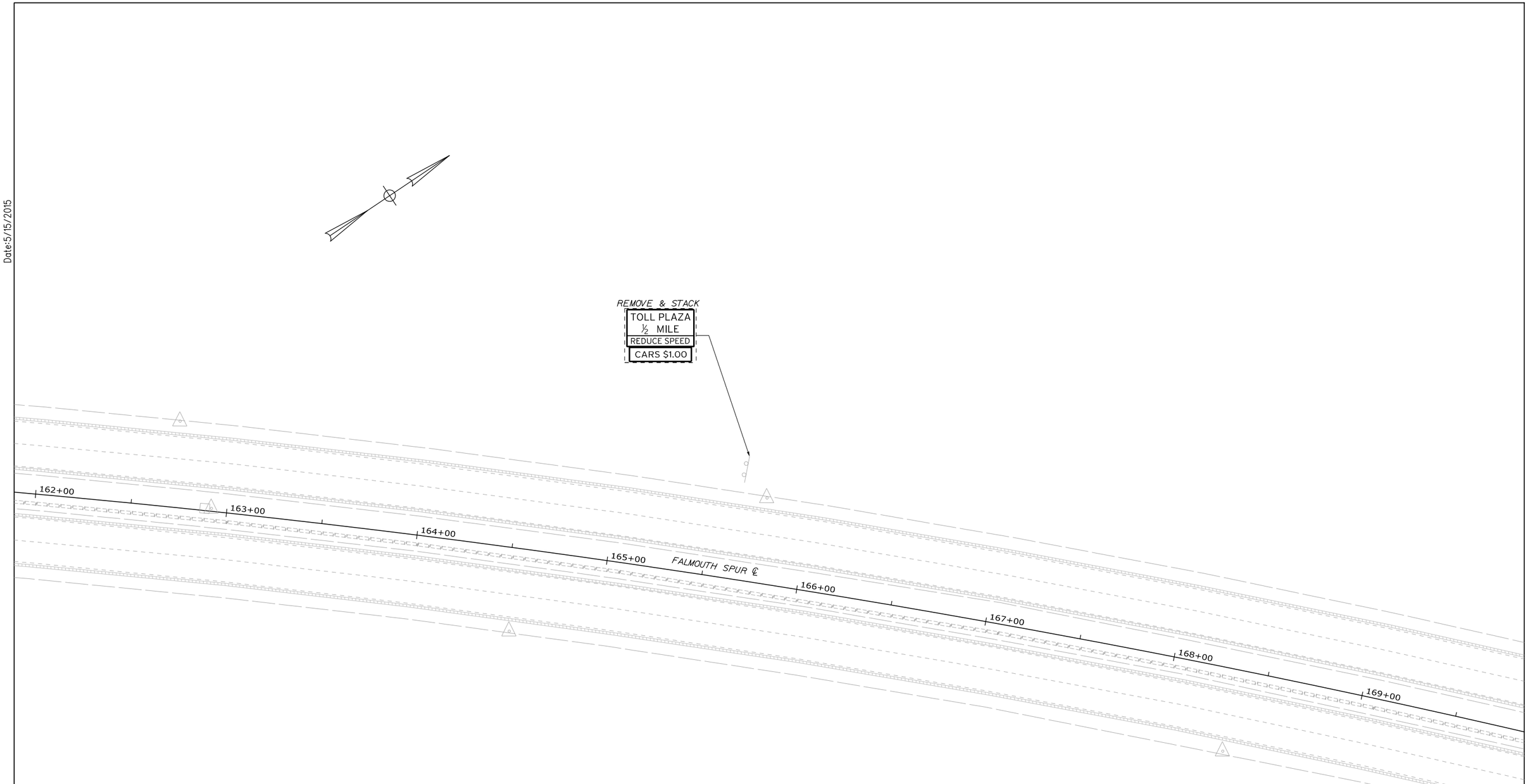

LEGEND

SWL	SOLID WHITE LINE		EXISTING SIGN
SYL	SOLID YELLOW LINE		
	PROPOSED SIGN		PROPOSED SIGN
	EXISTING SIGN		

Scale: 25 0 25 50
1" = 25'

No.	Revision	By	Date

Designed by:

HNTB

CONSULTANT PROJECT MANAGER: R. Bruce Munger, P.E.

	By	Date		By	Date
Designed	CNP	05/15	Checked	EAR	05/15
Drawn	CNP	05/15	In Charge of	RAL	05/15

HNTB CORPORATION
340 County Road, Suite 6-C
Westbrook, ME 04092
TEL (207) 774-5155
FAX (207) 228-0909

MAINE TURNPIKE

THE GOLD STAR MEMORIAL HIGHWAY

MTA PROJECT MANAGER: William Yates

FALMOUTH SPUR TOLL PLAZA ORT CONVERSION

SIGNING AND STRIPING PLAN 9

SHEET NUMBER: SS-09

CONTRACT:2015.13

Filename: 054_ssplan09.dgn

Date:5/15/2015

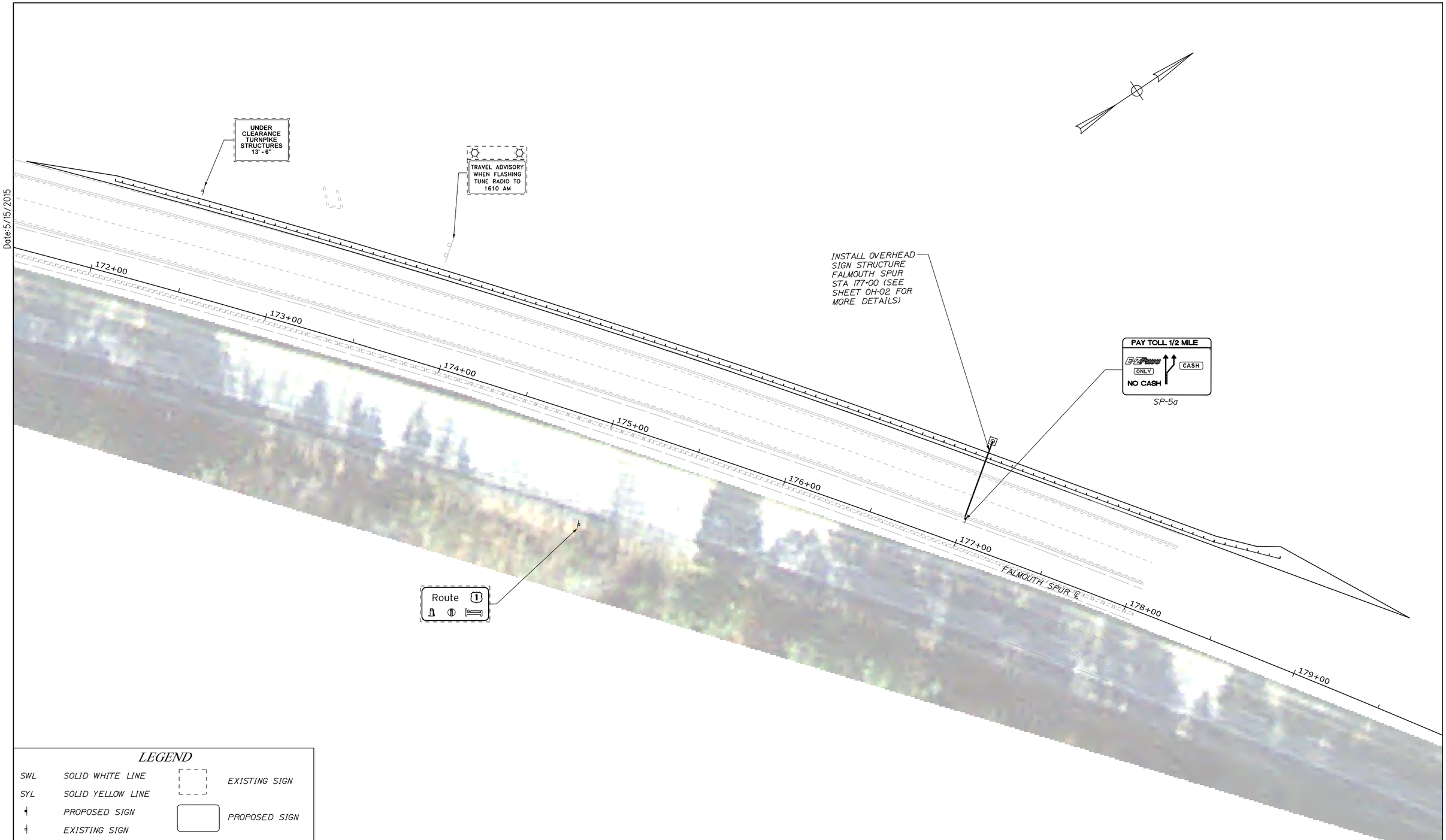

LEGEND

SWL	SOLID WHITE LINE		EXISTING SIGN
SYL	SOLID YELLOW LINE		
	PROPOSED SIGN		PROPOSED SIGN
	EXISTING SIGN		

Scale: 25 0 25 50
1" = 25'

No.	Revision	By	Date

Designed by:

HNTB

CONSULTANT PROJECT MANAGER: R. Bruce Munger, P.E.

	By	Date		By	Date
Designed	CNP	05/15	Checked	EAR	05/15
Drawn	CNP	05/15	In Charge of	RAL	05/15

HNTB CORPORATION
340 County Road, Suite 6-C
Westbrook, ME 04092
TEL (207) 774-5155
FAX (207) 228-0909

MAINE TURNPIKE

THE GOLD STAR MEMORIAL HIGHWAY

MTA PROJECT MANAGER: William Yates

FALMOUTH SPUR TOLL PLAZA ORT CONVERSION

SIGNING AND STRIPING PLAN 10

SHEET NUMBER: SS-10

CONTRACT:2015.13

Filename: 055_ssplan10.dgn

Date:5/15/2015

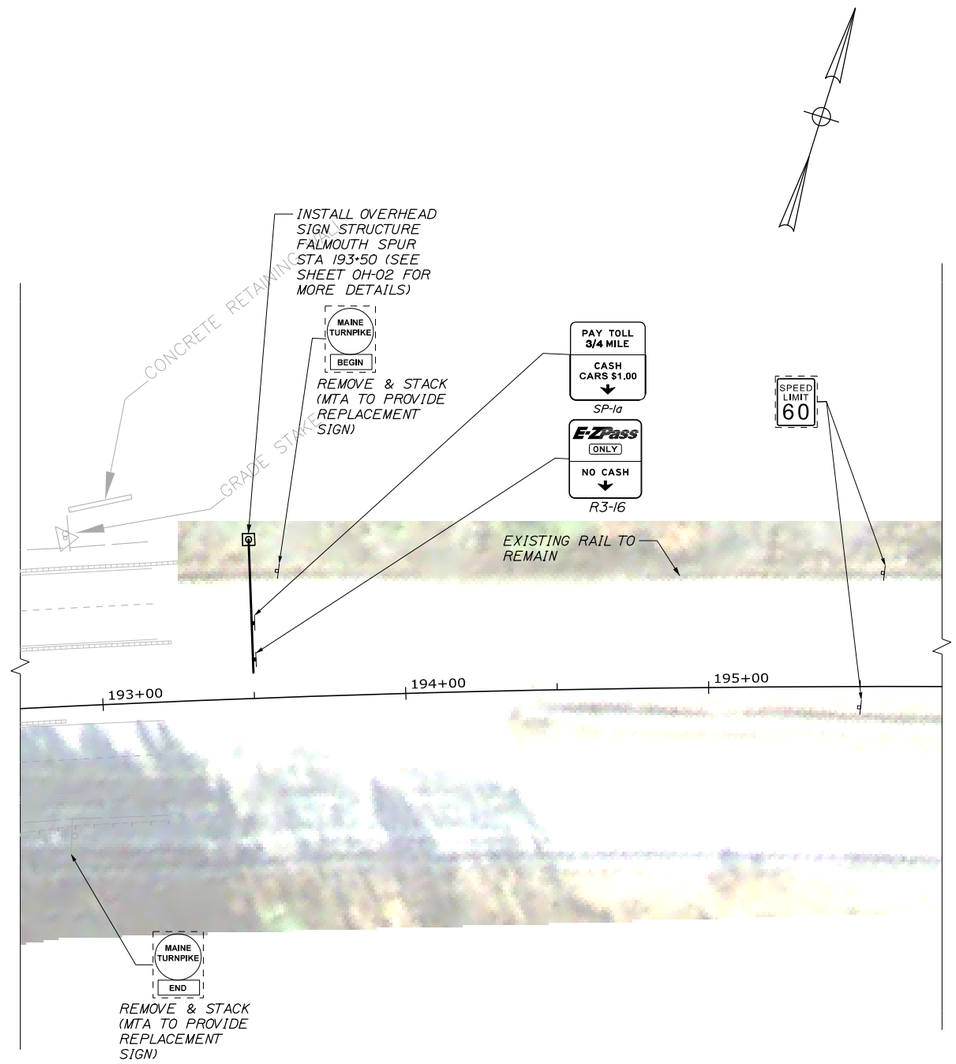

LEGEND

SWL	SOLID WHITE LINE		EXISTING SIGN
SYL	SOLID YELLOW LINE		PROPOSED SIGN
	PROPOSED SIGN		
	EXISTING SIGN		

Scale: 25 0 25 50
1" = 25'

No.	Revision	By	Date

Designed by: HNTB

CONSULTANT PROJECT MANAGER: R. Bruce Munger, P.E.

	By	Date		By	Date
Designed	CNP	05/15	Checked	EAR	05/15
Drawn	CNP	05/15	In Charge of	RAL	05/15

HNTB CORPORATION
340 County Road, Suite 6-C
Westbrook, ME 04092
TEL (207) 774-5155
FAX (207) 228-0909

MAINE TURNPIKE

THE GOLD STAR MEMORIAL HIGHWAY

MTA PROJECT MANAGER: William Yates

FALMOUTH SPUR TOLL PLAZA ORT CONVERSION

SIGNING AND STRIPING PLAN 11

SHEET NUMBER: SS-11

CONTRACT:2015.13

Filename: 056_ssplan11.dgn

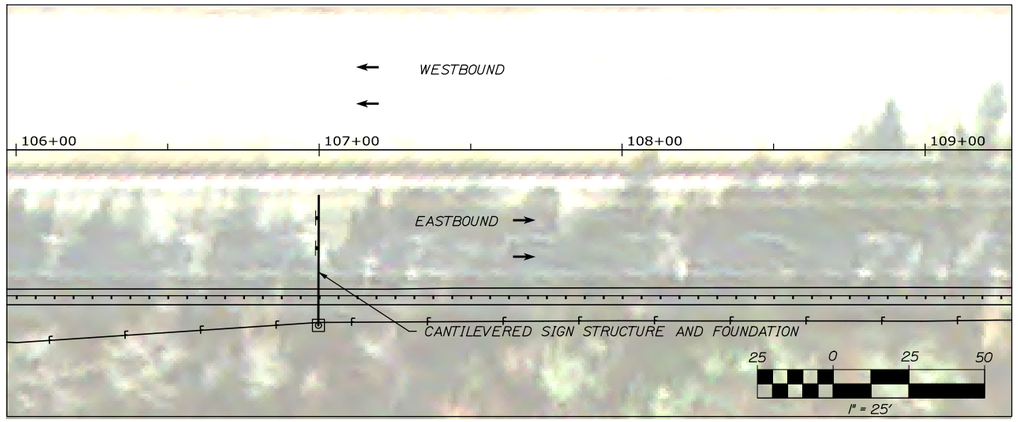

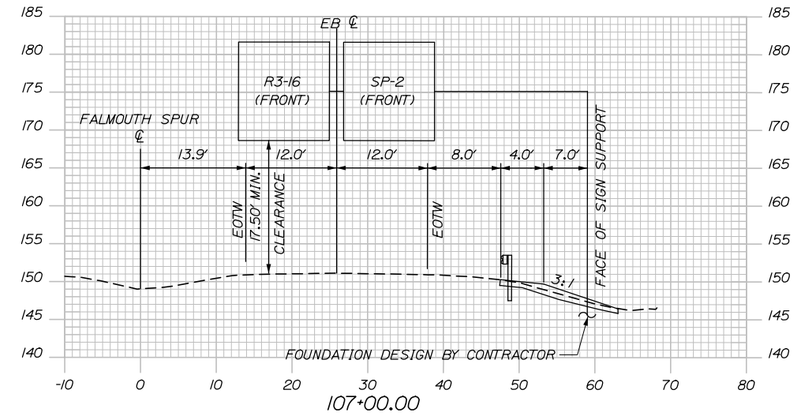

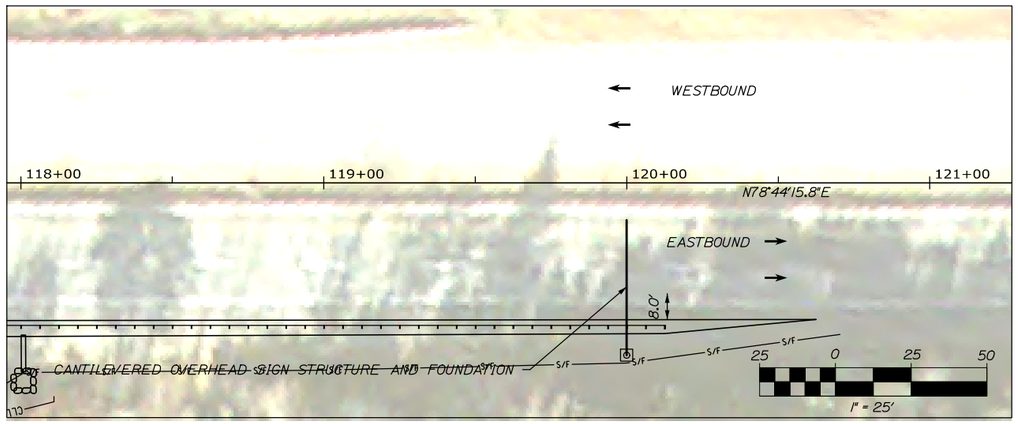

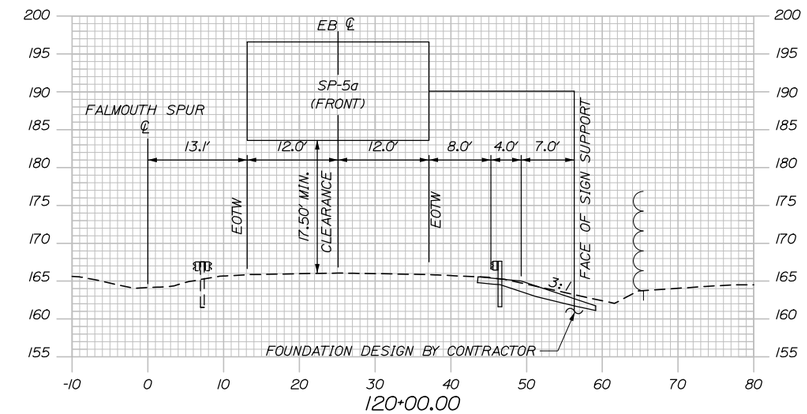

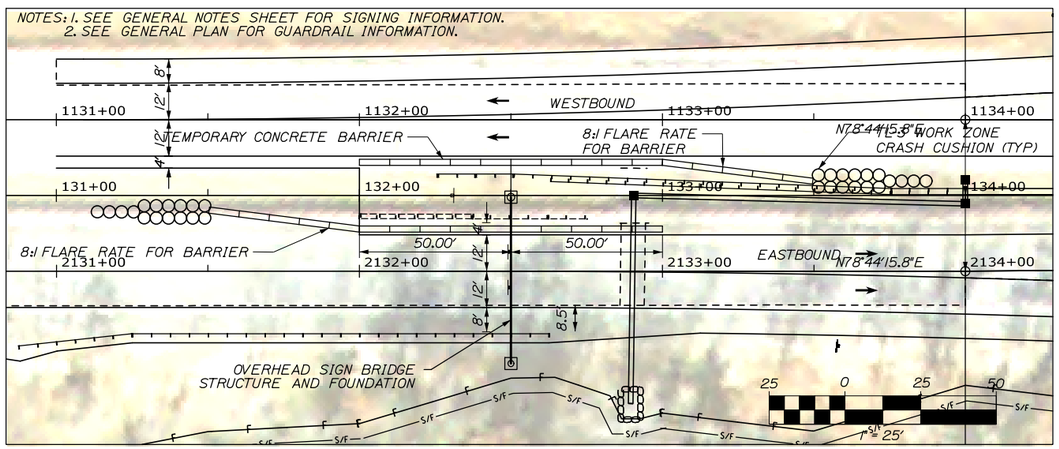

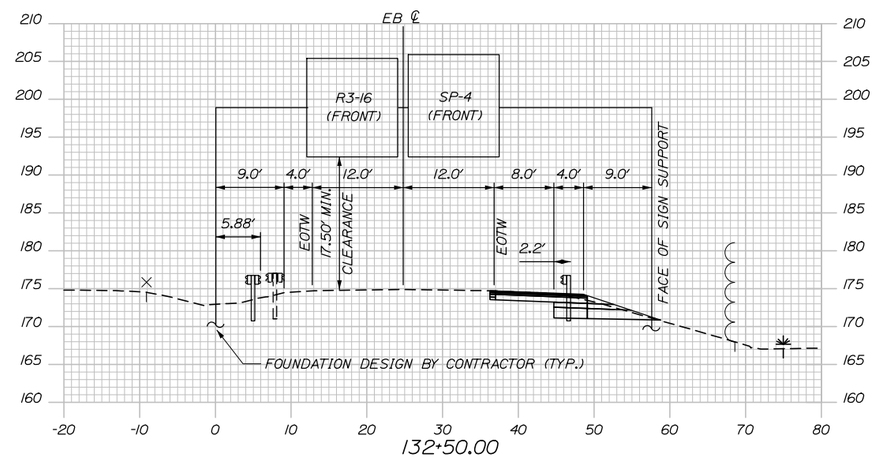

Date:5/15/2015

Filename: 057_OverheadSign01.dgn

Scale: NOTED ON PLAN

No.	Revision	By	Date

Designed by:

HNTB

CONSULTANT PROJECT MANAGER: R. Bruce Munger, P.E.

	By	Date		By	Date
Designed	CNP	05/15	Checked	HME	05/15
Drawn	CNP	05/15	In Charge of	RAL	05/15

HNTB CORPORATION
340 County Road, Suite 6-C
Westbrook, ME 04092
TEL (207) 774-5155
FAX (207) 228-0909

MAINE TURNPIKE

THE GOLD STAR MEMORIAL HIGHWAY

MTA PROJECT MANAGER: William Yates

FALMOUTH SPUR TOLL PLAZA
ORT CONVERSION

EASTBOUND OVERHEAD SIGNS

SHEET NUMBER: OH-01

CONTRACT:2015.13

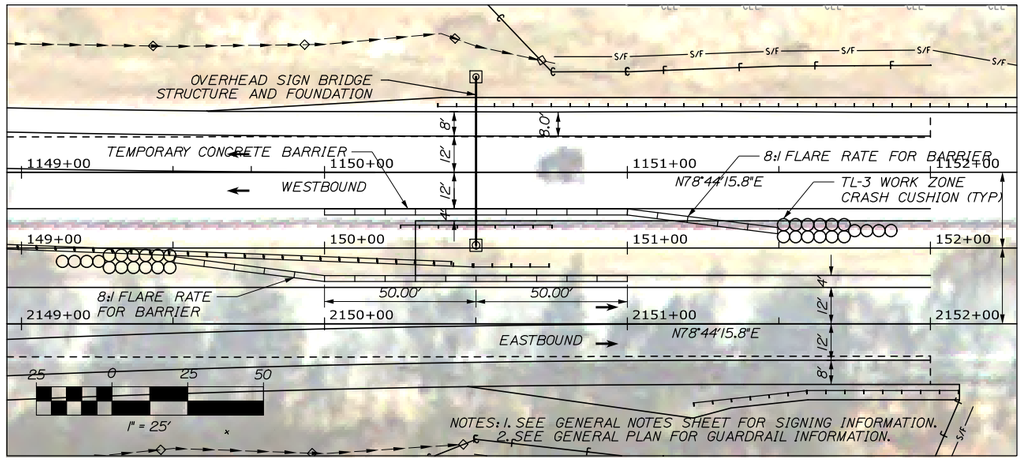

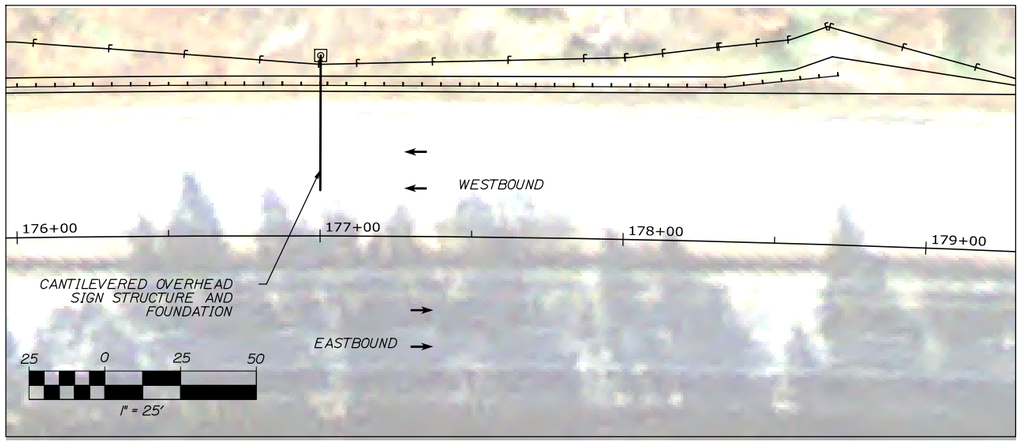

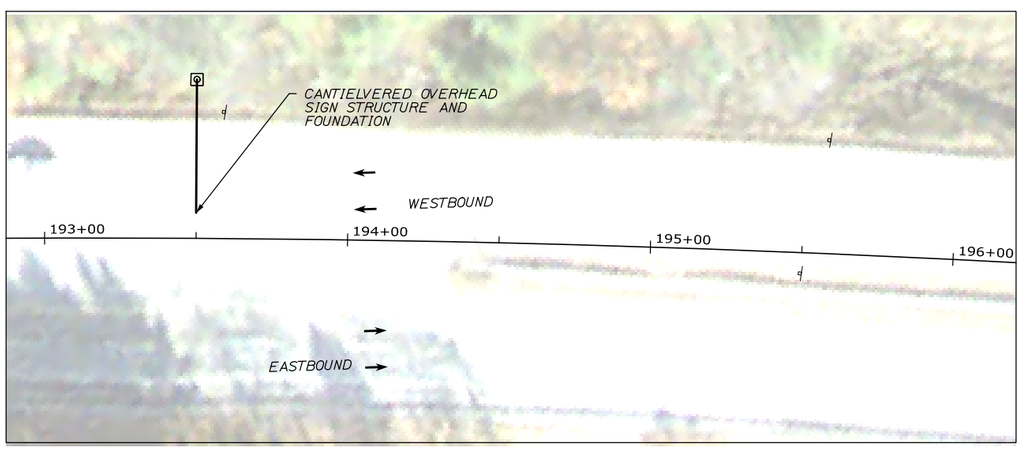

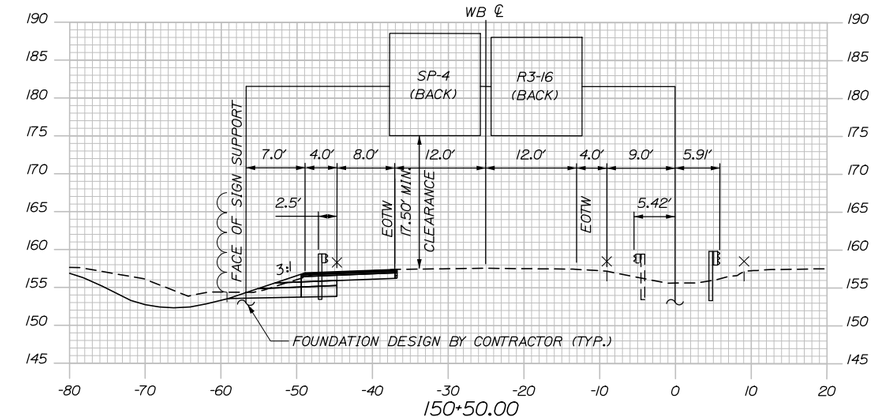

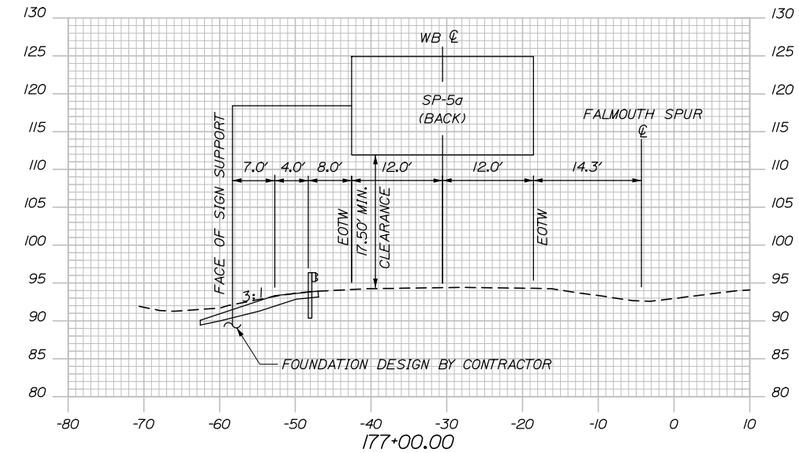

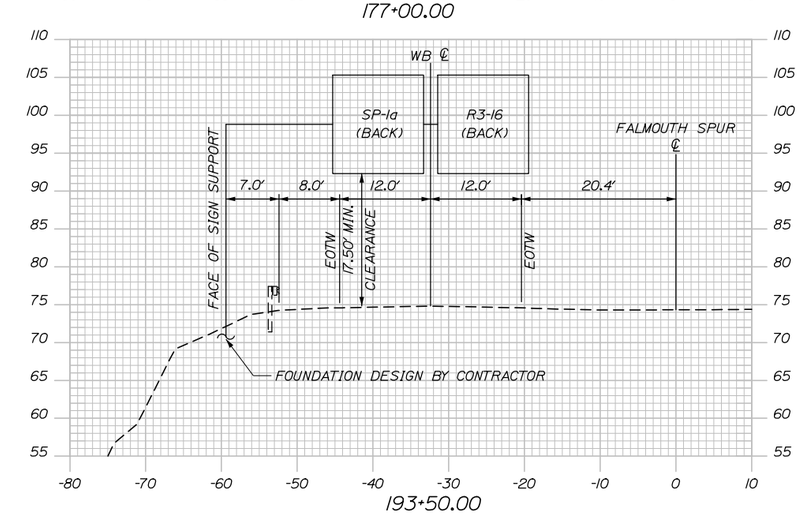

Date:5/15/2015

Filename: 058_OverheadSign02.dgn

Scale: NOTED ON PLAN

No.	Revision	By	Date

Designed by:

HNTB

CONSULTANT PROJECT MANAGER: R. Bruce Munger, P.E.

	By	Date		By	Date
Designed	CNP	05/15	Checked	HME	05/15
Drawn	CNP	05/15	In Charge of	RAL	05/15

HNTB CORPORATION
340 County Road, Suite 6-C
Westbrook, ME 04092
TEL (207) 774-5155
FAX (207) 228-0909

MAINE TURNPIKE

THE GOLD STAR MEMORIAL HIGHWAY

MTA PROJECT MANAGER: William Yates

FALMOUTH SPUR TOLL PLAZA
ORT CONVERSION

WESTBOUND OVERHEAD SIGNS

SHEET NUMBER: OH-02

CONTRACT:2015.13

REMOVE & STACK SIGN SUMMARY - POST MOUNTED

DESCRIPTION	QUANTITY	SIGN SIZE HEIGHT (IN)	SIGN SIZE WIDTH (IN)	SIGN SIZE AREA (SQ. FT.)	COLOR BACK-GROUND	COLOR LEGEND	DIRECTION (EB=EASTBOUND) (WB=WESTBOUND)	LOCATIONS
TOLL PLAZA 1 MILE	1	72	198	99.00	YELLOW	BLACK	EB	59+33 RT
TOLL PLAZA 1/2 MILE REDUCE SPEED	1	96	144	96.00	YELLOW	BLACK	WB	165+65 LT
RUMBLE STRIP AHEAD	4	48	48	16.00	YELLOW	BLACK	EB EB WB WB	121+35 RT 121+35 RT 156+83 LT 156+83 LT
REDUCED SPEED AHEAD	6	60	48	20.00	WHITE	BLACK	EB EB EB EB WB WB	116+18 RT 116+18 RT 133+08 RT 133+08 RT 147+44 RT 147+44 LT
PAY TOLL AHEAD	3	90	144	90.00	YELLOW	BLACK	EB EB WB	129+14 RT 129+14 RT 148+50 LT
CARS $1.00	2	12	144	12.00	YELLOW	BLACK	EB WB	59+33 RT 165+65 LT
	2	36	36	9.00	WHITE	RED/ BLACK	EB WB	137+73 RT 144+22 RT
PASSENGER CARS $1.00	2	42	108	90.00	YELLOW	BLACK	EB WB	136+18 RT 146+50 LT
SPEED LIMIT 35	2	60	48	20.00	WHITE	BLACK	EB WB	127+10 RT 148+93 LT
	2	48	36	12.00	WHITE	BLACK	WB EB	137+73 RT 144+22 RT
NO U TURN	2	18	24	3.00	WHITE	BLACK	EB WB	137+73 RT 144+22 RT
KEEP RIGHT EXCEPT TO PASS	1	48	36	12.00	WHITE	BLACK	WB	132+31 LT
CHECK BRAKES	3	36	42	10.50	YELLOW	BLACK	EB EB WB	118+82 RT 118+82 RT 159+22 RT
END TOLL PLAZA SPEED	1	36	24	6.00	WHITE	BLACK	WB	137+90 LT

REMOVE & STACK SIGN SUMMARY - POST MOUNTED (CONT.)

DESCRIPTION	QUANTITY	SIGN SIZE HEIGHT (IN)	SIGN SIZE WIDTH (IN)	SIGN SIZE AREA (SQ. FT.)	COLOR BACK-GROUND	COLOR LEGEND	DIRECTION (EB=EASTBOUND) (WB=WESTBOUND)	LOCATIONS
MAINE TURNPIKE BEGIN	1	48	24	8.00	GREEN WHITE	WHITE BLACK	WB	193+59 LT
MAINE TURNPIKE END	1	48	24	8.00	GREEN WHITE	WHITE BLACK	EB	192+88 RT
DO NOT ENTER	4	48	48	16.00	RED	WHITE	WB WB EB EB	137+39 RT 137+39 LT 144+43 LT 144+43 LT
WRONG WAY	4	30	42	8.75	RED	WHITE	WB WB EB EB	136+41 RT 136+41 RT 145+69 LT 145+69 LT
	2	48	48	16.00	YELLOW	BLACK	WB WB	161+53 LT 161+53 RT
NO PARKING	3	30	24	5.00	RED	WHITE	WB WB WB	137+28 LT 138+33 LT 139+23 LT
PROHIBITED ON TURNPIKE	1	36	30	7.5	WHITE	BLACK	WB	145+69 LT
MAIN TURNPIKE The Maine Gold Star ★ Memorial Highway DEDICATED 1965	1	108	72	54.00	RED/ WHITE	WHITE/ BLACK	WB	136+50 LT
PLEASE STAY OFF SEPTIC SYSTEM	2	18	24	3.00	WHITE	BLACK	WB	139+85 LT 140+33 LT
	2	36	36	9.00	YELLOW	BLACK	EB WB	137+35 RT 144+43 LT

* SIGN IS MOUNTED ON UTILITY POLE

REMOVE & STACK SIGN SUMMARY - CANOPY MOUNTED

DESCRIPTION	QUANTITY	SIGN SIZE HEIGHT (IN)	SIGN SIZE WIDTH (IN)	SIGN SIZE AREA (SQ. FT.)	COLOR BACK-GROUND	COLOR LEGEND	DIRECTION (EB=EASTBOUND) (WB=WESTBOUND)	LOCATIONS
E-ZPass OTHERS PROHIBITED	4	30	42	8.75	PURPLE	WHITE	EB EB WB WB	LANE 4 LANE 5 LANE 2 LANE 3

NOTES:

1. EXISTING WOOD AND METAL POSTS TO BE REMOVED SHALL BE DELIVERED TO THE AUTHORITY'S SIGN SHOP.

2. DEMOUNT POLES AND PROPOSED POLES AND CONCRETE FOUNDATIONS SHALL BE PAID FOR UNDER THEIR APPROPRIATE PAY ITEMS.

3. THE EXISTING E-ZPASS CANOPY SIGN MOUNTED ABOVE LANE 3 AND 4 ARE FLIP SIGNS.

Date:5/15/2015

Filename: 059_Sign Summary1.dgn

Scale:

No.	Revision	By	Date

Designed by: HNTB

CONSULTANT PROJECT MANAGER: R. Bruce Munger, P.E.

	By	Date		By	Date
Designed	CNP	05/15	Checked	EAR	05/15
Drawn	CNP	05/15	In Charge of	RAL	05/15

HNTB CORPORATION
340 County Road, Suite 6-C
Westbrook, ME 04092
TEL (207) 774-5155
FAX (207) 228-0909

MAINE TURNPIKE

THE GOLD STAR MEMORIAL HIGHWAY

MTA PROJECT MANAGER: William Yates

FALMOUTH SPUR TOLL PLAZA
ORT CONVERSION

SIGN SUMMARY - REMOVE & STACK

SHEET NUMBER: SSUM-01

CONTRACT:2015.13

REMOVE & RESET SIGN SUMMARY

DESCRIPTION	EXISTING								PROPOSED									
	SIGN SIZE			NUMBER AND TYPE OF POSTS	COLOR		DIRECTION (EB=EASTBOUND) (WB=WESTBOUND)	LOCATION	NUMBER OF POSTS	POST SIZE	HEIGHT OF POST		FOUNDATION SIZE AND TYPE	BREAKAWAY DEVICE	DIRECTION (EB=EASTBOUND) (WB=WESTBOUND)	LOCATION	OFFSET (FROM BASELINE TO SIGN CENTER)	PAY ITEM NUMBER
	HEIGHT (IN)	WIDTH (IN)	AREA (SQ. FT.)		BACK-GROUND	LEGEND					LEFT (FEET)	RIGHT (FEET)						
MAINLINE SIGN #1	60	48	20.00	1 STEEL	WHITE	BLACK	EB	STA 127+10	1	W 6 X 15	10.0'	N/A	18" DIAM	YES	EB	STA 138+00	83' RT	645.501
MAINLINE SIGN #2	36	48	12.00	2 WOOD	WHITE	BLACK	EB	STA 136+17	1	W 6 X 9	9.0'	N/A	18" DIAM	YES	EB	STA 138+91	87' RT	645.502
MAINLINE SIGN #3	48	60	20.00	LIGHT POST	PURPLE	WHITE	EB	STA 145+60	1	W 6 X 15	10.0'	N/A	18" DIAM	YES	EB	STA 145+72	80' RT	645.503
MAINLINE SIGN #4	60	48	20.00	1 WOOD	WHITE	BLACK	EB	STA 148+93	1	W 6 X 15	11.25'	N/A	18" DIAM	YES	EB	STA 153+00	56' RT	645.504
MAINLINE SIGN #5	48	96	32.00	2 STEEL	WHITE	BLACK	WB	STA 153+88	2	W 8 X 18	10.0'	12.0'	24" DIAM	YES	WB	STA 154+58	59' LT	645.505
MAINLINE SIGN #6	96	120	80.00	2 STEEL	GREEN	PURPLE/ WHITE	WB	STA 152+38	2	W 8 X 18	10.25'	11.75'	24" DIAM	YES	WB	STA 148+00	61' LT	645.506
MAINLINE SIGN #7	36	48	12.00	1 STEEL	WHITE	BLACK	WB	STA 146+50	1	W 6 X 9	7.5'	N/A	18" DIAM	YES	WB	STA 143+50	91' LT	645.507
MAINLINE SIGN #8	60	48	20.00	1 WOOD	WHITE	BLACK	WB	STA 148+94	1	W 6 X 15	9.0'	N/A	18" DIAM	YES	WB	STA 144+50	81' LT	645.508
MAINLINE SIGN #9	60	48	20.00	1 WOOD	YELLOW/ WHITE	BLACK	WB	STA 142+02	1	W 6 X 15	7.5'	N/A	18" DIAM	YES	WB	STA 142+31	99' LT	645.509
MAINLINE SIGN #10	36	36	9.00	LIGHT POST	YELLOW	BLACK	WB	STA 141+73	1	WOOD POST 6 X 6	7.0'	N/A	-	YES	WB	STA 142+05	94' LT	645.109

Date:5/15/2015

Filename: 060_Sign Summary2.dgn

Scale:

No.	Revision	By	Date

Designed by:

HNTB

CONSULTANT PROJECT MANAGER: R. Bruce Munger, P.E.

	By	Date		By	Date
Designed	CNP	05/15	Checked	EAR	05/15
Drawn	CNP	05/15	In Charge of	RAL	05/15

HNTB CORPORATION
340 County Road, Suite 6-C
Westbrook, ME 04092
TEL (207) 774-5155
FAX (207) 228-0909

MAINE TURNPIKE

THE GOLD STAR MEMORIAL HIGHWAY

MTA PROJECT MANAGER: William Yates

FALMOUTH SPUR TOLL PLAZA
ORT CONVERSION

SIGN SUMMARY - REMOVE & RESET 1

SHEET NUMBER: SSUM-02

CONTRACT:2015.13

REMOVE & RESET SIGN SUMMARY

DESCRIPTION	EXISTING								PROPOSED									
	SIGN SIZE			NUMBER AND TYPE OF POSTS	COLOR		DIRECTION (EB=EASTBOUND) (WB=WESTBOUND)	LOCATION	NUMBER OF POSTS	POST SIZE	HEIGHT OF POST		FOUNDATION SIZE AND TYPE	BREAKAWAY DEVICE	DIRECTION (EB=EASTBOUND) (WB=WESTBOUND)	LOCATION	OFFSET (FROM BASELINE TO SIGN CENTER)	PAY ITEM NUMBER
	HEIGHT (IN)	WIDTH (IN)	AREA (SQ. FT.)		BACK-GROUND	LEGEND					LEFT (FEET)	RIGHT (FEET)						
MAINLINE SIGN #11	24	24	4.00	1 WOOD	GREEN	WHITE	WB	STA 140+39	1	WOOD POST 6 X 6	9.0'	N/A	-	YES	WB	STA 140+29	127' LT	645.109
MAINLINE SIGN #12	48	60	20.00	LIGHT POST	PURPLE	WHITE	WB	STA 136+42	1	W 6 X 15	10.0'	N/A	18" DIAM	YES	WB	STA 135+54	73' LT	645.512
MAINLINE SIGN #13	60	48	20.00	1 WOOD	WHITE	BLACK	WB	STA 133+65	1	W 6 X 15	10.0'	N/A	18" DIAM	YES	WB	STA 130+50	57' LT	645.513
MAINLINE SIGN #14	48	144	48.00	MOUNTED TO TOLL PLAZA	WHITE	BLACK	WB	STA 141+16	←		MOUNT TO	PLAZA	→		WB	STA 141+41 LANE 1	68' LT	645.514
MAINLINE SIGN #15	24	24	4	1 WOOD	GREEN	WHITE	WB	STA 139+73	1	WOOD POST 6 X 6	10.0'	N/A	-	YES	WB	STA 139+54	126' LT	645.109
MAINLINE SIGN #16	48	36	12.00	1 WOOD	WHITE	BLACK	EB	STA 36+00	1	W 6 X 9	11.0'	N/A	18" DIAM	YES	WB	STA 36+10	3' RT	645.516

Date:5/15/2015

Filename: 061_Sign Summary3.dgn

Scale:

No.	Revision	By	Date

Designed by:

HNTB

CONSULTANT PROJECT MANAGER: R. Bruce Munger, P.E.

	By	Date		By	Date
Designed	CNP	05/15	Checked	EAR	05/15
Drawn	CNP	05/15	In Charge of	RAL	05/15

HNTB CORPORATION
340 County Road, Suite 6-C
Westbrook, ME 04092
TEL (207) 774-5155
FAX (207) 228-0909

MAINE TURNPIKE

THE GOLD STAR MEMORIAL HIGHWAY

MTA PROJECT MANAGER: William Yates

FALMOUTH SPUR TOLL PLAZA
ORT CONVERSION

SIGN SUMMARY - REMOVE & RESET 2

SHEET NUMBER: SSUM-03

CONTRACT:2015.13

PROPOSED SIGN SUMMARY

IDENTIFICATION NUMBER	DESCRIPTION	QUANTITY	COLOR		SIGN SIZE			NUMBER OF POSTS	POST SIZE	HEIGHT OF POST*			FOUNDATION SIZE AND TYPE	BREAKAWAY DEVICE	DIRECTION (EB=EASTBOUND) (WB=WESTBOUND)	STATIONS	OFFSET (FROM BASELINE TO SIGN CENTER)	PAY ITEM NUMBER
			BACK-GROUND	LEGEND	HEIGHT (IN)	WIDTH (IN)	AREA (SQ. FT.)			LEFT (FEET)	CENTER (FEET)	RIGHT (FEET)						
D-1	NORTH 95 Augusta 1¼ MILE ↓	1	GREEN	WHITE	144	144	144	← MOUNT TO OVERHEAD STRUCTURE →							WB	81+00	22' LT	645.131
D-2	SOUTH 95 Boston 1¼ MILE ↓	1	GREEN	WHITE	144	144	144	← MOUNT TO OVERHEAD STRUCTURE →							WB	81+00	9' LT	645.131
M6-2	↗	2	WHITE	BLACK	15	21	2.19	← MOUNT WITH W13-1P →							EB WB	133+60 148+70	57' RT 59' LT	645.271
OMI-1		2	YELLOW	BLACK	30	30	6.25	← MOUNT TO POST →							EB WB	136+90 145+50	35' RT 33' LT	645.271
R2-1 (60)	SPEED LIMIT 60	2	WHITE	BLACK	60	48	20.00	← VARIABLE SPEED LIMIT SIGN MOUNT TO SPACE FRAME →							EB WB	141+45 140+93	ALONG ALIGNMENT CL	645.155
R3-16	E-ZPass ONLY NO CASH ↓	5	PURPLE YELLOW GREEN	WHITE BLACK WHITE	156	144	156.00	← MOUNT TO OVERHEAD STRUCTURE →							EB EB EB WB WB	80+67 107+00 132+50 150+50 193+50	22' RT 19' RT 18' RT 18' LT 25' LT	645.131 645.151 645.121 645.121 645.154
SP-1	PAY TOLL 1 MILE CASH CARS $1.00 ↓	1	YELLOW GREEN	BLACK WHITE	156	144	156.00	← MOUNT TO OVERHEAD STRUCTURE →							EB	80+69	34' RT	645.131
SP-1a	PAY TOLL 3/4 MILE CASH CARS $1.00 ↓	1	YELLOW GREEN	BLACK WHITE	156	144	156.00	← MOUNT TO OVERHEAD STRUCTURE →							WB	193+50	40' LT	645.154
SP-2	PAY TOLL 1/2 MILE CASH CARS $1.00 ↓	1	YELLOW GREEN	BLACK WHITE	156	144	156.00	← MOUNT TO OVERHEAD STRUCTURE →							EB	107+00	32' RT	645.151
SP-3	NEED TO PAY A TOLL? CALL 1-888-MTA-PASS	2	BLUE	WHITE	96	162	108.00	2	W 8 X 18	9.5' 8.8'	N/A	8.2' 10.8'	24" DIAM	YES	WB EB	127+38 161+00	57' LT 57' RT	645.251
SP-4	STOP AHEAD PAY TOLL CASH CARS $1.00 ↗	2	YELLOW GREEN	BLACK WHITE	162	144	162.00	← MOUNT TO OVERHEAD STRUCTURE →							EB WB	132+50 150+50	31' RT 32' LT	645.121 645.121

Date:5/15/2015

Filename: 062_Sign Summary4.dgn

Scale:

No.	Revision	By	Date

Designed by:

HNTB

CONSULTANT PROJECT MANAGER: R. Bruce Munger, P.E.

	By	Date		By	Date
Designed	CNP	05/15	Checked	EAR	05/15
Drawn	CNP	05/15	In Charge of	RAL	05/15

HNTB CORPORATION
340 County Road, Suite 6-C
Westbrook, ME 04092
TEL (207) 774-5155
FAX (207) 228-0909

MAINE TURNPIKE

THE GOLD STAR MEMORIAL HIGHWAY

MTA PROJECT MANAGER: William Yates

FALMOUTH SPUR TOLL PLAZA
ORT CONVERSION

SIGN SUMMARY - PROPOSED 1

SHEET NUMBER: SSUM-04

CONTRACT:2015.13

PROPOSED SIGN SUMMARY

IDENTIFICATION NUMBER	DESCRIPTION	QUANTITY	COLOR		SIGN SIZE			NUMBER OF POSTS	POST SIZE	HEIGHT OF POST*			FOUNDATION SIZE AND TYPE	BREAKAWAY DEVICE	DIRECTION (EB=EASTBOUND) (WB=WESTBOUND)	LOCATION	OFFSET (FROM BASELINE TO SIGN CENTER)	PAY ITEM NUMBER
			BACK-GROUND	LEGEND	HEIGHT (IN)	WIDTH (IN)	AREA (SQ. FT.)			LEFT (FEET)	CENTER (FEET)	RIGHT (FEET)						
SP-5a	PAY TOLL XX MILE E-ZPass ONLY CASH NO CASH	2	YELLOW GREEN	BLACK WHITE	156	288	312.00	MOUNT TO OVERHEAD STRUCTURE							EB WB	120+00 177+00	25' RT 26' LT	645.152 645.153
SP-6	ANY VEHICLE CASH/RECEIPTS	2	WHITE	BLACK	48	144	48	MOUNT TO PLAZA							EB WB	2140+84 LANE 2 1141+41 LANE 7	62' RT 65' LT	645.271
SP-7	DO NOT STOP	12	WHITE	BLACK	36	24	6.00	MOUNT TO BARRIER; MOUNTING HARDWARE INCIDENTAL TO SIGN						NO NO NO NO NO NO NO NO NO NO NO NO	EB EB EB EB EB EB WB WB WB WB WB WB	137+50 137+50 139+00 139+00 140+25 140+25 142+00 142+00 143+50 143+50 145+00 145+00	CL OF BARRIER CL OF BARRIER CL OF BARRIER CL OF BARRIER CL OF BARRIER CL OF BARRIER CL OF BARRIER CL OF BARRIER CL OF BARRIER CL OF BARRIER CL OF BARRIER CL OF BARRIER	645.271
								1	POST ASSEMBLY FOR SIGN (INCLUDED IN PAYMENT FOR ITEM 607.41)	N/A	1.25' (FROM BOTTOM SIGN TO TOP BARRIER)	N/A	N/A					
SP-7w	DO NOT STOP	4	WHITE	BLACK	36	54	13.5	MOUNT TO SPACE FRAME							EB EB WB WB	141+45 141+45 140+93 140+93	17' RT 17' RT 20' RT 20' RT	645.271
W4-3		2	YELLOW	BLACK	48	48	16.00	1	W 6 X 9	N/A	10.2' 9.2'	N/A	18" DIAM	YES YES	WB EB	134+30 148+62	68' LT 61' RT	645.161 & 645.271
W9-6	PAY TOLL 2 MILES CARS $1.00	1	YELLOW	BLACK	66	96	44.00	2	W 8 X 18	8.75'	N/A	9.75'	24" DIAM	YES	EB	36+00	60' RT	645.162 & 645.271
W9-6a	STOP AHEAD PAY TOLL CARS $1.00	2	YELLOW	BLACK	66	114	52.25	2	W 8 X 18	9.0' 10.9'	N/A	10.4' 9.5'	24" DIAM	YES	EB WB	136+98 145+63	74' RT 77' LT	645.162 & 645.271
W12-1		2	YELLOW	BLACK	36	36	9.00	MOUNT TO POST							EB WB	136+90 145+50	35' RT 33' LT	645.271
W13-1P	35 MPH	2	YELLOW	BLACK	30	30	6.25	MOUNT TO POST							EB WB	133+60 148+70	57' RT 59' LT	645.271

*FOR SIGN SP-5a THE XX IS TO BE REPLACED WITH 1/2 AT STA 177+00 AND 1/4 AT STA 120+00

Date:5/15/2015

Filename: 063_Sign Summary5.dgn

Scale:

No.	Revision	By	Date

Designed by:

HNTB

CONSULTANT PROJECT MANAGER: R. Bruce Munger, P.E.

	By	Date		By	Date
Designed	CNP	05/15	Checked	EAR	05/15
Drawn	CNP	05/15	In Charge of	RAL	05/15

HNTB CORPORATION
340 County Road, Suite 6-C
Westbrook, ME 04092
TEL (207) 774-5155
FAX (207) 228-0909

MAINE TURNPIKE

THE GOLD STAR MEMORIAL HIGHWAY

MTA PROJECT MANAGER: William Yates

FALMOUTH SPUR TOLL PLAZA
ORT CONVERSION

SIGN SUMMARY - PROPOSED 2

SHEET NUMBER: SSUM-05

CONTRACT:2015.13

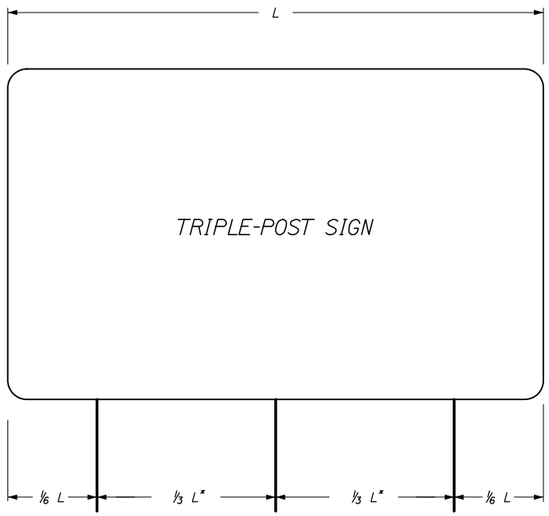

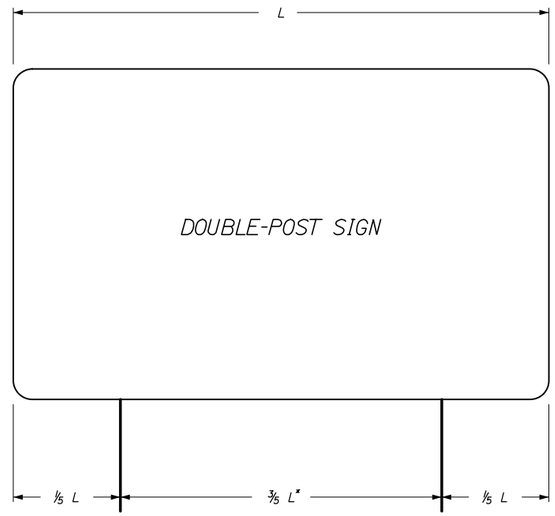

* - A MINIMUM 7 FEET REQUIRED WHEN INSTALLED ON BREAKAWAY DEVICES

POLE SPACING DETAIL
N.T.S.

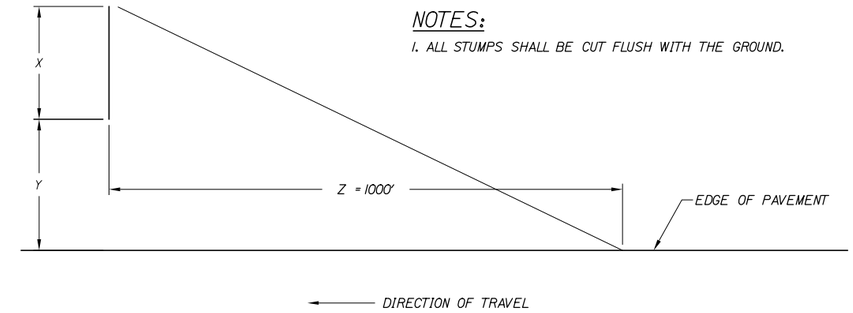

NOTES:
1. ALL STUMPS SHALL BE CUT FLUSH WITH THE GROUND.

WHERE:

X = WIDTH OF SIGN + 10'
Y = OFFSET TO EDGE OF SIGN FROM EDGE OF PAVEMENT
Z = DISTANCE FROM FACE OF SIGN TO A POINT ON THE EDGE OF PAVEMENT 1000' BACK

CLEARING DETAIL FOR MAINLINE SIGN INSTALLATION
NO SCALE

SINGLE SUPPORT SIGNS

FOUNDATION DIAMETER	SIGN AREA (A)	SIGN WIDTH (W)	POST SIZE	BASE PLATE (1) (3)	MATERIAL	ANCHOR BOLTS (2)	BOLT CIRCLE	MAXIMUM MOUNTING HEIGHT
	A < 4 FT^2		U CHANNEL POST					12 FEET TO SIGN CENTER
	4 < A <= 10 FT^2		WOOD POST 6"X6"					
18"	10 < A <= 16 FT^2	W=4'-0" MAX. BUT INCLUDES 5'-0" YIELD SIGN	W6X9	12"X12"X1" 41 LBS.	A36	1" ϕ X 3'-0"	12"	
18"	16 < A <= 25 FT^2	W=5'-0" MAX	W6X15	12"X12"X1" 41 LBS.	A36	1" ϕ X 3'-0"	12"	
24"	25 < A <= 42 FT^2	W=7'-0" MAX	W8X24	14"X14"X1" 55 LBS.	A36	1-1/4" ϕ X 3'-6"	14"	

MULTIPLE SUPPORT SIGNS

24"	TO 60 FT^2/POST		W8X18	14"X14"X1" 55 LBS.	A36	1-1/4" ϕ X 3'-6"	14"	20 FEET TO SIGN CENTER
24"	60-85 FT^2/POST		W10X22	12"X17"X1-1/4" 72 LBS.	A36	1-1/4" ϕ X 3'-6"	15"	
30"	85-110 FT^2/POST		W12X26	13"X19"X1-1/4" 87 LBS.	A36	1-1/2" ϕ X 4'-0"	15"	
30"	110-135 FT^2/POST		W14X30	14"X21"X1-1/4" 104 LBS.	A36	1-1/2" ϕ X 4'-0"	19"	

GENERAL NOTES
1. BOLTS TO BE 50,000 PSI MINIMUM YIELD STRENGTH.

2. POST TO BASE PLATE WELD SHALL BE 5/16" FILLET WELD.

3. BASE PLATES AND H-BEAMS SHALL BE HOT DIPPED GALVANIZED AFTER FABRICATION IN ACCORDANCE WITH SECTION 720.06.

BREAKAWAY NOTES
1. ON 6"X6" WOOD POSTS, DRILL 3/4" DIAMETER HOLES AT RIGHT ANGLES TO ONE ANOTHER 4 INCHES ABOVE GROUND LEVEL TO MEET BREAKAWAY STANDARDS.

2. ON BREAKAWAY SUPPORTS, THE HINGE SHOULD BE A MINIMUM OF 7 FEET ABOVE THE FOUNDATION. NO PERMANENT SUPPLEMENTARY SIGNS SHALL BE ATTACHED BELOW THE HINGE.

3. A SINGLE POSTED SIGN REQUIRING A BREAKAWAY DEVICE SHALL NOT HAVE A HINGE.

REMOVE AND RESET GUIDE SIGN NOTES
1. EXISTING SIGN POST LENGTHS ARE APPROXIMATE AND SHALL BE FIELD VERIFIED BY THE CONTRACTOR IF THE POSTS ARE TO BE REUSED.

2. THE CONTRACTOR MAY REUSE EXISTING POLES, FOUNDATIONS AND BREAKAWAY DEVICES AT ANY SIGN LOCATION WHERE FEASIBLE.

3. PROPOSED POLE LENGTHS ARE MEASURED FROM THE TOP OF THE FOUNDATION TO THE TOP OF SIGN AND ARE APPROXIMATE. FINAL POST LENGTHS SHALL BE DETERMINED BY THE CONTRACTOR ONCE FOUNDATIONS ARE PLACED.

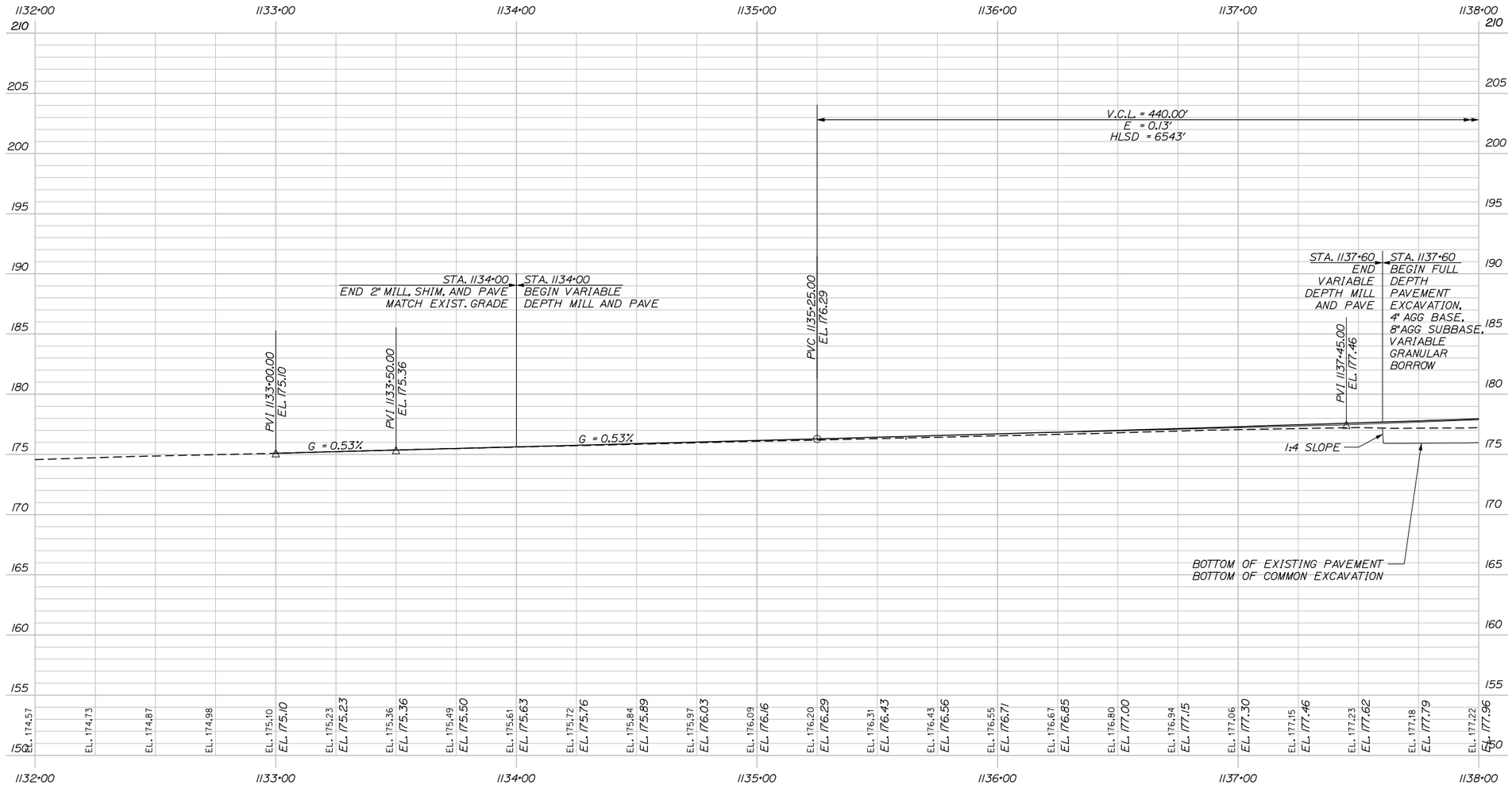

WESTBOUND ORT PROFILE

Date:5/15/2015

Filename: 065_Profile1.dgn

Scale: HORIZ: 25 0 25 50
VERT: 5 0 5 10

No.	Revision	By	Date

Designed by: HNTB

CONSULTANT PROJECT MANAGER: R. Bruce Munger, P.E.

	By	Date		By	Date
Designed	HME	05/15	Checked	TJW	05/15
Drawn	TJW	05/15	In Charge of	RAL	05/15

HNTB CORPORATION
340 County Road, Suite 6-C
Westbrook, ME 04092
TEL (207) 774-5155
FAX (207) 228-0909

MAINE TURNPIKE

THE GOLD STAR MEMORIAL HIGHWAY

MTA PROJECT MANAGER: William Yates

FALMOUTH SPUR TOLL PLAZA
ORT CONVERSION

PROFILE
WESTBOUND 1

SHEET NUMBER: PR-01

CONTRACT:2015.13

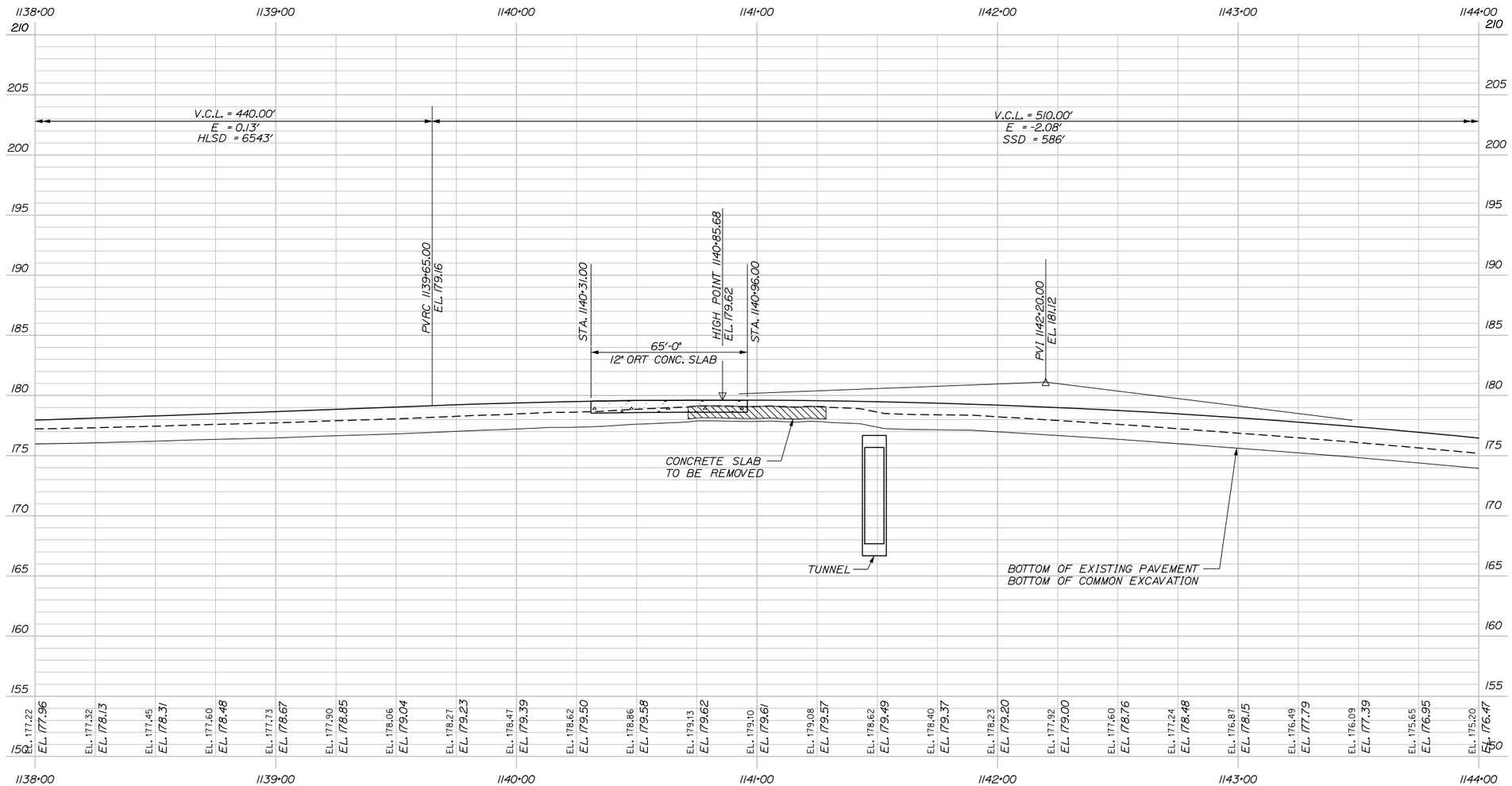

WESTBOUND ORT PROFILE

Date:5/15/2015

Filename: 066_Profile2.dgn

Scale: HORIZ: 25 0 25 50
VERT: 5 0 5 10

No.	Revision	By	Date

Designed by:

HNTB

CONSULTANT PROJECT MANAGER: R. Bruce Munger, P.E.

	By	Date		By	Date
Designed	HME	05/15	Checked	TJW	05/15
Drawn	TJW	05/15	In Charge of	RAL	05/15

HNTB CORPORATION
340 County Road, Suite 6-C
Westbrook, ME 04092
TEL (207) 774-5155
FAX (207) 228-0909

MAINE TURNPIKE

THE GOLD STAR MEMORIAL HIGHWAY

MTA PROJECT MANAGER: William Yates

FALMOUTH SPUR TOLL PLAZA
ORT CONVERSION

PROFILE
WESTBOUND 2

SHEET NUMBER: PR-02

CONTRACT:2015.13

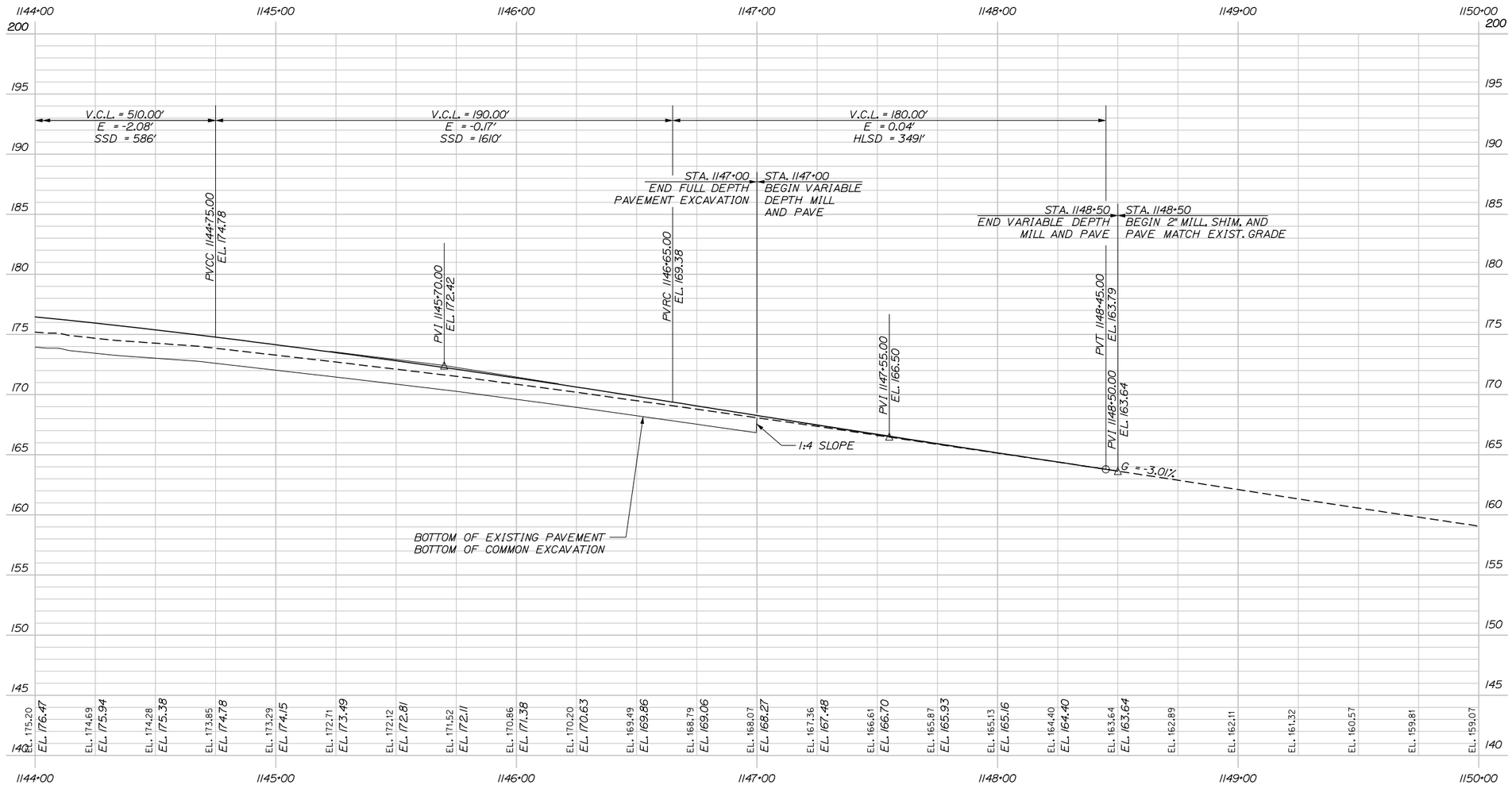

WESTBOUND ORT PROFILE

Date:5/15/2015

Filename: 067_Profile3.dgn

Scale: HORIZ: 25 0 25 50
VERT: 5 0 5 10

No.	Revision	By	Date

Designed by:

HNTB

CONSULTANT PROJECT MANAGER: R. Bruce Munger, P.E.

	By	Date		By	Date
Designed	HME	05/15	Checked	TJW	05/15
Drawn	TJW	05/15	In Charge of	RAL	05/15

HNTB CORPORATION
340 County Road, Suite 6-C
Westbrook, ME 04092
TEL (207) 774-5155
FAX (207) 228-0909

MAINE TURNPIKE

THE GOLD STAR MEMORIAL HIGHWAY

MTA PROJECT MANAGER: William Yates

FALMOUTH SPUR TOLL PLAZA
ORT CONVERSION

PROFILE
WESTBOUND 3

SHEET NUMBER: PR-03

CONTRACT:2015.13

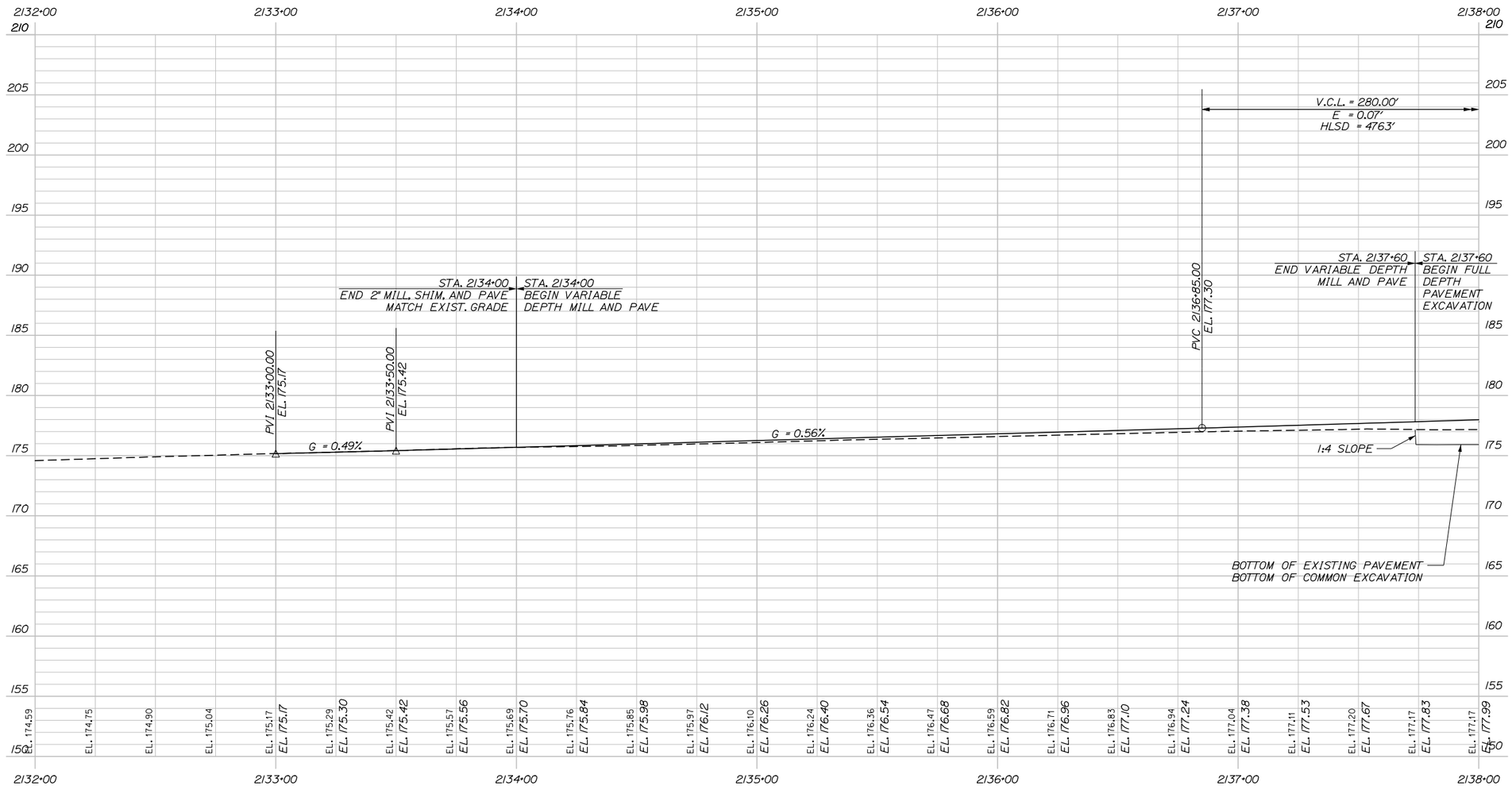

EASTBOUND ORT PROFILE

Date:5/15/2015

Filename: 068_Profile4.dgn

Scale: HORIZ: 25 0 25 50
VERT: 5 0 5 10

No.	Revision	By	Date

Designed by:

HNTB

CONSULTANT PROJECT MANAGER: R. Bruce Munger, P.E.

	By	Date		By	Date
Designed	HME	05/15	Checked	TJW	05/15
Drawn	TJW	05/15	In Charge of	RAL	05/15

HNTB CORPORATION
340 County Road, Suite 6-C
Westbrook, ME 04092
TEL (207) 774-5155
FAX (207) 228-0909

MAINE TURNPIKE

THE GOLD STAR MEMORIAL HIGHWAY

MTA PROJECT MANAGER: William Yates

FALMOUTH SPUR TOLL PLAZA
ORT CONVERSION

PROFILE
EASTBOUND 1

SHEET NUMBER: PR-04

CONTRACT:2015.13

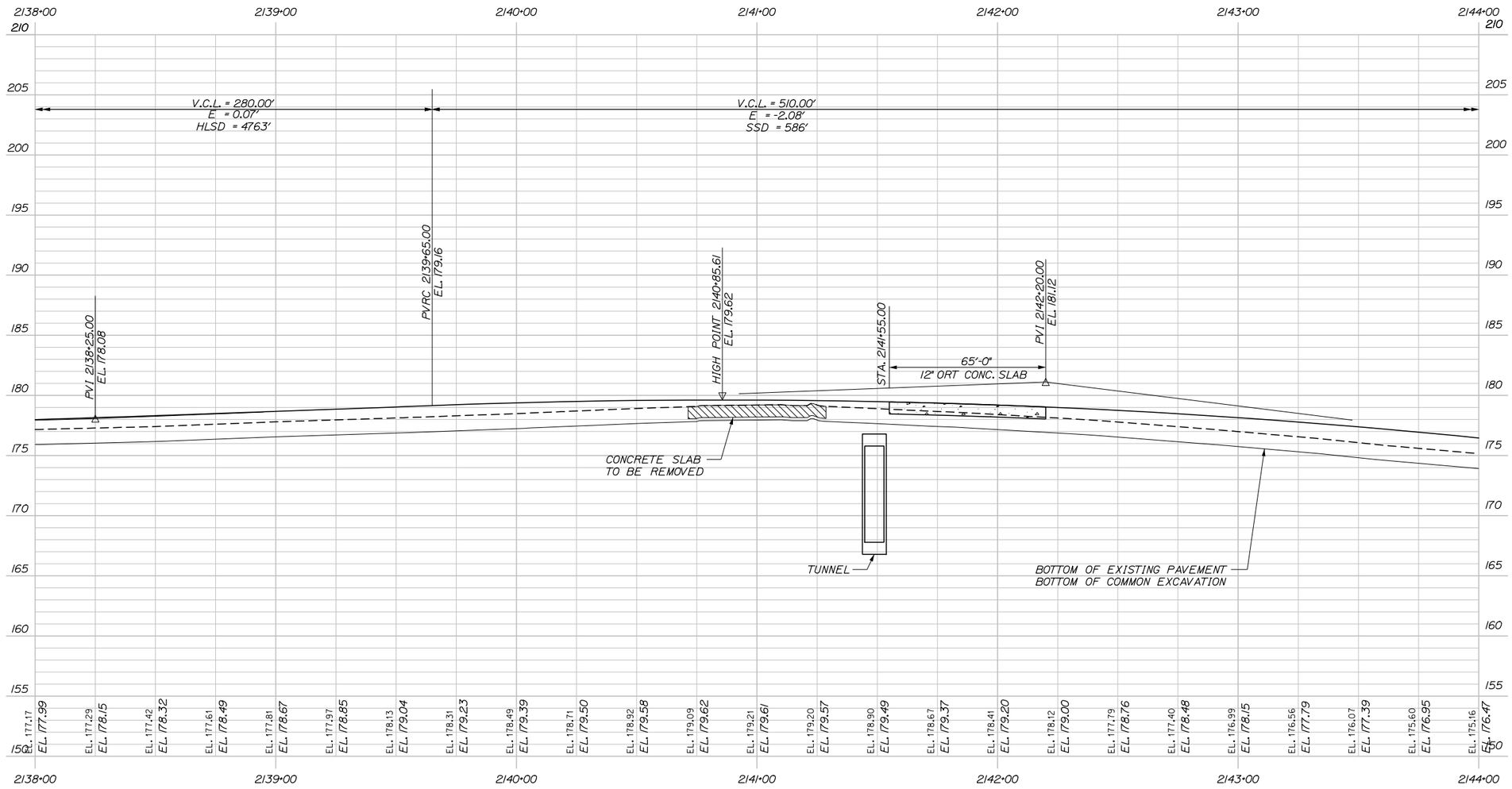

EASTBOUND ORT PROFILE

Date:5/15/2015

Filename: 069_Profile5.dgn

Scale: HORIZ: 25 0 25 50
VERT: 5 0 5 10

No.	Revision	By	Date

Designed by:

HNTB

CONSULTANT PROJECT MANAGER: R. Bruce Munger, P.E.

	By	Date		By	Date
Designed	HME	05/15	Checked	TJW	05/15
Drawn	TJW	05/15	In Charge of	RAL	05/15

HNTB CORPORATION
340 County Road, Suite 6-C
Westbrook, ME 04092
TEL (207) 774-5155
FAX (207) 228-0909

MAINE TURNPIKE

THE GOLD STAR MEMORIAL HIGHWAY

MTA PROJECT MANAGER: William Yates

FALMOUTH SPUR TOLL PLAZA
ORT CONVERSION

PROFILE
EASTBOUND 2

SHEET NUMBER: PR-05

CONTRACT:2015.13

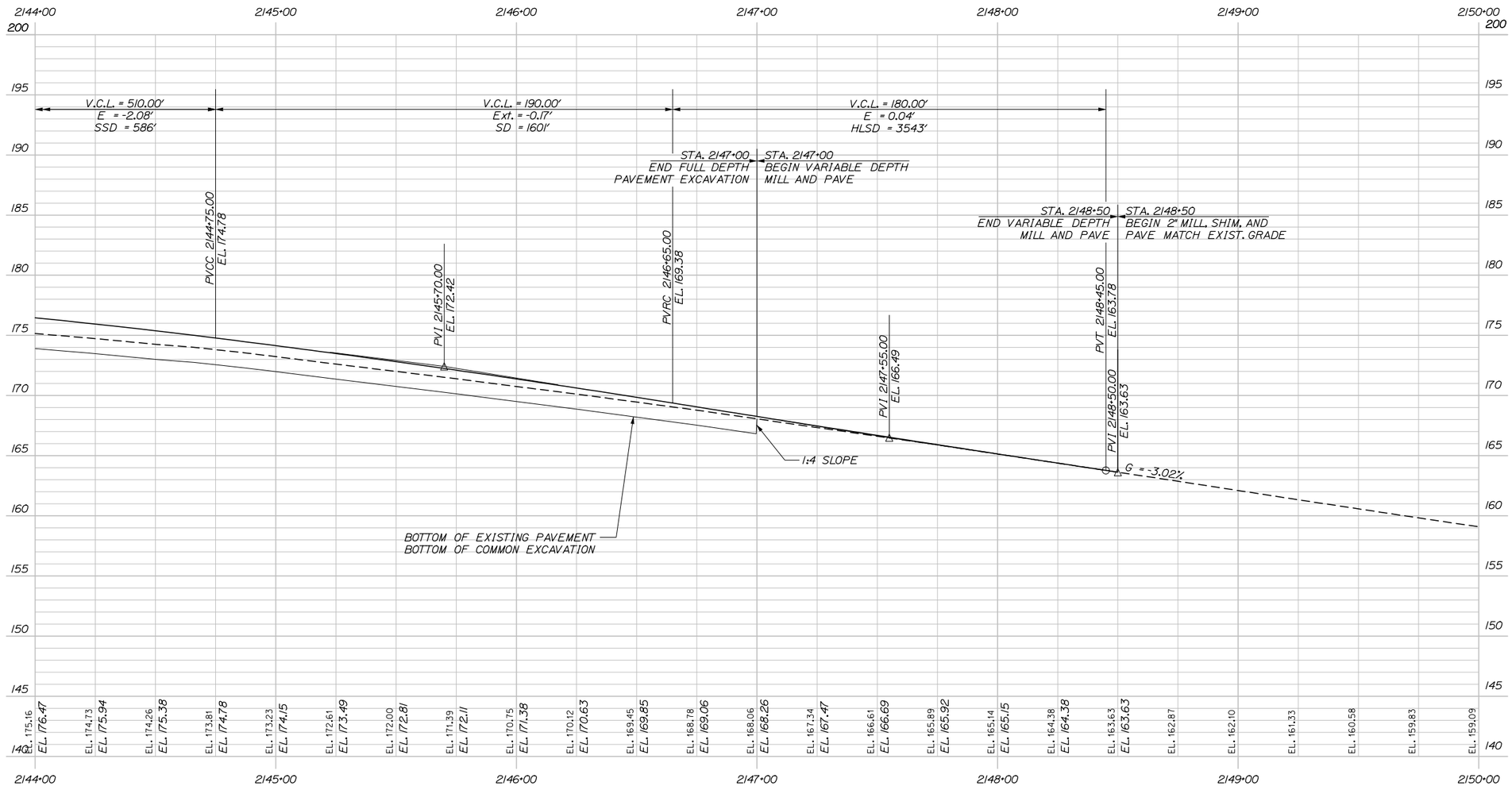

EASTBOUND ORT PROFILE

Date:5/15/2015

Filename: 070_Profile6.dgn

Scale: HORIZ: 25 0 25 50
VERT: 5 0 5 10

No.	Revision	By	Date

Designed by:

HNTB

CONSULTANT PROJECT MANAGER: R. Bruce Munger, P.E.

	By	Date		By	Date
Designed	HME	05/15	Checked	TJW	05/15
Drawn	TJW	05/15	In Charge of	RAL	05/15

HNTB CORPORATION
340 County Road, Suite 6-C
Westbrook, ME 04092
TEL (207) 774-5155
FAX (207) 228-0909

MAINE TURNPIKE

THE GOLD STAR MEMORIAL HIGHWAY

MTA PROJECT MANAGER: William Yates

FALMOUTH SPUR TOLL PLAZA
ORT CONVERSION

PROFILE
EASTBOUND 3

SHEET NUMBER: PR-06

CONTRACT:2015.13

100% SUBMISSION
MAY 5, 2015

C=175.44 CY
F=50.31 CY
G=31.04 CY
R=0.00 CY

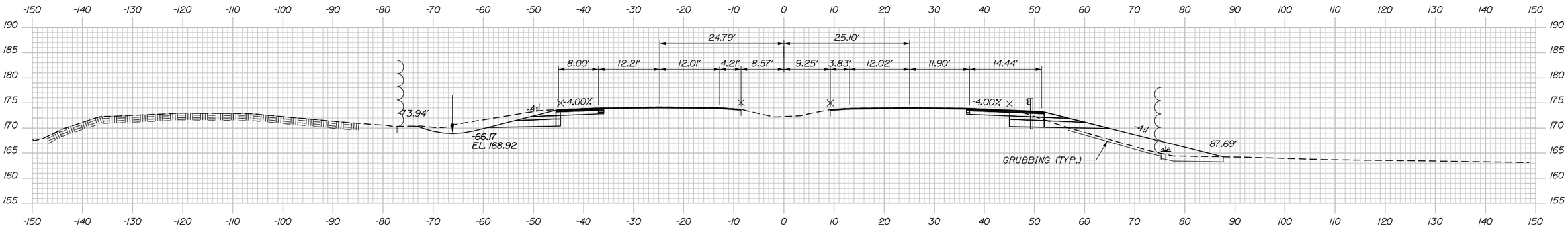

STA. 1131+00 WESTBOUND ℄
BEGIN 2" MILL, SHIM AND PAVE (ORT AND CASH LANE)
BEGIN FULL DEPTH RECONSTRUCTION (CASH LANE AND OUTSIDE SHOULDER)

131+00.00

C=135.89 CY
F=51.95 CY
G=33.27 CY
R=18.70 CY

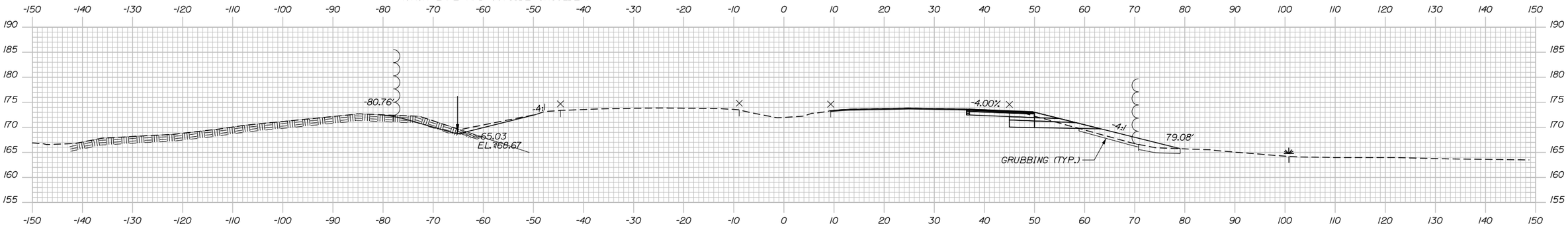

130+50.00

STA. 2130+17.63 EASTBOUND ℄
BEGIN 2" MILL, SHIM AND PAVE (ORT AND CASH LANE)
BEGIN FULL DEPTH RECONSTRUCTION (CASH LANE AND OUTSIDE SHOULDER)

C=52.83 CY
F=15.19 CY
G=17.10 CY
R=24.23 CY

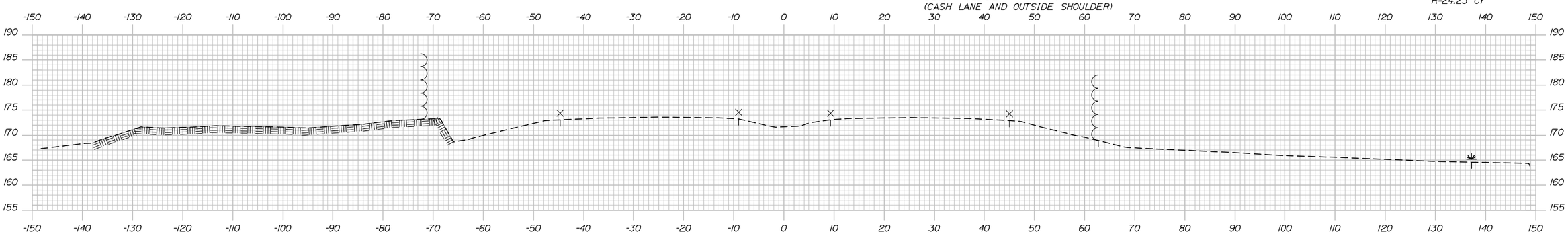

130+00.00

Date:5/15/2015

Filename: Xsect.dgn

No.	Revision	By	Date

Scale:

Designed by:

HNTB

CONSULTANT PROJECT MANAGER: R. Bruce Munger, P.E.

	By	Date		By	Date
Designed	HME	05/15	Checked	RBM	05/15
Drawn	MPC	05/15	In Charge of	RAL	05/15

HNTB CORPORATION
340 County Road, Suite 6-C
Westbrook, ME 04092
TEL (207) 774-5155
FAX (207) 228-0909

MAINE TURNPIKE

THE GOLD STAR MEMORIAL HIGHWAY

MTA PROJECT MANAGER: William Yates

FALMOUTH SPUR BARRIER TOLL PLAZA
ORT CONVERSION

CROSS SECTIONS
STA. 130+00 TO STA. 131+00

SHEET NUMBER: XS-01

CONTRACT:2015.13

100% SUBMISSION
MAY 5, 2015

C=186.26 CY
F=22.74 CY
G=40.33 CY
R=0.00 CY

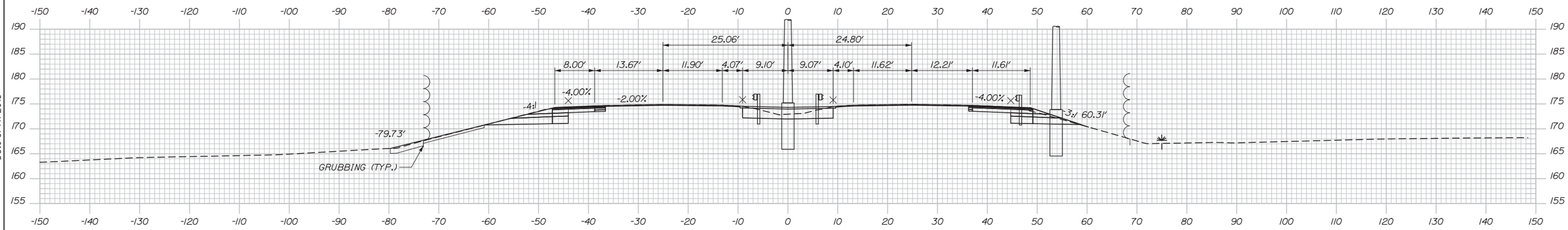

132+50.00

C=183.86 CY
F=8.97 CY
G=23.29 CY
R=0.00 CY

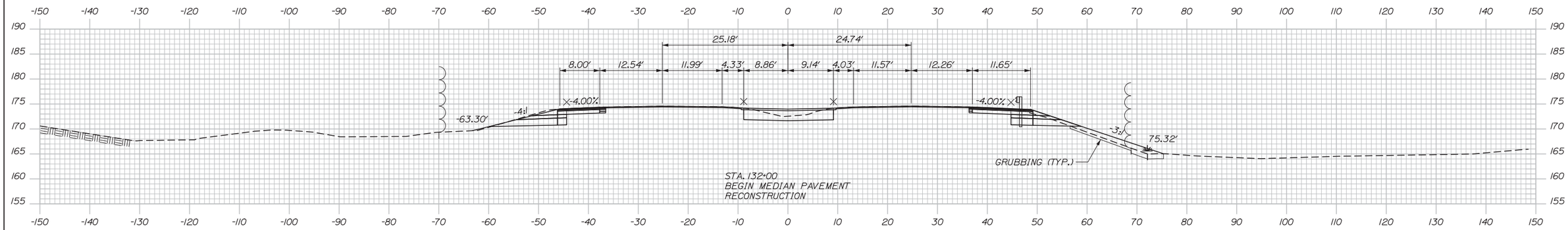

132+00.00

C=170.31 CY
F=19.05 CY
G=22.48 CY
R=0.00 CY

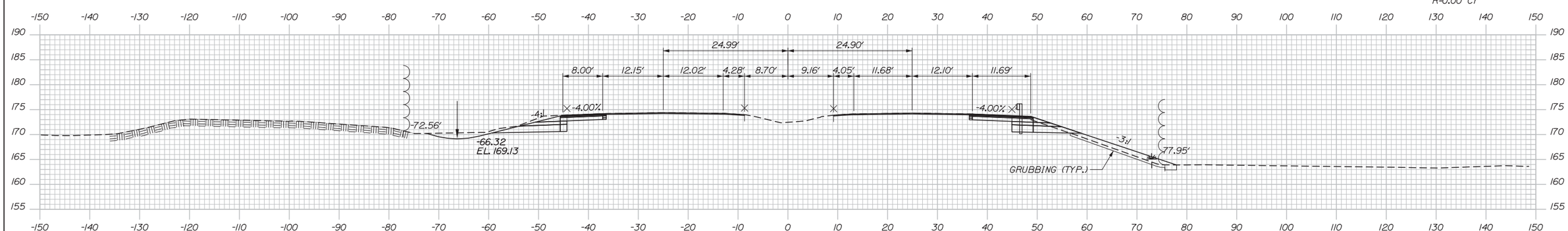

131+50.00

Date:5/14/2015

Filename: Xsect.dgn

Scale:

No.	Revision	By	Date

Designed by:

HNTB

CONSULTANT PROJECT MANAGER: R. Bruce Munger, P.E.

	By	Date		By	Date
Designed	HME	05/15	Checked	RBM	05/15
Drawn	MPC	05/15	In Charge of	RAL	05/15

HNTB CORPORATION
340 County Road, Suite 6-C
Westbrook, ME 04092
TEL (207) 774-5155
FAX (207) 228-0909

MAINE TURNPIKE

THE GOLD STAR MEMORIAL HIGHWAY

MTA PROJECT MANAGER: William Yates

FALMOUTH SPUR BARRIER TOLL PLAZA
ORT CONVERSION

CROSS SECTIONS
STA. 131+50 TO STA. 132+50

SHEET NUMBER: XS-02

CONTRACT:2015.13

100% SUBMISSION
MAY 5, 2015

Date:5/14/2015

C=254.17 CY
F=5.24 CY
G=18.62 CY
R=0.00 CY

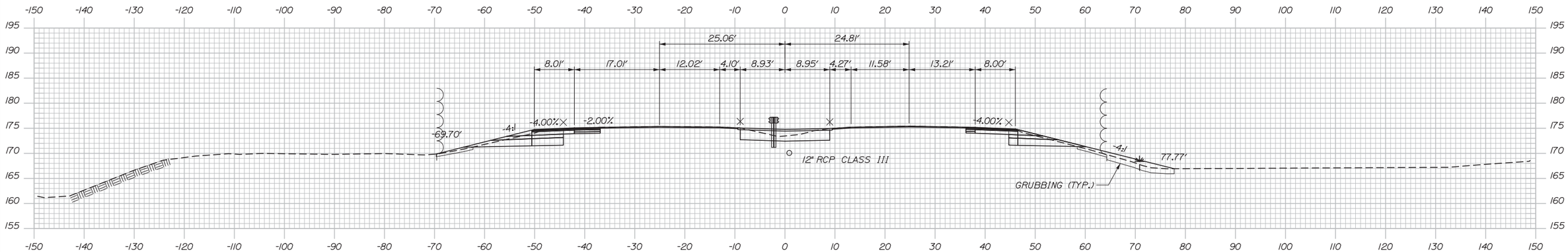

133+50.00

STA. 132+90.56, ℄ TO STA. 133+99.99, RT.
INSTALL 106' X 12" RCP CLASS III

C=186.48 CY
F=27.99 CY
G=47.17 CY
R=0.00 CY

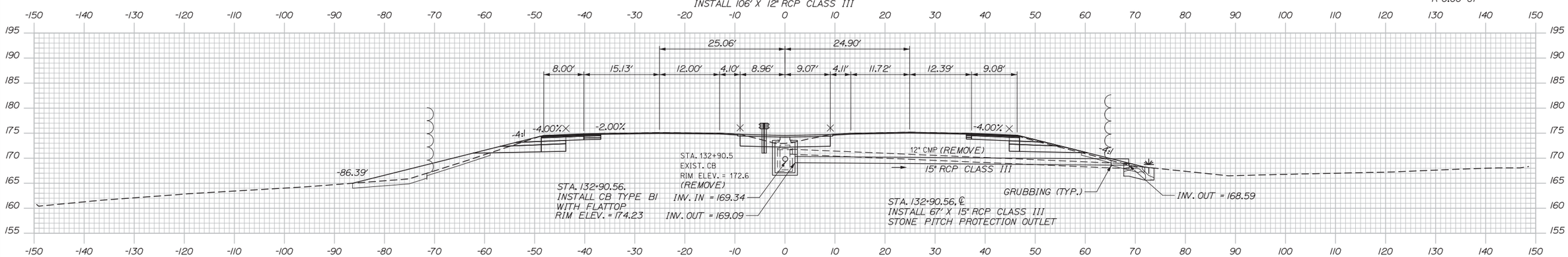

133+00.00

Filename: Xsect.dgn

Scale:

No.	Revision	By	Date

Designed by:

HNTB

CONSULTANT PROJECT MANAGER: R. Bruce Munger, P.E.

	By	Date		By	Date
Designed	HME	05/15	Checked	RBM	05/15
Drawn	MPC	05/15	In Charge of	RAL	05/15

HNTB CORPORATION
340 County Road, Suite 6-C
Westbrook, ME 04092
TEL (207) 774-5155
FAX (207) 228-0909

MAINE TURNPIKE

THE GOLD STAR MEMORIAL HIGHWAY

MTA PROJECT MANAGER: William Yates

FALMOUTH SPUR BARRIER TOLL PLAZA ORT CONVERSION

CROSS SECTIONS STA. 133+00 TO STA. 133+50

SHEET NUMBER: XS-03

CONTRACT:2015.13

100% SUBMISSION
MAY 5, 2015

Date:5/14/2015

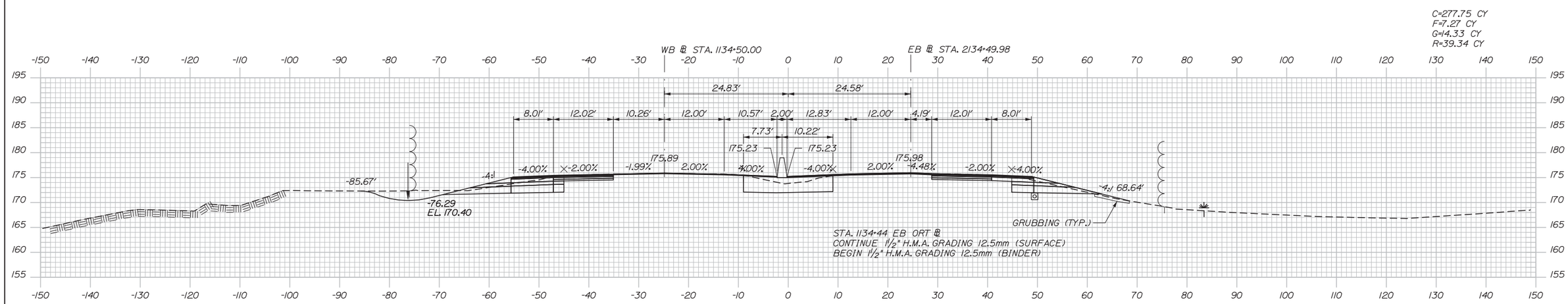

134+50.00

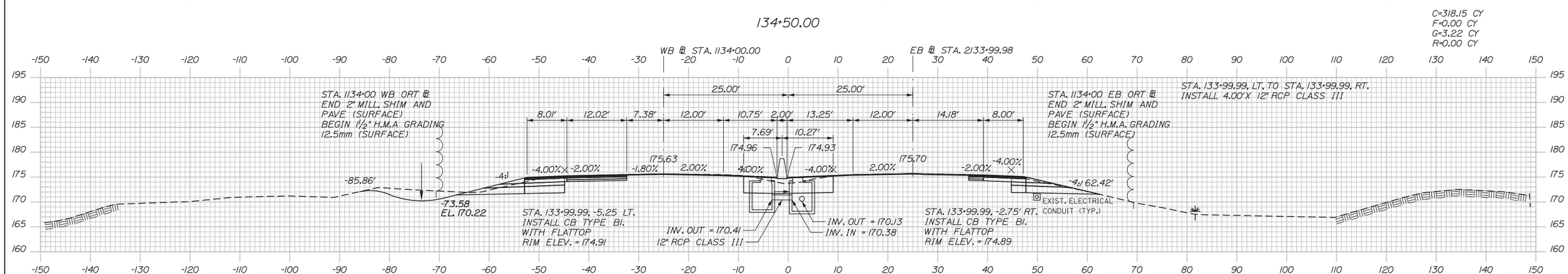

134+00.00

Scale:

No.	Revision	By	Date

Designed by:

HNTB

CONSULTANT PROJECT MANAGER: R. Bruce Munger, P.E.

	By	Date		By	Date
Designed	HME	05/15	Checked	RBM	05/15
Drawn	MPC	05/15	In Charge of	RAL	05/15

HNTB CORPORATION
340 County Road, Suite 6-C
Westbrook, ME 04092
TEL (207) 774-5155
FAX (207) 228-0909

MAINE TURNPIKE

THE GOLD STAR MEMORIAL HIGHWAY

MTA PROJECT MANAGER: William Yates

FALMOUTH SPUR BARRIER TOLL PLAZA
ORT CONVERSION

CROSS SECTIONS
STA. 134+00 TO STA. 134+50

SHEET NUMBER: XS-04

CONTRACT:2015.13

Filename: Xsect.dgn

100% SUBMISSION
MAY 5, 2015

Date:5/14/2015

STA. 2135+61 WB ORT ℄
CONTINUE 1½" H.M.A. GRADING 12.5mm (SURFACE)
BEGIN 1½" H.M.A. GRADING 12.5mm (BINDER)

C=291.93 CY
F=36.45 CY
G=48.94 CY
R=0.00 CY

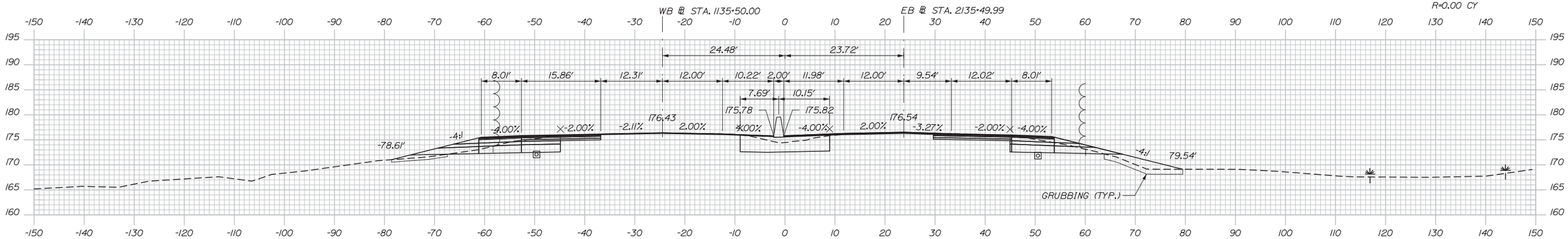

135+50.00

C=253.90 CY
F=20.19 CY
G=30.81 CY
R=39.34 CY

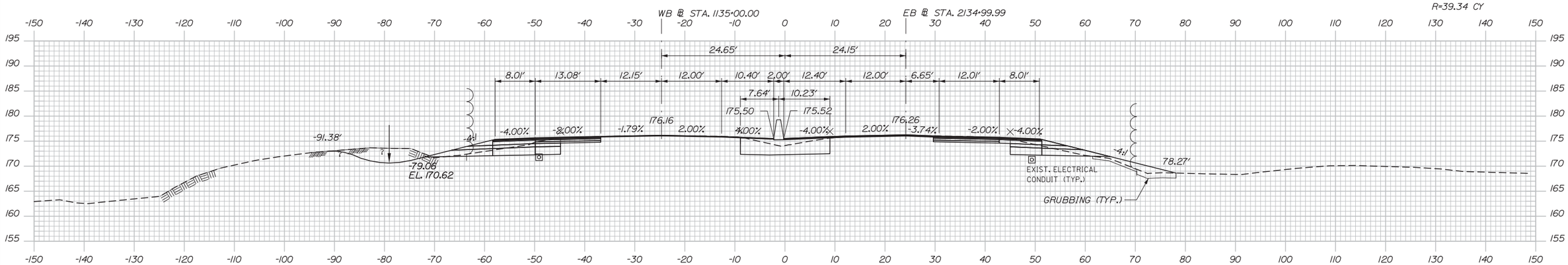

135+00.00

Scale:

No.	Revision	By	Date

Designed by:

HNTB

CONSULTANT PROJECT MANAGER: R. Bruce Munger, P.E.

	By	Date		By	Date
Designed	HME	05/15	Checked	RBM	05/15
Drawn	MPC	05/15	In Charge of	RAL	05/15

HNTB CORPORATION
340 County Road, Suite 6-C
Westbrook, ME 04092
TEL (207) 774-5155
FAX (207) 228-0909

MAINE TURNPIKE

THE GOLD STAR MEMORIAL HIGHWAY

MTA PROJECT MANAGER: William Yates

FALMOUTH SPUR BARRIER TOLL PLAZA
ORT CONVERSION

CROSS SECTIONS
STA. 135+00 TO STA. 135+50

SHEET NUMBER: XS-05

CONTRACT:2015.13

Filename: Xsect.dgn

100% SUBMISSION
MAY 5, 2015

Date:5/14/2015

C=444.84 CY
F=7.27 CY
G=15.44 CY
R=0.00 CY

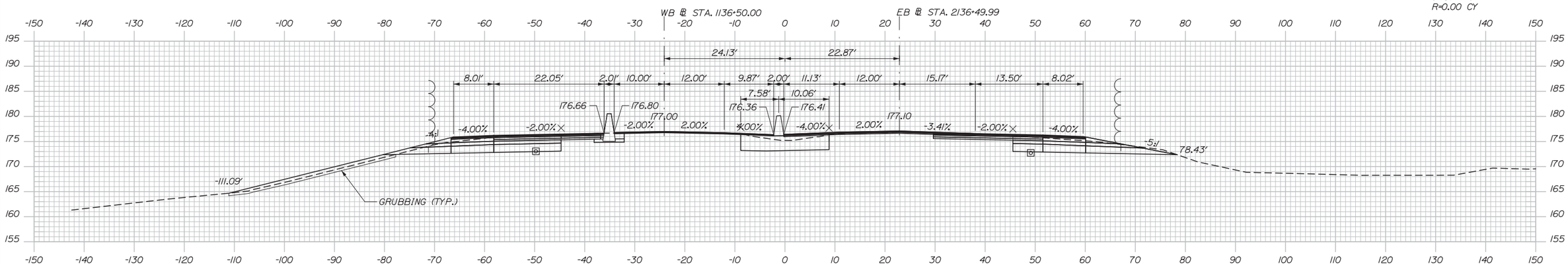

136+50.00

C=368.48 CY
F=30.79 CY
G=44.69 CY
R=0.00 CY

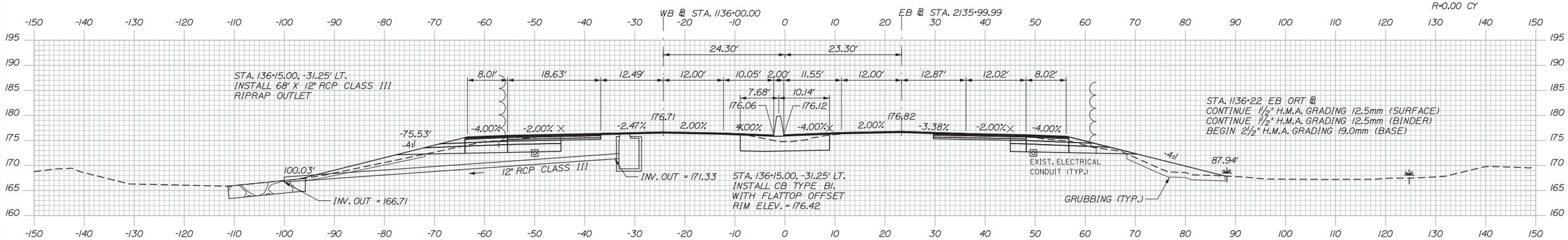

136+00.00

Filename: Xsect.dgn

Scale:

No.	Revision	By	Date

Designed by:

HNTB

CONSULTANT PROJECT MANAGER: R. Bruce Munger, P.E.

	By	Date		By	Date
Designed	HME	05/15	Checked	RBM	05/15
Drawn	MPC	05/15	In Charge of	RAL	05/15

HNTB CORPORATION
340 County Road, Suite 6-C
Westbrook, ME 04092
TEL (207) 774-5155
FAX (207) 228-0909

MAINE TURNPIKE

THE GOLD STAR MEMORIAL HIGHWAY

MTA PROJECT MANAGER: William Yates

FALMOUTH SPUR BARRIER TOLL PLAZA ORT CONVERSION

CROSS SECTIONS
STA. 136+00 TO STA. 136+50

SHEET NUMBER: XS-06

CONTRACT:2015.13

100% SUBMISSION
MAY 5, 2015

Date:5/14/2015

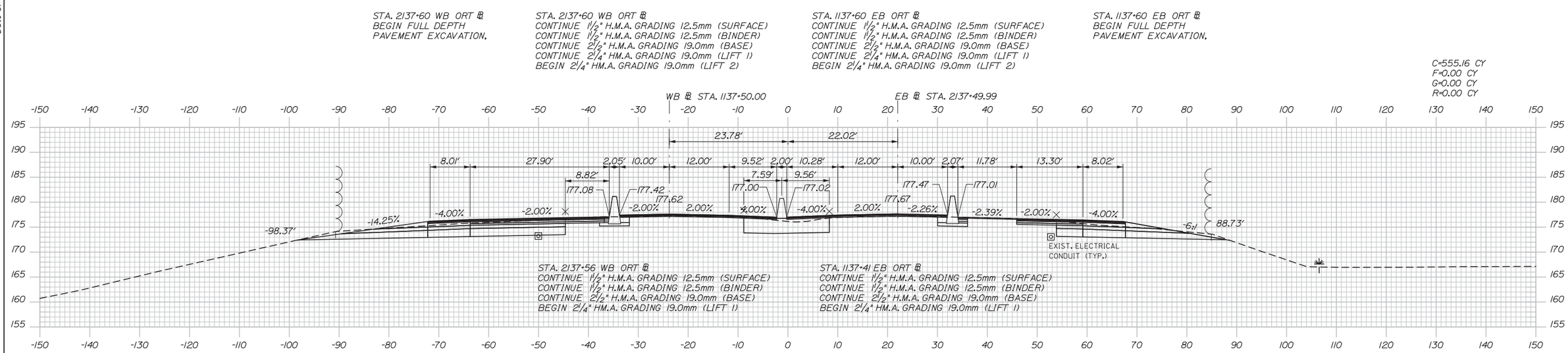

137+50.00

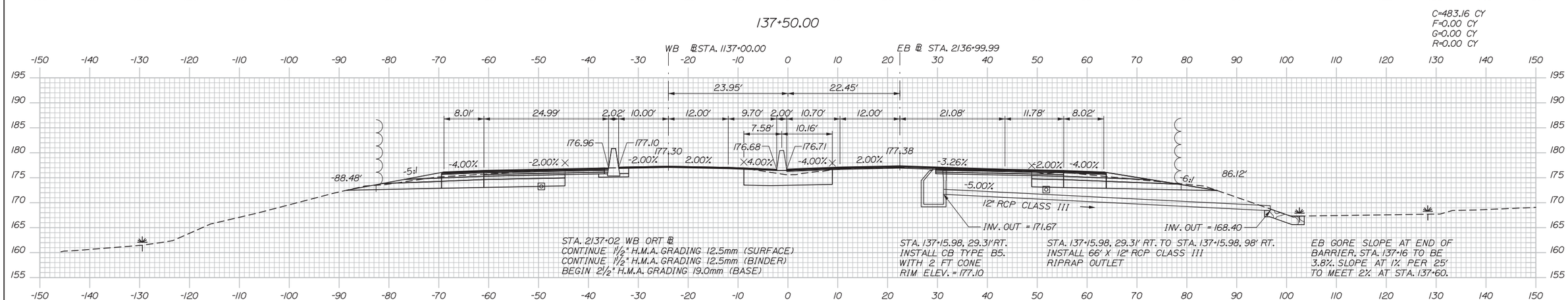

137+00.00

Filename: Xsect.dgn

Scale:

No.	Revision	By	Date

Designed by:

HNTB

CONSULTANT PROJECT MANAGER: R. Bruce Munger, P.E.

	By	Date		By	Date
Designed	HME	05/15	Checked	RBM	05/15
Drawn	MPC	05/15	In Charge of	RAL	05/15

HNTB CORPORATION
340 County Road, Suite 6-C
Westbrook, ME 04092
TEL (207) 774-5155
FAX (207) 228-0909

MAINE TURNPIKE

THE GOLD STAR MEMORIAL HIGHWAY

MTA PROJECT MANAGER: William Yates

FALMOUTH SPUR BARRIER TOLL PLAZA
ORT CONVERSION

CROSS SECTIONS
STA. 137+00 TO STA. 137+50

SHEET NUMBER: XS-07

CONTRACT:2015.13

100% SUBMISSION
MAY 5, 2015

Date:5/14/2015

STA. 138+37.03, LT. TO STA. 138+37.07, LT.
INSTALL 22'X 12" RCP CLASS III

STA. 138+37.07, LT. TO STA. 138+37.07, RT.
INSTALL 4.00'X 12" RCP CLASS III

STA. 138+37.07, RT. TO STA. 138+37.02, RT.
INSTALL 22'X 12" RCP CLASS III

STA. 138+37.02, 29.04' RT. TO STA. 138+37.02, 106.32' RT.
INSTALL 76' X 12" RCP CLASS III
RIPRAP OUTLET

STA. 138+37.03, -30.47' LT.
INSTALL CB TYPE B5.
WITH 2 FT CONE
RIM ELEV. = 177.89

STA. 138+37.07, -5.25'LT.
INSTALL CB TYPE BI.
WITH FLATTOP
RIM ELEV. = 177.53

STA. 138+37.07, 2.75'RT.
INSTALL CB TYPE B5.
WITH 2FT CONE
RIM ELEV. = 177.53

STA. 138+37.02, 28.29' RT.
INSTALL CB TYPE B5.
WITH 2 FT CONE
RIM ELEV. = 177.90

C=658.48 CY
F=0.00 CY
G=0.00 CY
R=0.00 CY

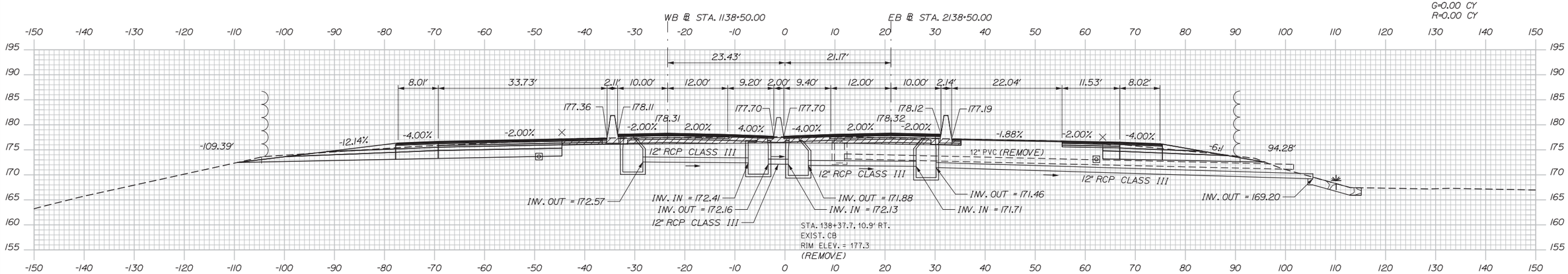

138+50.00

C=614.93 CY
F=0.00 CY
G=0.00 CY
R=0.00 CY

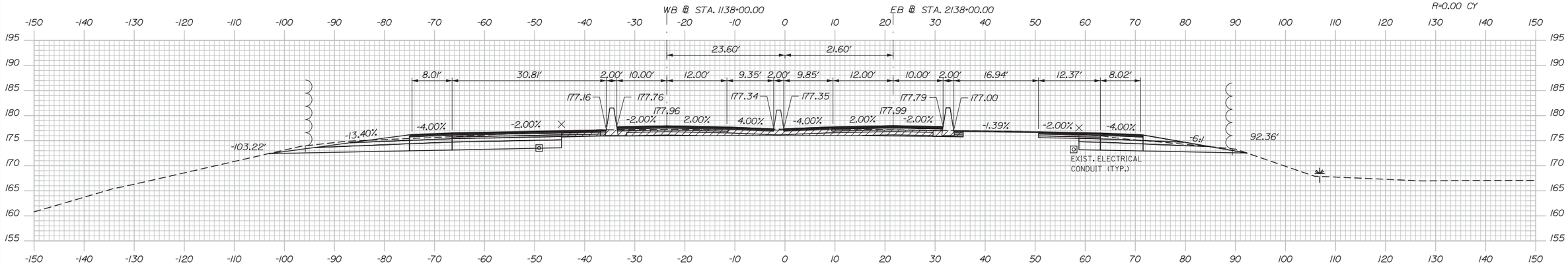

138+00.00

Scale:

No.	Revision	By	Date

Designed by:

HNTB

CONSULTANT PROJECT MANAGER: R. Bruce Munger, P.E.

	By	Date		By	Date
Designed	HME	05/15	Checked	RBM	05/15
Drawn	MPC	05/15	In Charge of	RAL	05/15

HNTB CORPORATION
340 County Road, Suite 6-C
Westbrook, ME 04092
TEL (207) 774-5155
FAX (207) 228-0909

MAINE TURNPIKE

THE GOLD STAR MEMORIAL HIGHWAY

MTA PROJECT MANAGER: William Yates

FALMOUTH SPUR BARRIER TOLL PLAZA ORT CONVERSION

CROSS SECTIONS
STA. 138+00 TO STA. 138+50

SHEET NUMBER: XS-08

CONTRACT:2015.13

Filename: Xsect.dgn

100% SUBMISSION
MAY 5, 2015

Date:5/14/2015

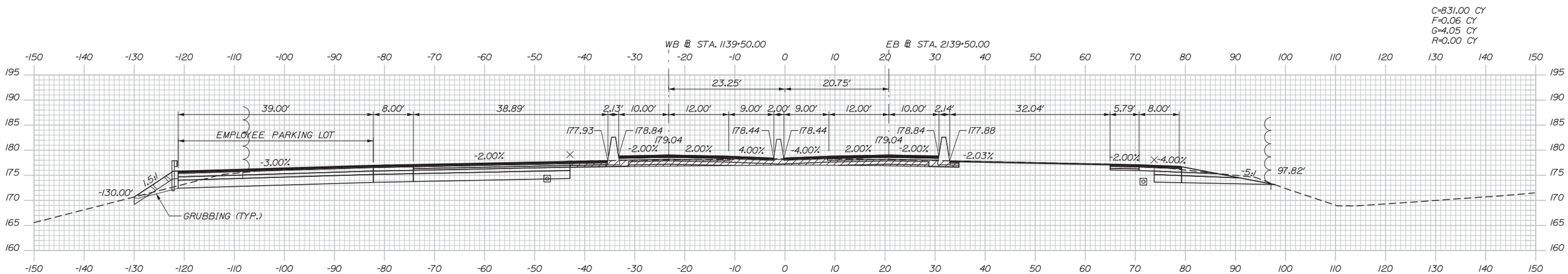

139+50.00

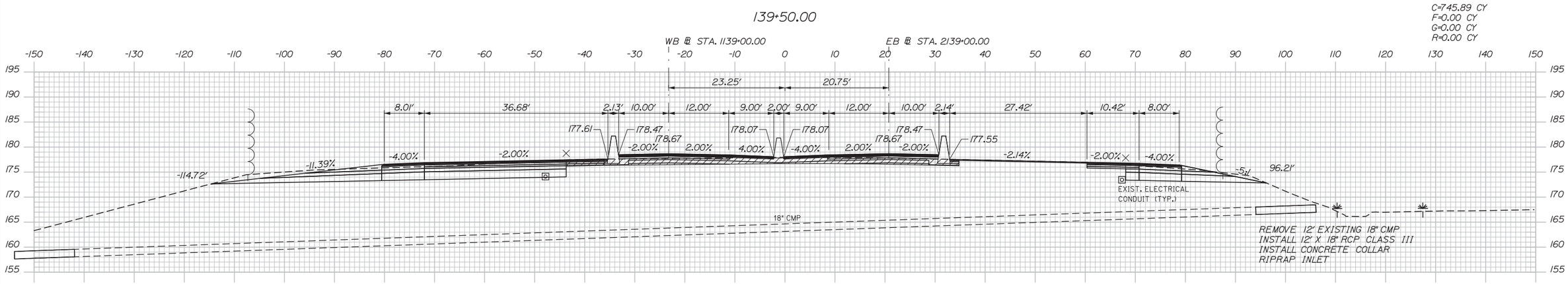

139+00.00

Scale:

No.	Revision	By	Date

Designed by:

HNTB

CONSULTANT PROJECT MANAGER: R. Bruce Munger, P.E.

	By	Date		By	Date
Designed	HME	05/15	Checked	RBM	05/15
Drawn	MPC	05/15	In Charge of	RAL	05/15

HNTB CORPORATION
340 County Road, Suite 6-C
Westbrook, ME 04092
TEL (207) 774-5155
FAX (207) 228-0909

MAINE TURNPIKE

THE GOLD STAR MEMORIAL HIGHWAY

MTA PROJECT MANAGER: William Yates

FALMOUTH SPUR BARRIER TOLL PLAZA
ORT CONVERSION

CROSS SECTIONS
STA. 139+00 TO STA. 139+50

SHEET NUMBER: XS-09

CONTRACT:2015.13

Filename: Xsect.dgn

100% SUBMISSION
MAY 5, 2015

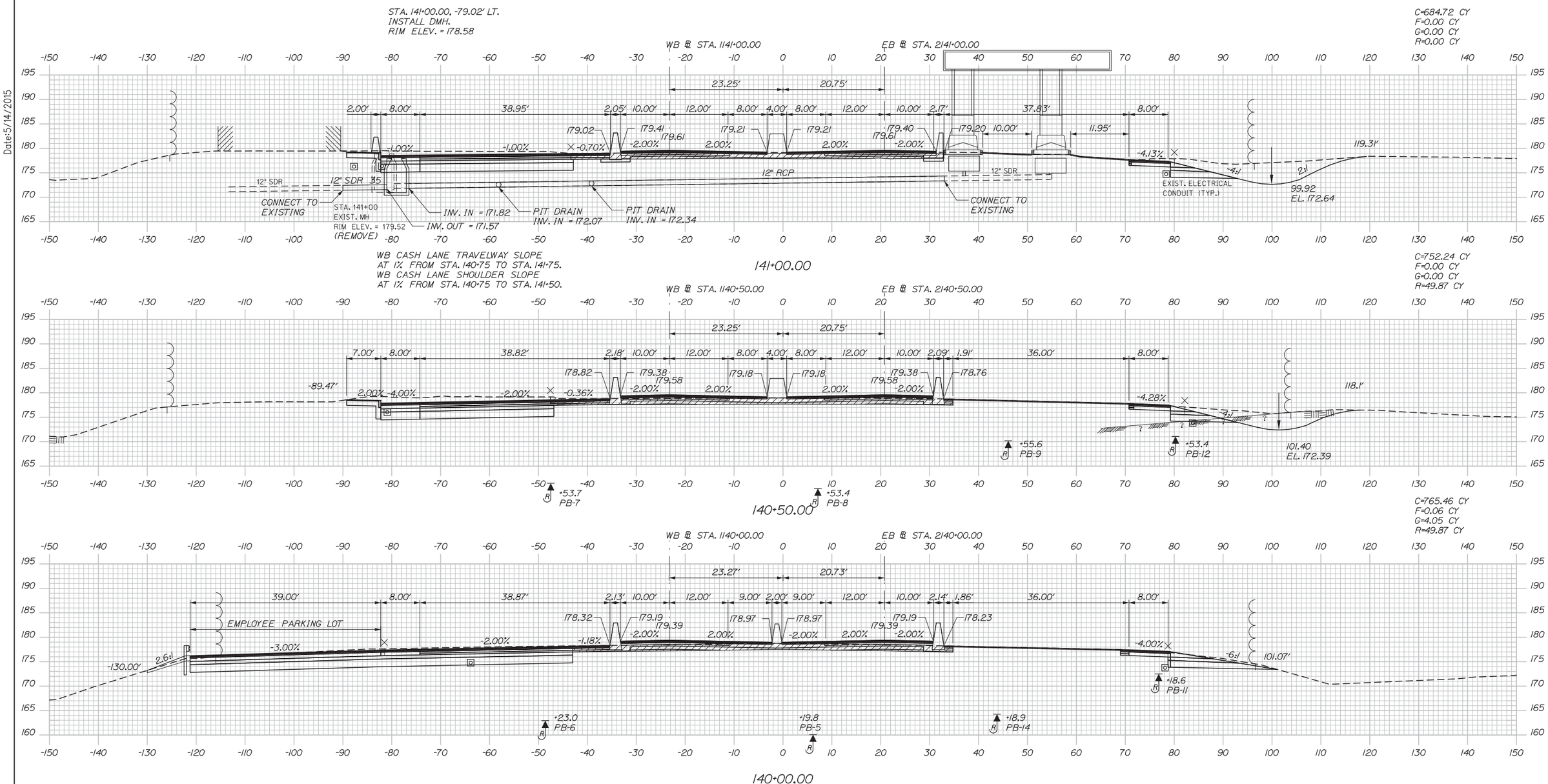

Date:5/14/2015

Scale:

No.	Revision	By	Date

Designed by:

HNTB

CONSULTANT PROJECT MANAGER: R. Bruce Munger, P.E.

	By	Date		By	Date
Designed	HME	05/15	Checked	RBM	05/15
Drawn	MPC	05/15	In Charge of	RAL	05/15

HNTB CORPORATION
340 County Road, Suite 6-C
Westbrook, ME 04092
TEL (207) 774-5155
FAX (207) 228-0909

MAINE TURNPIKE

THE GOLD STAR MEMORIAL HIGHWAY

MTA PROJECT MANAGER: William Yates

FALMOUTH SPUR BARRIER TOLL PLAZA ORT CONVERSION

CROSS SECTIONS STA. 140+00 TO STA. 141+00

SHEET NUMBER: XS-10

CONTRACT:2015.13

Filename: Xsect.dgn

100% SUBMISSION
MAY 5, 2015

C=755.35 CY
F=0.17 CY
G=0.00 CY
R=50.93 CY

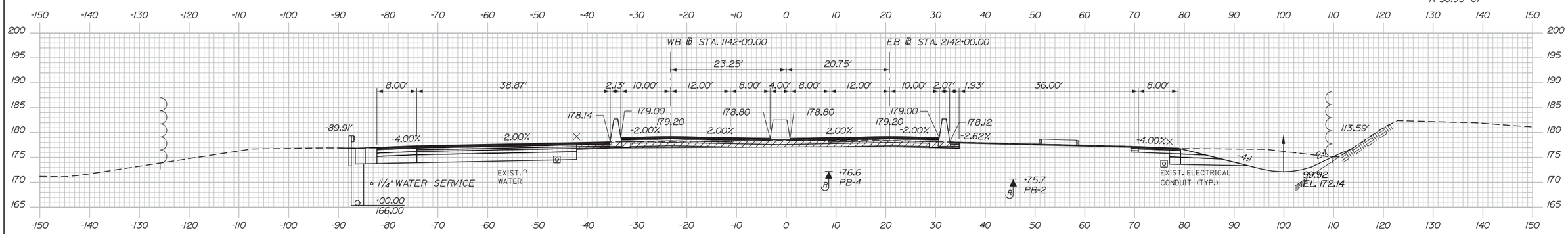

STA. 141+58.63, 88.27' LT. TO STA. 144+03, 75.76' LT.
INSTALL 245' X 12" UD TYPE "C"

142+00.00

C=505.14 CY * EXCLUDES
F=0.15 CY TUNNEL
G=0.00 CY WORK
R=0.00 CY

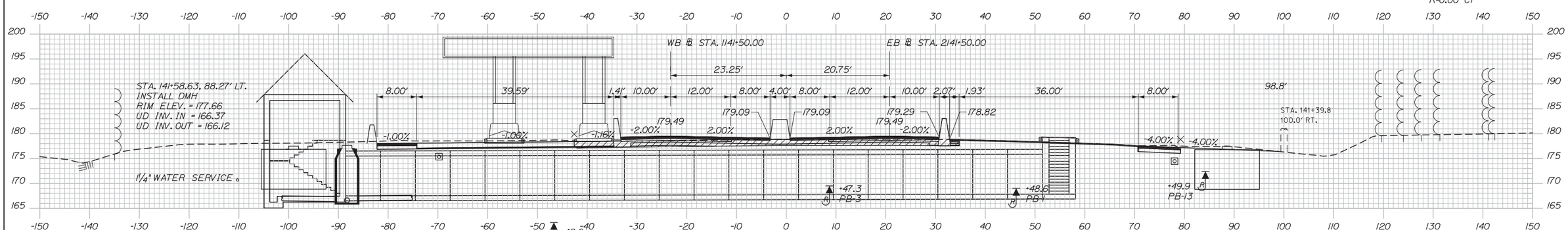

141+50.00

Scale:

No.	Revision	By	Date

Designed by:

HNTB

CONSULTANT PROJECT MANAGER: R. Bruce Munger, P.E.

	By	Date		By	Date
Designed	HME	05/15	Checked	RBM	05/15
Drawn	MPC	05/15	In Charge of	RAL	05/15

HNTB CORPORATION
340 County Road, Suite 6-C
Westbrook, ME 04092
TEL (207) 774-5155
FAX (207) 228-0909

MAINE TURNPIKE

THE GOLD STAR MEMORIAL HIGHWAY

MTA PROJECT MANAGER: William Yates

FALMOUTH SPUR BARRIER TOLL PLAZA ORT CONVERSION

CROSS SECTIONS
STA. 141+50 TO STA. 142+00

SHEET NUMBER: XS-11

CONTRACT: 2015.13

81 OF 153

Date: 5/14/2015

Filename: Xsect.dgn

100% SUBMISSION
MAY 5, 2015

Date:5/14/2015

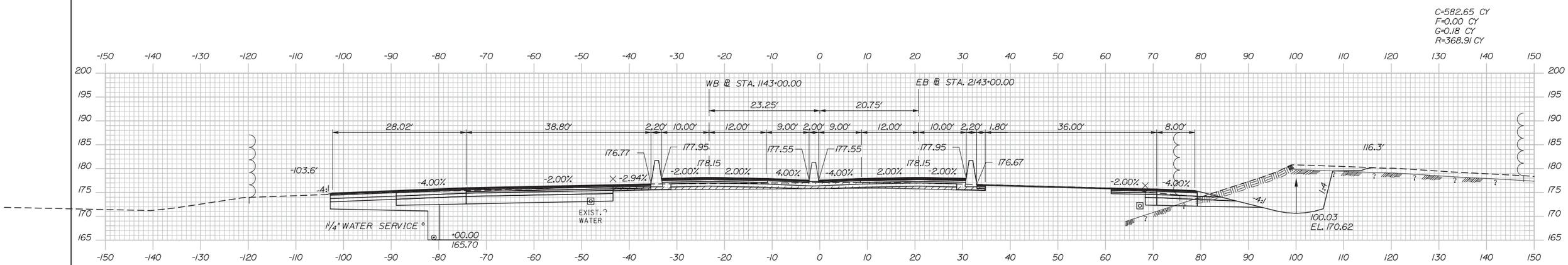

143+00.00

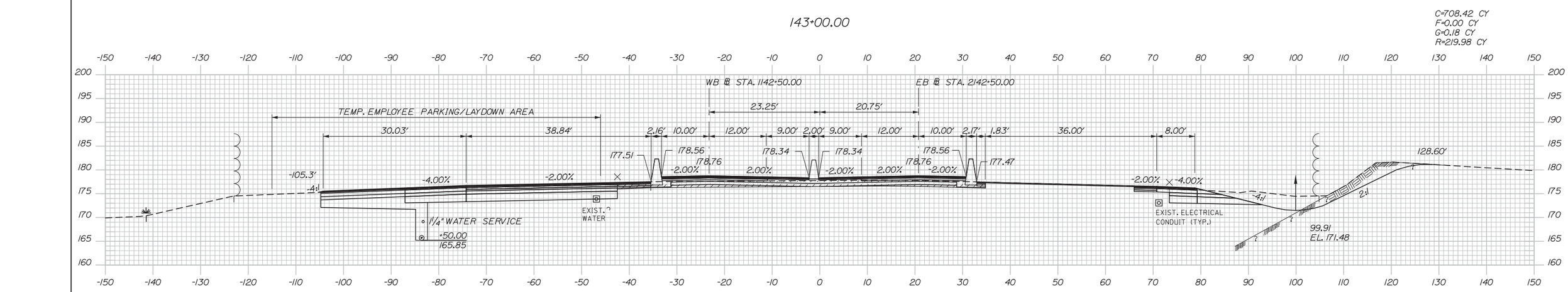

142+50.00

Scale:

No.	Revision	By	Date

Designed by:

HNTB

CONSULTANT PROJECT MANAGER: R. Bruce Munger, P.E.

	By	Date		By	Date
Designed	HME	05/15	Checked	RBM	05/15
Drawn	MPC	05/15	In Charge of	RAL	05/15

HNTB CORPORATION
340 County Road, Suite 6-C
Westbrook, ME 04092
TEL (207) 774-5155
FAX (207) 228-0909

MAINE TURNPIKE

THE GOLD STAR MEMORIAL HIGHWAY

MTA PROJECT MANAGER: William Yates

FALMOUTH SPUR BARRIER TOLL PLAZA ORT CONVERSION

CROSS SECTIONS STA. 142+50 TO STA. 143+00

SHEET NUMBER: XS-12

CONTRACT:2015.13

Filename: Xsect.dgn

100% SUBMISSION
MAY 5, 2015

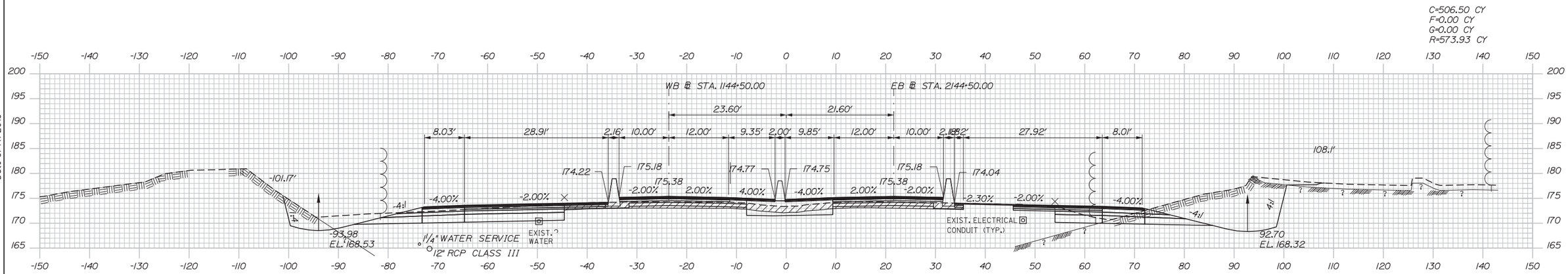

Date:5/14/2015

Filename: Xsect.dgn

Scale:

No.	Revision	By	Date

Designed by:

HNTB

CONSULTANT PROJECT MANAGER: R. Bruce Munger, P.E.

	By	Date		By	Date
Designed	HME	05/15	Checked	RBM	05/15
Drawn	MPC	05/15	In Charge of	RAL	05/15

HNTB CORPORATION
340 County Road, Suite 6-C
Westbrook, ME 04092
TEL (207) 774-5155
FAX (207) 228-0909

MAINE TURNPIKE

THE GOLD STAR MEMORIAL HIGHWAY

MTA PROJECT MANAGER: William Yates

FALMOUTH SPUR BARRIER TOLL PLAZA
ORT CONVERSION

CROSS SECTIONS
STA. 143+50 TO STA. 144+50

SHEET NUMBER: XS-13

CONTRACT:2015.13

100% SUBMISSION
MAY 5, 2015

Date:5/14/2015

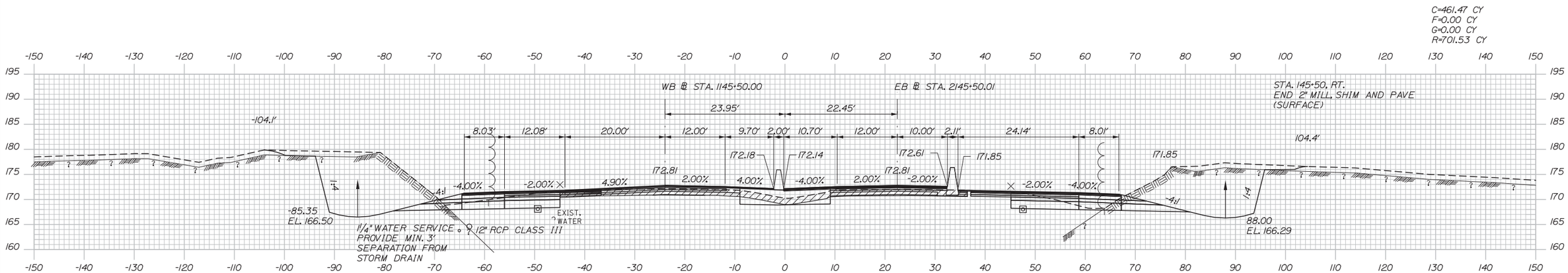

145+50.00

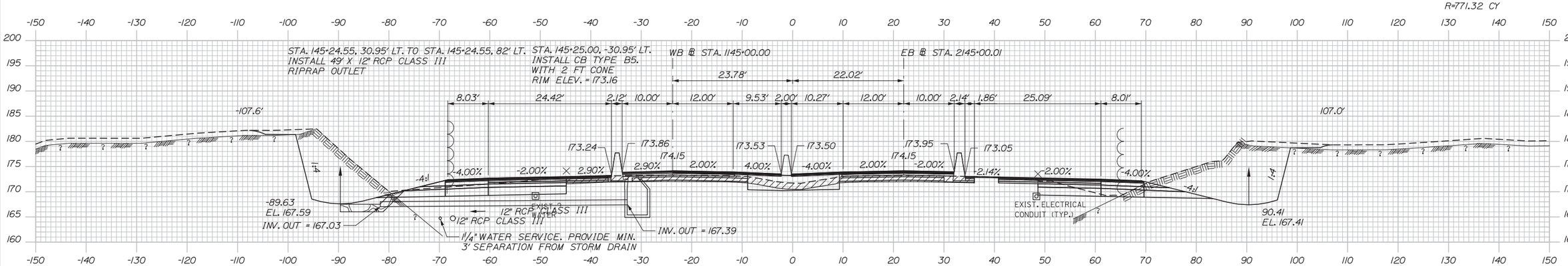

145+00.00

Scale:

No.	Revision	By	Date

Designed by:

HNTB

CONSULTANT PROJECT MANAGER: R. Bruce Munger, P.E.

	By	Date		By	Date
Designed	HME	05/15	Checked	RBM	05/15
Drawn	MPC	05/15	In Charge of	RAL	05/15

HNTB CORPORATION
340 County Road, Suite 6-C
Westbrook, ME 04092
TEL (207) 774-5155
FAX (207) 228-0909

MAINE TURNPIKE

THE GOLD STAR MEMORIAL HIGHWAY

MTA PROJECT MANAGER: William Yates

FALMOUTH SPUR BARRIER TOLL PLAZA ORT CONVERSION

CROSS SECTIONS STA. 145+00 TO STA. 145+50

SHEET NUMBER: XS-14

CONTRACT:2015.13

Filename: Xsect.dgn

100% SUBMISSION
MAY 5, 2015

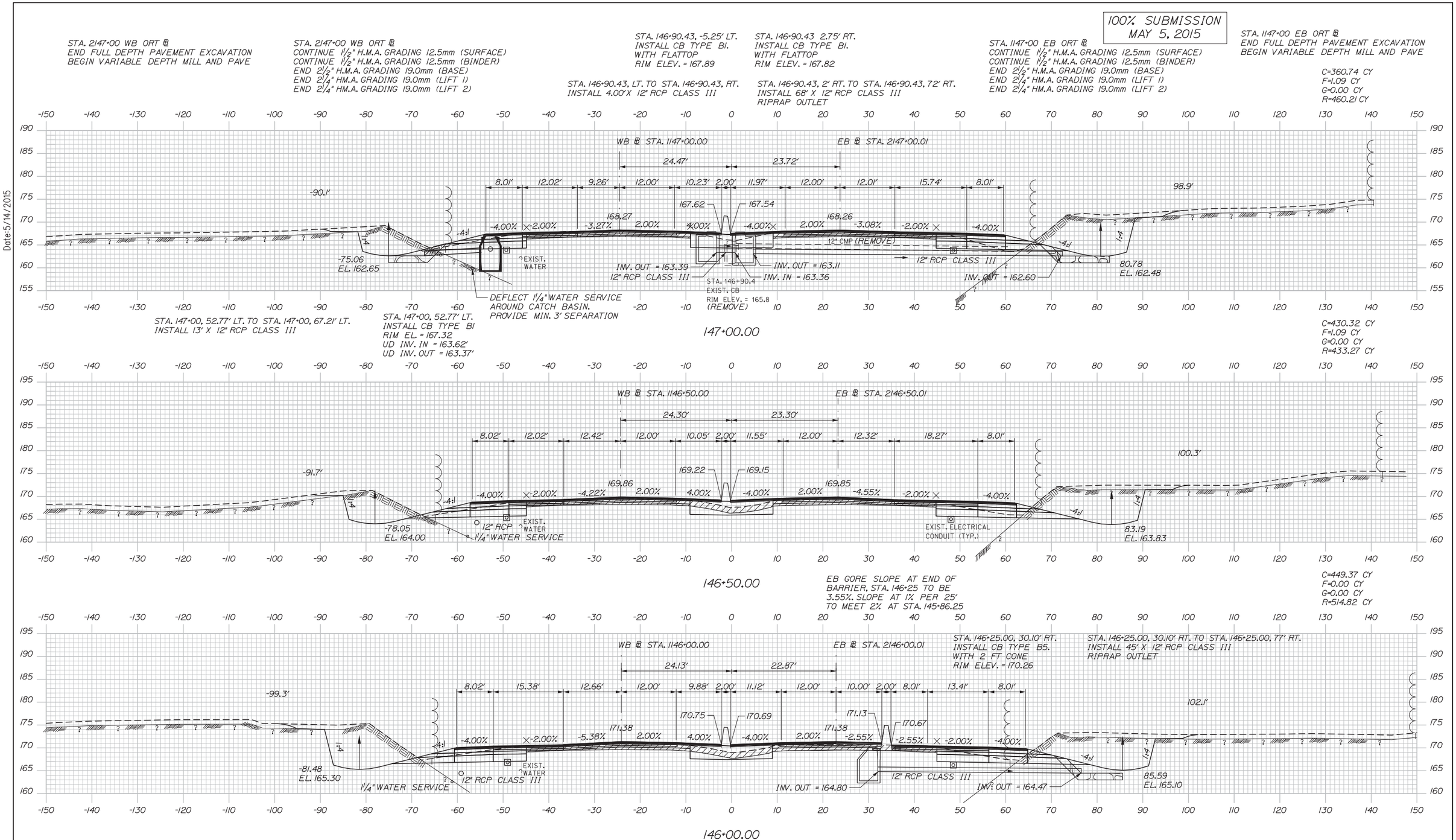

Date:5/14/2015

Filename: Xsect.dgn

Scale:

No.	Revision	By	Date

Designed by:

HNTB

CONSULTANT PROJECT MANAGER: R. Bruce Munger, P.E.

	By	Date		By	Date
Designed	HME	05/15	Checked	RBM	05/15
Drawn	MPC	05/15	In Charge of	RAL	05/15

HNTB CORPORATION
340 County Road, Suite 6-C
Westbrook, ME 04092
TEL (207) 774-5155
FAX (207) 228-0909

MAINE TURNPIKE

THE GOLD STAR MEMORIAL HIGHWAY

MTA PROJECT MANAGER: William Yates

FALMOUTH SPUR BARRIER TOLL PLAZA
ORT CONVERSION

CROSS SECTIONS
STA. 146+00 TO STA. 147+00

SHEET NUMBER: XS-15

CONTRACT:2015.13

100% SUBMISSION
MAY 5, 2015

Date:5/14/2015

C=288.45 CY
F=0.11 CY
G=1.58 CY
R=401.58 CY

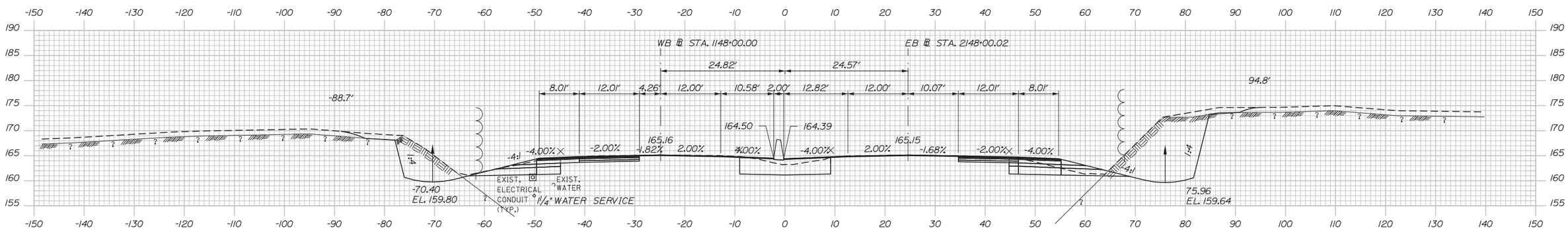

STA. 2148+50 WB ORT ℄
END 1 1/2" H.M.A. GRADING 12.5mm (SURFACE)
BEGIN END 2" MILL, SHIM AND PAVE (SURFACE)

148+00.00

STA. 1148+50 EB ORT ℄
END 1 1/2" H.M.A. GRADING 12.5mm (SURFACE)
BEGIN END 2" MILL, SHIM AND PAVE (SURFACE)

C=292.69 CY
F=0.00 CY
G=0.00 CY
R=484.27 CY

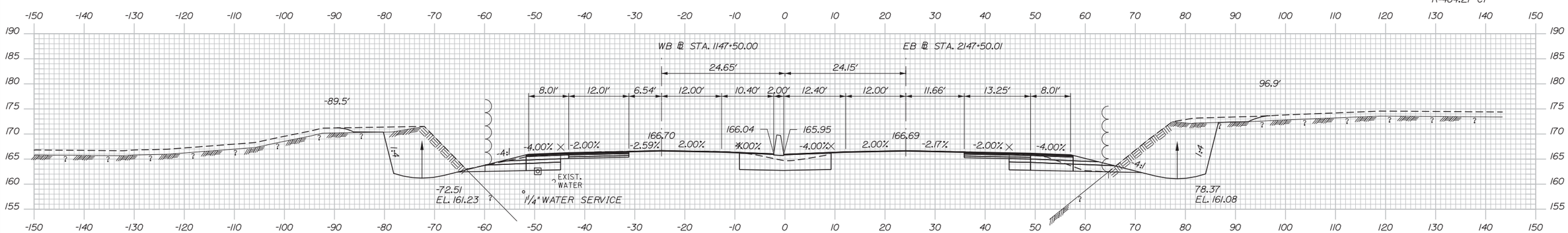

STA. 2147+24 WB ORT ℄
CONTINUE 1 1/2" H.M.A. GRADING 12.5mm (SURFACE)
END 1 1/2" H.M.A. GRADING 12.5mm (BINDER)

147+50.00

STA. 1147+29 EB ORT ℄
CONTINUE 1 1/2" H.M.A. GRADING 12.5mm (SURFACE)
END 1 1/2" H.M.A. GRADING 12.5mm (BINDER)

Scale:

No.	Revision	By	Date

Designed by:

HNTB

CONSULTANT PROJECT MANAGER: R. Bruce Munger, P.E.

	By	Date		By	Date
Designed	HME	05/15	Checked	RBM	05/15
Drawn	MPC	05/15	In Charge of	RAL	05/15

HNTB CORPORATION
340 County Road, Suite 6-C
Westbrook, ME 04092
TEL (207) 774-5155
FAX (207) 228-0909

MAINE TURNPIKE

THE GOLD STAR MEMORIAL HIGHWAY

MTA PROJECT MANAGER: William Yates

FALMOUTH SPUR BARRIER TOLL PLAZA ORT CONVERSION

CROSS SECTIONS
STA. 147+50 TO STA. 148+00

SHEET NUMBER: XS-16

CONTRACT:2015.13

Filename: Xsect.dgn

100% SUBMISSION
MAY 5, 2015

Date:5/14/2015

C=204.51 CY
F=3.69 CY
G=5.68 CY
R=224.56 CY

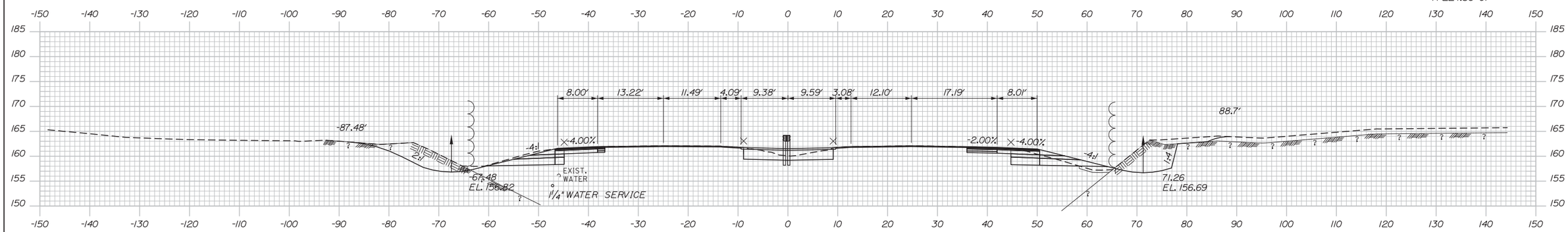

149+00.00

C=252.60 CY
F=3.01 CY
G=4.52 CY
R=276.69 CY

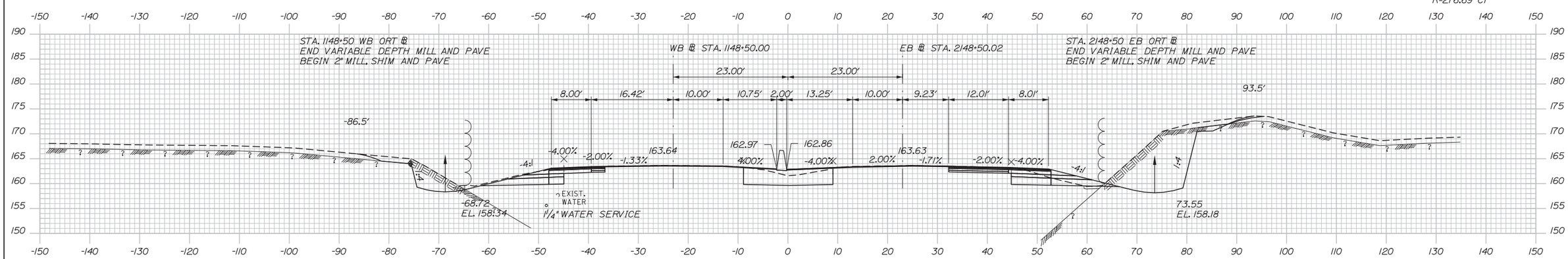

148+50.00

Scale:

No.	Revision	By	Date

Designed by:

HNTB

CONSULTANT PROJECT MANAGER: R. Bruce Munger, P.E.

	By	Date		By	Date
Designed	HME	05/15	Checked	RBM	05/15
Drawn	MPC	05/15	In Charge of	RAL	05/15

HNTB CORPORATION
340 County Road, Suite 6-C
Westbrook, ME 04092
TEL (207) 774-5155
FAX (207) 228-0909

MAINE TURNPIKE

THE GOLD STAR MEMORIAL HIGHWAY

MTA PROJECT MANAGER: William Yates

FALMOUTH SPUR BARRIER TOLL PLAZA
ORT CONVERSION

CROSS SECTIONS
STA. 148+50 TO STA. 149+00

SHEET NUMBER: XS-17

CONTRACT:2015.13

Filename: Xsect.dgn

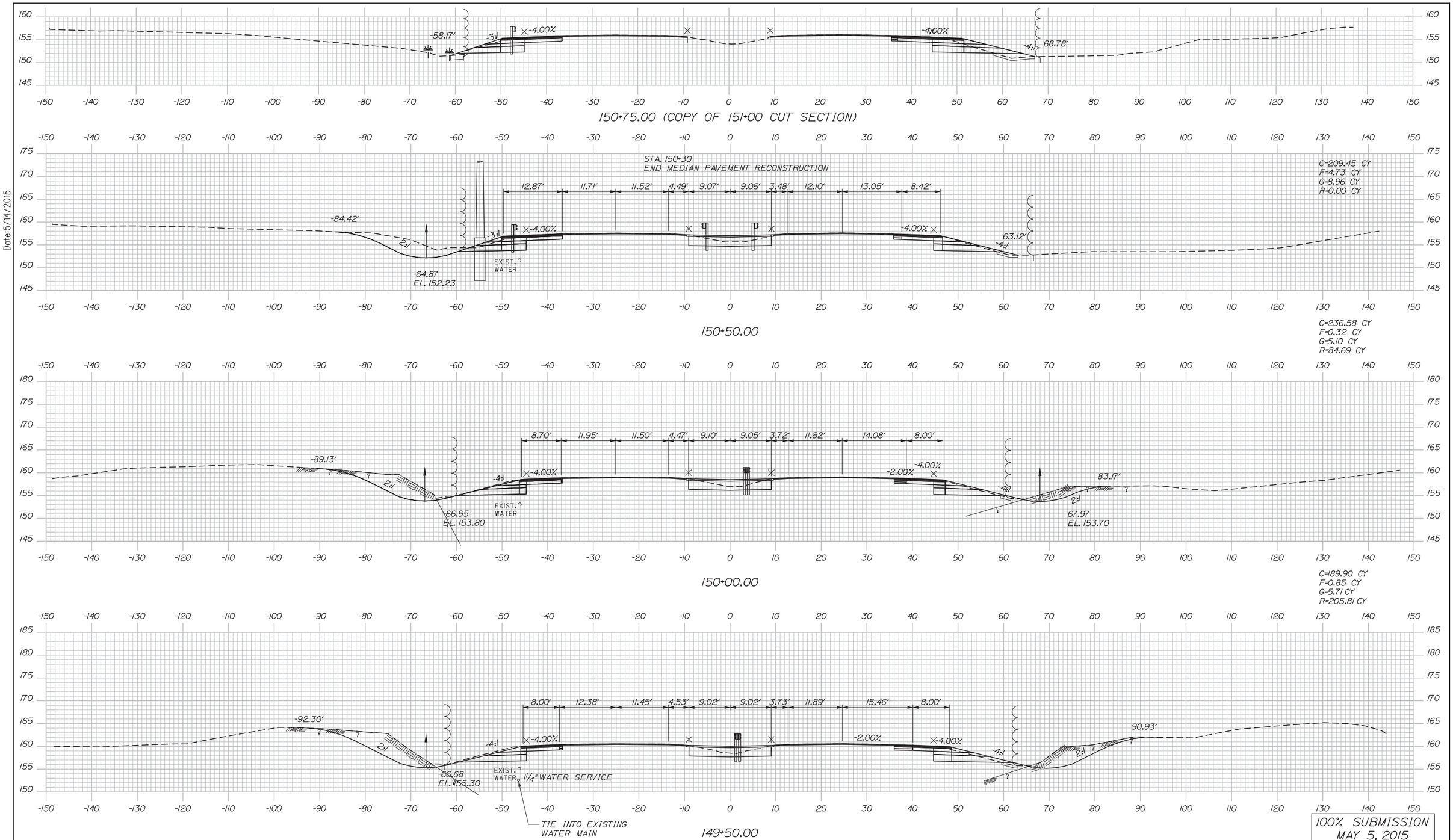

Date:5/14/2015

Filename: Xsect.dgn

Scale:			
No.	Revision	By	Date

Designed by:

HNTB

CONSULTANT PROJECT MANAGER: R. Bruce Munger, P.E.

	By	Date		By	Date
Designed	HME	05/15	Checked	RBM	05/15
Drawn	MPC	05/15	In Charge of	RAL	05/15

HNTB CORPORATION
340 County Road, Suite 6-C
Westbrook, ME 04092
TEL (207) 774-5155
FAX (207) 228-0909

MAINE TURNPIKE

THE GOLD STAR MEMORIAL HIGHWAY

MTA PROJECT MANAGER: William Yates

FALMOUTH SPUR BARRIER TOLL PLAZA
ORT CONVERSION

CROSS SECTIONS
STA. 149+50 TO STA. 150+50

SHEET NUMBER: XS-18

CONTRACT:2015.13

100% SUBMISSION
MAY 5, 2015

STA. 1152+00 WESTBOUND ℄
END 2" MILL, SHIM AND PAVE (ORT AND CASH LANE)
END FULL DEPTH RECONSTRUCTION (CASH LANE OUTSIDE SHOULDER)
BEGIN SHOULDER WIDENING WITH GRINDINGS

STA. 2152+00 EASTBOUND ℄
END 2" MILL, SHIM AND PAVE (ORT AND CASH LANE)
END FULL DEPTH RECONSTRUCTION (CASH LANE OUTSIDE SHOULDER)

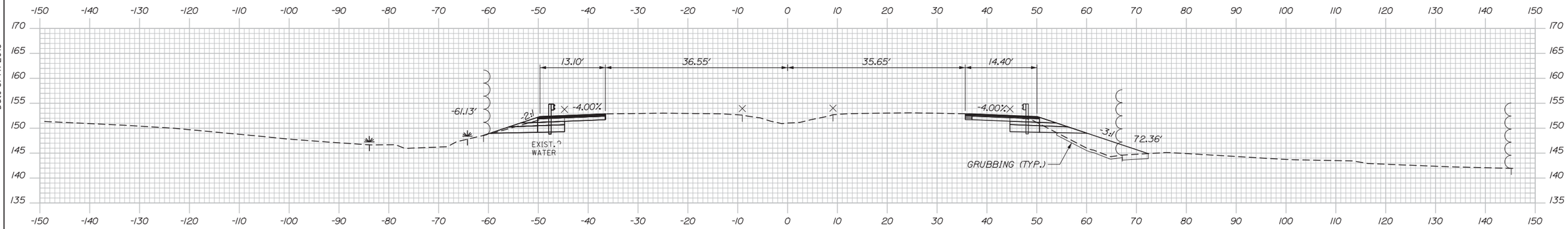

152+00.00

C=128.65 CY
F=38.57 CY
G=18.76 CY
R=0.00 CY

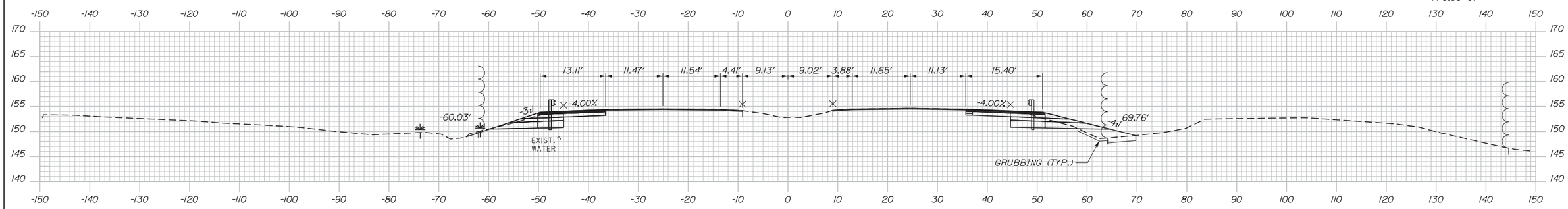

151+50.00

C=134.80 CY
F=14.47 CY
G=14.67 CY
R=0.00 CY

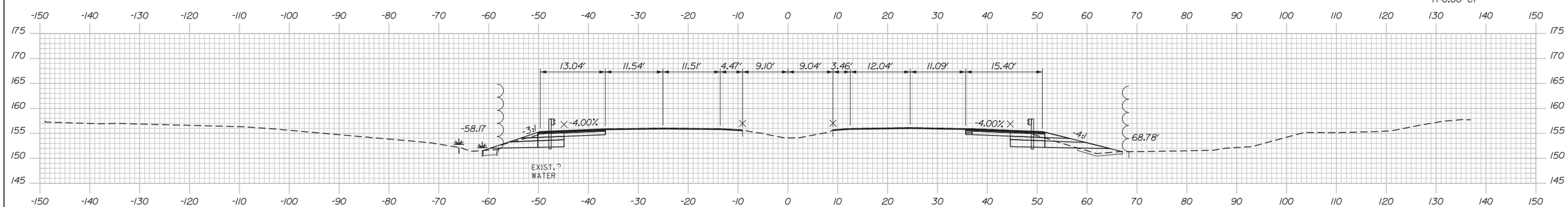

151+00.00

Date:5/14/2015

Filename: Xsect.dgn

Scale:			
No.	Revision	By	Date

Designed by:

HNTB

CONSULTANT PROJECT MANAGER: R. Bruce Munger, P.E.

	By	Date		By	Date
Designed	HME	05/15	Checked	RBM	05/15
Drawn	MPC	05/15	In Charge of	RAL	05/15

HNTB CORPORATION
340 County Road, Suite 6-C
Westbrook, ME 04092
TEL (207) 774-5155
FAX (207) 228-0909

MAINE TURNPIKE

THE GOLD STAR MEMORIAL HIGHWAY

MTA PROJECT MANAGER: William Yates

FALMOUTH SPUR BARRIER TOLL PLAZA
ORT CONVERSION

CROSS SECTIONS
STA. 151+00 TO STA. 152+00

SHEET NUMBER: XS-19

CONTRACT:2015.13

TOLL PLAZA STRUCTURAL GENERAL NOTES:

SPECIFICATIONS

DESIGN

STRUCTURAL SLAB
- AASHTO LRFD BRIDGE DESIGN SPECIFICATIONS, 7TH EDITION WITH 2015 INTERIMS
- AASHTO STANDARD SPECIFICATIONS FOR HIGHWAY BRIDGES (17th EDITION)
- AASHTO STANDARD SPECIFICATIONS FOR STRUCTURAL SUPPORTS FOR HIGHWAY SIGNS, LUMINAIRES, AND TRAFFIC SIGNALS (6th EDITION 2013 WITH 2015 INTERIMS)
- AASHTO BRIDGE DESIGN GUIDE SPECIFICATIONS FOR GFRP-REINFORCED CONCRETE BRIDGE DECKS AND TRAFFIC RAILINGS (NOVEMBER 2009)

EXISTING CANOPY MODIFICATIONS
- AISC MANUAL OF STEEL CONSTRUCTION, LRFD METHOD, 13th EDITION
- ASCE 7-10 MINIMUM DESIGN LOADS FOR BUILDINGS AND OTHER STRUCTURES, 3rd PRINTING (2013)

CONSTRUCTION

STATE OF MAINE, DEPARTMENT OF TRANSPORTATION STANDARD SPECIFICATIONS, HIGHWAYS AND BRIDGES, REVISION OF 2002

STATE OF MAINE, DEPARTMENT OF TRANSPORTATION STANDARD DETAILS FOR HIGHWAYS AND BRIDGES, DECEMBER 2002 WITH UPDATES

DESIGN LOADING

LIVE LOAD

TUNNEL AND STRUCTURAL SLAB - HL-93

EXISTING CANOPY MODIFICATIONS - 20 PSF

WIND

BASIC WIND SPEED (V) = 95 MPH

SNOW / ICE

EXISTING CANOPY MODIFICATIONS - GROUND SNOW LOAD, p_g = 70 PSF (ASCE 7)
PROPOSED SPACE FRAME DESIGN - ICE LOAD 3 PSF

MATERIALS

CONCRETE

ALL STRUCTURAL CONCRETE - CLASS AAA

REINFORCING STEEL

ASTM A775 GRADE 60 (EPOXY-COATED BARS)

ASTM A884 CLASS A (EPOXY-COATED WELDED WIRE FABRIC)

ANCHOR RODS

SHALL MEET THE REQUIREMENTS OF ASTM F1554 GRADE 105 FOR SPACE FRAME AND ASTM F1554 GRADE 55 FOR CANOPY. ANCHOR RODS SHALL BE SWEDGED OR THREADED ON THE EMBEDDED PORTION OF THE ROD

GFRP REINFORCING

ASLAN 100 GFRP GLASS FIBER REINFORCED POLYMER (GFRP) REINFORCING BARS AS MANUFACTURED BY HUGHES BROTHERS, INC. OR APPROVED EQUAL

STRUCTURAL STEEL

STRUCTURAL STEEL TUBING SHALL CONFORM TO ASTM A500, GRADE B (f_y = 46,000 PSI)

ALL OTHER STRUCTURAL STEEL SHALL CONFORM TO ASTM A709, GRADES 36 AND 50 AS SPECIFIED.

BASIC DESIGN STRESSES

CONCRETE

CLASS AAA - f'_c = 4,500 PSI

REINFORCING STEEL

f_y = 60,000 PSI (BARS)

STRUCTURAL STEEL

ASTM A500 - f_y = 46,000 PSI

ASTM A709 GRADE 36 - f_y = 36,000 PSI

ASTM A709 GRADE 50 - f_y = 50,000 PSI

GFRP

#6 BAR - MINIMUM TENSILE STRESS = 90,000 PSI

ANCHOR RODS

SPACE FRAME: ASTM F1554 GRADE 105 - f_y = 105,000 PSI

CANOPY: ASTM F1554 GRADE 55 - f_y = 55,000 PSI

CONSTRUCTION NOTES:

1. DIMENSIONS, ANGLES, BEARINGS AND ELEVATIONS SHOWN ON THE PLANS HAVE BEEN OBTAINED FROM AVAILABLE PLANS OF THE EXISTING STRUCTURE, LIMITED FIELD INVESTIGATION, AND SURVEY AND MAY NOT ACCURATELY REFLECT ACTUAL FIELD CONDITIONS. ACCORDINGLY, THE CONTRACTOR SHALL BE RESPONSIBLE FOR MAKING FIELD MEASUREMENTS OF ALL EXISTING STRUCTURE COMPONENTS IMPACTED BY THE NEW WORK TO ASSURE CONSISTENCY WITH THE PROPOSED MODIFICATIONS. THE CONTRACTOR SHALL NOTIFY THE RESIDENT OF ANY EXISTING CONDITIONS THAT DO NOT MATCH THE AS-BUILT DRAWINGS OR THESE PLANS PRIOR TO ADVANCING THE WORK. SHOP DRAWINGS REQUIRED FOR VARIOUS ITEMS OF WORK SHALL INDICATE THE ACTUAL FIELD MEASUREMENTS AND SHALL BE SO NOTED.
2. THE CONTRACTOR SHALL TAKE SPECIAL CARE AND PRECAUTION TO ENSURE THAT NO DEBRIS FALLS, SPILLS OR ROLLS ONTO THE OPEN ROADWAY DURING CONSTRUCTION.
3. ALL CONSTRUCTION SIGNING AND TRAFFIC CONTROL MEASURES SHALL BE IN PLACE BEFORE CONSTRUCTION WORK BEGINS.
4. WHERE DRILLING AND ANCHORING OF REINFORCING STEEL IS SPECIFIED THE CONTRACTOR SHALL USE A MATERIAL LISTED ON THE MAINEDOT PRE QUALIFIED LIST OF CHEMICAL ANCHORING MATERIALS. THE DEPTH OF EMBEDMENT SHALL BE SUFFICIENT TO DEVELOP 125% OF THE YIELD STRENGTH OF THE BAR, BUT SHALL BE NO LESS THAN THE MINIMUM DEPTH OF EMBEDMENT WHEN SPECIFIED. WHERE MINIMUM EMBEDMENT DEPTHS HAVE NOT BEEN SPECIFIED BAR LENGTHS HAVE BEEN DEVELOPED BASED ON AN ASSUMED EMBEDMENT DEPTH 12" FOR ALL BAR SIZES. THE CONTRACTOR SHALL VERIFY THE REQUIRED DEPTH OF EMBEDMENT AND ADJUST THE REQUIRED BAR LENGTHS AS NEEDED.
5. PREMOLDED JOINT FILLER SHALL CONFORM TO ASTM DESIGNATION D1752, TYPE 1 OR ASTM D5249, TYPE 2. PRE MOLDED JOINT FILLER SHALL BE A NON STAINING, NON BLEEDING TYPE. PRODUCTS SUCH AS 'CERAMAR', MANUFACTURED BY W. R. MEADOWS, OR AN APPROVED EQUAL WILL BE ACCEPTABLE. CORK IS NOT AN ACCEPTABLE JOINT FILLER MATERIAL.
6. SELF LEVELING ELASTOMERIC SEALANT SHALL BE SIKA FLEX 1CSL OR AN APPROVED EQUAL.
7. PREMOLDED JOINT FILLER AND SELF LEVELING ELASTOMERIC SEALANT SHALL BE INCIDENTAL TO ITEM 502.262, STRUCTURAL CONCRETE, PAVEMENT SLABS.
8. GRAVELS BELOW, BESIDE AND ABOVE THE TUNNEL SHALL BE COMPACTED TO 98% COMPACTION.
9. ALL REINFORCING STEEL SHALL HAVE 2" COVER UNLESS NOTED OTHERWISE.
10. CHAMFER ALL EXPOSED EDGES OF CONCRETE ¾" UNLESS NOTED OTHERWISE.
11. ALL EXPOSED CONCRETE SURFACES SHALL RECEIVE A CLEAR PROTECTIVE COATING IN ACCORDANCE WITH THE PROJECT SPECIFICATIONS.
12. THE CONTRACTOR SHALL SUBMIT NORTH TUNNEL ENTRANCE ROOF TRUSS DESIGN FOR REVIEW AND APPROVAL. THE ROOF TRUSS DESIGN SHALL BE STAMPED AND SIGNED BY A MAINE PE. THE ROOF TRUSSES SHALL BE PAID FOR UNDER ITEM 800.40 TUNNEL ENCLOSURES.

INDEX OF STRUCTURAL DRAWINGS	SHEET NO.
STRUCTURAL GENERAL NOTES	S-01
STRUCTURAL GENERAL PLAN	S-02
CONSTRUCTION SEQUENCE - PHASES 1 AND 2 PLAN AND ELEVATION	S-03
CONSTRUCTION SEQUENCE - PHASES 3 AND 4 PLAN AND ELEVATION	S-04
TUNNEL - PLAN	S-05
TUNNEL - SECTIONS AND SOUTHERN ENCLOSURE	S-06
TUNNEL - SECTIONS AND ENCLOSURES	S-07
TUNNEL - CROSS SECTION & CONNECTION DETAILS	S-08
PROPOSED CASH LANES - STRUCTURAL SLAB DETAILS	S-09
PROPOSED CASH LANES - ISLAND LAYOUT	S-10
PROPOSED CASH LANES - ISLAND DETAILS	S-11
PROPOSED CASH LANES - BOOTH ENCLOSURE DETAILS	S-12
PROPOSED CASH LANES - ISLAND PIT DETAILS	S-13
PROPOSED CASH LANES - ISLAND EXTENSION DETAILS	S-14
PROPOSED CASH LANES - ISLAND BARRIER	S-15
PROPOSED CASH LANES - ISLAND BARRIER DETAILS	S-16
CASH LANE REHAB - STRUCTURAL SLAB DETAILS	S-17
CASH LANE REHAB - ISLAND EXTENSION DETAILS	S-18
REINFORCEMENT SCHEDULE 1	S-19
REINFORCEMENT SCHEDULE 2	S-20
ORT SPACE FRAME - PLAN AND ELEVATION	S-21
ORT SPACE FRAME - FOUNDATION DETAILS	S-22
ORT SPACE FRAME - POST DETAILS	S-23
ORT SPACE FRAME - MOUNTING BRACKET ASSEMBLY DETAILS	S-24
CANOPY - FRAMING AND DETAILS	S-25
CANOPY - SECTIONS AND DETAILS	S-26
CANOPY - ROOFING DETAILS	S-27
CANOPY - SIGN SUPPORT DETAILS	S-28
ORT SLAB - PLAN	S-29
FALMOUTH ROAD - BRIDGE MOUNTED SIGN SUPPORT	S-30

Date:5/15/2015

Filename: 090_Structural General Notes.dgn

Scale:

No.	Revision	By	Date

Designed by: HNTB

CONSULTANT PROJECT MANAGER: R. Bruce Munger, P.E.

	By	Date		By	Date
Designed	GLS	05/15	Checked	AJF	05/15
Drawn	PDB	05/15	In Charge of	RAL	05/15

HNTB CORPORATION
340 County Road, Suite 6-C
Westbrook, ME 04092
TEL (207) 774-5155
FAX (207) 228-0909

MAINE TURNPIKE

THE GOLD STAR MEMORIAL HIGHWAY

MTA PROJECT MANAGER: William Yates

FALMOUTH SPUR TOLL PLAZA
ORT CONVERSION

STRUCTURAL GENERAL NOTES

SHEET NUMBER: S-01

CONTRACT:2015.13

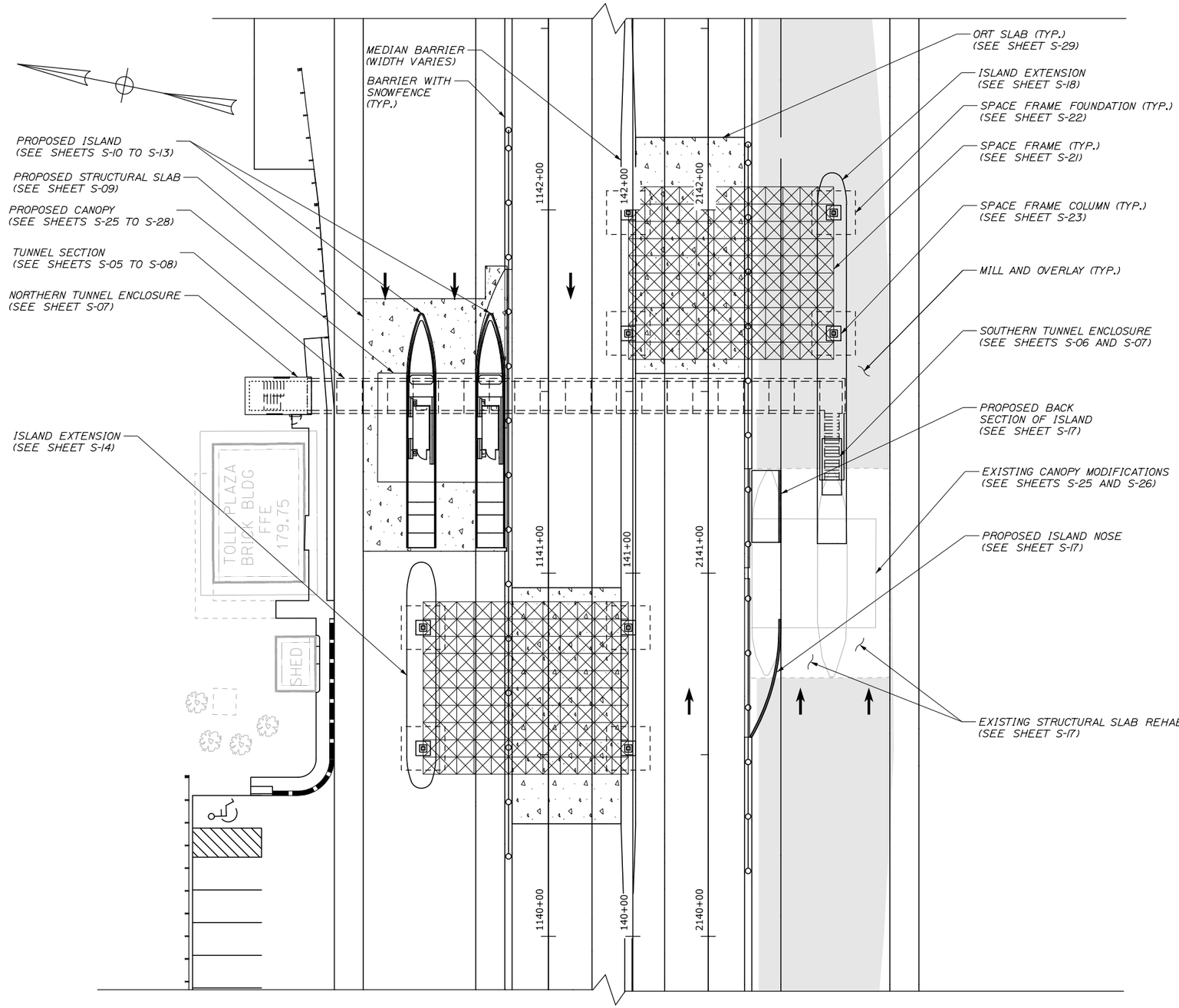

Date:5/15/2015

Filename: 091_StructuralGeneralPlan.dgn

Scale: NOT TO SCALE

No.	Revision	By	Date

Designed by: HNTB

CONSULTANT PROJECT MANAGER: R. Bruce Munger, P.E.

	By	Date		By	Date
Designed	GLS	05/15	Checked	AJF	05/15
Drawn	PEB	05/15	In Charge of	RAL	05/15

HNTB CORPORATION
340 County Road, Suite 6-C
Westbrook, ME 04092
TEL (207) 774-5155
FAX (207) 228-0909

MAINE TURNPIKE

THE GOLD STAR MEMORIAL HIGHWAY

MTA PROJECT MANAGER: William Yates

FALMOUTH SPUR TOLL PLAZA ORT CONVERSION

STRUCTURAL GENERAL PLAN

SHEET NUMBER: S-02

CONTRACT:2015.13

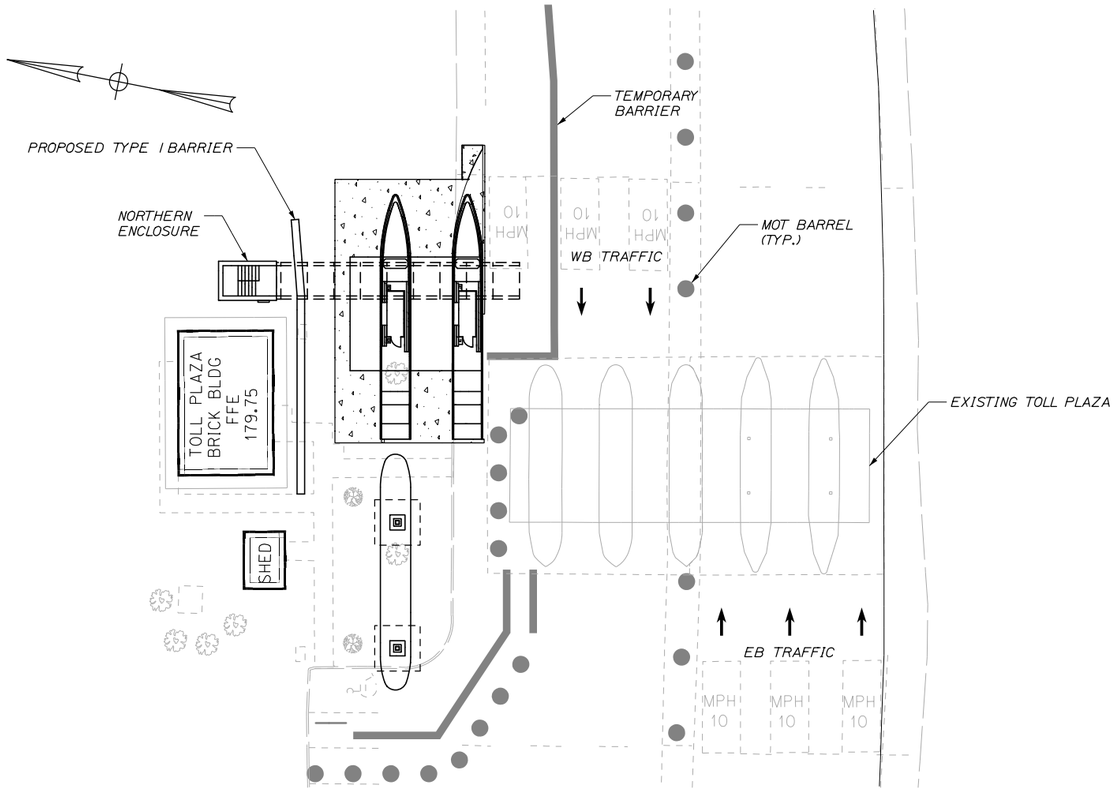

PHASE I PLAN
SCALE: 1" = 20'-0"

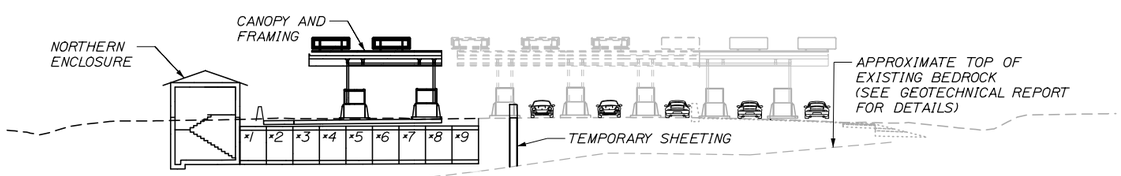

PHASE I ELEVATION
SCALE: 1" = 20'-0"

PHASE I WORK

1. EXCAVATE:
   - A. NORTHERN ENCLOSURE
   - B. TUNNEL SECTIONS 1-9
   - C. BOOTH PITS AND REAR CANOPY SUPPORT FOUNDATION
   - D. SPACE FRAME FOUNDATION
2. INSTALL:
   - A. NORTHERN STAIRCASE
   - B. TUNNEL SECTIONS 1-9
   - C. STRUCTURAL SLAB
   - D. ISLAND SLAB
   - E. ISLAND BUMPERS
   - F. BOOTH ENCLOSURES
   - G. CANOPY FRAMING, BASE PLATES AND ANCHOR BOLTS
   - H. CANOPY
   - I. UTILITY PITS AND REAR COLUMN FOUNDATIONS
   - J. ISLAND EXTENSION (ISLAND A)
   - K. SPACE FRAME PEDESTALS AND FOOTINGS
   - L. SPACE FRAME ANCHOR BOLTS
   - M. TYPE I BARRIER

NOTES:
1. FOR MAINTENANCE OF TRAFFIC DETAILS SEE SHEETS MOT-1A AND MOT-1B.
2. MOT DEVICES SCREENED FOR CLARITY.

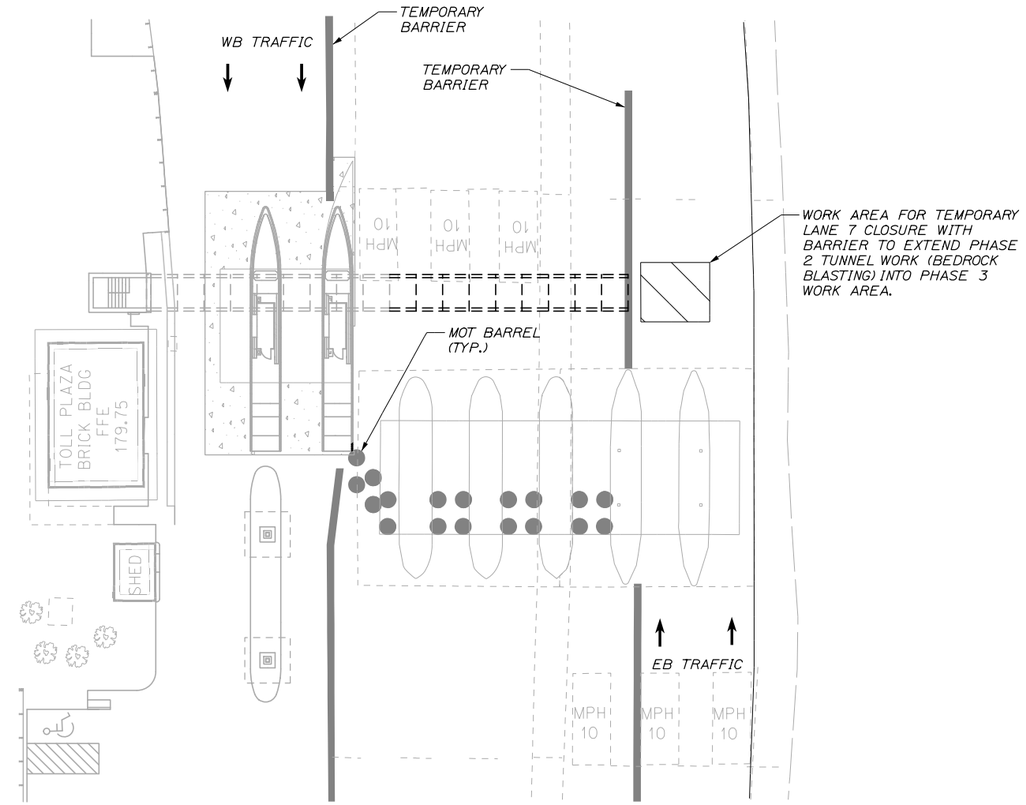

PHASE 2 PLAN
SCALE: 1" = 20'-0"

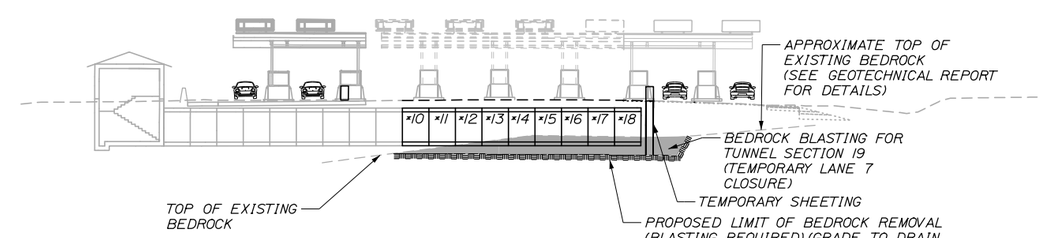

PHASE 2 ELEVATION
SCALE: 1" = 20'-0"

PHASE 2 WORK

1. EXCAVATE
   - A. TUNNEL SECTIONS 10-18
2. BEDROCK BLASTING
   - A. SEE SHEET S-06 FOR PROPOSED BEDROCK ELEVATIONS
3. INSTALL:
   - A. TUNNEL SECTIONS 10-18

NOTES:
1. FOR MAINTENANCE OF TRAFFIC DETAILS SEE SHEET MOT-2.
2. MOT DEVICES SCREENED FOR CLARITY.

Date:5/15/2015

Filename: 092_Structural Phase 1 and 2.dgn

Scale: 20 0 20 40
SCALE IN FEET

No.	Revision	By	Date

Designed by: HNTB

CONSULTANT PROJECT MANAGER: R. Bruce Munger, P.E.

	By	Date		By	Date
Designed	GLS	05/15	Checked	AJF	05/15
Drawn	PEB	05/15	In Charge of	RAL	05/15

HNTB CORPORATION
340 County Road, Suite 6-C
Westbrook, ME 04092
TEL (207) 774-5155
FAX (207) 228-0909

MAINE TURNPIKE

THE GOLD STAR MEMORIAL HIGHWAY

MTA PROJECT MANAGER: William Yates

FALMOUTH SPUR TOLL PLAZA ORT CONVERSION

CONSTRUCTION SEQUENCE PHASES 1 AND 2 PLAN AND ELEVATION

SHEET NUMBER: S-03

CONTRACT:2015.13

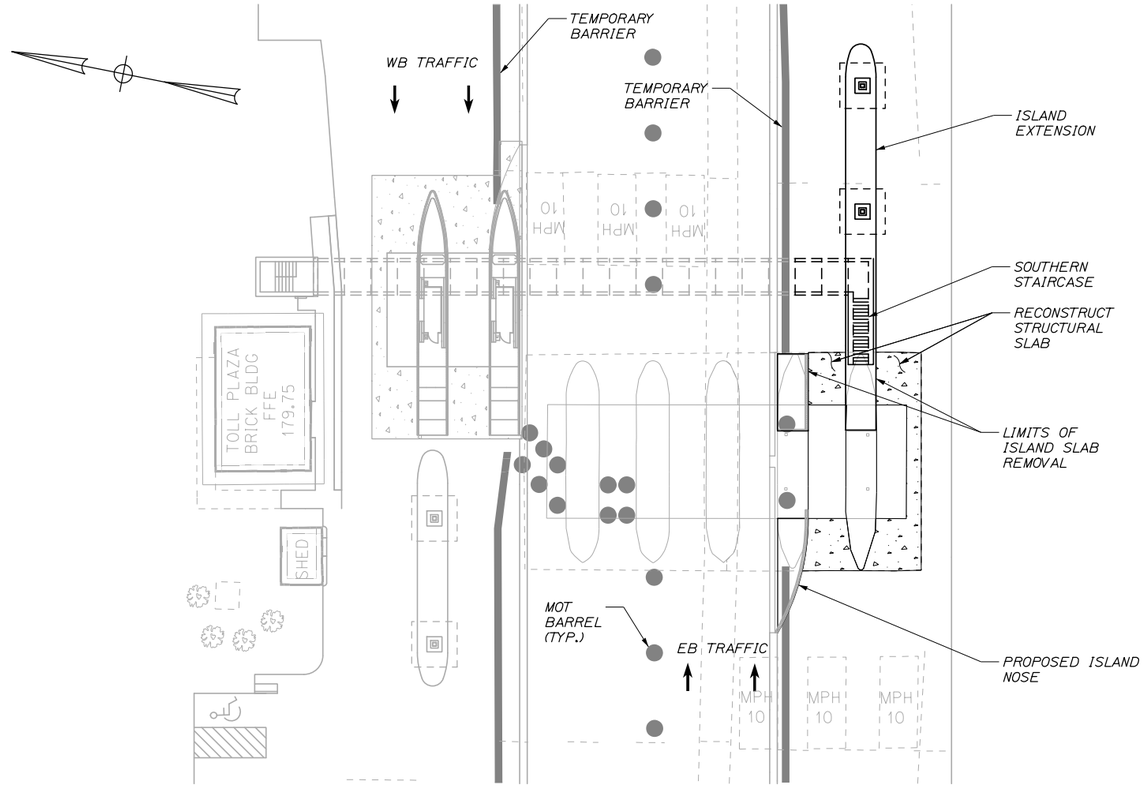

PHASE 3 PLAN

SCALE: 1" = 20'-0"

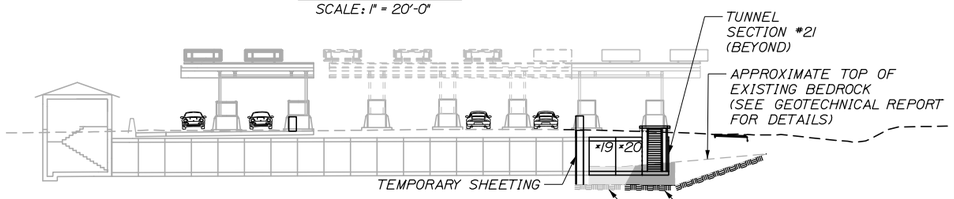

PHASE 3 ELEVATION

SCALE: 1" = 20'-0"

PHASE 3 WORK:

1. EXCAVATE:
   - A. TUNNEL SECTIONS 19-21
   - B. SOUTHERN ENCLOSURE
   - C. SPACE FRAME FOUNDATION
2. BEDROCK BLASTING
3. INSTALL:
   - A. SOUTHERN STAIRCASE
   - B. TUNNEL SECTION 19-21
   - C. ISLAND EXTENSION (ISLAND G)
   - D. SPACE FRAME PEDESTALS AND FOOTINGS
   - E. SPACE FRAME ANCHOR BOLTS
4. REMOVE:
   - A. ISLAND G (TO BOOTH ENCLOSURE ON ISLAND EXTENSION SIDE)
   - B. ISLAND F
     - a. EXISTING ISLAND NOSE
     - b. TAIL END OF ISLAND SLAB (TO BOOTH ENCLOSURE)
5. RECONSTRUCT:
   - A. ISLAND F NOSE (ISLAND SLAB AND CURB)
   - B. ISLAND F TAIL END (ISLAND SLAB AND CURB)
   - C. STRUCTURAL SLAB

NOTES:

1. FOR MAINTANENCE OF TRAFFIC DETAILS SEE SHEET MOT-3.
2. MOT DEVICES SCREENED FOR CLARITY.

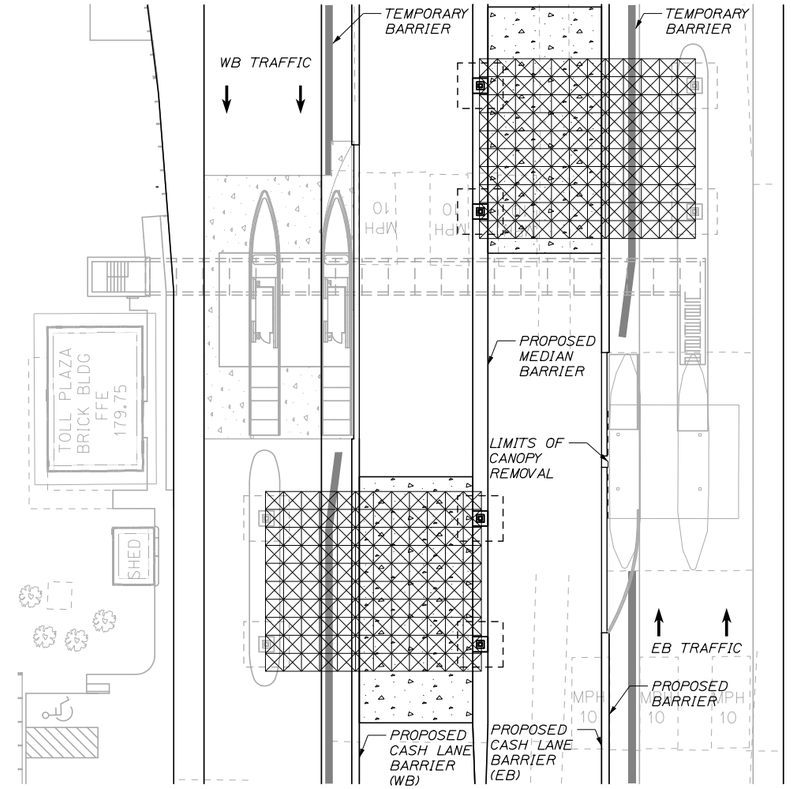

PHASE 4 PLAN

SCALE: 1" = 20'-0"

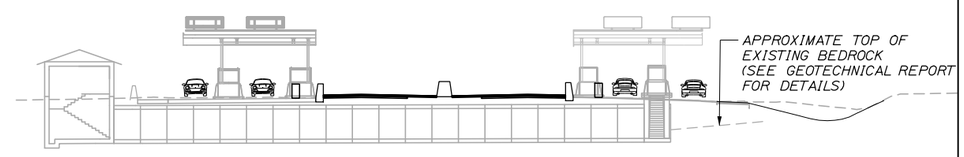

PHASE 4 ELEVATION

SCALE: 1" = 20'-0"

PHASE 4 WORK:

1. INSTALL:
   - A. ORT SLABS
   - B. MEDIAN BARRIER
   - C. CASH LANE BARRIER (EB AND WB)
   - D. MEDIAN PEDESTALS AND FOOTINGS
   - E. SPACE FRAME ANCHOR BOLTS
   - F. SPACE FRAME BASE PLATES (MEDIAN)
   - G. SPACE FRAME COLUMNS
   - H. SPACE FRAMES
2. REMOVE:
   - A. EXISTING TOLL ISLANDS
   - B. STRUCTURAL SLAB
   - C. EXISTING CANOPY (LIMITS SHOWN ABOVE)
3. REHAB:
   - A. REMAINING CANOPY FASCIA

NOTES:

1. FOR MAINTANENCE OF TRAFFIC DETAILS SEE SHEET MOT-4.
2. MOT DEVICES SCREENED FOR CLARITY.

Scale: 20 0 20 40 SCALE IN FEET

No.	Revision	By	Date

Designed by: HNTB

CONSULTANT PROJECT MANAGER: R. Bruce Munger, P.E.

	By	Date		By	Date
Designed	GLS	05/15	Checked	AJF	05/15
Drawn	PEB	05/15	In Charge of	RAL	05/15

HNTB CORPORATION
340 County Road, Suite 6-C
Westbrook, ME 04092
TEL (207) 774-5155
FAX (207) 228-0909

MAINE TURNPIKE

THE GOLD STAR MEMORIAL HIGHWAY

MTA PROJECT MANAGER: William Yates

FALMOUTH SPUR TOLL PLAZA ORT CONVERSION

CONSTRUCTION SEQUENCE PHASES 3 AND 4 PLAN AND ELEVATION

SHEET NUMBER: S-04

CONTRACT: 2015.13

Date: 5/15/2015

Filename: 093_StructuralPhase 3 and 4.dgn

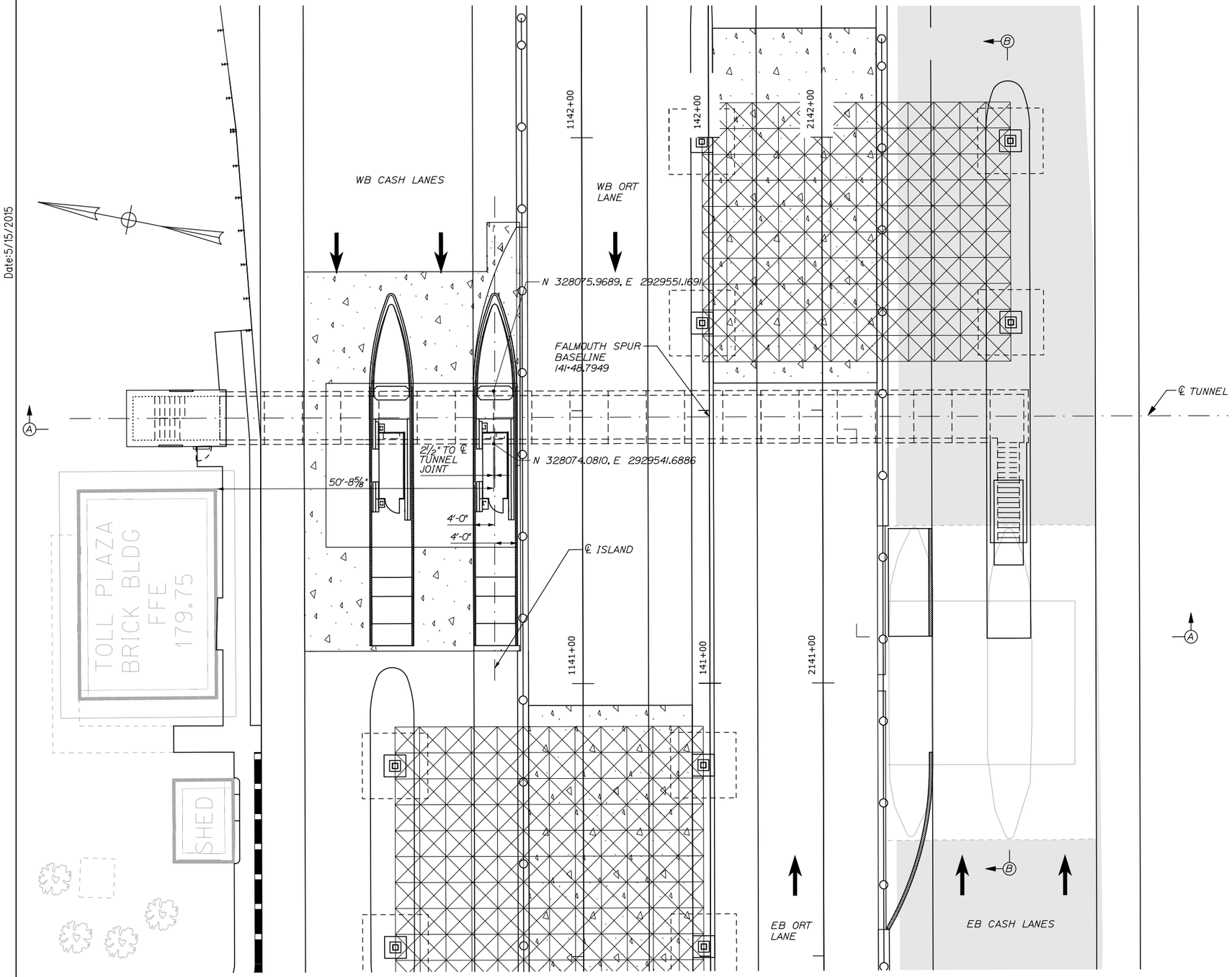

NOTES:

1. SOIL COVER OVER TUNNEL WILL VARY. MAX= 2'-0", MIN= 0'-3"
2. PRECAST MANUFACTURER SHALL DESIGN TUNNEL FOR AN AASHTO HL-93 LIVE LOAD, ADJUSTED FOR DYNAMIC LOAD ALLOWANCE AND MULTIPLE PRESENCE FACTOR.
3. TUNNEL SHALL CONFORM TO ASTM STANDARDS REFERENCED IN CONTRACT SPECIFICATIONS.
4. CONTRACTOR SHALL CONSTRUCT AND TEST TUNNEL IN ACCORDANCE WITH THE CONTRACT SPECIFICATIONS TO ENSURE ALL JOINTS AND PENETRATIONS ARE WATER TIGHT. SEE SPECIAL PROVISION 535.
5. CONTRACTOR SHALL VERIFY TUNNEL LOCATION WITH RESIDENT.
6. FOR SECTIONS A-A AND B-B SEE SHEET S-06.

Date:5/15/2015

Filename: 094_Tunnel Plan.dgn

Scale: 10 0 10 20
SCALE IN FEET

No.	Revision	By	Date

Designed by: HNTB

CONSULTANT PROJECT MANAGER: R. Bruce Munger, P.E.

	By	Date		By	Date
Designed	GLS	05/15	Checked	AJF	05/15
Drawn	PEB	05/15	In Charge of	RAL	05/15

HNTB CORPORATION
340 County Road, Suite 6-C
Westbrook, ME 04092
TEL (207) 774-5155
FAX (207) 228-0909

MAINE TURNPIKE

THE GOLD STAR MEMORIAL HIGHWAY

MTA PROJECT MANAGER: William Yates

FALMOUTH SPUR TOLL PLAZA
ORT CONVERSION

TUNNEL
PLAN

SHEET NUMBER: S-05

CONTRACT:2015.13

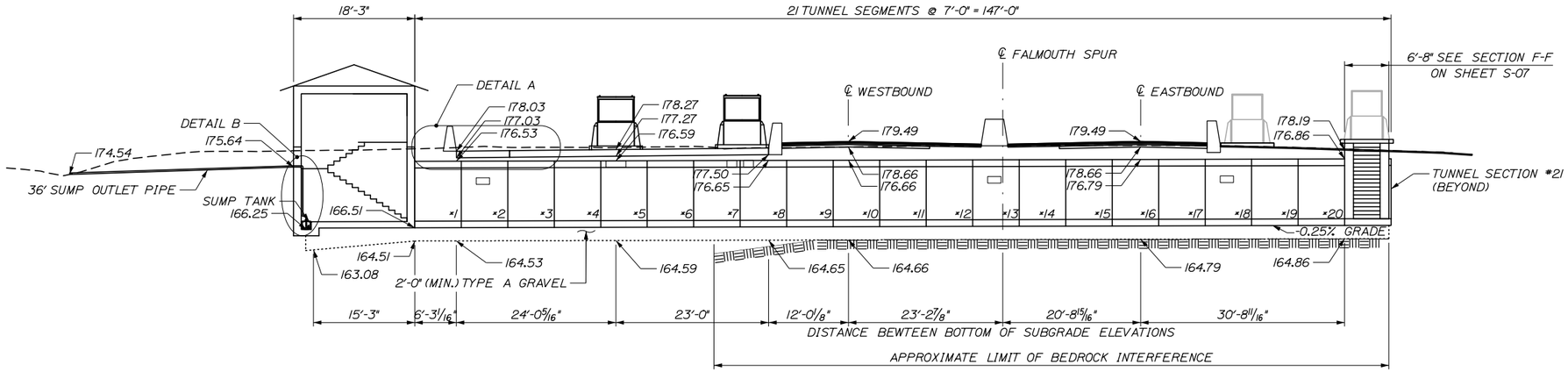

SECTION A-A
1" = 10'-0"

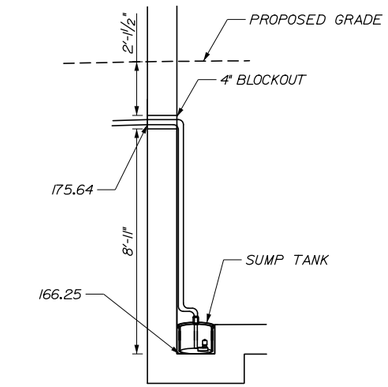

DETAIL B
NTS

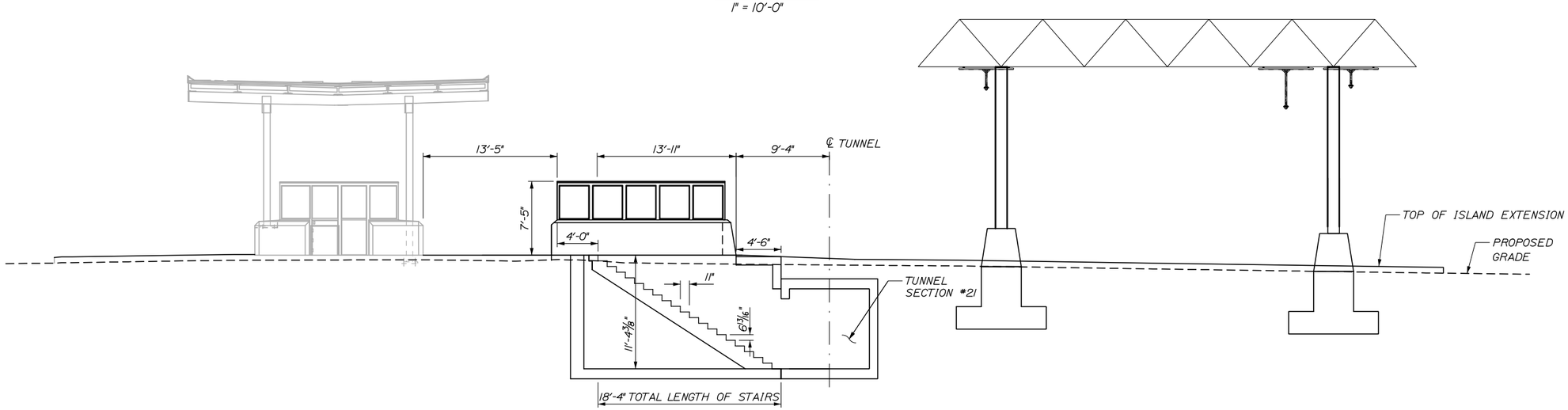

SECTION B-B
1" = 6'-0"

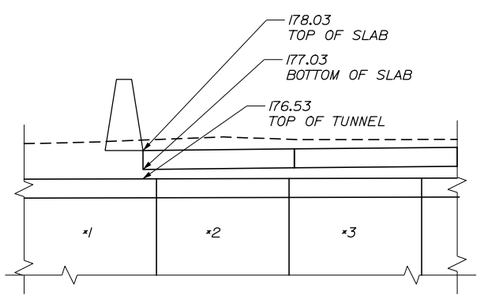

DETAIL A
1/4" = 1'-0"

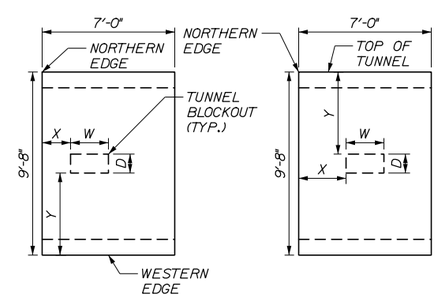

BLOCKOUT PLAN
1/4" = 1'-0"

BLOCKOUT ELEVATION
1/4" = 1'-0"

TUNNEL SIDEWALL BLOCKOUTS (SEE BLOCKOUT ELEVATION)					
SECTION	WALL	DISTANCE FROM NORTH EDGE (X)	DISTANCE FROM TOP (Y)	BLOCKOUT SIZE	SLEEVES (I.D.)
#2	WEST	2'-3"	1'-6"	2'-0" (W) X 1'-0" (D)	6-3" AND 2-1.5"
#13	EAST AND WEST	2'-3"	1'-6"	2'-0" (W) X 1'-0" (D)	6-3" AND 1-4"
#18	WEST	1-0"	1'-6"	2'-6" (W) X 1'-0" (D)	6-3" AND 2-6"
#21	EAST	2'-3"	1'-6"	2'-0" (W) X 1'-0" (D)	6-3" AND 2-1.5"

TUNNEL CEILING BLOCKOUTS (SEE BLOCKOUT PLAN)					
SECTION	WALL	DISTANCE FROM NORTH EDGE (X)	DISTANCE FROM WEST EDGE (Y)	BLOCKOUT SIZE	SLEEVES (I.D.)
#5	CEILING	0'-9.5"	1'-0"	3'-0" (W) X 1'-0" (D)	
#7	CEILING	5'-6"	1'-0"	1'-0" (W) X 1'-0" (D)	
#8	CEILING	0'-6"	1'-0"	1'-6" (W) X 1'-0" (D)	

Date:5/15/2015

Filename: 095_TunnelSection.dgn

Scale:

No.	Revision	By	Date

Designed by:

HNTB

CONSULTANT PROJECT MANAGER: R. Bruce Munger, P.E.

	By	Date		By	Date
Designed	GLS	05/15	Checked	AJF	05/15
Drawn	RJT	05/15	In Charge of	RAL	05/15

HNTB CORPORATION
340 County Road, Suite 6-C
Westbrook, ME 04092
TEL (207) 774-5155
FAX (207) 228-0909

MAINE TURNPIKE

THE GOLD STAR MEMORIAL HIGHWAY

MTA PROJECT MANAGER: William Yates

FALMOUTH SPUR TOLL PLAZA
ORT CONVERSION
TUNNEL
SECTIONS AND SOUTHERN ENCLOSURE

SHEET NUMBER: S-06

CONTRACT:2015.13

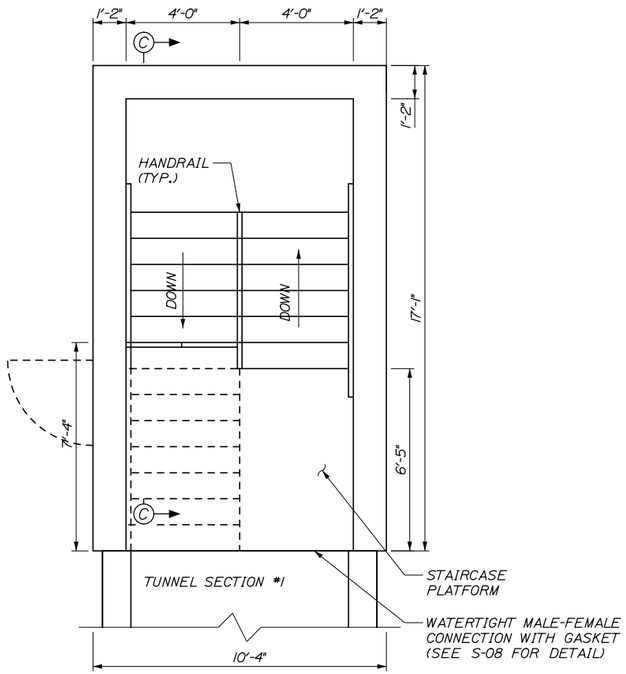

NORTHERN STAIRCASE PLAN
3/8" = 1'-0"

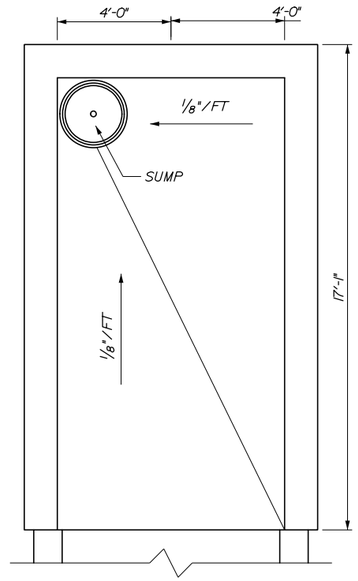

NORTHERN STAIRCASE FLOOR PLAN
3/8" = 1'-0"

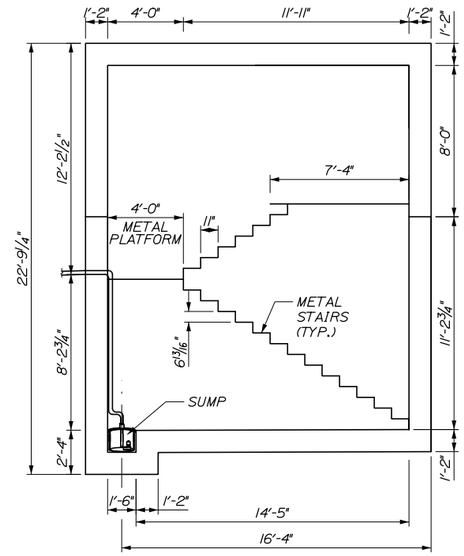

SECTION C-C
1/4" = 1'-0"

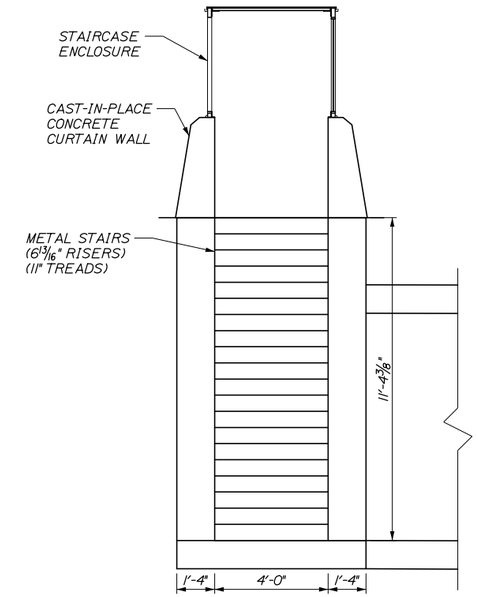

SECTION D-D
3/8" = 1'-0"

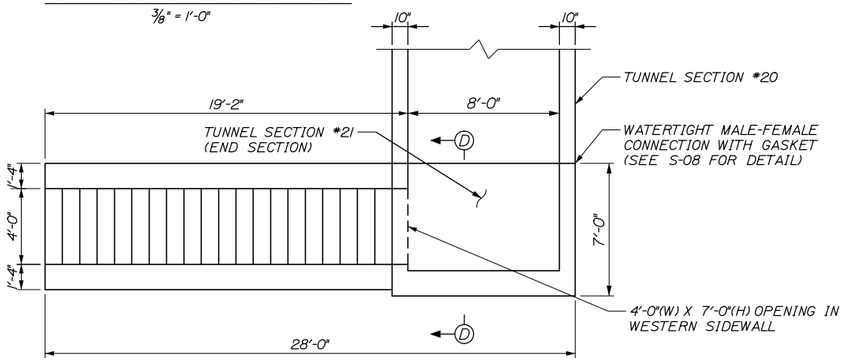

SOUTHERN STAIRCASE PLAN
1/4" = 1'-0"

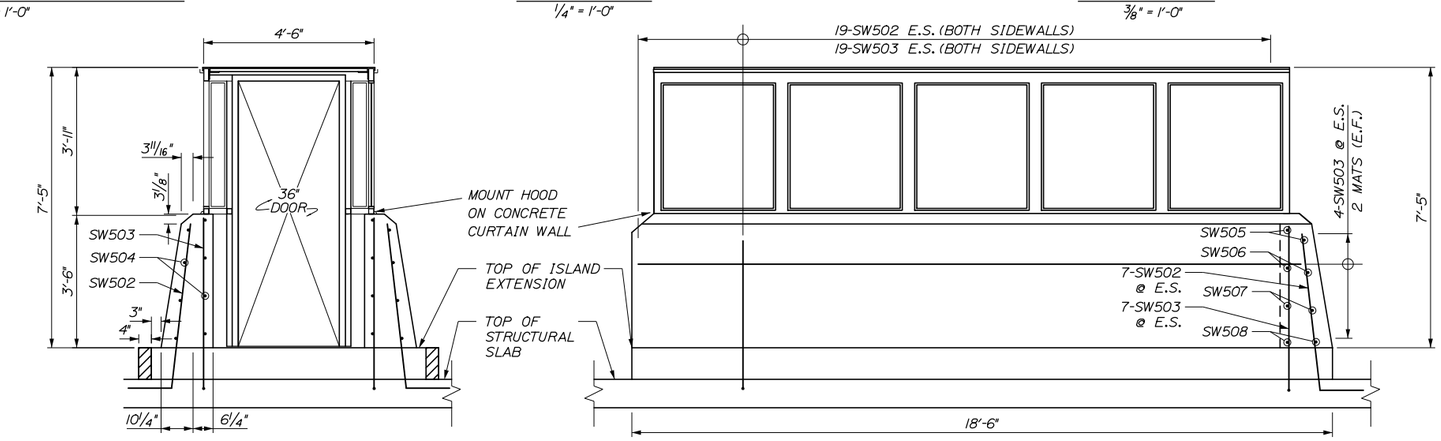

SOUTHERN STAIRCASE ENCLOSURE ELEVATION
1/2" = 1'-0"

NOTES:

1. METAL STAIRS SHALL INCLUDE HANDRAILS ON EACH SIDE OF THE STAIRCASE, AND SUPPORTS TO THE CONCRETE WALL.
2. TOP PORTION OF ENCLOSURE IS SCHEMATIC, SEE ARCHITECTURAL PLAN SHEETS FOR DETAIL.
3. NORTHERN AND SOUTHERN PRECAST ENCLOSURES SHALL HAVE A WATERTIGHT CONNECTION TO EXTERIOR TUNNEL SECTIONS.
4. REINFORCEMENT FOR PRECAST CONCRETE ELEMENTS TO BE PROVIDED BY MANUFACTURER

Date:5/15/2015

Filename: 096_Tunnel Details 1.dgn

Scale:

No.	Revision	By	Date

Designed by:

HNTB

CONSULTANT PROJECT MANAGER: R. Bruce Munger, P.E.

	By	Date		By	Date
Designed	GLS	05/15	Checked	AJF	05/15
Drawn	PEB	05/15	In Charge of	RAL	05/15

HNTB CORPORATION
340 County Road, Suite 6-C
Westbrook, ME 04092
TEL (207) 774-5155
FAX (207) 228-0909

MAINE TURNPIKE

THE GOLD STAR MEMORIAL HIGHWAY

MTA PROJECT MANAGER: William Yates

FALMOUTH SPUR TOLL PLAZA
ORT CONVERSION
TUNNEL
SECTIONS AND ENCLOSURES

SHEET NUMBER: S-07

CONTRACT:2015.13

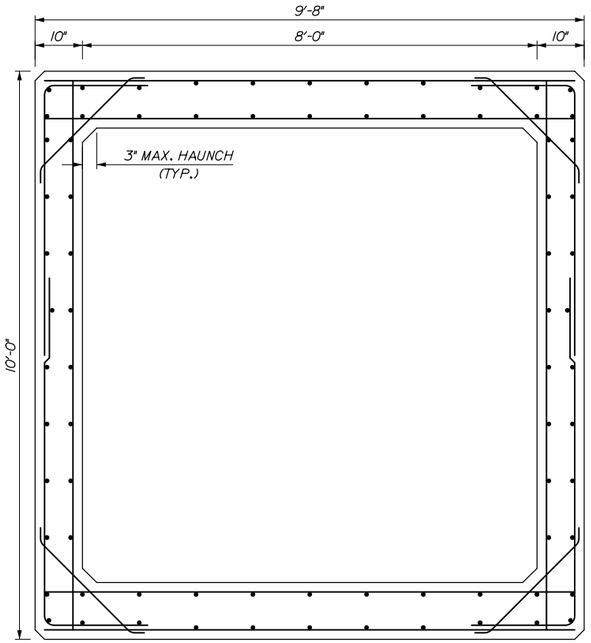

TUNNEL SECTION
3/4" = 1'-0"

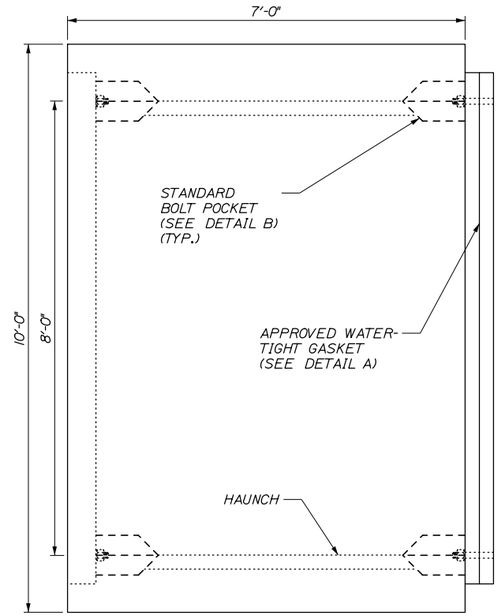

ELEVATION VIEW
3/4" = 1'-0"

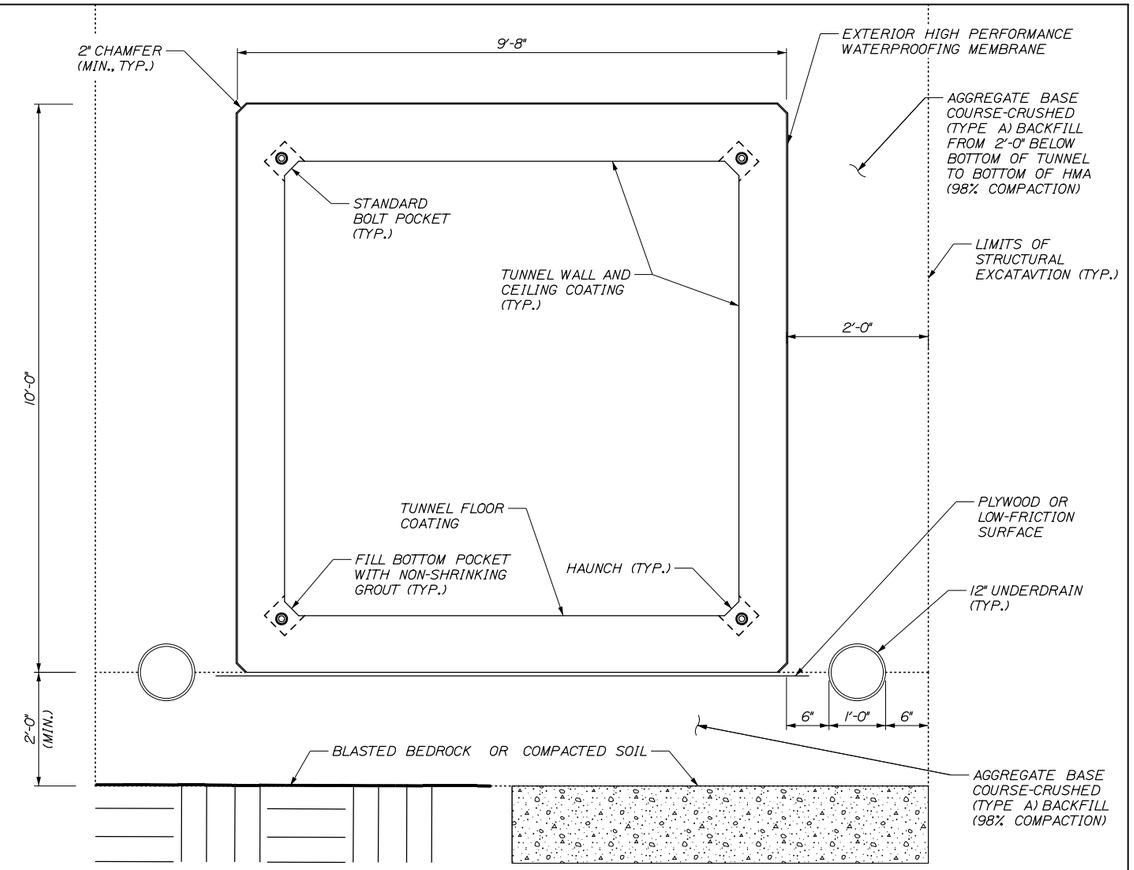

END VIEW
3/4" = 1'-0"

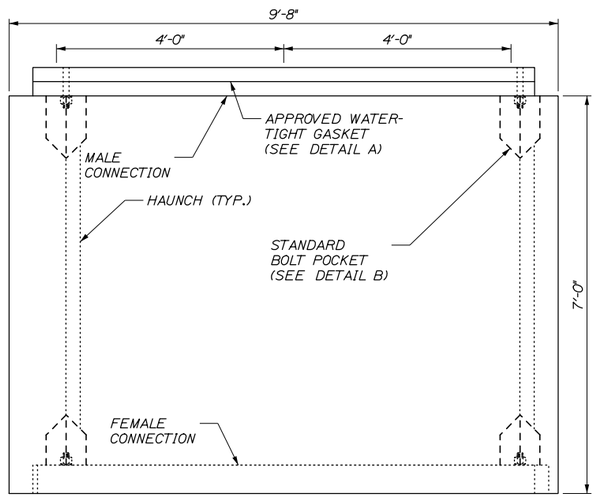

PLAN VIEW
3/4" = 1'-0"

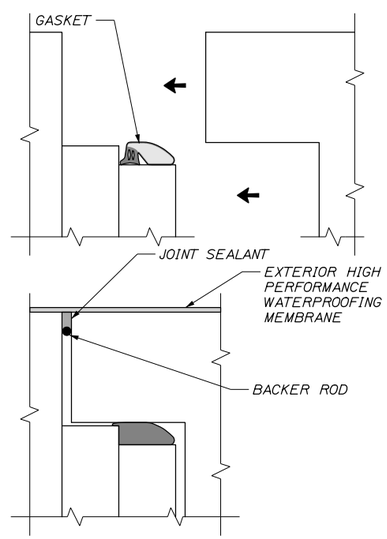

DETAIL A
NTS

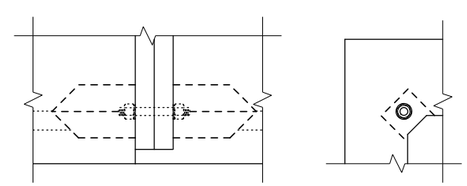

DETAIL B
NTS

NOTES:

1. CONTRACTOR SHALL USE PLYWOOD OR A LOW-FRICTION SURFACE METHOD TO ENSURE ROCKS AND DEBRIS DO NOT ENTER TUNNEL JOINTS DURING INSTALLATION.

2. FOR TOP OF TYPE A GRAVEL OR BLASTED LEDGE. ELEVATIONS SEE SHEET S-06.

3. REINFORCEMENT SHOWN FOR GRAPHICAL PURPOSES ONLY.

Date:5/15/2015

Filename: 097_TunnelDetails 2.dgn

Scale: AS NOTED

No.	Revision	By	Date

Designed by: HNTB

CONSULTANT PROJECT MANAGER: R. Bruce Munger, P.E.

	By	Date		By	Date
Designed	GLS	05/15	Checked	AJF	05/15
Drawn	PDB	05/15	In Charge of	RAL	05/15

HNTB CORPORATION
340 County Road, Suite 6-C
Westbrook, ME 04092
TEL (207) 774-5155
FAX (207) 228-0909

MAINE TURNPIKE

THE GOLD STAR MEMORIAL HIGHWAY

MTA PROJECT MANAGER: William Yates

FALMOUTH SPUR TOLL PLAZA
ORT CONVERSION
TUNNEL
CROSS SECTION & CONNECTION DETAILS

SHEET NUMBER: S-08

CONTRACT:2015.13

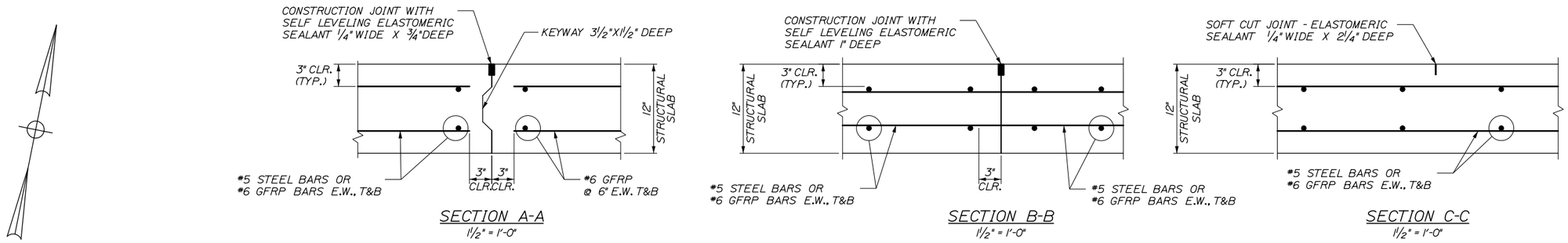

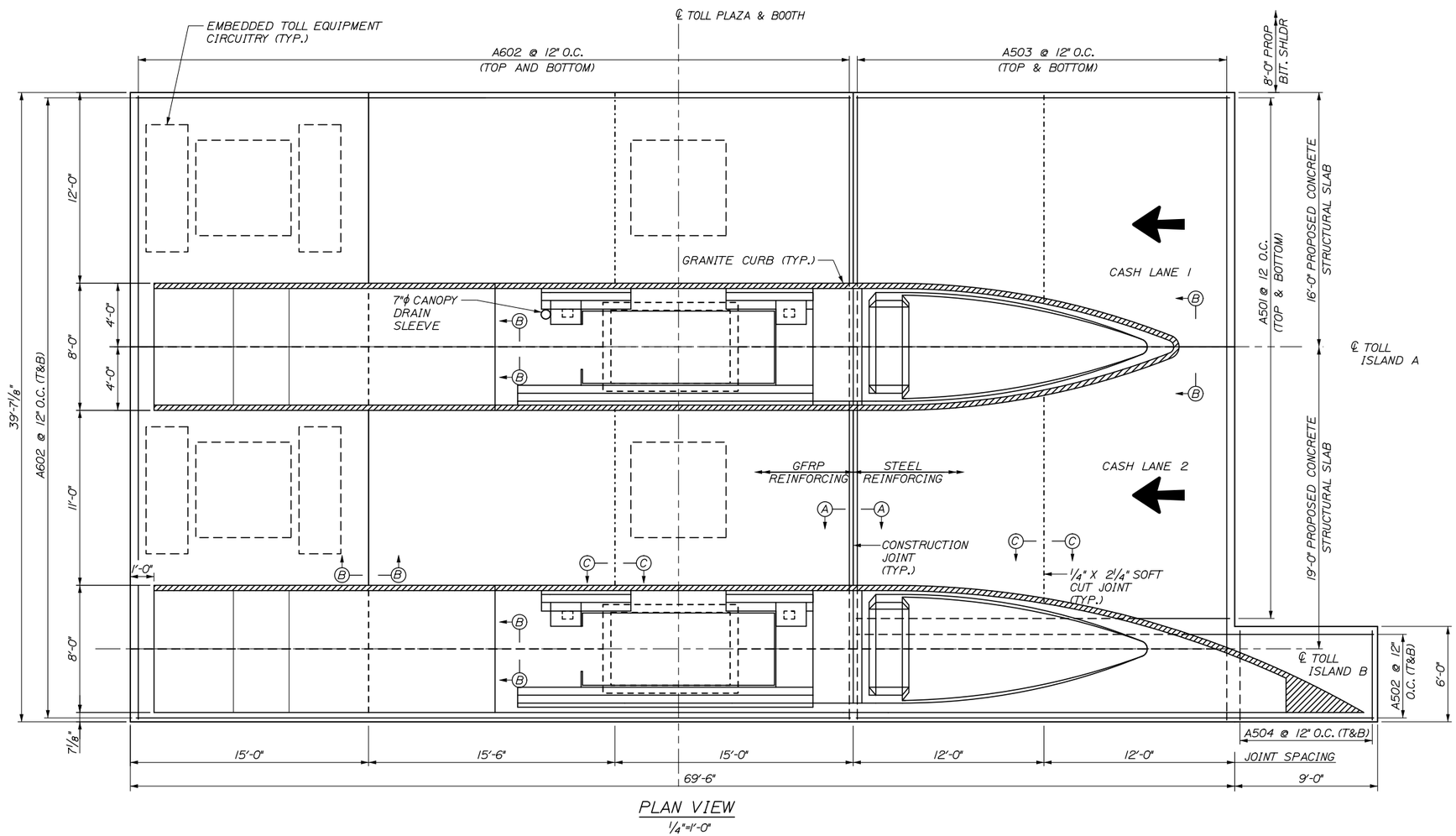

PLAN VIEW
1/4"=1'-0"

MARK	SIZE	NO.	LENGTH	TYPE	A	B	C	D	LOCATION AND REMARKS
STRUCTURAL SLAB (STEEL)									
A501	5	70	23'-6"	STR					LONGITUDINAL
A502	5	14	32'-6"	STR					LONGITUDINAL
A503	5	50	39'-1"	STR					TRANSVERSE
A504	5	20	5'-6"	STR					TRANSVERSE
STRUCTURAL SLAB (GFRP)									
A601	6	182	45'-0"	STR					LONGITUDINAL
A602	6	160	39'-1"	STR					TRANSVERSE

NOTES:

1. PREFORMED JOINT MATERIAL SHALL CONFORM TO THE CROSS SECTION OF THE PAVEMENT AND BE FURNISHED IN STRIPS EQUAL TO THE PAVEMENT WIDTH.

2. CONSTRUCT ALL TRANSVERSE JOINTS PERPENDICULAR TO THE CENTERLINE.

3. NO HOLE SHALL BE DRILLED CLOSER THAN 3" FROM THE EXISTING EDGE OF CONCRETE.

4. SELF LEVELING ELASTOMERIC SEALANT SHALL BE SIKAFLEX IC-SL OR AN APPROVED EQUAL AND SHALL BE INCIDENTAL TO ITEM 502.262, STRUCTURAL CONCRETE ROADWAY SLAB ON GRADE.

5. SOFT CUT JOINTS TO BE CUT WITHIN 4 TO 6 HOURS OF INITIAL CONCRETE SET.

6. FOR TOLL EQUIPMENT CIRCUITRY, LOCATION AND DEPTH WITHIN SLAB, SEE SHEET E-2.

7. GENERAL CONTRACTOR TO CUT LONGITUDINAL AND TRANSVERSE GFRP FOR BOOTH PIT OPENINGS. CUT PIECES TO BE USED FOR CORNERS AND ADDITIONAL REINFORCING AS DIRECTED BY ENGINEER.

8. SLAB SECTIONS EITHER SIDE OF FULL DEPTH CONSTRUCTION JOINT AND BULKHEAD JOINT TO BE PLACED A MINIMUM OF 24 HOURS APART.

Scale:

No.	Revision	By	Date

Designed by: HNTB

CONSULTANT PROJECT MANAGER: R. Bruce Munger, P.E.

	By	Date		By	Date
Designed	GLS	05/15	Checked	AJF	05/15
Drawn	PEB	05/15	In Charge of	RAL	05/15

HNTB CORPORATION
340 County Road, Suite 6-C
Westbrook, ME 04092
TEL (207) 774-5155
FAX (207) 228-0909

MAINE TURNPIKE

THE GOLD STAR MEMORIAL HIGHWAY

MTA PROJECT MANAGER: William Yates

FALMOUTH SPUR TOLL PLAZA
ORT CONVERSION

PROPOSED CASH LANES
STRUCTURAL SLAB DETAILS

SHEET NUMBER: S-09

CONTRACT: 2105.13

Date: 5/15/2015

Filename: 098_PropCashLaneSlab.dgn

ISLAND ELEVATIONS			
ISLAND	POINT	BOTTOM CURB*	TOP CURB
A	1	178.07	178.65
	2	178.18	178.76
	3	178.33	178.91
	4	178.55	179.13
	5	178.69	178.69
	6	178.77	178.77
	7	178.64	179.22
	8	178.41	178.99
	9	178.26	178.84
B	1	178.25	178.83
	2	178.38	178.96
	3	178.52	179.1
	4	178.74	179.32
	5	178.88	178.88
	6	178.98	178.98
	7	178.83	179.36
	8	178.6	179.18
	9	178.45	179.03

* AT TOP OF LANE SLAB

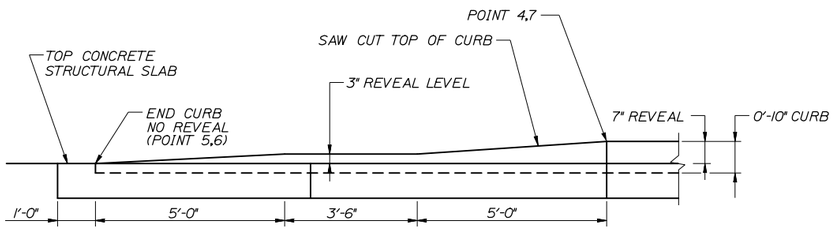

SECTION A-A
1/2" = 1'-0"

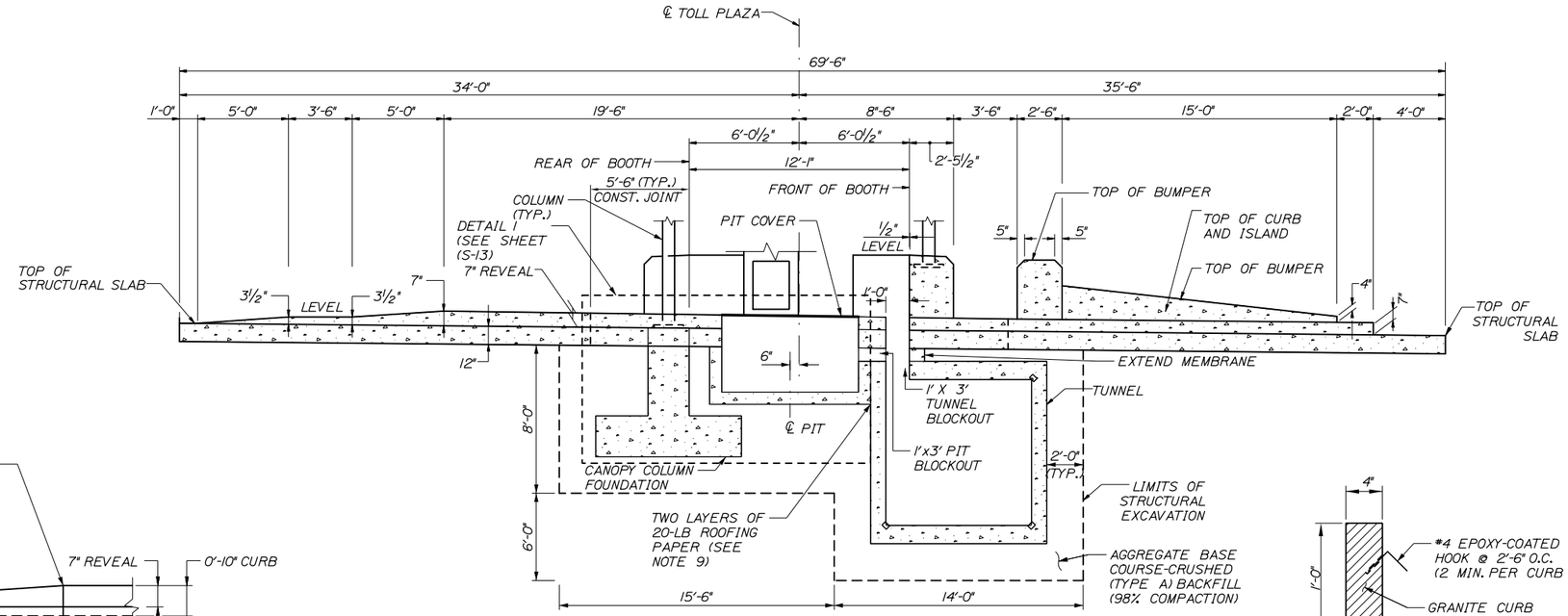

SECTION B-B
1/4" = 1'-0"

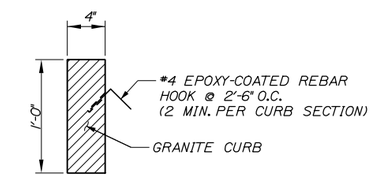

DETAIL I
1/2" = 1'-0"

NOTES:

1. FOR REINFORCING DETAILS OF ISLANDS, SEE SHEETS S-11, S-12 AND S-13.
2. FOR LOCATION OF ELECTRONIC TOLL COLLECTION EQUIPMENT, SEE ELECRICAL PLANS.
3. FOR CONDUITS WITHIN ISLAND AND STRUCTURAL SLAB, SEE ELECTRICAL PLANS.
4. ISLAND SLAB TO HAVE ADDITIONAL CONSTRUCTION JOINTS OR CONTRACTION JOINTS SPACED EVERY 8 FEET OR AS DIRECTED BY THE RESIDENT ENGINEER.
5. GRANITE CURBING JOINTS TO MATCH WITH ISLAND AND BARRIER JOINTS.
6. GRANITE CURBING ON ISLAND SHALL BE PAID FOR UNDER 609.11.
7. SEE SHEET E-4 FOR LOCATION OF FLUSH MOUNTED JUNCTION BOXES.
8. ISLAND B SIMILAR. SEE SHEET S-11 FOR VARIATION IN NOSE PLAN.
9. PLACE TWO LAYERS OF 20-LB ROOFING PAPER BETWEEN THE UTILITY PIT WALL AND TUNNEL WALL.

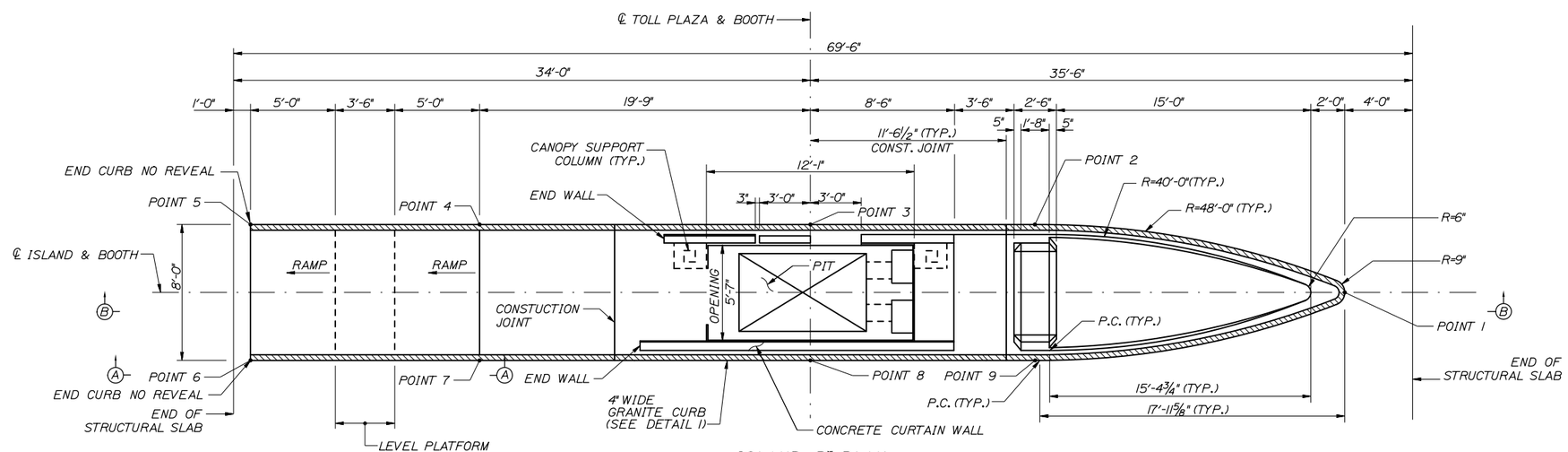

ISLAND B* PLAN
1/4" = 1'-0"
*ISLAND A SIMILAR

Date:5/15/2015

Filename: 099_Prop Island Layout and Elevation.dgn

Scale:			
No.	Revision	By	Date

Designed by:

HNTB

CONSULTANT PROJECT MANAGER: R. Bruce Munger, P.E.

	By	Date		By	Date
Designed	GLS	05/15	Checked	AJF	05/15
Drawn	PEB	05/15	In Charge of	RAL	05/15

HNTB CORPORATION
340 County Road, Suite 6-C
Westbrook, ME 04092
TEL (207) 774-5155
FAX (207) 228-0909

MAINE TURNPIKE

THE GOLD STAR MEMORIAL HIGHWAY

MTA PROJECT MANAGER: William Yates

FALMOUTH SPUR TOLL PLAZA
ORT CONVERSION

PROPOSED CASH LANES
ISLAND LAYOUT

SHEET NUMBER: S-10

CONTRACT:2015.13

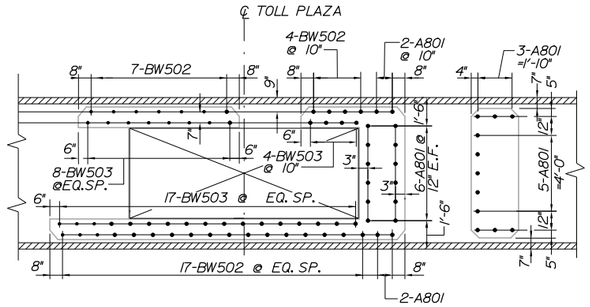

DOWEL LAYOUT AT BOOTH ENCLOSURE
SCALE: 1/4" = 1'-0"

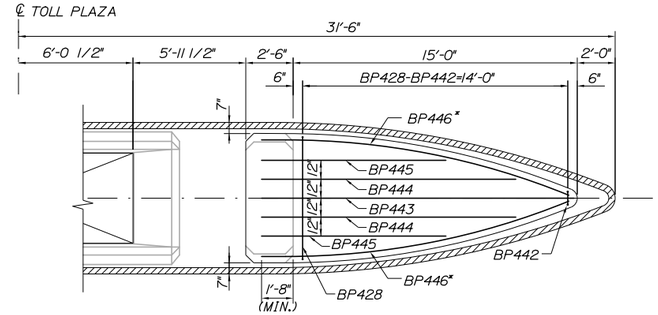

BUMPER REINFORCEMENT PLAN
SCALE: 1/4" = 1'-0"

NOTES:

1. FOR REINFORCEMENT OF STRUCTURAL SLAB, SEE SHEET S-09.
2. FOR PROFILE OF CONCRETE WORK AND ADDITIONAL ISLAND DETAILS AND ELEVATIONS, SEE SHEET S-10.
3. ALL ISLAND SLAB, BOOTH ENCLOSURE, AND BUMPER REINFORCING SHALL BE EPOXY COATED.
4. EXPOSED ISLAND CONCRETE SHALL RECEIVE A CLEAR PROTECTIVE COATING PER SPECIFICATIONS.
5. FOR PIT DETAILS, SEE SHEET S-13.
6. ALL REINFORCING SPACING SHALL BE AT 12", UNLESS OTHERWISE SPECIFIED.
7. FOR SECTIONS, SEE SHEET S-12
8. FOR REINFORCING SCHEDULE, SEE SHEET S-19

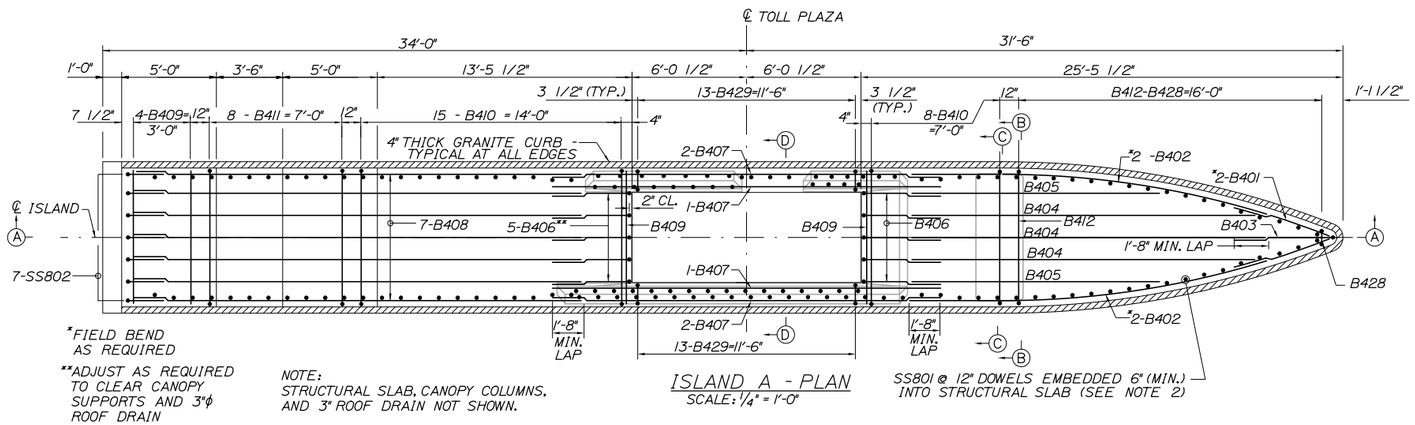

ISLAND A - PLAN
SCALE: 1/4" = 1'-0"

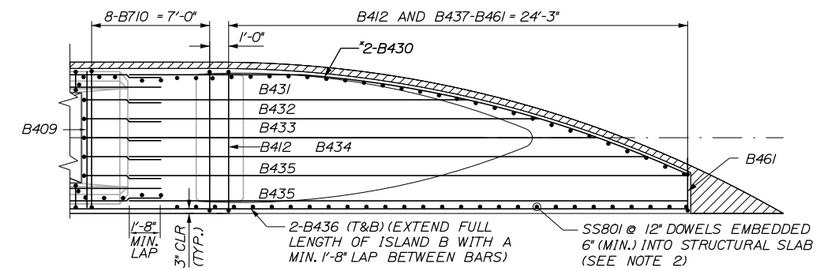

ISLAND B - NOSE PLAN
SCALE: 1/4" = 1'-0"

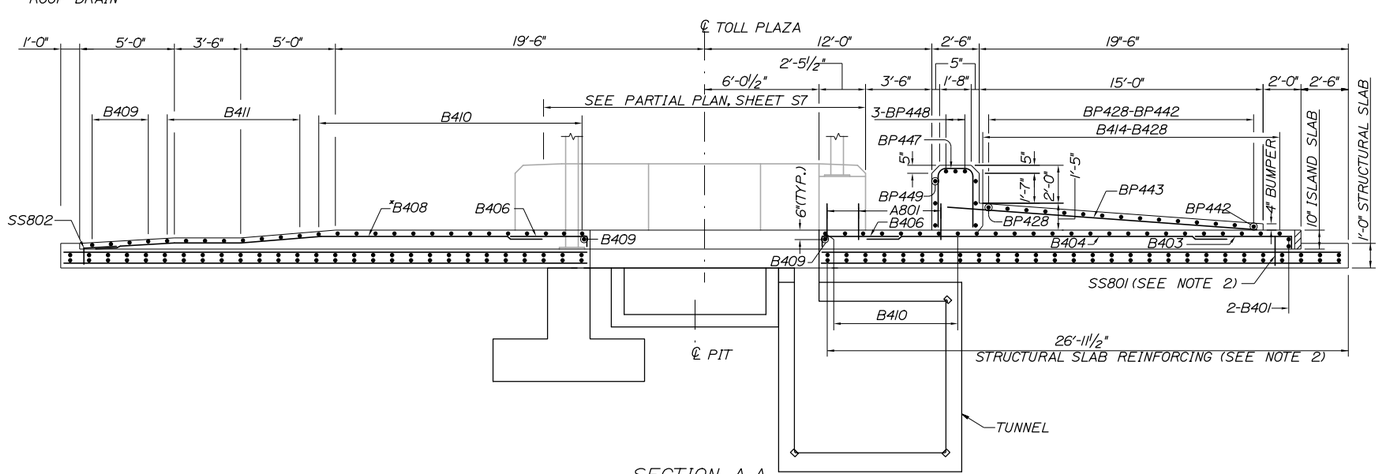

SECTION A-A
SCALE: 1/4" = 1'-0"

Date: 5/15/2015

Filename: 100_Prop Island Details.dgn

Scale:			
No.	Revision	By	Date

Designed by:

HNTB

CONSULTANT PROJECT MANAGER: R. Bruce Munger, P.E.

	By	Date		By	Date
Designed	GLS	05/15	Checked	AJF	05/15
Drawn	PEB	05/15	In Charge of	RAL	05/15

HNTB CORPORATION
340 County Road, Suite 6-C
Westbrook, ME 04092
TEL (207) 774-5155
FAX (207) 228-0909

MAINE TURNPIKE

THE GOLD STAR MEMORIAL HIGHWAY

MTA PROJECT MANAGER: William Yates

FALMOUTH SPUR TOLL PLAZA
ORT CONVERSION

PROPOSED CASH LANES
ISLAND DETAILS

SHEET NUMBER: S-11

CONTRACT: 2015.13

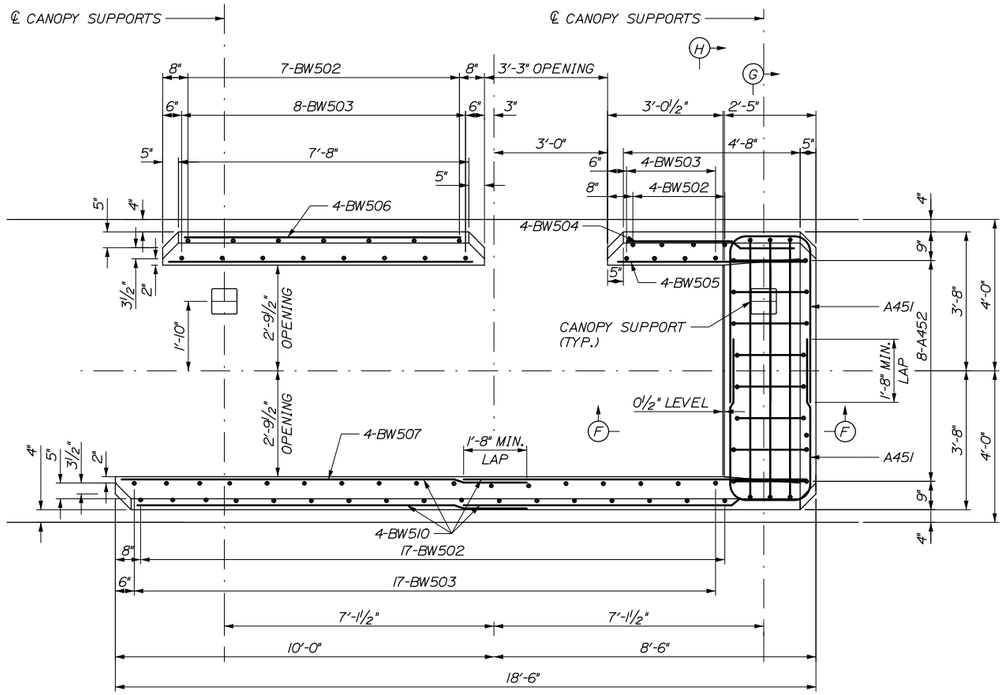

PLAN
1/2"=1'-0"

NOTES

1. FOR BARRIER DETAILS (INCLUDING DOWEL BARS) AT BOOTH ENCLOSURE TYPE B, SEE SHEET S-11.

2. FOR REINFORCING SCHEDULE SEE SHEET S-19.

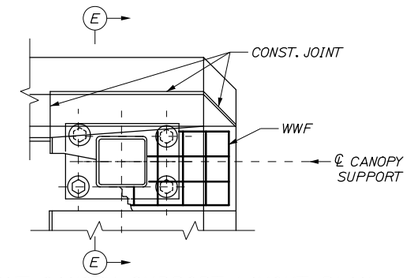

FRONT CANOPY SUPPORT LAYOUT PLAN
1"=1'-0"

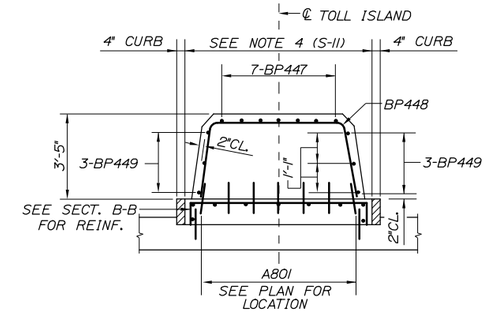

SECTION C-C
1"=3'
(BP443 TO BP446 BARS NOT SHOWN)

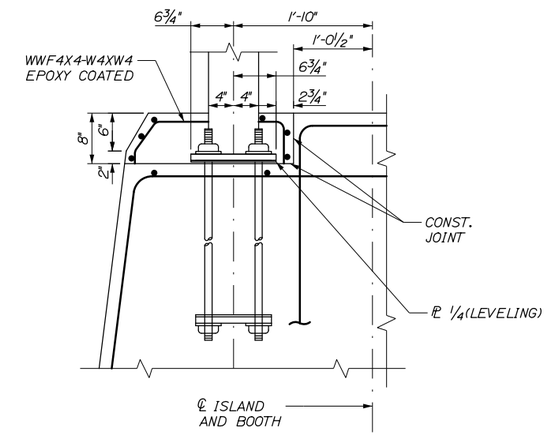

SECTION E-E
1"=1'-0"

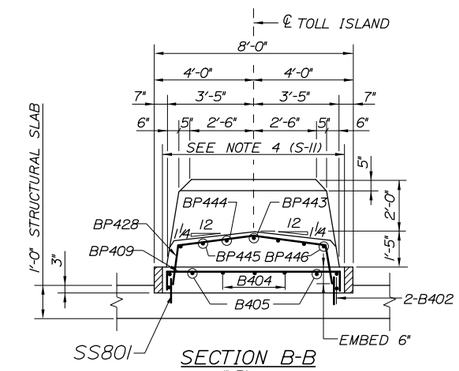

SECTION B-B
1"=3'

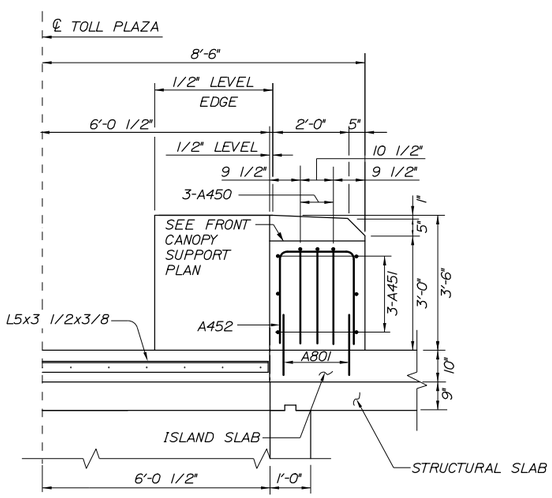

SECTION F-F
1/2"=1'-0"

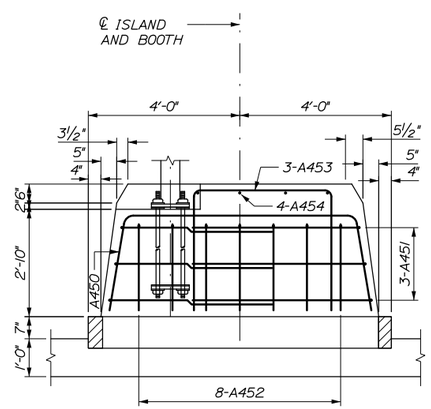

SECTION G-G
1/2"=1'-0"

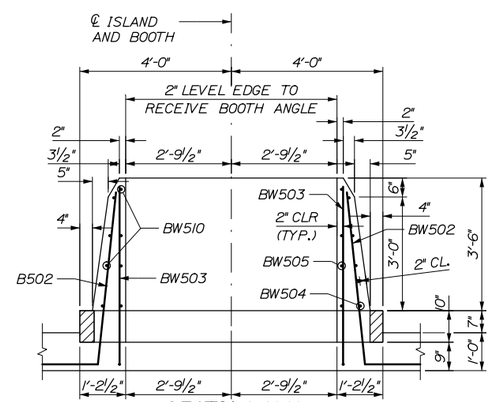

SECTION H-H
1/2"=1'-0"

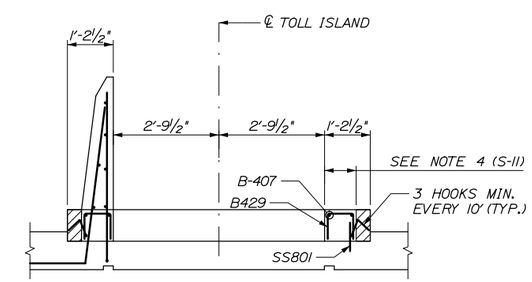

SECTION D-D
1/2"=1'-0"

Date:5/15/2015

Filename: 101_Prop Island Details2.dgn

Scale:			
No.	Revision	By	Date

Designed by:

HNTB

CONSULTANT PROJECT MANAGER: R. Bruce Munger, P.E.

	By	Date		By	Date
Designed	GLS	05/15	Checked	AJS	05/15
Drawn	PEB	05/15	In Charge of	RAL	05/15

HNTB CORPORATION
340 County Road, Suite 6-C
Westbrook, ME 04092
TEL (207) 774-5155
FAX (207) 228-0909

MAINE TURNPIKE

THE GOLD STAR MEMORIAL HIGHWAY

MTA PROJECT MANAGER: William Yates

FALMOUTH SPUR TOLL PLAZA
ORT CONVERSION

PROPOSED CASH LANES
BOOTH ENCLOSURE DETAILS

SHEET NUMBER: S-12

CONTRACT:2015.13

101 OF 153

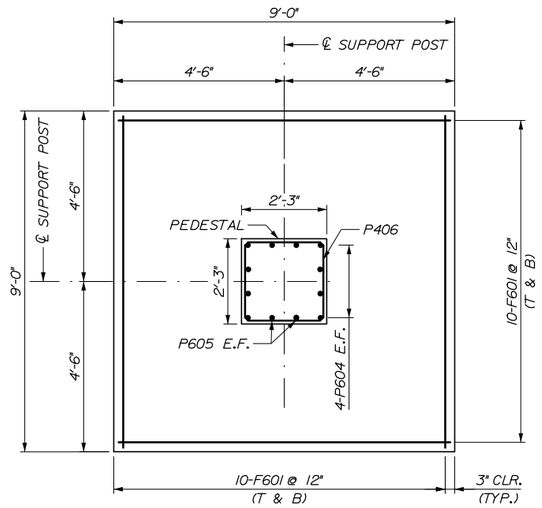

CANOPY COLUMN FOUNDATION
PLAN VIEW
SCALE: 1/2" = 1'-0"

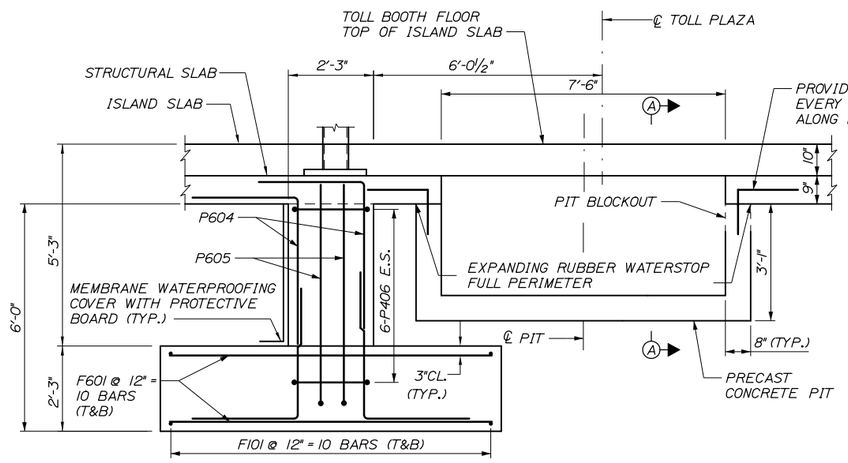

DETAIL 1
SCALE: 1/2" = 1'-0"
(SEE SHEET S-10)

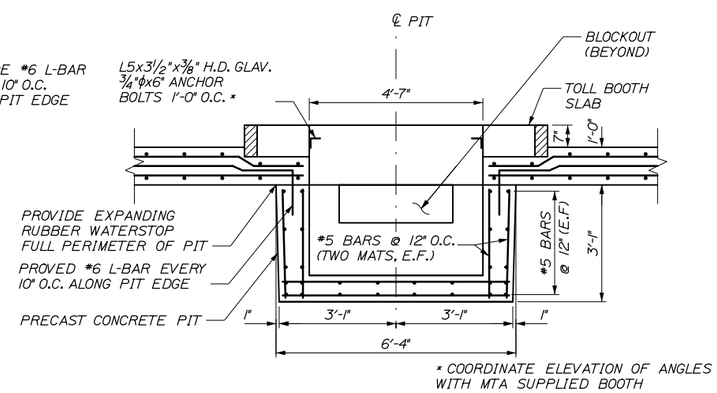

SECTION A-A
SCALE: 1/2" = 1'-0"

NOTES:

1. FOR REINFORCING SCHEDULE, SEE SHEET S-20.
2. FOR ISLAND PROFILE SEE SHEET S-10.

Date:5/15/2015

Filename: 102_Prop Vault.dgn

Scale:			
No.	Revision	By	Date

Designed by:

HNTB

CONSULTANT PROJECT MANAGER: R. Bruce Munger, P.E.

	By	Date		By	Date
Designed	GLS	05/15	Checked	AJF	05/15
Drawn	PEB	05/15	In Charge of	RAL	05/15

HNTB CORPORATION
340 County Road, Suite 6-C
Westbrook, ME 04092
TEL (207) 774-5155
FAX (207) 228-0909

MAINE TURNPIKE

THE GOLD STAR MEMORIAL HIGHWAY

MTA PROJECT MANAGER: William Yates

FALMOUTH SPUR TOLL PLAZA
ORT CONVERSION

PROPOSED CASH LANES
ISLAND PIT DETAILS

SHEET NUMBER: S-13

CONTRACT:2015.13

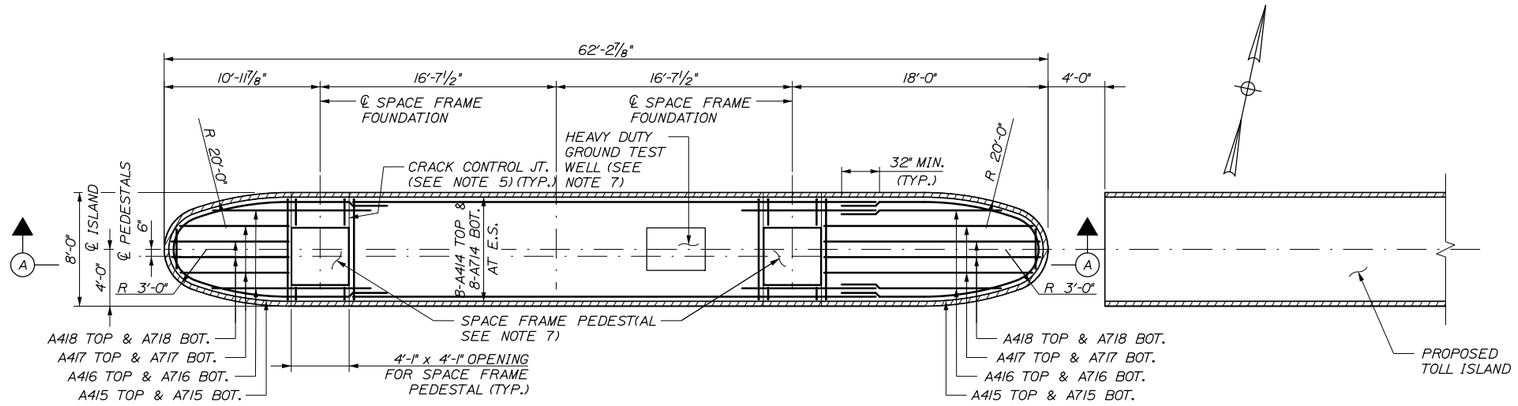

ISLAND A EXTENSION PLAN

3/16" = 1'-0"

NOTE: FOR TRANSVERSE REINFORCING STEEL CALLOUTS SEE SECTION A-A

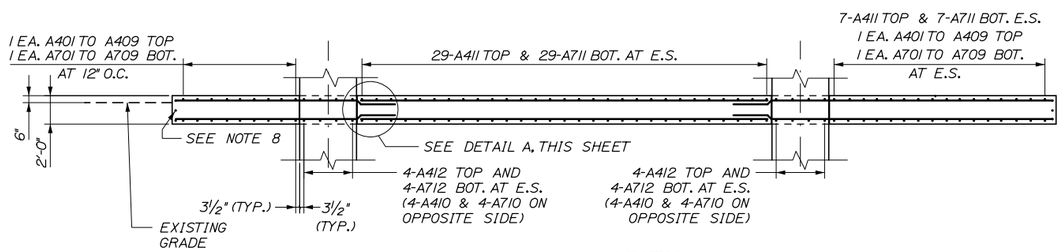

SECTION A-A

3/16" = 1'-0"

NOTES:

1. ALL REINFORCING STEEL SHALL BE EPOXY COATED.
2. PROTECTIVE COATING FOR CONCRETE SURFACES SHALL BE APPLIED TO ALL EXPOSED SURFACES OF CONCRETE CURBS, ISLANDS AND CONCRETE WEARING SURFACES.
3. CONCRETE COVER ON REINFORCING STEEL SHALL BE 2 1/2" MIN. UNLESS NOTED OTHERWISE.
4. CHAMFER ALL EXPOSED CONCRETE EDGES 3/4" UNLESS NOTED OTHERWISE.
5. AFTER CONCRETE HAS BEEN PLACED AND ALLOWED TO REACH INITIAL SET, THE CONTRACTOR SHALL SAWCUT THE TRANSVERSE JOINTS. SAWCUTTING OF THE CONCRETE SHALL BE COMPLETED AS SOON AS PRACTICAL BUT WITHIN 8 HOURS OF THE CONCRETE PLACEMENT. SAWCUTS SHALL BE 2" DEEP AND 1/4" WIDE AND SHALL BE FILLED WITH A SELF-LEVELING ELASTOMERIC SEALANT AFTER THE CONCRETE HAS CURED.
6. IF CONTRACTOR ELECTS TO USE MALE COUPLERS, THEY WILL BE INCIDENTAL TO RELATED CONTRACT ITEMS.
7. THE CONTRACTOR SHALL FIELD CUT REINFORCEMENT AS DIRECTED BY THE RESIDENT TO CLEAR HEAVY DUTY GROUND TEST WELLS AND SPACE FRAME PEDESTALS.
8. TWO ADDITIONAL NO. 4 BARS HAVE BEEN INCLUDED AT MIDHEIGHT OF ISLAND.
9. FOR REINFORCING SCHEDULE, SEE SHEET S-19.

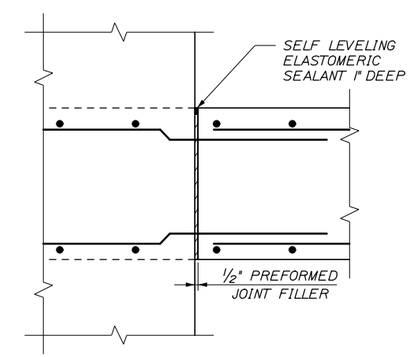

DETAIL A

1" = 1'-0"

Date:5/15/2015

Date:5/15/2015

Filename: 103_IslandExtensionDetails 2.dgn

Scale: AS NOTED			
No.	Revision	By	Date

Designed by: HNTB

CONSULTANT PROJECT MANAGER: R. Bruce Munger, P.E.

	By	Date		By	Date
Designed	GLS	05/15	Checked	AJF	05/15
Drawn	PEB	05/15	In Charge of	RAL	05/15

HNTB CORPORATION
340 County Road, Suite 6-C
Westbrook, ME 04092
TEL (207) 774-5155
FAX (207) 228-0909

MAINE TURNPIKE

THE GOLD STAR MEMORIAL HIGHWAY

MTA PROJECT MANAGER: William Yates

FALMOUTH SPUR TOLL PLAZA
ORT CONVERSION

PROPOSED CASH LANES
ISLAND EXTENSION DETAILS

SHEET NUMBER: S-14

CONTRACT: 2015.13

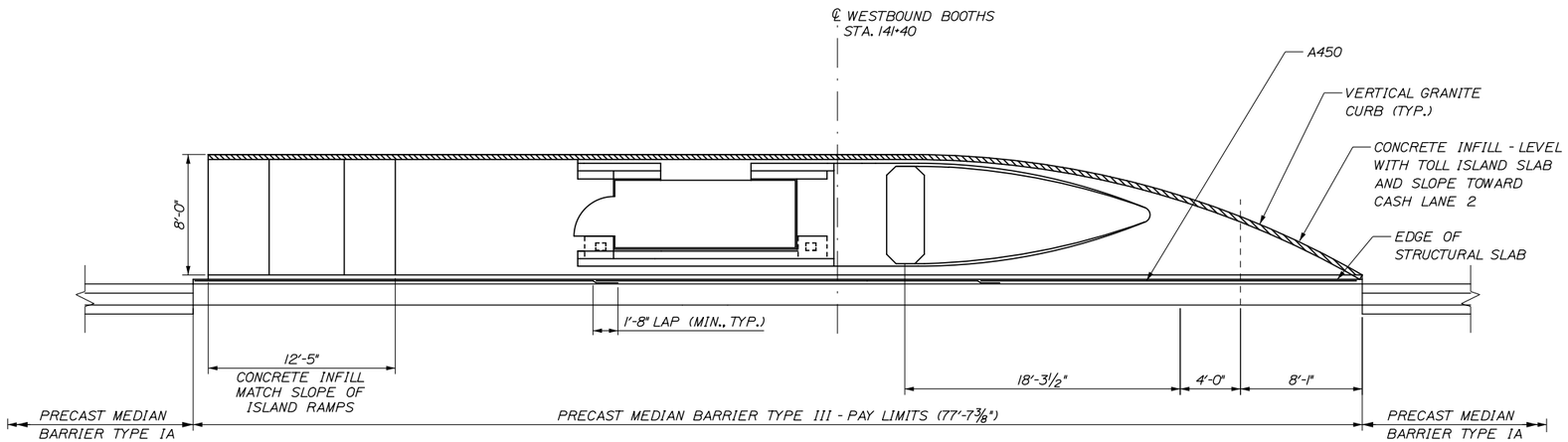

BARRIER DETAIL FOR ISLAND B
PLAN VIEW (PHASE 1)
SCALE: 1" = 5'-0"

NOTES:
1. REFER TO PLAN SHEETS S-09 AND S-17 FOR MORE STRUCTURAL NOTES.
2. ONLY TOP REINFORCING STEEL SHOWN FOR CLARITY
3. REINFORCING STEEL SHALL HAVE A 2 1/2" MINIMUM COVER UNLESS OTHERWISE NOTED.
4. PREFORMED JOINT MATERIAL SHALL CONFORM TO THE CROSS SECTION OF THE PAVEMENT AND BE FURNISHED IN STRIPS EQUAL TO THE PAVEMENT WIDTH.
5. NO HOLE SHALL BE DRILLED CLOSER THAN 3" FROM THE EXISTING EDGE OF CONCRETE.
6. PREMOLDED JOINT FILLER SHALL CONFORM TO ASTM DESIGNATION D1752, TYPE 1 OR ASTM D5249, TYPE 2. PREMOLDED JOINT FILLER SHALL BE A NON STAINING, NON BLEEDING TYPE. PRODUCTS SUCH AS 'CERAMAR', MANUFACTURED BY W. R. MEADOWS, OR AN APPROVED EQUAL WILL BE ACCEPTABLE. CORK IS NOT AN ACCEPTABLE JOINT FILLER MATERIAL.
7. SELF LEVELING ELASTOMERIC SEALANT SHALL BE SIKA FLEX 1A OR AN APPROVED EQUAL.
8. PREMOLDED JOINT FILLER AND SELF LEVELING ELASTOMERIC SEALANT SHALL BE INCIDENTAL TO ITEM 502.262, STRUCTURAL CONCRETE PAVEMENT SLABS.
9. SLOPE CONCRETE INFILL FROM TOP OF PAVEMENT SLAB UP TO TOP OF TOLL ISLAND.
10. SEE SHEET S-16 FOR SECTIONS AND BARRIER DETAILS.

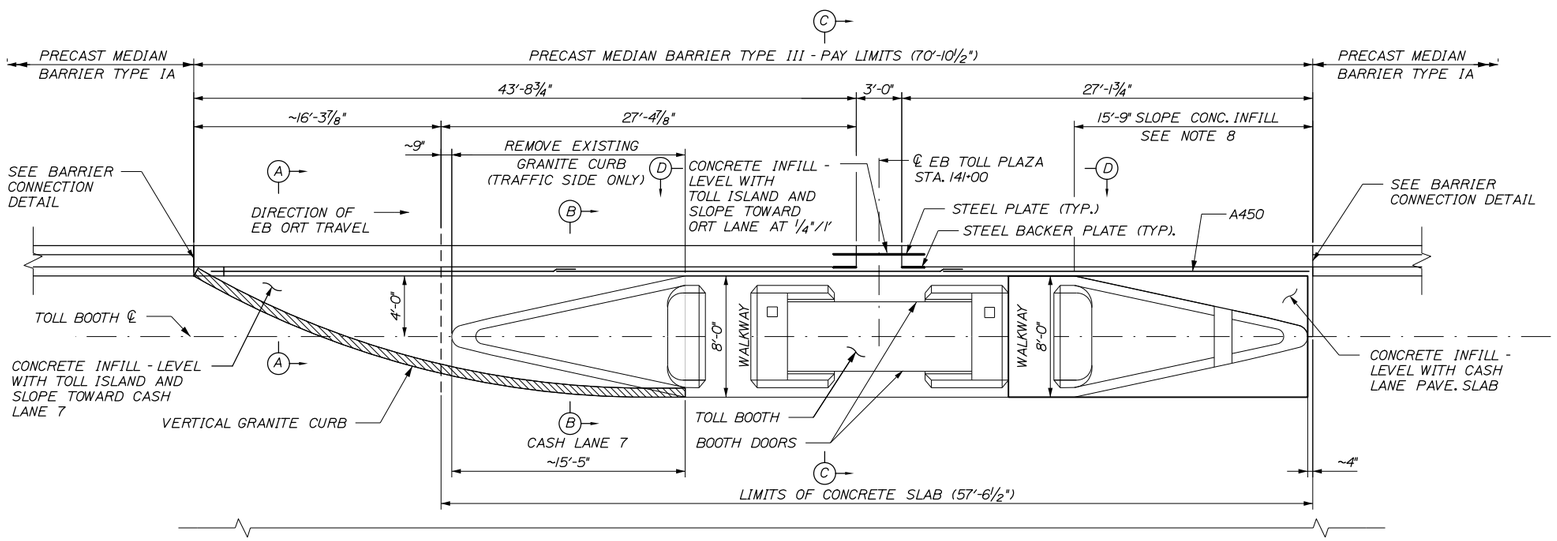

BARRIER DETAIL FOR ISLAND F TOLL BOOTH EGRESS
PLAN VIEW (PHASE 4)
SCALE: 1" = 5'-0"

REINFORCING BAR SCHEDULE									
MARK	SIZE	NO.	LENGTH	TYPE	A	B	C	INCR.	LOCATION AND REMARKS
A450	4	12	31'-0"	STR					
A455	4	350	1'-2"	118	0'-8"	0'-6"			

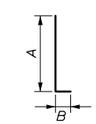

TYPE 118

Date:5/15/2015

Filename: 104_BarrierDet04.dgn

Scale:

No.	Revision	By	Date

Designed by:

HNTB

CONSULTANT PROJECT MANAGER: R. Bruce Munger, P.E.

	By	Date		By	Date
Designed	HME	05/15	Checked	RWH	05/15
Drawn	MPC	05/15	In Charge of	RAL	05/15

HNTB CORPORATION
340 County Road, Suite 6-C
Westbrook, ME 04092
TEL (207) 774-5155
FAX (207) 228-0909

MAINE TURNPIKE

THE GOLD STAR MEMORIAL HIGHWAY

MTA PROJECT MANAGER: William Yates

FALMOUTH SPUR TOLL PLAZA
ORT CONVERSION
PROPOSED CASH LANES
ISLAND BARRIER

SHEET NUMBER: S-15

CONTRACT:2015.13

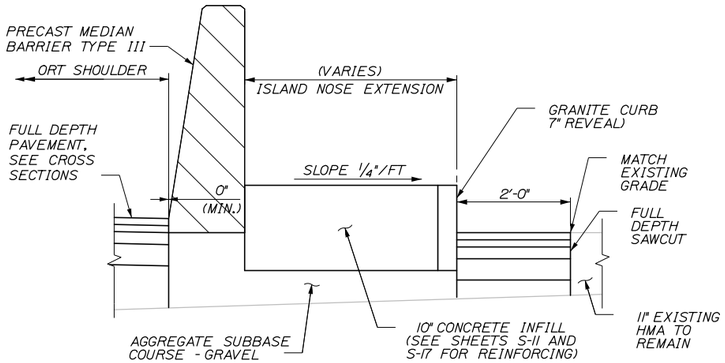

SECTION A-A
NTS

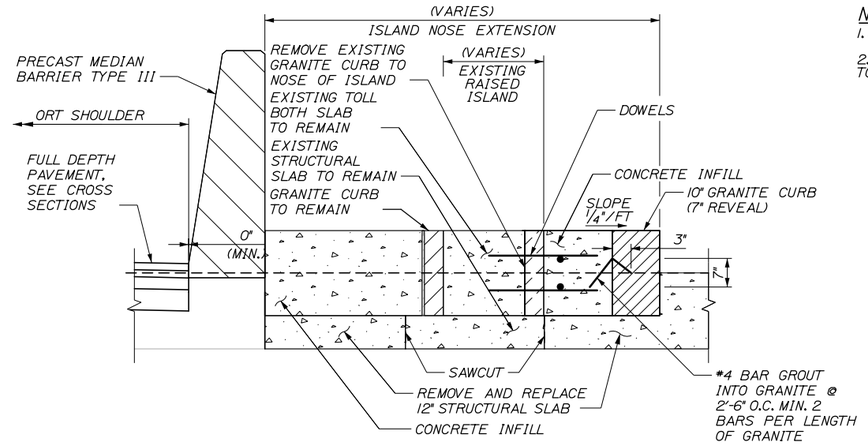

SECTION B-B
NTS

NOTES:
1. FOR CLOSURE POUR REINFORCING, SEE SHEET S-15.
2. REINFORCEMENT ON SHEET S-15 SHALL BE INCIDENTAL TO PRECAST MEDIAN BARRIER.

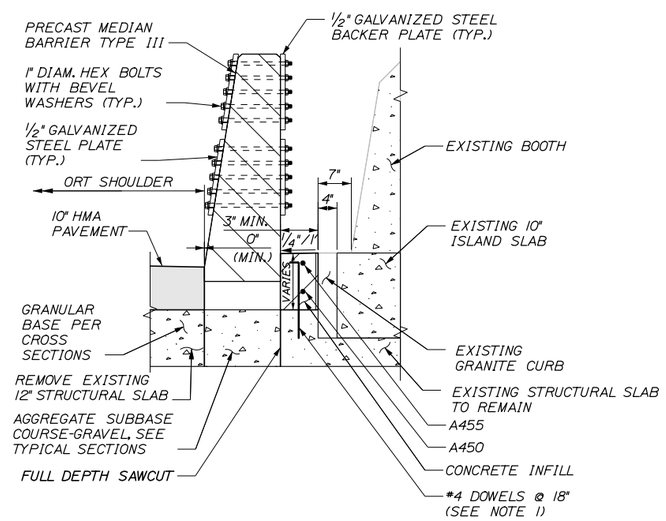

NOTES:
1. DRILL AND ANCHOR #4 DOWELS INTO EXISTING STRUCTURAL SLAB. EMBEDMENT DEPTH SHALL BE 6" MINIMUM.
2. DEPTH OF INFILL CONCRETE VARIES. SEE PLAN.
3. HEX BOLTS SHALL CONFORM TO ASTM A307 OR A325. ALL HARDWARE SHALL BE HOT DIP GALVANIZED.

SECTION C-C
NTS

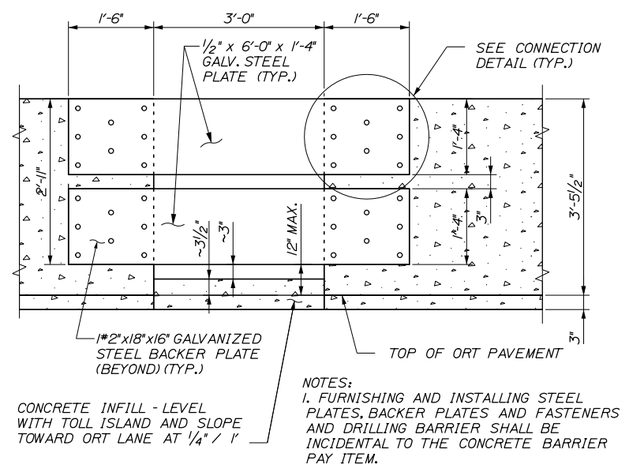

NOTES:
1. FURNISHING AND INSTALLING STEEL PLATES, BACKER PLATES AND FASTENERS AND DRILLING BARRIER SHALL BE INCIDENTAL TO THE CONCRETE BARRIER PAY ITEM.

SECTION D-D
NTS

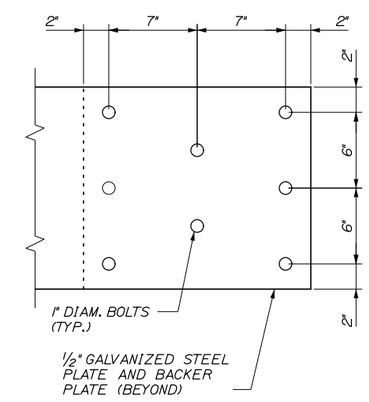

CONNECTION DETAIL
SCALE: 2" = 1'-0"

Date:5/15/2015

Filename: 105_BarrierDet05.dgn

Scale:			
No.	Revision	By	Date

Designed by:

HNTB

CONSULTANT PROJECT MANAGER: R. Bruce Munger, P.E.

	By	Date		By	Date
Designed	HME	05/15	Checked	RWH	05/15
Drawn	MPC	05/15	In Charge of	RAL	05/15

HNTB CORPORATION
340 County Road, Suite 6-C
Westbrook, ME 04092
TEL (207) 774-5155
FAX (207) 228-0909

MAINE TURNPIKE

THE GOLD STAR MEMORIAL HIGHWAY

MTA PROJECT MANAGER: William Yates

FALMOUTH SPUR TOLL PLAZA
ORT CONVERSION

PROPOSED CASH LANES
ISLAND BARRIER DETAILS

SHEET NUMBER: S-16

CONTRACT:2015.13

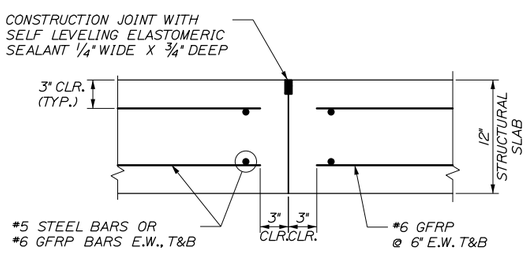

SECTION A-A

1 1/2" = 1'-0"

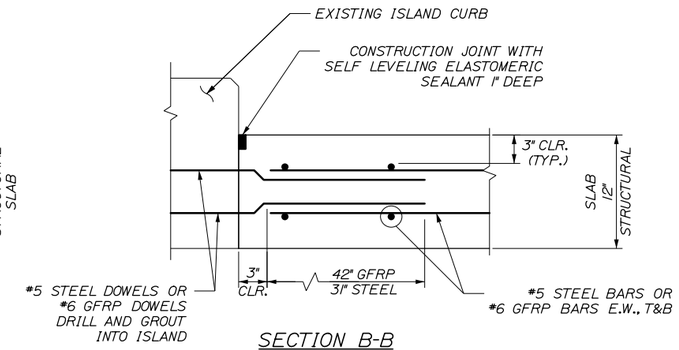

SECTION B-B

1 1/2" = 1'-0"

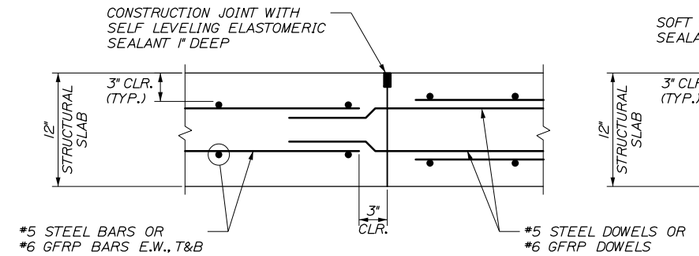

SECTION C-C

1 1/2" = 1'-0"

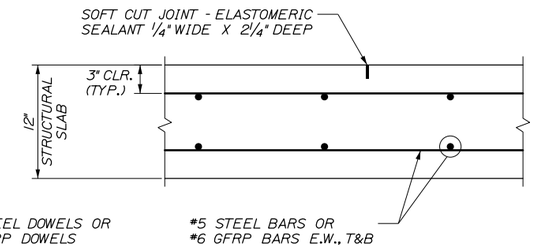

SECTION D-D

1 1/2" = 1'-0"

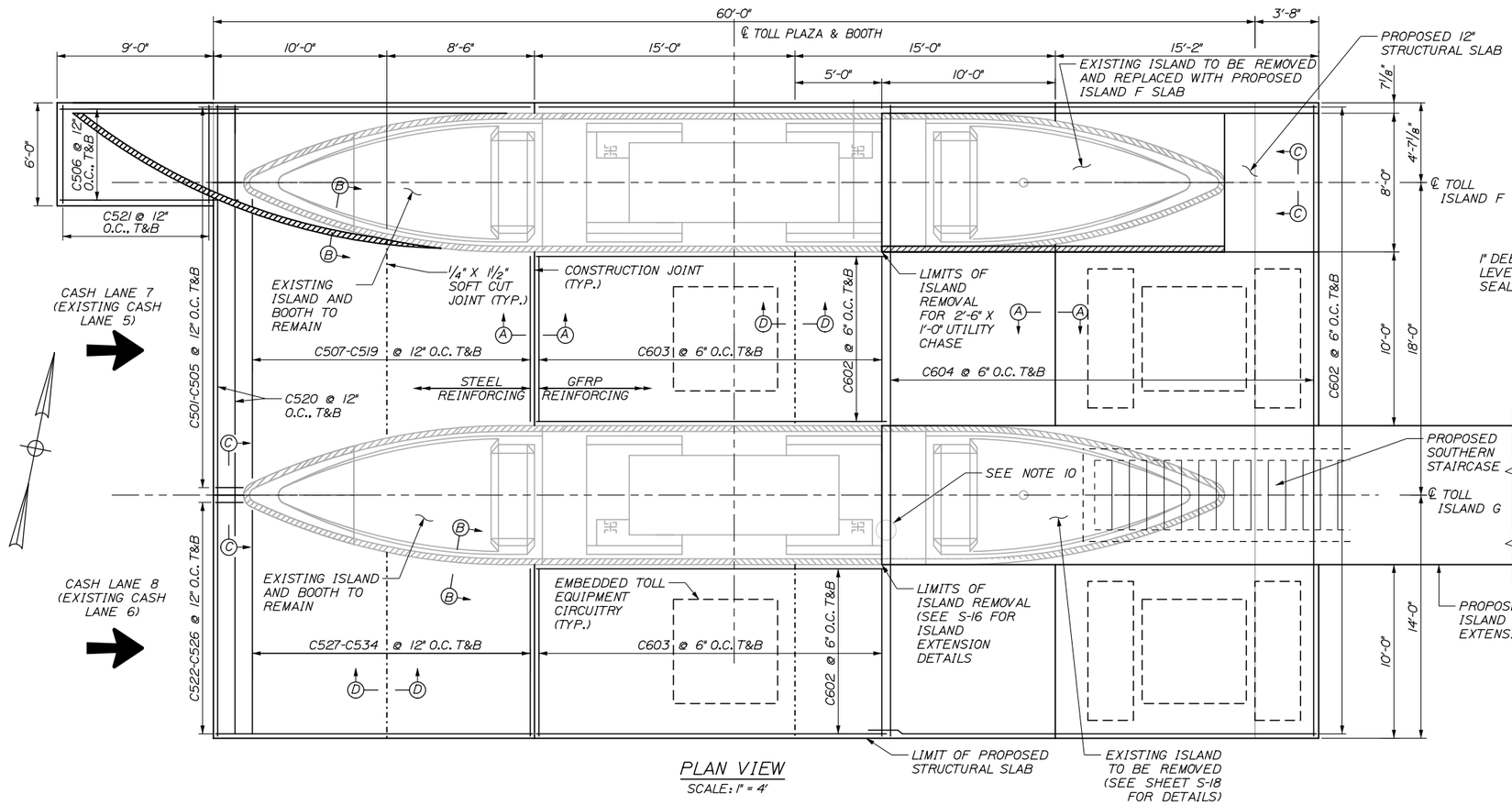

PLAN VIEW

SCALE: 1" = 4'

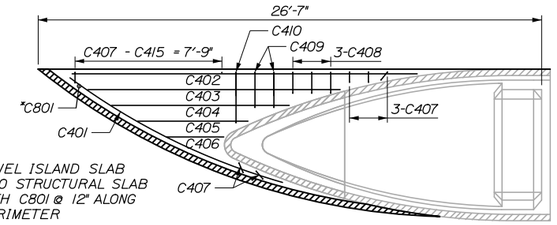

PROPOSED ISLAND F NOSE

SCALE: 1" = 4'

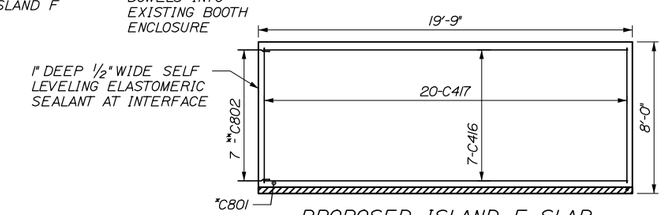

PROPOSED ISLAND F SLAB

SCALE: 1" = 4'

NOTES:

1. PREFORMED JOINT MATERIAL SHALL CONFORM TO THE CROSS SECTION OF THE PAVEMENT AND BE FURNISHED IN STRIPS EQUAL TO THE PAVEMENT WIDTH.
2. CONSTRUCT ALL TRANSVERSE JOINTS PERPENDICULAR TO THE CENTERLINE.
3. NO HOLE SHALL BE DRILLED CLOSER THAN 3" FROM THE EXISTING EDGE OF CONCRETE.
4. SELF LEVELING ELASTOMERIC SEALANT SHALL BE SIKAFLEX IC-SL OR AN APPROVED EQUAL AND SHALL BE INCIDENTAL TO ITEM 502.262. STRUCTURAL CONCRETE PAVEMENT SLABS.
5. AFTER CONCRETE HAS BEEN PLACED AND ALLOWED TO REACH INITIAL SET, THE CONTRACTOR SHALL SAWCUT THE TRANSVERSE JOINTS. SAWCUTTING OF THE CONCRETE SHALL BE COMPLETED AS SOON AS PRACTICAL, BUT WITHIN 8 HOURS OF THE CONCRETE PLACEMENT. SAWCUTS SHALL BE 1/4" WIDE X 2 1/4" DEEP AND SHALL BE FILLED WITH A SELF-LEVELING ELASTOMERIC SEALANT AFTER THE CONCRETE HAS CURED.
6. SEE SHEET S-15 AND S-16 FOR MODIFIED CURB AND INFILL DETAILS.
7. REBAR SPACING SHALL BE 12" O.C. UNLESS SPECIFIED OTHERWISE.
8. ISLAND F LONGITUDINAL REBAR SHALL BE PLACED WITH A 2" CLR FROM TOP OF THE ISLAND SLAB. ELEVATION OF ISLAND INFILL SHALL MATCH EXISTING.
9. FOR REINFORCING SCHEDULE, SEE SHEET S-19 AND S-20.
10. EXISTING CANOPY DRAIN. SUPPLY SLEEVE 7"ϕ THROUGH NEW ISLAND SLAB. CUT/BEND REBAR AROUND DRAIN SLEEVE.

Scale:

No.	Revision	By	Date

Designed by:

HNTB

CONSULTANT PROJECT MANAGER: R. Bruce Munger, P.E.

	By	Date		By	Date
Designed	GLS	05/15	Checked	AJF	05/15
Drawn	PEB	05/15	In Charge of	RAL	05/15

HNTB CORPORATION
340 County Road, Suite 6-C
Westbrook, ME 04092
TEL (207) 774-5155
FAX (207) 228-0909

MAINE TURNPIKE

THE GOLD STAR MEMORIAL HIGHWAY

MTA PROJECT MANAGER: William Yates

FALMOUTH SPUR TOLL PLAZA
ORT CONVERSION

CASH LANE REHAB
STRUCTURAL SLAB DETAILS

SHEET NUMBER: S-17

CONTRACT: 2015.13

Date: 5/15/2015

Filename: 106_CashLaneRehab-PavementSlabDetails.dgn

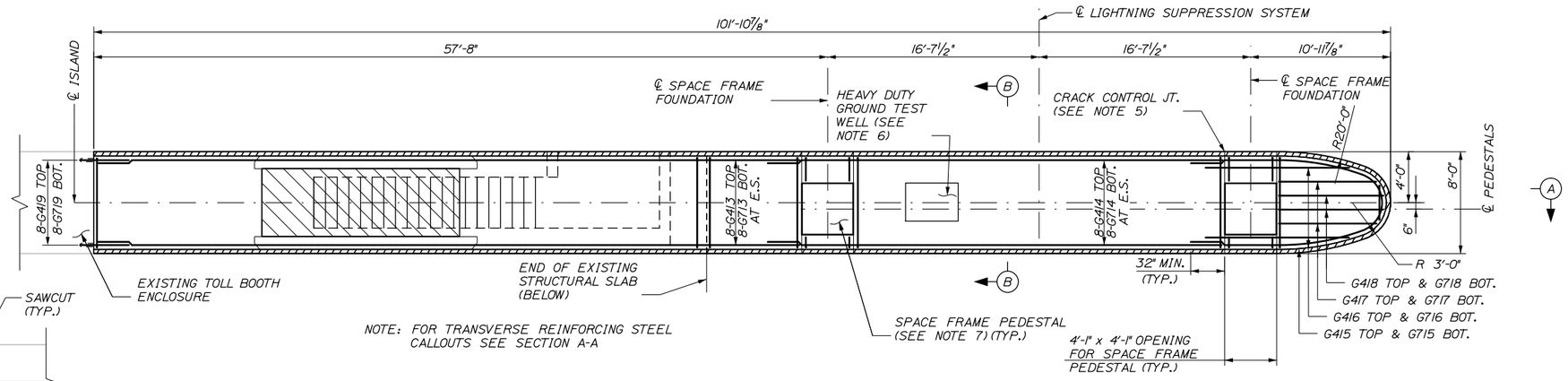

ISLAND G EXTENSION PLAN

3/16" = 1'-0"

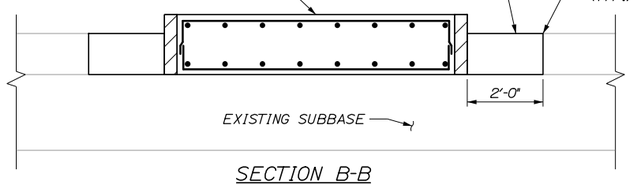

SECTION B-B

1/2" = 1'-0"

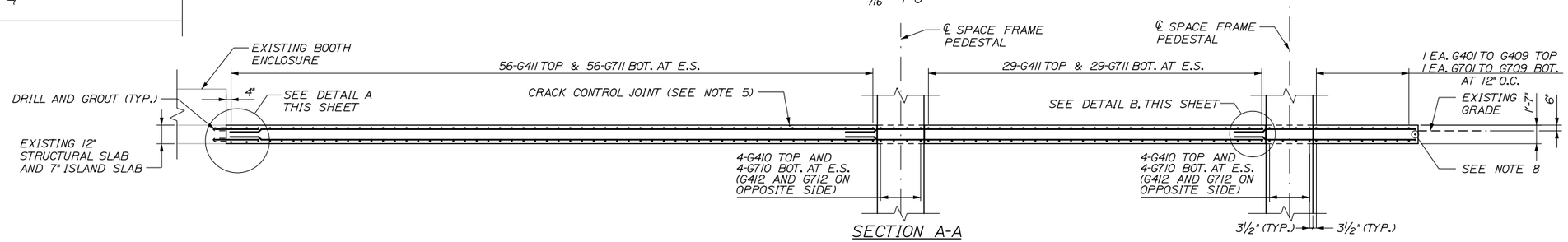

SECTION A-A

3/16" = 1'-0"

NOTES:

1. ALL REINFORCING STEEL SHALL BE EPOXY COATED.
2. PROTECTIVE COATING FOR CONCRETE SURFACES SHALL BE APPLIED TO ALL EXPOSED SURFACES OF CONCRETE CURBS, ISLANDS AND CONCRETE WEARING SURFACES.
3. CONCRETE COVER ON REINFORCING STEEL SHALL BE 2 1/2" MIN. UNLESS NOTED OTHERWISE.
4. CHAMFER ALL EXPOSED CONCRETE EDGES 3/4" UNLESS NOTED OTHERWISE.
5. AFTER CONCRETE HAS BEEN PLACED AND ALLOWED TO REACH INITIAL SET, THE CONTRACTOR SHALL SAWCUT THE TRANSVERSE JOINTS. SAWCUTTING OF THE CONCRETE SHALL BE COMPLETED AS SOON AS PRACTICAL BUT WITHIN 8 HOURS OF THE CONCRETE PLACEMENT. SAWCUTS SHALL BE 1" DEEP AND 1/2" WIDE AND SHALL BE FILLED WITH A SELF-LEVELING ELASTOMERIC SEALANT AFTER THE CONCRETE HAS CURED.
6. THE CONTRACTOR SHALL FIELD CUT REINFORCEMENT AS DIRECTED BY THE RESIDENT TO CLEAR HEAVY DUTY GROUND TEST WELLS, SPACE FRAME PEDESTALS, AND SOUTHERN BOOTH ENCLOSURE.
7. TWO ADDITIONAL NO. 4 BARS HAVE BEEN INCLUDED AT MIDHEIGHT OF ISLAND.
8. ISLAND EXTENSION SHALL MATCH EXISTING ISLAND GRADE.
9. FOR REINFORCING SCHEDULE, SEE SHEET S-19.

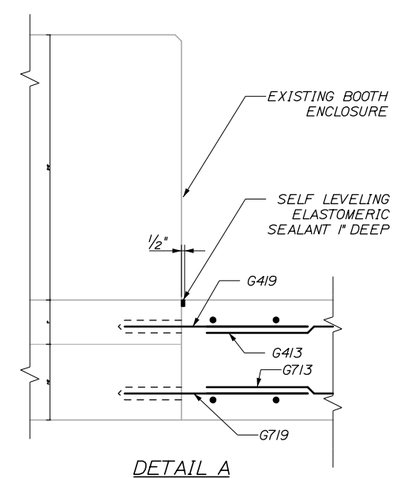

DETAIL A

1" = 1'-0"

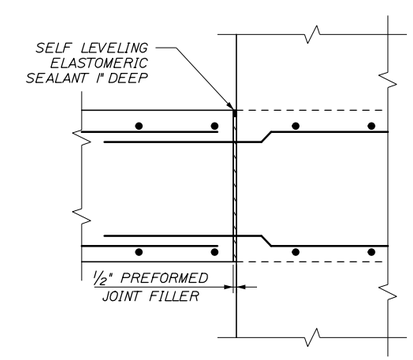

DETAIL B

1" = 1'-0"

Date:5/15/2015

Date:5/15/2015

Filename: 107_IslandExtensionDetails.dgn

Scale: AS NOTED				Designed by: HNTB						HNTB CORPORATION 340 County Road, Suite 6-C Westbrook, ME 04092 TEL (207) 774-5155 FAX (207) 228-0909	MAINE TURNPIKE THE GOLD STAR MEMORIAL HIGHWAY	FALMOUTH SPUR TOLL PLAZA ORT CONVERSION CASH LANE REHAB ISLAND EXTENSION DETAILS
No.	Revision	By	Date	CONSULTANT PROJECT MANAGER: R. Bruce Munger, P.E.							MTA PROJECT MANAGER: William Yates	SHEET NUMBER: S-18
					By	Date		By	Date			
				Designed	GLS	05/15	Checked	AJF	05/15			
				Drawn	PEB	05/15	In Charge of	RAL	05/15			CONTRACT:2015.13 107 OF 153

MARK	SIZE	NO. PER BOOTH	LENGTH	TYPE	A	B	C	D	LOCATION AND REMARKS
ISLAND SLAB A									
B401	4	2	10'-9"	13A	5'-0"	3'-7"	5'-0"		BEGINNING OF ISLAND, LONG.
B402	4	4	19'-0"	STR					BEGINNING OF ISLAND, LONG.
B403	4	1	6'-4"	17		0'-7"	5'-9"	0'-0"	BEGINNING OF ISLAND, LONG.
B404	4	3	18'-5"	STR					LONGITUDINAL
B405	4	2	14'-3"	STR					LONGITUDINAL
B406	4	10	4'-7"	17		0'-7"	4'-0"	0'-0"	LONGITUDINAL
B407	4	6	20'-6"	STR					LONGITUDINAL
B408	4	7	24'-6"	STR					LONGITUDINAL
B409	4	6	7'-0"	STR					TRANSVERSE
B410	4	23	8'-4"	17		0'-8"	7'-0"	0'-8"	TRANSVERSE
B411	4	8	7'-8"	17		0'-4"	7'-0"	0'-4"	TRANSVERSE
B412	4	1	8'-4"	17		0'-8"	7'-0"	0'-8"	TRANSVERSE
B413	4	1	8'-3"	17		0'-8"	6'-11"	0'-8"	TRANSVERSE
B414	4	1	8'-2"	17		0'-8"	6'-10"	0'-8"	TRANSVERSE
B415	4	1	8'-0"	17		0'-8"	6'-8"	0'-8"	TRANSVERSE
B416	4	1	7'-10"	17		0'-8"	6'-6"	0'-8"	TRANSVERSE
B417	4	1	7'-7"	17		0'-8"	6'-3"	0'-8"	TRANSVERSE
B418	4	1	7'-4"	17		0'-8"	6'-0"	0'-8"	TRANSVERSE
B419	4	1	7'-0"	17		0'-8"	5'-8"	0'-8"	TRANSVERSE
B420	4	1	6'-8"	17		0'-8"	5'-4"	0'-8"	TRANSVERSE
B421	4	1	6'-3"	17		0'-8"	4'-11"	0'-8"	TRANSVERSE
B422	4	1	5'-10"	17		0'-8"	4'-6"	0'-8"	TRANSVERSE
B423	4	1	5'-4"	17		0'-8"	4'-0"	0'-8"	TRANSVERSE
B424	4	1	4'-10"	17		0'-8"	3'-6"	0'-8"	TRANSVERSE
B425	4	1	4'-3"	17		0'-8"	2'-11"	0'-8"	TRANSVERSE
B426	4	1	3'-7"	17		0'-8"	2'-3"	0'-8"	TRANSVERSE
B427	4	1	2'-11"	17		0'-8"	1'-7"	0'-8"	TRANSVERSE
B428	4	1	2'-2"	17		0'-8"	0'-10"	0'-8"	TRANSVERSE
B429	4	26	2'-3"	17		0'-8"	0'-11"	0'-8"	TRANSVERSE
SS801	8	184	1'-3"	STR					DOWELS
SS802	8	7	2'-2"	17		0'-6"	1'-8"	0'-0"	DOWELS

MARK	SIZE	NO. PER BOOTH	LENGTH	TYPE	A	B	C	D	LOCATION AND REMARKS
ISLAND SLAB B									
B406	4	10	4'-7"	17		0'-7"	4'-0"	0'-0"	LONGITUDINAL
B407	4	6	20'-6"	STR					LONGITUDINAL
B408	4	7	24'-6"	STR					LONGITUDINAL
B409	4	6	7'-4"	STR					TRANSVERSE
B410	4	23	8'-8"	17		0'-8"	7'-4"	0'-8"	TRANSVERSE
B411	4	8	8'-0"	17		0'-4"	7'-4"	0'-4"	TRANSVERSE
B412	4	1	8'-8"	17		0'-8"	7'-4"	0'-8"	TRANSVERSE
B429a	4	13	2'-3"	17		0'-8"	0'-11"	0'-8"	TRANSVERSE (CURB SIDE)
B429b	4	13	2'-7"	17		0'-8"	1'-3"	0'-8"	TRANSVERSE (BARRIER SIDE)
B430	4	2	31'-0"	STR					ISLAND B NOSE
B431	4	1	17'-11"	STR					ISLAND B NOSE
B432	4	1	21'-9"	STR					ISLAND B NOSE
B433	4	1	24'-9"	STR					ISLAND B NOSE
B434	4	1	27'-4"	STR					ISLAND B NOSE
B435	4	2	29'-6"	STR					ISLAND B NOSE
B436	4	4	38'-4"	STR					LONGITUDINAL (BARRIER SIDE)
B437	4	1	8'-8"	17		0'-8"	7'-4"	0'-8"	TRANSVERSE
B438	4	1	8'-7"	17		0'-8"	7'-3"	0'-8"	TRANSVERSE
B439	4	1	8'-7"	17		0'-8"	7'-3"	0'-8"	TRANSVERSE
B440	4	1	8'-6"	17		0'-8"	7'-2"	0'-8"	TRANSVERSE
B441	4	1	8'-5"	17		0'-8"	7'-1"	0'-8"	TRANSVERSE
B442	4	1	8'-4"	17		0'-8"	7'-0"	0'-8"	TRANSVERSE
B443	4	1	8'-3"	17		0'-8"	6'-11"	0'-8"	TRANSVERSE
B444	4	1	8'-2"	17		0'-8"	6'-10"	0'-8"	TRANSVERSE
B445	4	1	8'-0"	17		0'-8"	6'-8"	0'-8"	TRANSVERSE
B446	4	1	7'-10"	17		0'-8"	6'-6"	0'-8"	TRANSVERSE
B447	4	1	7'-8"	17		0'-8"	6'-4"	0'-8"	TRANSVERSE
B448	4	1	7'-6"	17		0'-8"	6'-2"	0'-8"	TRANSVERSE
B449	4	1	7'-3"	17		0'-8"	5'-11"	0'-8"	TRANSVERSE
B450	4	1	7'-0"	17		0'-8"	5'-8"	0'-8"	TRANSVERSE
B451	4	1	6'-9"	17		0'-8"	5'-5"	0'-8"	TRANSVERSE
B452	4	1	6'-6"	17		0'-8"	5'-2"	0'-8"	TRANSVERSE
B453	4	1	6'-3"	17		0'-8"	4'-11"	0'-8"	TRANSVERSE
B454	4	1	5'-11"	17		0'-8"	4'-7"	0'-8"	TRANSVERSE
B455	4	1	5'-7"	17		0'-8"	4'-3"	0'-8"	TRANSVERSE
B456	4	1	5'-3"	17		0'-8"	3'-11"	0'-8"	TRANSVERSE
B457	4	1	4'-11"	17		0'-8"	3'-7"	0'-8"	TRANSVERSE
B458	4	1	4'-6"	17		0'-8"	3'-2"	0'-8"	TRANSVERSE
B459	4	1	4'-1"	17		0'-8"	2'-9"	0'-8"	TRANSVERSE
B460	4	1	3'-8"	17		0'-8"	2'-4"	0'-8"	TRANSVERSE
B461	4	1	3'-3"	17		0'-8"	1'-11"	0'-8"	TRANSVERSE
SS801	8	220	1'-3"	STR					DOWELS
SS802	8	7	2'-2"	17		0'-6"	1'-8"	0'-0"	DOWELS

MARK	SIZE	NO. PER BOOTH	LENGTH	TYPE	A	B	C	D	LOCATION AND REMARKS
ISLAND A BUMPER									
BP428	4	1	9'-1"	17D	3 3/4"	1'-5"	2 3/4"	3'-1"	TRANS. REINF. AT END OF BUMPER
BP429	4	1	8'-11"	17D	3 3/4"	1'-4"	2 3/4"	3'-1"	TRANS. REINF. AT END OF BUMPER
BP430	4	1	8'-7"	17D	3 3/4"	1'-3"	2 3/4"	3'-0"	TRANS. REINF. AT END OF BUMPER
BP431	4	1	8'-3"	17D	3 3/4"	1'-2"	2 3/4"	2'-11"	TRANS. REINF. AT END OF BUMPER
BP432	4	1	8'-1"	17D	3 1/2"	1'-2"	2 1/2"	2'-10"	TRANS. REINF. AT END OF BUMPER
BP433	4	1	7'-9"	17D	3 1/2"	1'-1"	2 1/2"	2'-9"	TRANS. REINF. AT END OF BUMPER
BP434	4	1	7'-3"	17D	3 1/4"	1'-0"	2 1/4"	2'-7"	TRANS. REINF. AT END OF BUMPER
BP435	4	1	6'-11"	17D	3"	1'-0"	2"	2'-5"	TRANS. REINF. AT END OF BUMPER
BP436	4	1	6'-3"	17D	2 3/4"	11"	2"	2'-2"	TRANS. REINF. AT END OF BUMPER
BP437	4	1	5'-9"	17D	2 1/2"	11"	1 3/4"	1'-11"	TRANS. REINF. AT END OF BUMPER
BP438	4	1	5'-0"	17D	2"	10"	1 1/2"	1'-8"	TRANS. REINF. AT END OF BUMPER
BP439	4	1	4'-4"	17D	1 3/4"	9"	1 1/4"	1'-5"	TRANS. REINF. AT END OF BUMPER
BP440	4	1	3'-8"	17D	1 1/4"	9"	1"	1'-1"	TRANS. REINF. AT END OF BUMPER
BP441	4	1	3'-0"	17D	1"	9"	1/2"	9"	TRANS. REINF. AT END OF BUMPER
BP442	4	1	2'-1"	17D	-	8"	-	4 1/2"	TRANS. REINF. AT END OF BUMPER
BP443	4	1	16'-7"	STR					END OF BUMPER AT CENTER
BP444	4	2	14'-3"	STR					END OF BUMPER
BP445	4	2	10'-5"	STR					END OF BUMPER
BP446	4	2	16'-10"	STR					END OF BUMPER
BP447	4	7	7'-9"	17A		3'-1"	2'-1"	3'-1"	R=6" (INSIDE RADIUS)
BP448	4	3	11'-1"	17B	3'-0"	4'-6"	3'-0"	6'-4"	R=5 1/2" (INSIDE RADIUS)
BP449	4	6	9'-10"	17A		4'-2"	2'-2"	4'-2"	R=7" (INSIDE RADIUS)

NOTE: ISLAND B BUMPER IDENTICAL TO ABOVE

MARK	SIZE	NO. PER BOOTH	LENGTH	TYPE	A	B	C	D	LOCATION AND REMARKS
BOOTH A ENCLOSURE									
A450	4	3	11'-1 1/4"	17C	2'- 6"	5"	6'-1 1/4"		
A451	4	6	11'-5 1/2"	17A		4'-8"	2'-1 1/2"	4'- 8"	R=7" (INSIDE RADIUS)
A452	4	8	6'-11 1/2"	17		2'-5 1/2"	2'-0 1/2"	2'-5 1/2"	
A453	4	3	9'-4"	17		3'-0"	3'-4"	3'-0"	
A454	4	4	1'-11"	STR					
BW502	5	29	5'-11"	17C	4'-4"	6"	1'-6"		EMBED IN STRUCTURAL SLAB
BW503	5	30	6'-0"	17		4'-6"	1'-6"		EMBED IN STRUCTURAL SLAB
BW504	5	4	4'-3"	STR					
BW505	5	4	5'-0"	STR					
BW506	5	4	8'-8"	STR					
BW507	5	4	10'-0"	STR					
BW510	5	16	9'-3"	STR					
A801	8	27	1'-3"	STR					

NOTE: ISLAND B BOTH ENDS IDENTICAL TO ABOVE

MARK	SIZE	NO.	LENGTH	TYPE	A	B	C	LOCATION AND REMARKS
ISLAND A EXTENSION								
A401	4	2	5'-9"	17	2'-9"	1'-6"	1'-6"	
A402	4	2	7'-2"	17	4'-2"	1'-6"	1'-6"	
A403	4	2	7'-11"	17	4'-11"	1'-6"	1'-6"	
A404	4	2	8'-6"	17	5'-6"	1'-6"	1'-6"	
A405	4	2	8'-11"	17	5'-11"	1'-6"	1'-6"	
A406	4	2	9'-4"	17	6'-4"	1'-6"	1'-6"	
A407	4	2	9'-6"	17	6'-6"	1'-6"	1'-6"	
A408	4	2	9'-8"	17	6'-8"	1'-6"	1'-6"	
A409	4	2	9'-9"	17	6'-9"	1'-6"	1'-6"	
A410	4	8	2'-6"	17	1'-0	1'-6"	0"	
A411	4	36	9'-10"	17	6'-10"	1'-6"	1'-6"	
A412	4	8	3'-6"	17	2'-0"	1'-6"	0"	
A414	4	10	36'-6"	STR				
A415	4	4	35'-0"	STR				FIELD BEND BARS
A416	4	4	14'-0"	STR				
A417	4	4	15'-6"	STR				
A418	4	4	16'-0"	STR				
A701	7	2	4'-9"	17	2'-9"	1'-0"	1'-0"	
A702	7	2	6'-2"	17	4'-2"	1'-0"	1'-0"	
A703	7	2	6'-11	17	4'-11"	1'-0"	1'-0"	
A704	7	2	7'-6"	17	5'-6"	1'-0	1'-0"	
A705	7	2	7'-11"	17	5'-11"	1'-0"	1'-0"	
A706	7	2	8'-4"	17	6'-4"	1'-0"	1'-0"	
A707	7	2	8'-6"	17	6'-6"	1'-0"	1'-0"	
A708	7	2	8'-8"	17	6'-8"	1'-0"	1'-0"	
A709	7	2	8'-9"	17	6'-9"	1'-0"	1-0"	
A710	7	8	2'-0"	17	1'-0	1'-0"	0"	
A711	7	36	8'-10	17	6'-10"	1'-0"	1'-0"	
A712	7	8	3'-0"	17	2'-0"	1'-0"	0"	
A714	7	8	36'-6"	STR				
A715	7	2	35'-0"	STR				FIELD BEND BARS
A716	7	4	14'-0"	STR				
A717	7	4	15'-6"	STR				
A718	7	4	16'-0"	STR				

ISLAND G EXTENSION								
G401	4	1	5'-9"	17	2'-9"	1'-6"	1'-6"	
G402	4	1	7'-2"	17	4'-2"	1'-6"	1'-6"	
G403	4	1	7'-11"	17	4'-11"	1'-6"	1'-6"	
G404	4	1	8'-6"	17	5'-6"	1'-6"	1'-6"	
G405	4	1	8'-11"	17	5'-11"	1'-6"	1'-6"	
G406	4	1	9'-4"	17	6'-4"	1'-6"	1'-6"	
G407	4	1	9'-6"	17	6'-6"	1'-6"	1'-6"	
G408	4	1	9'-8"	17	6'-8"	1'-6"	1'-6"	
G409	4	1	9'-9"	17	6'-9"	1'-6"	1'-6"	
G410	4	8	2'-6"	17	1'-0	1'-6"	0"	
G411	4	85	9'-10"	17	6'-10"	1'-6"	1'-6"	
G412	4	8	3'-6"	17	2'-0"	1'-6"	0"	
G413	4	10	55'-6"	STR				
G414	4	10	36'-6"	STR				
G415	4	2	35'-0"	STR				FIELD BEND BARS
G416	4	2	14'-0"	STR				
G417	4	2	15'-6"	STR				
G418	4	2	16'-0"	STR				
G419	4	8	5'-2"	STR				DOWELS
G701	7	1	4'-9"	17	2'-9"	1'-0"	1'-0"	
G702	7	1	6'-2"	17	4'-2"	1'-0"	1'-0"	
G703	7	1	6'-11	17	4'-11"	1'-0"	1'-0"	
G704	7	1	7'-6"	17	5'-6"	1'-0	1'-0"	
G705	7	1	7'-11"	17	5'-11"	1'-0"	1'-0"	
G706	7	1	8'-4"	17	6'-4"	1'-0"	1'-0"	
G707	7	1	8'-6"	17	6'-6"	1'-0"	1'-0"	
G708	7	1	8'-8"	17	6'-8"	1'-0"	1'-0"	
G709	7	1	8'-9"	17	6'-9"	1'-0"	1-0"	
G710	7	8	2'-0"	17	1'-0"	1'-0"	0"	
G711	7	85	8'-10"	17	6'-10"	1'-0"	1'-0"	
G712	7	8	3'-0"	17	2'-0"	1'-0"	0"	
G713	7	8	55'-6"	STR				
G714	7	8	36'-6"	STR				
G715	7	1	35'-0"	STR				FIELD BEND BARS
G716	7	2	14'-0"	STR				
G717	7	2	15'-6"	STR				
G718	7	2	16'-0"	STR				
G719	7	8	5'-2"	STR				DOWELS

MARK	SIZE	NO.	LENGTH	TYPE	INCREMENT	LOCATION AND REMARKS
EXISTING STRUCTURAL SLAB REHAB						
C501	5	24	18'-0"	STR		STEEL LONGITUDINAL LANE 7
C502	5	6	9'-4"	STR		STEEL LONGITUDINAL LANE 7
C503	5	6	5'-8"	STR		STEEL LONGITUDINAL LANE 7
C504	5	6	3'-0"	STR		STEEL LONGITUDINAL LANE 7
C505	5	6	1'-4"	STR		STEEL LONGITUDINAL LANE 7
C506	5	12	10'-0"	STR		STEEL LONGITUDINAL LANE 7 (ISLAND NOSE)
C507	5	10	9'-8"	STR		STEEL TRANSVERSE LANE 7
C508	5	2	10'-0"	STR		STEEL TRANSVERSE LANE 7
C509	5	2	10'-4"	STR		STEEL TRANSVERSE LANE 7
C510	5	2	10'-7"	STR		STEEL TRANSVERSE LANE 7
C511	5	2	11'-0"	STR		STEEL TRANSVERSE LANE 7
C512	5	2	11'-5"	STR		STEEL TRANSVERSE LANE 7
C513	5	2	11'-10"	STR		STEEL TRANSVERSE LANE 7
C514	5	2	12'-3"	STR		STEEL TRANSVERSE LANE 7
C515	5	2	12'-11"	STR		STEEL TRANSVERSE LANE 7
C516	5	2	13'-7"	STR		STEEL TRANSVERSE LANE 7
C517	5	2	14'-5"	STR		STEEL TRANSVERSE LANE 7
C518	5	2	15'-2"	STR		STEEL TRANSVERSE LANE 7
C519	5	2	16'-1"	STR		STEEL TRANSVERSE LANE 7
C520	5	4	36'-1"	STR		STEEL TRANSVERSE LANES 7 & 8
C521	5	18	5'-6"	STR		STEEL TRANSVERSE LANE 8 (ISLAND NOSE)
C522	5	22	18'-0"	STR		STEEL LONGITUDINAL LANE 8
C523	5	2	9'-4"	STR		STEEL LONGITUDINAL LANE 8
C524	5	2	5'-8"	STR		STEEL LONGITUDINAL LANE 8
C525	5	2	3'-0"	STR		STEEL LONGITUDINAL LANE 8
C526	5	2	1'-4"	STR		STEEL LONGITUDINAL LANE 8
C527	5	12	9'-8"	STR		STEEL TRANSVERSE LANE 8
C528	5	4	10'-2"	STR		STEEL TRANSVERSE LANE 8
C529	5	4	10'-4"	STR		STEEL TRANSVERSE LANE 8
C530	5	4	10'-9"	STR		STEEL TRANSVERSE LANE 8
C531	5	4	11'-5"	STR		STEEL TRANSVERSE LANE 8
C532	5	2	12'-0"	STR		STEEL TRANSVERSE LANE 8
C533	5	2	12'-6"	STR		STEEL TRANSVERSE LANE 8
C534	5	2	12'-11"	STR		STEEL TRANSVERSE LANE 8
DOWELS	5	250	3'-7"	STR		STEEL DOWELS
*C601	5	82	44'-8"	STR		GFRP LONGITUDINAL LANES 7 & 8
*C602	5	64	24'-8"	STR		GFRP LONGITUDINAL LANES 7 & 8
*C603	5	160	9'-6"	STR		GFRP TRANSVERSE LANES 7 & 8
*C604	5	100	36'-1"	STR		GFRP TRANSVERSE LANES 7 & 8
*DOWELS	5	250	4'-9"	STR		GFRP DOWELS

*GFRP

Date:5/15/2015

Filename: 108_Reinforcement_Schedule.dgn

Scale:

No.	Revision	By	Date

Designed by:

HNTB

CONSULTANT PROJECT MANAGER: R. Bruce Munger, P.E.

	By	Date		By	Date
Designed	GLS	05/15	Checked	AJF	05/15
Drawn	PEB	05/15	In Charge of	RAL	05/15

HNTB CORPORATION
340 County Road, Suite 6-C
Westbrook, ME 04092
TEL (207) 774-5155
FAX (207) 228-0909

MAINE TURNPIKE

THE GOLD STAR MEMORIAL HIGHWAY

MTA PROJECT MANAGER: William Yates

FALMOUTH SPUR TOLL PLAZA
ORT CONVERSION

REINFORCEMENT SCHEDULE 1

SHEET NUMBER: S-19

CONTRACT:2015.13

TOLL ISLAND F PROPOSED NOSE REBAR

MARK	SIZE	NO.	LENGTH	TYPE	A	B	C	D	LOCATION AND REMARKS
C401	5	1	12'-10"	STR					LONGITUDINAL (FIELD BEND)
C402	5	1	18'-3"	STR					LONGITUDINAL
C403	5	1	13'-2"	STR					LONGITUDINAL
C404	5	1	9'-3"	STR					LONGITUDINAL
C405	5	1	5'-8"	STR					LONGITUDINAL
C406	5	1	2'-10"	STR					LONGITUDINAL
C407	5	6	1'-10"	17		0'-8"	0'-6"	0'-8"	TRANSVERSE
C408	5	4	2'-5"	17		0'-8"	1'-1"	0'-8"	TRANSVERSE
C409	5	3	3'-2"	17		0'-8"	1'-10"	0'-8"	TRANSVERSE
C410	5	2	3'-10"	17		0'-8"	2'-6"	0'-8"	TRANSVERSE
C411	5	1	4'-5"	17		0'-8"	3'-1"	0'-8"	TRANSVERSE
C412	5	1	4'-11"	17		0'-8"	3'-7"	0'-8"	TRANSVERSE
C413	5	1	5'-5"	17		0'-8"	4'-1"	0'-8"	TRANSVERSE
C414	5	1	5'-9"	17		0'-8"	4'-5"	0'-8"	TRANSVERSE
C415	5	1	6'-1"	17		0'-8"	4'-9"	0'-8"	TRANSVERSE
C801	8	32	1'-3"	STR		0'-8"	4'-9"	0'-8"	DOWELS

TOLL ISLAND F PROPOSED SLAB REBAR

MARK	SIZE	NO.	LENGTH	TYPE	A	B	C	D	LOCATION AND REMARKS
C416	5	7	19'-3"	STR					LONGITUDINAL
C417	5	20	8'-8"	17		0'-8"	7'-4"	0'-8"	TRANSVERSE
C801	8	48	1'-3"	STR					DOWELS
C802	8	7	2'-2"	17		0'-6"	1'-8"	0'-0"	DOWELS

CANOPY SPREAD FOOTING

MARK	SIZE	NO.	LENGTH	TYPE	A	B	C	D	LOCATION AND REMARKS
F801	6	80	8'-6"	STR					
P804	6	32	6'-7"	17		2'-9"	3'-10"		
P805	6	8	8'-7"	17		2'-9"	5'-10"		
P406	4	12	8'-5"	100	1'-11"	1'-11			

SOUTHERN STAIRCASE ENCLOSURE

MARK	SIZE	NO.	LENGTH	TYPE	A	B	C	D	LOCATION AND REMARKS
SW503	5	26	6'-0"	17		4'-6"	1'-6"		EMBED IN STRUCTURAL SLAB
SW504	5	16	17'-6"	STR					
SW505	5	2	5'-2"	STR					
SW506	5	2	5'-6"	STR					
SW507	5	2	5'-10"	STR					
SW508	5	2	6'-2"	STR					

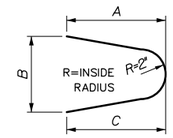

TYPE 13A

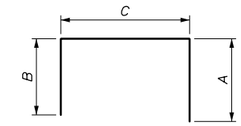

TYPE 17

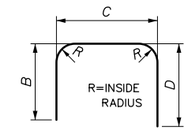

TYPE 17A

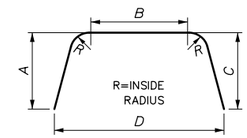

TYPE 17B

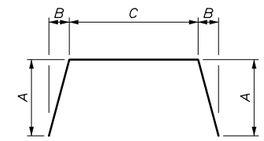

TYPE 17C

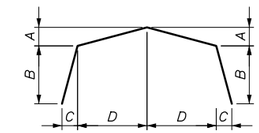

TYPE 17D

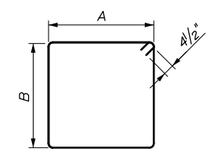

TYPE 100

Date:5/15/2015

Filename: 109_Reinforcement_Schedule 2.dgn

Scale:

No.	Revision	By	Date

Designed by:

HNTB

CONSULTANT PROJECT MANAGER: R. Bruce Munge, P.E.

	By	Date		By	Date
Designed	GLS	05/15	Checked	AJF	05/15
Drawn	PEB	05/15	In Charge of	RAL	05/15

HNTB CORPORATION
340 County Road, Suite 6-C
Westbrook, ME 04092
TEL (207) 774-5155
FAX (207) 228-0909

MAINE TURNPIKE

THE GOLD STAR MEMORIAL HIGHWAY

MTA PROJECT MANAGER: William Yates

FALMOUTH SPUR TOLL PLAZA
ORT CONVERSION

REINFORCEMENT SCHEDULE 2

SHEET NUMBER: S-20

CONTRACT:2015.13

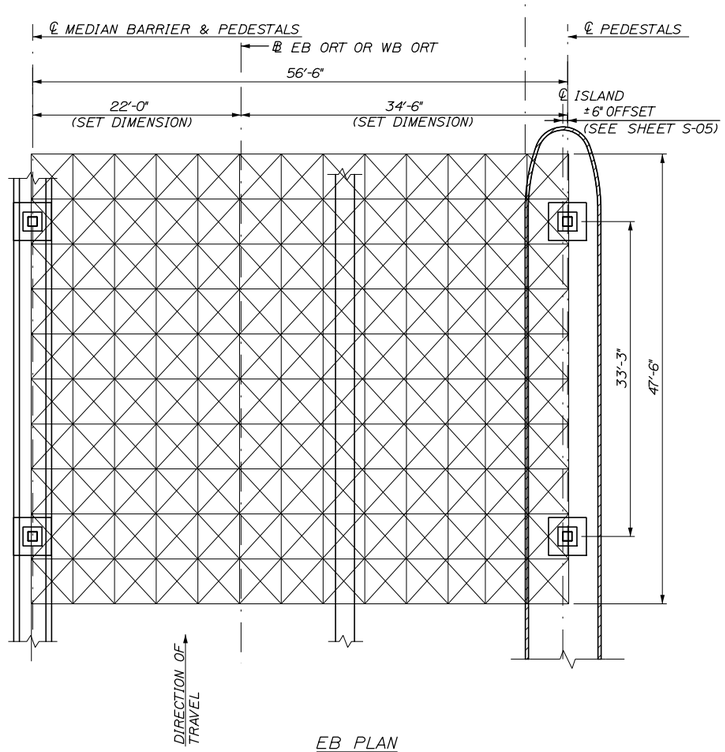

EB PLAN

(WB SIMILAR)

(BARRIER FENCE AND EXTENDED TOLL ISLAND NOT SHOWN FOR CLARITY)

SCALE: 1/8"=1'-0"

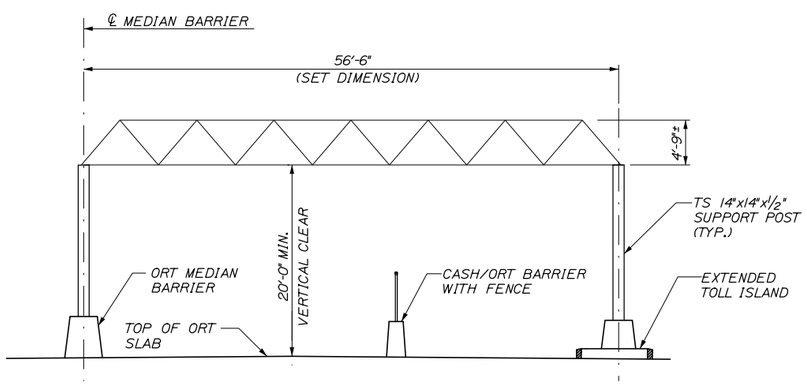

EB ELEVATION

(WB SIMILAR)

SCALE: 1/8"=1'-0"

GENERAL NOTES:

1. THESE ARE SPACE FRAME DESIGN CRITERIA DOCUMENTS: PRELIMINARY PLANS NOT TO BE USED FOR CONSTRUCTION. THESE PLANS ARE PROVIDED FOR INFORMATIONAL PURPOSES ONLY, INTENDED TO ESTABLISH THE PROPOSED PROJECT'S DESIGN AND CONSTRUCTION INTENT, QUALITY AND CHARACTER. CONTRACTOR SHALL USE THESE PLANS IN ACCORDANCE WITH THE SPECIFICATIONS.

2. PEDESTAL SHALL BE OFFSET 6" FROM ISLAND EXTENSION CENTERLINE TO ACCOMODATE 56'-6" SPACE FRAME DIMENSION.

SPACE FRAME NOTES:

ALL DESIGN AND DETAILS OF CONSTRUCTION SHALL CONFORM TO THE APPLICABLE REQUIREMENTS OF THE FOLLOWING:

A. 2013 AASHTO STANDARD SPECIFICATIONS FOR STRUCTURAL SUPPORTS FOR HIGHWAY SIGNS, LUMINAIRES AND TRAFFIC SIGNALS, WITH 2015 INTERIMS.

B. 2015 AASHTO LRFD BRIDGE CONSTRUCTION SPECIFICATIONS, 4th EDITION.

WIND LOAD:

A. WIND LOAD:
DESIGN WIND SPEED, V = 95 MPH
IMPORTANCE FACTOR, Ip = 1.0

B. A PROVISIONAL AREA FOR SIGN PANELS OF 4' HIGH x 57' LONG AT THE ON-COMING TRAFFIC END OF THE SPACE FRAME.

ICE LOAD:

A. ICE LOAD: 3 PSF APPLIED VERTICALLY ON FULL CIRCUMFERENCE OF ALL MEMBERS AND VERTICAL FACES OF SIGN PANELS.

DEAD LOAD:

A. 10 PSF DEAD LOAD APPLIED OVER THE ENTIRE PLAN AREA OF THE SPACE FRAME IN ADDITION TO THE SELF WEIGHT OF THE STRUCTURE.

B. A SINGLE 200LB DEAD LOAD APPLIED TO ANY NODE, CHORD OR CONNECTION ON THE SPACE FRAME. SEE ORT EQUIPMENT DETAIL LAYOUT FOR APPROXIMATE QUANTITY AND LOCATION OF LOADING.

C. A PROVISIONAL DEAD LOAD OF 100 LB PER FOOT FOR SIGN PANELS OVER THE ON-COMING TRAFFIC END OF THE SPACE FRAME.

STRUCTURAL STEEL:

A. STRUCTURAL STEEL PLATES AND SHAPES SHALL BE ASTM A572 GR. 50 AND SHALL MEET THE REQUIREMENTS OF AWS D1.1 SECTION 4 PART D FOR CVN TESTING.

B. STRUCTURAL TUBING SHALL BE MINIMUM ASTM A500, GRADE B (Fy = 46 ksi), DIAMETER PER FABRICATOR DESIGN.

C. ALL STRUCTURAL STEEL SHALL BE GALVANIZED IN ACCORDANCE WITH ASTM A123.

WELDING:

AMERICAN WELDING SOCIETY (AWS) D1.1 STRUCTURAL WELDING CODE - STEEL.

BOLTED CONNECTIONS:

UNLESS OTHERWISE NOTED, ALL BOLTED CONNECTIONS SPECIFYING BOLT DIAMETER 1/2" AND LARGER SHALL BE:
BOLTS - ASTM A325X TYPE 1 (THREADS EXCLUDED FROM SHEAR PLANE).
NUTS - ASTM A563
WASHERS - ASTM F436
NUTS, BOLTS AND WASHERS SHALL BE GALVANIZED IN ACCORDANCE WITH ASTM A153.

ANCHOR BOLTS:

ANCHOR BOLTS SHALL CONFORM TO ASTM F1554 GR. 105. NUTS SHALL CONFORM TO ASTM A563 AND PLATE WASHERS SHALL CONFORM TO ASTM A709, GR. 50. NUTS, BOLTS AND PLATE WASHERS SHALL BE FULLY GALVANIZED IN ACCORDANCE WITH ASTM A153.

SHOP DRAWINGS:

THE SHOP DRAWINGS AND DESIGN CALCULATIONS FOR THE SPACE FRAME SELECTED BY THE CONTRACTOR SHALL BE PREPARED UNDER THE SUPERVISION OF A PROFESSIONAL ENGINEER LICENSED IN THE STATE OF MAINE AND SHALL HAVE THE SIGNATURE AND SEAL OF THAT PROFESSIONAL ENGINEER. FOR METAL FABRICATION WORK, APPROVED SHOP DRAWINGS SHALL BE AT THE METAL FABRICATOR'S SHOP PRIOR TO COMMENCEMENT OF FABRICATION. THE APPROVED SHOP DRAWINGS SHALL BE AVAILABLE AND ACCESSIBLE TO MAINE TURNPIKE INSPECTORS AT ALL TIMES AND MAY BE PHOTOCOPIED.

CAMBER:

THE SPACE FRAME SHALL HAVE A RESIDUAL UPWARD CAMBER OF SPAN/1000 IN LONGITUDINAL AND TRANSVERSE DIRECTIONS.

MANUFACTURER:

THE DESIGN, FABRICATION AND FURNISHING OF THE SPACE FRAME STRUCTURE SHALL BE PERFORMED BY THE FABRICATORS LISTED IN THE CONTRACT SPECIFICATIONS OR AN APPROVED EQUAL.

DESIGN LOADS:

THE CONTRACTOR SHALL FURNISH FINAL SPACE FRAME CANOPY DESIGN REACTIONS TO THE RESIDENT WITHIN 30 DAYS OF AWARD OF CONTRACT.

ERECTION NOTES:

1. THE CONTRACTOR AND SPACE FRAME FABRICATOR ARE TO CAREFULLY REVIEW THESE PLANS AND SPECIFICATIONS. CONDITIONS AT THE PROPOSED CONSTRUCTION SITE ALLOW LIMITED AREA FOR STAGING AND ASSEMBLY OF THE SPACE FRAME. THESE CONDITIONS MAY PRECLUDE SINGLE STAGE ERECTION OF THE SPACE FRAME.

Date:5/15/2015

Filename: 110_S_ORT Space Frame Structure.dgn

Scale:

No.	Revision	By	Date

Designed by:

HNTB

CONSULTANT PROJECT MANAGER: R. Bruce Munger, P.E.

	By	Date		By	Date
Designed	AJF	05/15	Checked	CRM	05/15
Drawn	MPC	05/15	In Charge of	RAL	05/15

HNTB CORPORATION
340 County Road, Suite 6-C
Westbrook, ME 04092
TEL (207) 774-5155
FAX (207) 228-0909

MAINE TURNPIKE

THE GOLD STAR MEMORIAL HIGHWAY

MTA PROJECT MANAGER: William Yates

FALMOUTH SPUR TOLL PLAZA
ORT CONVERSION

ORT SPACE FRAME
PLAN AND ELEVATION

SHEET NUMBER: S-21

CONTRACT:2015.13

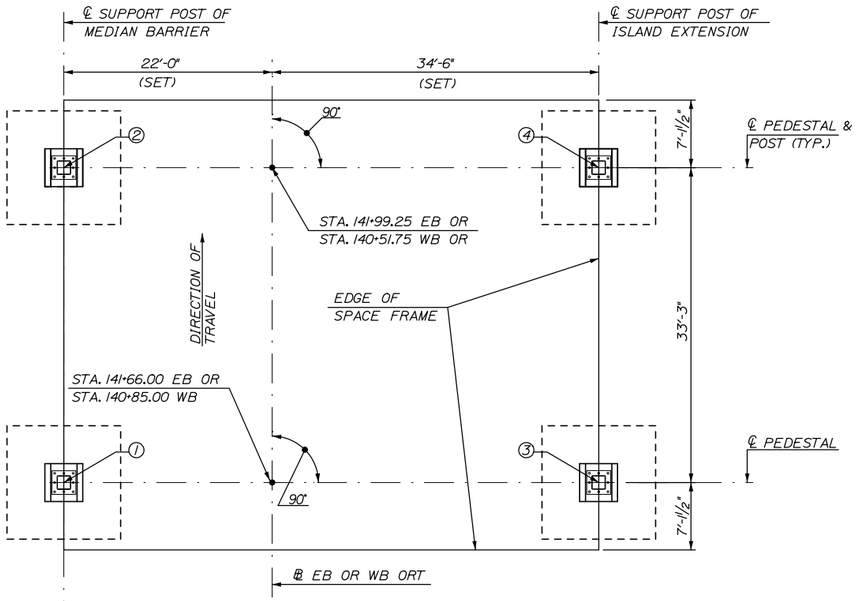

EB FOUNDATION LOCATION PLAN

(WB SIMILAR)

SCALE: 1/8"= 1'-0"

REINFORCING SCHEDULE								
MARK	SIZE	NO.	LENGTH	TYPE	A	B	C	D
F100	6	416	11'-6"	STR.				
P100	8	64	10'-3"	118	8'-10"	1'-5"		
P101	8	96	10'-3 1/2 "	119	5'-3"	1'-5"	3'-7"	7"
P102	4	32	15'-5"	100	3'-8"	3'-8"		
P103a to d	4	32	MAX. 15'-5" MIN. 13'-0"	100	MAX. 3'-8" MIN. 2'-5½"	3'-8"		

TYPE 118

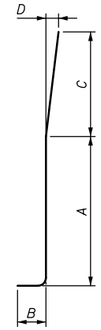

TYPE 119

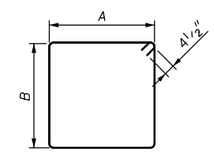

TYPE 100

NOTES:

1. CONCRETE SHALL BE CLASS AAA, f'c = 4500 PSI.
2. REINFORCEMENT SHALL BE EPOXY COATED ASTM A775, GRADE 60.
3. CONCRETE FOR THE PEDESTALS AND FOOTINGS SHALL BE PAID FOR UNDER ITEM 502.231 - STRUCTURAL CONCRETE SPACE FRAME FOUNDATIONS.
4. EXISTING 12" DRAINAGE PIPES FOR THE CANOPY AND TREADLE DRAINS ARE APPROXIMATELY LOCATED 2' FROM EDGE OF STRUCTURAL SLABS. CONTRACTOR SHALL AVOID DISTURBING PIPE.
5. LIMITS OF TEMP EARTH SUPPORT SYSTEMS ARE 18" FROM EDGE OF SPACE FRAME FOUNDATIONS. CONTRACTOR MAY OPEN CUT FOR CONSTRUCTION PORTIONS OF THE SPACE FRAME FOUNDATIONS. EXCAVATION, GRAVEL AND PAVEMENT BEYOND LIMITS OF THE TEMPORARY EARTH SUPPORT SYSTEMS WILL BE INCIDENTAL TO THE TEMPORARY EARTH SUPPORT SYSTEMS.
6. ADJACENT TOLL PLAZA STRUCTURAL SLAB SHALL NOT BE UNDERMINED FROM EXCAVATION AND CONSTRUCTION OF SPACE FRAME FOUNDATIONS AND PEDESTALS.

FOUNDATION ELEVATIONS				
ROADWAY	FOUNDATION	ELEV. A	ELEV. B	ELEV. C
WB	①	182.95	179.20	173.20
	②	182.93	179.09	173.09
	③	182.53	178.78	172.78
	④	182.16	178.41	172.41
EB	①	182.75	179.00	173.00
	②	182.56	178.81	172.81
	③	181.82	178.07	172.07
	④	181.32	177.57	171.57

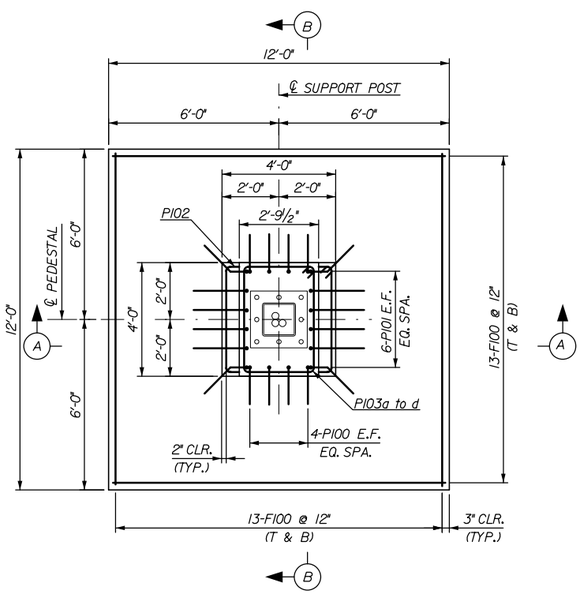

PLAN VIEW

SCALE: 3/8"= 1'-0"

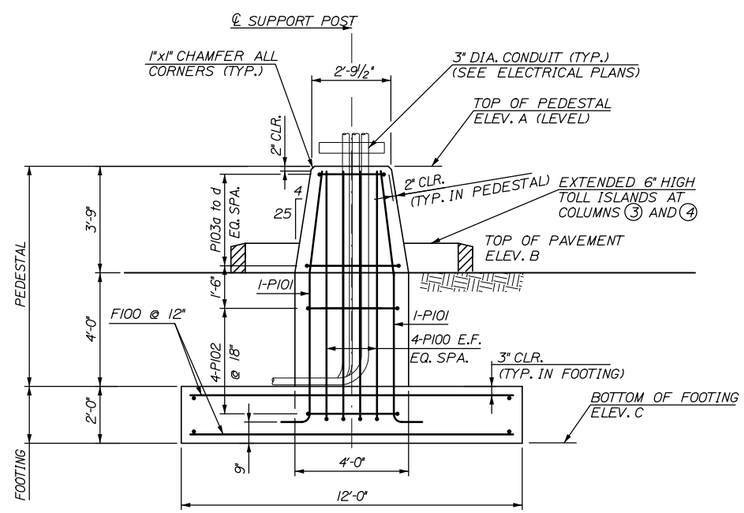

SECTION A-A

SCALE: 3/8"= 1'-0"

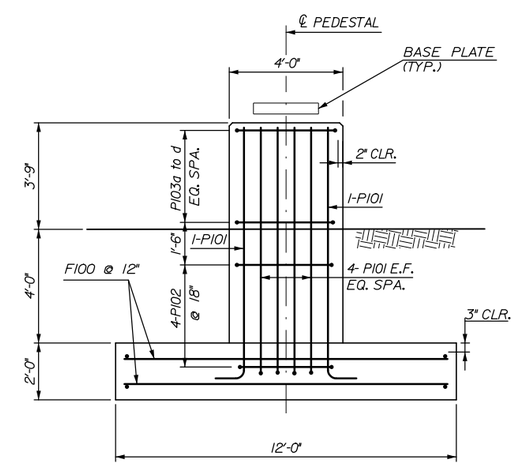

SECTION B-B

SCALE: 3/8"= 1'-0"

STRUCTURE FOUNDATION

Date:5/15/2015

Filename: 111_Space Frame foundation details.dgn

Scale: AS NOTED			
No.	Revision	By	Date

Designed by: HNTB

CONSULTANT PROJECT MANAGER: R. Bruce Munger, P.E.

	By	Date		By	Date
Designed	AJF	05/15	Checked	CRM	05/15
Drawn	MPC	05/15	In Charge of	RAL	05/15

HNTB CORPORATION
340 County Road, Suite 6-C
Westbrook, ME 04092
TEL (207) 774-5155
FAX (207) 228-0909

MAINE TURNPIKE

THE GOLD STAR MEMORIAL HIGHWAY

MTA PROJECT MANAGER: William Yates

FALMOUT SPUR TOLL PLAZA
ORT CONVERSION

ORT SPACE FRAME
FOUNDATION DETAILS

SHEET NUMBER: S-22

CONTRACT:2015.13

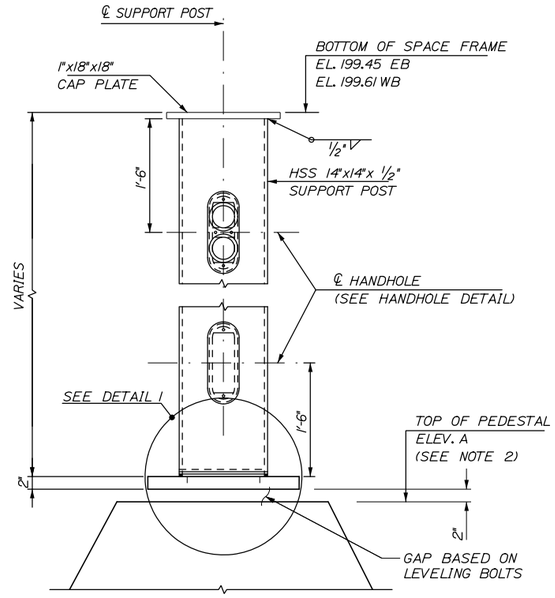

POST ELEVATION

1" = 1'-0"

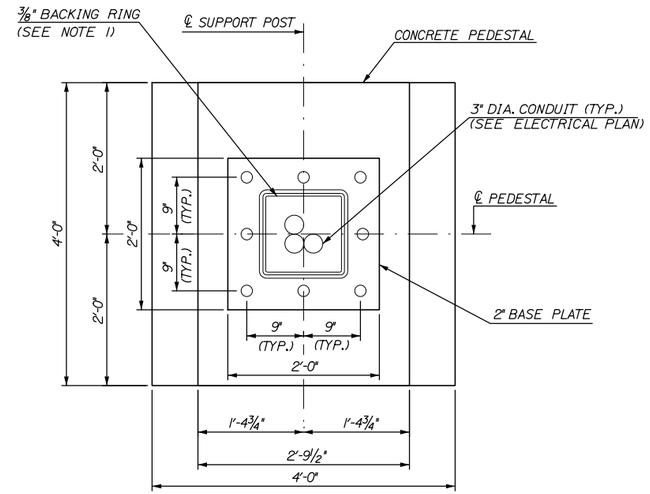

PEDESTAL PLAN VIEW

1" = 1'-0"

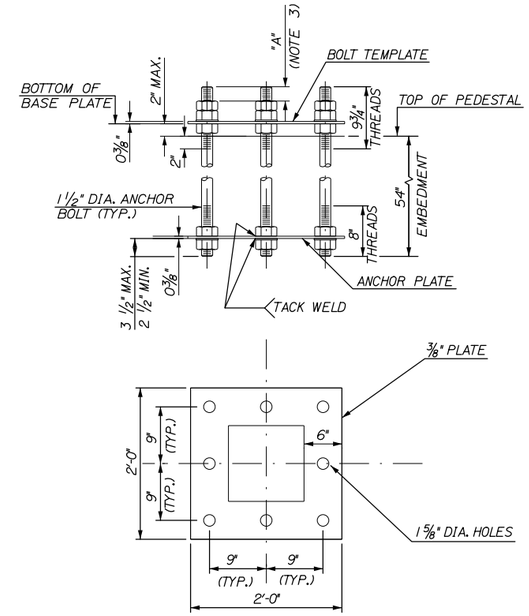

ANCHOR PLATE/BOLT TEMPLATE DETAIL

1" = 1'-0"

NOTES:

1. FULL PENETRATION WELDED SUPPORT POST TO BASE PLATE CONNECTION WITH THE BACKING RING ATTACHED TO THE BASE PLATE WITH A CONTINUOUS FILLET WELD AROUND THE INTERIOR FACE OF THE BACKING RING. THE THICKNESS OF THE BACKING RING SHALL NOT EXCEED 3/8".
2. FOR PEDESTAL ELEVATIONS, SEE FOUNDATION ELEVATIONS TABLE ON SHEET S-22.
3. DIMENSION "A" SHALL BE BETWEEN 1" MAX. AND 1/2" MIN. ONCE THE 2" BASE PLATE HAS BEEN INSTALLED.
4. ALL STEEL COMPONENTS AND HARDWARE SHALL BE HOT DIP GALVANIZED AFTER FABRICATION IN ACCORDANCE WITH ASTM A123 AND ASTM A153 AS APPLICABLE.

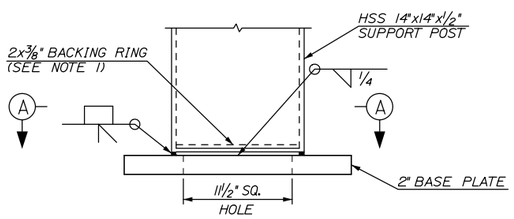

DETAIL 1

1 1/2" = 1'-0"

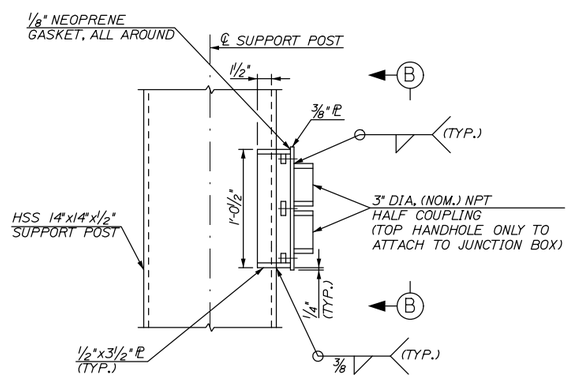

HANDHOLE DETAIL

1 1/2" = 1'-0"

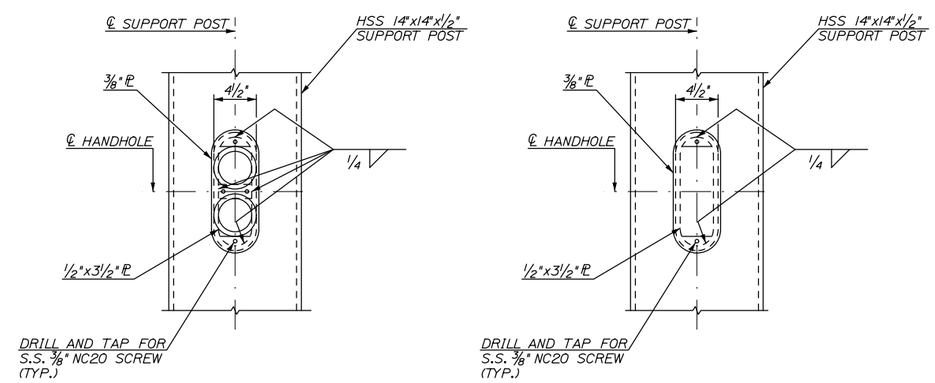

TOP HANDHOLE

BOTTOM HANDHOLE

VIEW B-B

1 1/2" = 1'-0"

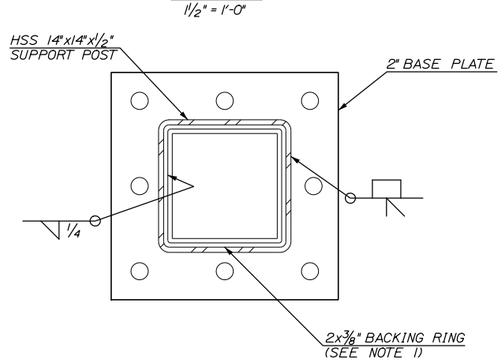

SECTION A-A

1 1/2" = 1'-0"

Date:5/15/2015

Filename: 112_S_ORT Space Frame post.dgn

Scale:			
No.	Revision	By	Date

Designed by:

HNTB

CONSULTANT PROJECT MANAGER: R. Bruce Munger, P.E.

	By	Date		By	Date
Designed	GLS	05/15	Checked	AJF	05/15
Drawn	MPC	05/15	In Charge of	RAL	05/15

HNTB CORPORATION
340 County Road, Suite 6-C
Westbrook, ME 04092
TEL (207) 774-5155
FAX (207) 228-0909

MAINE TURNPIKE

THE GOLD STAR MEMORIAL HIGHWAY

MTA PROJECT MANAGER: William Yates

FALMOUTH SPUR TOLL PLAZA
ORT CONVERSION

ORT SPACE FRAME
POST DETAILS

SHEET NUMBER: S-23

CONTRACT:2015.13

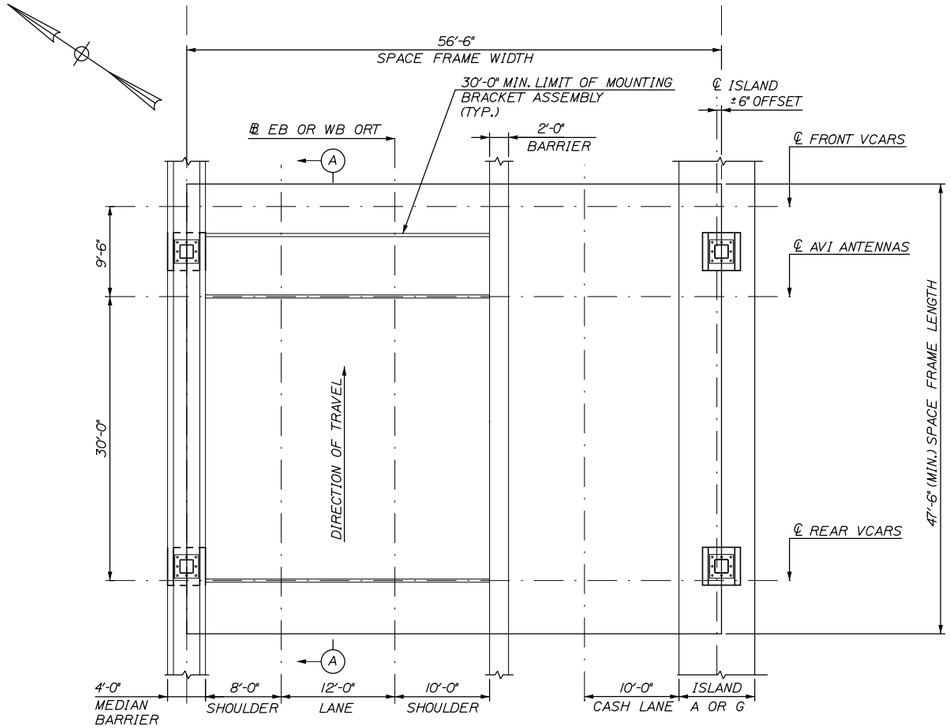

EB PLAN
(WB SIMILAR)
SCALE: 1/8" = 1'-0"

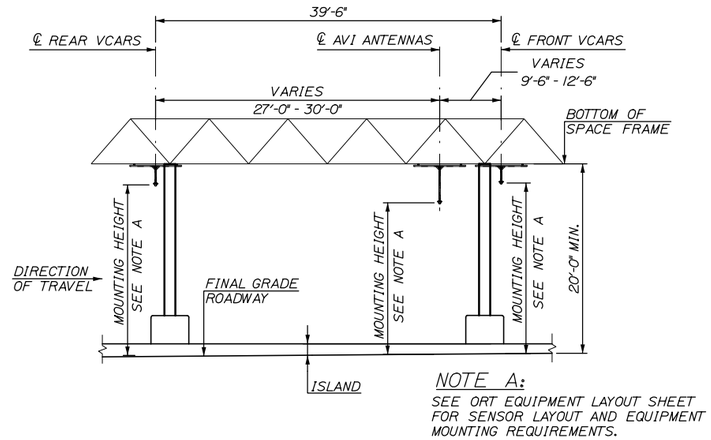

NOTE A:
SEE ORT EQUIPMENT LAYOUT SHEET FOR SENSOR LAYOUT AND EQUIPMENT MOUNTING REQUIREMENTS.

SECTION A-A
SCALE: 1/8" = 1'-0"

NOTES:

1. MOUNTING BRACKET ASSEMBLIES SHALL BE CONSTRUCTED OF GALVANIZED UNISTRUT BRAND MATERIALS, OR AN APPROVED EQUAL.
2. SEE ELECTRICAL PLANS FOR LAYOUT OF VCARS, AVI ANTENNAS AND DVAS CAMERAS. SEE ORT EQUIPMENT LAYOUT FOR MOUNTING DETAILS.
3. HORIZONTAL SUPPORTS FOR EQUIPMENT MUST REMAIN WITHIN MOUNTING HEIGHT TOLERANCES. DISCONTINUITY OF 2" DIA. PIPE IS PERMISSIBLE TO ACHIEVE MOUNTING HEIGHTS.
4. PIPE SHALL CONFORM TO ASTM A53, GALVANIZED.
5. S.S. U-BOLTS AND BOLTS SHALL CONFORM TO ASTM A276, TYPE 304.
6. STEEL PLATE SHALL CONFORM TO ASTM A572, GRADE 50, GALVANIZED.
7. THE VCARS (REAR AND FRONT) UNITS AND DVAS CAMERAS WILL BE PROVIDED BY TRANSCORE. THE AVI ANTENNAS WILL BE PROVIDED BY MTA.
8. CLEARANCE FOR VCARS UNITS SHALL BE 6" ON THE SIDES AND 2'-0" ABOVE.
9. ℄ OF P1000 FOR AVI SHALL BE 11'-0" FROM FRONT VCARS ℄.
10. ALL MOUNTING BRACKET ASSEMBLIES SHALL BE CAPABLE OF ±1' OF VERTICAL ADJUSTMENT.

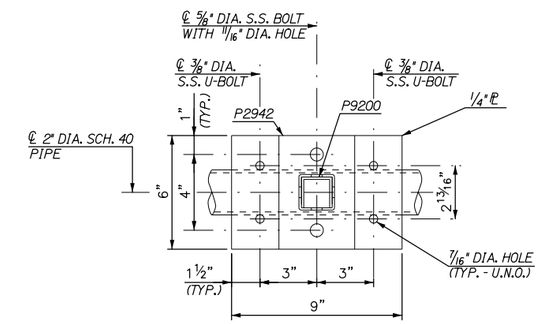

SECTION A-A
SCALE: 3" = 1'-0"

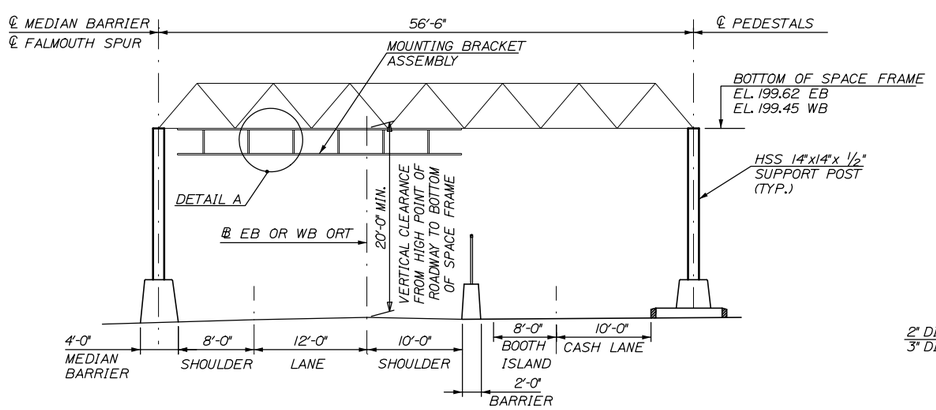

EB ELEVATION
(WB SIMILAR)
SCALE: 1/8" = 1'-0"

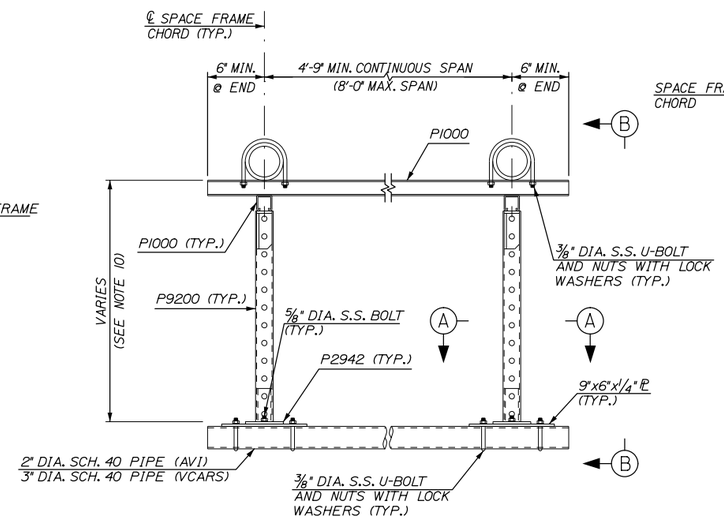

DETAIL A
SCALE: 1 1/2" = 1'-0"

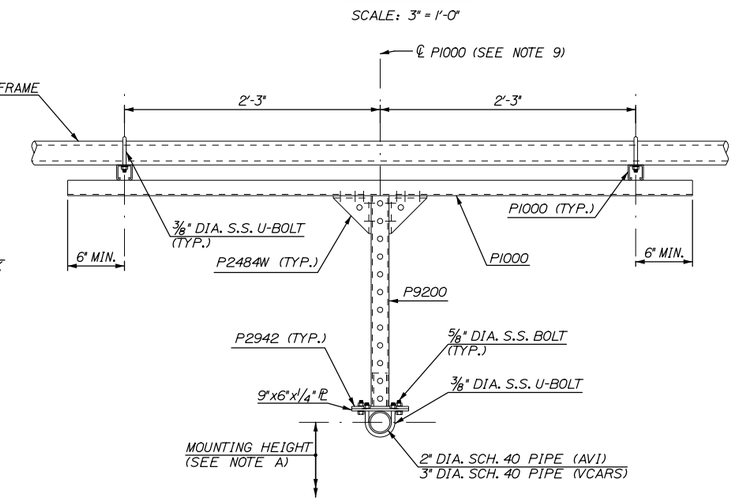

VIEW B-B
SCALE: 1 1/2" = 1'-0"

Date:5/15/2015

Filename: 113_S_ORT Space Frame mounting bracket assembly details.dgn

Scale:

No.	Revision	By	Date

Designed by:

HNTB

CONSULTANT PROJECT MANAGER: R. Bruce Munger, P.E.

	By	Date		By	Date
Designed	GLS	05/15	Checked	AJF	05/15
Drawn	MPC	05/15	In Charge of	RAL	05/15

HNTB CORPORATION
340 County Road, Suite 6-C
Westbrook, ME 04092
TEL (207) 774-5155
FAX (207) 228-0909

MAINE TURNPIKE

THE GOLD STAR MEMORIAL HIGHWAY

MTA PROJECT MANAGER: William Yates

FALMOUTH SPUR TOLL PLAZA
ORT CONVERSION
ORT SPACE FRAME
MOUNTING BRACKET ASSEMBLY DETAILS

SHEET NUMBER: S-24

CONTRACT:2015.13

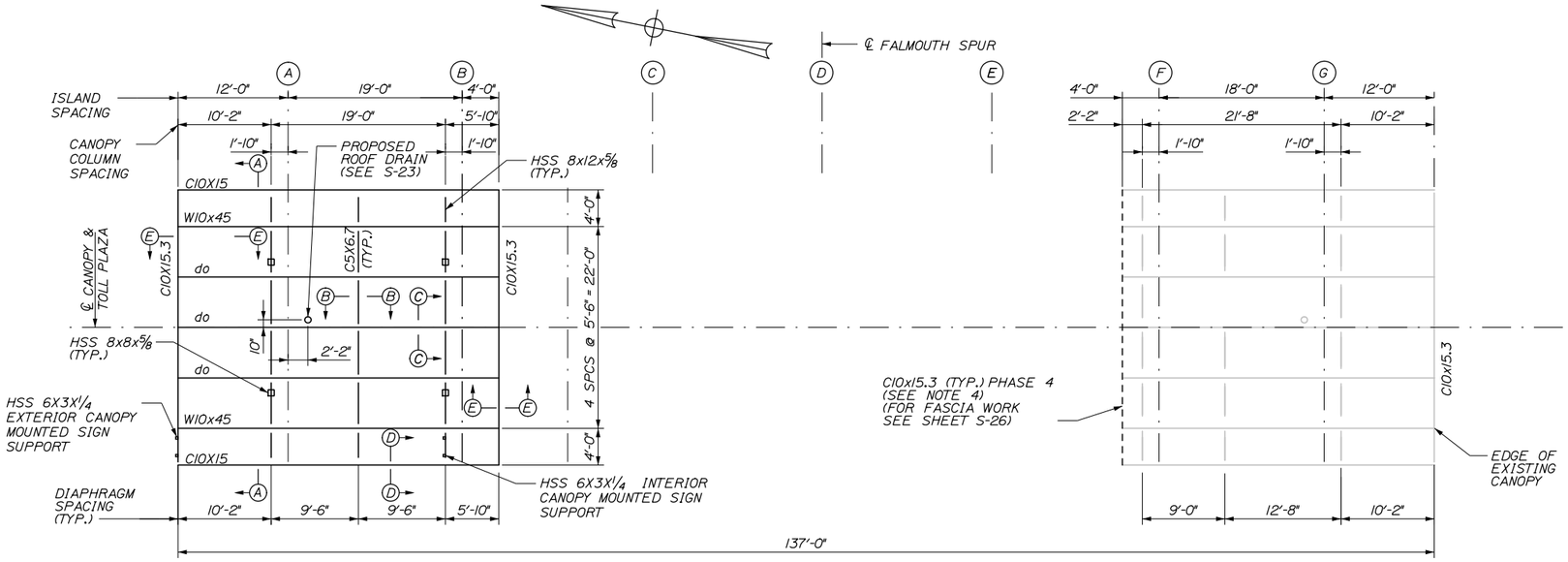

NOTE: CANOPY OFFSET NOT SHOWN FOR CLARITY.

PLAN - TOLL PLAZA

SCALE: 1/8" = 1'-0"

NOTES:

1. FOR FASCIA FINISH DETAILS, SEE SHEET S-26.
2. PROPOSED CANOPY DRAINAGE PIPES AND CONNECTIONS WILL BE INCIDENTAL TO ITEM 800.30, TOLL PLAZA DEMOLITION AND RESTORATION. CONTRACTOR MAY REUSE EXISTING ROOF DRAIN WITH APPROVAL OF RESIDENT.
3. THE CONTRACTOR SHALL FIT ALL ENDS OF CANOPY SIGN SUPPORTS OPEN TO THE WEATHER WITH AN APPROPRIATE CAST ALUMINUM OR GALVANIZED CAST IRON CAP SECURED IN PLACE WITH SET SCREWS. (TYP.)
4. INSTALL NEW C10x15 MEMBER ON EXISTING CANOPY AS SHOWN IN SECTION D-D ON SHEET S-26.
5. SEE SPECIAL PROVISION 506 FOR PAINTING SPECIFICATIONS
6. FOR CANOPY SIGN SUPPORT DETAILS SEE SHEET S-28.

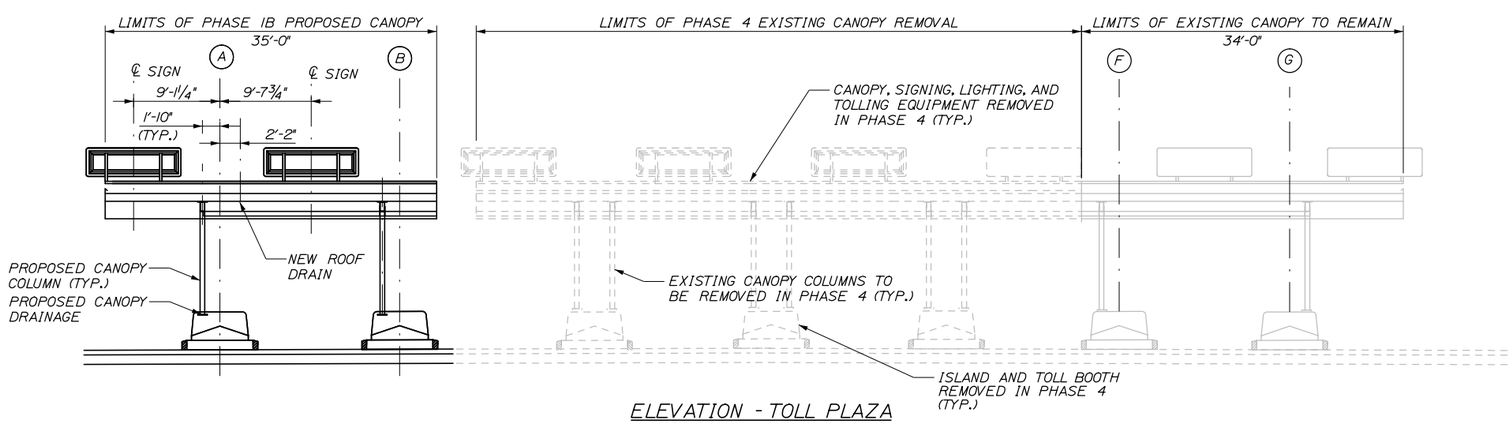

ELEVATION - TOLL PLAZA

SCALE: 1/8" = 1'-0"

Date:5/15/2015

Filename: 114_Canopy Framing & Dets.dgn

Scale:			
No.	Revision	By	Date

Designed by: HNTB

CONSULTANT PROJECT MANAGER: R. Bruce Munger, P.E.

	By	Date		By	Date
Designed	GLS	05/15	Checked	AJF	05/15
Drawn	PEB	05/15	In Charge of	RAL	05/15

HNTB CORPORATION
340 County Road, Suite 6-C
Westbrook, ME 04092
TEL (207) 774-5155
FAX (207) 228-0909

MAINE TURNPIKE

THE GOLD STAR MEMORIAL HIGHWAY

MTA PROJECT MANAGER: William Yates

FALMOUTH SPUR TOLL PLAZA
ORT CONVERSION
CANOPY
FRAMING & DETAILS

SHEET NUMBER: S-25

CONTRACT:2015.13

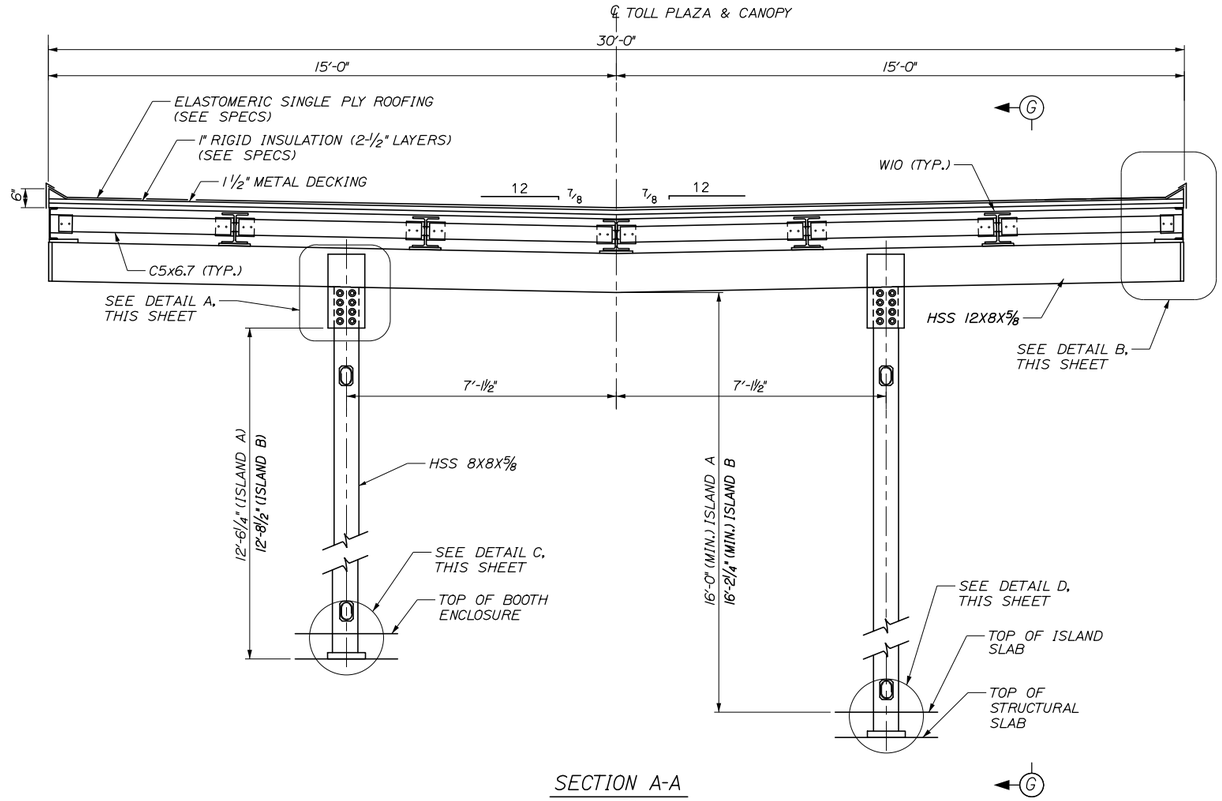

SECTION A-A
NTS

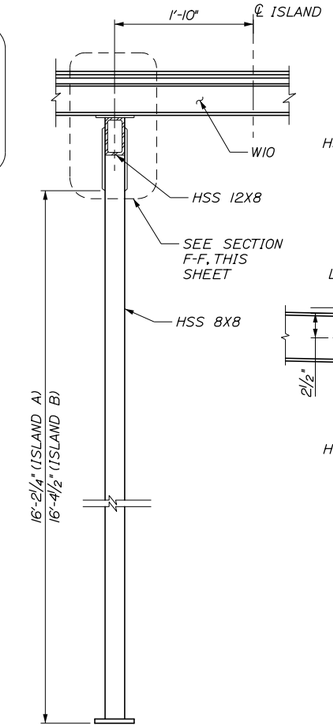

SECTION G-G
NTS

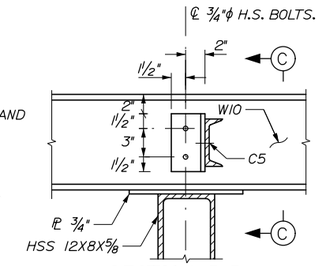

SECTION B-B
NTS

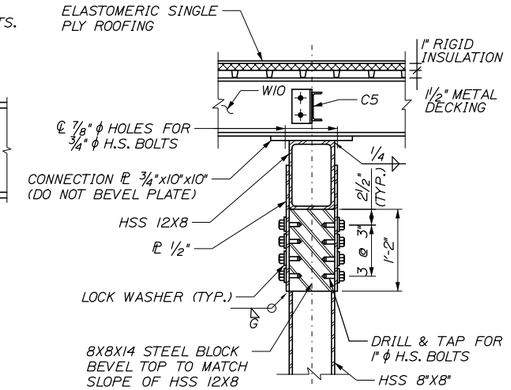

SECTION F-F
NTS

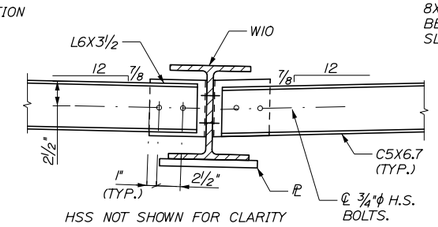

HSS NOT SHOWN FOR CLARITY

SECTION C-C
NTS

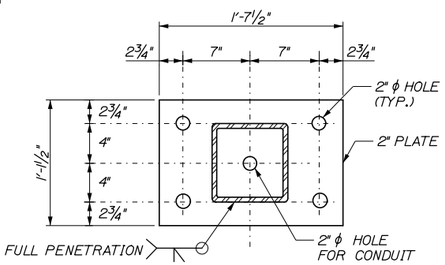

SECTION H-H
NTS

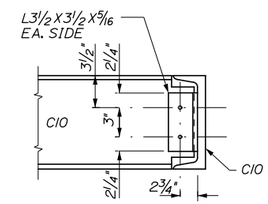

SECTION D-D
NTS

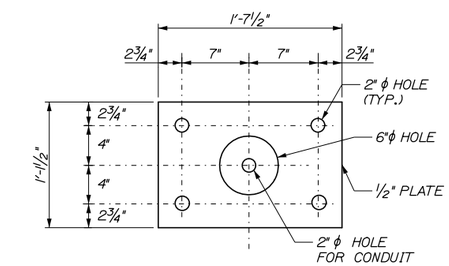

ANCHOR PLATE PLAN
NTS

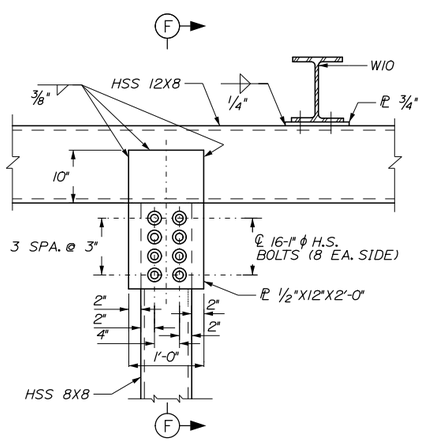

DETAIL A
NTS

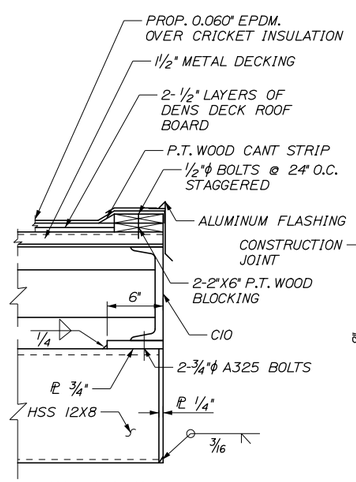

DETAIL B
NTS

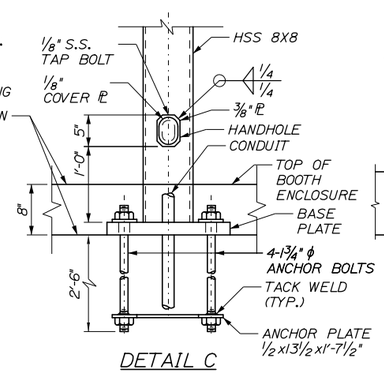

DETAIL C
NTS

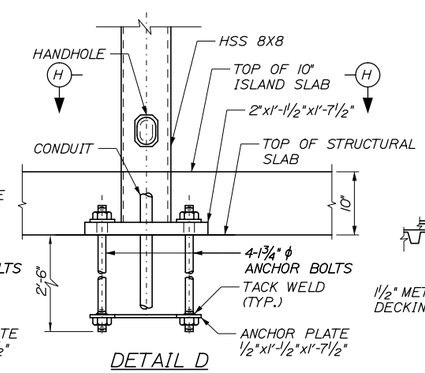

DETAIL D
NTS

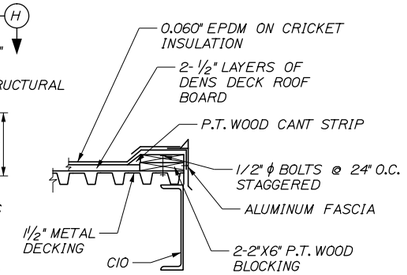

SECTION E-E
NTS

NOTE:

1. FOR ADDITIONAL SECTION LOCATIONS SEE SHEET S-25.

Date:5/15/2015

Filename: 115_Prop Canopy Sections & Dets.dgn

Scale:

No.	Revision	By	Date

Designed by:

HNTB

CONSULTANT PROJECT MANAGER: R. Bruce Munger, P.E.

	By	Date		By	Date
Designed	GLS	05/15	Checked	AJF	05/15
Drawn	PEB	05/15	In Charge of	RAL	05/15

HNTB CORPORATION
340 County Road, Suite 6-C
Westbrook, ME 04092
TEL (207) 774-5155
FAX (207) 228-0909

MAINE TURNPIKE

THE GOLD STAR MEMORIAL HIGHWAY

MTA PROJECT MANAGER: William Yates

FALMOUTH SPUR TOLL PLAZA
ORT CONVERSION
CANOPY
SECTIONS & DETAILS

SHEET NUMBER: S-26

CONTRACT:2015.13

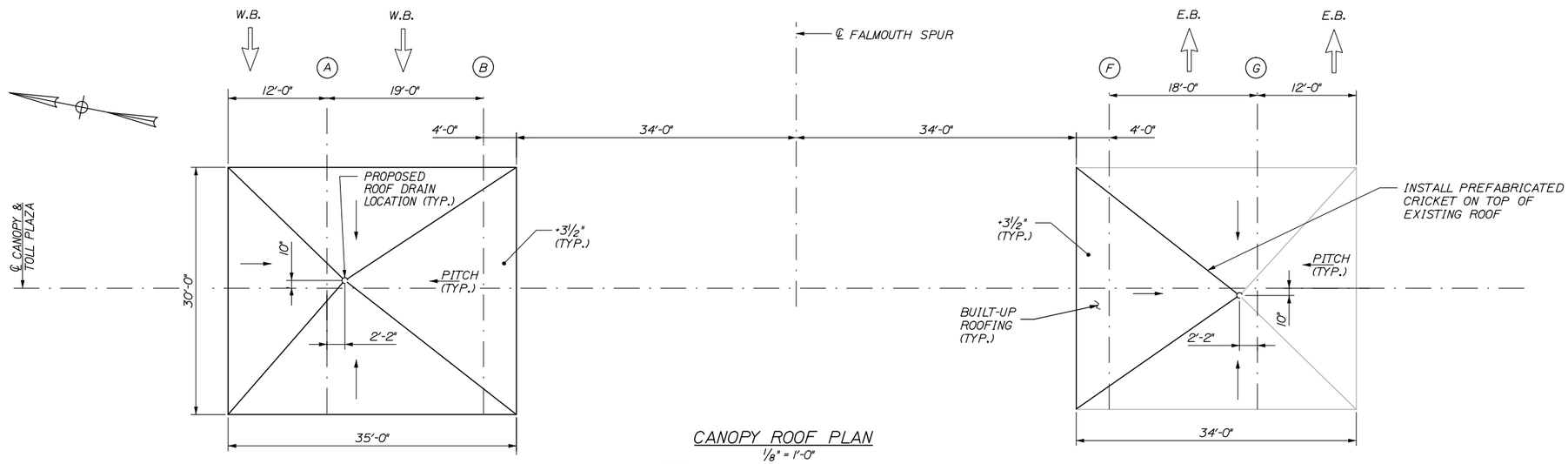

CANOPY ROOF PLAN

1/8" = 1'-0"

NOTE:
CANOPY OFFSET NOT SHOWN FOR CLARITY.

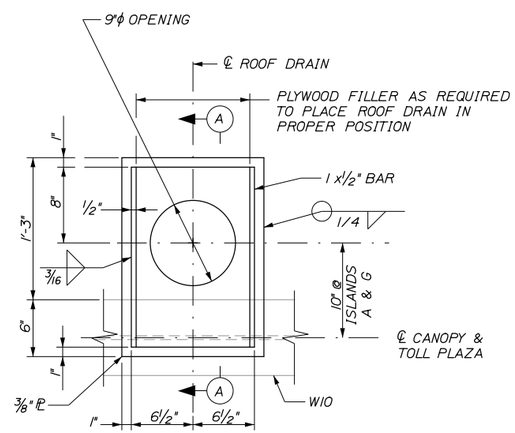

ROOF DRAIN PLAN

NTS

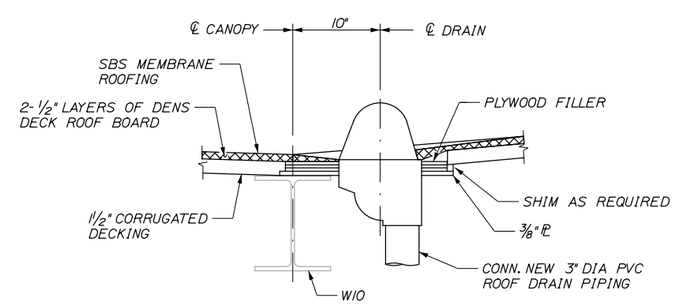

SECTION A - A

NTS

Date:5/15/2015

Filename: 116_S_Canopy Roofing Details.dgn

Scale:

No.	Revision	By	Date

Designed by:

HNTB

CONSULTANT PROJECT MANAGER: R. Bruce Munger, P.E.

	By	Date		By	Date
Designed	GLS	05/15	Checked	AJF	05/15
Drawn	MPC	05/15	In Charge of	RAL	05/15

HNTB CORPORATION
340 County Road, Suite 6-C
Westbrook, ME 04092
TEL (207) 774-5155
FAX (207) 228-0909

MAINE TURNPIKE

THE GOLD STAR MEMORIAL HIGHWAY

MTA PROJECT MANAGER: William Yates

FALMOUTH SPUR TOLL PLAZA
ORT CONVERSION

CANOPY
ROOFING DETAILS

SHEET NUMBER: S-27

CONTRACT:2015.13

NOTES:

1. CONTRACTOR TO SUBMIT FLASHING DETAILS FOR REVIEW PRIOR TO CONSTRUCTION.

2. HOLES FOR SIGN COLUMN SUPPORT SHALL BE FIELD DRILLED PRIOR TO ROOF MEMBRANE INSTALLATION. HOLES IN MEMBRANE SHALL BE SEALED WITH APPROVED PRODUCTS.

3. LENGTH OF PROPOSED CANOPY MOUNTED SIGN COLUMNS SHALL BE SELECTED SUCH THAT THE FRONT AND REAR SIGN SUPPORT TUBES ARE AT THE SAME ELEVATION.

4. FOR SIGN SUPPORT LOCATIONS SEE SHEET S-25.

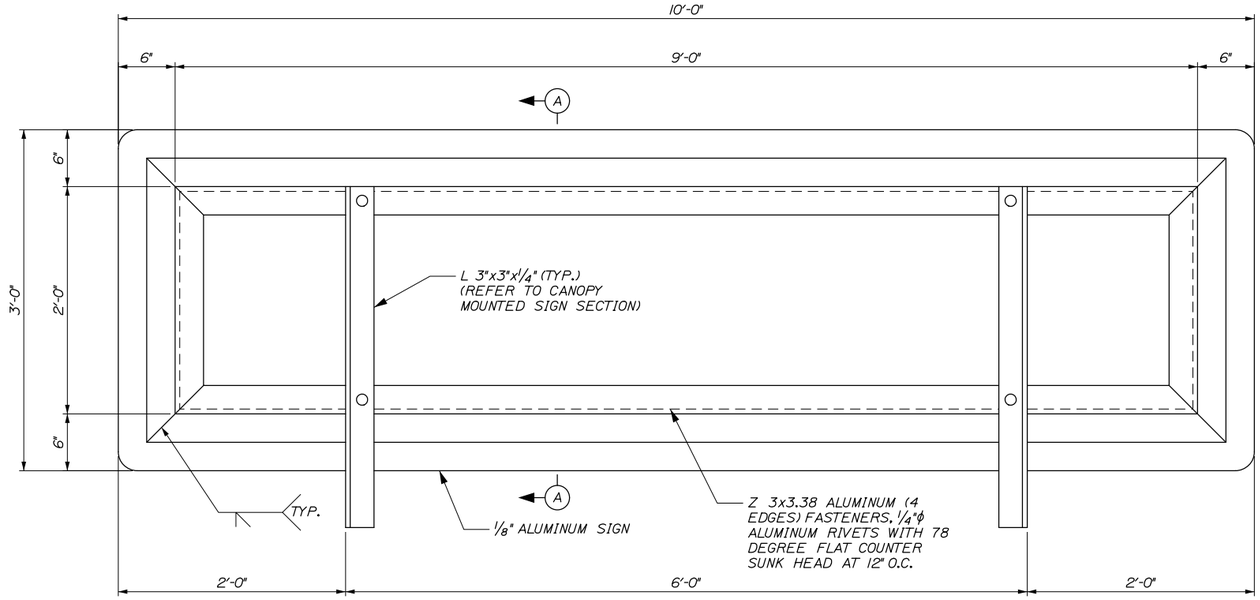

NEW CANOPY SIGN SUPPORT ELEVATION
1 1/2" = 1'-0"

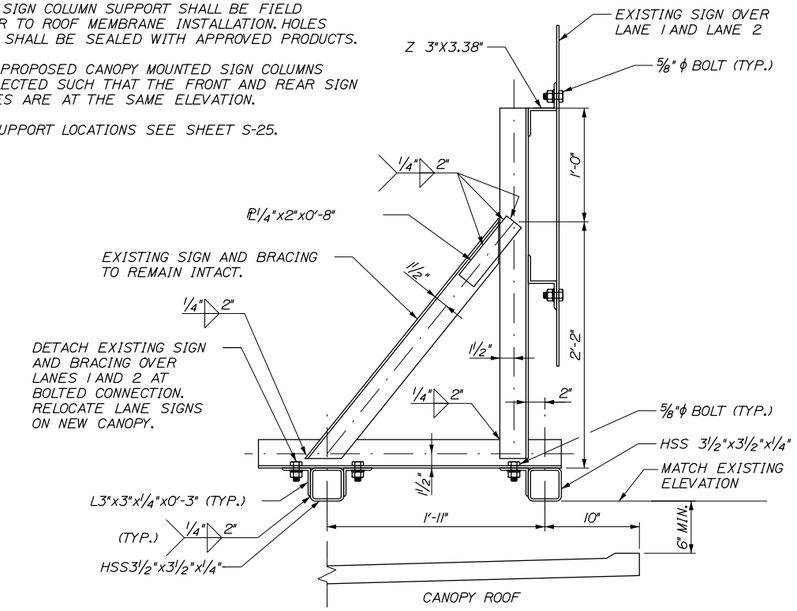

SECTION A-A
1 1/2" = 1'-0"

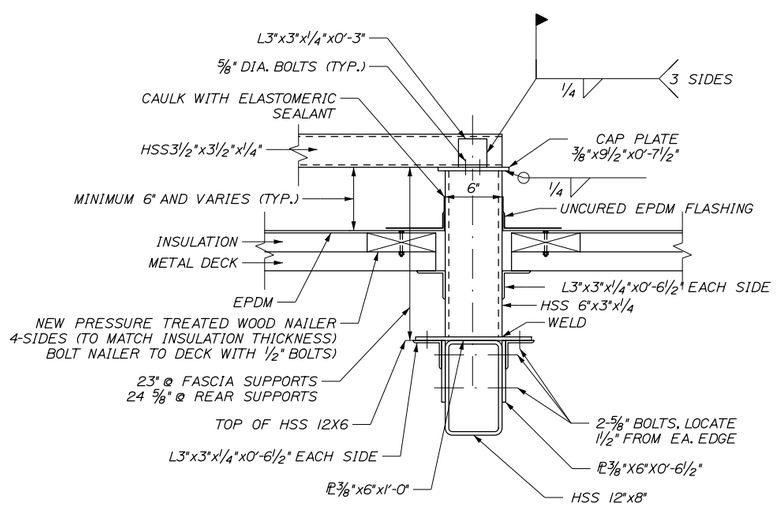

CANOPY MOUNTED INTERIOR SIGN COLUMN
1 1/2" = 1'-0"

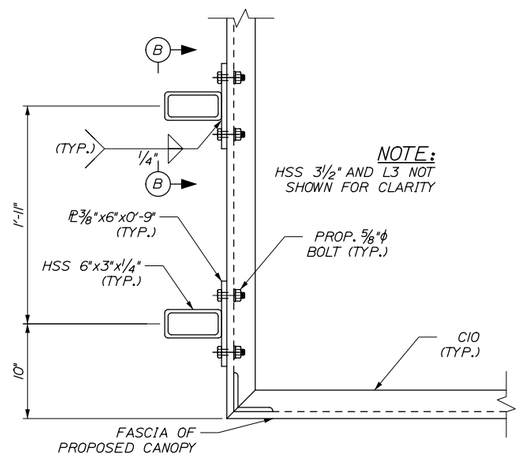

PLAN VIEW
1 1/2" = 1'-0"

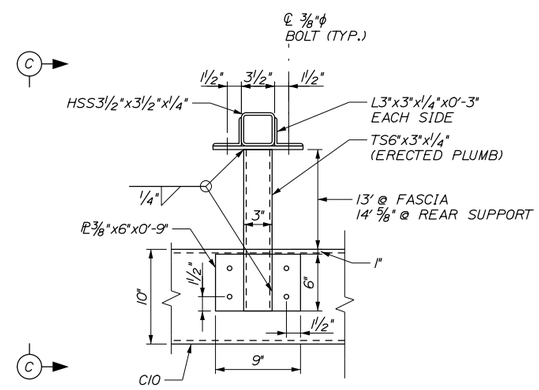

SECTION B-B

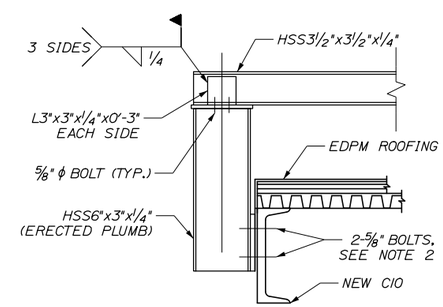

SECTION C-C

CANOPY MOUNTED EXTERIOR SIGN COLUMN
1 1/2" = 1'-0"

Date:5/15/2015

Filename: 117_CanopySigns.dgn

Scale:			
No.	Revision	By	Date

Designed by:

HNTB

CONSULTANT PROJECT MANAGER: R. Bruce Munger, P.E.

	By	Date		By	Date
Designed	RBM	05/15	Checked	RBM	05/15
Drawn	MPC	05/15	In Charge of	RAL	05/15

HNTB CORPORATION
340 County Road, Suite 6-C
Westbrook, ME 04092
TEL (207) 774-5155
FAX (207) 228-0909

MAINE TURNPIKE

THE GOLD STAR MEMORIAL HIGHWAY

MTA PROJECT MANAGER: William Yates

FALMOUTH SPUR BARRIER TOLL PLAZA
ORT CONVERSION

CANOPY
SIGN SUPPORT DETAILS

SHEET NUMBER: S-28

CONTRACT:

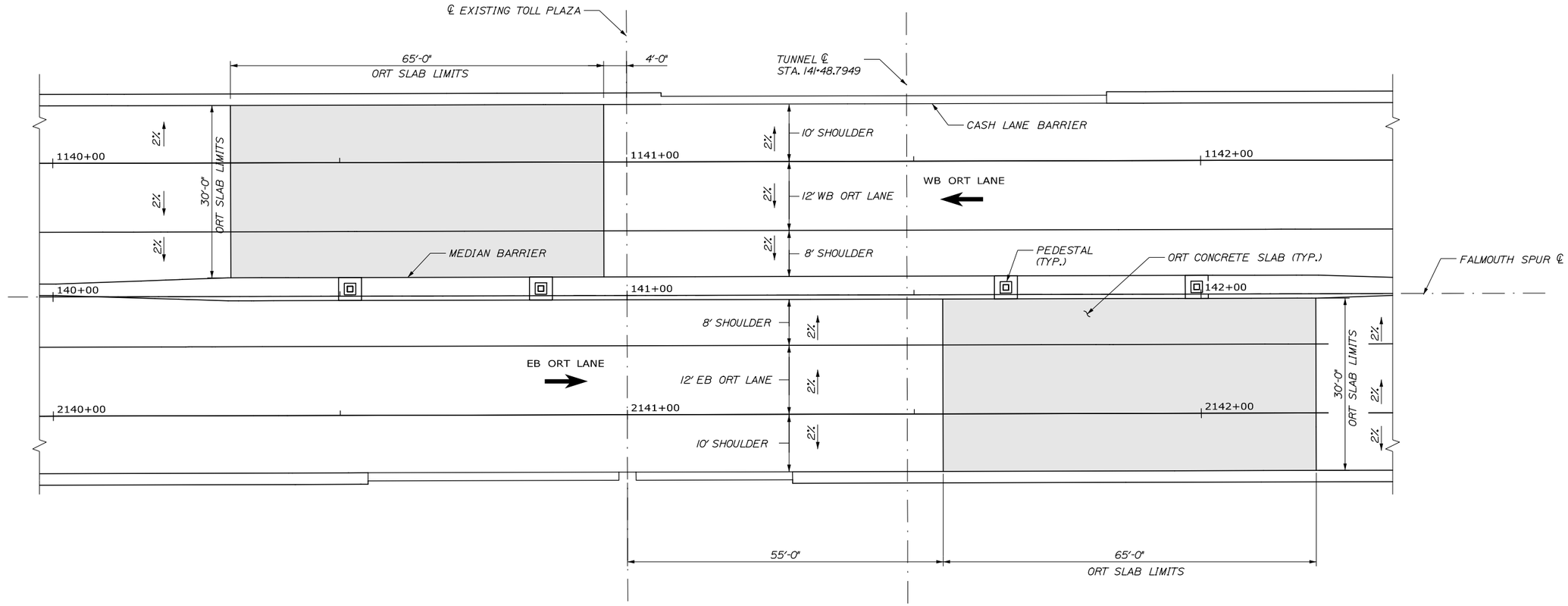

ORT SLAB PLAN
SCALE: 1" = 10'-0"

MARK	SIZE	NO.	LENGTH	TYPE	A	B	C	D	LOCATION AND REMARKS
ORT SLAB (GFRP)									
S601	6	480	33'-9"	STR					LONGITUDINAL
S602	6	520	29'-6"	119A	19'-9"	9'-9"	0'-4 5/8"		TRANSVERSE

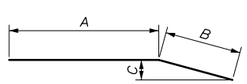

TYPE 119A

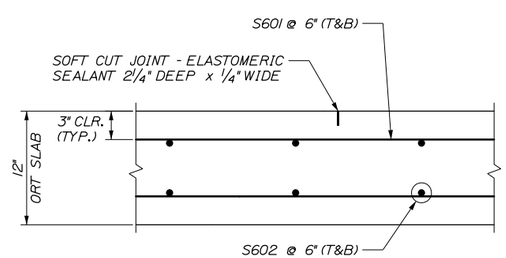

LONGITUDINAL SECTION

ORT SLAB NOTES:

1. THE CONTRACTOR SHALL CONSTRUCT TWO ORT SLABS, ONE IN EACH DIRECTION WESTBOUND AND EASTBOUND, AS SHOWN ON THE PLANS. EACH SLAB WILL HAVE A CROWN LINE BETWEEN THE TRAVEL LANE AND THE MAJOR SHOULDER AS PER THE SLOPES SHOWN ON THE PLANS. THE PROPOSED APPROACH AND DEPARTURE MINOR SHOULDER PAVEMENT SHALL BE WARPED TO MATCH THE ORT SLAB MINOR SHOULDER SLOPES. NO SHOULDER BREAK SHALL BE CONSTRUCTED ON THE ORT SLAB BETWEEN THE TRAVEL LANES AND THE MINOR SHOULDERS.
2. EACH ORT SLAB SHALL BE PLACED IN ONE CONTINUOUS PLACEMENT. CONSTRUCTION JOINTS ARE NOT ALLOWED. SOFT CUT JOINTS SHALL BE CONSTRUCTED AT APPROXIMATE 10-FT SPACING, AS DIRECTED BY THE RESIDENT.
3. FINISHING OF ORT SLABS SHALL ADHERE TO WEARING SURFACE TOLERANCES PER 502 SPECIAL PROVISION (502.14).
4. CONCRETE FOR ORT SLABS SHALL BE CLASS AAA DECK WITH 5LBS/CY OF SYNTHETIC FIBER REINFORCING.
5. ORT SLAB SHALL HAVE A BROOMED FINISH.
6. ALL REINFORCING BAR SHALL BE GFRP.
7. ALL REINFORCING BAR SUPPORTS AND TIES SHALL BE NON-METALLIC.
8. FENCE ATOP MEDIAN BARRIER NOT SHOWN FOR CLARITY.

Date:5/15/2015

Filename: 118_S_ORTSlabPlan.dgn

Scale:

No.	Revision	By	Date

Designed by:

HNTB

CONSULTANT PROJECT MANAGER: R. Bruce Munger, P.E.

	By	Date		By	Date
Designed	AMF	05/15	Checked	CRM	05/15
Drawn	CNP	05/15	In Charge of	RAL	05/15

HNTB CORPORATION
340 County Road, Suite 6-C
Westbrook, ME 04092
TEL (207) 774-5155
FAX (207) 228-0909

MAINE TURNPIKE

THE GOLD STAR MEMORIAL HIGHWAY

MTA PROJECT MANAGER: William Yates

FALMOUTH SPUR TOLL PLAZA
ORT CONVERSION

ORT SLAB
PLAN

SHEET NUMBER: S-29

CONTRACT:2015.13

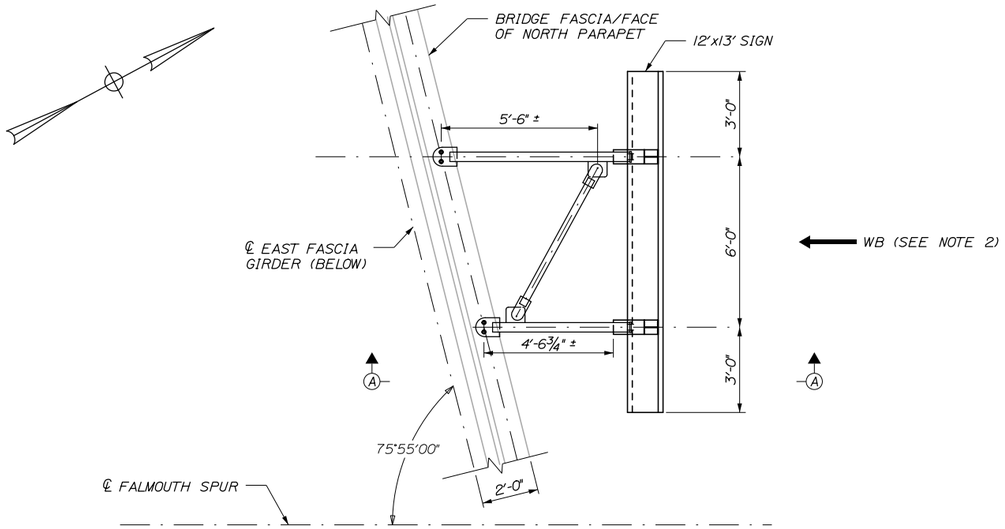

PLAN - TOP CHORD BRACING

(BOTTOM CHORD LATERAL BRACING SIMILAR)
⅜" = 1'-0"

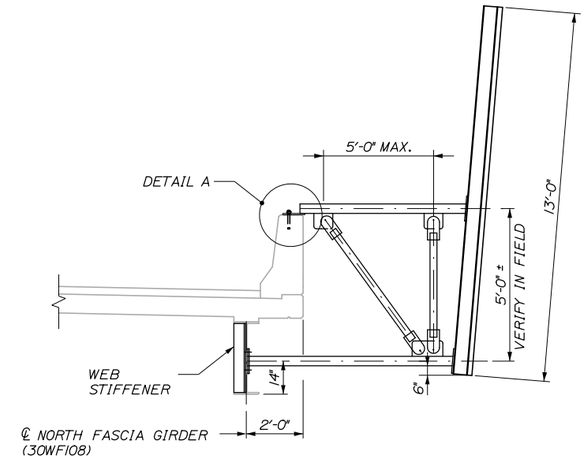

SECTION A-A

N.T.S.

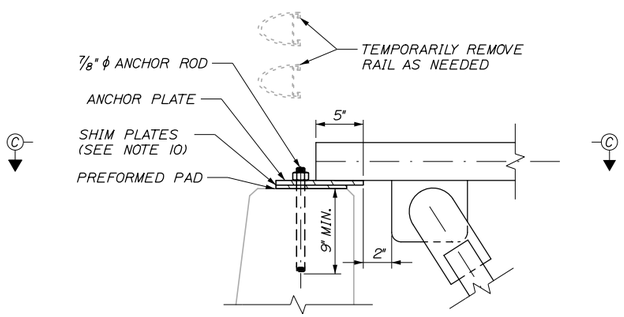

DETAIL A

1½" = 1'-0"

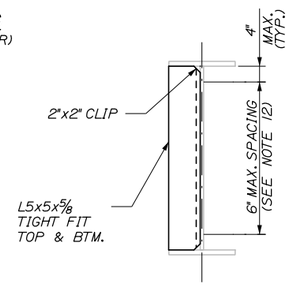

GIRDER SECTION

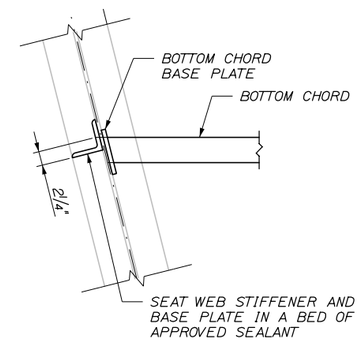

GIRDER PLAN

WEB STIFFENER DETAIL

1" = 1'

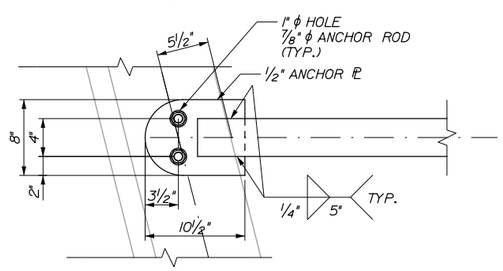

SECTION C-C

(ANCHOR ℙ SHOWN, SHIM ℙ SHALL BE SIMILAR)
1½" = 1'-0"

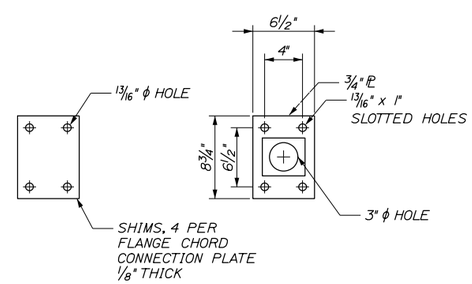

BOTTOM CHORD BASE PLATE DETAIL

(USE IN PLACE OF BASE PLATE DETAIL IN STANDARD DETAILS, SHEET 645(16))
1½" = 1'-0"

NOTES:

1. EXISTING ALUMINUM BRIDGE RAILING NOT SHOWN FOR CLARITY. IF ANY CONFLICTS WITH BRIDGE RAILING POSTS OCCUR THE CONTRACTOR MAY SHIFT THE LOCATION OF THE SIGNS ±1'-0" TO AVOID THE CONFLICT.
2. FOUR SIGN SUPPORTS SHALL BE FABRICATED AND INSTALLED ON THE FALMOUTH ROAD BRIDGE BASED ON THE DETAILS PRESENTED AND THE MAINEDOT STANDARD DETAILS. SEE SHEET SS-02 FOR SPECIFIC SIGN INFORMATION AND PLACEMENT ON THE BRIDGE. TWO SIGNS SHALL BE CENTERED OVER THE WESTBOUND TRAVEL LANES AND TWO SHALL BE CENTERED OVER THE EASTBOUND TRAVEL LANES.
3. FOR DETAILS NOT SHOWN SEE MAINEDOT STANDARD DETAILS 645(12) THROUGH 645(17) AND 645(20). FOR ADDITIONAL NOTES SEE MAINEDOT STANDARD DETAILS 645(22) AND 645(23).
4. ALL ANCHOR RODS SHALL BE ⅞" DIAMETER ASTM F1554, GR 55. ANCHOR RODS AND RELATED HARDWARE SHALL BE HOT DIP GALVANIZED AFTER FABRICATION
5. ALL ANCHOR RODS SHALL BE ANCHORED IN PLACE USING A MATERIAL LISTED ON THE MAINEDOT QUALIFIED PRODUCTS LIST OF CONCRETE ADHESIVE ANCHOR SYSTEMS. CEMENTITIOUS ANCHORING MATERIALS ARE NOT PERMITTED. EMBEDMENT LENGTH SHALL BE SUFFICIENT TO DEVELOP THE TENSILE YIELD STRENGTH OF THE ANCHOR ROD.
6. ALL STEEL PLATES SHALL BE A MINIMUM OF 5/16" THICK AND SHALL MEET THE REQUIREMENTS OF ASTM A572, GRADE 50. UNLESS OTHERWISE NOTED.
7. HOLLOW STEEL SECTIONS SHALL BE A MINIMUM OF 5/16" THICK AND SHALL MEET THE REQUIREMENTS OF ASTM A500, GRADE B.
8. ALL SIGN SUPPORT COMPONENTS SHALL BE HOT DIP GALVANIZED AFTER FABRICATION.
9. HOLES THAT ARE FIELD DRILLED THROUGH GALVANIZED COMPONENTS SHALL HAVE AREAS OF DAMAGED GALVANIZED COATING REPAIRED IN ACCORDANCE WITH ASTM A780.
10. THE CONTRACTOR SHALL FURNISH SHIM PLATES FOR USE AT THE TOP OF PARAPET CONNECTIONS AND BOTTOM CHORD BASE PLATE AS REQUIRED. APPROXIMATELY FOUR ⅛" THICK SHIM PLATES AT EACH LOCATION IS SUGGESTED.
11. FOLLOWING INSTALLATION THE ANNULAR SPACE BETWEEN THE ANCHOR RODS, SHIM PLATES AND ANCHOR PLATES SHALL BE COMPLETELY FILLED USING A MATERIAL SELECTED FROM THE MAINEDOT QUALIFIED PRODUCTS LIST OF CHEMICAL ANCHORING MATERIALS. THIS WORK SHALL BE DONE PRIOR TO INSTALLING THE NUTS AND WASHERS FOR THE ANCHOR RODS AND SHALL BE INCIDENTAL TO THE RELATED CONTRACT ITEM.
12. HOLES FOR CONNECTING WEB STIFFENER TO GIRDER WEB SHALL BE FIELD LOCATED AND DRILLED ONCE THE LOCATION OF THE BOTTOM CHORD CONNECTION PLATE BOLTS HAVE BEEN ESTABLISHED. THE PROPOSED HOLE LOCATION AND SPACING SHALL BE VERIFIED BY THE RESIDENT PRIOR TO DRILLING.
13. ANCHORING EYELETS AS SHOWN IN THE STANDARD DETAILS ARE NOT REQUIRED.

Scale:

No.	Revision	By	Date

Designed by:

HNTB

CONSULTANT PROJECT MANAGER: R. Bruce Munger, P.E.

	By	Date		By	Date
Designed	AJF	05/15	Checked	KEB	05/15
Drawn	AJF	05/15	In Charge of	RAL	05/15

HNTB CORPORATION
340 County Road, Suite 6-C
Westbrook, ME 04092
TEL (207) 774-5155
FAX (207) 228-0909

MAINE TURNPIKE

THE GOLD STAR MEMORIAL HIGHWAY

MTA PROJECT MANAGER: William Yates

FALMOUTH SPUR TOLL PLAZA
ORT CONVERSION
FALMOUTH ROAD
BRIDGE MOUNTED SIGN SUPPORT

SHEET NUMBER: S-30

CONTRACT: 2015.13

Date: 5/15/2015
Filename: 119_BridgeMountedSignSupport.dgn

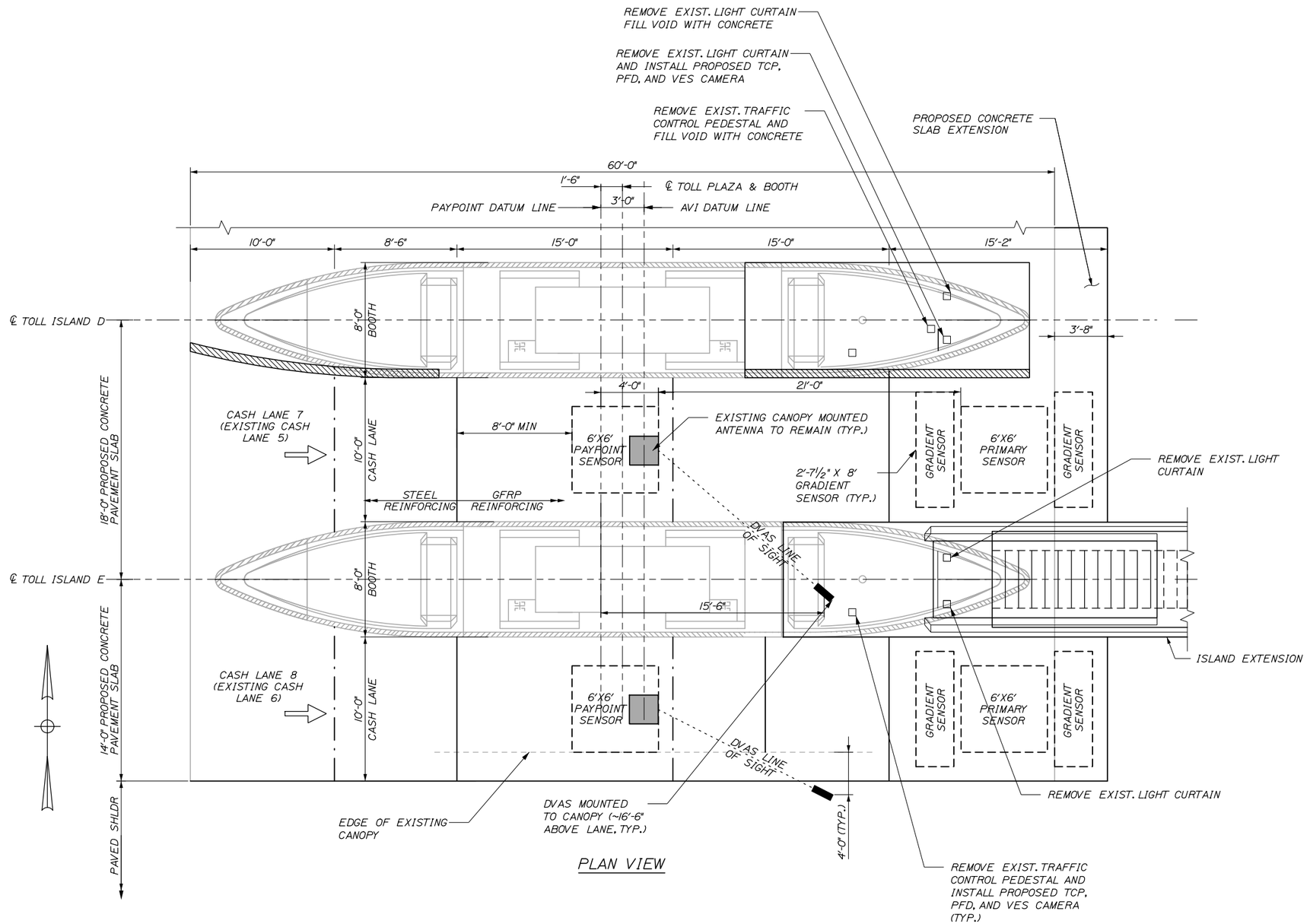

PLAN VIEW

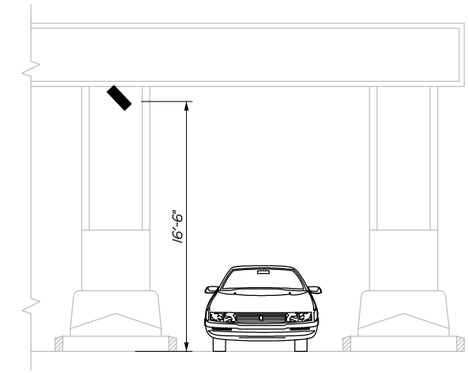

SECTION VIEW

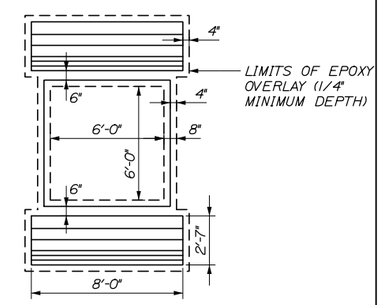

LOOP DETAIL AND EPOXY OVERLAY

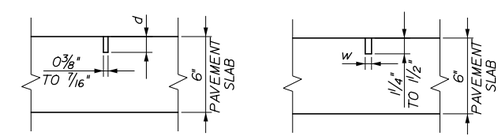

d = 1¼" TO 1½" FOR SINGLE LEAD CUT
2½" FOR MULTIPLE LEAD CUT

LEAD-IN CUT
SCALE: 2" = 1'

SENSOR CUT
SCALE: 2" = 1'

w = ½" FOR GRADIENT ENDS
⅜" FOR ALL OTHER CUTS

NOTES:

1. TRANSCORE SHALL INJECT LOCTITE EPOXY INTO SAW CUT BEFORE INSTALLING SENSORS AND LEADS. TRANSCORE SHALL PROVIDE EQUIPMENT, TEMPLATES AND EPOXY. SEE SPECIAL PROVISIONS SECTION 655 FOR MORE INFORMATION.

2. ALL LAYOUT FOR PRIMARY AND GRADIENT SENSORS SHALL BE VERIFIED BY TRANSCORE PRIOR TO CUTTING CONCRETE.

3. ¼" MINIMUM DEPRESSION FOR EPOXY OVERLAY SHALL BE COMPLETED PRIOR TO SAW CUTTING CONCRETE FOR LOOPS.

4. MEASUREMENT FOR ITEM 515.23 EPOXY OVERLAY SHALL BE 10 SY PER LANE.

5. LOOP LAYOUT IS TYPICAL FOR ALL ENTRY LANES.

6. DVAS MOUNTING HARDWARE AND INSTALLATION IS INCIDENTAL TO ITEM 655.02 DVAS MOUNT INSTALLATION.

Date:5/15/2015

Filename: 120_CashLaneRehabSensorLayout.dgn

Scale:

No.	Revision	By	Date

Designed by:

HNTB

CONSULTANT PROJECT MANAGER: R. Bruce Munger, P.E.

	By	Date		By	Date
Designed	RBM	05/15	Checked	RBM	05/15
Drawn	---	05/15	In Charge of	RAL	05/15

HNTB CORPORATION
340 County Road, Suite 6-C
Westbrook, ME 04092
TEL (207) 774-5155
FAX (207) 228-0909

MAINE TURNPIKE

THE GOLD STAR MEMORIAL HIGHWAY

MTA PROJECT MANAGER: William Yates

FALMOUTH SPUR TOLL PLAZA
ORT CONVERSION

CASH LANE REHAB
TYPICAL SENSOR LAYOUT

SHEET NUMBER: E-01

CONTRACT:2015.13

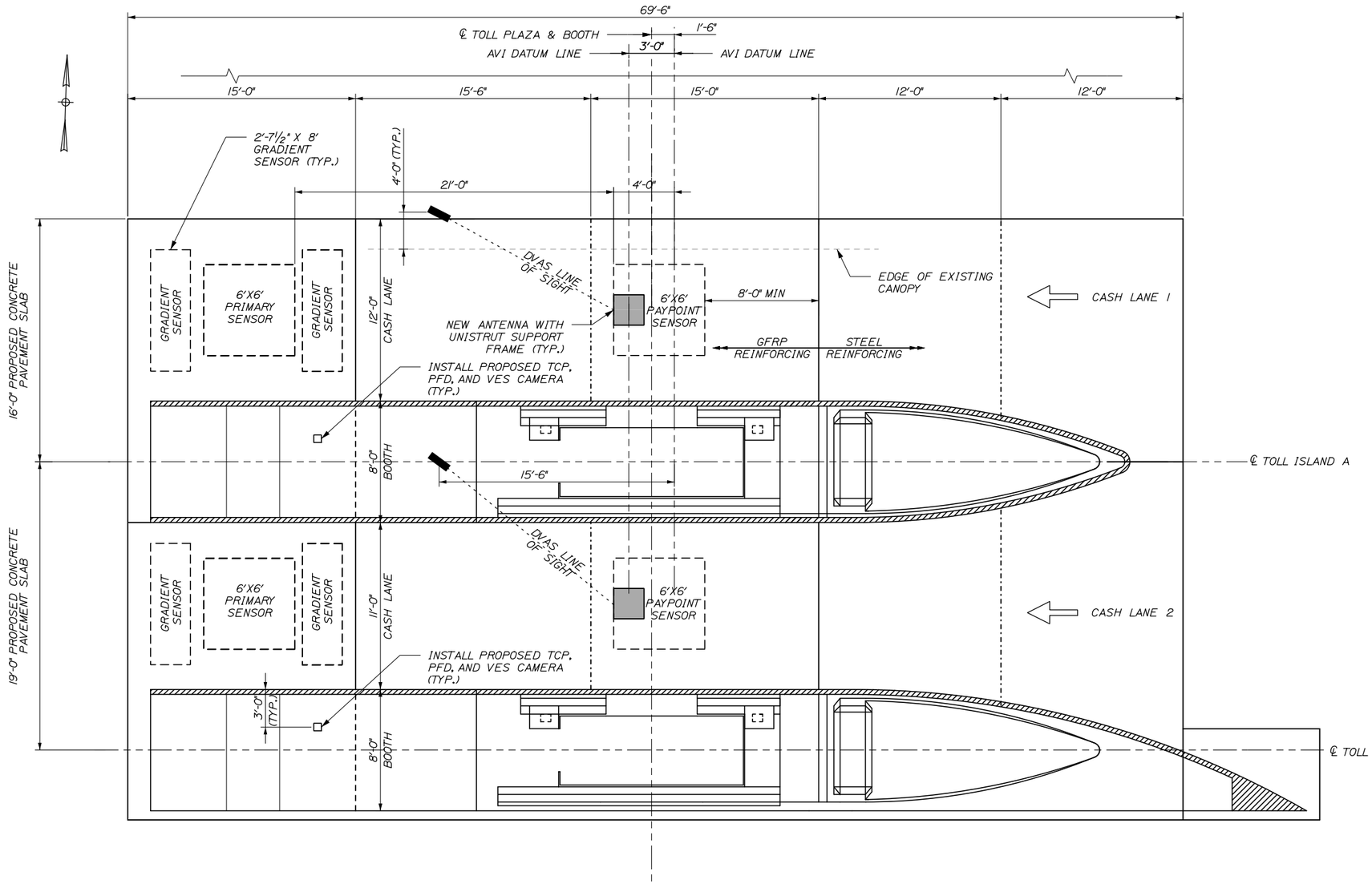

PLAN VIEW

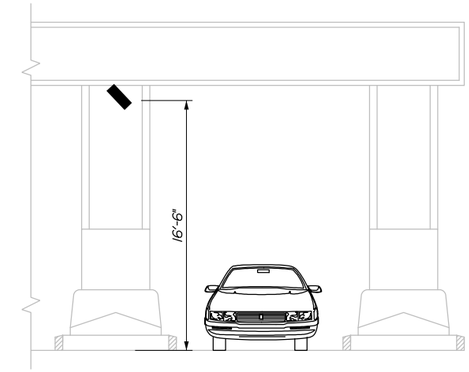

SECTION VIEW

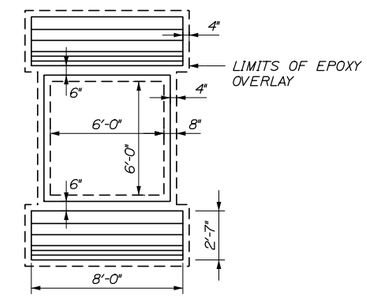

LOOP DETAIL AND EPOXY OVERLAY

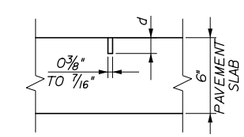

d = 1¼" TO 1½" FOR SINGLE LEAD CUT
2½" FOR MULTIPLE LEAD CUT

LEAD-IN CUT

SCALE: 2" = 1'

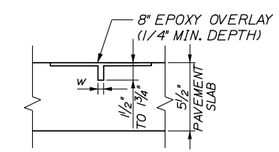

SENSOR CUT

SCALE: 2" = 1'

w = ½" FOR GRADIENT ENDS
⅜" FOR ALL OTHER CUTS

NOTES:

1. TRANSCORE SHALL INJECT LOCTITE EPOXY INTO SAW CUT BEFORE INSTALLING SENSORS AND LEADS. TRANSCORE SHALL PROVIDE EQUIPMENT, TEMPLATES AND EPOXY. SEE SPECIAL PROVISIONS SECTION 655 FOR MORE INFORMATION.

2. ALL LAYOUT FOR PRIMARY AND GRADIENT SENSORS SHALL BE VERIFIED BY TRANSCORE PRIOR TO CUTTING CONCRETE.

3. ¼" DEPRESSION FOR EPOXY OVERLAY SHALL BE COMPLETED PRIOR TO SAW CUTTING CONCRETE FOR LOOPS.

4. MEASUREMENT FOR ITEM 515.23 EPOXY OVERLAY SHALL BE 10 SY PER LANE.

5. LOOP LAYOUT IS TYPICAL FOR ALL ENTRY LANES.

6. DVAS MOUNTING HARDWARE AND INSTALLATION IS INCIDENTAL TO ITEM 655.02 DVAS MOUNT INSTALLATION.

Date:5/15/2015

Filename: 121_PropCashLaneSensorLayout.dgn

Scale:

No.	Revision	By	Date

Designed by:

HNTB

CONSULTANT PROJECT MANAGER: R. Bruce Munger, P.E.

	By	Date		By	Date
Designed	RBM	05/15	Checked	RBM	05/15
Drawn	---	05/15	In Charge of	RAL	05/15

HNTB CORPORATION
340 County Road, Suite 6-C
Westbrook, ME 04092
TEL (207) 774-5155
FAX (207) 228-0909

MAINE TURNPIKE

THE GOLD STAR MEMORIAL HIGHWAY

MTA PROJECT MANAGER: William Yates

FALMOUTH SPUR TOLL PLAZA
ORT CONVERSION

PROPOSED CASH LANE
TYPICAL SENSOR LAYOUT

SHEET NUMBER: E-02

CONTRACT:2015.13

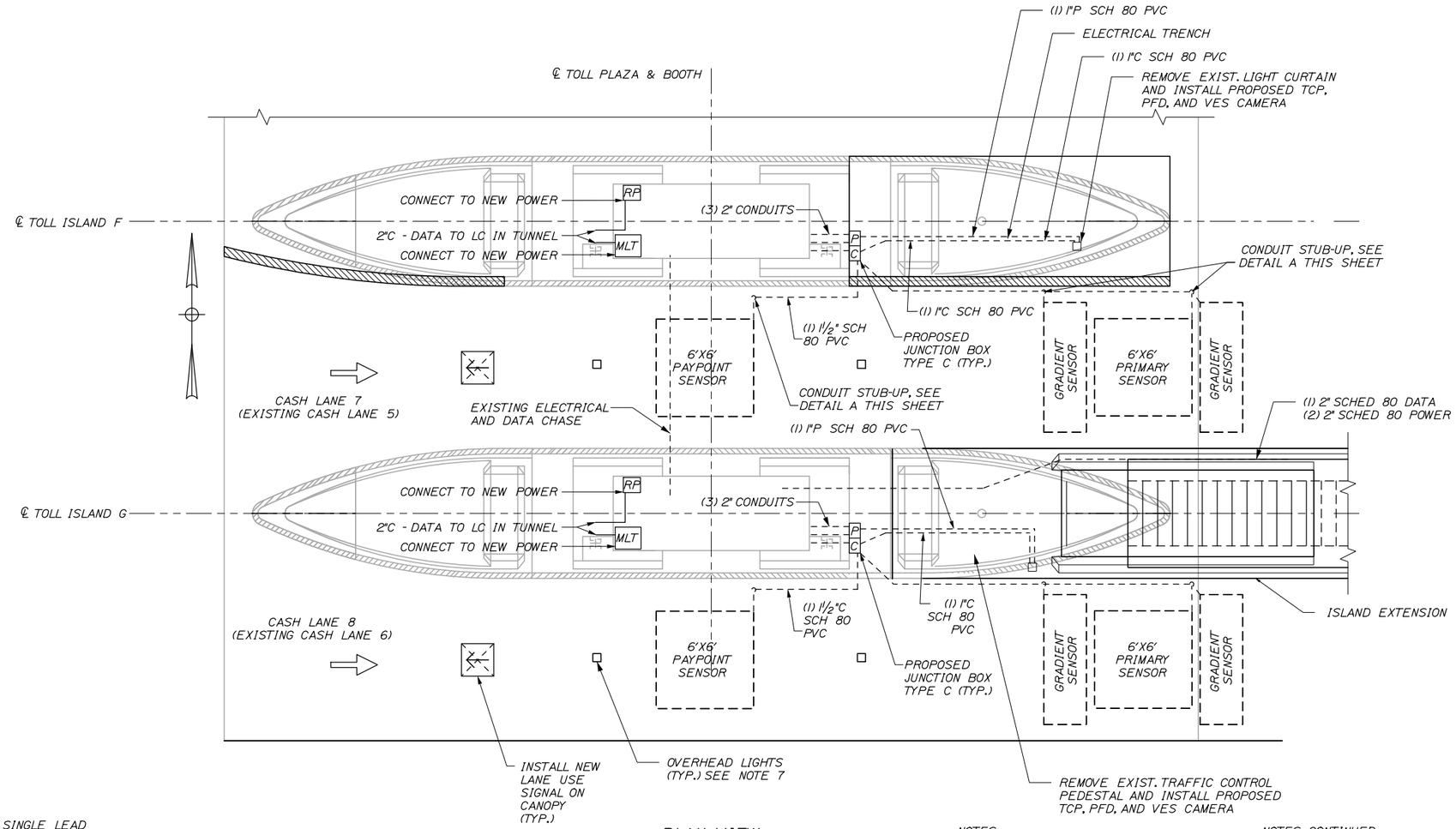

PLAN VIEW

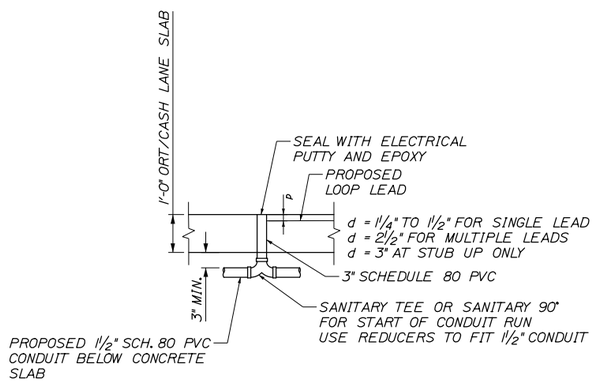

DETAIL A
STUB UP IN CASH LANE SLAB
SECTION VIEW

NOTE: SEALING STUB-UPS SHALL BE INCIDENTAL TO THE PVC PAY ITEM.

NOTES:

1. SEE GENERAL NOTES FOR ITEMS TO BE SUPPLIED BY MTA, TRANSCORE AND CONTRACTOR. SEE GENERAL NOTES FOR ITEMS TO BE SALVAGED.

2. SENSOR LOOP LOCATIONS ARE APPROXIMATE. SEE SHEET E-01 FOR EXACT LOOP LOCATION.

3. CONTRACTOR SHALL CONCEAL CONDUITS IN EXISTING CONCRETE.

4. THE TRAFFIC CONTROL PEDESTAL BASE SHALL BE LOCATED AT LEAST 36" FROM THE CURB.

5. FIELD MODIFY EXISTING POWER AND CONTROL WIRING AS REQUIRED.

NOTES CONTINUED:

6. ELECTRICAL/DATA CONDUIT LAYOUT IN BOOTH PIT TO BE SUBMITTED BY CONTRACTOR AS PER SPECIAL PROVISION 655.

7. FOR OVERHEAD LANE LIGHTS SEE SPECIFICATION 655. FEED WITH 1" RMC. LIGHTS ARE SURFACE MOUNTED TO STRUCTURAL STEEL.

Date:5/15/2015

Filename: 122_ElecPlan1.dgn

Scale:

No.	Revision	By	Date

Designed by:

HNTB

CONSULTANT PROJECT MANAGER: R. Bruce Munger, P.E.

	By	Date		By	Date
Designed	RBM	05/15	Checked	RBM	05/15
Drawn	---	05/15	In Charge of	RAL	05/15

HNTB CORPORATION
340 County Road, Suite 6-C
Westbrook, ME 04092
TEL (207) 774-5155
FAX (207) 228-0909

MAINE TURNPIKE

THE GOLD STAR MEMORIAL HIGHWAY

MTA PROJECT MANAGER: William Yates

FALMOUTH SPUR TOLL PLAZA
ORT CONVERSION

ELECTRICAL PLAN - REHAB CASH LANES

SHEET NUMBER: E-03

CONTRACT:2015.13

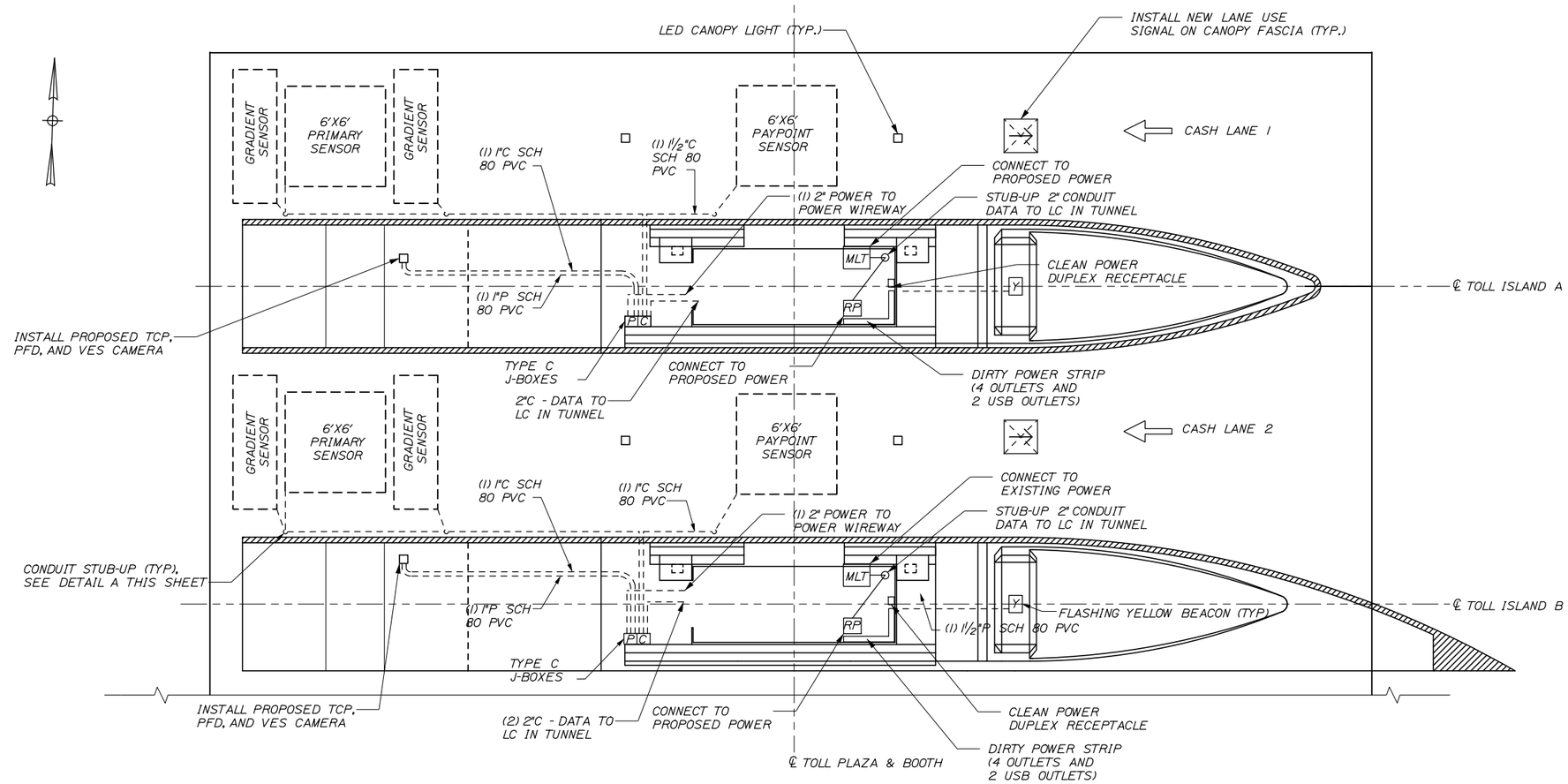

PLAN VIEW

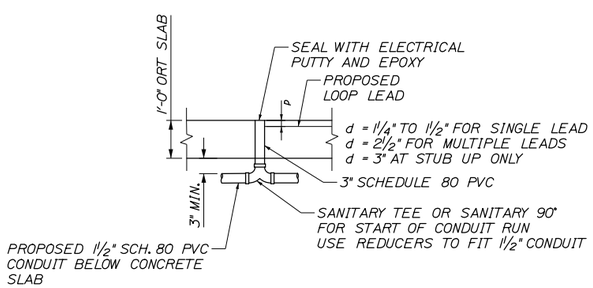

DETAIL A
STUB UP IN CASH LANE SLAB
SECTION VIEW

NOTE: SEALING STUB-UPS SHALL BE INCIDENTAL TO THE PVC PAY ITEM.

NOTES:

1. SEE GENERAL NOTES FOR ITEMS TO BE SUPPLIED BY MTA, TRANSCORE AND CONTRACTOR. SEE GENERAL NOTES FOR ITEMS TO BE SALVAGED.

2. SENSOR LOOP LOCATIONS ARE APPROXIMATE. SEE SHEET E-02 FOR EXACT LOOP LOCATION.

3. THE TRAFFIC CONTROL PEDESTAL SHALL BE LOCATED AT LEAST 36" FROM THE CURB.

4. KLIK-ITS (POWER & TEL ENTERPRISE PART # C8820) OR APPROVED EQUIVALENT SHALL BE USED AT ALL LOOPWIRE SPLICE LOCATIONS.

5. FOR OVERHEAD LANE LIGHTS SEE SPECIFICATION 655. FEED WITH 1" RMC. LIGHTS ARE SURFACE MOUNTED TO STRUCTURAL STEEL.

Date:5/15/2015

Filename: 123_Prop ElecPlan1.dgn

Scale:

No.	Revision	By	Date

Designed by: HNTB

CONSULTANT PROJECT MANAGER: R. Bruce Munger, P.E.

	By	Date		By	Date
Designed	RBM	05/15	Checked	RBM	05/15
Drawn	---	05/15	In Charge of	RAL	05/15

HNTB CORPORATION
340 County Road, Suite 6-C
Westbrook, ME 04092
TEL (207) 774-5155
FAX (207) 228-0909

MAINE TURNPIKE

THE GOLD STAR MEMORIAL HIGHWAY

MTA PROJECT MANAGER: William Yates

FALMOUTH SPUR TOLL PLAZA
ORT CONVERSION

ELECTRICAL PLAN - PROP CASH LANE

SHEET NUMBER: E-04

CONTRACT:2015.13

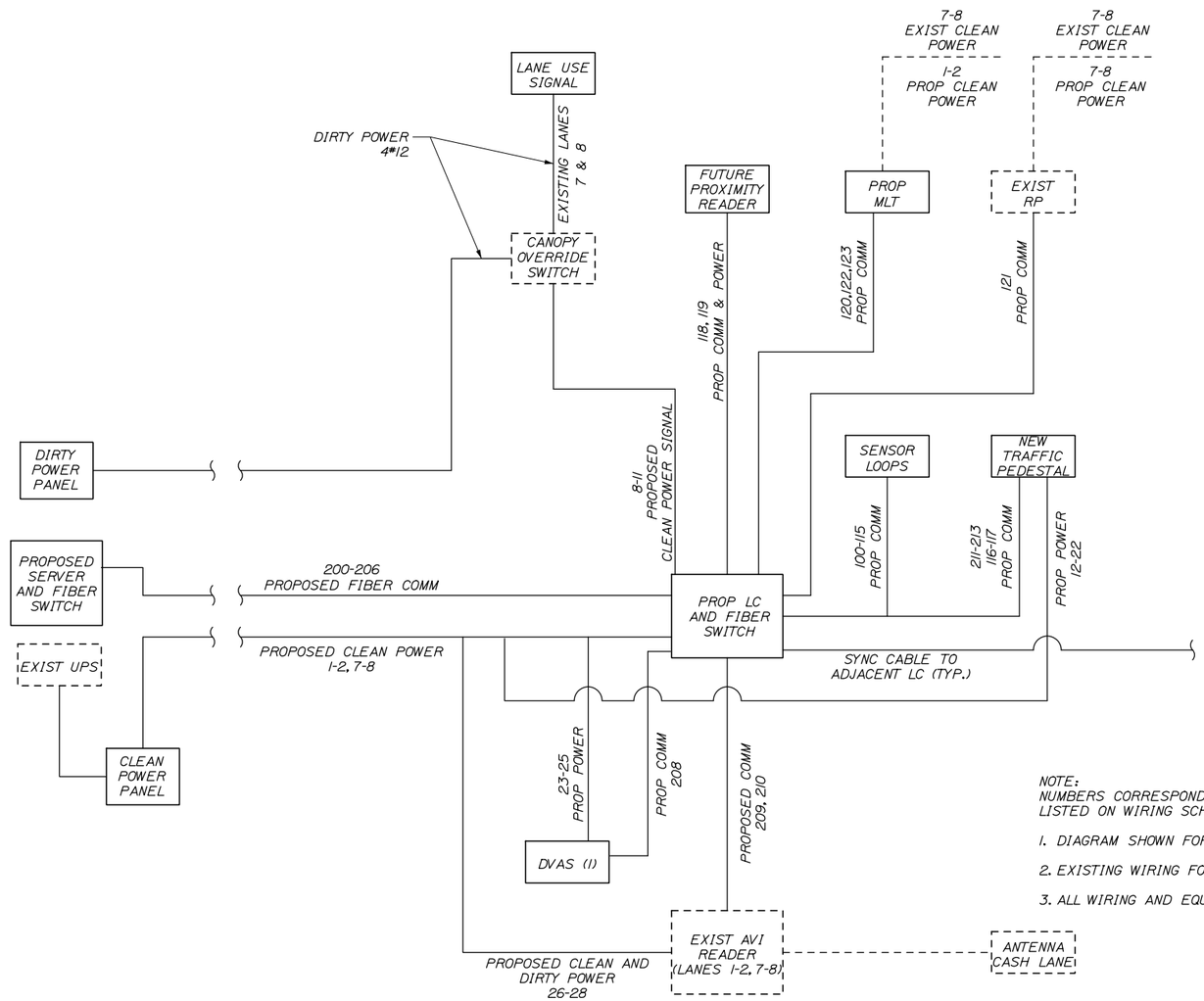

NOTE:
NUMBERS CORRESPOND TO NUMBERS LISTED ON WIRING SCHEDULES.

1. DIAGRAM SHOWN FOR LANES 1, 2, 7 AND 8
2. EXISTING WIRING FOR LANES 7 AND 8 SHALL BE REUSED AS SHOWN.
3. ALL WIRING AND EQUIPMENT FOR LANES 1 AND 2 SHALL BE PROPOSED.

LEGEND

PROPOSED	EXISTING	
▭	▭	EQUIPMENT
———	- - - - - -	WIRING

TOLLING EQUIPMENT SYSTEMS DIAGRAM

SCALE: NTS

Date: 5/15/2015

Filename: 124_WiringDiagram.dgn

Scale:

No.	Revision	By	Date

Designed by:

HNTB

CONSULTANT PROJECT MANAGER: R. Bruce Munger, P.E.

	By	Date		By	Date
Designed	RBM	05/15	Checked	RBM	05/15
Drawn	---	05/15	In Charge of	RAL	05/15

HNTB CORPORATION
340 County Road, Suite 6-C
Westbrook, ME 04092
TEL (207) 774-5155
FAX (207) 228-0909

MAINE TURNPIKE

THE GOLD STAR MEMORIAL HIGHWAY

MTA PROJECT MANAGER: William Yates

FALMOUTH SPUR TOLL PLAZA
ORT CONVERSION

CASH LANE POWER & COMMUNICATIONS LINE DIAGRAM

SHEET NUMBER: E-05

CONTRACT: 2015.13

CASH LANE POWER

WIRING SHOWN IS FOR TYPICAL CASH LANE. REPLICATE FOR SIMILAR LANES.
ATT/ETC LANE TYPE POWER WIRING SCHEDULE

	WIRE LABEL (SOURCE.CIRCUIT.DESTINATION)	DESCRIPTION	AWG	COLOR	CORE	JACKET	VOLTAGE	CIRCUIT BREAKER	FROM	TO	LANE SERVER TERMINAL #	TERMINATION REQUIREMENTS	TERMINATIONS	STATUS
	BOOTH QUAD OUTLET													
1	(LANE CONTROLLER) .L.BQUAD	PERIPHERAL POWER (HOT, NON-SWITCHED)	12	BLACK OR PER LOCAL CODE	STRANDED	THHW	120 VAC	20	EXISTING UPS	BOOTH QUAD OUTLET LOCATE WITHIN 3 FT OF ATTENDANT WORK AREA	N/A	INSTALL QUAD OUTLET	TUNNEL/POWER PANEL	NEW
2	(LANE CONTROLLER) .N.BQUAD	PERIPHERAL POWER (NEUTRAL)		WHITE									TUNNEL/POWER PANEL	NEW
3	(LANE CONTROLLER) .G.BQUAD	PERIPHERAL POWER (GROUND)		GREEN									TUNNEL/POWER PANEL	NEW
	LANE SERVER													
4	(LANE CONTROLLER).LS.T1-1	LANE SERVER POWER (HOT, NON-SWITCHED)	12	BLACK OR PER LOCAL CODE	STRANDED	THHW	120 VAC	20	BOOTH or MAIN POWER DISTRIBUTION PANEL and ISOLATED GROUND BAR	LANE SERVER FIELD WIRING (T1) TERMINAL BLOCK	T1-1	BARE WIRE (Capped and Taped for termination by UTS)	TUNNEL/POWER PANEL	NEW
5	(LANE CONTOLLER) .N.LS.T1-2	LANE SERVER POWER (NEUTRAL)		WHITE							T1-2		TUNNEL/POWER PANEL	NEW
6	(LANE CONTROLLER) .LS.T1-3	LANE SERVER POWER (GROUND)		GREEN							T1-4		TUNNEL/POWER PANEL	NEW
7	(LANE CONTROLLER)IG.LS.T1-4	LANE SERVER POWER (ISOLATED GROUND)		GREEN W/ WHITE STRIPE							T1-3		TUNNEL/POWER PANEL	NEW
	CANOPY TRAFFIC SIGNAL													
8	COS.CTS-R.SIG	RED CANOPY TRAFFIC SIGNAL POWER (HOT, SWITCHED)	12	RED	STRANDED	THHW	120 VAC	N/A	PROPOSED LANE CONTROLLER (T1) TERMINAL BLOCK	CANOPY OVERRIDE SWITCH (See Note #4)	T1-9	BARE WIRE	TUNNEL/POWER PANEL	NEW
9	COS.CTS-G.SIG	GREEN CANOPY TRAFFIC SIGNAL POWER (HOT, SWITCHED)		BLUE							T1-10		TUNNEL/POWER PANEL	NEW
10	COS.CTS-N.SIG	CANOPY TRAFFIC SIGNAL POWER (NEUTRAL)		WHITE							T1-11		TUNNEL/POWER PANEL	NEW
11	COS.CTS-CG.SIG	CANOPY TRAFFIC SIGNAL POWER (COMMON GROUND)		GREEN							T1-8		TUNNEL/POWER PANEL	NEW
	TRAFFIC CONTROL PEDESTAL (TCP)													
12	ITS.LS.T1-12	VIOLATION BEACON (HOT)	12	BLACK	STRANDED	THHW	120 VAC	-	PROPOSED LANE CONTROLLER (T1) TERMINAL BLOCK	TRAFFIC CONTROL PEDESTAL FIELD WIRING TERMINAL BLOCK 'TA'	T1-12	TA - TH BLACK	TUNNEL/POWER PANEL	NEW
13	ITS.LS.T1-13	LANE 1 ISLAND TRAFFIC SIGNAL RED LIGHT POWER (HOT, SWITCHED)		RED							T1-13	TA - TH RED	TUNNEL/POWER PANEL	NEW
14	ITS.LS.T1-14	LANE 1 ISLAND TRAFFIC SIGNAL AMBER LIGHT POWER (HOT, SWITCHED)		YELLOW							T1-14	TA - TH AMBER	TUNNEL/POWER PANEL	NEW
15	ITS.LS.T1-15	LANE 1 ISLAND TRAFFIC SIGNAL GREEN LIGHT POWER (HOT, SWITCHED)		BLUE							T1-15	TA - TH BLUE	TUNNEL/POWER PANEL	NEW
16	ITS.LS.T1-16	LANE 1 ISLAND TRAFFIC SIGNAL POWER (NEUTRAL)		WHITE							T1-16	TA - TH (N)	TUNNEL/POWER PANEL	NEW
17	PTD.LS.T1-6	LANE 1 PATRON TOLL DISPLAY POWER (HOT, NON-SWITCHED)	12	BLACK	STRANDED	THHW	120 VAC	-	PROPOSED LANE CONTROLLER (T1) TERMINAL BLOCK	TRAFFIC CONTROL PEDESTAL FIELD WIRING TERMINAL BLOCK 'TA'	T1-6	TA - PTD (H)	TUNNEL/POWER PANEL	NEW
18	PTD.LS.T1-7	LANE 1 PATRON TOLL DISPLAY POWER (NEUTRAL)		WHITE							T1-7	TA - PTD (N)	TUNNEL/POWER PANEL	NEW
19	PTD.LS.T1-8	LANE 1 PATRON TOLL DISPLAY POWER (GROUND)		GREEN							T1-8	TA - PTD / VIOL (G)	TUNNEL/POWER PANEL	NEW
20	(Primary Power Panel).TCP	VES/TCP POWER (HOT, NON-SWITCHED)	12	BLACK	STRANDED	THHW	120 VAC	-	EXISTING CLEAN POWER FEED	TRAFFIC CONTROL PEDESTAL FIELD WIRING TERMINAL BLOCK 'TB'	N/A	TB - 120V (H)	TUNNEL/POWER PANEL	NEW
21	(Primary Power Panel)N.TCP	VES/TCP POWER (NEUTRAL)		WHITE							N/A	TB - 120V (N)	TUNNEL/POWER PANEL	NEW
22	(Primary Power Panel)G.TCP	VES/TCP POWER (GROUND)		GREEN							N/A	TB - 120V (G)	TUNNEL/POWER PANEL	NEW
	LANE DIGITAL VIDEO AND AUDIT CAMERA (DVAS)													
23	(Primary Power Panel).PP	LANE DVAS PAYPOINT CAMERA ENCLOSURE POWER (HOT - NON-SWITCHED)	12	BLACK OR PER LOCAL CODE	STRANDED	THHW	120 VAC	N/A	EXISTING CLEAN POWER FEED	DVAS CAMERA ENCLOSURE FIELD WIRING POWER STRIP (UP TO 6 CAMERAS ON 1 CIRCUIT)	N/A	BARE WIRE (Capped and Taped for termination by UTS)	TUNNEL/POWER PANEL	NEW
24	(Primary Power Panel)N.PP	LANE DVAS PAYPOINT CAMERA ENCLOSURE POWER (NEUTRAL)		WHITE									TUNNEL/POWER PANEL	NEW
25	(Primary Power Panel)G.PP	LANE DVAS PAYPOINT CAMERA ENCLOSURE POWER (GROUND)		GREEN									TUNNEL/POWER PANEL	NEW
	AUTOMATIC VEHICLE IDENTIFICATION (AVI)													
26	(Primary Power Panel)L.AVI	LANE AVI READER QUAD POWER (AC HOT)	12	BLACK OR PER LOCAL CODE	STRANDED	THHW	120 VAC	20	EXISTING CLEAN POWER FEED	EXISTING AVI READER (LANES 6-10)	N/A	QUAD OUTLET	TUNNEL/POWER PANEL	NEW
27	(Primary Power Panel)N.AVI	LANE AVI READER QUAD POWER (AC NEUTRAL)		WHITE									TUNNEL/POWER PANEL	NEW
28	(Primary Power Panel) G.AVI	LANE AVI QUAD READER (GROUND)		GREEN									TUNNEL/POWER PANEL	NEW

GENERAL NOTES:

1) RF MODULE POWER CONNECTOR IS DEPENDENT ON EQUIPMENT TYPE. SEE SPECIFIC USER INSTALLATION MANUAL OR UTS CONSTRUCTION AND INSTALLATION GUIDE FOR TYPE
2) (In#) will have to be replaced with the lane number assigned according to construction plans.
3) (Booth Panel#) (Ckt #) will have to be replaced with the Panel ID and circuit/breaker number that this wire is connected to.
4) Canopy Override Switch - These are switched hot leads from the Lane Server clean power source fed through lane server switched terminals. When manually switching with dirty power, Line and Neutral leads must both be switched.

Date:5/15/2015

Filename: 125_Schedule1.dgn

Scale:

No.	Revision	By	Date

Designed by: HNTB

CONSULTANT PROJECT MANAGER: R. Bruce Munger, P.E.

	By	Date		By	Date
Designed	RBM	05/15	Checked	RBM	05/15
Drawn	---	05/15	In Charge of	RAL	05/15

HNTB CORPORATION
340 County Road, Suite 6-C
Westbrook, ME 04092
TEL (207) 774-5155
FAX (207) 228-0909

MAINE TURNPIKE

THE GOLD STAR MEMORIAL HIGHWAY

MTA PROJECT MANAGER: William Yates

FALMOUTH SPUR TOLL PLAZA
ORT CONVERSION

CASH LANE POWER SCHEDULE

SHEET NUMBER: E-06

CONTRACT:2015.13

Date:5/15/2015

WIRING SHOWN IS FOR CASH LANE. REPLICATE FOR SIMILAR LANES.

ATT/ETC DISCRETE WIRING SCHEDULE - DATA: DOOR WIRING LOGIC, SERIAL, VIDEO, AUDIO (Primary Server)

Intelligent Vehicle Identification System (IVIS) (For Wiring Only. Home Run Lead supplied as part of Sensor)

	WIRE LABEL	DESCRIPTION	AWG	COLOR	CORE	STANDARD	FROM	TO	LANE SERVER TERMINAL #	STATUS
100	T4-49.G1	NOT USED						SENSORS COME WITH 80' PIGTAIL. IF ADDITIONAL WIRE NEEDED SPLICE TO IMSA-50-2 TYPE CABLE. INSTALL THE HOME RUN CABLE FROM THE LANE GROUND BOX TO THE LANE SERVER CONNECTION SPECIFIED IN THE ADJ COLUMN. ALL SPLICES MUST BE SOLDERED, TIGHTLY TWISTED, AND INSULATED TO BE WATER RESISTANT. FOR LANES NOT HAVING PRE_CLASSIFICATION, DELETE REQUIREMENTS FOR PRE_CLASSIFICATION SENSORS AND INTELLIGENT QUEUING SENSOR	T4-49	
101	T4-50.G1								T4-50	
102	T4-51.P1	NOT USED							T4-51	
103	T4-52.P1								T4-52	
104	T4-53.G2	NOT USED							T4-53	
105	T4-54.G2								T4-54	
106	T4-55.IQ	NOT USED							T4-55	
107	T4-56.IQ								T4-56	
108	T4-57.PP	PAY POINT PRIMARY SENSOR	16	BLACK	STRANDED	IMSA50-2	PAY POINT PRIMARY SENSOR		T4-57	NEW
109	T4-58.PP								T4-58	NEW
110	T4-59.G3	POST CLASSIFICATION GRADIENT SENSOR #1	16	BLACK	STRANDED	IMSA50-2	POST-CLASSIFICATION GRADIENT SENSOR #1		T4-59	NEW
111	T4-60.G3								T4-60	NEW
112	T4-61.P4	POST CLASSIFICATION PRIMARY SENSOR	16	BLACK	STRANDED	IMSA50-2	POST-CLASSIFICATION PRIMARY SENSOR		T4-61	NEW
113	T4-62.P4								T4-62	NEW
114	T4-63.G4	POST CLASSIFICATION GRADIENT SENSOR #2	16	BLACK	STRANDED	IMSA50-2	POST-CLASSIFICATION GRADIENT SENSOR #2		T4-63	NEW
115	T4-64.G4								T4-64	NEW

Toll Booth Peripheral Cables (MLT, Printer, PC Prox, PTD Display)

116	S3.1.PTD	LANE (8) PATRON TOLL DISPLAY COMMUNICATIONS	RJ-45	BARE WIRE AT PEDESTAL	FIELD WIRED - ONLY FOUR PINS USED: PIN 3 - DEVICE RECEIVE, PIN 5 - GROUND, PINS 7 AND 8 JUMPERED	RS232	PEDESTAL WIRE CENTER TA - PTD DATA	TBD	NEW
							PEDESTAL WIRE CENTER TA - PTD DATA		NEW
117	Lane(#)TR	LANE (#) TRIGGER	RJ-45	BARE WIRE	Pin to Pin	TTL(optically Isolated)	(See Note 1 below) Wire to Designated Trigger Terminals for Front and Rear Trigger (+/-) in Pedestal Wire Center	TBD	NEW
118	S8.PROX	LANE (8) MANUAL LANE TERMINAL PCPROX CARD READER	RJ-45	DB9 (MALE)	SERIAL	RS232	(See Note 1 below)	S-8	NEW
119	PROXPWR	LANE (8) MANUAL LANE TERMINAL PCPROX CARD READER POWER	PS2 (MALE)	PS2 (FEMALE)	SERIAL	RS232	(See Note 1 below)	PS/2	NEW
120	S9.MLT	LANE (8) TOLL BOOTH MANUAL LANE TERMINAL (MLT) COMMUNICATIONS	RJ-45	RJ-45	SERIAL	RS232	(See Note 1 below)	TBD	NEW
121	S10.RP	LANE (8) TOLL BOOTH RECEIPT PRINTER COMMUNICATIONS	RJ-45	DB25 (MALE)	NULL MODEM	RS232	PREFAB NULL MODEM CABLE - NOT TO EXCEED 50 FT	TBD	NEW
122	MLTVGA	LANE (8) TOLL BOOTH MANUAL LANE TERMINAL VIDEO	DB15(VGA) (FEMALE)	DB15(VGA) (MALE)	VGA/SVGA/XGA analog	VIDEO	PREFAB VIDEO CABLE - NOT TO EXCEED 50 FT	MONITOR	NEW
123	MLTAUDIO	LANE (8) TOLL BOOTH MANUAL LANE TERMINAL SPEAKER	3.5mm Plug (MALE)	3.5mm Plug (MALE)	AUDIO	AUDIO	PREFAB AUDIO CABLE	AUDIO	NEW

Notes:

1.) Lane Server to peripheral cable pin connections - refer to peripheral Installation Guide. RJ-45 at Lane Server: 1= CTS, 2=CD, 3=RxD, 4=Gnd, 5=Gnd, 6=TxD, 7=DTR, 8=RTS. (No handshaking is used)

2.) Schedule does not include booth access control requirements, booth DVAS or wiring.

Filename: 126_Schedule2.dgn

Scale:

No.	Revision	By	Date

Designed by: HNTB

CONSULTANT PROJECT MANAGER: R. Bruce Munger, P.E.

	By	Date		By	Date
Designed	RBM	05/15	Checked	RBM	05/15
Drawn	---	05/15	In Charge of	RAL	05/15

HNTB CORPORATION
340 County Road, Suite 6-C
Westbrook, ME 04092
TEL (207) 774-5155
FAX (207) 228-0909

MAINE TURNPIKE

THE GOLD STAR MEMORIAL HIGHWAY

MTA PROJECT MANAGER: William Yates

FALMOUTH SPUR TOLL PLAZA
ORT CONVERSION

CASH LANE DATA SCHEDULE

SHEET NUMBER: E-07

CONTRACT:2015.13

WIRING SHOWN IS FOR CASH LANE. REPLICATE FOR SIMILAR LANES.

ATT-ETC LANE NETWORK WIRING SCHEDULE

	WIRE LABEL	DESCRIPTION	COLOR	CONNECTOR AT FX PATCH PANEL (COMPUTER ROOM)	COMMUNICATIONS SWITCH IN THE LANE SERVER	WIRING CONVENTION	PROTOCOL	FIELD WIRING INSTRUCTIONS	STATUS
LANE SERVER MULTIMODE FIBER (FOR REMOTE SWITCH ACCESS)									
200	(Ln#)LS	LANE SERVER NETWORK CONNECTION - SEND	BLUE	ST (MALE)	ST (MALE)	6-FIBER (TYP) (4 Min Fiber) MULTI-MODE 100mbs	62.5/125 MICRONS INDOOR/ OUTDOOR RISER RATED	FROM PLAZA COMMUNICATIONS RACK FIBER (FX) PATCH PANEL TO THE BOOTH LANE SERVER FIBER LINE INTERFACE UNIT (LIU) IN THE CABINET OR GUTTER. PROVIDE 1 EA 3M DUPLEX FX PATCH CABLE (STM to STM) FROM THE LIU TO THE LANE 1 LANE SERVER NETWORK SWITCH.	NEW
201		LANE SERVER NETWORK CONNECTION - RECEIVE	ORANGE						NEW
202		LANE SERVER NETWORK CONNECTION - SPARE SEND	GREEN						NEW
203		LANE SERVER NETWORK CONNECTION - SPARE RECEIVE	BROWN						NEW
204		LANE SERVER NETWORK CONNECTION - SPARE SEND (optional)	SLATE						NEW
205		LANE SERVER NETWORK CONNECTION - SPARE RECEIVE (optional)	WHITE						NEW
LANE SERVER ETHERNET CONNECTION (FOR LOCAL SWITCH -SAME ROOM- ACCESS)									
206	(Ln#).LS	LANE SERVER NETWORK CONNECTION (CAT5E/6 CABLE ALTERNATIVE TO FIBER ABOVE IF LOCAL SWITCH PROVIDED AND CONNECTION IS LESS THAN 300 FEET)	CAT5E COLOR STANDARD	RJ-45 (MALE)	RJ-45 (MALE)	CAT5E/6 DIRECT BURIAL	UTP	CAT5E BULK CABLE FROM THE SERVER ROOM TO THE LANE CABINET FIBER SWITCH LANE SERVER SWITCH. TERMINATE AND TEST CABLE RUN.	NEW
DIGITAL VIDEO AUDIT SYSTEM (DVAS)									
208	DVAS.(Ln#).PP	LANE DVAS PAYPOINT CAMERA NETWORK CONNECTIONS	CAT5E COLOR STANDARD	RJ-45 (MALE)	RJ-45 (MALE)	CAT5E/6 DIRECT BURIAL	UTP	CAT5E BULK CABLE FROM THE LANE CONTROLLER AND FIBER SWITCH TO THE LANE DVAS PAYPOINT CAMERA. TERMINATE AND TEST CABLE RUN. ALLOW 10' OF CABLE TO REACH FROM THE DVAS DATA JUNCTION BOX TO THE LANE 1 CAMERA ENCLOSURE.	NEW
AUTOMATIC VEHICLE IDENTIFICATION (AVI)									
209	(Ln#).AVIE	LANE AVI READER ETHERNET DATA CONNECTION	CAT5E COLOR STANDARD	RJ-45 (MALE)	RJ-45 (MALE)	CAT5E/6 DIRECT BURIAL	10/100 UTP	CAT5E BULK CABLE FROM THE LANE CONTROLLER CONNECTION PANEL AVI 110 JACK TO THE LANE AVI READER SERIAL TO ETHERNET CONVERTER	NEW
210	(Ln#).AVIS	LANE AVI READER DATA CONNECTION	CAT5E COLOR STANDARD	RJ-45 (MALE)	RJ-45 (MALE)	CAT5E/6 DIRECT BURIAL	10/100 UTP	CAT5E BULK CABLE FROM THE LANE CONTROLLER CONNECTION PANEL AVI 110 JACK TO THE LANE AVI READER SERIAL TO ETHERNET CONVERTER	NEW
TRAFFIC CONTROL PEDESTAL (TCP) MAINTENANCE PORT									
211	(Ln#).TCPFVES	LANE TRAFFIC CONTROL PEDESTAL VES CAMERA CONNECTION	CAT5E COLOR STANDARD	RJ-45 (MALE)	RJ-45 (MALE)	CAT5E/6 DIRECT BURIAL	GIGABIT UTP	CAT5E BULK CABLE FROM THE LANE CONTROLLER CONNECTION PANEL VES 110 JACK TO THE LANE ISLAND TRAFFIC CONTROL PEDESTAL FRONT CAMER PORT.	NEW
212	(Ln#).TCPRVES	LANE TRAFFIC CONTROL PEDESTAL VES CAMERA CONNECTION	CAT5E COLOR STANDARD	RJ-45 (MALE)	RJ-45 (MALE)	CAT5E/6 DIRECT BURIAL	GIGABIT UTP	CAT5E BULK CABLE FROM THE LANE CONTROLLER CONNECTION PANEL VES 110 JACK TO THE LANE ISLAND TRAFFIC CONTROL PEDESTAL REAR CAMER PORT.	NEW
213	(Ln#).TCPM	LANE TRAFFIC CONTROL PEDESTAL MAINTENANCE NETWORK CONNECTION	CAT5E COLOR STANDARD	RJ-45 (MALE)	RJ-45 (MALE)	CAT5E/6 DIRECT BURIAL	GIGABIT UTP	CAT5E BULK CABLE FROM THE LANE CONTROLLER AND FIBER SWITCH TO THE LANE ISLAND TRAFFIC CONTROL PEDESTAL MAINTENANCE PORT.	NEW

NOTES:

1). ALL NETWORK CABLES ARE GIGABIT COMPLIANT, SUITABLE FOR OUTDOOR/WET ENVIRONMENT, OSP GRADE FOR DIRECT BURIAL

2). STRADDLE ANTENNAS/READERS ARE LOCATED BETWEEN LANES ABOVE THE STRIPE. IF STRADDLE ANTENNAS/READERS ARE OMITTED BY PLANS, WIRING MAY BE OMITTED

Date:5/15/2015

Filename: 127_Schedule3.dgn

Scale:

No.	Revision	By	Date

Designed by: HNTB

CONSULTANT PROJECT MANAGER: R. Bruce Munger, P.E.

	By	Date		By	Date
Designed	RBM	05/15	Checked	RBM	05/15
Drawn	---	05/15	In Charge of	RAL	05/15

HNTB CORPORATION
340 County Road, Suite 6-C
Westbrook, ME 04092
TEL (207) 774-5155
FAX (207) 228-0909

MAINE TURNPIKE

THE GOLD STAR MEMORIAL HIGHWAY

MTA PROJECT MANAGER: William Yates

FALMOUTH SPUR TOLL PLAZA
ORT CONVERSION

CASH LANE NETWORK WIRING SCHEDULE

SHEET NUMBER: E-08

CONTRACT:2015.13

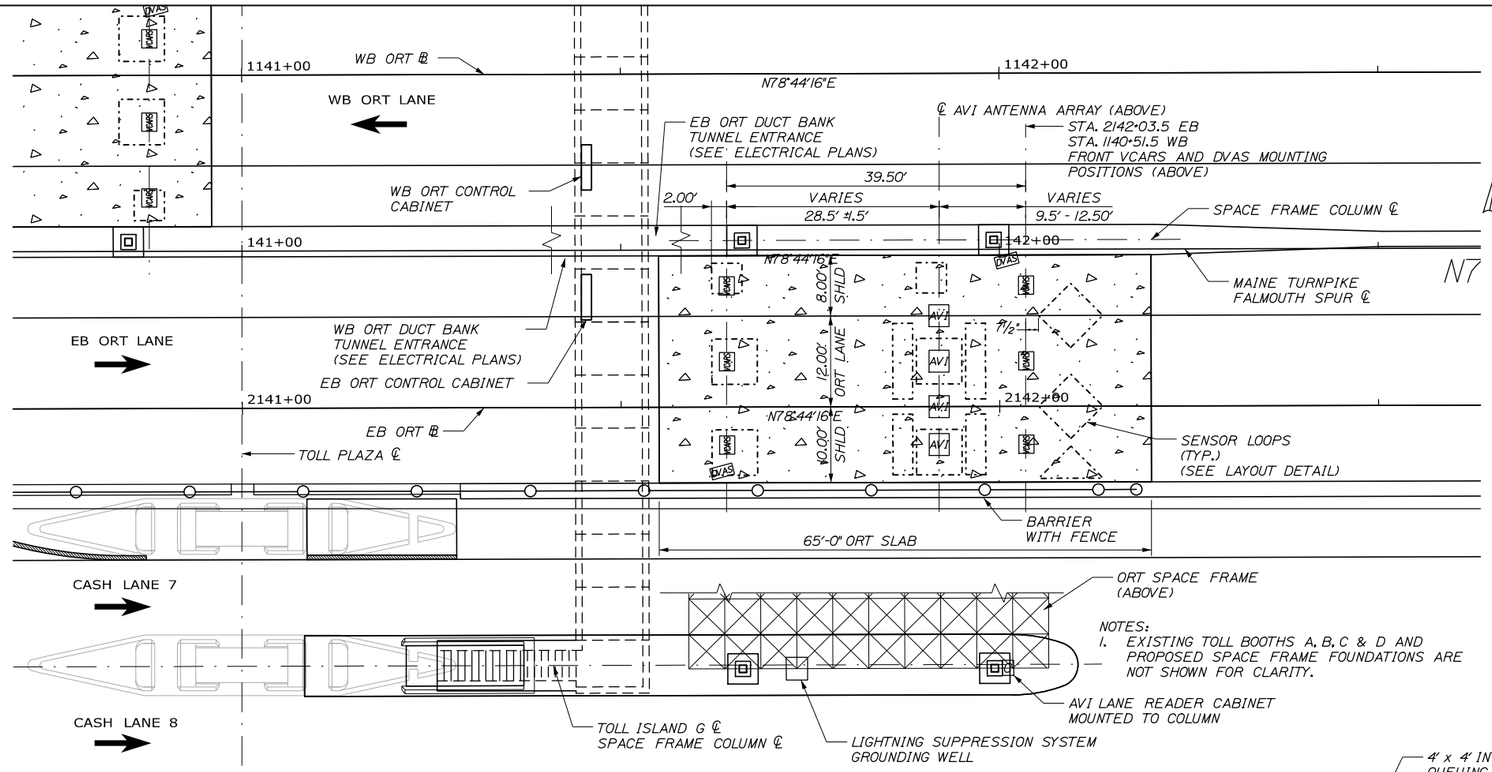

NOTES:
1. EXISTING TOLL BOOTHS A, B, C & D AND PROPOSED SPACE FRAME FOUNDATIONS ARE NOT SHOWN FOR CLARITY.

EB ORT PLAN
(WB ORT SIMILAR)

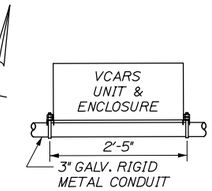

VCARS ELEVATION

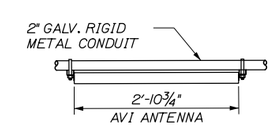

AVI ANTENNA ELEVATION

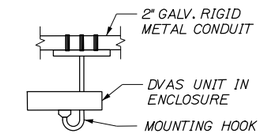

DVAS ELEVATION

NOTES:
1. REFER TO SPACE FRAME PLANS FOR MOUNTING ASSEMBLIES.
2. REFER TO ELECTRICAL PLANS FOR CONNECTIONS OF POWER AND COMMUNICATION LINES.
3. TRANSCORE WILL PROVIDE VCARS UNITS, ENCLOSURES AND MOUNTING KITS. THE CONTRACTOR SHALL INSTALL AND CONNECT UNITS TO POWER AND COMMUNICATIONS LINES.
4. THE MTA WILL PROVIDE AVI ANTENNAS. CONTRACTOR WILL PROVIDE NECESSARY CONNECTION HARDWARE AND CONNECT POWER AND COMMUNICATION LINES.
5. TRANSCORE WILL PROVIDE DVAS UNITS, ENCLOSURES AND MOUNTING HOOKS. THE CONTRACTOR SHALL CONNECT POWER AND COMMUNICATION LINES.
6. TRANSCORE WILL PROVIDE IVIS SENSOR LOOPS EXCEPT FOR THE HALF DIAMOND SENSOR WHICH SHALL BE PROVIDED BY THE CONTRACTOR. REFER TO SPECIAL PROVISION 655 FOR MORE INFORMATION.
7. BOTH REAR AND FRONT VCARS MOUNTING POSITIONS ARE FIXED. THE AVI ANTENNA ARRAY SHALL HAVE THE ABILITY TO MOVE 3' LONGITUDINAL TO TRAFFIC AND 1' VERTICALLY.

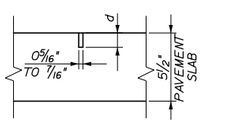

d = 1¼" TO 1½" FOR SINGLE LEAD CUT
2½" FOR MULTIPLE LEAD CUT
3" AT PITCH POCKET ENTRY

LEAD-IN CUT
SCALE: 2" = 1'

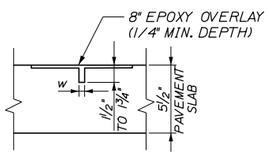

SENSOR CUT
SCALE: 2" = 1'

w = ½" FOR GRADIENT ENDS
⅜" FOR ALL OTHER CUTS

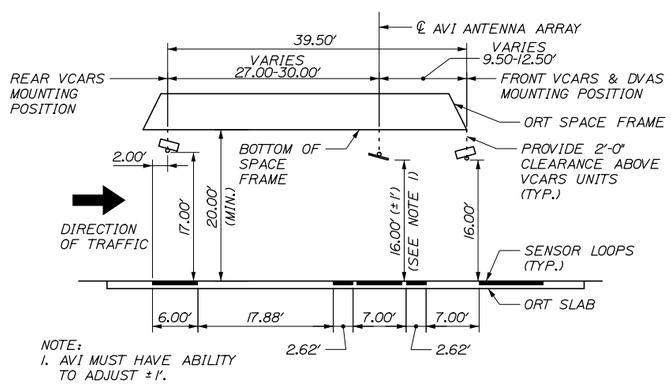

NOTE:
1. AVI MUST HAVE ABILITY TO ADJUST ± 1'.

EB PROFILE VIEW
(MIRROR FOR WB)

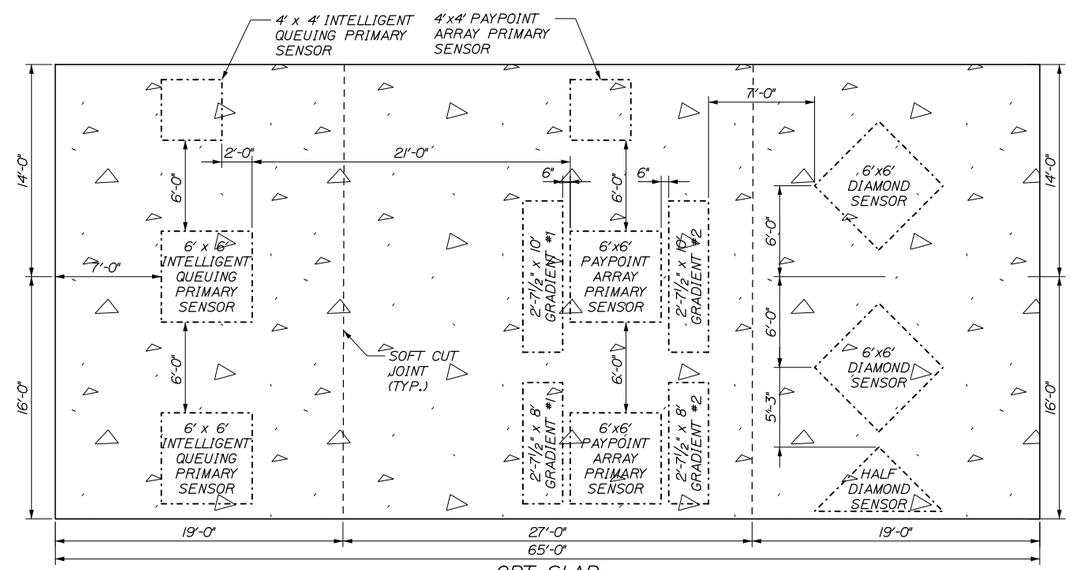

ORT SLAB
JOINT AND SENSOR LOOP LAYOUT DETAIL
SCALE: 1" = 5'

NOTE: SOFT CUT JOINTS TO BE FIELD LOCATED.

CONCRETE CUTTING NOTES:

1. TRANSCORE SHALL INJECT LOCTITE EPOXY INTO SAW CUT BEFORE INSTALLING SENSORS AND LEADS. TRANSCORE SHALL PROVIDE EQUIPMENT, TEMPLATES AND EPOXY. SEE SPECIAL PROVISION SECTION 655 FOR MORE INFORMATION.

Scale: 10 0 10 20 — Scale of Feet

No.	Revision	By	Date

Designed by: HNTB

CONSULTANT PROJECT MANAGER: R. Bruce Munger, P.E.

	By	Date		By	Date
Designed	RBM	05/15	Checked	RBM	05/15
Drawn	---	05/15	In Charge of	RAL	05/15

HNTB CORPORATION
340 County Road, Suite 6-C
Westbrook, ME 04092
TEL (207) 774-5155
FAX (207) 228-0909

MAINE TURNPIKE

THE GOLD STAR MEMORIAL HIGHWAY

MTA PROJECT MANAGER: William Yates

FALMOUTH SPUR TOLL PLAZA
ORT CONVERSION

ORT EQUIPMENT LAYOUT

SHEET NUMBER: E-09

CONTRACT: 2015.13

Date: 5/15/2015

Filename: 128_ORTEquipmentLayout.dgn

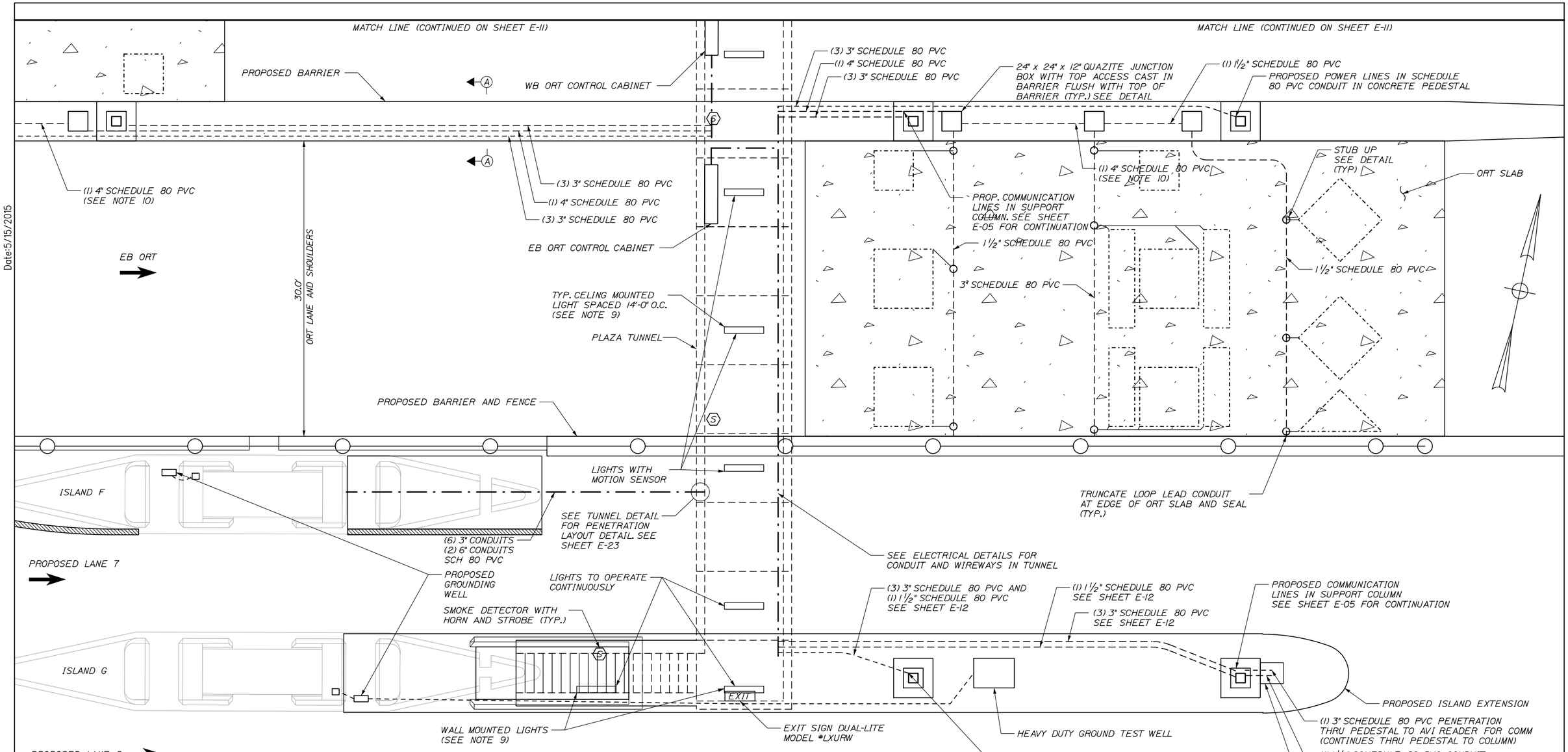

EB PLAN

NOTES:

1. ALL LOOP LEAD STUB UPS ARE 3" DIAMETER AND SHALL BE 3" MIN. FROM EDGE OF SLAB. THE TOP ELEVATION OF ALL ALL SENSOR LOOP CONDUIT FROM STUB UPS SHALL BE AT BOTTOM OF SLAB. SEE DETAIL ON SHEET E-03.
2. CONTRACTOR SHALL CONFIRM LOCATIONS OF JOINTS AND STUB UPS PRIOR TO SETTING STUB UPS.
3. CONTRACTOR SHALL VERIFY ALL CONDUIT STUB UP LOCATIONS WITH SYSTEM INTEGRATOR PRIOR TO INSTALLATION.
4. ALL SENSOR LOOP JUNCTION BOXES SHALL BE NON-METALLIC.
5. SENSOR LOOP LEAD WIRES MUST NOT CROSS ANY CONCRETE CONSTRUCTION JOINTS.
6. FOR EXACT LOOP SENSOR LOCATIONS SEE SHEET E-09.
7. SEE SHEET E-12 FOR SECTION A-A
8. CONDUITS BETWEEN PIERS TO BE IN CAST IN PLACE MEDIAN BARRIER.
9. TUNNEL LIGHTS SHALL BE CREE #WS4-47L-35K-10V-SSL. CIRCUIT TO A 20A/1P BREAKER IN ORT CLEAN POWER PANEL FOR EB & WB LANES. 2#12, 1#12 IN ¾" RGS CONDUIT.
10. CONDUITS BETWEEN PIERS TO BE IN CAST-IN-PLACE MEDIAN BARRIER.
11. ALL SMOKE DETECTORS SHALL BE COMBINATION HORN/STROBE GENTEX MODEL 713CS-C.

LEGEND

- - - - - - - CONDUIT WITH POWER
— — — — — CONDUIT WITH COMMUNICATION
———— LOOPS LEADS TO STUB UPS

Date:5/15/2015

Filename: 129_Underground Electrical.DGN

Scale:

No.	Revision	By	Date

Designed by: HNTB

CONSULTANT PROJECT MANAGER: R. Bruce Munger, P.E.

	By	Date		By	Date
Designed	RBM	05/15	Checked	RBM	05/15
Drawn	MPC	05/15	In Charge of	RAL	05/15

HNTB CORPORATION
340 County Road, Suite 6-C
Westbrook, ME 04092
TEL (207) 774-5155
FAX (207) 228-0909

MAINE TURNPIKE

THE GOLD STAR MEMORIAL HIGHWAY

MTA PROJECT MANAGER: William Yates

FALMOUTH SPUR TOLL PLAZA
ORT CONVERSION

ORT UNDERGROUND ELECTRICAL PLAN

SHEET NUMBER: E-10

CONTRACT:2015.13

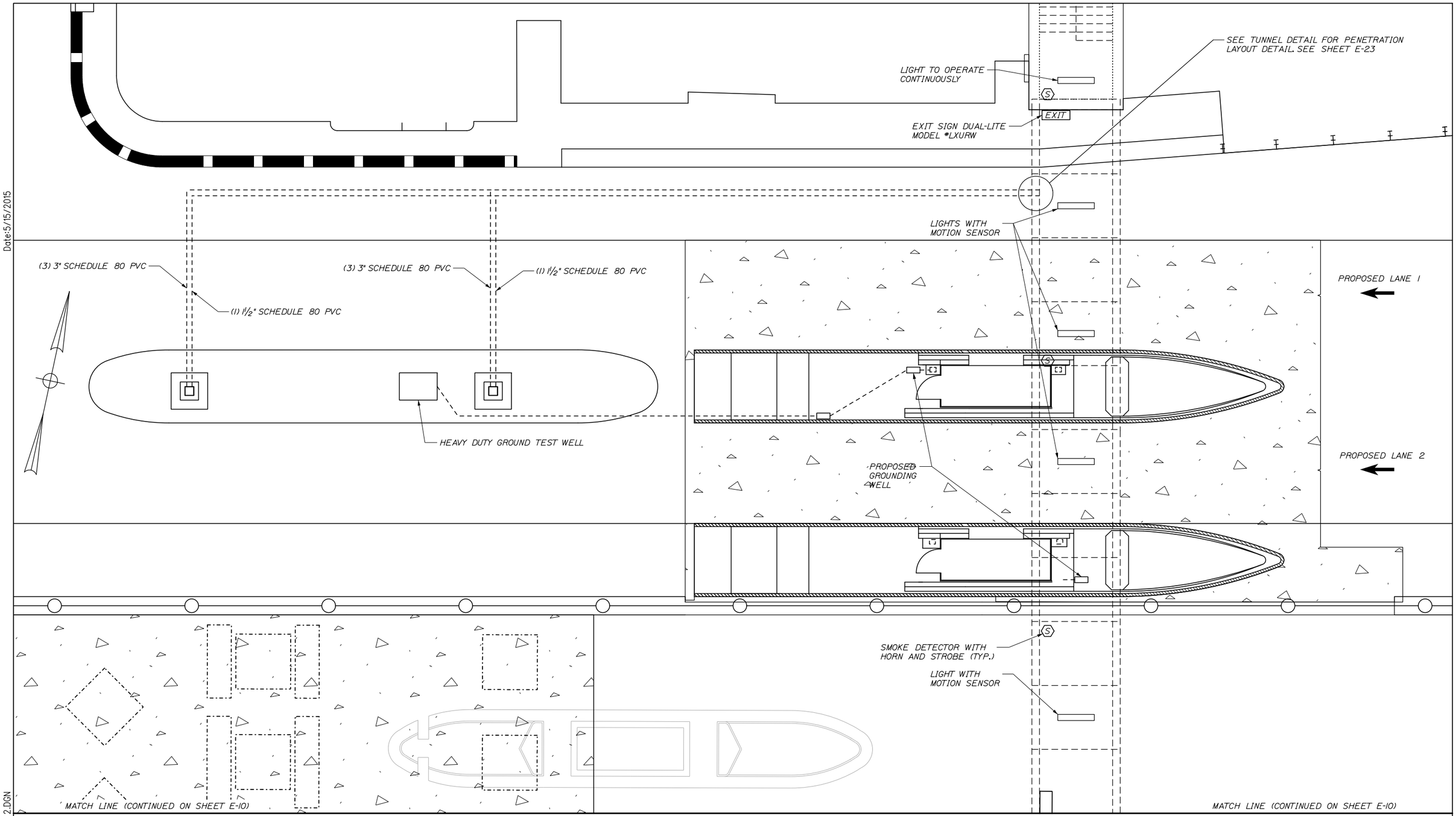

Date:5/15/2015

Filename: 130_Underground Electrical 2.DGN

Scale:

No.	Revision	By	Date

Designed by:

HNTB

CONSULTANT PROJECT MANAGER: R. Bruce Munger, P.E.

	By	Date		By	Date
Designed	RBM	05/15	Checked	RBM	05/15
Drawn	PEB	05/15	In Charge of	RAL	05/15

HNTB CORPORATION
340 County Road, Suite 6-C
Westbrook, ME 04092
TEL (207) 774-5155
FAX (207) 228-0909

MAINE TURNPIKE

THE GOLD STAR MEMORIAL HIGHWAY

MTA PROJECT MANAGER: William Yates

FALMOUTH SPUR TOLL PLAZA
ORT CONVERSION

ORT UNDERGROUND ELECTRICAL PLAN 2

SHEET NUMBER: E-11

CONTRACT:2015.13

LIGHTNING SUPPRESSION ON TRUNCATED CANOPY NOTES:

1. A NEW GROUNDING WELL SHALL BE INSTALLED IN THE AREA TO BE EXCAVATED FOR THE INSTALLATION OF THE CONDUIT THROUGH ISLANDS A AND E (SEE SHEETS E-10 AND E-11).

2. A SECOND GROUNDING WELL SHALL BE INSTALLED IN THE APPROACH SIDE WALKWAY PORTION OF ISLANDS B AND D. THE PATH OF THE NEW GROUND DOWN CONNECTOR SHALL BE SIMILAR TO THE EXISTING AT ISLAND E, AND SHALL BE ATTACHED TO THE PROPOSED SUPPORT COLUMNS (SEE SHEET S-22).

3. THE GROUNDING WELLS SHALL CONSIST OF A 17"X10.125"X16.25", TRI5 QUAZITE JUNCTION BOX WITH A SINGLE ¾"X10' COPPER CLAD STEEL GROUNDING ROD UL 467 COMPLIANT CENTERED WITHIN THE WELL.

4. BOND EACH SIGN MOUNTING FRAME MEMBER WITH #2/0 AWG BARE COPPER WIRE (TYP).

5. ALL LIGHTNING PROTECTION WORK SHALL BE PROVIDED IN FULL CONFORMANCE WITH UL 96A AND WITH NFPA 780.

6. LIGHTNING PROTECTION CONDUCTOR BENDS SHALL NOT FORM AN INCLUDED ANGLE LESS THAN 90 DEGREES OR HAVE A RADIUS BEND LESS THAN 8".

7. LIGHTNING PROTECTION AIR TERMINALS TO BE INSTALLED ON THE EXISTING CANOPY SIGN LIGHTING FIXTURES SHALL BE 10 INCHES TALL. LIGHTNING PROTECTION AIR TERMINALS TO BE INSTALLED ON THE EXISTING CANOPY ROOF SHALL BE 24 INCHES TALL.

8. SEE SHEET NUMBER E-28 FOR DETAIL OF HEAVY DUTY GROUND TEST WELL.

9. CONTRACTOR TO PROVIDE LIGHTNING SUPPRESSION SYSTEM FOR LANES 1 AND 2. THE PROPOSED CANOPY IS SIMILAR TO THE SYSTEM SHOWN FOR LANES 7 AND 8 BELOW.

10. A ROOF PENETRATION TO ACCOMIDATE A 1½" CONDUIT IS REQUIRED FOR GROUNDING DOWN PROPOSED LANES 7&8 CONDUCTOR. THE REPAIR OF THE ROOF SHALL BE INCIDENTAL TO THE LIGHTNING SUPPRESION SYSTEM. THE ROOF SHALL BE REQUIRED BY THE ROOFING SUBCONTRACTOR OR AS DIRECTED BY THE RESIDENT.

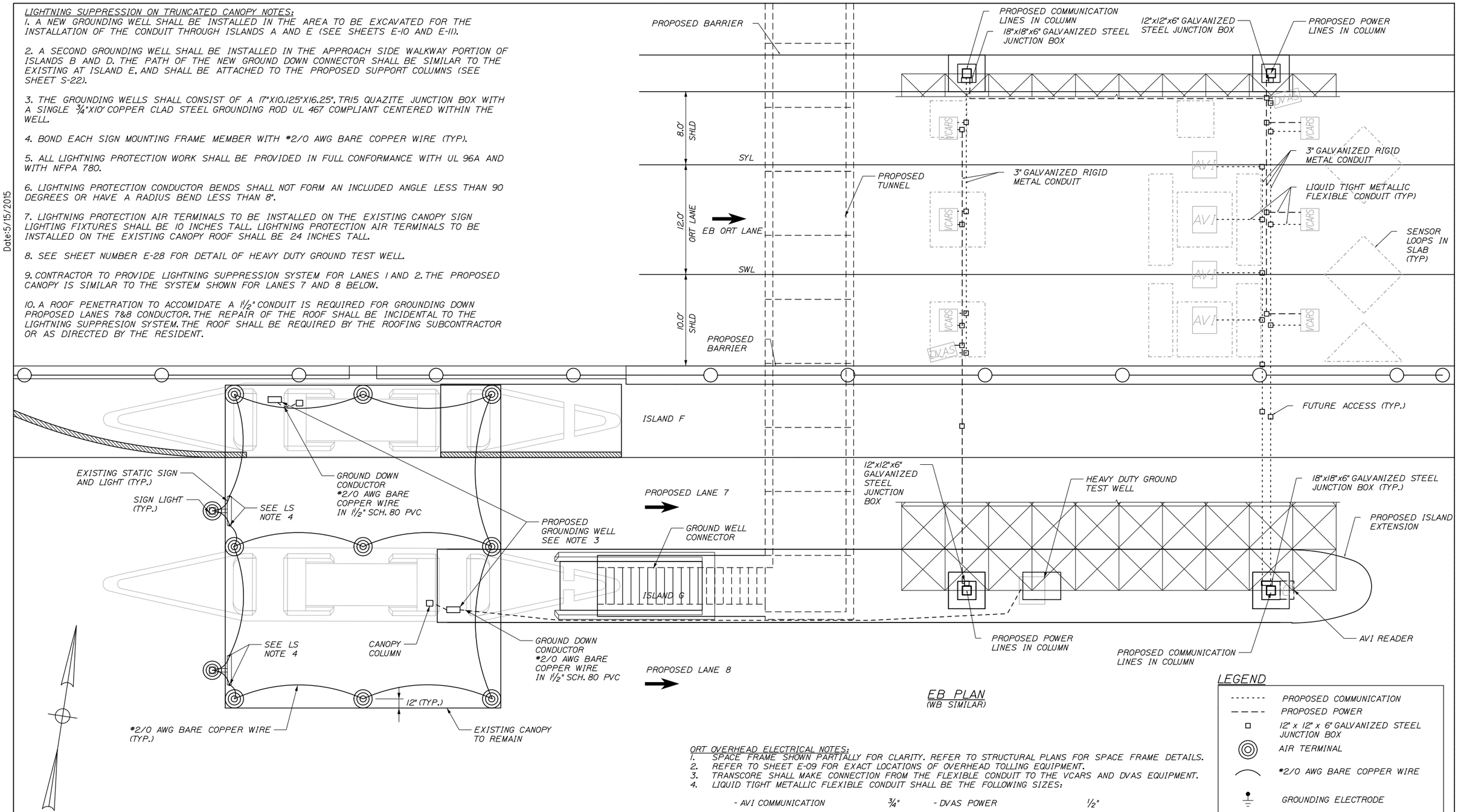

EB PLAN
(WB SIMILAR)

ORT OVERHEAD ELECTRICAL NOTES:

1. SPACE FRAME SHOWN PARTIALLY FOR CLARITY. REFER TO STRUCTURAL PLANS FOR SPACE FRAME DETAILS.
2. REFER TO SHEET E-09 FOR EXACT LOCATIONS OF OVERHEAD TOLLING EQUIPMENT.
3. TRANSCORE SHALL MAKE CONNECTION FROM THE FLEXIBLE CONDUIT TO THE VCARS AND DVAS EQUIPMENT.
4. LIQUID TIGHT METALLIC FLEXIBLE CONDUIT SHALL BE THE FOLLOWING SIZES:

- AVI COMMUNICATION	¾"	- DVAS POWER	½"
- VCARS POWER	½"	-DVAS COMMUNICATION	½"
- VCARS COMMUNICATION	½"		

LEGEND

- PROPOSED COMMUNICATION
- PROPOSED POWER
- 12" x 12" x 6" GALVANIZED STEEL JUNCTION BOX
- AIR TERMINAL
- #2/0 AWG BARE COPPER WIRE
- GROUNDING ELECTRODE
- CONCRETE-ENCASED ELECTRODE #2/0 AWG BARE COPPER WIRE

Date:5/15/2015

Filename: 131_Canopy Electrical.DGN

Scale:

No.	Revision	By	Date

Designed by:

HNTB

CONSULTANT PROJECT MANAGER: R. Bruce Munger, P.E.

	By	Date		By	Date
Designed	RBM	05/15	Checked	RBM	05/15
Drawn	MPC	05/15	In Charge of	RAL	05/15

HNTB CORPORATION
340 County Road, Suite 6-C
Westbrook, ME 04092
TEL (207) 774-5155
FAX (207) 228-0909

MAINE TURNPIKE

THE GOLD STAR MEMORIAL HIGHWAY

MTA PROJECT MANAGER: William Yates

FALMOUTH SPUR TOLL PLAZA
ORT CONVERSION

ORT OVERHEAD ELECTRICAL PLAN/EXISTING CANOPY LIGHTNING SUPPRESSION SYSTEM

SHEET NUMBER: E-12

CONTRACT:2015.13

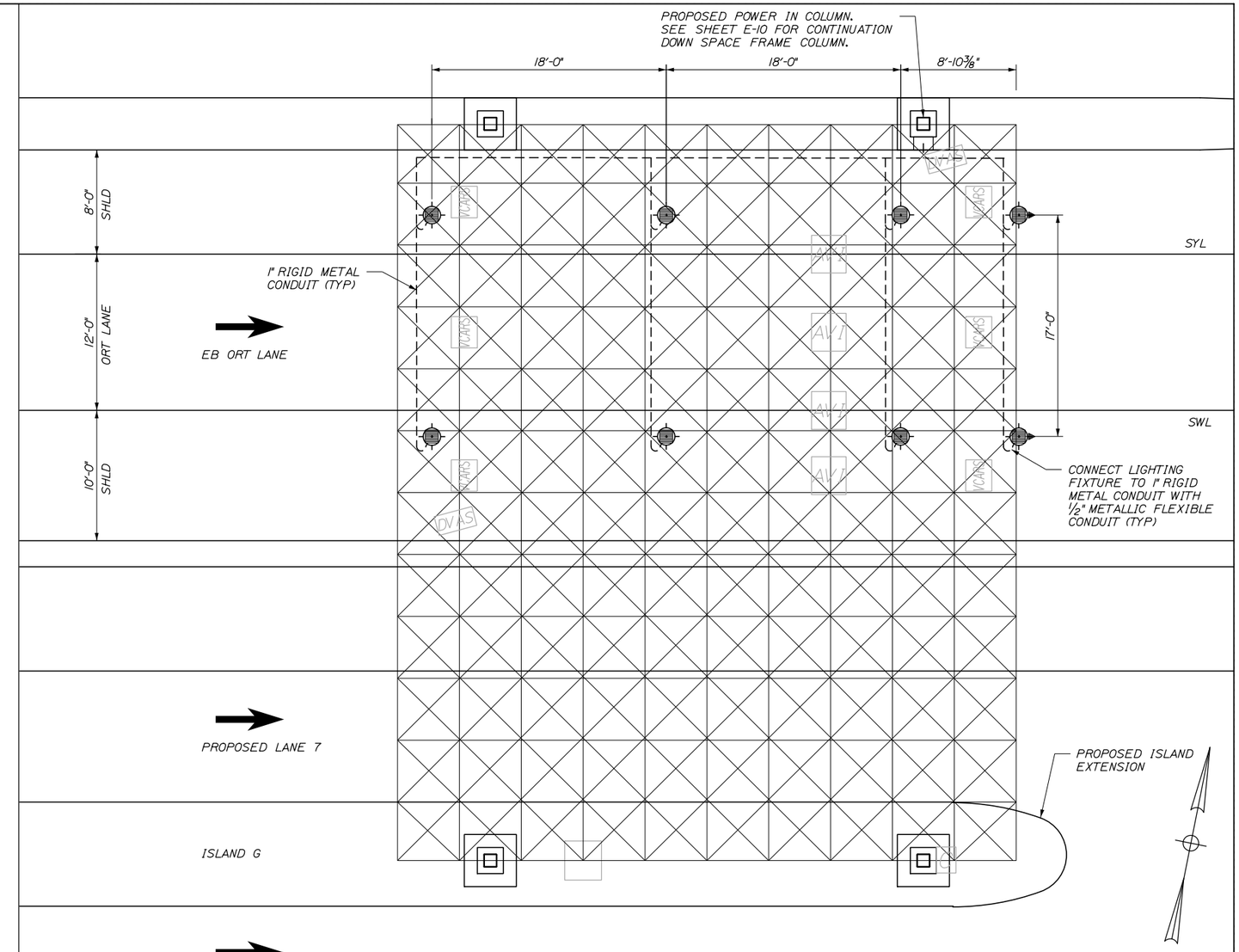

EB PLAN

(WB SIMILAR - MIRRORED ABOUT ℄ OF FALMOUTH SPUR)

LEGEND

SPACE FRAME LED LIGHT FIXTURE

— — — (3) #12 AWG IN 1" GALVANIZED RIGID METAL CONDUIT

NOTES:

1. LIGHTING FIXTURES TO BE # TSP-EDG-40-PD-12-D-UL-SV-525-40K BY CREE LIGHTING OR APPROVED EQUAL.
2. THE CONTRACTOR SHALL SUBMIT A PROPOSED METHOD OF ATTACHING ALL ANCILLARY COMPONENTS TO THE SPACE FRAME TO THE RESIDENT FOR APPROVAL. THE PROPOSED ATTACHMENT METHOD SHALL NOT REQUIRE DRILLING, WELDING OR OTHER ATTACHMENT METHODS THAT WILL DAMAGE THE SPACE FRAME OR ITS GALVANIZED COATING. ANY AREAS OF GALVANIZED COATING THAT ARE DAMAGED BY THE CONTRACTOR DURING INSTALLATION OF ANCILLARY COMPONENTS SHALL BE REPAIRED IN ACCORDANCE WITH ASTM A780.
3. FINAL MOUNTING LOCATIONS TO BE APPROVED BY RESIDENT.
4. PHOTOCELL CONTROL SHALL BE PROVIDED FOR BOTH EB & WB ORT SPACE FRAME LIGHTING. PAYMENT WILL BE INCIDENTAL TO ITEM 655.90.

Date:5/15/2015

Filename: 132_Space Frame Lighting.DGN

Scale:

No.	Revision	By	Date

Designed by: HNTB

CONSULTANT PROJECT MANAGER: R. Bruce Munger, P.E.

	By	Date		By	Date
Designed	RBM	05/15	Checked	RBM	05/15
Drawn	MPC	05/15	In Charge of	RAL	05/15

HNTB CORPORATION
340 County Road, Suite 6-C
Westbrook, ME 04092
TEL (207) 774-5155
FAX (207) 228-0909

MAINE TURNPIKE

THE GOLD STAR MEMORIAL HIGHWAY

MTA PROJECT MANAGER: William Yates

FALMOUTH SPUR TOLL PLAZA
ORT CONVERSION

ORT SPACE FRAME LIGHTING

SHEET NUMBER: E-13

CONTRACT:2015.13

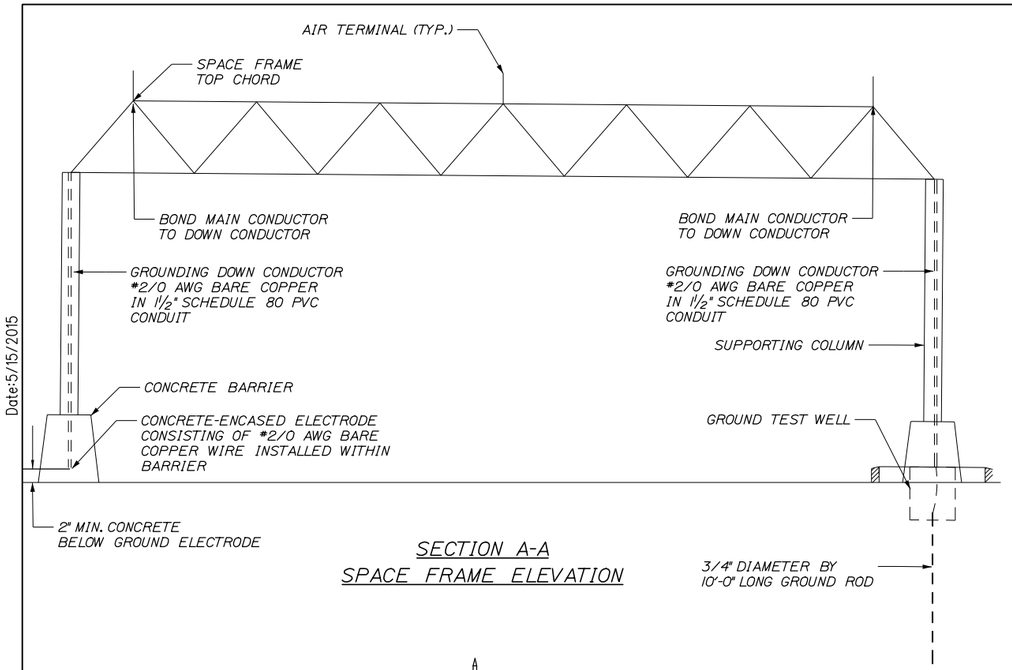

SECTION A-A
SPACE FRAME ELEVATION

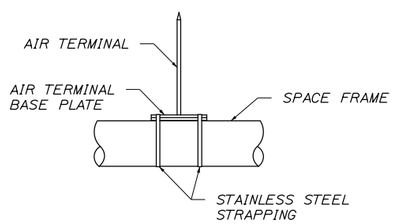

AIR TERMINAL MOUNTING DETAIL

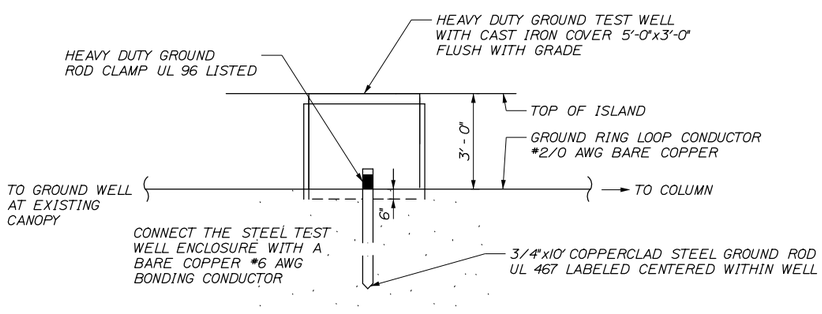

HEAVY DUTY GROUND TEST WELL DETAILS

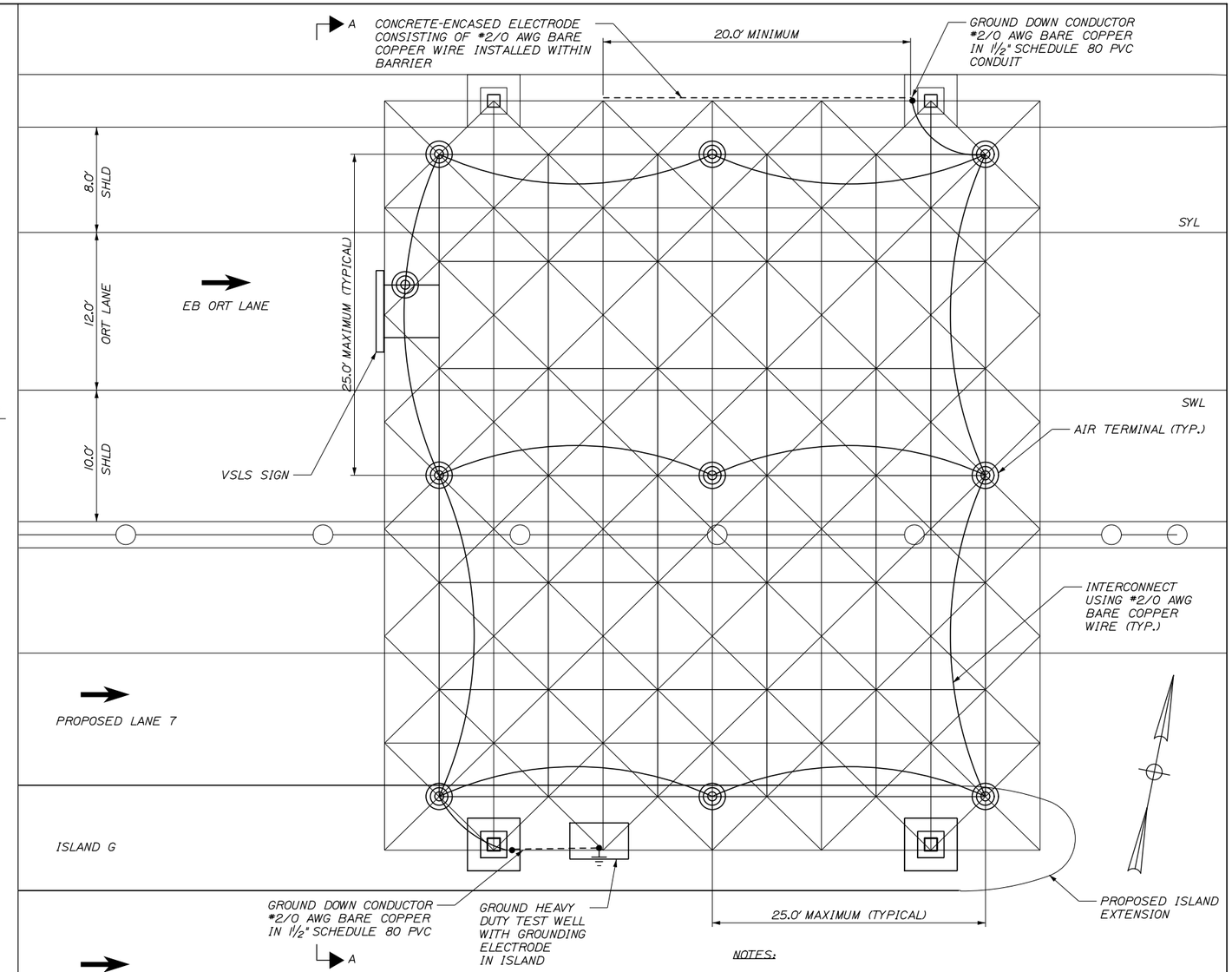

EB PLAN
(WB MIRRORED ABOUT ℄ OF FALMOUTH SPUR)

LEGEND

- AIR TERMINAL
- #2/0 AWG BARE COPPER WIRE
- GROUNDING ELECTRODE
- CONCRETE-ENCASED ELECTRODE #2/0 AWG BARE COPPER WIRE

NOTES:

1. ALL WORK SHALL BE PROVIDED IN FULL CONFORMANCE WITH UL96A AND WITH NFPA 780.
2. SPACING OF AIR TERMINALS SHALL NOT EXCEED 25 FEET ON CENTERS.
3. CONDUCTOR BENDS SHALL NOT FORM AN INCLUDED ANGLE LESS THAN 90 DEGREES OR HAVE A RADIUS OF BEND LESS THAN 8 INCHES.
4. PROVIDE A #2/0 AWG BARE COPPER CONDUCTOR IN 1"#2" SCHEDULE 80 PVC CONDUIT UNDERGROUND TO CONNECT THE GROUNDING ELECTRODES AT THE TEST WELL AT THE SPACE FRAME AND THE TEST WELL AT THE EXISTING CANOPY. SEE SHEET E-07.
5. LIGHTNING PROTECTION AIR TERMINALS TO BE INSTALLED AT THE ORT 70 MPH SIGN SHALL BE 10" TALL. LIGHTNING PROTECTION AIR TERMINALS TO BE INSTALLED ON THE SPACE FRAME SHALL BE 24" TALL.

Date:5/15/2015

Filename: 133_Lightning Suppression System.DGN

Scale:

No.	Revision	By	Date

Designed by:

HNTB

CONSULTANT PROJECT MANAGER: R. Bruce Munger, P.E.

	By	Date		By	Date
Designed	RBM	05/15	Checked	RBM	05/15
Drawn	MPC	05/15	In Charge of	RAL	05/15

HNTB CORPORATION
340 County Road, Suite 6-C
Westbrook, ME 04092
TEL (207) 774-5155
FAX (207) 228-0909

MAINE TURNPIKE

THE GOLD STAR MEMORIAL HIGHWAY

MTA PROJECT MANAGER: William Yates

FALMOUTH SPUR TOLL PLAZA
ORT CONVERSION

ORT LIGHTNING SUPPRESSION SYSTEM

SHEET NUMBER: E-14

CONTRACT:2015.13

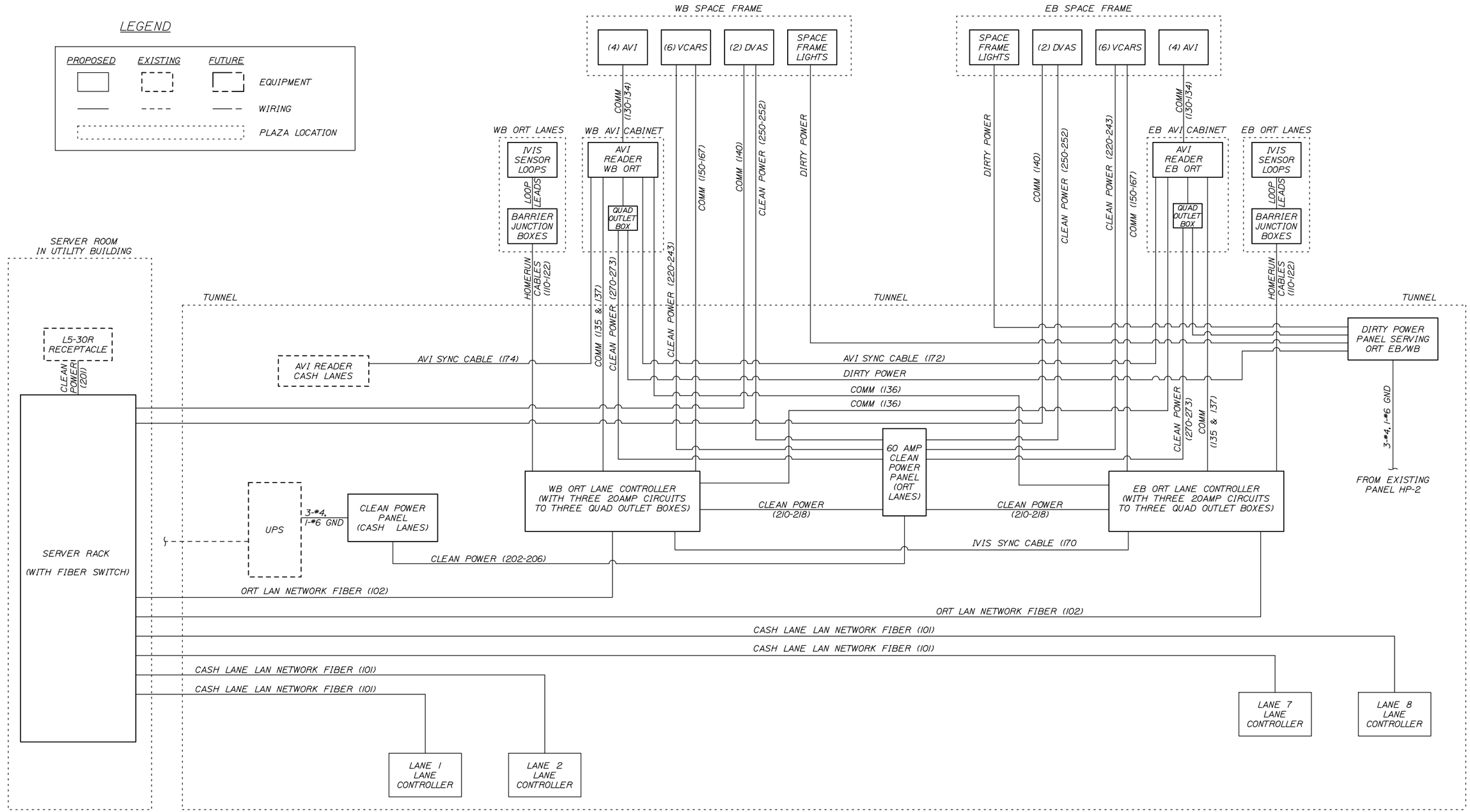

Date:5/15/2015

Filename: 134_Riser Diagram.dgn

Scale:

No.	Revision	By	Date

Designed by:

HNTB

CONSULTANT PROJECT MANAGER: R. Bruce Munger, P.E.

	By	Date		By	Date
Designed	RBM	05/15	Checked	RBM	05/15
Drawn	---	05/15	In Charge of	RAL	05/15

HNTB CORPORATION
340 County Road, Suite 6-C
Westbrook, ME 04092
TEL (207) 774-5155
FAX (207) 228-0909

MAINE TURNPIKE

THE GOLD STAR MEMORIAL HIGHWAY

MTA PROJECT MANAGER: William Yates

FALMOUTH SPUR TOLL PLAZA ORT CONVERSION

ORT RISER DIAGRAM

SHEET NUMBER: E-15

CONTRACT:2015.13

Wiring Shown Below is for one Cash Lane only. Duplicate for Lanes 1, 2, 7, and 8.

CASH LANE LAN Network Fiber (Install MM Fiber, 4 conductor minimum, direct between each ORT and HOST Switch)

RISER DIAGRAM NUMBER	WIRE LABEL	DESCRIPTION	STRAND	COLOR	CORE	JACKET	FROM	TO	TERMINATION
101	(Lane #) (Sw#. /H(Sw#)	PRIMARY LAN NETWORK CONNECTION (Gigabit) (Multimode Fiber 4 Conductor(TYP), 62.5/125 MICRONS INDOOR/OUTDOOR RISER RATED) See Notes.	6 Strand	BLUE ORANGE GREEN BROWN (SLATE) (WHITE)	N/A	Direct Burial Grade (see Note)	Plaza Network Server fiber patch panel, switch blade, or fiber line termination unit	Cash Lane (Lane #) Server Cabinet/Back Panel Fiber Line Termination Unit or Fiber Patch Panel	Terminate ST each end (all strands), Supply Duplex 6m ST-ST Patch Cord

Wiring Shown Below is for one direction of ORT travel only. Duplicate for second ORT direction of travel.

ORT SYSTEMS NETWORK AND DATA WIRING

ORT LAN Network Fiber (Install MM Fiber, 4 conductor minimum, direct between each ORT and HOST Switch)

RISER DIAGRAM NUMBER	WIRE LABEL	DESCRIPTION	STRAND	COLOR	CORE	JACKET	FROM	TO	TERMINATION
102	(ORT#)(Sw#. /H(Sw#)	PRIMARY LAN NETWORK CONNECTION (Gigabit) (Multimode Fiber 4 Conductor(TYP), 62.5/125 MICRONS INDOOR/OUTDOOR RISER RATED) See Notes.	6 Strand	BLUE ORANGE GREEN BROWN (SLATE) (WHITE)	N/A	Direct Burial Grade (see Note)	Plaza Network Server fiber patch panel, switch blade, or fiber line termination unit	Lane Equipment Room ORT Server Cabinet/Back Panel Fiber Line Termination Unit or Fiber Patch Panel	Terminate ST each end (all strands), Supply Duplex 6m ST-ST Patch Cord

Intelligent Vehicle Identification System (IVIS™) (Install Home Run Lead between Lane Sensor Junction Box and ORT Lane Server Rack Tip Out - Leave 10' service loop in Electrical Gutter)

RISER DIAGRAM NUMBER	WIRE LABEL	DESCRIPTION	AWG	COLOR	CORE	JACKET	FROM	TO	LANE SERVER TERMINAL #
110	ORT(ORT#).LSIQ	LEFT SHOULDER ORT INTELLIGENT QUEUING (IQ) PRIMARY SENSOR	IMSA 50-2 #16	BLACK	STRANDED	LDPE (TYP)	SHOULDER IQ PRIMARY SENSOR JUNCTION BOX	ORT CABINET - IVIS SENSOR LEADS ARE SPLICED TO A HOME RUN CABLE (IMSA 50-2, 16AWG) AT THE JUNCTION BOX. THE HOME RUN CABLE IS TERMINATED BY UTS AT THE ORT SERVER FIELD WIRING RACK. LEAVE 10' SLACK LOOP IN ELECTRICAL GUTTER.	Integrator to terminate
111	ORT(ORT#).LSPP	LEFT SHOULDER ORT PAYPOINT ARRAY PRIMARY SENSOR	IMSA 50-2 #16	BLACK	STRANDED	LDPE (TYP)	SHOULDER PAYPOINT ARRAY PRIMARY SENSOR JUNCTION BOX	ORT CABINET - IVIS SENSOR LEADS ARE SPLICED TO A HOME RUN CABLE (IMSA 50-2, 16AWG) AT THE JUNCTION BOX. THE HOME RUN CABLE IS TERMINATED BY UTS AT THE ORT SERVER FIELD WIRING RACK. LEAVE 10' SLACK LOOP IN ELECTRICAL GUTTER.	Integrator to terminate
112	ORT(ORT#).L1IQ	TRAVEL LANE 1 ORT INTELLIGENT QUEUING (IQ) PRIMARY SENSOR	IMSA 50-2 #16	BLACK	STRANDED	LDPE (TYP)	SHOULDER IQ PRIMARY SENSOR JUNCTION BOX	ORT CABINET - IVIS SENSOR LEADS ARE SPLICED TO A HOME RUN CABLE (IMSA 50-2, 16AWG) AT THE JUNCTION BOX. THE HOME RUN CABLE IS TERMINATED BY UTS AT THE ORT SERVER FIELD WIRING RACK. LEAVE 10' SLACK LOOP IN ELECTRICAL GUTTER.	Integrator to terminate
113	ORT(ORT#).L1G1	TRAVEL LANE 1 ORT PAYPOINT ARRAY GRADIENT SENSOR #1	IMSA 50-2 #16	BLACK	STRANDED	LDPE (TYP)	SHOULDER PAYPOINT ARRAY GRADIENT SENSOR #1 JUNCTION BOX	ORT CABINET - IVIS SENSOR LEADS ARE SPLICED TO A HOME RUN CABLE (IMSA 50-2, 16AWG) AT THE JUNCTION BOX. THE HOME RUN CABLE IS TERMINATED BY UTS AT THE ORT SERVER FIELD WIRING RACK. LEAVE 10' SLACK LOOP IN ELECTRICAL GUTTER.	Integrator to terminate
114	ORT(ORT#).L1PP	TRAVEL LANE 1 ORT PAYPOINT ARRAY PRIMARY SENSOR					SHOULDER PAYPOINT ARRAY PRIMARY SENSOR JUNCTION BOX		
115	ORT(ORT#).L1G2	TRAVEL LANE 1 ORT PAYPOINT ARRAY GRADIENT SENSOR #2					SHOULDER PAYPOINT ARRAY GRADIENT SENSOR #2 JUNCTION BOX		
116	ORT(ORT#).RSIQ	RIGHT SHOULDER ORT INTELLIGENT QUEUING (IQ) PRIMARY SENSOR	IMSA 50-2 #16	BLACK	STRANDED	LDPE (TYP)	SHOULDER IQ PRIMARY SENSOR JUNCTION BOX	ORT CABINET - IVIS SENSOR LEADS ARE SPLICED TO A HOME RUN CABLE (IMSA 50-2, 16AWG) AT THE JUNCTION BOX. THE HOME RUN CABLE IS TERMINATED BY UTS AT THE ORT SERVER FIELD WIRING RACK. LEAVE 10' SLACK LOOP IN ELECTRICAL GUTTER.	Integrator to terminate
117	ORT(ORT#).RSG1	RIGHT SHOULDER ORT PAYPOINT ARRAY GRADIENT SENSOR #1	IMSA 50-2 #16	BLACK	STRANDED	LDPE (TYP)	SHOULDER PAYPOINT ARRAY GRADIENT SENSOR #1 JUNCTION BOX	ORT CABINET - IVIS SENSOR LEADS ARE SPLICED TO A HOME RUN CABLE (IMSA 50-2, 16AWG) AT THE JUNCTION BOX. THE HOME RUN CABLE IS TERMINATED BY UTS AT THE ORT SERVER FIELD WIRING RACK. LEAVE 10' SLACK LOOP IN ELECTRICAL GUTTER.	Integrator to terminate
118	ORT(ORT#).RSPP	RIGHT SHOULDER ORT PAYPOINT ARRAY PRIMARY SENSOR					SHOULDER PAYPOINT ARRAY PRIMARY SENSOR JUNCTION BOX		
119	ORT(ORT#).RSG2	RIGHT SHOULDER ORT PAYPOINT ARRAY GRADIENT SENSOR #2					SHOULDER PAYPOINT ARRAY GRADIENT SENSOR #2 JUNCTION BOX		
120	ORT(ORT#).MS/1_D1	MEDIAN SHOULDER/ TRAVEL LANE 1 ORT DIAMOND SENSOR	IMSA 50-2 #16	BLACK	STRANDED	LDPE (TYP)	SHOULDER DIAMOND SENSOR JUNCTION BOX	ORT CABINET - IVIS SENSOR LEADS ARE SPLICED TO A HOME RUN CABLE (IMSA 50-2, 16AWG) AT THE JUNCTION BOX. THE HOME RUN CABLE IS TERMINATED BY UTS AT THE ORT SERVER FIELD WIRING RACK. LEAVE 10' SLACK LOOP IN ELECTRICAL GUTTER.	Integrator to terminate
121	ORT(ORT#).1/RS_D2	TRAVEL LANE 1/RIGHT SHOULDER ORT DIAMOND SENSOR	IMSA 50-2 #16	BLACK	STRANDED	LDPE (TYP)	SHOULDER DIAMOND SENSOR JUNCTION BOX	ORT CABINET - IVIS SENSOR LEADS ARE SPLICED TO A HOME RUN CABLE (IMSA 50-2, 16AWG) AT THE JUNCTION BOX. THE HOME RUN CABLE IS TERMINATED BY UTS AT THE ORT SERVER FIELD WIRING RACK. LEAVE 10' SLACK LOOP IN ELECTRICAL GUTTER.	Integrator to terminate
122	ORT(ORT#).OS_D3	RIGHT SHOULDER OUTSIDE HALF DIAMOND	IMSA 50-2 #16	BLACK	STRANDED	LDPE (TYP)	SHOULDER DIAMOND SENSOR JUNCTION BOX	ORT CABINET - HALF DIAMOND SENSOR LEADS ARE SPLICED TO A HOME RUN CABLE (IMSA 50-2, 16AWG) AT THE JUNCTION BOX. THE HOME RUN CABLE IS TERMINATED BY UTS AT THE ORT SERVER FIELD WIRING RACK. LEAVE 10' SLACK LOOP IN ELECTRICAL GUTTER.	Integrator to terminate

FOR NOTES, SEE DATA WIRING SCHEDULE 3.

Date:5/15/2015

Filename: 135_Wiring01.dgn

Scale:

No.	Revision	By	Date

Designed by:

HNTB

CONSULTANT PROJECT MANAGER: R. Bruce Munger, P.E.

	By	Date		By	Date
Designed	RBM	05/15	Checked	RBM	05/15
Drawn	---	05/15	In Charge of	RAL	05/15

HNTB CORPORATION
340 County Road, Suite 6-C
Westbrook, ME 04092
TEL (207) 774-5155
FAX (207) 228-0909

MAINE TURNPIKE

THE GOLD STAR MEMORIAL HIGHWAY

MTA PROJECT MANAGER: William Yates

FALMOUTH SPUR TOLL PLAZA
ORT CONVERSION

ORT DATA WIRING SCHEDULE 1

SHEET NUMBER: E-16

CONTRACT:2015.13

Wiring Shown Below is for one direction of ORT travel only. Duplicate for second ORT direction of travel.

ORT SYSTEMS NETWORK AND DATA WIRING (CONTINUED)

Video Capture and Recognition System (VCARS™)

RISER DIAGRAM NUMBER	WIRE LABEL	DESCRIPTION	WIRE	TO	SIGNAL TYPE	ROUTING INSTRUCTIONS	TERMINATION
150	(ORT#)MSH.FVA	MEDIAN SHOULDER VCARS™ FRONT LICENSE PLATE CAMERA A - GIGABIT DATA	4pr/24AWG CAT-5e Burial Grade	RJ45 Both Ends, From VCARS™ Connector Panel Blue 110 Jack to TipOut Designated 110 Jack	GIGABIT ETHERNET	In Gantry, route the 3 cables before connector attachment to VCARS™ Junction Box. Extend using flexible weathertight conduit to VCARS™ access panel cover. Punch and attach weathertight conduit. Attach end connector (RJ45) each end and test to Gigabit s	Termination by Integrator
151	(ORT#)MSH.FVST	MEDIAN SHOULDER VCARS™ FRONT UNIT CONTROL NETWORK AND TRIGGER		RJ45 Both Ends, From VCARS™ Connector Panel Yellow 110 Jack to Designated Switch Port 110 Jack	10/100 ETHERNET 24V DC SWITCHED		Termination by Integrator
152	(ORT#)MSH.FVB	MEDIAN SHOULDER VCARS™ FRONT LICENSE PLATE CAMERA B - GIGABIT DATA		RJ45 Both Ends, From VCARS™ Connector Panel Red 110 Jack to TipOut Designated 110 Jack	GIGABIT ETHERNET		Termination by Integrator
153	(ORT#)MSH.RVA	MEDIAN SHOULDER VCARS™ REAR LICENSE PLATE CAMERA A - GIGABIT DATA	4pr/24AWG CAT-5e Burial Grade	RJ45 Both Ends, From VCARS™ Connector Panel Blue 110 Jack to TipOut Designated 110 Jack	GIGABIT ETHERNET	In Gantry, route the 3 cables before connector attachment to VCARS™ Junction Box. Extend using flexible weathertight conduit to VCARS™ access panel cover. Punch and attach weathertight conduit. Attach end connector (RJ45) each end and test to Gigabit s	Termination by Integrator
154	(ORT#)MSH.RVST	MEDIAN SHOULDER VCARS™ REAR UNIT CONTROL NETWORK AND TRIGGER		RJ45 Both Ends, From VCARS™ Connector Panel Yellow 110 Jack to Designated Switch Port 110 Jack	10/100 ETHERNET 24V DC SWITCHED		Termination by Integrator
155	(ORT#)MSH.RVB	MEDIAN SHOULDER VCARS™ REAR LICENSE PLATE CAMERA B - GIGABIT DATA		RJ45 Both Ends, From VCARS™ Connector Panel Red 110 Jack to TipOut Designated 110 Jack	GIGABIT ETHERNET		Termination by Integrator
156	(ORT#)L1.FVA	LANE VCARS™ FRONT LICENSE PLATE CAMERA A - GIGABIT DATA	4pr/24AWG CAT-5e Burial Grade	RJ45 Both Ends, From VCARS™ Connector Panel Blue 110 Jack to TipOut Designated 110 Jack	GIGABIT ETHERNET	In Gantry, route the 3 cables before connector attachment to VCARS™ Junction Box. Extend using flexible weathertight conduit to VCARS™ access panel cover. Punch and attach weathertight conduit. Attach end connector (RJ45) each end and test to Gigabit s	Termination by Integrator
157	(ORT#)L1.FVST	LANE VCARS™ FRONT UNIT CONTROL NETWORK AND TRIGGER		RJ45 Both Ends, From VCARS™ Connector Panel Yellow 110 Jack to Designated Switch Port 110 Jack	10/100 ETHERNET 24V DC SWITCHED		Termination by Integrator
158	(ORT#)L1.FVB	LANE VCARS™ FRONT LICENSE PLATE CAMERA B - GIGABIT DATA		RJ45 Both Ends, From VCARS™ Connector Panel Red 110 Jack to TipOut Designated 110 Jack	GIGABIT ETHERNET		Termination by Integrator
159	(ORT#)L1.RVA	LANE VCARS™ REAR LICENSE PLATE CAMERA A - GIGABIT DATA	4pr/24AWG CAT-5e Burial Grade	RJ45 Both Ends, From VCARS™ Connector Panel Blue 110 Jack to TipOut Designated 110 Jack	GIGABIT ETHERNET	In Gantry, route the 3 cables before connector attachment to VCARS™ Junction Box. Extend using flexible weathertight conduit to VCARS™ access panel cover. Punch and attach weathertight conduit. Attach end connector (RJ45) each end and test to Gigabit s	Termination by Integrator
160	(ORT#)L1.RVST	LANE VCARS™ REAR UNIT CONTROL NETWORK AND TRIGGER		RJ45 Both Ends, From VCARS™ Connector Panel Yellow 110 Jack to Designated Switch Port 110 Jack	10/100 ETHERNET 24V DC SWITCHED		Termination by Integrator
161	(ORT#)L1.RVB	LANE VCARS™ REAR LICENSE PLATE CAMERA B - GIGABIT DATA		RJ45 Both Ends, From VCARS™ Connector Panel Red 110 Jack to TipOut Designated 110 Jack	GIGABIT ETHERNET		Termination by Integrator
162	(ORT#)L1.FVA	OUTSIDE SHOULDER VCARS™ FRONT LICENSE PLATE CAMERA A - GIGABIT DATA	4pr/24AWG CAT-5e Burial Grade	RJ45 Both Ends, From VCARS™ Connector Panel Blue 110 Jack to TipOut Designated 110 Jack	GIGABIT ETHERNET	In Gantry, route the 3 cables before connector attachment to VCARS™ Junction Box. Extend using flexible weathertight conduit to VCARS™ access panel cover. Punch and attach weathertight conduit. Attach end connector (RJ45) each end and test to Gigabit s	Termination by Integrator
163	(ORT#)OSH.FVST	OUTSIDE SHOULDER VCARS™ FRONT UNIT CONTROL NETWORK AND TRIGGER		RJ45 Both Ends, From VCARS™ Connector Panel Yellow 110 Jack to Designated Switch Port 110 Jack	10/100 ETHERNET 24V DC SWITCHED		Termination by Integrator
164	(ORT#)OSH.FVB	OUTSIDE SHOULDER VCARS™ FRONT LICENSE PLATE CAMERA B - GIGABIT DATA		RJ45 Both Ends, From VCARS™ Connector Panel Red 110 Jack to TipOut Designated 110 Jack	GIGABIT ETHERNET		Termination by Integrator
165	(ORT#)OSH.RVA	OUTSIDE SHOULDER VCARS™ REAR LICENSE PLATE CAMERA A - GIGABIT DATA	4pr/24AWG CAT-5e Burial Grade	RJ45 Both Ends, From VCARS™ Connector Panel Blue 110 Jack to TipOut Designated 110 Jack	GIGABIT ETHERNET	In Gantry, route the 3 cables before connector attachment to VCARS™ Junction Box. Extend using flexible weathertight conduit to VCARS™ access panel cover. Punch and attach weathertight conduit. Attach end connector (RJ45) each end and test to Gigabit s	Termination by Integrator
166	(ORT#)OSH.RVST	OUTSIDE SHOULDER VCARS™ REAR UNIT CONTROL NETWORK AND TRIGGER		RJ45 Both Ends, From VCARS™ Connector Panel Yellow 110 Jack to Designated Switch Port 110 Jack	10/100 ETHERNET 24V DC SWITCHED		Termination by Integrator
167	(ORT#)OSH.RVB	OUTSIDE SHOULDER VCARS™ REAR LICENSE PLATE CAMERA B - GIGABIT DATA		RJ45 Both Ends, From VCARS™ Connector Panel Red 110 Jack to TipOut Designated 110 Jack	GIGABIT ETHERNET		Termination by Integrator

FOR NOTES, SEE DATA WIRING SCHEDULE 3.

Date:5/15/2015

Filename: 136_Wiring02.dgn

Scale:

No.	Revision	By	Date

Designed by: HNTB

CONSULTANT PROJECT MANAGER: R. Bruce Munger, P.E.

	By	Date		By	Date
Designed	RBM	05/15	Checked	RBM	05/15
Drawn	---	05/15	In Charge of	RAL	05/15

HNTB CORPORATION
340 County Road, Suite 6-C
Westbrook, ME 04092
TEL (207) 774-5155
FAX (207) 228-0909

MAINE TURNPIKE

THE GOLD STAR MEMORIAL HIGHWAY

MTA PROJECT MANAGER: William Yates

FALMOUTH SPUR TOLL PLAZA
ORT CONVERSION

ORT DATA WIRING SCHEDULE 2

SHEET NUMBER: E-17

CONTRACT:2015.13

Wiring Shown Below is for one direction of ORT travel only. Duplicate for second ORT direction of travel.

ORT SYSTEMS NETWORK AND DATA WIRING (CONTINUED)

Automatic Vehicle Identification System (AVI) (Specifications are for Mark IV Reader)

RISER DIAGRAM NUMBER	WIRE LABEL	DESCRIPTION	AWG	COLOR	CORE	JACKET	FROM	TO	TERMINATION
130	ORT(ORT#).AVI.LSH	LEFT SHOULDER AVI ANTENNA RF CABLE	LMR 400	BLACK	SOLID	PVC	ORT AVI READER	LANE ANTENNA ON THE GANTRY	"N" CONNECTOR (MALE)
131	ORT(ORT#).AVI.LSH/L	LEFT SHOULDER/LANE STRADDLE AVI ANTENNA RF CABLE							
132	ORT(ORT#).AVI.LN(#)	TRAVEL LANE AVI ANTENNA RF CABLE							
133	ORT(ORT#).AVI.LN(#)/RSH	LANE/RIGHT SHOULDER STRADDLE AVI ANTENNA RF CABLE							
135	ORT(ORT#).AVI DATA P	AVI SERIAL DATA PRIMARY	4pr/24	N/A	STRANDED	PVC	ORT AVI READER	CORRESPONDING ORT CABINET SERIAL TO ETHERNET AVI SWITCH PORT	Integrator to terminate
136	ORT(ORT#).AVI DATA S	AVI SERIAL DATA SECONDARY	4pr/24	N/A	STRANDED	PVC	ORT AVI READER	OPPOSITE DIRECTION ORT CABINET SERIAL TO ETHERNET AVI SWITCH PORT	Integrator to terminate
137	ORT(ORT#).AVI DATA M	AVI SERIAL DATA MAINTENANCE	4pr/24	N/A	STRANDED	PVC	ORT AVI READER	CORRESPONDING ORT CABINET SERIAL TO ETHERNET AVI SWITCH PORT	Integrator to terminate

Digital Video Audit System (DVAS)

RISER DIAGRAM NUMBER	WIRE LABEL	DESCRIPTION	AWG	COLOR	CORE	JACKET	FROM	TO	TERMINATION
140	ORT#.PPDVAS.NET	ORT PAYPOINT DVAS DATA	4pr/24	BLACK	CAT5e STRANDED	Direct Burial Grade (see Note)	DVAS Camera Housing via Gantry Junction Box (Allow sufficient wire length for flexible conduit extension to camera location)	Server Room Network Switch Port or Patch Panel assigned port/jack	RJ-45 both ends

Wiring Shown Below serves both ORT Zones. (Only one of each cable is required for the project.)

System Synchronization Cables (Only one of each required per system. Do not duplicate for second ORT zone)

RISER DIAGRAM NUMBER	WIRE LABEL	DESCRIPTION	AWG	COLOR	CORE	JACKET	FROM	TO	TERMINATION
170	ORTNB/ORTSB SYNC	IVIS SYNCHRONIZATION CABLE	4pr/24 CAT5e	BLACK	STRANDED	Direct Burial Grade (see Note)	ORT NB CABINET (LEAVE 10' SLACK LOOP in CABINET)	ORT SB CABINET (LEAVE 10' SLACK LOOP IN CABINET)	TERMINATION BY INTEGRATOR
171	ORT NB/ CASHLN8 SYNC	IVIS SYNCHRONIZATION CABLE	4pr/24 CAT5e	BLACK	STRANDED	Direct Burial Grade (see Note)	ORT NB CABINET (LEAVE 10' SLACK LOOP in CABINET)	CASH LANE 8 LANE CONTROLLER CABINET LOCATION	TERMINATION BY INTEGRATOR
172	ORT NB/ORTSB AVI SYNC	MARK IV READER SYNCHRONIZATION CABLE NB ORT TO SB ORT	4pr/24	BLACK	STRANDED	Direct Burial Grade (see Note)	ORT NB AVI READER CABINET (LEAVE 6' SLACK LOOP in CABINET)	ORT SB AVI READER CABINET (LEAVE 6' SLACK LOOP IN CABINET)	TERMINATION BY INTEGRATOR
173	ORT NB/ CASH LN8 SYNC	MARK IV READER SYNCHRONIZATION CABLE NB ORT TO LANE 8	4pr/24	BLACK	STRANDED	Direct Burial Grade (see Note)	ORT NB AVI READER CABINET (LEAVE 6' SLACK LOOP in CABINET)	LANE 8 AVI READER CABINET (LEAVE 6' SLACK LOOP IN CABINET)	TERMINATION BY INTEGRATOR
174	ORT SB/ CASH LN3 SYNC	MARK IV READER SYNCHRONIZATION CABLE SB ORT TO LANE 3	4pr/24	BLACK	STRANDED	Direct Burial Grade (see Note)	ORT NB AVI READER CABINET (LEAVE 6' SLACK LOOP in CABINET)	LANE 3 AVI READER CABINET (LEAVE 6' SLACK LOOP IN CABINET)	TERMINATION BY INTEGRATOR

NOTES:

1) Lane Numbering as shown in plan set. Replace in label with correct lane #.
2) IVIS HOME RUN: THE SENSOR LEADS ARE TO BE TWISTED TIGHT, SOLDERED, SHRINK-WRAPPED (WATERPROOFED) AND ENCLOSED IN A KLIK-IT WIRING DEVICE TO THE IVIS "HOMERUN" CABLE (IMSA 50-2, # 16AWG) AT THE JUNCTION BOX.
3) ALL WIRE INSTALLED IN CONDUIT MUST BE BURIAL GRADE, SUITABLE FOR WET LOCATIONS.
4) LEAVE 3' SLACK LOOPS IN JUNCTION BOXES. LEAVE 6' CABLE AT JUNCTION BOX IF TERMINATION NOT SPECIFIED. FOR FIBER TO EXISTING CASH LANE CONTROLLERS LEAVE 10' OF SLACK LOOPED TO PREPARE FOR FUTURE INSTALLATIONS.
5) Direct Burial cable may not be extended more than 50' exposed into a structure due to fire codes. Check with local fire/electrical code before installing.

Plaza Host Server Equipment Room (Electrician Responsibilities - Includes pull strings, wire, conduit, trays, boxes and termination)

RISER DIAGRAM NUMBER	WIRE LABEL (SOURCE.CIRCUIT.DESTINATION)	DESCRIPTION	AWG or PER CODE	COLOR	CORE	JACKET	VOLTAGE	CIRCUIT BREAKER	FROM	TO	TERMINATION REQUIREMENTS
SERVER RACK PDU (Required when omitting supplied internal server cabinet UPS)											
201	N/A	TRIPPLITE 2430 PDU OR EQUIVALENT PDU WITH MINIMUM 8 OUTLETS (1U, 30A PDU with L5-30P, 15' cable). See Note #3	N/A				120 VAC	30A	L5-30R DEDICATED WALL RECEPTACLE	COMMUNICATIONS/SERVER CABINET REAR PANEL	MOUNT IN SEVER CABINET REAR
60 AMP PANEL SERVING ORT CABINETS											
202	(Panel#) (Ckt #)H1.UPS	POWER(120V-HOT)	#4	BLACK OR PER LOCAL CODE	STRANDED	THHW	240 VAC		SUB-PANEL IN TUNNEL	60 AMP CLEAN POWER SUB-PANEL ASSIGNED CIRCUIT BREAKER	PER LOCAL CODE
203	(Panel#) (Ckt #)H2.UPS	POWER(120V-HOT)		RED OR PER LOCAL CODE							
204	(Panel#) (Ckt #)N.UPS	POWER(120V-NEUTRAL)		WHITE							
205	(Panel#).G	GROUND		GREEN							
206	(Panel#).IG	ISOLATED GROUND	#10	GREEN W/ YELLOW STRIPE							

NOTES:

GENERAL NOTES:	1) WORKSTATION AND LIVE VIEWER STATION, MISC PRINTER POWER WILL UTILIZE EXISTING 120V WALL OUTLETS IN PLAZA BUILDING
	2) Electrical installer to provide and install panels, breakers, disconnects, outlets, wire, conduit, junction boxes noted above.
	3) Deleting the UTS supplied UPS requires installation of a 30A PDU with L5-30P, not supplied by UTS. Cabinet Power Monitoring Function will not be available with PDU.
LABELING NOTES:	(Panel#) (Ckt #) will have to be replaced with the Panel ID and circuit/breaker number that this wire is connected to.

Wiring Shown is for one direction of travel only. Duplicate for second ORT direction of travel.

ORT ZONE EQUIPMENT ROOM (Electrician Responsibilities - Includes pull strings, wire, conduit, trays, boxes and termination)

RISER DIAGRAM NUMBER	WIRE LABEL (SOURCE.CIRCUIT.DESTINATION)	DESCRIPTION	AWG or PER CODE	COLOR	CORE	JACKET	VOLTAGE	CIRCUIT BREAKER	FROM	TO	TERMINATION REQUIREMENTS
ORT (Lane Equipment) (APC 3000) RECEPTACLE (3ea 20A circuits to individual Quad Outlet Boxes mounted in ORT cabinet)											
210	(Panel#) (Ckt #)H.ORT(#)Q1	ORT TIPOUT 1-4 DEDICATED RECEPTACLE POWER(120V-HOT)	#12	BLACK OR PER LOCAL CODE	STRANDED	THHW	120 VAC	20A	CLEAN POWER SUBPANEL ASSIGNED CIRCUIT BREAKER	ORT CABINET 1 QUAD OUTLET#1	STANDARD QUAD OUTLET WITH RECEPTACLES COLOR CODED FOR CLEAN POWER
211	(Panel#) (Ckt #)N.ORT(#)Q1	ORT TIPOUT 1-4 DEDICATED RECEPTACLE POWER(120V-NEUTRAL)		WHITE							
212	(Panel#).G	GROUND		GREEN							
213	(Panel#) (Ckt #)H.ORT(#)Q2	ORT TIPOUT 5-6 DEDICATED RECEPTACLE POWER(120V-HOT)	#12	BLACK OR PER LOCAL CODE	STRANDED	THHW	120 VAC	20A	CLEAN POWER SUBPANEL ASSIGNED CIRCUIT BREAKER	ORT CABINET 1 QUAD OUTLET#2	STANDARD QUAD OUTLET WITH RECEPTACLES COLOR CODED FOR CLEAN POWER
214	(Panel#) (Ckt #)N.ORT(#)Q2	ORT TIPOUT 5-6 AND SWITCH DEDICATED RECEPTACLE POWER(120V-NEUTRAL)		WHITE							
215	(Panel#).G	GROUND		GREEN							
216	(Panel#) (Ckt #)H.ORT(#)Q3	ACCESSORY/FANS RECEPTACLE POWER(120V-HOT)	#12	BLACK OR PER LOCAL CODE	STRANDED	THHW	120 VAC	20A	CLEAN POWER SUBPANEL ASSIGNED CIRCUIT BREAKER	ORT CABINET 1 QUAD OUTLET#3	STANDARD QUAD OUTLET WITH RECEPTACLES COLOR CODED FOR CLEAN POWER
217	(Panel#) (Ckt #)N.ORT(#)Q3	ACCESSORY/FANS DEDICATED RECEPTACLE POWER(120V-NEUTRAL)		WHITE							
218	(Panel#).G	GROUND		GREEN							

NOTES:

	1) Electrical installer to provide and install outlets, wire, conduit, junction boxes noted above.
	2) Lane Server Power Ground (Pin 3 of TipOut connector) should be an isolated ground from plaza UPS Electrical Distribution Panel to avoid electrical noise getting into power distribution. A separate ground is suggested for electrical safety to connect
LABELING NOTES:	(Panel#) (Ckt #) will have to be replaced with the Panel ID and circuit/breaker number that this wire is connected to. (#) is to be replaced with ORT NB or SB or ORT designator as assigned.

Date:5/15/2015

Filename: 138_Wiring04.dgn

Scale:

No.	Revision	By	Date

Designed by: HNTB

CONSULTANT PROJECT MANAGER: R. Bruce Munger, P.E.

	By	Date		By	Date
Designed	RBM	05/15	Checked	RBM	05/15
Drawn	---	05/15	In Charge of	RAL	05/15

HNTB CORPORATION
340 County Road, Suite 6-C
Westbrook, ME 04092
TEL (207) 774-5155
FAX (207) 228-0909

MAINE TURNPIKE

THE GOLD STAR MEMORIAL HIGHWAY

MTA PROJECT MANAGER: William Yates

FALMOUTH SPUR TOLL PLAZA
ORT CONVERSION

ORT POWER WIRING SCHEDULE 1

SHEET NUMBER: E-19

CONTRACT:2015.13

Wiring Shown is for one direction of travel only. Duplicate for second ORT direction of travel.

MEDIAN SHOULDER ORT LANE TYPE GANTRY POWER WIRING SCHEDULE (Electrician Responsibilities - Includes pull strings, wire, conduit, trays, boxes and termination)

RISER DIAGRAM NUMBER	WIRE LABEL (SOURCE.CIRCUIT.DESTINATION)	DESCRIPTION	MIN AWG *1	COLOR	CORE	JACKET	VOLTAGE	CIRCUIT BREAKER	FROM	TO	TERMINAL #	TERMINATION REQUIREMENTS
FRONT VCARS™												
220	(Panel#) (Ckt #).(ORT#)FVLMS	FRONT VCARS™ POWER (HOT, NON-SWITCHED)	14	BLACK OR PER LOCAL CODE	STRANDED	THHW or SOW	120 VAC	15	CLEAN (UPS) POWER DISTRIBUTION PANEL CIRCUIT BREAKER	VCARS™ FIELD WIRING TERMINATION CONNECTOR	V1-1	6X6X4 JUNCTION BOX WITH 6' of 1/2" LIQUID TIGHT FLEX CABLE TO VCARS™ LOCATION. LEAVE 8' SLACK IN BOX
221	(Panel#)-.N.(ORT#)FVLMS	FRONT VCARS™ POWER (NEUTRAL)		WHITE							V1-2	
222	(Panel#).IG.(ORT#)FVLMS	FRONT VCARS™ POWER (EQUIPMENT/FACILITY GROUND)		GREEN							V1-3	
223	(Panel#).G.(ORT#)FVLMS	FRONT VCARS™ POWER (ISOLATED (UPS) GROUND)		GREEN W/ YELLOW STRIPE							V1-4	
REAR VCARS™												
224	(Panel#) (Ckt #).(ORT#)RVLMS	REAR VCARS™ POWER (HOT, NON-SWITCHED)	14	BLACK OR PER LOCAL CODE	STRANDED	THHW or SOW	120 VAC	15	CLEAN (UPS) POWER DISTRIBUTION PANEL CIRCUIT BREAKER	VCARS™ FIELD WIRING TERMINATION CONNECTOR	V1-1	6X6X4 JUNCTION BOX WITH 6' of 1/2" LIQUID TIGHT FLEX CABLE TO VCARS™ LOCATION. LEAVE 8' SLACK IN BOX
225	(Panel#)-.N.(ORT#)RVLMS	REAR VCARS™ POWER (NEUTRAL)		WHITE							V1-2	
226	(Panel#).IG.(ORT#)RVLMS	REAR VCARS™ POWER (FACILITY GROUND)		GREEN							V1-3	
227	(Panel#).G.(ORT#)RVLMS	REAR VCARS™ POWER (UPS ISOLATED GROUND)		GREEN W/ YELLOW STRIPE							V1-4	
LANE DIGITAL VIDEO AND AUDIT CAMERA (DVAS)												
250	(Panel#).H.(ORT#)PPDLMS	LANE DVAS PAYPOINT CAMERA ENCLOSURE POWER (HOT - NON-SWITCHED)	14	BLACK OR PER LOCAL CODE	STRANDED	THHW or SOW	120 VAC	15	CLEAN (UPS) POWER DISTRIBUTION PANEL CIRCUIT BREAKER	DVAS CAMERA VIA POWER JUNCTION BOX	AC	6X6X4 JUNCTION BOX WITH 6' of 1/2" LIQUID TIGHT FLEX CABLE TO CAMERA LOCATION. LEAVE 8' SLACK IN BOX
251	(Panel#).N.(ORT#)PPDLMS	LANE DVAS PAYPOINT CAMERA ENCLOSURE POWER (NEUTRAL)		WHITE						INSTALL 3A IN-LINE FUSE, EXTERNAL BELL SWITCH AND TRANSITION TO #14AWG FROM BOX TO CAMERA	IN	
252	(Panel#).G.(ORT#)PPDLMS	LANE DVAS PAYPOINT CAMERA ENCLOSURE POWER (GROUND)		GREEN							Case Gnd Lug Only*/2	

LANE 1 ORT LANE TYPE GANTRY POWER WIRING SCHEDULE

RISER DIAGRAM NUMBER	WIRE LABEL (SOURCE.CIRCUIT.DESTINATION)	DESCRIPTION	MIN AWG *1	COLOR	CORE	JACKET	VOLTAGE	CIRCUIT BREAKER	FROM	TO	TERMINAL #	TERMINATION REQUIREMENTS
FRONT VCARS™												
228	(Panel#) (Ckt #).FVL1	FRONT VCARS™ POWER (HOT, NON-SWITCHED)	14	BLACK OR PER LOCAL CODE	STRANDED	THHW or SOW	120 VAC	15	CLEAN (UPS) POWER DISTRIBUTION PANEL CIRCUIT BREAKER	VCARS™ FIELD WIRING TERMINATION CONNECTOR	V1-1	6X6X4 JUNCTION BOX WITH 6' of 1/2" LIQUID TIGHT FLEX CABLE TO VCARS™ LOCATION. LEAVE 8' SLACK IN BOX
229	(Panel#)-.N.FVL1	FRONT VCARS™ POWER (NEUTRAL)		WHITE							V1-2	
230	(Panel#).IG.FVL1	FRONT VCARS™ POWER (EQUIPMENT/FACILITY GROUND)		GREEN							V1-3	
231	(Panel#).G.FVL1	FRONT VCARS™ POWER (ISOLATED (UPS) GROUND)		GREEN W/ YELLOW STRIPE							V1-4	
REAR VCARS™												
232	(Panel#) (Ckt #).RVL1	REAR VCARS™ POWER (HOT, NON-SWITCHED)	14	BLACK OR PER LOCAL CODE	STRANDED	THHW or SOW	120 VAC	15	CLEAN (UPS) POWER DISTRIBUTION PANEL CIRCUIT BREAKER	VCARS™ FIELD WIRING TERMINATION CONNECTOR	V1-1	6X6X4 JUNCTION BOX WITH 6' of 1/2" LIQUID TIGHT FLEX CABLE TO VCARS™ LOCATION. LEAVE 8' SLACK IN BOX
233	(Panel#)-.N.RVL1	REAR VCARS™ POWER (NEUTRAL)		WHITE							V1-2	
234	(Panel#).IG.RVL1	REAR VCARS™ POWER (FACILITY GROUND)		GREEN							V1-3	
235	(Panel#).G.RVL1	REAR VCARS™ POWER (UPS ISOLATED GROUND)		GREEN W/ YELLOW STRIPE							V1-4	

FOR NOTES, SEE POWER WIRING SCHEDULE 3.

Date:5/15/2015

Filename: 139_Wiring05.dgn

Scale:

No.	Revision	By	Date

Designed by: HNTB

CONSULTANT PROJECT MANAGER: R. Bruce Munger, P.E.

	By	Date		By	Date
Designed	RBM	05/15	Checked	RBM	05/15
Drawn	---	05/15	In Charge of	RAL	05/15

HNTB CORPORATION
340 County Road, Suite 6-C
Westbrook, ME 04092
TEL (207) 774-5155
FAX (207) 228-0909

MAINE TURNPIKE

THE GOLD STAR MEMORIAL HIGHWAY

MTA PROJECT MANAGER: William Yates

FALMOUTH SPUR TOLL PLAZA
ORT CONVERSION

ORT POWER WIRING SCHEDULE 2

SHEET NUMBER: E-20

CONTRACT:2015.13

Wiring Shown is for one direction of travel only. Duplicate for second ORT direction of travel.

OUTSIDE SHOULDER ORT LANE TYPE GANTRY POWER WIRING SCHEDULE

RISER DIAGRAM NUMBER	WIRE LABEL (SOURCE.CIRCUIT.DESTINATION)	DESCRIPTION	MIN AWG *1	COLOR	CORE	JACKET	VOLTAGE	CIRCUIT BREAKER	FROM	TO	TERMINAL #	TERMINATION REQUIREMENTS
FRONT VCARS™												
236	(Panel#) (Ckt #).FVLMS	FRONT VCARS™ POWER (HOT, NON-SWITCHED)	14	BLACK OR PER LOCAL CODE	STRANDED	THHW or SOW	120 VAC	15	CLEAN (UPS) POWER DISTRIBUTION PANEL CIRCUIT BREAKER	VCARS™ FIELD WIRING TERMINATION CONNECTOR	V1-1	6X6X4 JUNCTION BOX WITH 6' of 1/2" LIQUID TIGHT FLEX CABLE TO VCARS™ LOCATION. LEAVE 8' SLACK IN BOX
237	(Panel#)-.N.FVLMS	FRONT VCARS™ POWER (NEUTRAL)		WHITE							V1-2	
238	(Panel#).IG.FVLMS	FRONT VCARS™ POWER (EQUIPMENT/FACILITY GROUND)		GREEN							V1-3	
239	(Panel#).G.FVLMS	FRONT VCARS™ POWER (ISOLATED (UPS) GROUND) *see note 2		GREEN W/ YELLOW STRIPE							V1-4	
REAR VCARS™												
240	(Panel#) (Ckt #).RVOSH	REAR VCARS™ POWER (HOT, NON-SWITCHED)	14	BLACK OR PER LOCAL CODE	STRANDED	THHW or SOW	120 VAC	15	CLEAN (UPS) POWER DISTRIBUTION PANEL CIRCUIT BREAKER	VCARS™ FIELD WIRING TERMINATION CONNECTOR	V1-1	6X6X4 JUNCTION BOX WITH 6' of 1/2" LIQUID TIGHT FLEX CABLE TO VCARS™ LOCATION. LEAVE 8' SLACK IN BOX
241	(Panel#)-.N.RVOSH	REAR VCARS™ POWER (NEUTRAL)		WHITE							V1-2	
242	(Panel#).IG.RVOSH	REAR VCARS™ POWER (FACILITY GROUND)		GREEN							V1-3	
243	(Panel#).G.RVOSH	REAR VCARS™ POWER (UPS ISOLATED GROUND)		GREEN W/ YELLOW STRIPE							V1-4	

SPACE FRAME LIGHTING POWER WIRING SCHEDULE

RISER DIAGRAM NUMBER	WIRE LABEL (SOURCE.CIRCUIT.DESTINATION)	DESCRIPTION	MIN AWG *1	COLOR	CORE	JACKET	VOLTAGE	CIRCUIT BREAKER	FROM	TO	TERMINATION REQUIREMENTS
SPACE FRAME LIGHTING											
260	(Panel#) (Ckt #).LHT	SPACE FRAME LIGHTING POWER (HOT, NON-SWITCHED)	12	BLACK OR PER LOCAL CODE	STRANDED	THHN	120 VAC	20A	DIRTY POWER PANEL IN TUNNEL SERVING CASH LANE 8	LED LIGHTING FIXUTRES IN CANOPY	ACCORDING TO MANUFACTURERS RECOMMENDATION
261	(Panel#)-.N.LHT	SPACE FRAME LIGHTING POWER (NEUTRAL)		WHITE							
262	(Panel#).G.LHT	SPACE FRAME LIGHTING POWER (GROUND)		GREEN							

AVI READER POWER WIRING SCHEDULE

RISER DIAGRAM NUMBER	WIRE LABEL (SOURCE.CIRCUIT.DESTINATION)	DESCRIPTION	MIN AWG *1	COLOR	CORE	JACKET	VOLTAGE	CIRCUIT BREAKER	FROM	TO	TERMINATION REQUIREMENTS
AVI BADGER READER™											
270	(Panel#) (Ckt #).AVI	AVI READER POWER (HOT, NON-SWITCHED)	14	BLACK OR PER LOCAL CODE	STRANDED	THHW or SOW	120 VAC	15	CLEAN (UPS) POWER DISTRIBUTION PANEL CIRCUIT BREAKER	QUAD OUTLET BOX IN AVI READER CABINET	ACCORDING TO MANUFACTURERS RECOMMENDATION
271	(Panel#)-.N.AVI	AVI READER POWER (NEUTRAL)		WHITE							
272	(Panel#).IG.AVI	AVI READER POWER (EQUIPMENT/FACILITY GROUND)		GREEN							
273	(Panel#).G.AVI	AVI READER POWER (ISOLATED (UPS) GROUND)		GREEN W/ YELLOW STRIPE							
274	(Panel#).Dirty Power	15A DUPLEX RECEPT. FOR SI UTILITY		GREEN W/ YELLOW STRIPE							

NOTES:

GENERAL NOTES:	1) Wire to be sized and colored according to local codes and breaker current limits. VCARS™ requires 10A service minimum. Breakers and Wire Size Shown is typical.
	2) Power Ground to VCARS™ should be an isolated ground from plaza UPS electrical distribution panel to avoid electrical noise getting into power distribution. A separate ground is suggested for electrical safety.
LABELING NOTES:	Label format identifies: Source Device-Connector-(Pin) . (Hot, Neutral, Ground, Isolated Ground).Destination Device-Connector-(Pin)

Date:5/15/2015

Filename: 140_Wiring06.dgn

Scale:

No.	Revision	By	Date

Designed by:

HNTB

CONSULTANT PROJECT MANAGER: R. Bruce Munger, P.E.

	By	Date		By	Date
Designed	RBM	05/15	Checked	RBM	05/15
Drawn	---	05/15	In Charge of	RAL	05/15

HNTB CORPORATION
340 County Road, Suite 6-C
Westbrook, ME 04092
TEL (207) 774-5155
FAX (207) 228-0909

MAINE TURNPIKE

THE GOLD STAR MEMORIAL HIGHWAY

MTA PROJECT MANAGER: William Yates

FALMOUTH SPUR TOLL PLAZA
ORT CONVERSION

ORT POWER WIRING SCHEDULE 3

SHEET NUMBER: E-21

CONTRACT:2015.13

Date:5/15/2015

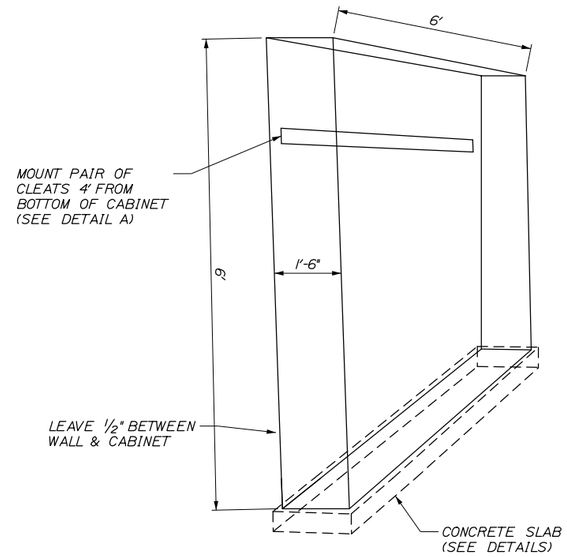

EASTBOUND & WESTBOUND ORT CONTROL CABINET

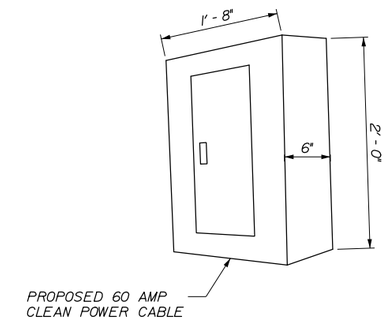

60 AMP CLEAN POWER PANEL BOARD

NOTES:

1. FINAL LOCATIONS OF ORT CABINETS AND 60 AMP CLEAN POWER PANEL BOARD SHALL BE DETERMINED BY THE RESIDENT.
2. PROPOSED CONDUIT AND WIREWAYS ARE NOT SHOWN. SEE ELECTRICAL DETAILS.
3. CONTRACTOR SHALL MOVE TRANSCORE PROVIDED ORT CONTROL CABINETS DURING PHASE 3 WHEN TUNNEL ACCESS IS AVAILABLE THROUGH END OF TUNNEL. EACH CABINET WILL CONTAIN SENSITIVE TOLLING EQUIPMENT AND WILL WEIGH AN ESTIMATED 900 POUNDS. THIS SHALL BE INCIDENTAL TO ITEM 655.01, MOUNTING AND INSTALLATION OF ORT LANE CONTROLLER CABINET.
4. CONSTRUCTION OF CONCRETE SLAB, MOVING ORT CABINETS TO FINAL LOCATIONS AND SECURING CABINETS WITH CLEATS TO TUNNEL WALL SHALL BE INCIDENTAL TO ITEM 655.01, MOUNTING AND INSTALLATION OF ORT LANE CONTROLLER CABINET.
5. THE CONTRACTOR SHALL PROTECT ORT CABINETS FROM DAMAGE.
6. TRANSCORE SHALL PROVIDE CONTRACTOR A PAIR OF CLEATS FOR EACH ORT CABINET. CLEATS WILL HAVE FIVE 3/8" HOLES PREDRILLED. CONTRACTOR SHALL ATTACH CLEATS TO TUNNEL WALL AND ORT CABINET BY METHOD APPROVED BY RESIDENT. SCREWS, BOLTS AND NUTS SHALL BE GALVANIZED.
7. 4 STAINLESS STEEL HILTI BOLTS MAY BE SUBSTITUTED FOR CLEATS AS APPROVED BY THE RESIDENT.
8. ORT CABINET PROVIDED BY OTHERS.

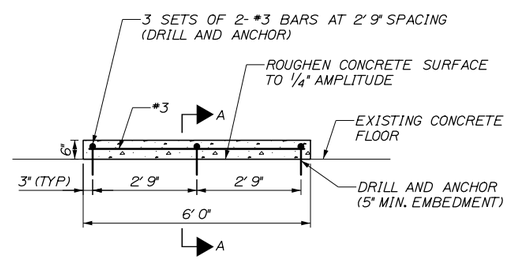

ELEVATION

NOTE: ALL CORNERS SHALL BE CHAMFERED 3/4".

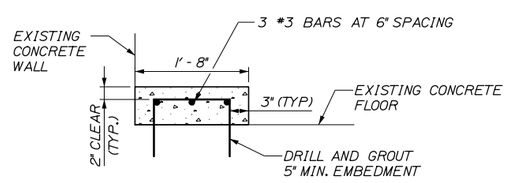

SECTION A-A

CONCRETE SLAB DETAILS

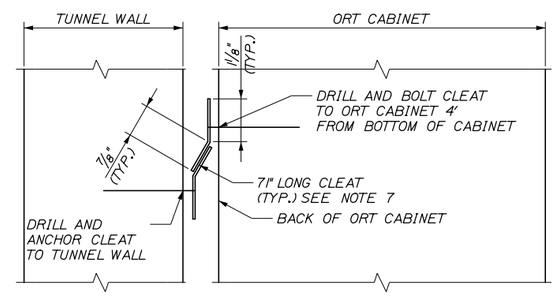

DETAIL A
ORT CABINET CLEATS

Filename: 141_Cabinet Locations.dgn

Scale:			
No.	Revision	By	Date

Designed by:

HNTB

CONSULTANT PROJECT MANAGER: R. Bruce Munger, P.E.

	By	Date		By	Date
Designed	LB	05/15	Checked	JC	05/15
Drawn	GLS	05/15	In Charge of	RAL	05/15

HNTB CORPORATION
340 County Road, Suite 6-C
Westbrook, ME 04092
TEL (207) 774-5155
FAX (207) 228-0909

MAINE TURNPIKE

THE GOLD STAR MEMORIAL HIGHWAY

MTA PROJECT MANAGER: William Yates

FALMOUTH SPUR TOLL PLAZA
ORT CONVERSION

ORT CONTROL CABINET DETAILS

SHEET NUMBER: E-22

CONTRACT:2015.13

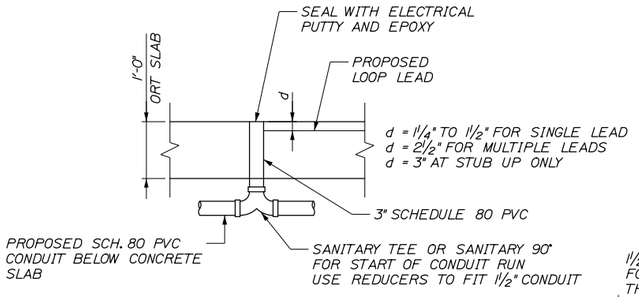

STUB UP IN ORT SLAB
SECTION VIEW

NOTE: SEALING STUB-UPS SHALL BE INCIDENTAL TO THE PVC PAY ITEM.

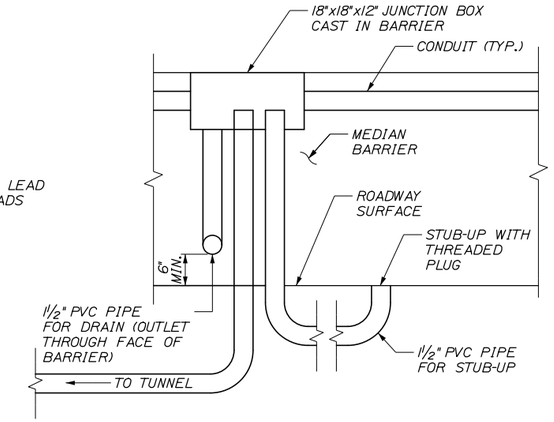

NOTE:
1. JUNCTION BOX MUST BE FLUSH WITH TOP OF BARRIER AND HAVE ACCESS FROM TOP.
2. SEE PLANS FOR NUMBER, SIZE AND TYPE OF CONDUIT.

CONDUIT ENTERING JUNCTION BOX
IN MEDIAN BARRIER

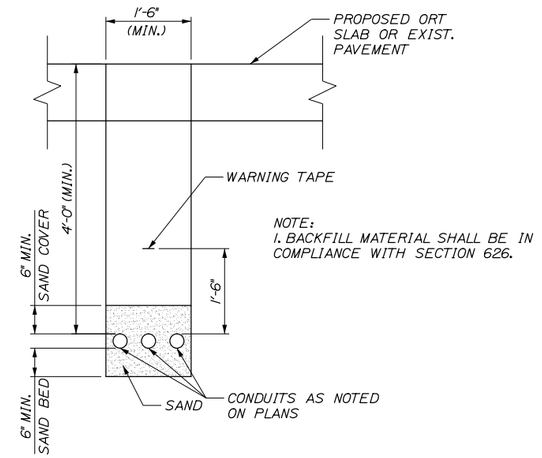

NOTE:
1. BACKFILL MATERIAL SHALL BE IN COMPLIANCE WITH SECTION 626.

CONDUIT TRENCH
SECTION VIEW

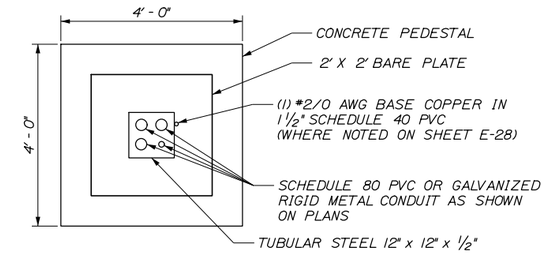

NOTE: CONDUITS EXTEND 6" MAX. ABOVE SPACE FRAME PEDESTAL. WIRING CONTINUES THROUGH TUBE STEEL.

SPACEFRAME COLUMN
PLAN VIEW

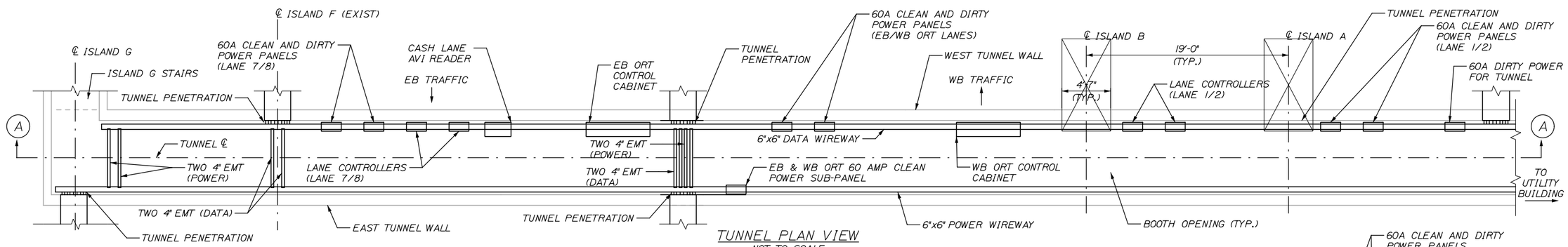

TUNNEL PLAN VIEW
NOT TO SCALE

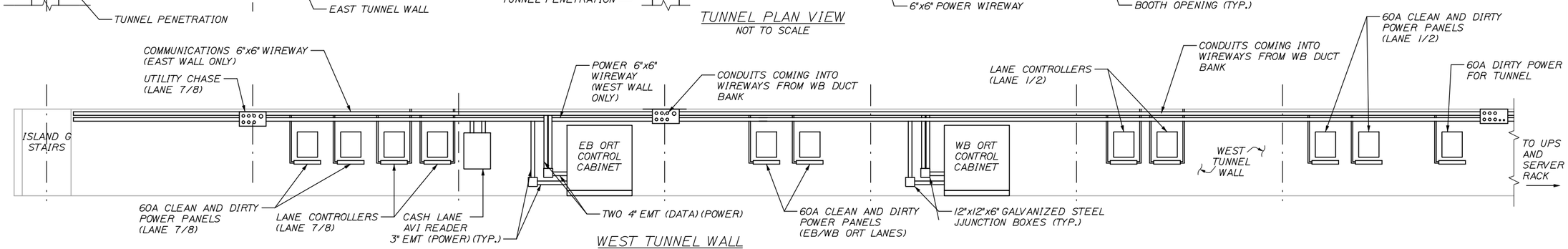

WEST TUNNEL WALL
ELEVATION A-A
NOT TO SCALE

ELECTRICAL NOTES:

1. CLEAN POWER PANEL LANES 1 AND 2: FEED WIRING SHALL BE 3 AWG #4, 1 AWG #6 GROUND CONNECTED TO A NEW 60A/2P CIRCUIT BOARD IN EXISTING UPS PANEL.
2. CLEAN POWER PANEL LANES 7 AND 8: FEED WIRING SHALL BE 3 AWG #4, 1 AWG #6 GROUND CONNECTED TO A NEW 60A/2P CIRCUIT BOARD IN EXISTING UPS PANEL.
3. CLEAN POWER PANEL ORT EB AND WB: FEED WIRING SHALL BE: 3 AWG #4, 1 AWG #6 GROUND CONNECTED TO A NEW 60A/2P CIRCUIT BOARD IN EXISTING UPS PANEL.
4. DIRTY POWER PANEL LANES 1 AND 2: FEED WIRING SHALL BE: 3 AWG #4, 1 AWG #6 GROUND CONNECTED TO A NEW 60A/2P CIRCUIT BOARD IN EXISTING HP-2 PANEL.
5. DIRTY POWER PANEL LANES 7 AND 8: FEED WIRING SHALL BE: 3 AWG #4, 1 AWG #6 GROUND CONNECTED TO A NEW 60A/2P CIRCUIT BOARD IN EXISTING HP-2 PANEL.
6. DIRTY POWER PANEL ORT EB AND WB: FEED WIRING SHALL BE: 3 AWG #4, 1 AWG #6 GROUND CONNECTED TO A NEW 60A/2P CIRCUIT BOARD IN EXISTING HP-2 PANEL.
7. ALL WIRING SHALL BE ENCLOSED IN PROPOSED TUNNEL WIRE WAYS OR PROPOSED CONDUITS TO CASH OR ORT LANES.

NOTES:

1. LOCATIONS OF PROPOSED COMPONENTS SHOWN ARE APPROXIMATE AND FINAL LOCATIONS OF PROPOSED EQUIPMENT SHALL BE APPROVED BY THE RESIDENT.
2. COMPONENTS NECESSARY FOR ATTACHING POWER PANEL, JUNCTION BOXES, CONDUIT AND WIREWAYS TO TUNNEL WALL AND ROOF ARE INCIDENTAL TO THE ITEM.
3. COMPONENTS NECESSARY FOR ATTACHING CONDUITS AND WIREWAYS TO JUNCTION BOXES, CABINETS AND THE POWER PANEL ARE INCIDENTAL TO THE CONDUIT AND WIREWAYS.
4. ALL TUNNEL WIREWAYS SHALL BE HEAVY DUTY PVC.
5. LOCATIONS FOR CABINETS AND PANELS ARE APPROXIMATE. FINAL LOCATION SHALL BE APPROVED BY THE RESIDENT AND THE MTA.

Scale:

No.	Revision	By	Date

Designed by: HNTB

CONSULTANT PROJECT MANAGER: R. Bruce Munger, P.E.

	By	Date		By	Date
Designed	RBM	05/15	Checked	ERB	05/15
Drawn	RBM	05/15	In Charge of	RAL	05/15

HNTB CORPORATION
340 County Road, Suite 6-C
Westbrook, ME 04092
TEL (207) 774-5155
FAX (207) 228-0909

MAINE TURNPIKE
THE GOLD STAR MEMORIAL HIGHWAY

MTA PROJECT MANAGER: William Yates

FALMOUTH SPUR TOLL PLAZA
ORT CONVERSION

ELECTRICAL DETAILS 1

SHEET NUMBER: E-23

CONTRACT: 2015.13

Date: 5/15/2015
Filename: 142_ElectricalDetails 1.DGN

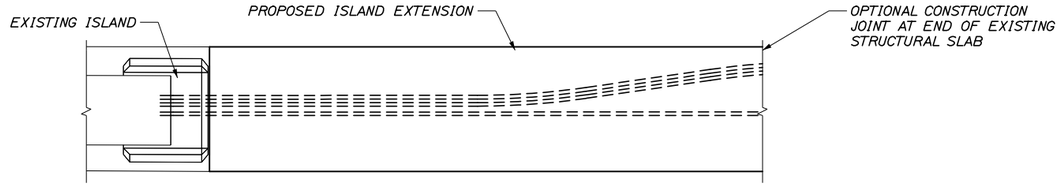

PLAN VIEW

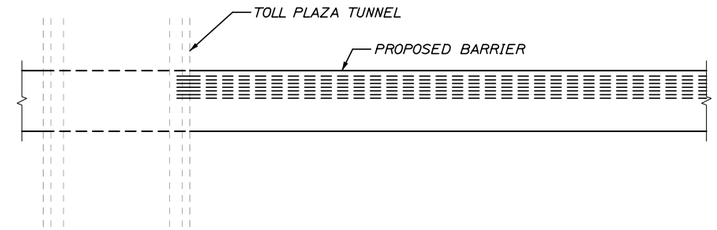

PLAN VIEW

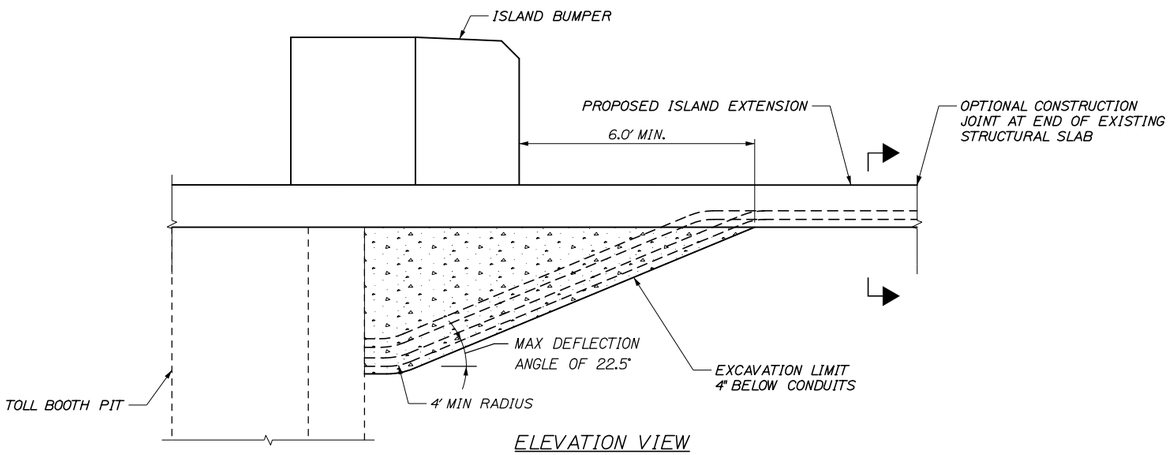

ELEVATION VIEW

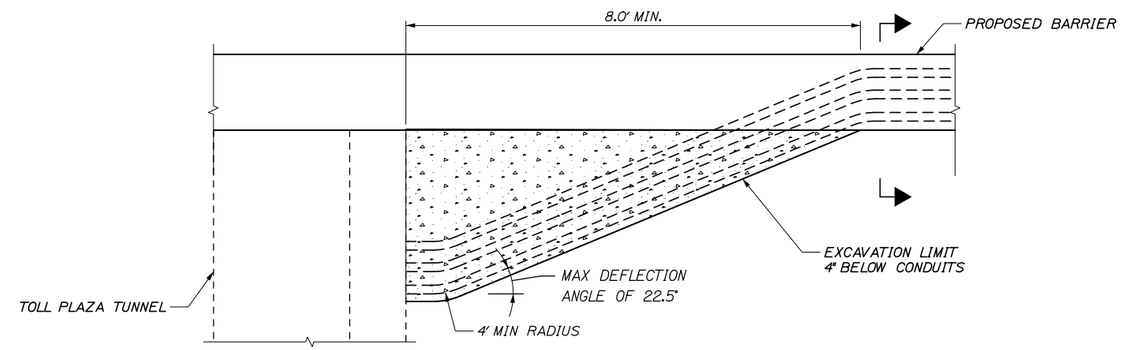

ELEVATION VIEW

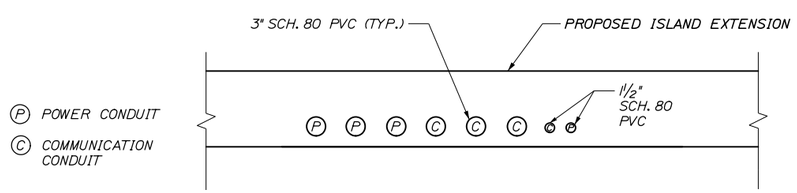

SECTION VIEW
FALMOUTH SPUR ISLAND EXTENSION CONDUIT SWEEP DETAIL
PROPOSED ISLAND EXTENSION
(NOT TO SCALE)

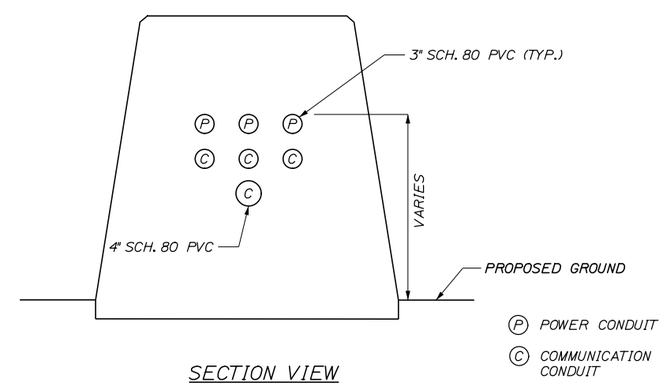

SECTION VIEW
FALMOUTH SPUR MEDIAN BARRIER CONDUIT SWEEP DETAIL
PROPOSED BARRIER
(NOT TO SCALE)

ISLAND EXTENSION NOTES:

1. HORIZONTAL SPACING BETWEEN CONDUITS SHALL BE 3" MIN. CLEARANCE FROM EDGE OF ISLAND EXTENSION SHALL BE 3".
2. DEPTH OF CONDUIT VARIES AT THE TUNNEL PENETRATION TO ENCASEMENT IN THE ISLAND EXTENSION.
3. CONDUIT INSTALLED IN THE ISLAND EXTENSION SLAB SHALL BE INSTALLED SIDE BY EACH.
4. SEE SPECIFICATION 655 CONCRETE INCASTED CONDUIT.

BARRIER NOTES:

1. CONDUIT CONFIGURATION RUN IN CONCRETE BARRIER SHALL BE FIELD DETERMINED.

Date:5/15/2015

Date:5/15/2015

Filename: 143_Conduit Detail.DGN

Scale:			
No.	Revision	By	Date

Designed by:

HNTB

CONSULTANT PROJECT MANAGER: R. Bruce Munger, P.E.

	By	Date		By	Date
Designed	LB	05/15	Checked	JC	05/15
Drawn	MPC	05/15	In Charge of	RAL	05/15

HNTB CORPORATION
340 County Road, Suite 6-C
Westbrook, ME 04092
TEL (207) 774-5155
FAX (207) 228-0909

MAINE TURNPIKE

THE GOLD STAR MEMORIAL HIGHWAY

MTA PROJECT MANAGER: William Yates

FALMOUTH SPUR TOLL PLAZA
ORT CONVERSION

CONDUIT DETAIL

SHEET NUMBER: E-24

CONTRACT:2015.13

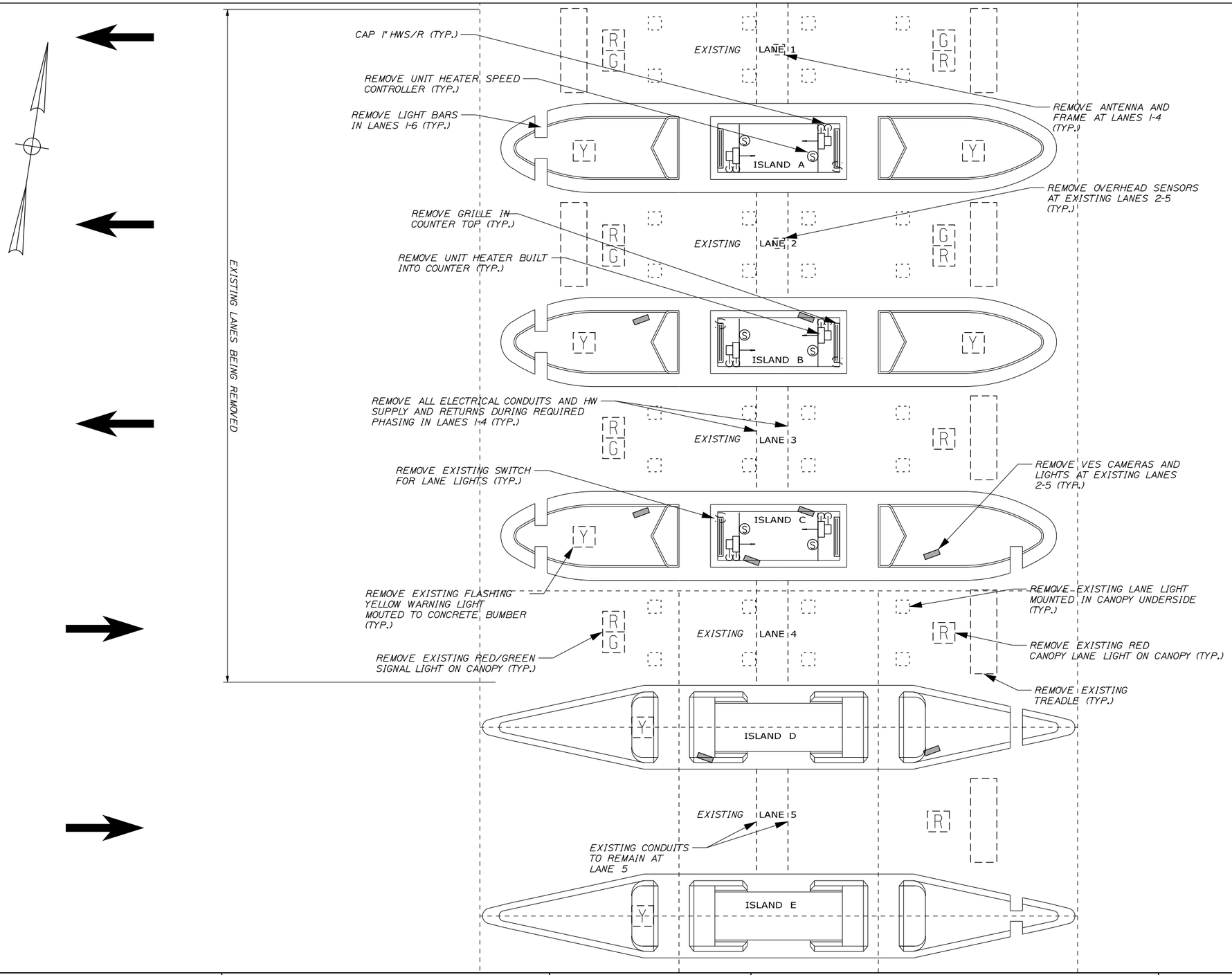

NOTES:

1. BEFORE ELECTRICAL AND MECHANICAL DEMOLITION, CONTRACTOR SHALL SUBMIT A DEMOLITION PLAN TO THE RESIDENT FOR APPROVAL.

2. DEMOLITION CANNOT BEGIN WITHOUT APPROVAL FROM THE AUTHORITY, THE SYSTEM INTEGRATOR, AND THE RESIDENT.

3. REFER TO THE GENERAL NOTES FOR SALVAGE AND DISPOSAL INSTRUCTIONS OF SPECIFIC ITEMS. ITEMS TO BE DISPOSED OF MUST BE DONE SO IN A LEGAL LAWFUL MANNER BY THE CONTRACTOR.

4. REMOVE ALL EXISTING EQUIPMENT TO BE SALVAGED, DISPOSED OF AND/OR RELOCATED AS DIRECTED BY THE RESIDENT OR INDICATED ON THE DRAWINGS.

5. EQUIPMENT TO BE SALVAGED SHALL BE CAREFULLY PACKED AND DELIVERED TO THE SIGN SHOP OR TRANSCORE'S WAREHOUSE AS DESCRIBED IN THE GENERAL NOTES.

6. ANY EXISTING WORK DISTURBED OR DAMAGED BY THE ALTERATIONS OR NEW WORK SHALL BE REPAIRED OR REPLACED TO THE RESIDENT'S AND AUTHORITY'S SATISFACTION AT NO ADDED COST TO THE AUTHORITY AND DISPOSED OF IN A LEGAL LAWFUL MANNER BY THE CONTRACTOR.

7. ANY EXISTING WIRING AND CONDUIT DISCONTINUED UNDER THIS PROJECT SHALL BE COMPLETELY REMOVED AND BECOME THE PROPERTY OF THE CONTRACTOR.

8. SEE ELECTRICAL DETAILS FOR EQUIPMENT IN TUNNEL.

9. PRIOR TO DEMO OF ALL EXISTING ISLANDS THE CONTRACTOR SHALL VERIFY ALL COMMUNICATION AND POWER LINES IN PLAZA ROOF COLUMNS FOR ALL ISLANDS. THE CONTRACTOR SHALL SUBMIT FOR REVIEW A LINE DIAGRAM OF ALL DATA, POWER AND COLUMNS SHOWING ORIGIN AND DESTINATION. LINES ASSOCIATED WITH EQUIPMENT TO REMAIN (INCLUDING EQUIPMENT REQUIRED TO BE OPERATING FOR INTERMEDIATE PHASES OF CONSTRUCTION) SHALL BE RE-ROUTED. THIS WORK SHALL BE COORDINATED WITH THE RESIDENT AND THE SYSTEM INTEGRATOR. WORK ASSOCIATED WITH VERIFICATION AND SUBMITTAL REVIEW SHALL BE INCIDENTAL TO ITEM 800.10. WORK ASSOCIATED WITH RE-ROUTING WIRES WILL BE PAID FOR BY THE INDIVIDUAL LABOR AND MATERIAL PAY ITEMS.

10. NOT SHOWN: REMOVE LANE CONTROLLER CABINETS, TRANSFORMER BOXES AND COS BOX IN APPROPRIATE PHASES. SEE SPECIFICATIONS FOR MORE INFORMATION.

11. LOCATION AND NUMBER OF UNDERGROUND CONDUITS ARE APPROXIMATE. DIG SAFE/DIG SMART TO BE CONTACTED TO LOCATE UNDERGROUND UTILITIES PRIOR TO DEMOLITION.

12. CLEAN AND DIRTY POWER PANELS, LANE CONTROLLER CABINETS AND ALL OTHER EQUIPMENT, WIRING AND COMMUNICATION ASSOCIATED WITH TOLLING IN EXISTING CASH LANES 1, 2, 3, & 4 SHALL BE REMOVED BY THE CONTRACTOR. CONTRACTOR SHALL COORDINATE WITH THE RESIDENT CONCERNING WHICH EQUIPMENT SHALL BE REMOVED AND WHEN. PAYMENT FOR THIS WORK SHALL BE INCIDENTAL TO ITEM 800.10 ELECTRICAL DEMOLITION.

Date:5/15/2015

Filename: 144_ElectricalDemo.dgn

Scale:

No.	Revision	By	Date

Designed by:

HNTB

CONSULTANT PROJECT MANAGER: R. Bruce Munger, P.E.

	By	Date		By	Date
Designed	RBM	05/15	Checked	RBM	05/15
Drawn	MPC	05/15	In Charge of	RAL	05/15

HNTB CORPORATION
340 County Road, Suite 6-C
Westbrook, ME 04092
TEL (207) 774-5155
FAX (207) 228-0909

MAINE TURNPIKE

THE GOLD STAR MEMORIAL HIGHWAY

MTA PROJECT MANAGER: William Yates

FALMOUTH SPUR TOLL PLAZA
ORT CONVERSION

ELECTRICAL AND MECHANICAL DEMOLITION

SHEET NUMBER: E-25

CONTRACT:2015.13

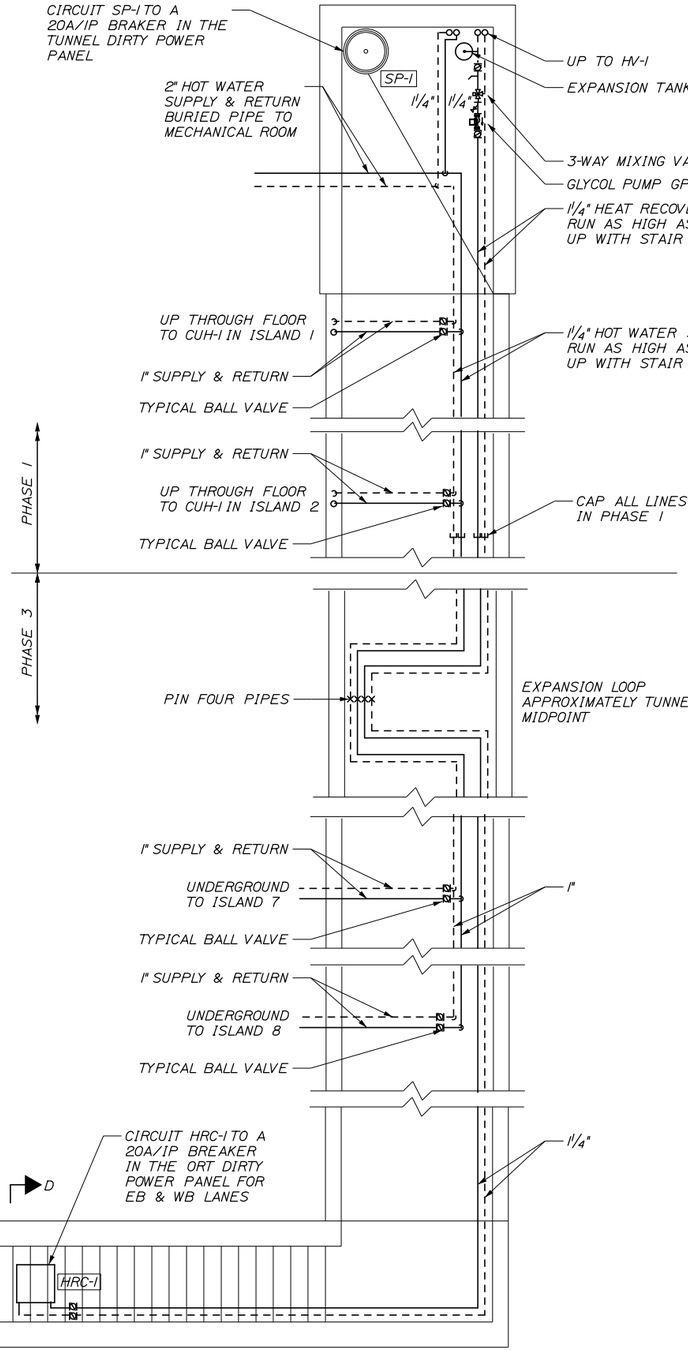

TUNNEL PLAN
1/4" = 1'-0"

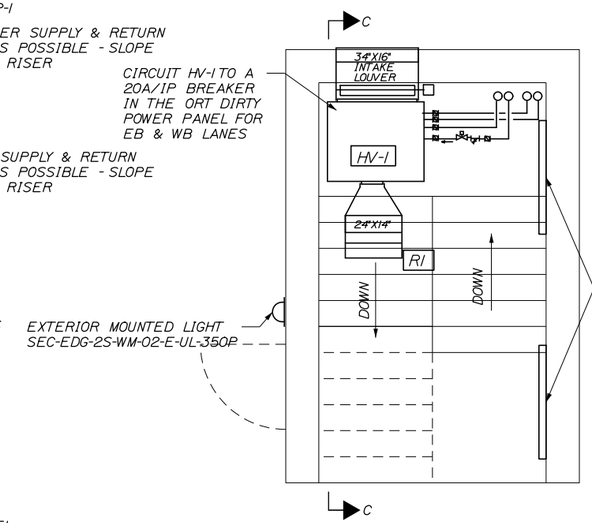

NORTHERN STAIRCASE PLAN
3/8" = 1'-0"

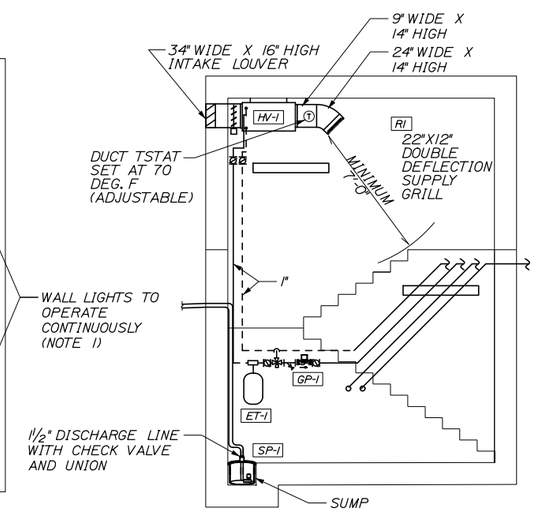

SECTION C-C
1/4" = 1'-0"

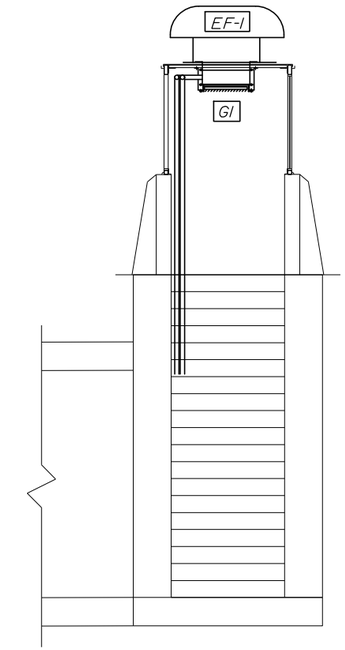

SECTION D-D
3/8" = 1'-0"

NOTES:

1. STAIR LIGHTS SHALL BE CREE #WS4-47L-35K-10V-SSL. PROVIDE 4 LIGHTS WITHIN STAIRWELL. CURCUIT TO TUNNEL LIGHTS BELOW.

2. 3#12, IN 3/4" CONDUIT RGS ALL LIGHTING.

3. SMOKE DETECTORS WITH STROBES SPACED IN TUNNEL @ 30' INTERVALS.

4. DIRTY POWER RECEPTACLES LOCATED ADJACENT TO DIRTY POWER PANELS.

5. LIGHTS LOCATED AT BOTH TUNNEL ENDS SHALL BE ON 24-7 AND LIGHTS WITHIN TUNNEL WILL BE MOTION CONTROLLED.

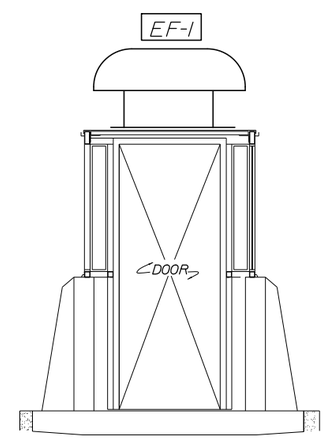

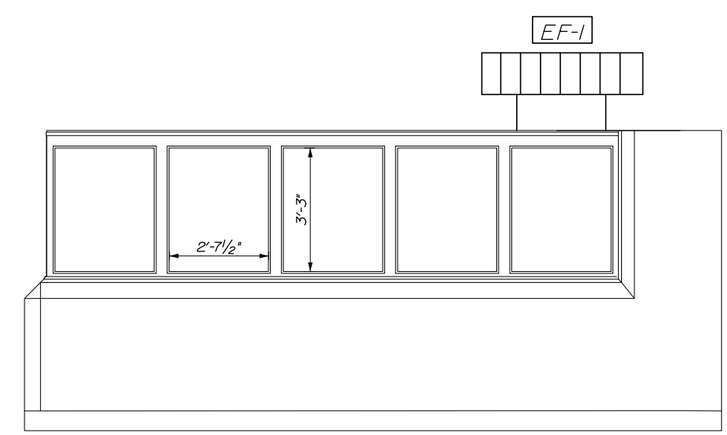

SOUTHERN STAIRCASE ENCLOSURE ELEVATION
1/2" = 1'-0"

Date:5/15/2015

Filename: 145_TunnelElectricalMechanical.dgn

Scale:

No.	Revision	By	Date

Designed by:

HNTB

CONSULTANT PROJECT MANAGER: R. Bruce Munger, P.E.

	By	Date		By	Date
Designed	KM	05/15	Checked	RBM	05/15
Drawn	MPC	05/15	In Charge of	RAL	05/15

HNTB CORPORATION
340 County Road, Suite 6-C
Westbrook, ME 04092
TEL (207) 774-5155
FAX (207) 228-0909

MAINE TURNPIKE

THE GOLD STAR MEMORIAL HIGHWAY

MTA PROJECT MANAGER: William Yates

FALMOUTH SPUR TOLL PLAZA
ORT CONVERSION

MECHANICAL & ELECTRICAL DETAIL
TUNNEL

SHEET NUMBER: E-26

CONTRACT:2015.13

AIR HANDLER SCHEDULE - HEATING ONLY

TAG	DESIGN MANUFACTURER & MODEL	AIRFLOW			ELECTRIC			FIRST STAGE HEAT RECOVERY HEATING COIL							SECOND STAGE HOT WATER HEATING COIL							WEIGHT (LBS)	REMARKS
		CFM	TSP	ECM HP	POWER	MCA	MOP	EDB	LDB	BTUH	EWT	LWT	GPM	WPD	EDB	LDB	BTUH	EWT	LWT	GPM	WPD		
HV-1	TRANE BCHD036B2 OR APPROVED EQUAL	1,400	1.35"	1.0	208/60/1	9.66	15	-10	0	28,920	51	45	10	19 Ft	-10	70	112,000	190	116	4.0	4.5 FT	173	WITH ECM FAN, MOTORIZED DAMPER AND 1" FLAT FILTER RACK

HEAT RECOVERY HEATING COIL SCHEDULE

TAG	TYPE	SIZE	CFM	APD MAX	EAT	LAT	EWT	LWT	MBH	GPM	WPD	REMARKS
HRC-1	CHILLED WATERLANGED	21"X24"	1,350	0.3" WC	60	41	34	41	28.05	10	11 FT	FLANGE MOUNTING

EXHAUST FAN SCHEDULE

TAG	DESIGN MANUFACTURER & MODEL	TYPE	CFM	ESP	ELECTRIC		REMARKS	CONTROL
					POWER	HP		
EF-1	GREENHECK RE2-20-404-A3 OR APPROVED EQUAL	HOODED DIRECT DRIVE PROP	1350	0.5" WC	115 / 60 / 1	1/3	WITH ROOF CURB AND DISCONNECT SWITCH	ON CONTINUOUSLY

EXPANSION TANK SCHEDULE

TAG	DESIGN MANUFACTURER & MODEL	TYPE	TANK VOLUME	ACCEPTANCE VOLUME	REMARKS
ET-1	WATTS ETX-60	PIPE MOUNTED - BLADDER	6 GAL	3 GAL	PRECHARGED TO 12 PSI - GLYCOL COMPATIBLE

GLYCOL PUMP SCHEDULE

TAG	DESIGN MANUFACTURER & MODEL	FUNCTION	TYPE	GPM	HEAD	RPM	ELECTRIC			REMARKS
							HP	POWER	FLA	
GP-1	WILO TOP-S 1.25X35	HEAT RECOVERY LOOP	IN-LINE	10	30	3250	0.2400	208/60/1	1.6	CONSTANT FLOW ECM MOTOR

SUMP PUMP SCHEDULE

TAG	DESIGN MANUFACTURER & MODEL	FUNCTION	TYPE	GPM	HEAD FEET	RPM	ELECTRIC		REMARKS
							HP	POWER	
SP-1	LIBERTY 237 POLY/ALUMINUM	TUNNEL SUMP DRAIN	SUBMERSIBLE VERTICAL FLOAT	14	20	2950	1/3	115/60/1	WITH CHECK VALVE AND UNION

AIR TERMINAL SCHEDULE

TAG	MANUFACTURER & MODEL	SIZE	MAX SP	REMARKS
RI	PRICE 520S OR EQUAL	22"X12"	.07"	DOUBLE DEFLECTION SUPPLY REGISTER (NO DAMPER REQUIRED)
GI	PRICE 530FF OR EQUAL	20"X20"	.15"	45 DEGREE HINGED FILTER GRILLE FOR SURFACE MOUNT

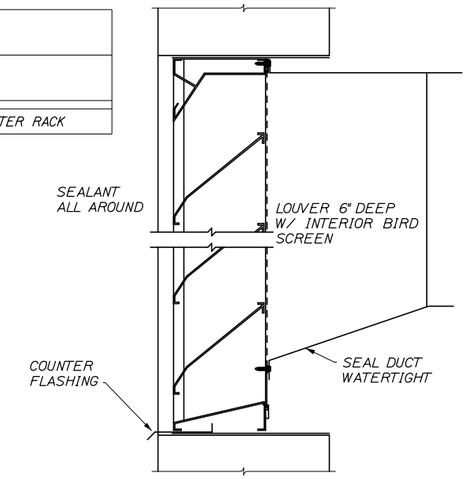

LOUVER DETAIL
NTS

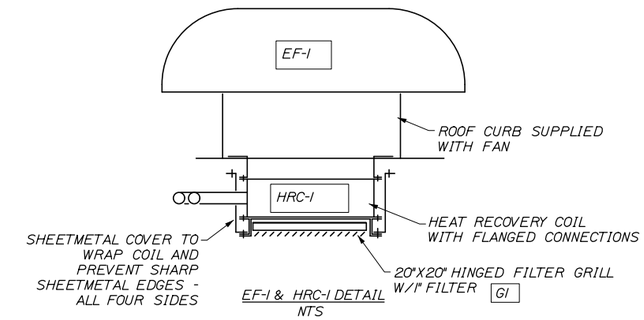

EF-1 & HRC-1 DETAIL
NTS

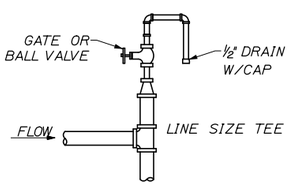

VENT DETAIL
NTS

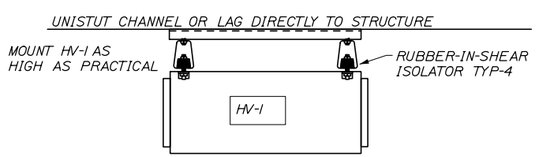

HV-1 HANGER DETAIL
NTS

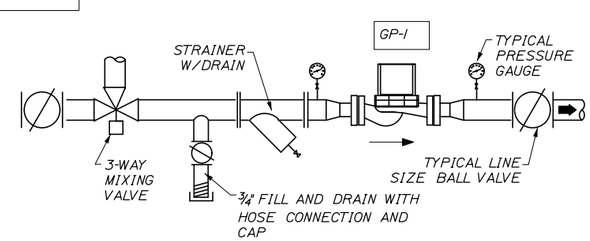

GP-1 DETAIL
NTS

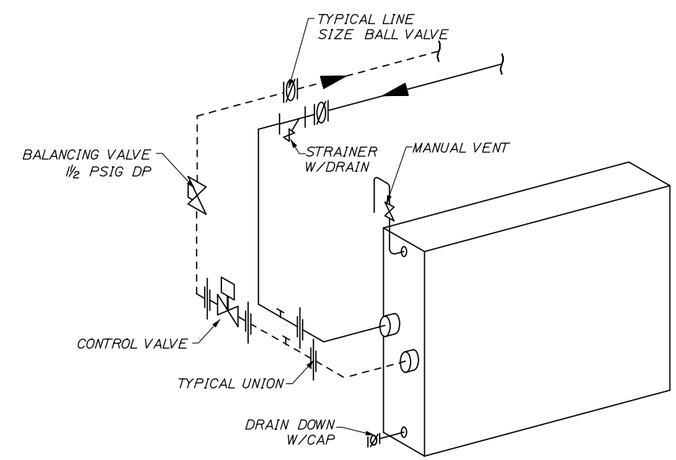

HOT WATER COIL IN HV-1 DETAIL
NTS

Date:5/15/2015

Filename: 146_Tunnel Mechanical.dgn

Scale:			
No.	Revision	By	Date

Designed by:

HNTB

CONSULTANT PROJECT MANAGER: R. Bruce Munger, P.E.

	By	Date		By	Date
Designed	KM	05/15	Checked	RBM	05/15
Drawn	MPC	05/15	In Charge of	RAL	05/15

HNTB CORPORATION
340 County Road, Suite 6-C
Westbrook, ME 04092
TEL (207) 774-5155
FAX (207) 228-0909

MAINE TURNPIKE

THE GOLD STAR MEMORIAL HIGHWAY

MTA PROJECT MANAGER: William Yates

FALMOUTH SPUR TOLL PLAZA
ORT CONVERSION

MECHANICAL DETAIL
TUNNEL

SHEET NUMBER: E-27

CONTRACT:2015.13

CABINET UNIT HEATER SCHEDULE

TAG	DESIGN MANUFACTURER & MODEL	SUPPLY FAN			ELECTRIC			HOT WATER HEATING COIL								WEIGHT (LBS)	REMARKS	CONTROLS AND ACCESSORIES BY MANUFACTURER OF UNIT
		CFM	RPM	HP	POWER	MCA	MOP	EDB	LDB	BTUH	EWT	LWT	GPM	WPD	ROWS			
CUH-1	TRANE FFMB06 OR APPROVED EQUAL	541	727	0.22	115/60/1	3.88	15	60	138	46,000	190	135	2.00	1.11 Ft	3	146	SURFACE, FLOOR MOUNT - INVERTED FLOW, FRONT INTAKE, FRONT DISCHARGE (MAX. 29" HIGH, 50" WIDE CABINET)	3-WAY DIVERTING ELECTRIC CONTROL VALVE, CIRCUIT SETTER, REMOTE THERMOSTAT, SHUTOFF VALVES AND POWER DISCONNECT

ROOF-MOUNTED HEAT PUMP SCHEDULE

TAG	DESIGN MANUFACTURER AND MODEL	COOLING NOMINAL SIZE	ELECTRIC				WEIGHT	REMARKS
			POWER	COMPRESSOR	FAN	HEATER		
RHUP-1	DOMETIC B5951G OR APPROVED EQUAL	15,000	115/60/1	13.2 FLA	2.7 FLA	13.7 FLA	74 LBS	WITH AIR DISTRIBUTION BOX AND THERMOSTAT SUPPLIED BY MANUFACTURER

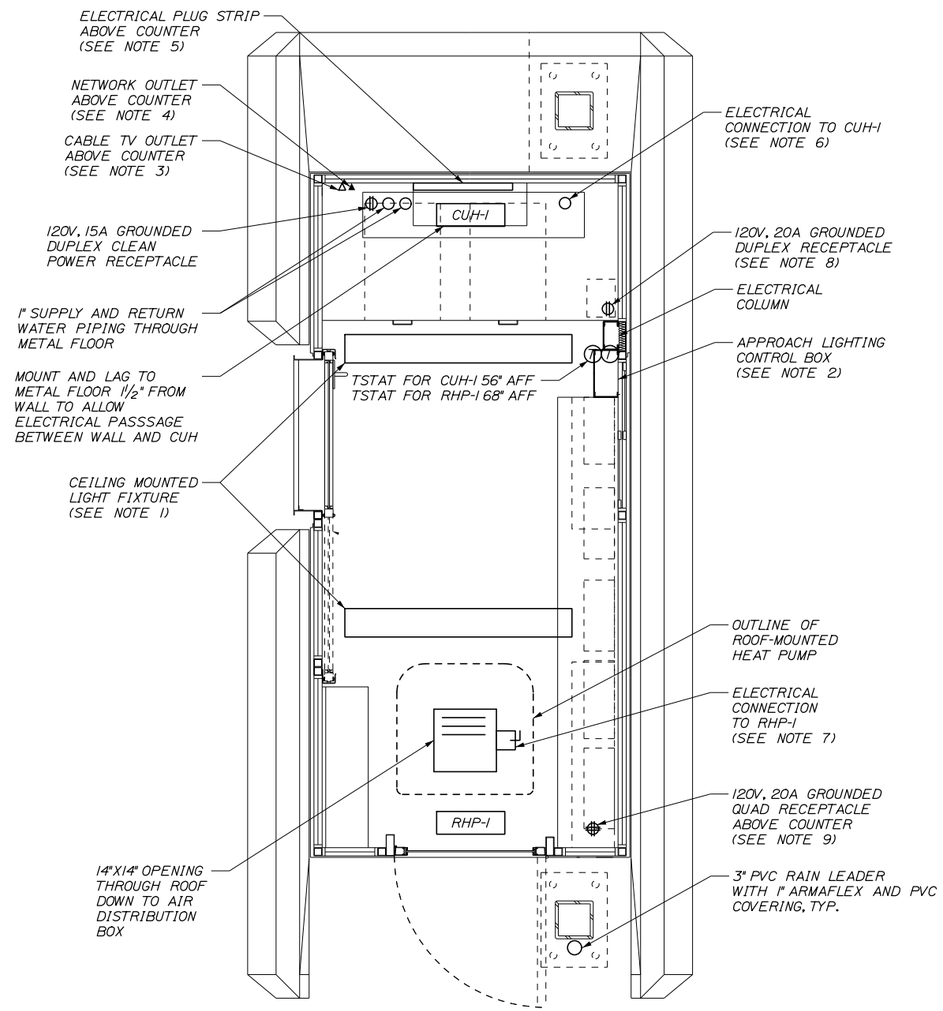

PROPOSED TOLL BOOTH
3/4" = 1'-0"

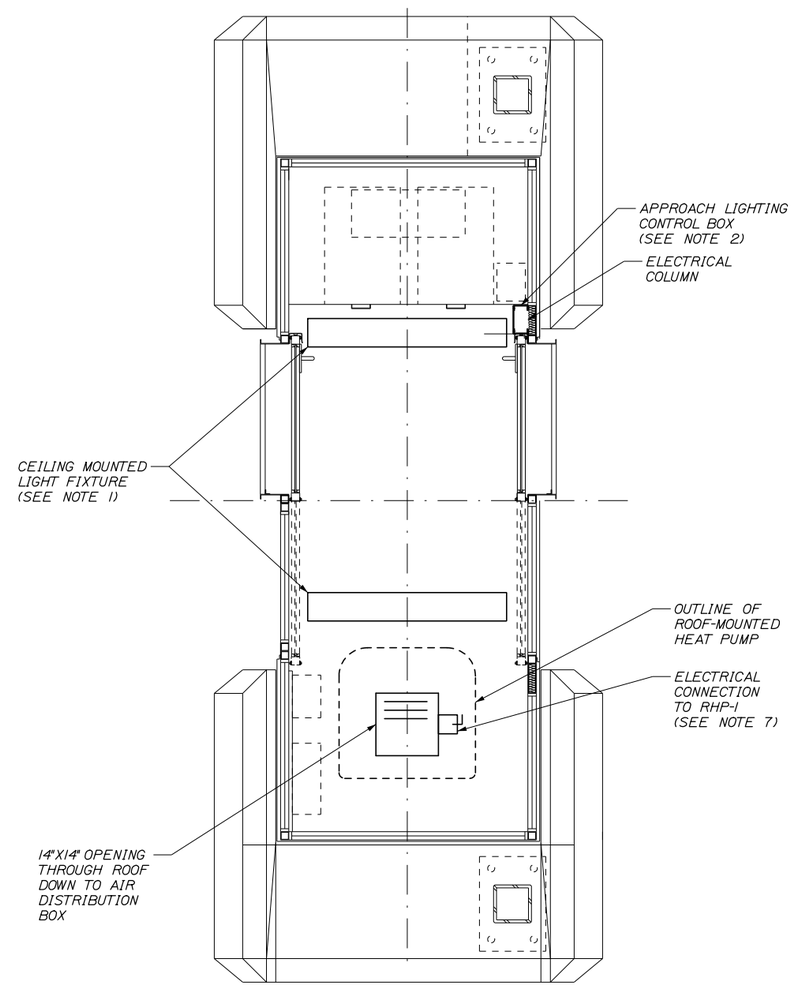

EXISTING TOLL BOOTH
3/4" = 1'-0"

NOTES:

1. PROVIDE NEW CEILING MOUNTED LIGHT FIXTURES IN BOTH PROPOSED AND EXISTING BOOTHS THAT REMAIN. LIGHTS SHALL BE CREE #SMK-LE-S/SMK-LE-EC/CR-LE-32L-35K-10V, OR APPROVED EQUAL.

2. AT THE PROPOSED BOOTHS, PROVIDE APPROACH LIGHTING CONTROL SWITCHES TO BE INSTALLED ADJACENT TO THE ELECTRICAL COLUMN. IN BOTH THE PROPOSED BOOTHS AND THE EXISTING BOOTHS THAT ARE TO REMAIN, PROVIDE A 0-10 VOLT DIMMER WIRED TO THE CEILING LIGHTS. WIRE THE BOOTH LIGHTS TO A 20A/1P BREAKER IN THE RESPECTIVE CLEAN POWER PANEL.

3. PROVIDE A COAX OUTLET WITH RG6 CABLE EXTENDED THROUGH THE TUNNEL TO THE TELEPHONE BOARD IN THE PLAZA BUILDING.

4. PROVIDE A CAT5e NETWORK OUTLET WITH CAT5e CABLE EXTENDED THROUGH THE TUNNEL TO THE TELEPHONE BOARD IN THE PLAZA BUILDING.

5. PROVIDE PLUG-STRIP ABOVE THE BOOTH COUNTER. PLUG STRIP SHALL BE LEGRAND #2000 USB SERIES. PLUG STRIP SHALL HAVE A DUPLEX USB JACK AT ONE END AND FOUR 15A, GROUNDED ELECTRICAL OUTLETS SPACED ALONG THE REMAINING LENGTH. WIRE THE PLUG STRIP TO A 20A/1P BREAKER IN THE RESPECTIVE DIRTY POWER PANEL.

6. VERIFY EXACT LOCATION OF ELECTRICAL CONNECTION POINT FOR CVH-1. WIRE CVH-1 TO A 15A/1P BREAKER IN THE RESPECTIVE CLEAN POWER PANEL.

7. PROVIDE A 30A/1P WEATHERPROOF DISCONNECT SWITCH AT THE ROOF-TOP RHP-1. WIRE RHP-1 TO A 20A/1P BREAKER IN THE RESPECTIVE CLEAN POWER PANEL.

8. PROVIDE A 120V, 20A DUPLEX RECEPTACLE TO BE INSTALLED IN THE ELECTRICAL COLUMN 18" ABOVE THE FLOOR. CONNECT THE RECEPTACLE TO A 20A/1P BREAKER IN THE RESPECTIVE DIRTY POWER PANEL.

9. PROVIDE A 120V, 20A QUAD RECEPTACLE INSTALLED ABOVE THE COUNTER. CONNECT THE RECEPTACLE TO THE PLUG STRIP CIRCUIT (SEE NOTE 5).

Scale:

No.	Revision	By	Date

Designed by: HNTB

CONSULTANT PROJECT MANAGER: R. Bruce Munger, P.E.

	By	Date		By	Date
Designed	KM	05/15	Checked	RBM	05/15
Drawn	MPC	05/15	In Charge of	RAL	05/15

HNTB CORPORATION
340 County Road, Suite 6-C
Westbrook, ME 04092
TEL (207) 774-5155
FAX (207) 228-0909

MAINE TURNPIKE

THE GOLD STAR MEMORIAL HIGHWAY

MTA PROJECT MANAGER: William Yates

FALMOUTH SPUR TOLL PLAZA
ORT CONVERSION

ELECTRICAL AND MECHANICAL
BOOTH DETAILS

SHEET NUMBER: E-28

CONTRACT:2015.13

Date:5/15/2015

Filename: 147_Booth Lighting.dgn

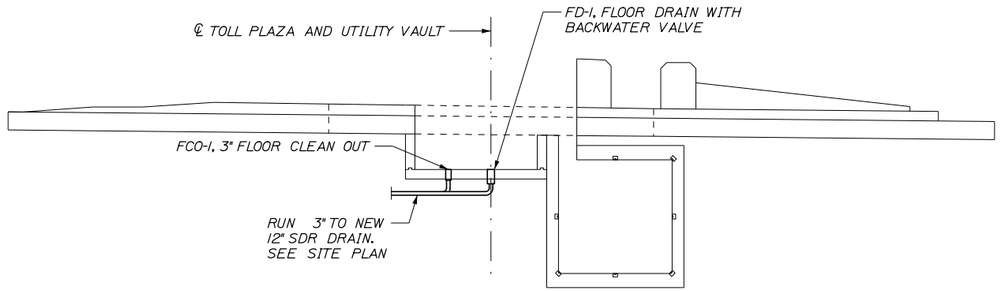

ISLAND ELEVATION
3/16" = 1'-0"

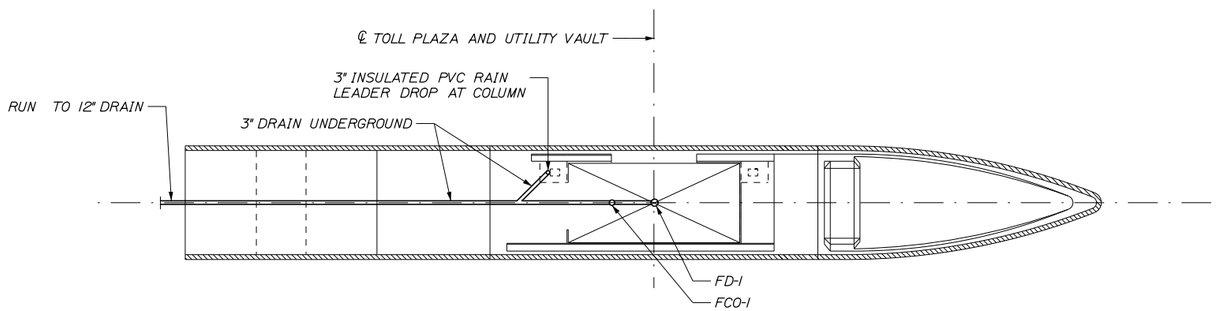

ISLAND PLAN
3/16" = 1'-0"

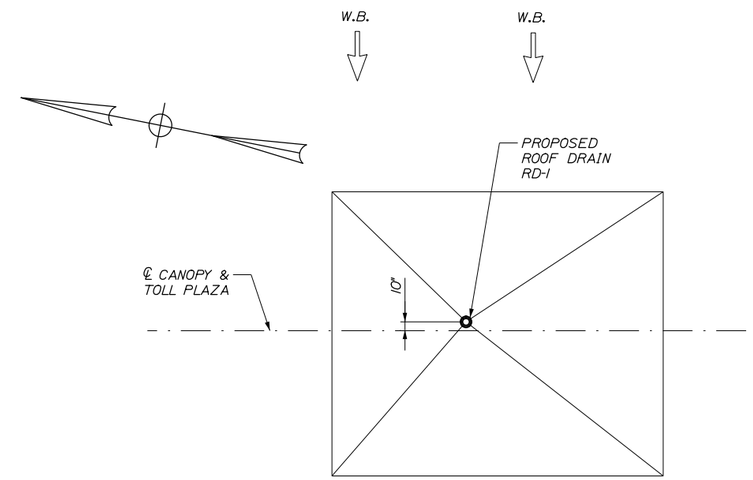

CANOPY ROOF PLAN
1/8" = 1'-0"

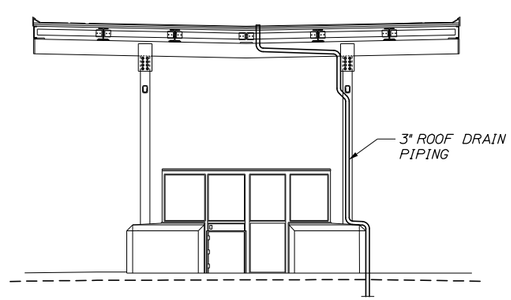

BOOTH AND CANOPY ELEVATION
3/16" = 1'-0"

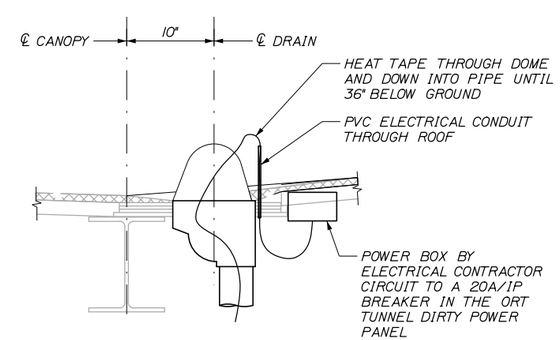

SECTION A - A
NTS

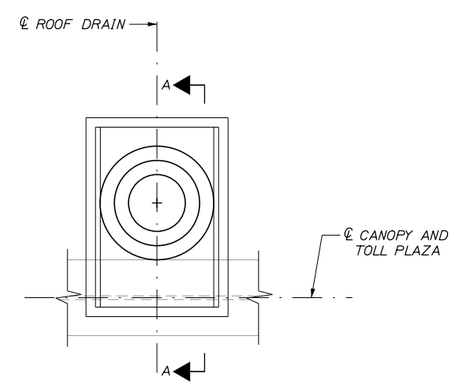

ROOF DRAIN PLAN
NTS

Date:5/15/2015

Filename: 148_CanopyBooth-ElecMech.dgn

Scale:			
No.	Revision	By	Date

Designed by:

HNTB

CONSULTANT PROJECT MANAGER: R. Bruce Munger, P.E.

	By	Date		By	Date
Designed	KM	05/15	Checked	RBM	05/15
Drawn	MPC	05/15	In Charge of	RAL	05/15

HNTB CORPORATION
340 County Road, Suite 6-C
Westbrook, ME 04092
TEL (207) 774-5155
FAX (207) 228-0909

MAINE TURNPIKE

THE GOLD STAR MEMORIAL HIGHWAY

MTA PROJECT MANAGER: William Yates

FALMOUTH SPUR TOLL PLAZA
ORT CONVERSION

MECHANICAL & ELECTRICAL DETAIL
BOOTH AND CANOPY

SHEET NUMBER: E-29

CONTRACT:2015.13

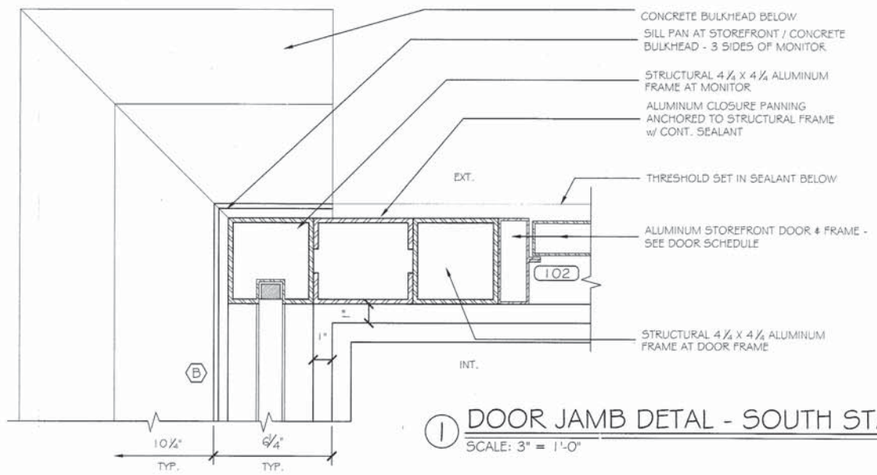

1 DOOR JAMB DETAL - SOUTH STAIR
SCALE: 3" = 1'-0"

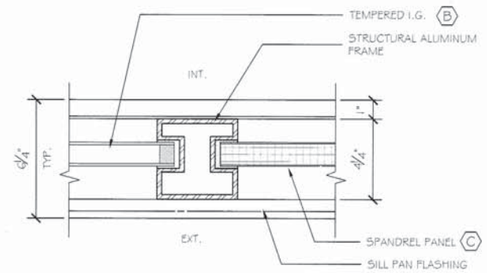

2 MONITOR MULLION
SCALE: 3" = 1'-0"

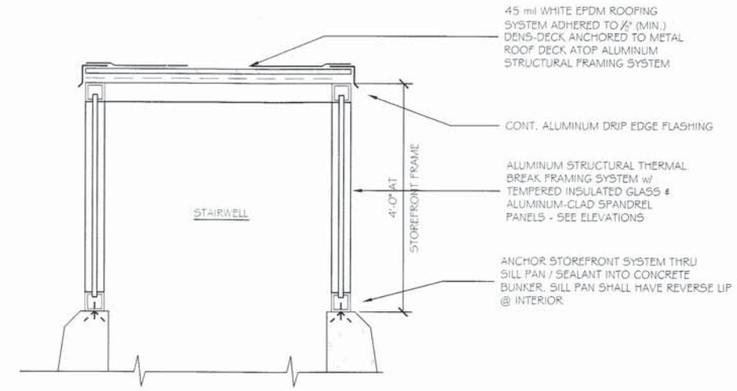

A SOUTH STAIR SECTION @ MONITOR
SCALE: 3/4" = 1'-0"

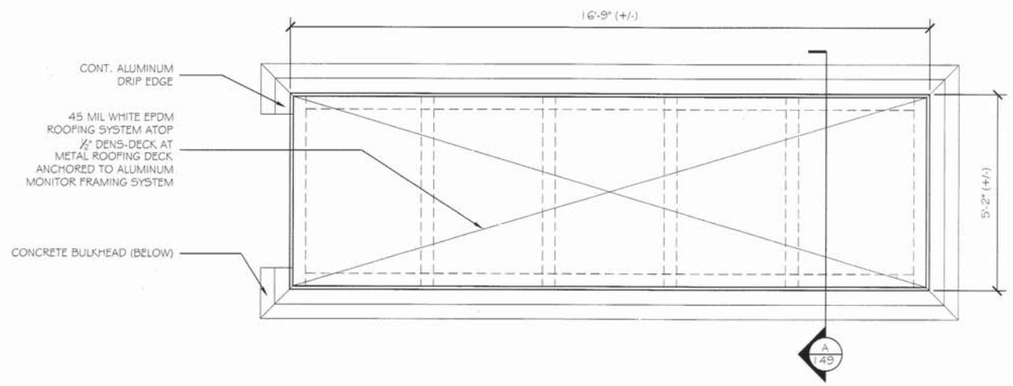

SOUTH STAIRCASE ROOF PLAN
SCALE: 1/2" = 1'-0"

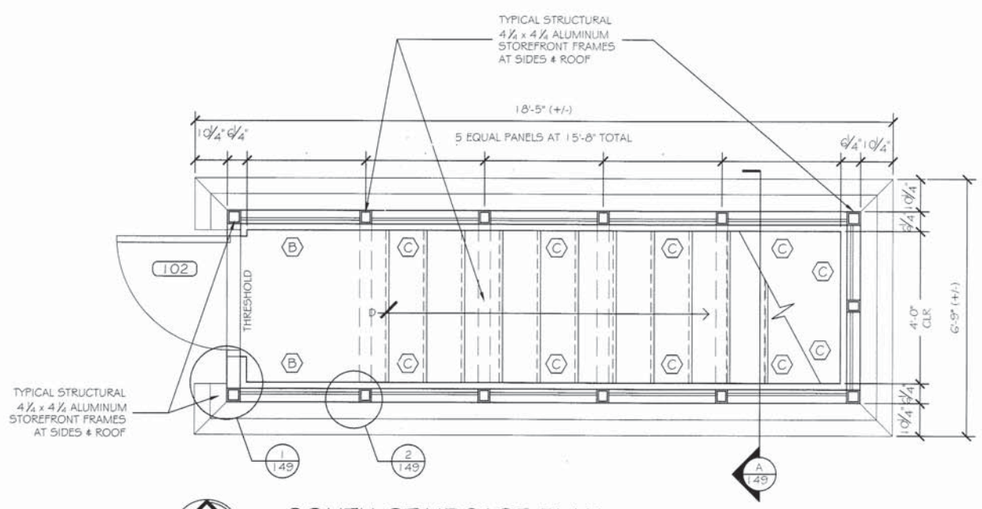

SOUTH STAIRCASE PLAN
SCALE: 1/2" = 1'-0"

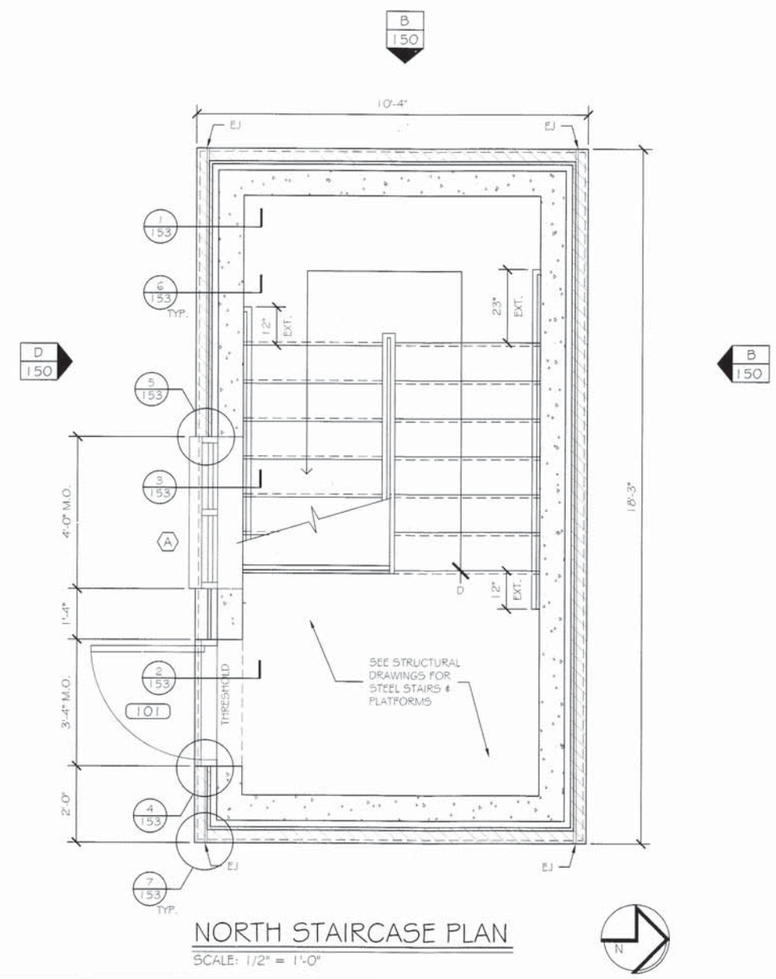

NORTH STAIRCASE PLAN
SCALE: 1/2" = 1'-0"

GRANT HAYS ASSOCIATES
ARCHITECTURE & INTERIOR DESIGN
P.O. BOX 0179 FALMOUTH MAINE 04105
207.871.5900 www.granthays.com

SEAL

LICENSED ARCHITECT
MICHAEL F. HAYS
No. 1724
STATE OF MAINE

REVISIONS

DRAWING NAME

FALMOUTH SPUR TOLL PLAZA
ORT CONVERSION

MAINE TURNPIKE AUTHORITY / MTB CORP.

SHEET

NORTH & SOUTH STAIRCASE PLANS, SOUTH STAIRCASE MONITOR ROOF PLAN & DETAILS

DATE 13 MAY '15

SCALE AS NOTED

DRAWN MFH/mgk

JOB NO. 150409

SHEET 149

COPYRIGHT
REPRODUCTION OR REUSE OF THIS DOCUMENT WITHOUT WRITTEN PERMISSION FROM GRANT HAYS ASSOCIATES IS PROHIBITED.

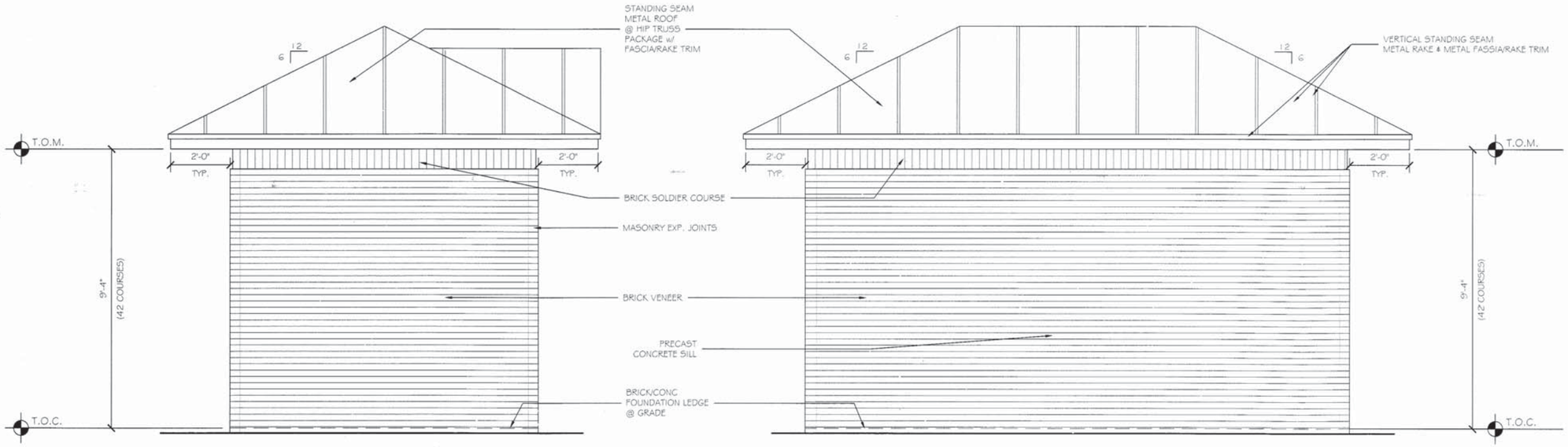

(A) NORTH ELEVATION
SCALE: 1/2" = 1'-0"

(B) EAST ELEVATION
SCALE: 1/2" = 1'-0"

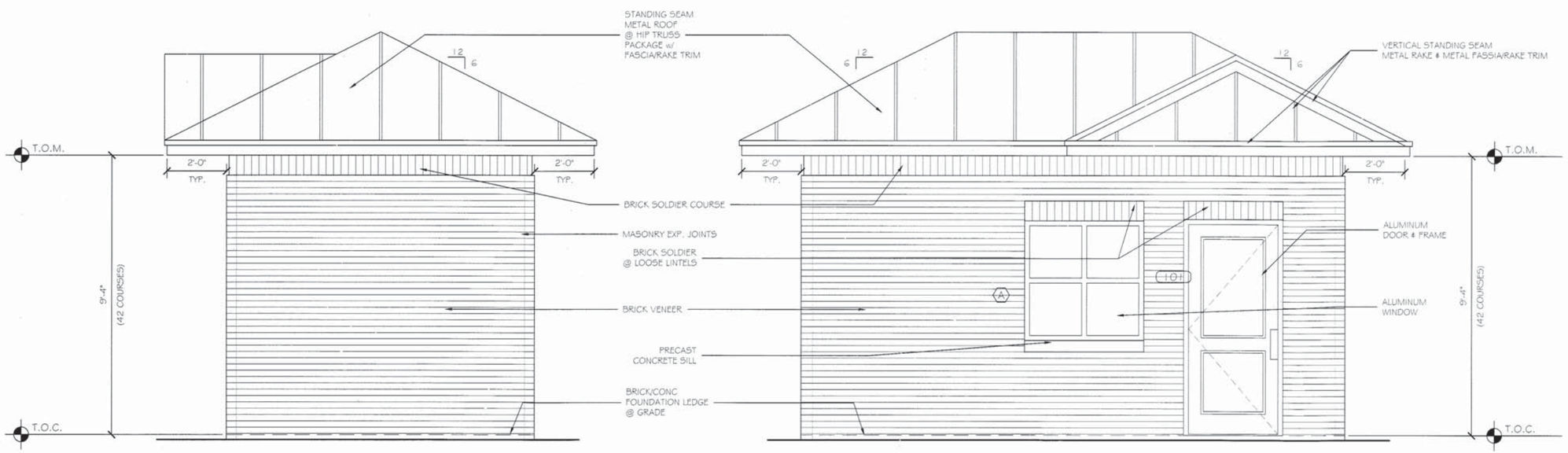

(C) SOUTH ELEVATION
SCALE: 1/2" = 1'-0"

(D) WEST ELEVATION
SCALE: 1/2" = 1'-0"

GRANT HAYS
ASSOCIATES
ARCHITECTURE & INTERIOR DESIGN
P.O. BOX 6179 FALMOUTH MAINE 04105
207.871.5900 www.granthays.com

SEAL

LICENSED ARCHITECT
MICHAEL F. HAYS
No. 1724
STATE OF MAINE

REVISIONS

DRAWING NAME

FALMOUTH/PUR
TOLL PLAZA
ORT CONVERSION

MAINE TURNPIKE AUTHORITY / HATB CORP.

SHEET

TUNNEL/STAIR
ENCLOSURE
ELEVATIONS
(NORTH/STAIRCASE)

DATE
13 MAY '15

SCALE
1/2"=1'-0"

DRAWN
MFH/mgk

JOB NO.
150409

SHEET
150

COPYRIGHT
REPRODUCTION OR REUSE OF THIS DOCUMENT WITHOUT WRITTEN PERMISSION FROM GRANT HAYS ASSOCIATES IS PROHIBITED.

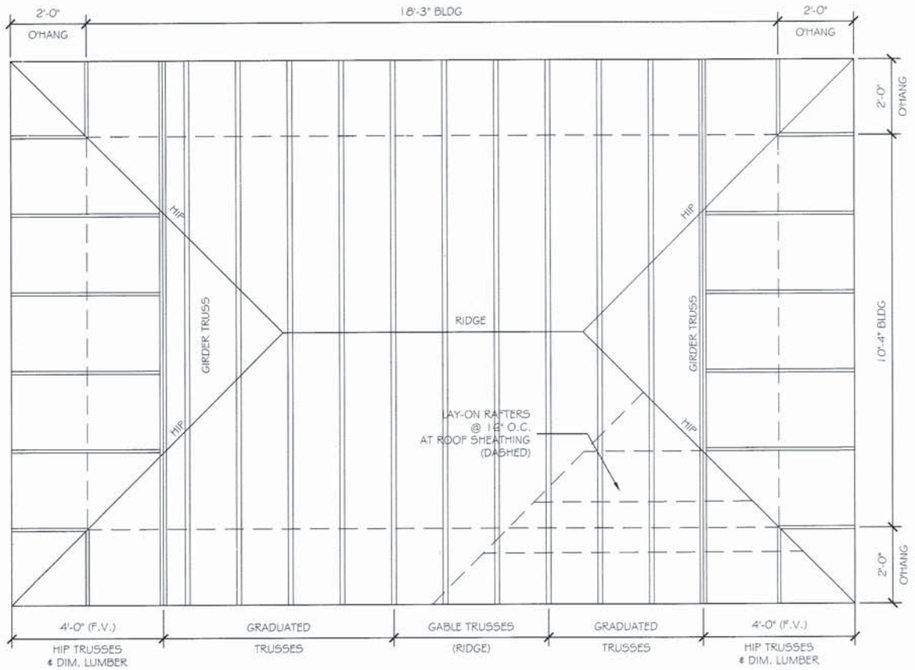

SCHEMATIC ROOF FRAMING PLAN - NORTH STAIRCASE

SCALE: 1/2" = 1'-0"

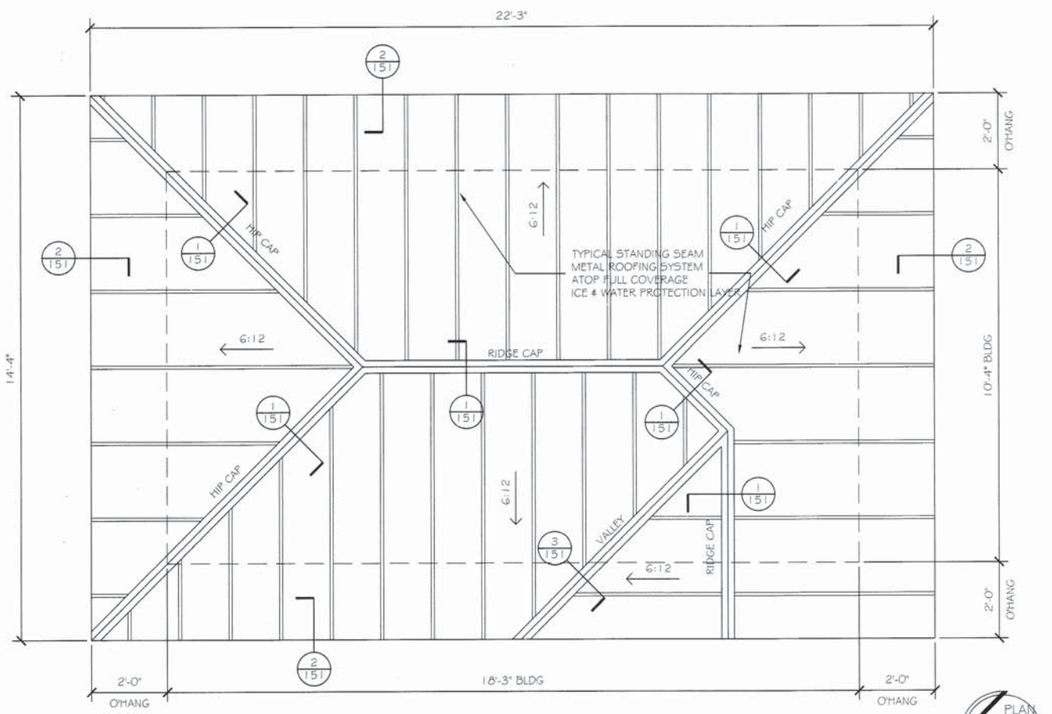

ROOF PLAN - NORTH STAIRCASE

SCALE: 1/2" = 1'-0"

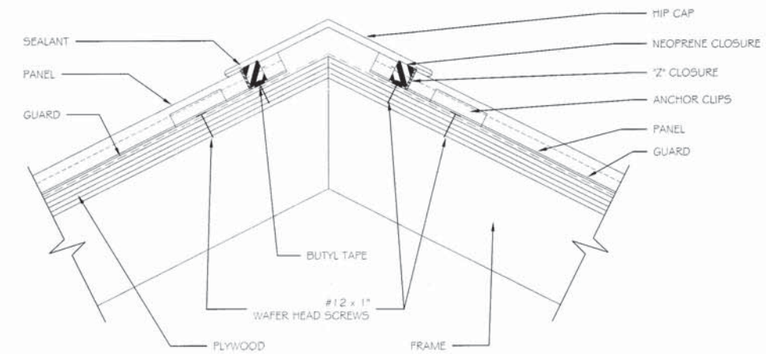

① ROOF HIP/RIDGE DETAIL 3"= 1'-0"

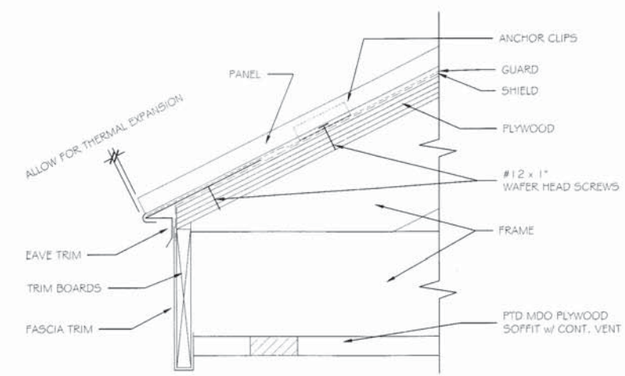

⑥ ROOF EAVE DETAIL 3"= 1'-0"

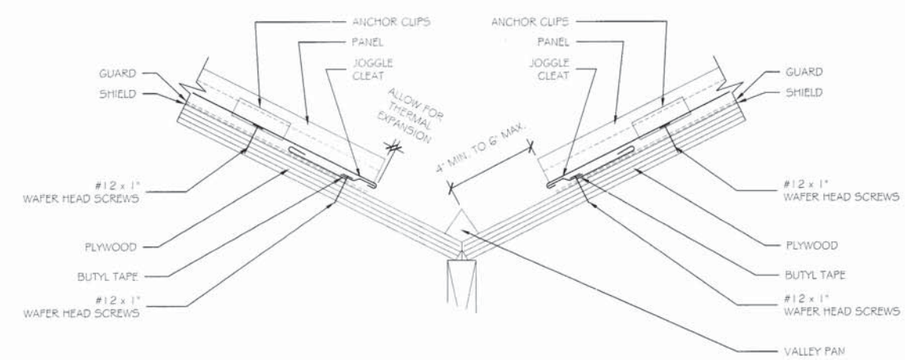

⑦ ROOF VALLEY DETAIL 3"= 1'-0"

GRANT HAYS
ASSOCIATES
ARCHITECTURE & INTERIOR DESIGN
P.O. BOX 6179 FALMOUTH MAINE 04105
207.871.5900 www.granthays.com

SEAL

LICENSED ARCHITECT
MICHAEL F. HAYS
No. 1724
STATE OF MAINE

REVISIONS

DRAWING NAME

FALMOUTH SPUR
TOLL PLAZA
ORT CONVERSION

MAINE TURNPIKE AUTHORITY / HNTB CORP.

SHEET

ROOF PLANS
& DETAILS
(NORTH STAIRCASE)

DATE
13 MAY '15

SCALE
1/2"=1'-0"

DRAWN
MFH/mgk

JOB NO.
150409

SHEET
151

COPYRIGHT
REPRODUCTION OR REUSE OF THIS DOCUMENT WITHOUT WRITTEN PERMISSION FROM GRANT HAYS ASSOCIATES IS PROHIBITED.

SYMBOLS

- 101 ROOM NUMBER
- 102 DOOR NUMBER
- A WINDOW NUMBER
- A/A7 BUILDING SECTION
- 1/A2 WALL SECTION
- B/A10 DETAIL SECTION
- 6-A9 CASEWORK ELEVATION
- INTERIOR ELEVATION
- VERTICAL ELEVATION
- PARTITION TYPE
- STRUCTURAL CENTERLINE

MATERIALS

- CONCRETE
- CONCRETE MASONRY UNIT
- BRICK
- GRAVEL
- SOIL
- STUD PARTITION (EXISTING)
- STEEL
- WOOD FRAMING
- WOOD BLOCKING
- PLYWOOD
- GYPSUM BOARD
- SUSPENDED ACOUSTICAL TILE
- BATT INSULATION
- RIGID INSULATION
- FINISH WOOD
- ONE HOUR RATED PARTITION
- TWO HOUR RATED PARTITION
- EXISTING PARTITION (SCREENED)
- NEW PARTITION

FINISH SCHEDULE

ABBREVIATIONS

SF-1 S-FORM PANEL, TYPE 1; CAP CORRUGATED ACRYLIC PANEL; CH CONCRETE w/ HARDENER; CMP CORRUGATED METAL PANEL; CT CERAMIC TILE; E EXISTING; FRP FIBERGLASS REINFORCED PANELS; FV FIELD VERIFY; GL GLASS; GWB GYPSUM WALL BOARD; MP METAL PANEL; P PAINT; RF RESINOUS FLOORING; SAT SUSPENDED ACOUSTICAL TILE; SOC SHAKE-ON COLOR; SS STAINLESS STEEL; SV SHEET VINYL; VB VINYL BASE; VP VINYL PLANK; WD WOOD

RM NO.	NAME	WALLS N	WALLS E	WALLS S	WALLS W	FLOORS MAT'L	FLOORS BASE	FLOORS MAT'L	FLOORS BASE	CEILING A TYPE	CEILING A HT.	CEILING B TYPE	CEILING B HT.	REMARKS
101	NORTH STAIRCASE	CONC	CONC	CONC	CONC	CH	—	—	—	CONC	8'-0"	—	—	
102	TUNNEL	CONC	CONC	CONC	CONC	CH	—	—	—	CONC	9'-0"	—	—	
103	SOUTH STAIRCASE	CONC	CONC	CONC	CONC	CH	—	—	—	CONC	VARIES	—	—	

DOOR SCHEDULE

ABBREVIATIONS

AL ALUMINUM; DW DRYWALL; (E) EXISTING; ES EDGE STRIP; EMHO ELECTRO MAGNETIC HOLD OPENER; GL GLASS; HM HOLLOW METAL; INSUL INSULATED; SS STAINLESS STEEL; T TEMPERED; TB THERMAL BREAK; TH THERMAL INSULATED; TS TRANSITION STRIP; V VINYL; W WIRE; WD WOOD; W/ WITH

NO.	TYPE	SIZE (w x h)	THK	INSUL	HDWE	FR	GLASS TYPE	GLASS SIZE	REMARKS	FRAMES TYPE	FRAMES FR	FRAMES PROFILE	FRAMES DETAILS HEAD	FRAMES DETAILS JAMB	THRESHOLDS MATERIAL	THRESHOLDS DETAILS SILL	THRESHOLDS DETAILS FIN
101	A	3'x7' *	1 3/4"	YES	HW-1	NO	T/TH	24x36	*MODIFY FOR M.O. HT.	A	NO	ALUM	2-153	4-153	ALUM	2-153	—
102	A	3'x7'	1 3/4"	YES	HW-1	NO	T/TH	24x36		A	NO	ALUM			ALUM		—

WINDOW SCHEDULE

ABBREVIATIONS

AL ALUMINUM; CMT CASEMENT; DH DOUBLE HUNG; (E) EXISTING; FIX FIXED SASH; INSUL INSULATED; MTL METAL; TEMP TEMPERED; V VINYL; WG WIRE GLASS; WD WOOD; W/ WITH

NO.	TYPE	MANUFACTURER MFGR	MANUFACTURER MODEL	NOMINAL SIZE WIDTH	NOMINAL SIZE HEIGHT	DETAILS HEAD	DETAILS JAMB	DETAILS SILL	DETAILS MUNT	DETAILS MULL	REMARKS
A	FIXED	ALUMINUM	THERMAL BREAK	4'-0"	4'-0"	3-153	5-153	3-153			* 5 EQUAL PANELS - F.V. SIZE
B/C	FIXED	ALUMINUM	THERMAL BREAK	3'-4 1/8" *	4'-0"	A-149	B-149	A-149			
C	FIXED	ALUMINUM	THERMAL BREAK	2'-6 1/4" *	4'-0"	A-149	B-149	A-149			* 2 EQUAL PANELS - F.V. SIZE

ABBREVIATIONS

AFF ABOVE FINISH FLOOR
ALUM or AL ALUMINUM
AWP ACOUSTICAL WALL PANEL

BIT BITUMINOUS
BM BENCH MARK
BOT BOTTOM
BRG BEARING
BRK BRICK

C CARPET
CAB CABINET
CB CHALK BOARD
CC CENTER TO CENTER
CH CONCRETE FLOOR WITH HARDENER
CJ CONTROL JOINT
CL CENTER LINE
CLG CEILING
CMU CONCRETE MASONRY UNIT
CONC CONCRETE
CONT CONTINUOUS
CONST CONSTRUCTION
CONTR CONTRACTOR
CT CERAMIC TILE

DBL DOUBLE
DC DOOR CLOSER
DIA DIAMETER
DIM DIMENSION
DNA DOES NOT APPLY
DR DOOR
DTL DETAIL
DWG DRAWING

E EAST
EA EACH
EF EACH FACE
EJ EXPANSION JOINT
EL ELEVATION
ELEC ELECTRICAL
ELEV ELEVATOR
EMHO ELECTROMAGNETIC HOLD OPEN
EQ EQUAL
EW EACH WAY
EWC ELECTRIC WATER COOLER
EXIST OF (E) EXISTING
EXP EXPANSION
EXT EXTERIOR

FCS FLOOR COATING SYSTEM
FD FLOOR DRAIN
FDN FOUNDATION
FE FIRE EXTINGUISHER
FFE FINISH FLOOR ELEVATION
FIN FINISH
FIN FL or FF FINISH FLOOR
FIN GR FINISH GRADE
FL FLOOR
FR FIRE RATING
FRMG FRAMING
FT FEET (FOOT)
FV FIELD VERIFY
FWC FABRIC WALL COVERING

G GRANITE
GA GAUGE
GALV GALVANIZED
GB GRAB BARS
GC GENERAL CONTRACTOR
GWB GYPSUM WALL BOARD

HC HANDICAP
HD WD HARDWOOD
HDR HEADER
HDWE HARDWARE
HM HOLLOW METAL
HORIZ HORIZONTAL
HT HEIGHT

ID INSIDE DIAMETER
IF INSIDE FACE
IN INCHES
INSUL INSULATION
INT INTERIOR

JNT or JT JOINT

KEC KITCHEN EQUIPMENT CONSULTANT
KP KICK PLATE

L LAVATORY
LAB LABEL (FIRE)
LNTL LINTEL
LOC LOCATION
LS LOCKSET

M MARBLE
MAS MASONRY
MAX MAXIMUM
MB MARKER BOARD
MECH MECHANICAL
MFCR MANUFACTURER
MIN MINIMUM
MISC MISCELLANEOUS
MO MASONRY OPENING
MR MOP OPENING
MRGB MOISTURE RESISTANT GYPSUM BOARD
MTL METAL

N NORTH
NA NOT APPLICABLE
NIC NOT IN CONTRACT
NO NUMBER
NOM NOMINAL
NTS NOT TO SCALE

OA OVERALL
OC ON CENTER
OD OUTSIDE DIAMETER
OF OUTSIDE FACE
OPNG OPENING
OPP OPPOSITE

P PAINT
PTD PAINTED
PB PANIC BAR
PL PLATE
PLY WD PLYWOOD
PNL PANEL
PS PASSAGE LATCH SET
P.T. PRESSURE TREATED
PT & D PAPER TOWEL & WASTE DISPENSER
PTN PARTITION

RD ROOF DRAIN
RE REFER
REF REFRIGERATOR
REINF REINFORCED
REQ'D REQUIRED
RM ROOM
RO ROUGH OPENING

S SOUTH
SAT SUSPENDED ACOUSTICAL TILE CEILING
SC SHOWER CURTAIN
SD SOAP DISPENSER
SCHED SCHEDULE
SECT SECTION
SGB SUSPENDED GYPSUM BOARD CEILING
SHT SHEET
SIM SIMILAR
SND SANITARY NAPKIN DISPOSAL
SPEC SPECIFICATIONS
SQ SQUARE
SSS SYNTHETIC SPORTS SURFACE
STD STANDARD
STL STEEL
STRUCT STRUCTURAL
STV STRAIGHT VINYL BASE
SV SHEET VINYL

T TEMPERED (GLASS)
TB TACK BOARD
TH THERMAL (INSULATED)
THK THICKNESS
TO TOP OF
TOB TOP OF BEAM
TOM TOP OF MASONRY
TOW TOP OF WALL
TP TOILET PAPER DISPENSER
TYP TYPICAL

VB VAPOR BARRIER
VCT VINYL COMPOSITION TILE
VERT VERTICAL
VWC VINYL WALL COVERING

W WEST
w/ WITH
WC WATER CLOSET
WD WOOD
WF WATER FOUNTAIN
WG WIRE GLASS
WP WOOD PANELING

GENERAL NOTES

1. ALL WORK SHALL CONFORM TO LOCAL AND STATE LAWS, ORDINANCES AND PREVAILING EDITIONS OF ADOPTED BUILDING CODES. IT IS THE CONTRACTOR'S RESPONSIBILITY TO SECURE ALL PERMITS FOR WORK.
2. THE CONTRACTOR SHALL VERIFY ALL CONDITIONS AND DIMENSIONS PRIOR TO COMMENCING THE WORK AND REPORT ANY DISCREPANCIES TO THE ARCHITECT. CONTRACTOR SHALL PROCEED WITH THE WORK ONLY AFTER SUCH DISCREPANCIES HAVE BEEN RESOLVED BY THE ARCHITECT. CONTRACTOR SHALL ALLOW A 48 HOUR TIME FRAME FOR RESOLVING DISCREPANCIES ONCE THE ARCHITECT HAS ACKNOWLEDGED THE CONDITION.
3. THE CONTRACTOR SHALL REVIEW AND VERIFY ALL EXISTING CONDITIONS PRIOR TO STARTING THE WORK IN ANY GIVEN AREA.
4. WORK WITH GIVEN DIMENSIONS AND LARGE SCALE DETAILS. DO NOT SCALE THE DRAWINGS AS THE REPRODUCTIVE PROCESS TENDS TO DISTORT THE ACCURACY OF THE GRAPHIC SCALE INDICATED.
5. ALL CONSTRUCTION ACTIVITIES SHALL BE PERFORMED IN A NEAT, SAFE, AND CLEAN MANNER. ALL CONSTRUCTION WASTE SHALL BE REMOVED FROM THE BUILDING. SITE BURNING IS NOT ALLOWED. LEAVE WORK AREA IN A CLEAN, SAFE CONDITION AT THE END OF EACH WORK DAY.
6. ALL CONSTRUCTION DEBRIS SHALL BE DISPOSED OF AT AN APPROVED OFF-SITE FACILITY IN COMPLIANCE WITH ALL REGULATIONS.
7. ALL WOOD IN CONTACT WITH MASONRY OR CONCRETE SHALL BE PRESSURE TREATED.

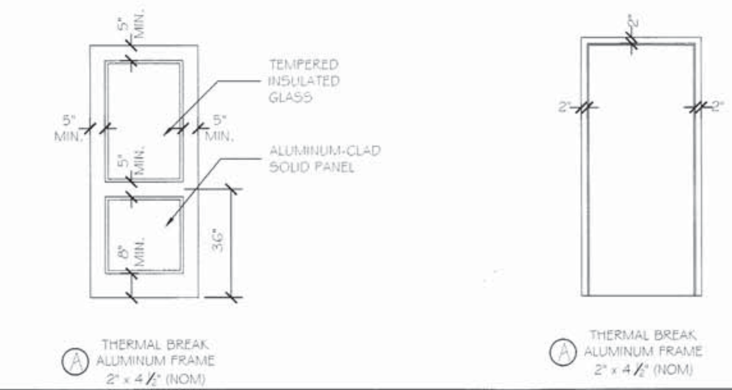

DOOR & FRAME TYPES — NO SCALE

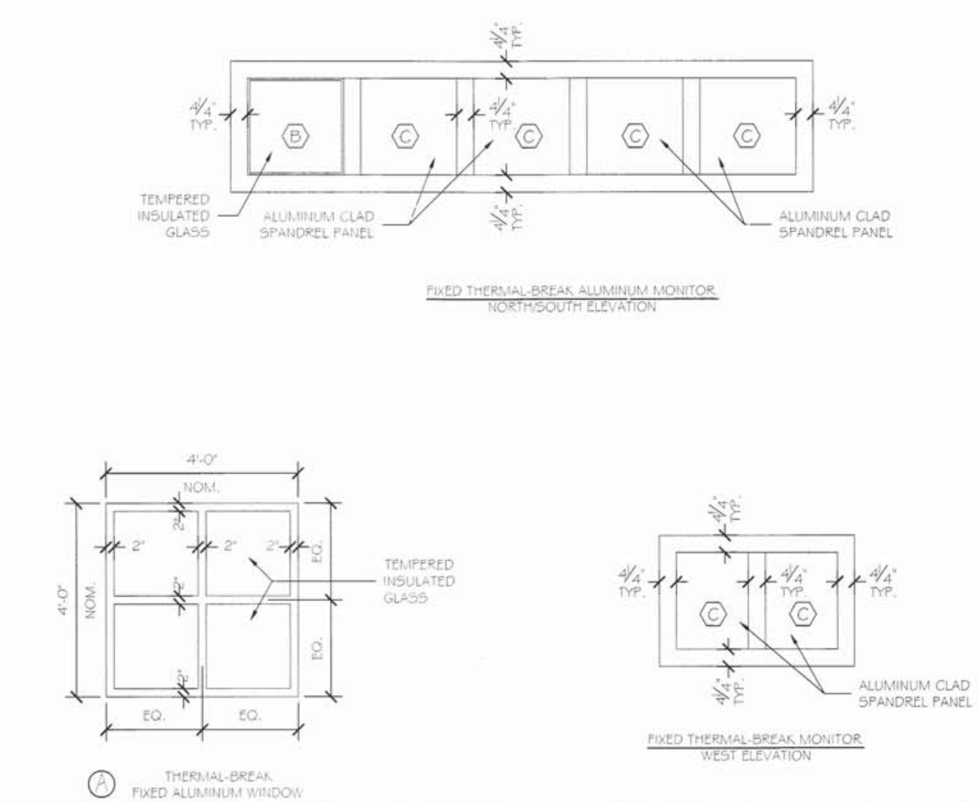

WINDOW TYPES — NO SCALE

GRANT HAYS ASSOCIATES
ARCHITECTURE & INTERIOR DESIGN
P.O. BOX 6179 FALMOUTH MAINE 04105
207.871.5900 www.granthays.com

SEAL: LICENSED ARCHITECT — MICHAEL F. HAYS No. 1724 — STATE OF MAINE

Michael F. Hays

REVISIONS

DRAWING NAME
FALMOUTH SPUR TOLL PLAZA ORT CONVERSION
MAINE TURNPIKE AUTHORITY / MATB CORP.

SHEET
DOOR / WINDOW / FINISH SCHEDULES & ABBREVIATIONS / SYMBOLS LEGENDS / NOTES

DATE 13 MAY '15
SCALE AS NOTED
DRAWN MFH/mgk
JOB NO. 150409
SHEET 152

COPYRIGHT
REPRODUCTION OR REUSE OF THIS DOCUMENT WITHOUT WRITTEN PERMISSION FROM GRANT HAYS ASSOCIATES IS PROHIBITED.

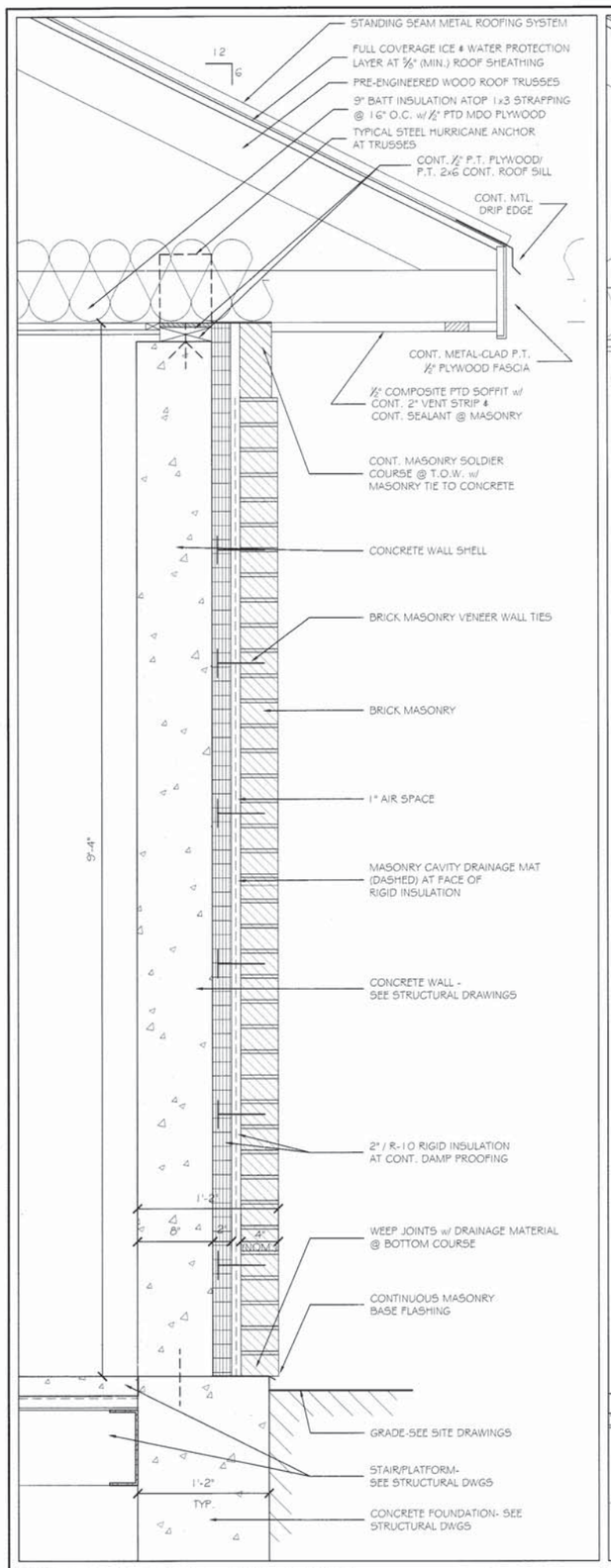

① TYPICAL EXTERIOR WALL SECTION 1 1/2"=1'-0"

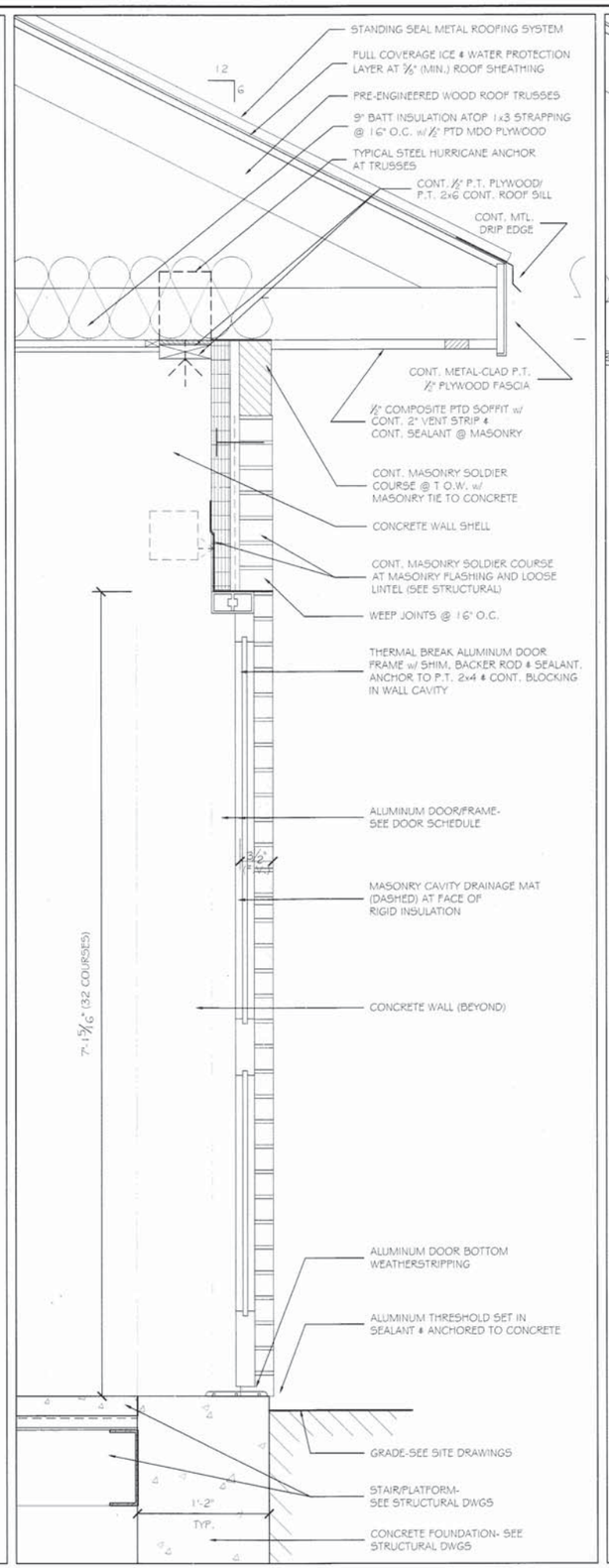

② TYPICAL EXTERIOR WALL SECTION @ DOOR 1 1/2"=1'-0"

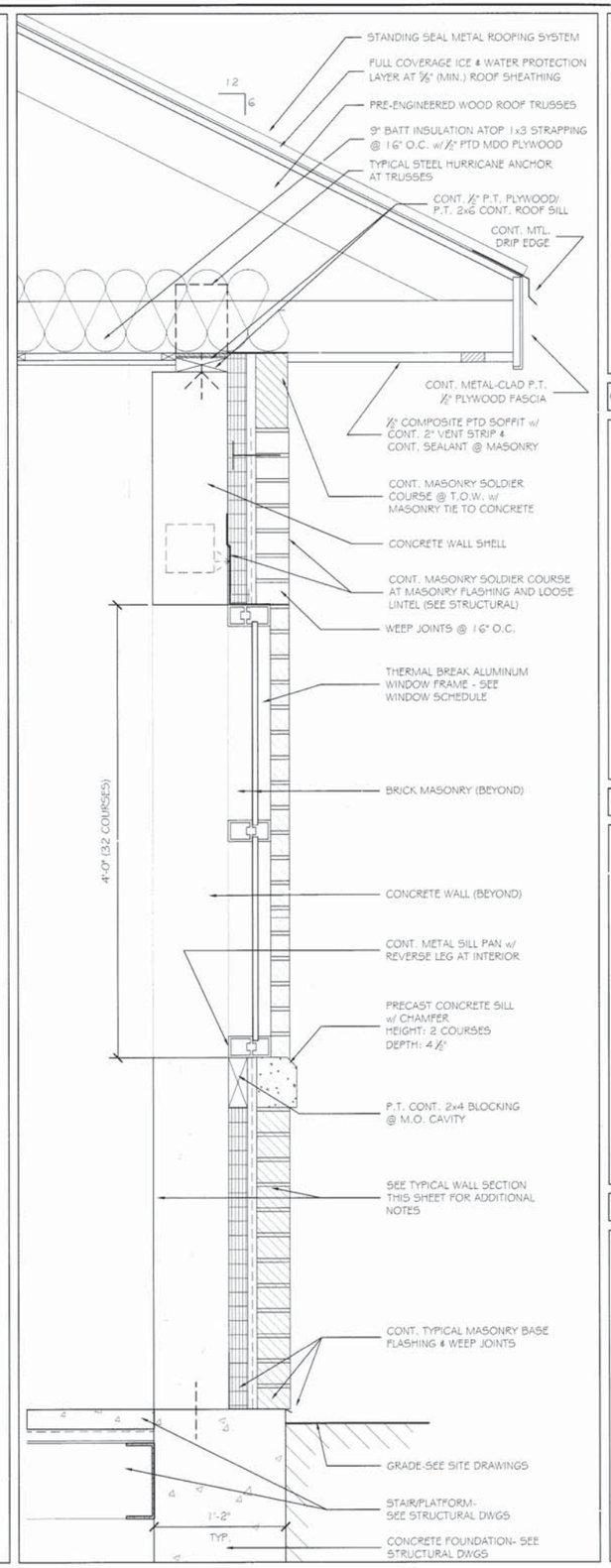

③ TYPICAL EXTERIOR WALL SECTION @ WINDOW 1 1/2"=1'-0"

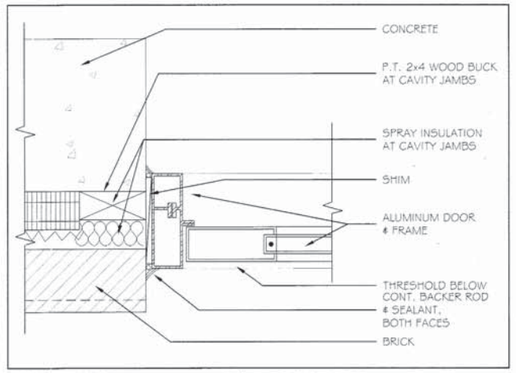

④ EXTERIOR DOOR JAMB DETAIL 3"=1'-0"

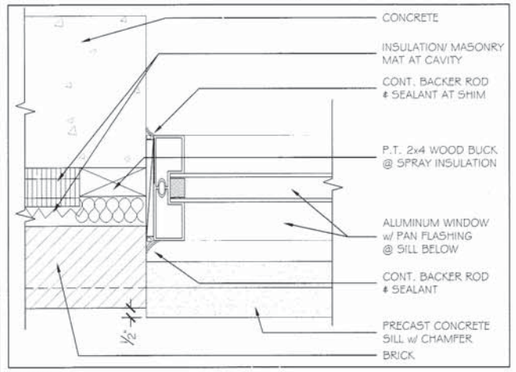

⑤ EXTERIOR WINDOW JAMB DETAIL 3"=1'-0"

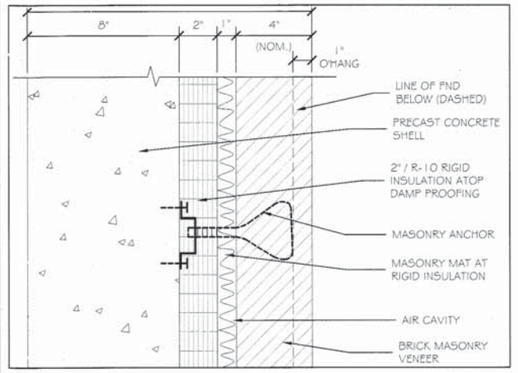

⑥ EXTERIOR WALL PLAN DETAIL 3"=1'-0"

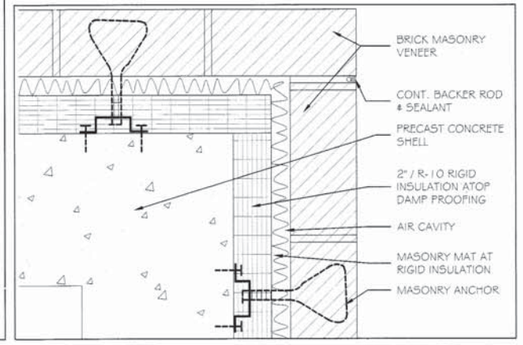

⑦ MASONRY EXPANSION JOINT DETAIL 3"=1'-0"

GRANT HAYS ASSOCIATES
ARCHITECTURE & INTERIOR DESIGN
P.O. BOX 6179 FALMOUTH MAINE 04105
207.871.5900 www.grantHays.com

SEAL

LICENSED ARCHITECT
MICHAEL F. HAYS
No. 1724
STATE OF MAINE

REVISIONS

DRAWING NAME

FALMOUTH SPUR TOLL PLAZA ORT CONVERSION

MAINE TURNPIKE AUTHORITY / MTB CORP.

SHEET

TYPICAL EXTERIOR WALL SECTIONS & DETAILS (NORTH STAIRCASE)

DATE
13 MAY '15

SCALE
1 1/2"=1'-0"

DRAWN
MFH/mgk

JOB NO.
150409

SHEET
153

COPYRIGHT
REPRODUCTION OR REUSE OF THIS DOCUMENT WITHOUT WRITTEN PERMISSION FROM GRANT HAYS ASSOCIATES IS PROHIBITED.