Date:1/21/2014

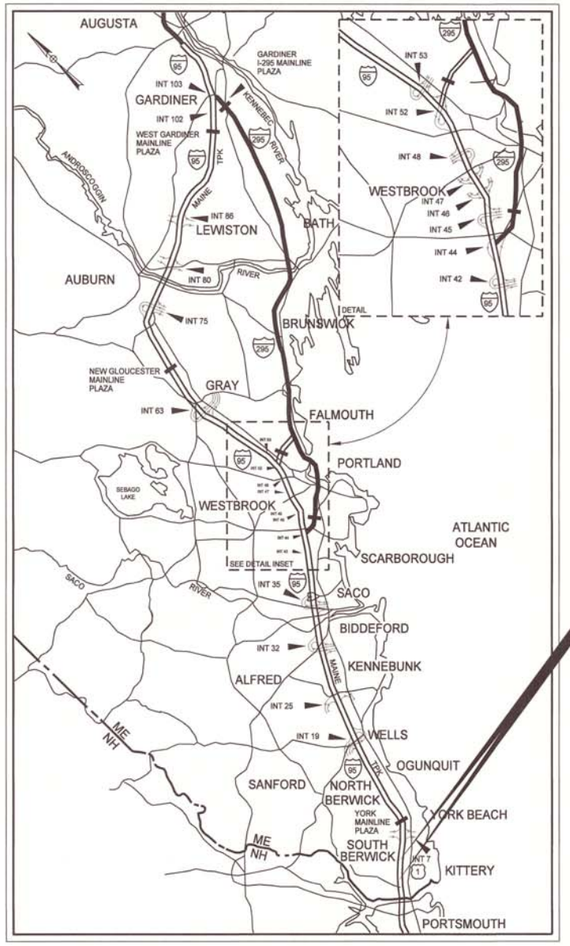

LOCATION MAP

MAINE TURNPIKE

THE GOLD STAR MEMORIAL HIGHWAY

MAINE TURNPIKE AUTHORITY

DANIEL E. WATHEN, CHAIR
DIANE M. DOYLE, VICE CHAIR
GERARD P. CONLEY, SR., MEMBER
JAMES F. CLOUTIER, MEMBER
JOHN E. DORITY, MEMBER
ROBERT D. STONE, MEMBER
BRUCE A. VAN NOTE, MEMBER EX-OFFICIO

S. PETER MILLS, EXECUTIVE DIRECTOR

Contract 2014.05
Wearing Surface Replacement and Substructure Rehabilitation
York River Bridges
Mile 5.20
Web Stiffener Rehabilitation
Cutts Road Bridge
Mile 3.10

CONTRACT 2014.05
WEARING SURFACE REPLACEMENT AND SUBSTRUCTURE REHABILITATION YORK RIVER BRIDGES (MILE 5.20)
WEB STIFFENER REHABILITATION CUTTS ROAD BRIDGE (MILE 3.10)

INDEX OF SHEETS

SHEET NO.	DESCRIPTION
1	Title Sheet
2	Estimated Quantities
3-5	General Construction Notes (3 Sheets)
6	Bridge Plan and Elevation
7	Superstructure Transverse Section
8-9	Bridge Construction Phasing (2 Sheets)
10-14	Roadway Plans (5 Sheets)
15	Permanent Sign Details & Summary
16-19	Maintenance of Traffic Notes & Details for York River Bridges (4 Sheets)
20	Guardrail and Catch Basin Details
21-34	Maintenance of Traffic Plans (14 Sheets)
35-43	Maintenance of Traffic Cross Sections (11 Sheets)
44-46	Framing Plan (3 Sheets)
47	Deck End Reconstruction Details (1 of 2)
48	Deck End Reconstruction Details (2 of 2)
49	Pin and Link Expansion Joint Details
50	Abutment Expansion Joint Details
51-54	Concrete Transition Barrier Details (4 Sheets)
55	Bridge Rail Rehabilitation Details
56	Pin and Link Repair Details
57	Bridge Drain Pipe Extension Details
58	Pier Bearing Repair Details
59	Abutment Bearing Replacement Details
60	NB Bridge Abutment 1 Repair Areas
61	NB Bridge Abutment 2 Repair Areas
62	SB Bridge Abutment 1 Repair Areas
63	SB Bridge Abutment 2 Repair Areas
64	Typical Concrete Repair Details
65-76	NB Bridge Pier Bent Concrete Repair Areas (12 Sheets)
77-88	SB Bridge Pier Bent Concrete Repair Areas (12 Sheets)
89	Pile Repairs Location Plan
90	Type 1 Pile Repair Details
91	Type 2 Pile Repair Details
92	Type 3 Pile Repair Details
93-98	Disturbance Areas & Erosion Sediment Control (6 Sheets)
99	Reinforcing Steel Schedule
100	Right of Way Map
101	Cutts Road Estimated Quantities, Notes & Details
102	Cutts Road Framing Plan & Girder Elevation
103	Maintenance of Traffic Notes & Details for Cutts Road Bridge

APPROVED:

MAINE TURNPIKE AUTHORITY

PETER S. MERFELD, P.E. - CHIEF OPERATIONS OFFICER — DATE 01-23-14

STEPHEN R. TARTRE, P.E., - DIRECTOR OF ENGINEERING & BUILDING MAINTENANCE — DATE 1/23/14

VHB Vanasse Hangen Brustlin, Inc.

STATE OF MAINE TIMOTHY S. BRYANT No. 12090 LICENSED PROFESSIONAL ENGINEER

Timothy S. Bryant, P.E.
Consultant Project Manager — DATE 1-23-2014

Filename: ...\st\planset\001_title_01.dgn

YORK RIVER BRIDGES

ESTIMATED QUANTITIES

ITEM NO.	DESCRIPTION	QUANTITY	UNIT
201.31	Removal of Debris	1	LS
202.12	Removing Existing Structural Concrete	4	CY
202.202	Removing Pavement Surface	10600	SY
202.2021	Remove Pavement Surface - Bridge Deck	8525	SY
202.206	Removing Rumble Strips	4000	LF
203.2	Common Excavation	4710	CY
203.25	Granular Borrow	950	CY
206.061	Structural Earth Excavation - Drainage Minor Structures Below Grade	315	CY
304.09	Aggregate Base Course - Crushed	1150	CY
304.1	Aggregate Subbase Course - Gravel	2300	CY
403.207	Hot Mix Asphalt, 19.0 MM Nominal Maximum Size	1060	TON
403.208	Hot Mix Asphalt, 12.5 MM HMA Surface	1520	TON
403.211	Hot Mix Asphalt, Shimming	50	TON
403.213	Hot Mix Asphalt, 12.5 MM Nominal Maximum Size, Base	260	TON
409.15	Bituminous Tack Coat, Applied	6450	GAL
419.30	Sawing Bituminous Pavement	8452	LF
501.97	Type 1 Pile Repairs	192	EA
501.98	Type 2 Pile Repairs	40	EA
501.99	Type 3 Pile Repairs	13	EA
502.21	Structural Concrete Abutments and Retaining Walls	8	CY
502.29	Structural Concrete Wearing Surface on Bridges	1	LS
502.42	Structural Concrete Roadway and Sidewalk Slab on Steel Bridge	175	CY
502.71	Bridge Drain Extension	96	EA
503.12	Reinforcing Steel, Fabricated and Delivered	26000	LB
503.13	Reinforcing Steel, Placing	26000	LB
504.814	Structural Steel Repairs - Link Plates Rehabilitation	48	EA
506.17	Surface Preparation of Existing Structural Steel	1	LS
506.9104	Zinc Rich Coating System (Field Applied)	1	LS
506.9108	Containment System and Pollution Control	1	LS
506.9109	Disposal of Hazardous or Toxic Material	1	LS
507.0926	Furnish Aluminum Bridge Railing Components	1	LS
507.0928	Aluminum Bridge Railing - Rail Section Replace	140	LF
507.0929	Aluminum Bridge Railing - 2 Bar Post Remove & Reset	1	EA
507.095	Aluminum Bridge Railing - Splice Modification	64	EA
515.202	Clear Protective Coating for Concrete Surfaces	12500	SY
518.391	Repairing Granite Curb Bedding Mortar	50	LF
518.4	Epoxy Injection Crack Repair	93	LF
518.6313	Abutment and Bridge Seat Repair	191	SF
518.6314	Pier Repairs	712	SF
518.8	Partial Depth Concrete Deck Repairs	2000	SF
520.2215	Bridge Joint Modifications	10	EA
523.32	Bearing Rehabilitation Type A	14	EA
523.33	Bearing Rehabilitation Type B	15	EA
523.521	Bearing Removal & Installation	32	EA
523.5404	PTFE Elastomeric Bearings, Expansion	32	EA
524.4	Protective Shield - Steel Girders	350	SY
524.7211	Jacking Existing Superstructure	1	LS
526.302	Temporary Concrete Barrier, Type 1 - 20 ft	20	EA
526.306	Temporary Concrete Barrier, Type 1 - Supplied by the Authority	1	LS
526.342	Permanent Concrete Transition Barrier - Modified	8	EA
527.341	Work Zone Crash Cushions - TL3	4	UNIT
603.1515	Slotted Drain	1275	LF
603.155	12 Inch Reinforced Concrete Pipe - Class III	13	LF
603.28	Concrete Collar for Reinforced Concrete Pipe	2	EA
604.09	Catch Basin Type BI	4	EA
604.181	Adjusting Manhole or Catch Basin to Grade	8	EA
604.183	Rebuild Catch Basin To Grade	4	EA
604.244	Catch Basin Type F4	2	EA
604.40	Secure Catch Basin	10	EA
605.11	12 Inch Underdrain, Type C	1084	LF
606.1721	Bridge Transition - Type 1	4	EA
606.1723	Bridge Transition - Type III	4	EA
606.1780	Guardrail Beam	25	LF
606.24	Guardrail Type 3d - Single Rail	188	LF
606.277	Terminal End - Trailing End	2	EA
606.35	Permanent Guardrail Delineator Post	6	EA
606.352	Reflectorized Beam Guardrail Delineator	86	EA
606.355	Delineator Post - Remove and Stack	25	EA
606.356	Permanent Flexible Delineator Post	29	EA

YORK RIVER BRIDGES

ESTIMATED QUANTITIES

ITEM NO.	DESCRIPTION	QUANTITY	UNIT
606.3605	Guardrail - Remove, Modify and Reset, Single Rail	2326	LF
606.3606	Guardrail - Remove, Modify and Reset, Double Rail	2375	LF
606.48	Single Galvanized Steel Post	10	EA
606.8	Guardrail 350 FLEAT Terminal	2	EA
610.08	Plain Riprap	140	CY
613.319	Erosion Control Blanket	330	SY
615.07	Loam	310	CY
618.1401	Seeding Method Number 2, Plan Quantity	51	UNIT
619.12	Mulch	51	UNIT
620.58	Erosion Control Geotextile	225	SY
627.73	Temporary 6" Inch Pavement Marking Tape, White or Yellow	92700	LF
627.77	Removing Existing Pavement Markings	14300	SF
629.05	Hand Labor, Straight Time	80	HR
631.12	All-Purpose Excavator (Including Operator)	20	HR
631.171	Truck - Small (Including Operator)	30	HR
631.36	Foreperson	30	HR
639.19	Field Office Type B	1	EA
644.1	Glare Screen - Supplied by Authority	4300	LF
645.105	Remove and Stack Sign	2	EA
645.12	Overhead Guide Sign	4	EA
645.252	Mainline Guide Signs, Type 1 - Supplied by Authority	1	LS
652.3	Flashing Arrow Board	1	EA
652.312	Type III Barricades	2	EA
652.33	Drum	190	EA
652.34	Cones	50	EA
652.341	Temporary Flexible Delineator Post	20	EA
652.35	Construction Signs	1446	SF
652.361	Maintenance of Traffic Control Devices	1	LS
652.39	Portable Light Towers	2	EA
652.41	Portable Changeable Message Sign	2	EA
652.45	Truck Mounted Attenuator	45	CD
655.301	Weigh Station Warning Signal	1	LS
655.51	Embedded Galvanic Anodes	1500	LF
656.50	Baled Hay, In Place	30	EA
656.632	30 inch Temporary Silt Fence	4810	LF
656.64	Boom Supported Floating Silt Fence	450	LF
659.10	Mobilization	1	LS

Date:1/24/2014

Filename: ...\cad\st\planset\002_Quant.dgn

Scale:

No.	Revision	By	Date

Designed by:

VHB Vanasse Hangen Brustlin, Inc.

CONSULTANT PROJECT MANAGER: T. BRYANT

	By	Date		By	Date
Designed	RSB	1/14	Checked	KJG	1/14
Drawn	BJM	1/14	In Charge of	TSB	1/14

VANASSE HANGEN BRUSTLIN, INC.
500 Southborough Dr.
Suite 105B
South Portland, ME 04106
TEL (207) 889-3150
FAX (207) 253-5596

MAINE TURNPIKE

THE GOLD STAR MEMORIAL HIGHWAY

MTA PROJECT MANAGER: Ralph C. Norwood IV, P.E.

BRIDGE REHABILITATION
YORK RIVER BRIDGES

ESTIMATED QUANTITIES

SHEET NUMBER:

CONTRACT: 2014.05

SPECIFICATIONS

Design: AASHTO LRFD Bridge Design Specifications, 2012 with 2013 Interims.

Construction: State of Maine Department of Transportation Standard Specifications, Revision of December 2002.

State of Maine Department of Transportation Standard Details for Highways and Bridges, Revision of December of 2002, with all revisions thereto.

AASHTO LRFD Bridge Construction Specifications, Third Edition with 2010 Interims

DESIGN LOADING

Live Load (for new components) ..... HL 93
Live Load (for existing components) ..... HS 20-44

NEW MATERIALS

Concrete for Bridge Deck Repairs & Wearing Surface ..... Class AAA - Deck
Concrete (Unless noted otherwise) ..... Class AAA
Reinforcing Steel ..... ASTM A615/A615M, Grade 60

Structural Steel:
All Material (except as noted) ..... ASTM A709/A709M, Grade 50
High Strength Bolts (except as noted) ..... ASTM A325, Type 1

BASIC DESIGN STRESSES (NEW MATERIALS)

Concrete ..... $f'c$ = 4,500 psi

Reinforcing Steel ..... f_y = 60,000 psi
Structural Steel:
ASTM A 709/A 709M, Grade 50 ..... F_y = 50,000 psi
ASTM A 709/A 709M, Grade 36 ..... F_y = 36,000 psi
ASTM A 325 ..... F_μ = 120,000 psi

TRAFFIC DATA (I-95)

AADT 27,076
Design Speed (MPH) (for existing) 70
Design Speed (MPH) (for median x-overs) 60
Functional Class ..... Principal Arterial

HYDROLOGIC DATA

Mean Low Water (MLW) ..... -5.05 ft
Mean High Water (MHW) ..... 3.55 ft
Extreme High Tide ..... 7.35 ft
Mean Sea Level ..... -0.75 ft

GENERAL CONSTRUCTION NOTES

1. All details shall be in conformance with Maine Department of Transportation (MaineDOT) Standard Details Highways and Bridges latest revision and MaineDOT Best Management Practices for Erosion and Sediment Control latest revision unless otherwise included in these plans.

2. There are no permanent or temporary easements associated with this project. All work shall be completed within the existing Right of Way. See existing Right-of-Way Map Sheet for limits of existing Right-of-Way.

3. The Contractor shall submit his proposed staging area(s) and field trailer location to the Resident for approval prior to starting work. A portion of existing weigh station areas NB & SB may be used as project staging areas.

4. The Contractor shall provide, set, maintain and remove navigational aids in the river, as requested by the Resident. The navigational aids shall be positioned to advise boaters of the construction hazards ahead. Additional navigational aids may be needed depending on Contractor activities. Payment for obtaining, setting, maintaining, and removing the navigational aids shall be incidental to the contract.

5. The existing bearings shall be delivered by the Contractor to the MTA Crosby Yard. Any additional portions of the existing bridge removed by the Contractor shall become the property of the Contractor. The steel portions of the York River and Cutts Road existing bridges are coated with a lead-based paint system. The Contractor is responsible for the containment, proper management and disposal of all lead-contaminated hazardous waste generated by the work of this project.

6. For additional details referenced or not shown in these drawings, see the State of Maine, Department of Transportation Standard Details, Highways and Bridges, December 2002 with updates.

7. Copies of the As-Built plans are posted on the Maine Turnpike Authority website at www.maineturnpike.com/project-and-planning/construction contracts. The completeness and accuracy of these plans is not guaranteed.

8. Chamfer all exposed new concrete edges ¾" unless otherwise noted.

9. The proposed elevations shown in these plans are based on NAVD 88 datum. The as-built plans from 1972 and 1946 are based on the NGVD 29 datum.

10. Protective coating for concrete surfaces shall be applied to the following areas:
All exposed surfaces of concrete curbs.
Fascia down to drip notch.
All exposed surfaces of concrete transition barriers.
Concrete wearing surfaces.
All exposed concrete surfaces of the abutments and pier caps

11. Any aluminum bridge rail, rail posts, and associated hardware removed shall be carefully salvaged by the Contractor and shall remain the property of the Maine Turnpike Authority. Payment shall be incidental to related Contract items.

12. The Contractor shall perform topographic survey of the deck surface so that the proposed wearing surface can be installed to the existing lines and grade. The Contractor shall also determine via field survey the existing bottom of beam elevations at the centerline of bearing at both abutments so that the existing bottom of beam elevations can be maintained after installation of the proposed replacement bearings. Payment shall be incidental to related contract items.

13. Areas of river debris removal shall be completed on a time and material basis using the hourly pay items included in the contract. The limits of river debris removal shall be as directed by the Resident. All debris removed shall be disposed of outside the limits of the turnpike right-of-way in accordance with the Maine Department of Environmental Protection Solid Waste Regulations. Debris shall not be allowed to float downstream.

14. Final pavement marking lines on the Maine Turnpike will be installed by the Maine Turnpike Authority.

EARTHWORK SUMMARY - YORK RIVER BRIDGES

COMMON EXCAVATION FOR ESTIMATE

	I-95
Common Excavation	3,594 CY
Structural Earth Excavation	314 CY
Grubbing in Fill	767 CY
Pavement Removal	346 CY
Subtotal	5020 CY
Total Common Excavation	5020 CY

FILL FOR BORROW CALCULATIONS

	I-95
Common Fill (From Cross Section)	161 CY
Subtotal	161 CY
Total Fill	161 CY

AVAILABLE COMMON EXCAVATION FOR BORROW CALCULATIONS

	I-95
(1) Total Common Excavation	5,020 CY
Deductions:	
Grubbing	767 CY
Existing Pavement Removal	345 CY
(2) Total Deductions:	1,112 CY
Total Available Common Excavation	3,908 CY
Total Available Non-Rock Excavation	3,908 CY

COMPUTATION OF COMMON BORROW FOR ESTIMATE

	I-95
(3) Total Fill	161 CY
Total Available Non-Rock Excavation	3,908 CY
(4) Total Available Excavation	3,747 CY
(5) Total Deficit	0 CY

Date: 1/23/2014

Filename: ...\st\planset\003_Notes_01.dgn

Scale:

No.	Revision	By	Date

Designed by:

Vanasse Hangen Brustlin, Inc.

CONSULTANT PROJECT MANAGER: T. BRYANT

	By	Date		By	Date
Designed	RSB	1/14	Checked	KJG	1/14
Drawn	CLC	1/14	In Charge of	TSB	1/14

VANASSE HANGEN BRUSTLIN, INC.
500 Southborough Dr.
Suite 105B
South Portland, ME 04106
TEL (207) 889-3150
FAX (207) 253-5596

MAINE TURNPIKE

THE GOLD STAR MEMORIAL HIGHWAY

MTA PROJECT MANAGER: Ralph C. Norwood IV, P.E.

BRIDGE REHABILITATION
YORK RIVER BRIDGES
GENERAL CONSTRUCTION NOTES
(1 OF 3)

CONTRACT: 2014.05

SHEET NUMBER:
3 OF 103

EROSION CONTROL

1. The anticipated erosion control devices are shown on the Disturbance Areas & Erosion Sediment Control Plans.

2. All temporary and permanent erosion control devices shall be installed in accordance with the Maine Department of Transportation Best Management Practices.

3. Erosion Control Blanket, Item 613.319 shall be installed on any disturbed 2:1 slopes from the top to toe of slope. Loam and seed shall be placed prior to the installation of the erosion control blanket.

GUARDRAIL

1. Connections for proposed guardrail to existing guardrail shall be incidental to the proposed guardrail items, unless otherwise noted in the plans.

2. Contractor shall stockpile all guardrail to be removed and reset, removed and disposed and removed, modified and reset until guardrail installation has been complete. Stockpiling the guardrail shall be incidental to Items 606.1721, 606.1723. All usable existing guardrail, as determined by the Resident, shall be modified and reset prior to being paid to install new guardrail.

3. At the end of each work day, all guardrail within work areas accessible to traffic shall have an approved crashworthy end treatment.

4. Connections for proposed guardrail to existing guardrail shall be incidental to the proposed guardrail items.

5. For all new guardrail Type 3d W-Beam, offset blocks shall be non-wood conforming to NCHRP 350 test level.

6. All proposed guardrail and reset guardrail shall be installed in a manner to avoid drainage structures and utilities.

UTILITIES

1. Existing utilities on these plans were compiled from existing plans and various other sources. Locations are not guaranteed to be accurate nor is it guaranteed that all utilities are shown. No separate or additional compensation will be allowed to the Contractor due to any variance between the data shown on the plans and the actual field conditions encountered. No work shall be started until the owners of the various utilities are notified by the Contractor of the proposed construction. The Contractor is also required to call Dig Safe at 1-888-344-7233 at least 72 hours prior to the start of the work.

2. The Contractor shall notify the Resident 10 days prior to construction so the Resident can arrange for Maine Turnpike underground utility location. All proposed sign locations and excavation locations shall be marked at the notification time. Excavation will not be permitted until the Authority has located and marked its underground utilities, or notified the Resident there are no underground utilities in the marked areas.

The Authority has programmed two field visits for Maine Turnpike utility coordination on this project. Should the Contractor need additional sign locations and/or additional excavation locations marked, or should the Contractor fail to maintain the Authority's previously established Dig Safe marks, the Authority shall deduct the added marking costs from the Contractor's payments.

3. The contractor shall protect all existing utilities from damage during construction as directed by the Resident and approved by the utility owners.

4. The utilities involved in this project are:

Central Maine Power Company

5. The Contractor shall use caution when working in the vicinity of the CMP conduits located between the southern-most beams in the NB Bridge. The Contractor shall protect the conduit per Special Provision 524 Temporary Structural Supports (Protective Shielding - Steel Girders) or other methods as directed by the Resident.

6. The Contractor shall coordinate daily with CMP when construction activities will be in proximity to the utilities on the bridge to ensure a "Do Not Reclose" is requested and granted. Reference Special Provision Section 104.4.6.

ABUTMENT CONCRETE REPAIR NOTES

1. Prior to the start of concrete repairs the Resident and the Contractor shall sound all abutment surfaces to determine the repair limits.

2. Sawcut 1" deep along all limits of removal.

3. Chip concrete to the depth specified in Special Provision 518. If the removal limits change during the demolition process the Contractor shall notify the Resident. The Resident and Contractor shall agree on the revised pay limits prior to the Contractor continuing the removals.

4. Prepare and patch repair areas. See Specifications for surface preparation materials.

5. Removal of existing concrete bearing pedestals at abutments shall be paid as Item 202.12 Removing Existing Structural Concrete (Bridge Seat). Concrete for new pedestals shall be paid as Item 502.21 Structural Concrete, Abutments and Retaining Walls. Drilling and anchoring of reinforcing steel in pedestals shall be incidental to Item 502.21.

EPOXY INJECTION CRACK REPAIR

1. All crack repairs shall be completed by an individual qualified and experienced in the type of repair proposed.

2. All crack repairs shall be completed in accordance with Special Provision 518.

3. Prepare concrete surface and crack area by cleaning substrate with wire brush to remove laitance and contaminants. Blast clean the crack and concrete surface: do not use water.

4. Set injection ports along the length of the crack using high-modulus epoxy adhesive. Once set, seal ports and crack with same epoxy adhesive.

5. When the epoxy adhesive seal has cured, inject a high-modulus, low-viscosity epoxy such as Sikadur 35, Sikadur 55, or approved equal.

ABUTMENT NOTES

1. For approximate locations of abutment repairs, see NB and SB Bridge Abutment Repair Area Sheets. Actual repair areas will be determined by the Resident during construction.

2. The estimated repair quantities are based on an inspection completed in November 2012. An additional 50 SF of abutment repair and 25 LF of crack repair have been included at each abutment as a contingency.

3. Reinforcing steel shall have a minimum concrete cover of 2 inches in walls.

SUPERSTRUCTURE NOTES

1. Protective shielding shall be required per Special Provision Section 524.

2. Mortar for bedding and for joints in the granite curb shall be an approved non-shrink mortar.

3. Existing channel marker signs attached to the south fascia of the NB Bridge and the north fascia of the SB Bridge shall remain visible to boat traffic during construction.

DECK CONCRETE REPAIR NOTES

1. After removal of the existing wearing surface, waterproofing membrane, and shim prior to the start of deck concrete repairs, the Resident and the Contractor shall sound all deck concrete using a chain drag or other method approved by the Resident to determine the required repair limits.

2. Sawcut 1" deep along all limits of removal.

3. Chip concrete to the depth specified in Special Provision 518. If the removal limits change during the demolition process, the Contractor shall notify the Resident. The Resident and Contractor shall agree on the revised pay limits prior to the Contractor continuing the removals.

4. Prepare and patch repair areas. Install new reinforcing steel, drill and grout bars into existing concrete as required. See Special Provision 518 for surface preparation materials.

PIER REPAIR NOTES

1. Pier repair work shall include: providing access for pier inspection, pier surface patch repairs, epoxy injection crack repair and pile repairs.

2. Where pier cap concrete patch repairs are specified the work shall include removal of unsound concrete, deleterious materials and placement and curing of the repair materials.

3. The quantities of pier cap concrete patch repair noted on these drawings are based on a hands-on field inspection. The estimated quantities for each pier include an additional 5 SF for contingencies.

4. For approximate locations and areas of pier cap concrete patch repair see NB and SB Bridge Pier Bent Concrete Repair Areas Sheets. Actual repair areas shall be determined by the Resident during construction. Prior to the start of repairs the Resident and the Contractor shall sound all pier surfaces and agree on the repair limits.

5. For pier bent pile repairs, see Pile Repairs Location Plan and Pile Repair Details Sheets.

6. Drilling and anchoring of reinforcing steel in pier repair areas shall be included in Item 518.6314 Pier Repairs.

PERMANENT SIGNS

1. The permanent signs for this project will be supplied by MTA. Following project award, the Contractor shall provide a sign installation schedule to the Resident and coordinate receipt of the permanent signs from MTA.

2. The Contractor shall be responsible for furnishing and installing all mounting hardware, supports, foundations and auxilary equipment to install the MTA-supplied permanent signs.

SALVAGE EXISTING SIGNS AND SUPPORTS

1. All existing signs, support posts, removed foundations and associated hardware shall be salvaged to MTA. The Contractor shall remove and stack existing signs, supports, foundations and hardware and deliver these materials to the Sign Shop at Mile 58.3 Northbound in Cumberland. See Special Provision 645 for additional information.

Date:1/23/2014

Filename: ...\st\planset\004_Notes_02.dgn

Scale:

No.	Revision	By	Date

Designed by:

Vanasse Hangen Brustlin, Inc.

CONSULTANT PROJECT MANAGER: T. BRYANT

	By	Date		By	Date
Designed	RSB	1/14	Checked	KJG	1/14
Drawn	CLC	1/14	In Charge of	TSB	1/14

VANASSE HANGEN BRUSTLIN, INC.
500 Southborough Dr.
Suite 105B
South Portland, ME 04106
TEL (207) 889-3150
FAX (207) 253-5596

MAINE TURNPIKE

THE GOLD STAR MEMORIAL HIGHWAY

MTA PROJECT MANAGER: Ralph C. Norwood IV, P.E.

BRIDGE REHABILITATION
YORK RIVER BRIDGES

GENERAL CONSTRUCTION NOTES
(2 OF 3)

SHEET NUMBER:

CONTRACT: 2014.05

ELASTOMERIC BEARING NOTES

1. The contractor shall temporarily support the beams at each abutment and replace all of the the existing rocker bearings with new elastomeric bearings. The Contractor shall submit a shoring plan for approval by the Resident. The shoring plan shall be prepared and stamped by a Professional Engineer licensed in the State of Maine. All costs for jacking and shoring of the existing beams at the abutments for bearing replacements shall be included in the bearing pay item.

2. Elastomer shall be virgin Neoprene (Polychloroprene) meeting the requirements of AASHTO M251. The shear modulus of the elastomer shall be between 100 and 130 psi.

3. Vulcanizing of the elastomer to the steel plates shall be done during the primary mold process.

4. Sole plates and load plates shall meet the requirements of ASTM A709/A709M, Grade 50.

5. Horizontal PTFE at expansion bearings shall be dimpled and lubricated. Lubrication shall be supplied and installed per the bearing manufacturers recommendation to ensure a coefficient of friction less than or equal to 0.03 at 68 degrees F. Cost included in Bearing item.

6. All bearings shall be marked prior to shipping. The marks shall include the bearing location on the bridge and a direction arrow which points upstation. All marks shall be permanent and shall be visible after the bearing is installed.

7. Bearings shall be covered during transit.

8. All necessary precautions shall be taken to protect bearing components from field weld flash and spatter.

9. Sole plate shall be hot dip galvanized (shop applied) at both Abutments. See Special Provision Section 506.

BEARING ANCHOR BOLT NOTES

1. All anchor rods, nuts, and plate washers shall be galvanized after fabrication in accordance with ASTM A153. Anchor rods shall be fully threaded.

2. Burr threads on anchor rods after nuts tightened snug to prevent removal. Touch up damaged galvanized areas with zinc-rich paint. Cost included in Bearing item.

PIN AND LINK REPAIR NOTES

1. At all of the pin and link connections the existing link plates shall be removed, cleaned and painted, and reinstalled. Any pin nuts, pins or link plates damaged by the Contractor during link plate removal shall be repaired or replaced as directed by the Resident at the Contractor's expense. At the Contractor's option, instead of cleaning and painting the existing link plates they may be replaced with new stainless steel link plates of the same dimensions and same or better material properties. All costs for removal and replacement of the link plates shall be included in Item 504.814, Structural Steel Repairs - Link Plates Rehabilitation.

2. The Contractor shall temporarily support the suspended span beam at each pin and link connection. The Contractor shall submit a shoring plan for approval by the Resident. The shoring plan shall be prepared and stamped by a Professional Engineer licensed in the State of Maine. All costs for shoring of the suspended span beams during link plate removal shall be included in Item 504.814, Structural Steel Repairs - Link Plates Rehabilitation.

3. All exposed structural steel within 5 ft to either side of the centerline of the pin and link connections shall be cleaned and painted including diaphragms, shear locks, pin plates, beam webs and flanges. The pin plates and beam webs behind the link plates shall be cleaned and painted while the pin plates are temporarily removed. All costs for cleaning and painting of the structural steel including surface preparation, field painting containment and disposal of hazardous material shall be included in Items 506.17, 506.9104, 506.9108, 506.9109 respectively.

BRIDGE RAIL REHABILITATION NOTES

1. Retrofit all 16 of the splice bars in both the top and bottom rail of the existing two-bar aluminum bridge railing on each of side of both the NB and SB bridges as shown in these plans. All costs for the rail splice retrofits shall be paid under Item 507.095, Aluminum Bridge Railing - Splice Modification.

2. Replace the individual sections of bent bottom rail between existing splices where noted on the Bridge Plan and Elevation Sheet. Field measure the length of the rail sections requiring replacement and provide the measurements to the Resident. The Maine Turnpike Authority will supply used rail sections from existing stockpiles for the Contractor to install. Contractor shall pick up the used rail sections from the Maine Turnpike Authority Stockpiles. All costs for tansporting and installing the replacement rail sections, including removal of the existing rails and cutting over-long replacement sections to the required length if necessary, shall be included in Item 507.0928, Aluminum Bridge Railing - Rail Section Replace.

3. Replace missing bridge rail post anchor bolt nuts where noted on the Bridge Plan and Elevation Sheet. All costs for furnishing and installing all the missing anchor bolt nuts noted on the Bridge Plan and Elevation Sheet shall be included in Item 507.0926, Furnish Aluminum Bridge Railing Components.

4. Remove the bridge rail post that has missing and damaged anchor bolts where noted on the Bridge Plan and Elevation Sheet and reset it with a new complete rail post anchorage assembly. This work includes partially removing the existing concrete brush curb to the limits shown in the details on this sheet, taking care to leave the existing brush curb reinforcing steel in place, and forming and placement of new Structural Concrete to replace the brush curb after installation of the new post anchorage assembly. For details of the replacement post anchorage assembly refer to the Aluminum Railing Standard Details in the As-built Plans for the existing bridge included in these plans. All costs for resetting the bridge rail post, including furnishing all required materials and labor, shall be included in Item 507.0929, Aluminum Bridge Railing - 2 Bar Post Remove & Reset.

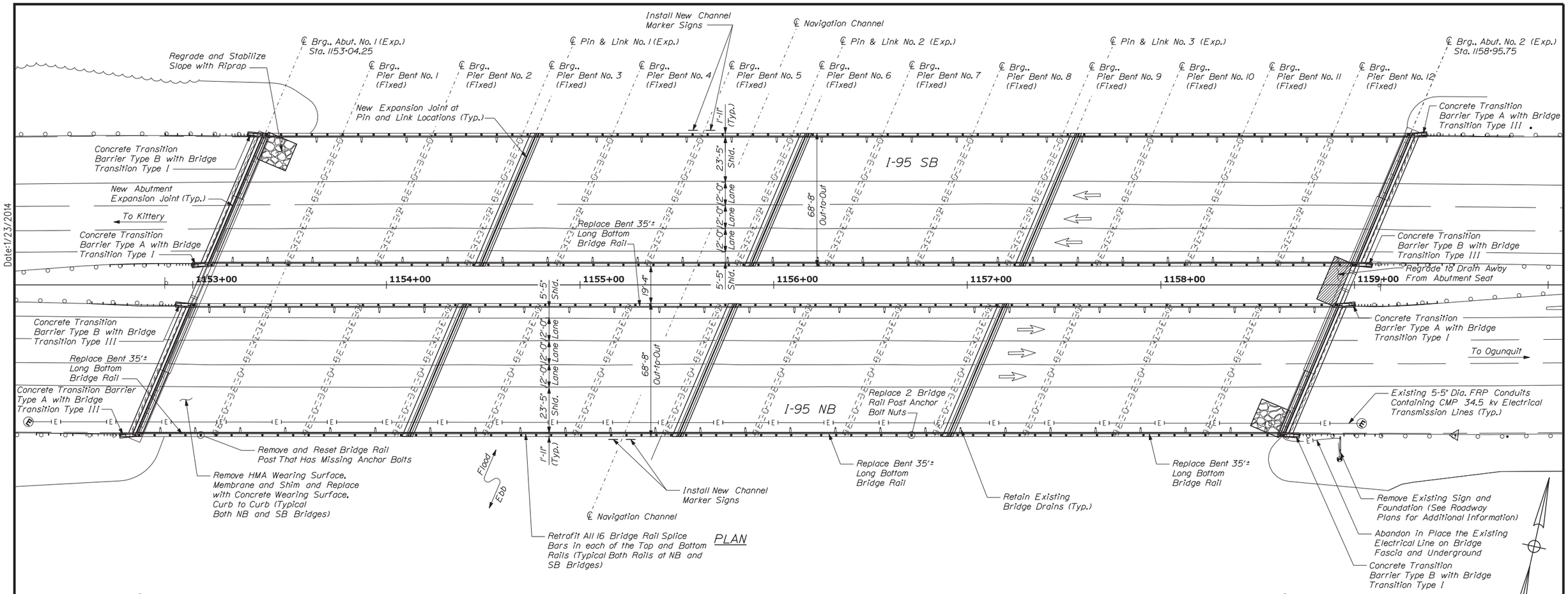

PLAN

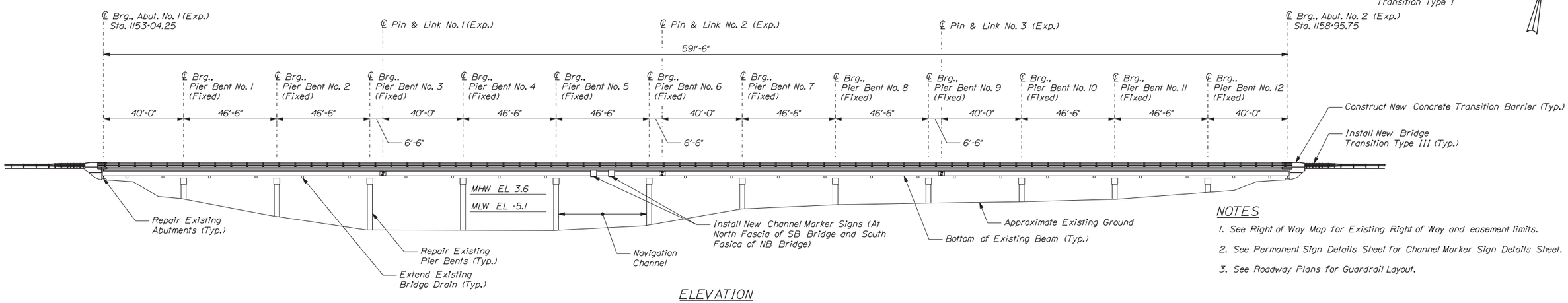

ELEVATION

NOTES

1. See Right of Way Map for Existing Right of Way and easement limits.
2. See Permanent Sign Details Sheet for Channel Marker Sign Details Sheet.
3. See Roadway Plans for Guardrail Layout.

Date: 1/23/2014

Filename: ...\st\planset\006_BDPlan_01.dgn

Scale: 1" = 25'-0"

25 0 25 50

Scale of Feet

No.	Revision	By	Date

Designed by:

VHB Vanasse Hangen Brustlin, Inc.

CONSULTANT PROJECT MANAGER: T. BRYANT

	By	Date		By	Date
Designed	RSB	1/14	Checked	KJG	1/14
Drawn	BJM	1/14	In Charge of	TSB	1/14

VANASSE HANGEN BRUSTLIN, INC.
500 Southborough Dr.
Suite 105B
South Portland, ME 04106
TEL (207) 889-3150
FAX (207) 253-5596

MAINE TURNPIKE

THE GOLD STAR MEMORIAL HIGHWAY

MTA PROJECT MANAGER: Ralph C. Norwood IV, P.E.

BRIDGE REHABILITATION
YORK RIVER BRIDGES

BRIDGE PLAN AND ELEVATION

SHEET NUMBER:

CONTRACT: 2014.05

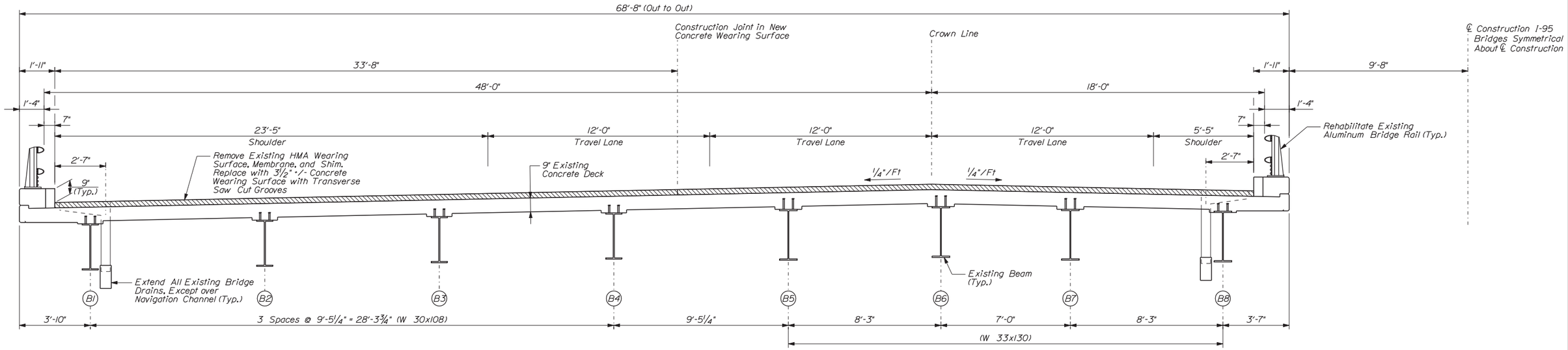

SUPERSTRUCTURE SECTION

(Southbound Looking Upstation)

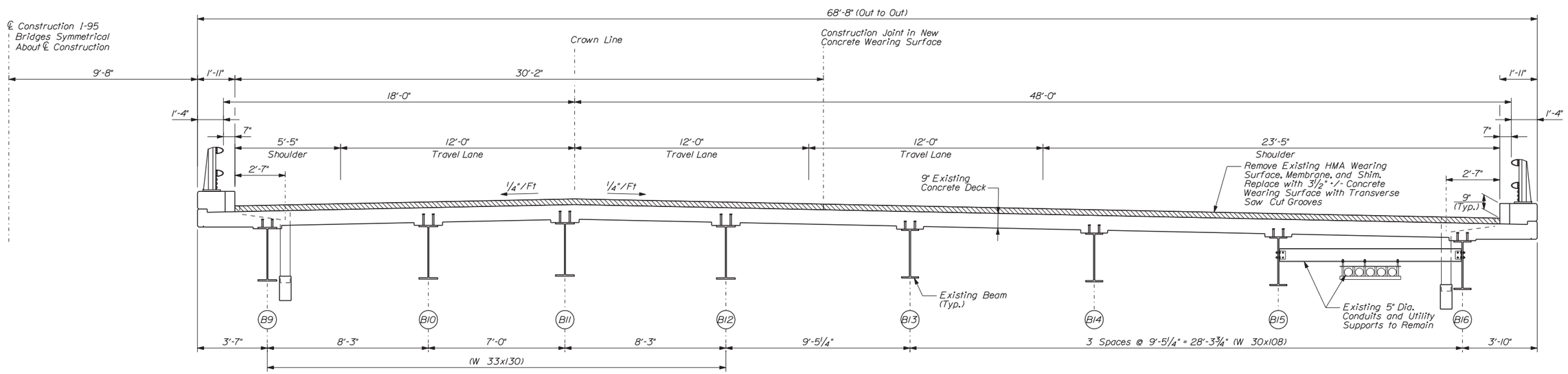

SUPERSTRUCTURE SECTION

(Northbound Looking Upstation)

Date: 1/23/2014

Filename: ...\planset\007_bridgetyp_01.dgn

Scale: ⅜" = 1'-0"

No.	Revision	By	Date

Designed by:

VHB Vanasse Hangen Brustlin, Inc.

CONSULTANT PROJECT MANAGER: T. BRYANT

	By	Date		By	Date
Designed	RSB	1/14	Checked	KJG	1/14
Drawn	BJM	1/14	In Charge of	TSB	1/14

VANASSE HANGEN BRUSTLIN, INC.
500 Southborough Dr.
Suite 105B
South Portland, ME 04106
TEL (207) 889-3150
FAX (207) 253-5596

MAINE TURNPIKE

THE GOLD STAR MEMORIAL HIGHWAY

MTA PROJECT MANAGER: Ralph C. Norwood IV, P.E.

BRIDGE REHABILITATION
YORK RIVER BRIDGES

SUPERSTRUCTURE TRANSVERSE SECTION

SHEET NUMBER:

CONTRACT: 2014.05

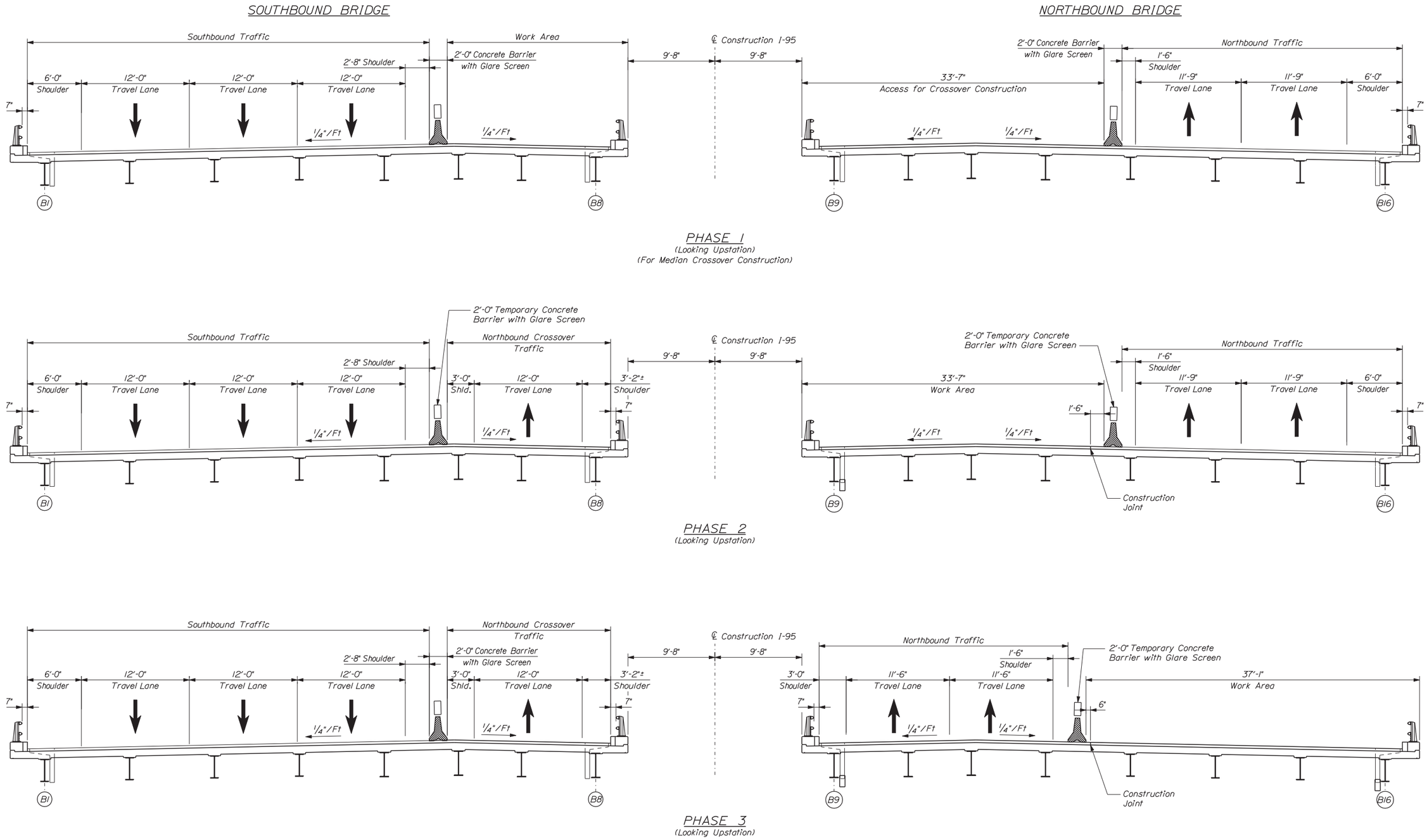

Date:1/23/2014

Filename: ...\008_bridge_phasing_01.dgn

Scale: 3/16" = 1'-0"

No.	Revision	By	Date

Designed by:

VHB Vanasse Hangen Brustlin, Inc.

CONSULTANT PROJECT MANAGER: T. BRYANT

	By	Date		By	Date
Designed	RSB	1/14	Checked	KJG	1/14
Drawn	BJM	1/14	In Charge of	TSB	1/14

VANASSE HANGEN BRUSTLIN, INC.
500 Southborough Dr.
Suite 105B
South Portland, ME 04106
TEL (207) 889-3150
FAX (207) 253-5596

MAINE TURNPIKE

THE GOLD STAR MEMORIAL HIGHWAY

MTA PROJECT MANAGER: Ralph C. Norwood IV, P.E.

BRIDGE REHABILITATION
YORK RIVER BRIDGES

BRIDGE CONSTRUCTION PHASING (1 OF 2)

SHEET NUMBER:

CONTRACT: 2014.05

SOUTHBOUND BRIDGE

NORTHBOUND BRIDGE

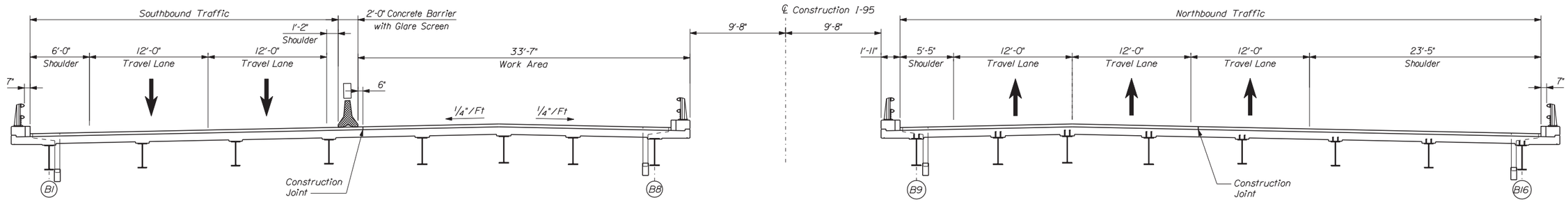

PHASE 4
(Looking Upstation)
(See Note 3)

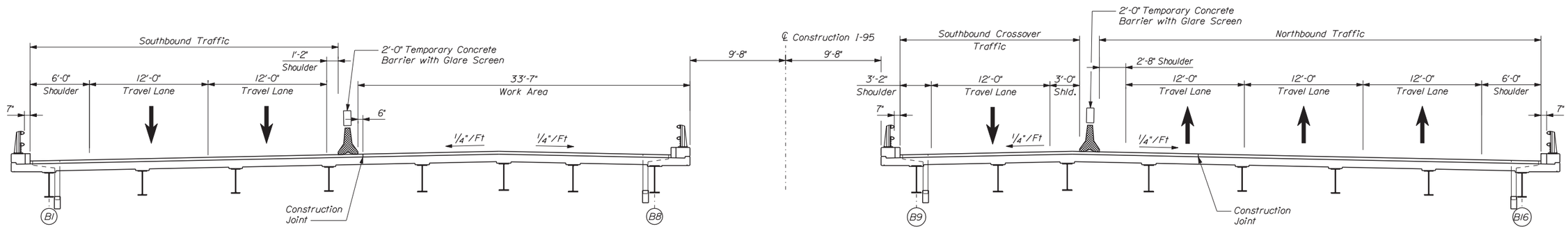

PHASE 5
(Looking Upstation)

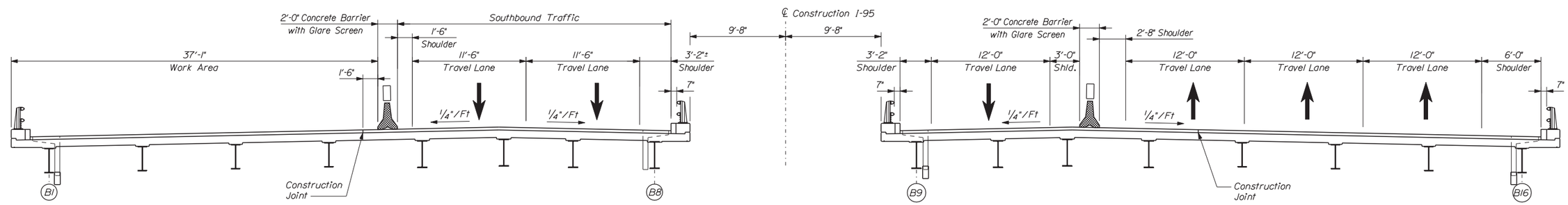

PHASE 6
(Looking Upstation)

BRIDGE CONSTRUCTION PHASING NOTES

1. Two 20'-0" minimum sections of temporary concrete barrier shall be placed at each deck expansion joint location.

2. Wearing surface replacement, deck expansion joint replacement at piers and abutments, bridge railing repairs, pin & link connection and structural steel rehabilitation, abutment bearing replacements and pedestal construction, and channel marker sign replacements shall be completed in phases as shown. All other work of the project including but not limited to bridge drain pipe extensions, pier bearing repairs, pier cap concrete repairs, pier column repairs, rehabilitation of retaining walls between the bridges, and abutment slope erosion repairs and regrading may be completed independent of the phasing shown.

3. Phase 4 is provided to allow the Contractor the ability to work on the Southbound Bridge during the period from November 1, 2014 to May 22, 2015 when two southbound lanes of traffic are adequate for I-95 southbound traffic flow. If the Contractor chooses not to utilize this phase, three southbound lanes shall be provided in a layout that matches the existing condition. Under no circumstances shall a lane of traffic utilize the median crossover during this phase.

4. The glare screen on the temporary concrete barrier for the crossover traffic shall run the entire distance of the crossover, which is approximately 3600 feet. The glare screen on the temporary concrete barrier that separates traffic from the work area shall be 700 feet long centered about the bridge.

Scale: 3/16" = 1'-0"

No.	Revision	By	Date

Designed by:

VHB Vanasse Hangen Brustlin, Inc.

CONSULTANT PROJECT MANAGER: T. BRYANT

	By	Date		By	Date
Designed	RSB	1/14	Checked	KJG	1/14
Drawn	BJM	1/14	In Charge of	TSB	1/14

VANASSE HANGEN BRUSTLIN, INC.
500 Southborough Dr.
Suite 105B
South Portland, ME 04106
TEL (207) 889-3150
FAX (207) 253-5596

MAINE TURNPIKE

THE GOLD STAR MEMORIAL HIGHWAY

MTA PROJECT MANAGER: Ralph C. Norwood IV, P.E.

BRIDGE REHABILITATION
YORK RIVER BRIDGES

BRIDGE CONSTRUCTION PHASING (2 OF 2)

SHEET NUMBER:

CONTRACT: 2014.05

Date: 1/23/2014

Filename: ...\009_bridge_phasing_02.dgn

ITEM 606.3606 - GUARDRAIL - REMOVE, MODIFY AND RESET, DOUBLE RAIL

STATION TO STATION	QUANTITY
STA. 1137+00, LT TO STA. 1150+50, RT	1350 LF

ITEM 419.3 - SAWING BITUMINOUS PAVEMENT

STATION TO STATION	QUANTITY
STA. 1141+60, LT TO STA. 1153+34, LT	1176 LF
STA. 1140+00, LT TO STA. 1152+00, LT	1200 LF
STA. 1140+00, RT TO STA. 1152+00, RT	1200 LF
STA. 1141+94, RT TO STA. 1152+70, RT	1079 LF
STA. 1140+00, LT TO STA. 1140+00, RT	18 LF

ITEM 605.11 - 12 INCH UNDERDRAIN TYPE C

STATION TO STATION	QUANTITY
STA. 1141+00, LT 0.0' TO STA. 1144+00, LT 0.0'	296 LF

ITEM 603.1515 - SLOTTED DRAIN

STATION TO STATION	QUANTITY
STA. 1141+05, LT 0.0' TO STA. 1144+00, LT 0.0'	295 LF

ITEM 604.09 - CATCH BASIN TYPE BI

STATION	QUANTITY
STA. 1141+00, LT 0.0'	1 EA

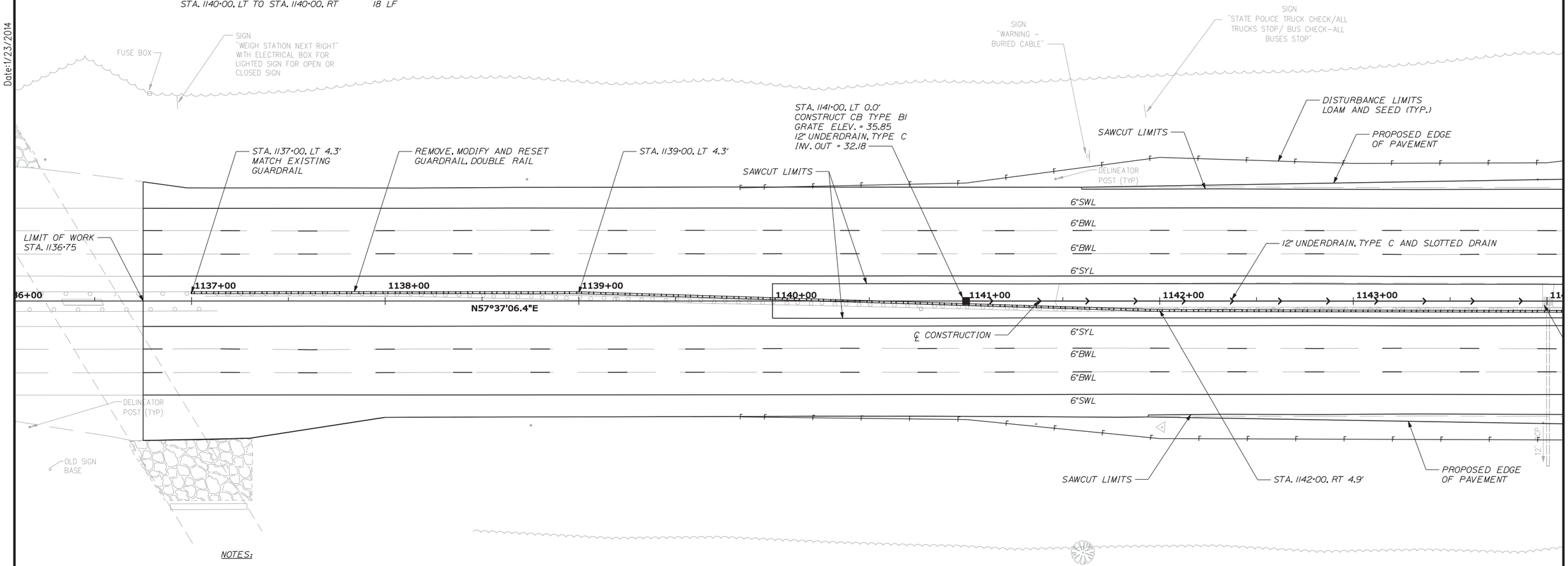

NOTES:

1. CONTRACTOR SHALL REPLACE ALL STEEL OFFSET BLOCKS WITH COMPOSITE OFFSET BLOCKS WITHIN DEFINED LIMITS. REPLACEMENT OF THE OFFSET BLOCKS SHALL BE INCIDENTAL TO THE REMOVE, MODIFY, AND RESET GUARDRAIL ITEM.
2. CONTRACTOR SHALL COORDINATE DRAINAGE AND GUARDRAIL POST SPACING WITH EXISTING AND PROPOSED DRAINAGE TO AVOID CONFLICTS.
3. THE PROPOSED ROADWAY WIDENING IN THE MEDIAN AND ON THE OUTSIDES OF THE ROADWAY ARE TO BE CONSTRUCTED FROM THE EXISTING TRAVELWAY PAVEMENT ELEVATIONS, AS DETERMINED IN THE FIELD, AND THE DETAILS AND CROSS SECTIONS PROVIDED. THE MEDIAN DETAIL AND CROSS SECTIONS ARE PROVIDED AS A GUIDE WITH THE ALGEBRAIC DIFFERENCE AT THE CENTERLINE TO BE 5% OR LESS.
4. THE CONTRACTOR SHALL CLEAN THE EXISTING DRAINAGE SYSTEM AND OBTAIN EXISTING DRAINAGE INVERTS FOR THE MEDIAN CATCH BASINS TO VERIFY THE EXISTING INVERT ELEVATIONS. THE PROPOSED AND EXISTING INVERTS OF THE 12" UNDERDRAIN, TYPE C, 12" SLOTTED DRAIN, AND GRATES ARE APPROXIMATE. THE CONTRACTOR SHALL COORDINATE WITH THE RESIDENT AND DRAINAGE MANUFACTURER PRIOR TO FINALIZING PROPOSED INVERTS, FRAME AND GRATE SIZES AND CONSTRUCTABILITY.

Scale: 25 0 25 50

No.	Revision	By	Date

Designed by:

VHB Vanasse Hangen Brustlin, Inc.

CONSULTANT PROJECT MANAGER: T. BRYANT

	By	Date		By	Date
Designed	PAC	1/14	Checked	TSB	1/14
Drawn	KDP	1/14	In Charge of	TSB	1/14

VANASSE HANGEN BRUSTLIN, INC.
500 Southborough Dr.
Suite 105B
South Portland, ME 04106
TEL (207) 889-3150
FAX (207) 253-5596

MAINE TURNPIKE

THE GOLD STAR MEMORIAL HIGHWAY

MTA PROJECT MANAGER: Ralph C. Norwood IV, P.E.

BRIDGE REHABILITATION
YORK RIVER BRIDGES

ROADWAY PLANS
(1 OF 5)

SHEET NUMBER:

CONTRACT: 2014.05

Date: 1/23/2014

Filename: ...\te\planset\010_HDPlan_01.dgn

ITEM 606.3605 - GUARDRAIL - REMOVE, MODIFY AND RESET, SINGLE RAIL

STATION TO STATION	QUANTITY
STA. 1149+32, RT TO STA. 1152+32, RT	300 LF
STA. 1150+50, LT TO STA. 1152+83, LT	233 LF
STA. 1150+50, RT TO STA. 1152+61, RT	211 LF
STA. 1151+23, LT TO STA. 1153+11, LT	188 LF

ITEM 606.277 - TERMINAL END - TRAILING END

STATION TO STATION	QUANTITY
STA. 1150+60.5, LT TO STA. 1150+73, LT	1 EA

ITEM 603.28 - CONCRETE COLLAR FOR REINFORCED CONCRETE PIPE

STATION TO STATION	QUANTITY
STA. 1149+00, LT	1 EA
STA. 1149+00, RT	1 EA

ITEM 606.24 - GUARDRAIL, TYPE 3D - SINGLE RAIL

STATION TO STATION	QUANTITY
STA. 1150+73, LT TO STA. 1151+23, LT	50 LF

ITEM 603.155 - 12 INCH RCP - CLASS III

STATION TO STATION	QUANTITY
STA. 1149+00, LT 87.1' TO STA. 1149+00, LT 88.7'	2 LF
STA. 1149+00, RT 81.6' TO STA. 1149+00, RT 92.6'	11 LF

ITEM 610.08 - PLAIN RIPRAP

STATION TO STATION	QUANTITY
STA. 1149+00, LT 88.7' TO STA. 1149+00, LT 92.7'	0.60 CY
STA. 1149+00, RT 92.6' TO STA. 1149+00, RT 96.6'	0.60 CY

ITEM 604.40 - SECURE CATCH BASIN GRATE

STATION	QUANTITY
STA. 1144+00, LT 0.0'	1 EA
STA. 1147+00, LT 0.0'	1 EA
STA. 1149+00, RT 10.5'	1 EA

ITEM 606.8 - GUARDRAIL 350 FLEAT TERMINAL

STATION TO STATION	QUANTITY
STA. 1148+94.5, RT TO STA. 1149+32.0, RT	1 EA

ITEM 605.11 - 12 INCH UNDERDRAIN TYPE C

STATION TO STATION	QUANTITY
STA. 1147+00, LT 0.0' TO STA. 1149+00, LT 1.0'	196 LF

ITEM 603.1515 - SLOTTED DRAIN

STATION TO STATION	QUANTITY
STA. 1144+05, LT 0.0' TO STA. 1147+00, LT 0.0'	295 LF

ITEM 604.181 - ADJUSTING MANHOLE OR CATCH BASIN TO GRADE

STATION	QUANTITY
STA. 1149+00, RT 10.5'	1 EA

ITEM 604.09 - CATCH BASIN TYPE BI

STATION	QUANTITY
STA. 1147+00, LT 0.0'	1 EA

ITEM 604.183 - REBUILDING CATCH BASIN TO GRADE

STATION	QUANTITY
STA. 1144+00, LT 0.0'	1 EA
STA. 1149+00, LT 1.0'	1 EA

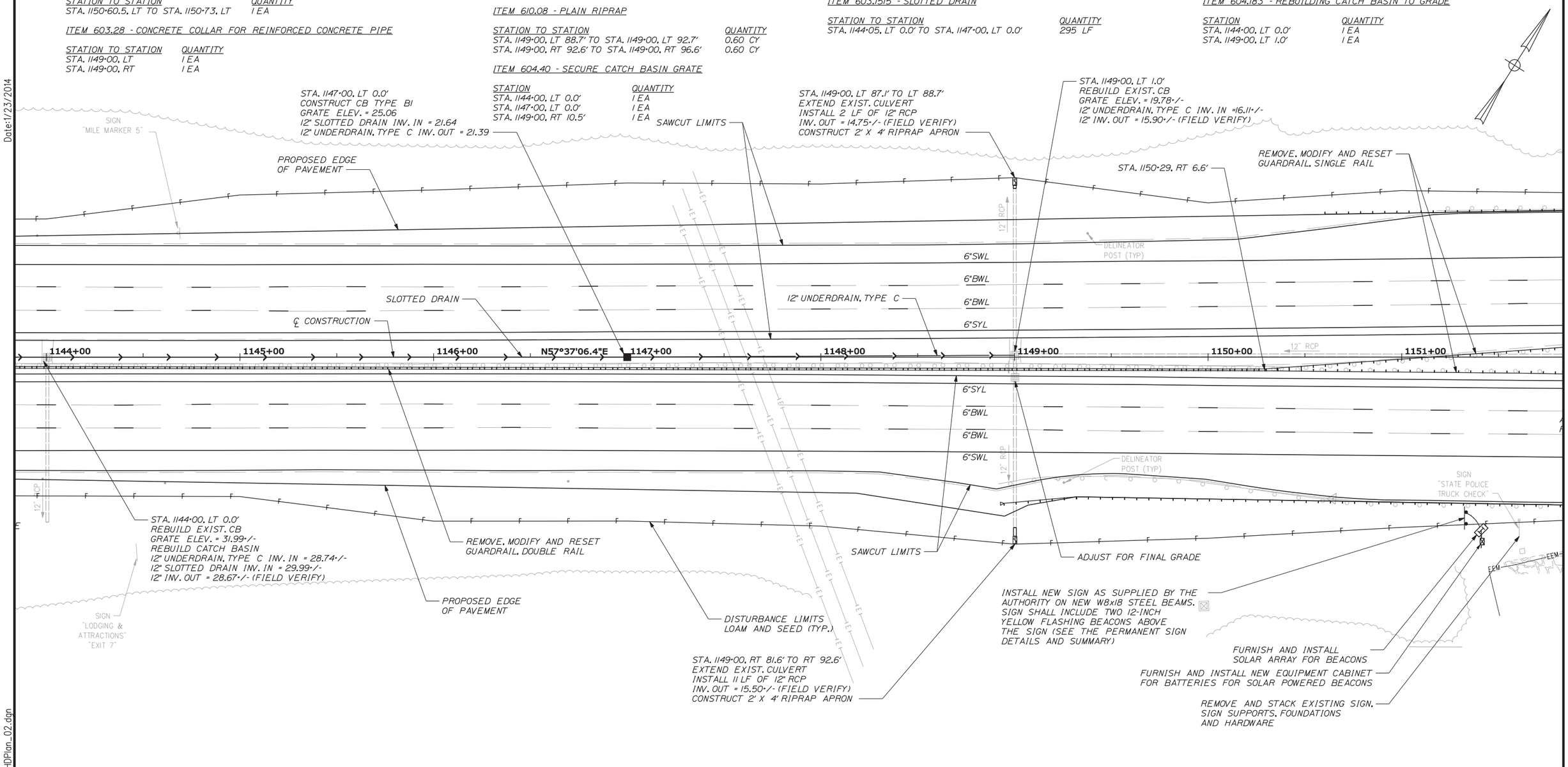

Date:1/23/2014

Filename: ...\te\planset\011_HDPlan_02.dgn

Scale: 25 0 25 50

No.	Revision	By	Date

Designed by:

VHB Vanasse Hangen Brustlin, Inc.

CONSULTANT PROJECT MANAGER: T. BRYANT

	By	Date		By	Date
Designed	PAC	1/14	Checked	TSB	1/14
Drawn	KDP	1/14	In Charge of	TSB	1/14

VANASSE HANGEN BRUSTLIN, INC.
500 Southborough Dr.
Suite 105B
South Portland, ME 04106
TEL (207) 889-3150
FAX (207) 253-5596

MAINE TURNPIKE

THE GOLD STAR MEMORIAL HIGHWAY

MTA PROJECT MANAGER: Ralph C. Norwood IV, P.E.

BRIDGE REHABILITATION
YORK RIVER BRIDGES

ROADWAY PLANS
(2 OF 5)

SHEET NUMBER:

CONTRACT: 2014.05

ITEM 604.181 - ADJUSTING MANHOLE OR CATCH BASIN TO GRADE

STATION	QUANTITY
STA. 1152+25, LT 10.1'	1 EA
STA. 1152+25, LT 0.9'	1 EA
STA. 1152+25, RT 10.2'	1 EA

ITEM 610.08 - PLAIN RIPRAP

STATION TO STATION	QUANTITY
STA. 1152+25, LT 95.8' TO STA. 1152+25, LT 99.8'	0.60 CY

ITEM 604.40 - SECURE CATCH BASIN GRATE

STATION	QUANTITY
STA. 1152+25, RT 10.2'	1 EA

ITEM 419.3 - SAWING BITUMINOUS PAVEMENT

STATION TO STATION	QUANTITY
STA. 1152+00, LT TO STA. 1152+00, RT	25 LF

ITEM 606.1723 - BRIDGE TRANSITION - TYPE III

STATION	QUANTITY
STA. 1152+32 TO STA. 1152+63, RT 77.0'	1 EA
STA. 1152+61 TO STA. 1152+92, RT 11.0'	1 EA
STA. 1159+08 TO STA. 1159+39, LT 11.0'	1 EA
STA. 1159+37 TO STA. 1159+68, LT 77.0'	1 EA

ITEM 606.1721 - BRIDGE TRANSITION TYPE I

STATION	QUANTITY
STA. 1152+83 TO STA. 1153+01, LT 11.0'	1 EA
STA. 1153+11 TO STA. 1153+29, LT 77.0'	1 EA
STA. 1158+71 TO STA. 1158+89, RT 77.0'	1 EA
STA. 1159+00 TO STA. 1159+18, RT 11.0'	1 EA

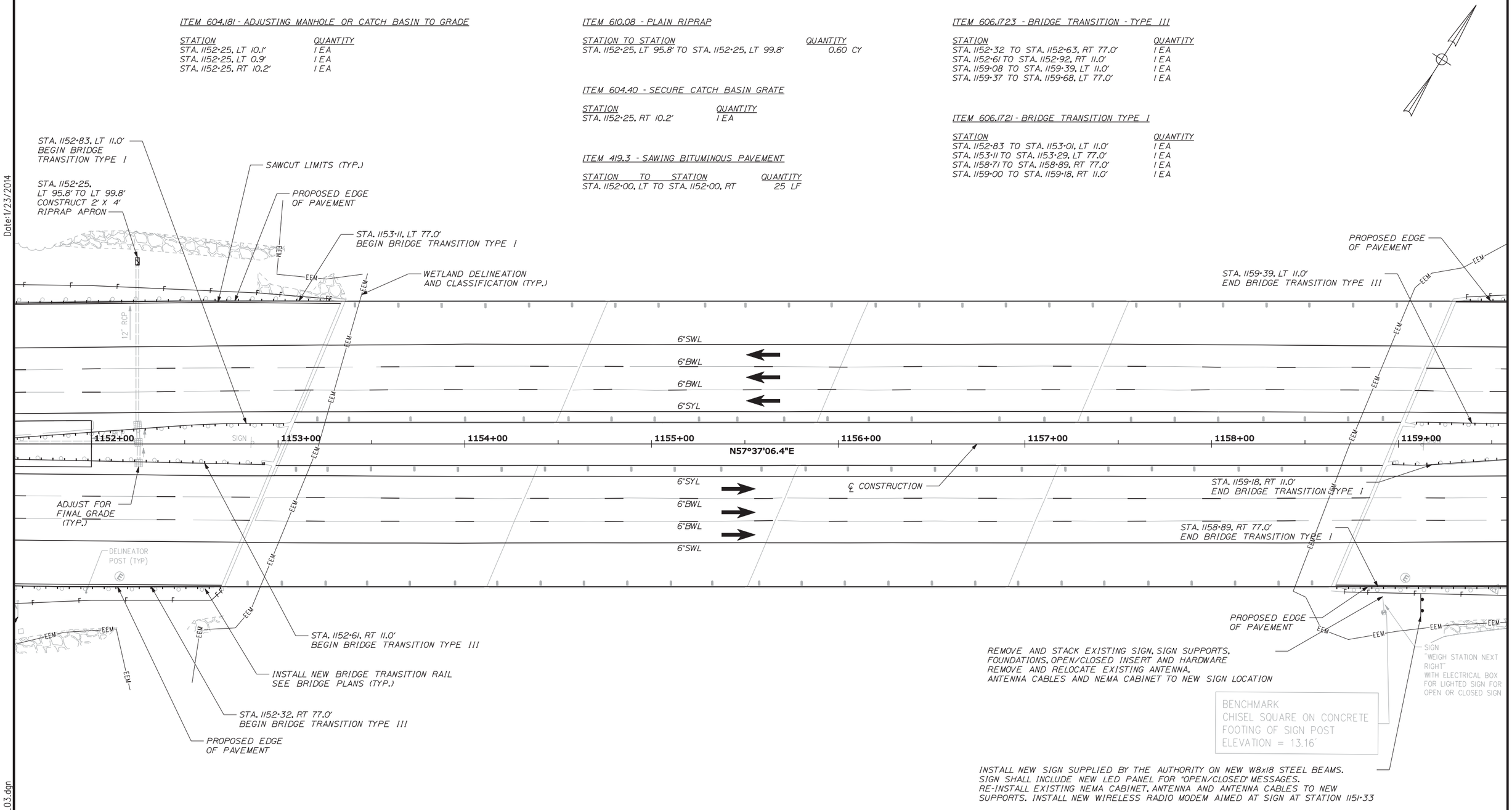

Date:1/23/2014

Filename: ...\te\planset\012_HDPlan_03.dgn

Scale: 25 0 25 50

No.	Revision	By	Date

Designed by:

VHB Vanasse Hangen Brustlin, Inc.

CONSULTANT PROJECT MANAGER: T. BRYANT

	By	Date		By	Date
Designed	PAC	1/14	Checked	TSB	1/14
Drawn	KDP	1/14	In Charge of	TSB	1/14

VANASSE HANGEN BRUSTLIN, INC.
500 Southborough Dr.
Suite 105B
South Portland, ME 04106
TEL (207) 889-3150
FAX (207) 253-5596

MAINE TURNPIKE

THE GOLD STAR MEMORIAL HIGHWAY

MTA PROJECT MANAGER: Ralph C. Norwood IV, P.E.

BRIDGE REHABILITATION
YORK RIVER BRIDGES

ROADWAY PLANS
(3 OF 5)

SHEET NUMBER:

CONTRACT: 2014.05

Date:1/23/2014

ITEM 606.3606 - GUARDRAIL - REMOVE, MODIFY AND RESET, DOUBLE RAIL

STATION TO STATION	QUANTITY
STA. 1161+75, LT TO STA. 1172+00, LT	1025 LF

ITEM 606.3605 - GUARDRAIL - REMOVE, MODIFY AND RESET, SINGLE RAIL

STATION TO STATION	QUANTITY
STA. 1158+89, RT TO STA. 1162+39.5, RT	351 LF
STA. 1159+18, RT TO STA. 1161+75, LT	257 LF
STA. 1159+39, LT TO STA. 1161+75, LT	236 LF
STA. 1159+68, LT TO STA. 1165+18, LT	550 LF

ITEM 606.24 - GUARDRAIL TYPE 3D - SINGLE RAIL

STATION TO STATION	QUANTITY
STA. 1162+39.5, RT TO STA. 1163+77, RT	137.5 LF

ITEM 606.277 - TERMINAL END - TRAILING END

STATION TO STATION	QUANTITY
STA. 1163+77, RT TO STA. 1163+89.5, RT	1 EA

ITEM 605.11 - 12 INCH UNDERDRAIN TYPE C

STATION TO STATION	QUANTITY
STA. 1161+00, RT 1.0' TO STA. 1164+00, LT 0.0'	296 LF
STA. 1165+00, RT 0.3' TO STA. 1168+00, LT 0.0'	296 LF

ITEM 604.183 - REBUILDING CATCH BASIN TO GRADE

STATION	QUANTITY
STA. 1161+00, LT 0.0'	1 EA
STA. 1165+00, LT 0.0'	1 EA

ITEM 419.3 - SAWING BITUMINOUS PAVEMENT

STATION TO STATION	QUANTITY
STA. 1159+31, LT TO STA. 1170+55, LT	1127 LF
STA. 1161+00, LT TO STA. 1171+00, LT	1000 LF
STA. 1161+00, RT TO STA. 1171+00, RT	1000 LF
STA. 1159+67, RT TO STA. 1164+41, RT	586 LF
STA. 1161+00, LT TO STA.1161+00, RT	23 LF
STA. 1171+00, LT TO STA. 1171+00, RT	18 LF

ITEM 606.8 - GUARDRAIL 350 FLEAT TERMINAL

STATION TO STATION	QUANTITY
STA. 1165+18, LT TO STA. 1165+55.5, LT	1 EA

ITEM 604.181 - ADJUSTING MANHOLE OR CATCH BASIN TO GRADE

STATION	QUANTITY
STA. 1161+00, LT 8.6'	1 EA
STA. 1161+00, RT 10.5'	1 EA

ITEM 604.09 - CATCH BASIN TYPE B1

STATION	QUANTITY
STA. 1164+00, LT 0.0'	1 EA

ITEM 603.1515 - SLOTTED DRAIN

STATION TO STATION	QUANTITY
STA. 1164+00, LT 0.0' TO STA. 1164+95, LT 0.0'	95 LF
STA. 1165+05, LT 0.0' TO STA. 1168+00, LT 0.0'	295 LF

ITEM 604.40 - SECURE CATCH BASIN GRATE

STATION	QUANTITY
STA. 1161+00, LT 8.6'	1 EA
STA. 1161+00, RT 10.5'	1 EA
STA. 1165+00, LT 0.0'	1 EA

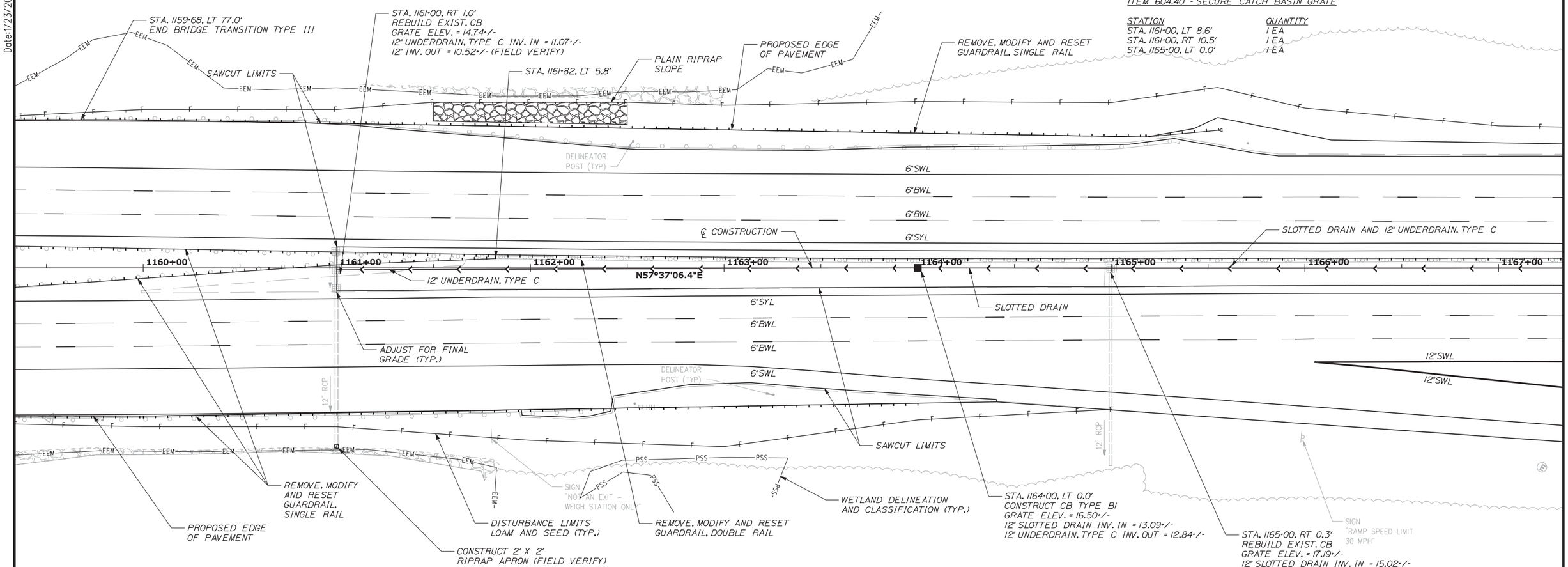

ITEM 610.08 - PLAIN RIPRAP

STATION TO STATION	QUANTITY
STA. 1161+00, RT 91.1' TO STA. 1161+00, RT 93.1'	0.30 CY
STA. 1161+50, LT 75.8' TO STA. 1162+50, LT 74.1'	137.78 CY

Filename: ...\te\planset\013_HDPlan_04.dgn

Scale: 25 0 25 50

No.	Revision	By	Date

Designed by:

VHB Vanasse Hangen Brustlin, Inc.

CONSULTANT PROJECT MANAGER: T. BRYANT

	By	Date		By	Date
Designed	PAC	1/14	Checked	TSB	1/14
Drawn	KDP	1/14	In Charge of	TSB	1/14

VANASSE HANGEN BRUSTLIN, INC.
500 Southborough Dr.
Suite 105B
South Portland, ME 04106
TEL (207) 889-3150
FAX (207) 253-5596

MAINE TURNPIKE

THE GOLD STAR MEMORIAL HIGHWAY

MTA PROJECT MANAGER: Ralph C. Norwood IV, P.E.

BRIDGE REHABILITATION
YORK RIVER BRIDGES

ROADWAY PLANS
(4 OF 5)

SHEET NUMBER:

CONTRACT: 2014.05

ITEM 604.181 - ADJUSTING MANHOLE OR CATCH BASIN TO GRADE

STATION	QUANTITY
STA. 1169+00, RT 67.8'	1 EA
STA. 1171+00, LT 0.0'	1 EA

ITEM 604.40 - SECURE CATCH BASIN GRATE

STATION	QUANTITY
STA. 1168+00, LT 10.0'	1 EA

ITEM 604.09 - CATCH BASIN TYPE BI

STATION	QUANTITY
STA. 1168+00, LT 10.0'	1 EA

ITEM 603.1515 - SLOTTED DRAIN

STATION TO STATION	QUANTITY
STA. 1168+00, LT 0.0' TO STA. 1170+95, LT 0.0'	295 LF

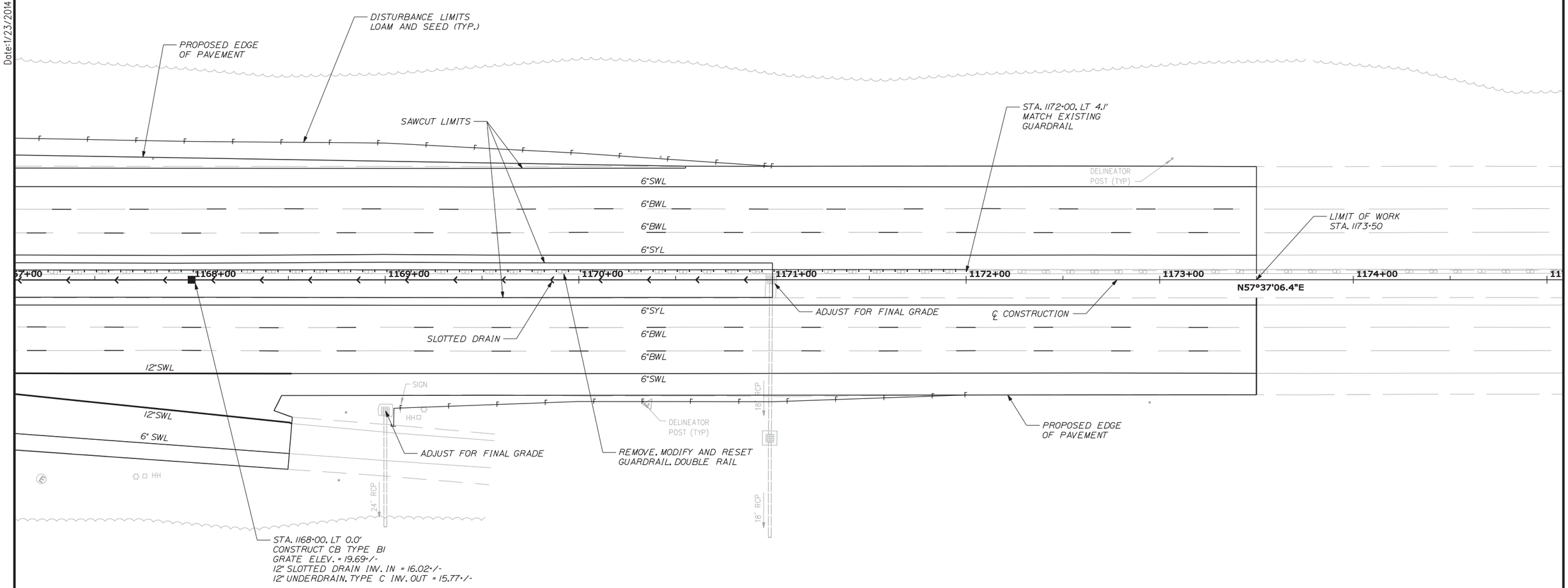

Date: 1/23/2014

Filename: ...\te\planset\014_HDPlan_05.dgn

Scale: 25 0 25 50

No.	Revision	By	Date

Designed by:

VHB Vanasse Hangen Brustlin, Inc.

CONSULTANT PROJECT MANAGER: T. BRYANT

	By	Date		By	Date
Designed	PAC	1/14	Checked	TSB	1/14
Drawn	KDP	1/14	In Charge of	TSB	1/14

VANASSE HANGEN BRUSTLIN, INC.
500 Southborough Dr.
Suite 105B
South Portland, ME 04106
TEL (207) 889-3150
FAX (207) 253-5596

MAINE TURNPIKE

THE GOLD STAR MEMORIAL HIGHWAY

MTA PROJECT MANAGER: Ralph C. Norwood IV, P.E.

BRIDGE REHABILITATION
YORK RIVER BRIDGES

ROADWAY PLANS
(5 OF 5)

SHEET NUMBER:

CONTRACT: 2014.05

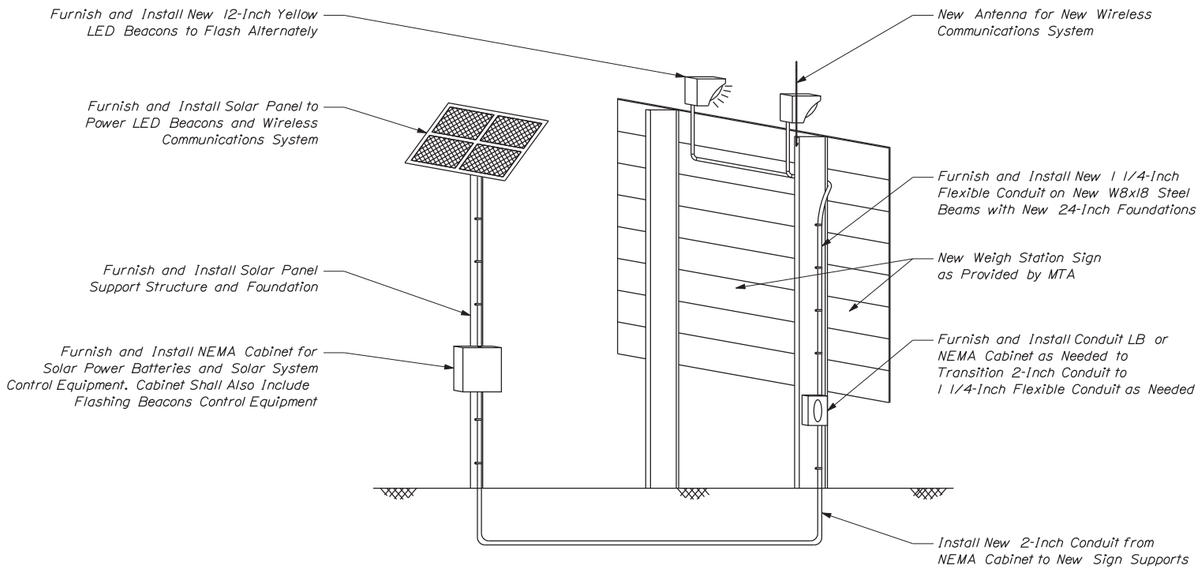

FLASHING BEACON SIGN
Sta. 1151+33, RT 83'

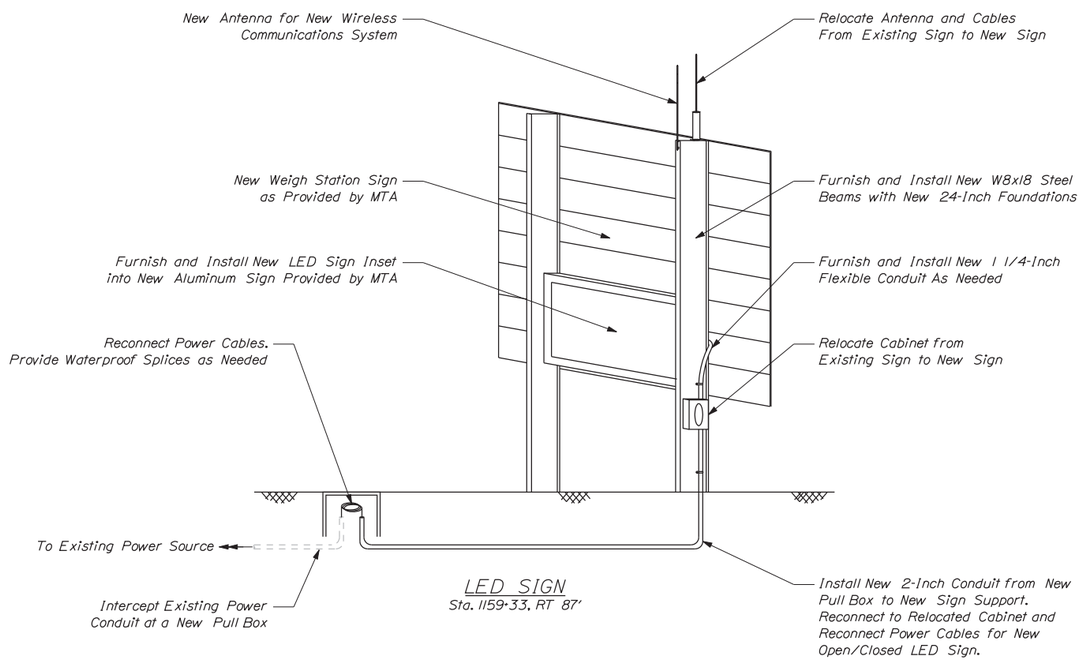

LED SIGN
Sta. 1159+33, RT 87'

PERMANENT SIGN SUMMARY

Sign	Text Dimensions (Inches) Letter Height	Text Dimensions (Inches) Vertical Spacing	Size	Quantity and Color
CHANNEL *	6"	6"	48"x36"	2 - Black on Yellow
MAKE NO WAKE SPEED LIMIT 5 MPH *	3" 3" 10" 3"	3" 3.5" 3"	48"x36"	2 - Black on Yellow
STATE POLICE TRUCK - BUS CHECK ALL TRUCKS - BUSSES MUST EXIT WHEN FLASHING **	8" 8" 8" 8" 8"	6" 10" 6" 6"	144"x84"	1 - White on Green with Flashing Beacons
WEIGH STATION NEXT RIGHT **	10" 10" 10"	7" 7" 10"	108"x96"	1 - White on Green with Inset LED Sign

* - Item 645.12 Overhead Guide Sign (Channel Marker Sign) (EA)
** - Item 655.301 Weigh Station Warning Signal (LS)

NOTES:

1. All permanent signs will be provided by MTA and installed by the Contractor. The Contractor shall be responsible for furnishing and installing all mounting hardware, supports, foundations and electrical connections to install the MTA-supplied permanent signs.
2. Erect Channel Marker signs on concrete deck fascia in same location as existing. Sign attachment hardware shall be stainless steel drilled and anchored. Contractor shall submit details of proposed attachment method to Resident for approval. All costs related to the removal of the existing and erection of the channel marker signs shall be paid under Item 645.12.
3. The new flashing beacon sign shall be installed, powered, tested and operational prior to the removal of the existing bridge-mounted conduit that supplies power to the existing flashing beacon sign.

Date:1/23/2014

Filename: ...\cad\st\planset\015_Sign_dt.dgn

Scale: Not to Scale

No.	Revision	By	Date

Designed by:

Vanasse Hangen Brustlin, Inc.

CONSULTANT PROJECT MANAGER: T. BRYANT

	By	Date		By	Date
Designed	MDS	1/14	Checked	PAC	1/14
Drawn	JAR	1/14	In Charge of	TSB	1/14

VANASSE HANGEN BRUSTLIN, INC.
500 Southborough Dr.
Suite 105B
South Portland, ME 04106
TEL (207) 889-3150
FAX (207) 253-5596

MAINE TURNPIKE

THE GOLD STAR MEMORIAL HIGHWAY

MTA PROJECT MANAGER: Ralph C. Norwood IV, P.E.

BRIDGE REHABILITATION
YORK RIVER BRIDGES

PERMANENT SIGN DETAILS & SUMMARY

SHEET NUMBER:

CONTRACT: 2014.05

MAINTENANCE OF TRAFFIC GENERAL NOTES

1. There are eight phases of traffic control proposed for this project:
   a. York River Bridge Phases 1-6 (see MOT plans)
   b. Cutts Road Bridge Northbound
   c. Cutts Road Bridge Southbound

   The traffic control for the York River Bridges shall consist of median cross-overs to maintain three lanes of through traffic along both the northbound and southbound roadways from May 23, 2014 to November 1, 2014 and for May 22, 2015 to project completion. These median cross-overs shall be installed in accordance with the Maintenance of Traffic plans that follow and the additional Maintenance of Traffic notes below. In addition to these median crossovers, there are proposed widening to the NB and SB roadways. The temporary traffic control for the Cutts Road Bridge repairs shall consist of nighttime double lane closures in general conformance to the 2009 edition of the Manual on Uniform Traffic Control Devices (MUTCD), Typical Application 37 (Figure 6H-37), as amended by the Contract Documents. See the Maintenance of Traffic Notes and Details Sheet for Cutts Road Maintenance of Traffic.

2. All traffic control equipment shall conform to the latest edition of the Maine Department of Transportation (MaineDOT) Standard Specifications and applicable traffic control standards and practices of the Maine Turnpike Authority (MTA).

3. All traffic control equipment and devices shall conform to the 2009 edition of the MUTCD, Chapter 6. All traffic control signs, sign support structures, channelizing devices, flashing arrow panels, portable changeable message signs, and other traffic control equipment along the roadside shall meet or exceed NCHRP 350 Test Level 3 (TL-3) requirements.

4. All traffic control signs shall have ASTM 4956 Type VII, Type VIII or Type IX super high intensity or prismatic fluorescent retroreflective sheeting and shall be maintained in like-new condition. Placement of signs shall be adjusted to avoid obstructing existing signs and to ensure proper sight lines to the construction signs as determined by the Resident.

5. Any signs, equipment, or devices found to be damaged or unserviceable shall be replaced at the Contractor's expense except for the temporary concrete barrier supplied by the Authority.

6. During night operations, temporary work lighting shall be directed away from approaching lanes of traffic.

7. Uniformed traffic officers (State Troopers only) shall be used for all work that may require stopping through traffic along I-95. Scheduling State Troopers will be at the discretion of the Resident and the MTA.

8. Remove and fill existing rumble strips as directed by the Resident in all areas where maintenance of traffic plan requires traffic to cross or travel along the rumble strips. Payment for removing the rumble strips shall be paid for under Item 202.206, Removing Rumble Strips.

9. All lane closures (temporary and permanent) shall require approval of the Resident a minimum of two work days in advance of the lane closure.

10. See Special Provision 652 for all project travel lane restrictions.

11. Contractor shall provide notice of all changes in traffic patterns, including advanced notice of lane closures, using PCMS at least seven days prior to the implementation of the new temporary traffic control phase.

12. Maximum spacing for channelizing devices (drums) shall be:
    80' on center along tangents
    40' on center along tapers

    Devices may be installed with reduced spacing where directed by the Resident.

MAINTENANCE OF TRAFFIC FOR THE YORK RIVER BRIDGES

1. Median cross-overs and traffic lane shifts are proposed along I-95 northbound and southbound for the York River Bridges. During Phases 2 & 3, the left lane of I-95 northbound shall cross-over the median and use the inside of the I-95 southbound bridge in order to maintain three through lanes for northbound traffic. Similarly, during Phases 5 & 6, the left lane of I-95 southbound shall cross-over the median and use the inside of the I-95 northbound bridge in order to maintain three through lanes for southbound traffic. The cross-overs shall use temporary concrete barrier wall with glare screens to separate opposite direction traffic.

2. Approach ends of temporary concrete barrier shall be placed outside of the highway clear zone (minimum 34 feet from the traveled way) or protected by temporary impact attenuators or with guardrail overlaps as approved by the Resident.

3. The Contractor shall grind all conflicting pavement markings along I-95 northbound and southbound. Contractor shall install temporary pavement markings along the closure taper, along tangent segments and along the temporary concrete barrier as shown in the Maintenance of Traffic Plans. All temporary pavement markings shall be temporary tape, except in Phase 4 when the temporary pavement markings shall be paint for the northbound roadway.

4. Maintenance of Traffic sign supports shall not be embedded in temporary or permanent pavement sections. If a sign is shown in an area of existing pavement, the sign shall be mounted on an easel or other non-invasive support.

5. The Authority will supply the temporary concrete traffic barrier (10-foot sections) and glare screens for the project. MTA will provide the barriers and glare screens at the York Weigh Stations for Contractor pick-up. At the conclusion of the project, Contractor shall return the barriers and glare screens to the Crosby Maintenance Yard at Mile 45.8 Southbound in South Portland. The Contractor shall be responsible for furnishing, installing, relocating and removing all 20-foot concrete barrier sections.

6. The Contractor shall not conduct construction operations along the outside and median sides of the roadway simultaneously.

TEMPORARY LANE & ROADWAY CLOSURES

CONSTRUCTION SIGN SUMMARY

Sign		Text Dimensions (Inches) Letter Height	Text Dimensions (Inches) Vertical Spacing	Size	Quantity and Color
G20-2	END ROAD WORK	Text Dimensions Shall Conform to "Standard Highway Signs" - 2012		48"x24"	4 - Black on Orange
G20-5aP	WORK ZONE			36"x24"	4 - Black on Orange
R2-1(50)	SPEED LIMIT 50			36"x48"	4 - Black on White
R2-6aP	FINES DOUBLE			36"x24"	4 - Black on White
R2-1(65)	SPEED LIMIT 65			36"x48"	4 - Black on White
R2-12	END WORK ZONE SPEED LIMIT			36"x54"	4 - Black on White
R4-9	STAY IN LANE			36"x48"	4 - Black on White
W1-4R				48"x48"	1 - Black on Orange
W1-4bL				48"x48"	2 - Black on Orange
W1-4bR				48"x48"	2 - Black on Orange
W1-4cL				48"x48"	1 - Black on Orange
W1-4cR				48"x48"	2 - Black on Orange
W3-5(50)	SPEED LIMIT 50			48"x48"	4 - Black on Orange
W4-2L				48"x48"	2 - Black on Orange
W4-2R				48"x48"	2 - Black on Orange

TEMPORARY LANE & ROADWAY CLOSURES

CONSTRUCTION SIGN SUMMARY

Sign		Text Dimensions (Inches) Letter Height	Text Dimensions (Inches) Vertical Spacing	Size	Quantity and Color
W4-3L		Text Dimensions Shall Conform to "Standard Highway Signs" - 2012		48"x48"	1 - Black on Orange
W20-1 (1/2)	ROAD WORK ½ MILE			48"x48"	4 - Black on Orange
W20-1(1)	ROAD WORK 1 MILE			48"x48"	2 - Black on Orange
W20-5L	LEFT LANE CLOSED ½ MILE			48"x48"	2 - Black on Orange
W20-5R	RIGHT LANE CLOSED ½ MILE			48"x48"	2 - Black on Orange
W21-5	SHOULDER WORK			48"x48"	2 - Black on Orange
DIAGRAMMATIC SIGN	ALL LANES THRU	10D	76 10 10	132"x96"	4 - Black on Orange
LANE CLOSURE DIAGRAMMATIC SIGN	ALL LANES THRU	10D	76 10 10	132"x96"	4 - Black on Orange

* The Lane Closure Diagrammatic Sign shall be used in place of the Diagrammatic sign anytime the Contractor closes one of the two lanes adjacent to the bridge work.

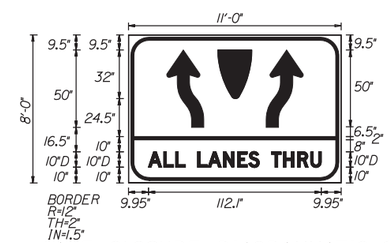

LANE CLOSURE DIAGRAMMATIC SIGN
BLACK ON ORANGE

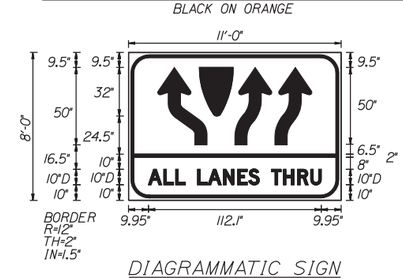

DIAGRAMMATIC SIGN
BLACK ON ORANGE

Date:1/23/2014

Filename: ...\te\planset\016_Details_01.dgn

Scale:

No.	Revision	By	Date

Designed by:

VHB Vanasse Hangen Brustlin, Inc.

CONSULTANT PROJECT MANAGER: T. BRYANT

	By	Date		By	Date
Designed	MDS	1/14	Checked	PAC	1/14
Drawn	JAR	1/14	In Charge of	TSB	1/14

VANASSE HANGEN BRUSTLIN, INC.
500 Southborough Dr.
Suite 105B
South Portland, ME 04106
TEL (207) 889-3150
FAX (207) 253-5596

MAINE TURNPIKE

THE GOLD STAR MEMORIAL HIGHWAY

MTA PROJECT MANAGER: Ralph C. Norwood IV, P.E.

BRIDGE REHABILITATION
YORK RIVER BRIDGES

MAINTENANCE OF TRAFFIC NOTES & DETAILS FOR YORK RIVER BRIDGES

CONTRACT: 2014.05

SHEET NUMBER:
16 OF 103

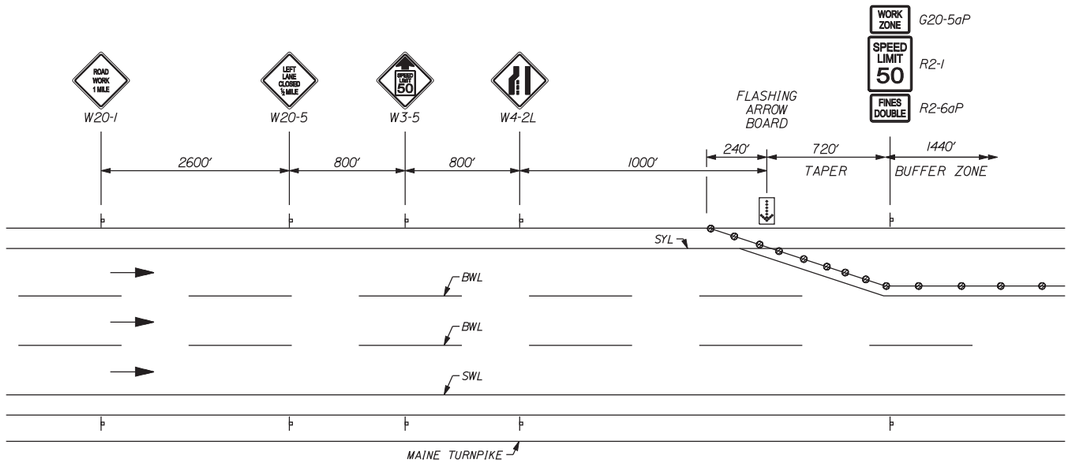

PHASE 1 NB AND 4 SB APPROACH SIGNING
(TYPICAL FOR SHORT TERM SINGLE LANE CLOSURE)

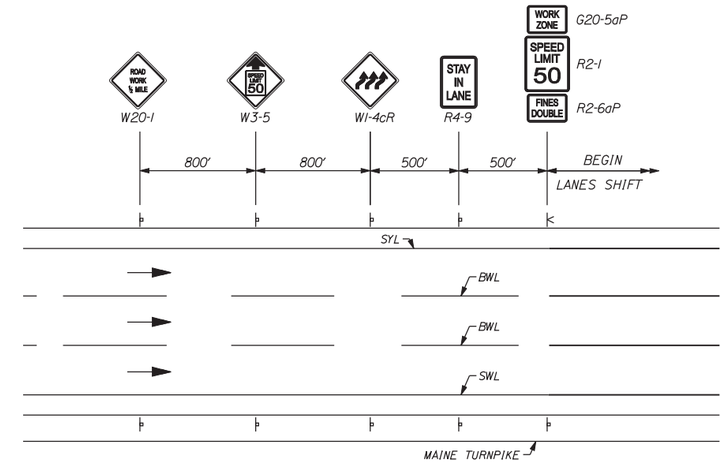

PHASE 1-3 SB AND PHASE 5 & 6 NB APPROACH SIGNING

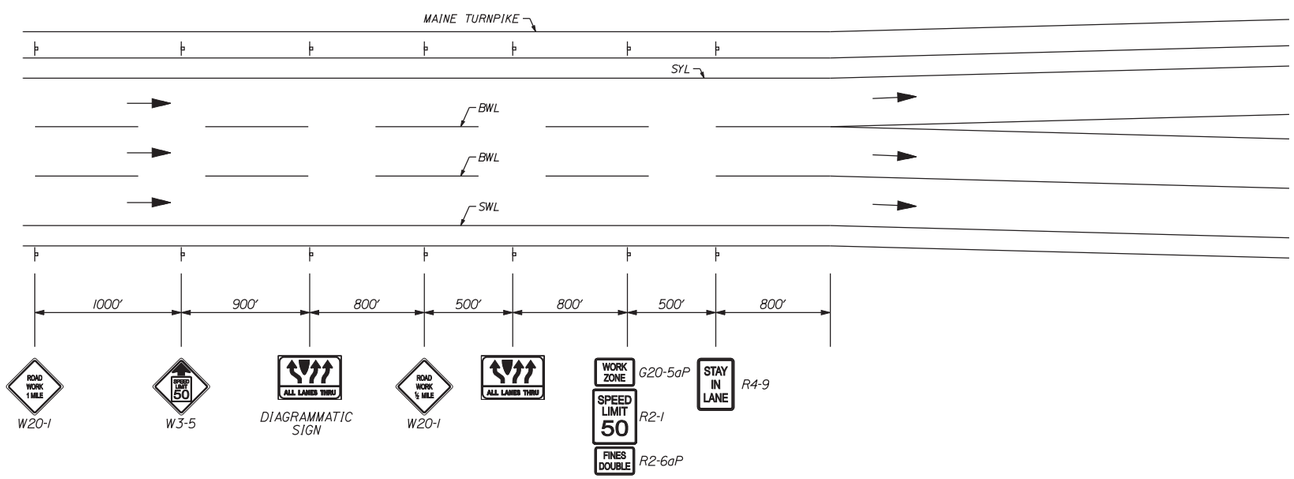

PHASE 2 & 3 NB AND PHASE 5 & 6 SB APPROACH SIGNING

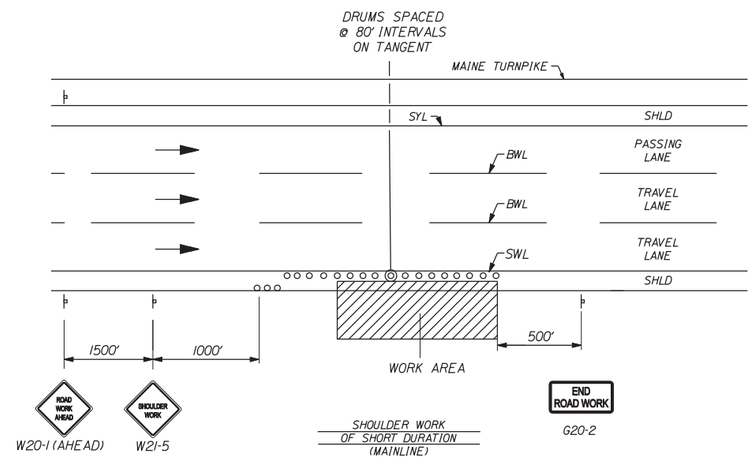

1. THE W20-1 AND G20-2 SIGNS ARE NOT REQUIRED IF THE SHOULDER CLOSURE IS WITHIN A PREVIOUSLY ESTABLISHED WORK ZONE.

SHOULDER WORK

Date:1/23/2014

Filename: ...\te\planset\017_Details_02.dgn

Scale:

No.	Revision	By	Date

Designed by:

VHB Vanasse Hangen Brustlin, Inc.

CONSULTANT PROJECT MANAGER: T. BRYANT

	By	Date		By	Date
Designed	PAC	1/14	Checked	TSB	1/14
Drawn	KDP	1/14	In Charge of	TSB	1/14

VANASSE HANGEN BRUSTLIN, INC.
500 Southborough Dr.
Suite 105B
South Portland, ME 04106
TEL (207) 889-3150
FAX (207) 253-5596

MAINE TURNPIKE

THE GOLD STAR MEMORIAL HIGHWAY

MTA PROJECT MANAGER: Ralph C. Norwood IV, P.E.

BRIDGE REHABILITATION
YORK RIVER BRIDGES

MAINTENANCE OF TRAFFIC NOTES & DETAILS FOR YORK RIVER BRIDGES

CONTRACT: 2014.05

SHEET NUMBER:
17 OF 103

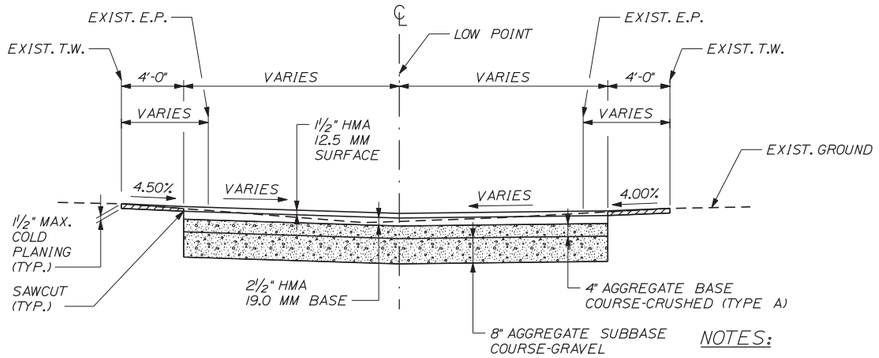

MEDIAN DIVERSION TYPICAL

STA. 1140+00 TO STA. 1152+00
STA. 1161+00 TO STA. 1171+00

NOTES:

1. COAT VERTICAL FACE OF PAVEMENT WITH HOT RUBBERIZED SEALANT WHICH IS INCIDENTAL TO MEDIAN WORK.
2. THE INTENDED SEQUENCE OF CONSTRUCTION IS AS FOLLOWS:
   A. COLD PLANE EXISTING SHOULDER TO PROPOSED CROSS SLOPE AT A DEPTH OF 1½" AT THE EXISTING TW.
   B. SAWCUT BOTH SB AND NB.
   C. INSTALL DRAINAGE.
   D. INSTALL SUBBASE MATERIAL.
   E. PAVE BINDER AND WEARING SURFACE.
3. SEE CROSS SECTIONS FOR DIMENSIONS AND APPROXIMATE CROSS SLOPES.

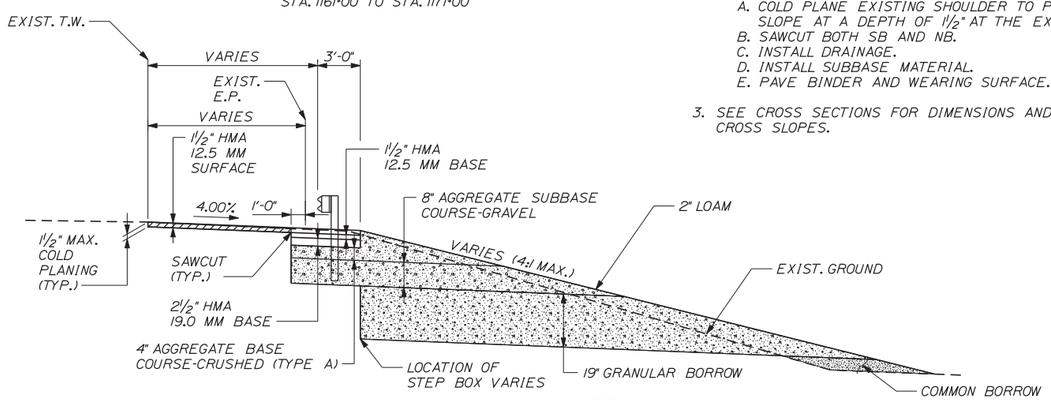

WIDENING DETAIL

STA. 1141+60 TO STA. 1151+17, LT
STA. 1141+94 TO STA. 1150+91, RT
STA. 1161+12 TO STA. 1170+55, LT
STA. 1162+43 TO STA. 1164+45, RT
STA. 1168+43 TO STA. 1169+92, RT

NOTES:

1. SEE CROSS SECTIONS FOR ACTUAL LOCATIONS OF THE AGGREGATE AND GRANULAR BORROW LAYERS.
2. GUARDRAIL LOCATIONS VARY. SEE ROADWAY PLANS FOR ACTUAL LOCATIONS.
3. COAT VERTICAL FACE OF PAVEMENT WITH HOT RUBBERIZED SEALANT WHICH IS INCIDENTAL TO MEDIAN WORK.

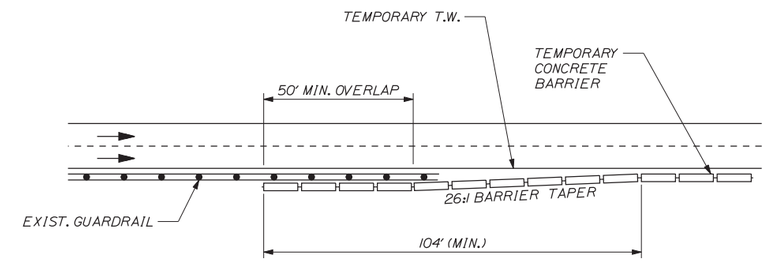

GUARDRAIL / TEMPORARY CONCRETE BARRIER OVERLAP DETAIL

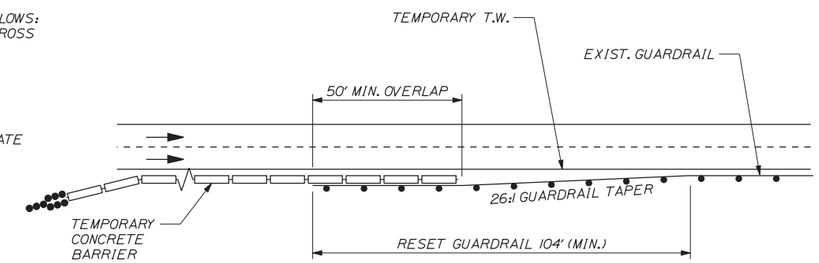

TEMPORARY CONCRETE BARRIER / GUARDRAIL OVERLAP DETAIL

NOTES:

1. TEMPORARY CONCRETE BARRIER ENDS WITHIN THE HIGHWAY CLEAR ZONE SHALL BE PROTECTED BY A TEMPORARY IMPACT ATTENUATOR OR LAPPED BEHIND GUARDRAIL.
2. IF A TEMPORARY WORK ZONE CRASH CUSHION IS USED, THE WORK ZONE CRASH CUSHION SYSTEM MUST BE FOUNDED ON A LEVEL SURFACE. ANY WORK NECESSARY TO PROVIDE A LEVEL SURFACE WILL BE INCIDENTAL TO THE WORK ZONE CRASH CUSHION ITEM.
3. TEMPORARY CONCRETE BARRIER LAYOUT SHALL MEET MUTCD AND AASHTO ROADSIDE DESIGN. CURRENT EDITION LAYOUT AND OFFSET REQUIREMENTS.

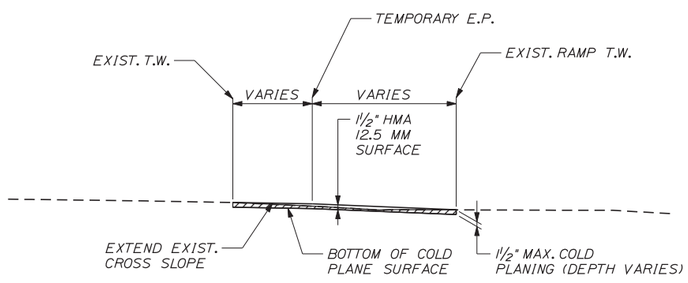

GORE DETAIL

STA. 1166+04 TO STA. 1168+43, RT

NOTE:

1. COLD PLANE THE GORE AREA TO PROVIDE FOR 1½" OF HMA 12.5 MM SURFACE.

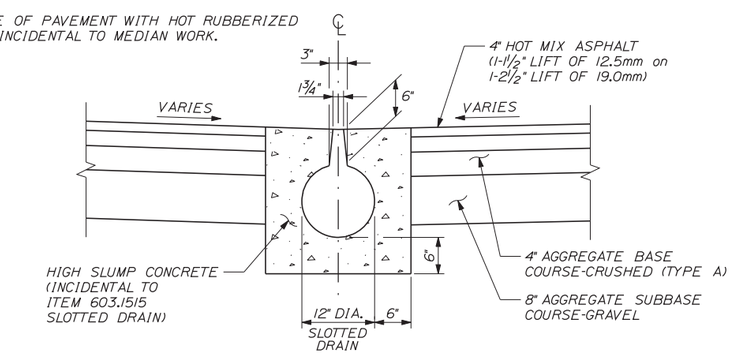

SLOTTED DRAIN

N.T.S.

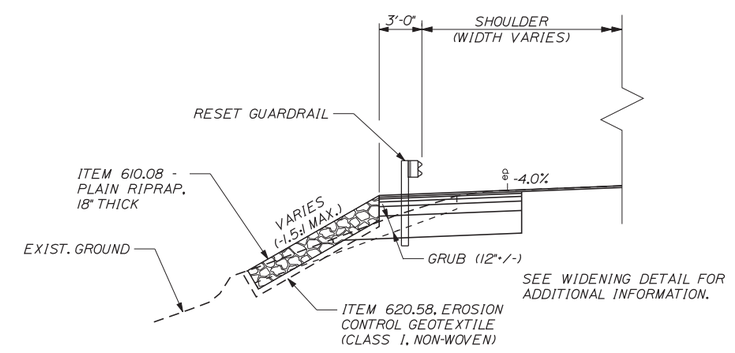

RIPRAP SLOPE DETAIL

STA. 1161+34 TO STA. 1162+34, LT

Date: 1/23/2014

Filename: ...\te\planset\018_Details_03.dgn

Scale:

No.	Revision	By	Date

Designed by:

VHB Vanasse Hangen Brustlin, Inc.

CONSULTANT PROJECT MANAGER: T. BRYANT

	By	Date		By	Date
Designed	PAC	1/14	Checked	TSB	1/14
Drawn	KDP	1/14	In Charge of	TSB	1/14

VANASSE HANGEN BRUSTLIN, INC.
500 Southborough Dr.
Suite 105B
South Portland, ME 04106
TEL (207) 889-3150
FAX (207) 253-5596

MAINE TURNPIKE

THE GOLD STAR MEMORIAL HIGHWAY

MTA PROJECT MANAGER: Ralph C. Norwood IV, P.E.

BRIDGE REHABILITATION
YORK RIVER BRIDGES

MAINTENANCE OF TRAFFIC NOTES & DETAILS FOR YORK RIVER BRIDGES

SHEET NUMBER:

CONTRACT: 2014.05

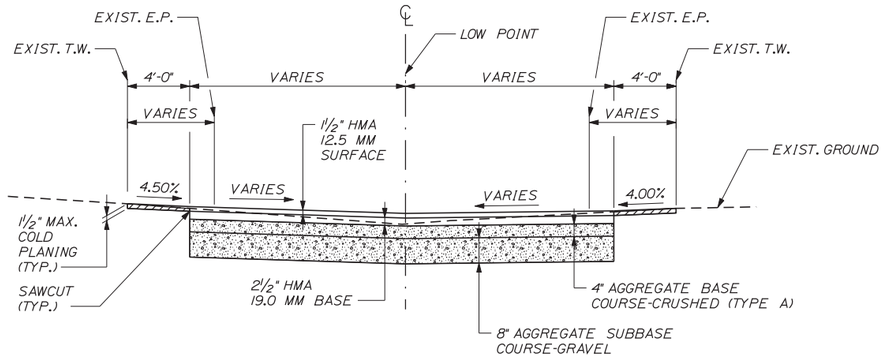

FULL DEPTH MEDIAN WORK

TRANSITION #1 - STA. 1140+00
TRANSITION #2 - STA. 1152+00
TRANSITION #3 - STA. 1161+00
TRANSITION #4 - STA. 1171+00

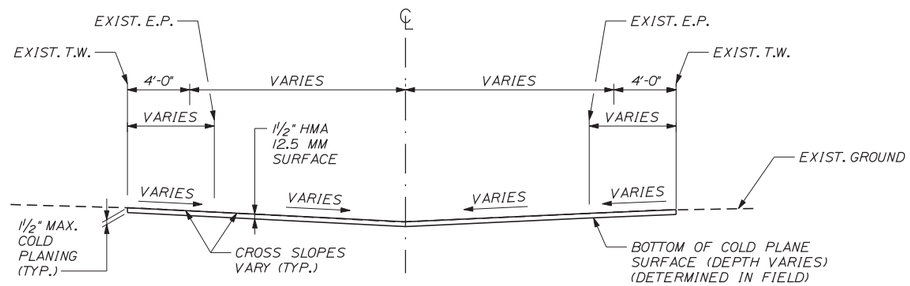

INTERMEDIATE SECTION AT MEDIAN

TRANSITION #1 - STA. 1139+50+/-
TRANSITION #2 - STA. 1152+50+/-
TRANSITION #3 - STA. 1160+50+/-
TRANSITION #4 - STA. 1171+50+/-

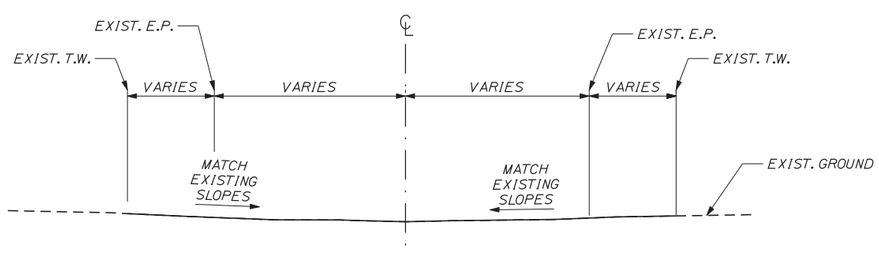

MATCH EXISTING AT MEDIAN

TRANSITION #1 - STA. 1139+00
TRANSITION #2 - BRIDGE
TRANSITION #3 - BRIDGE
TRANSITION #4 - STA. 1172+00

NOTE:

1. THE CONTRACTOR SHALL COLD PLANE AND PAVE A TRANSITION THAT MATCHES THE EXISTING CONDITIONS AT ONE END AND THE PROPOSED CROSS SECTION WORK AT THE OTHER END.

MEDIAN PAVEMENT TRANSITION DETAIL

NOT TO SCALE

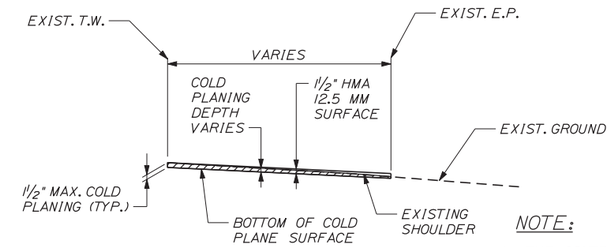

NOTE:

1. THE CONTRACTOR SHALL COLD PLANE AND PAVE A TRANSITION THAT MATCHES THE EXISTING CONDITION TO THE PROPOSED CONDITION OVER 50 FEET.

OUTSIDE SHOULDER PAVEMENT TRANSITION DETAIL

NOT TO SCALE

Date:1/23/2014

Filename: ...\te\planset\019_Details_04.dgn

Scale:

No.	Revision	By	Date

Designed by:

VHB Vanasse Hangen Brustlin, Inc.

CONSULTANT PROJECT MANAGER: T. BRYANT

	By	Date		By	Date
Designed	PAC	1/14	Checked	TSB	1/14
Drawn	KDP	1/14	In Charge of	TSB	1/14

VANASSE HANGEN BRUSTLIN, INC.
500 Southborough Dr.
Suite 105B
South Portland, ME 04106
TEL (207) 889-3150
FAX (207) 253-5596

MAINE TURNPIKE

THE GOLD STAR MEMORIAL HIGHWAY

MTA PROJECT MANAGER: Ralph C. Norwood IV, P.E.

BRIDGE REHABILITATION
YORK RIVER BRIDGES

MAINTENANCE OF TRAFFIC NOTES & DETAILS FOR YORK RIVER BRIDGES

SHEET NUMBER:

CONTRACT: 2014.05

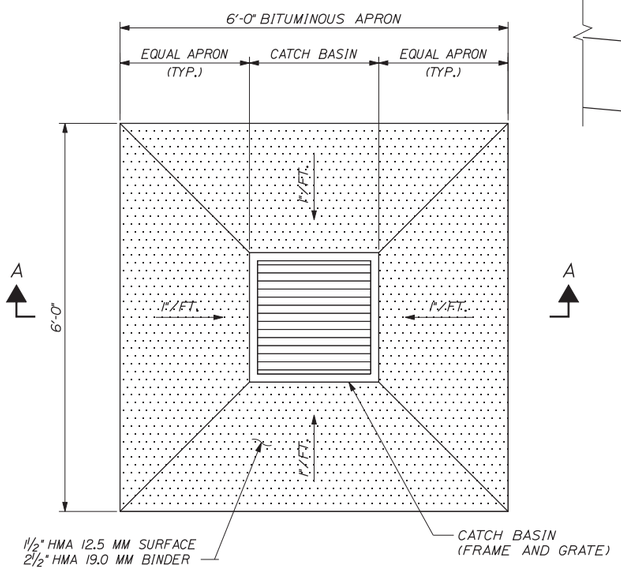

PLAN VIEW

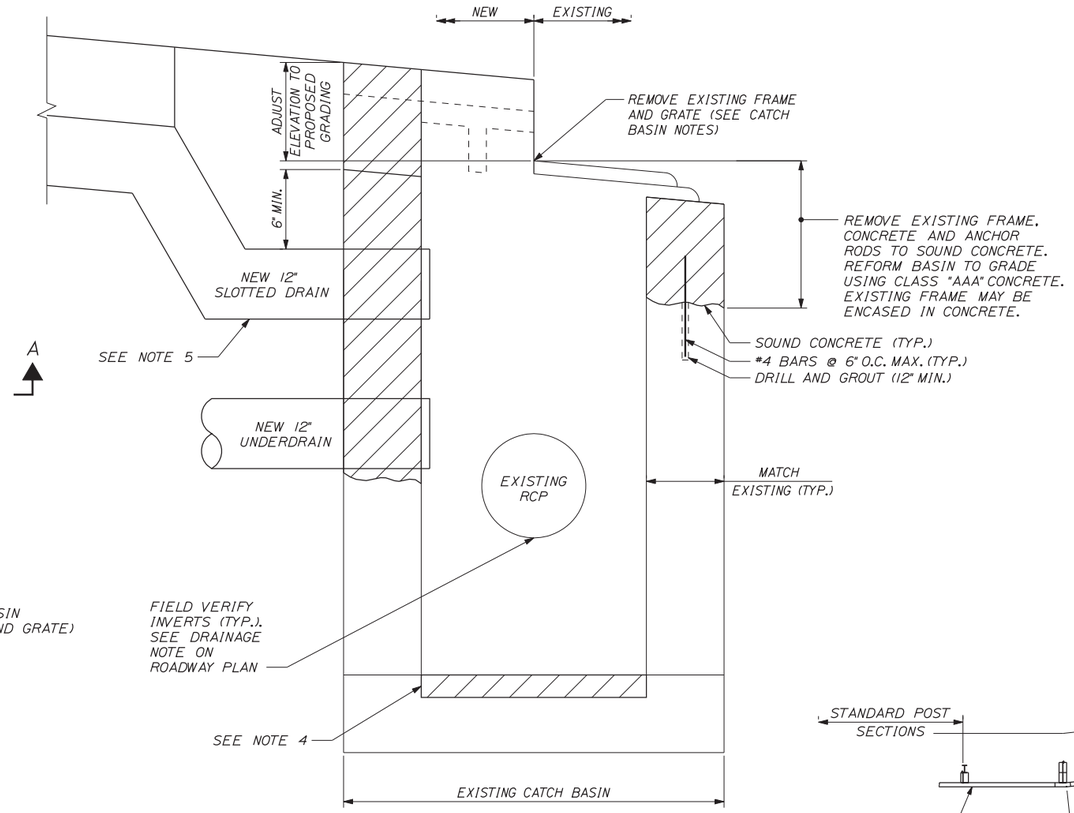

REBUILDING CATCH BASIN
NOT TO SCALE

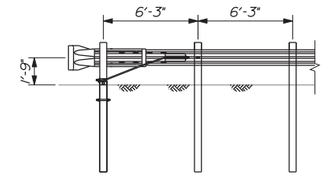

TERMINAL END - TRAILING END
NOT TO SCALE

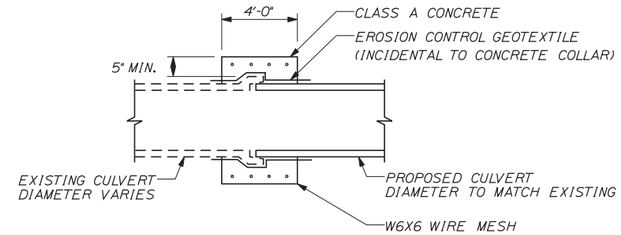

CONCRETE COLLAR FOR REINFORCED CONCRETE PIPES

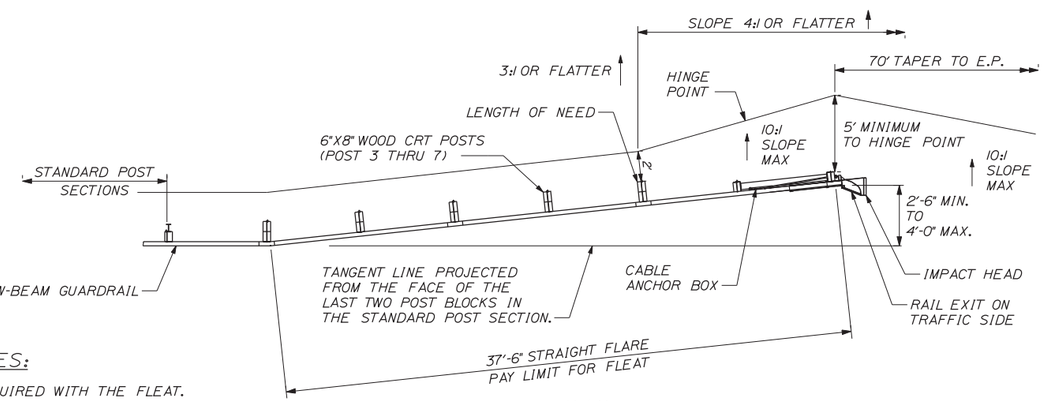

PLAN

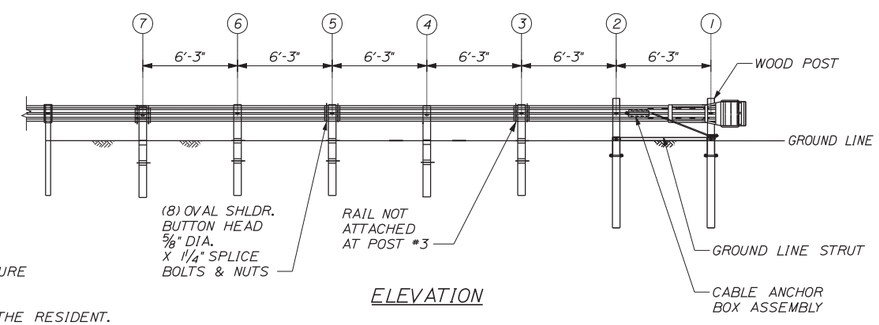

ELEVATION

GUARDRAIL 350 FLEAT TERMINAL
NOT TO SCALE

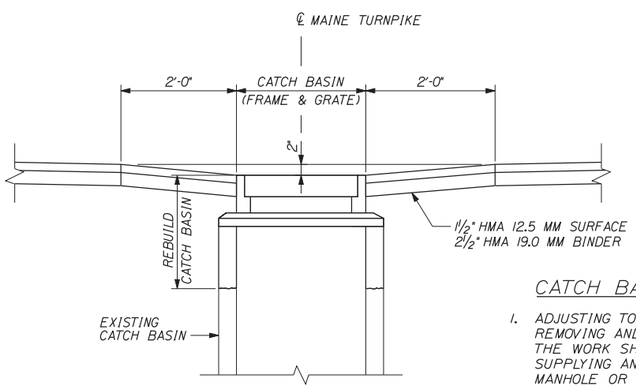

SECTION A-A

ADJUSTING OR REBUILDING MEDIAN CATCH BASIN
NOT TO SCALE

GUARDRAIL NOTES:

1. WOOD POSTS ARE REQUIRED WITH THE FLEAT.
2. SEE SPECIFICATIONS FOR REFLECTIVE SHEETING REQUIREMENTS.

CATCH BASIN NOTES:

1. ADJUSTING TO GRADE FOR THE EXISTING CATCH BASINS IDENTIFIED ON THE ROADWAY PLANS SHALL INCLUDE REMOVING AND DISCARDING THE FRAMES AND GRATES. AND ANY UNSOUND CONCRETE (2" MIN.) AND ANCHOR RODS. THE WORK SHALL ALSO INCLUDE REFORMING THE CATCH BASIN TO THE PROPOSED GRADE WITH CONCRETE. AND SUPPLYING AND INSTALLING NEW FRAMES AND GRATES. THIS WORK SHALL BE PAID AS ITEM 604.181. ADJUSTING MANHOLE OR CATCH BASIN TO GRADE.
2. REBUILDING TO GRADE FOR THE EXISTING CATCH BASINS NOTED ON THE ROADWAY PLANS SHALL INCLUDE REMOVING AND DISCARDING THE FRAMES AND GRATES. CONE SECTION. AND BARREL SECTION TO THE LIMITS SHOWN. AND ANY UNSOUND CONCRETE (2" MIN.) AND ANCHOR RODS. THE WORK SHALL ALSO INCLUDE REFORMING THE CATCH BASIN TO THE PROPOSED GRADE WITH CONCRETE AND REINFORCING STEEL DOWELS. AND SUPPLYING AND INSTALLING NEW FRAMES AND GRATES. THIS WORK SHALL BE PAID AS ITEM 604.183 REBUILD CATCH BASIN TO GRADE.
3. AS NOTED ON THE ROADWAY PLANS. THE GRATES OF ALL CATCH BASINS THAT WILL CARRY TRAFFIC DURING MAINTENANCE OF TRAFFIC OPERATIONS SHALL HAVE THEIR GRATES SECURED IN ACCORDANCE WITH SPECIAL PROVISION SECTION 604 MANHOLES. INLETS AND CATCH BASINS (SECURE CATCH BASIN GRATES.) THIS WORK SHALL BE PAID AS ITEM 604.40 SECURE CATCH BASIN GRATE.
4. REMOVE ANY UNSOUND CONCRETE (2" MIN.) IN CATCH BASIN SUMPS AND REPLACE WITH NEW CONCRETE IF DIRECTED BY THE RESIDENT.
5. CONNECT SLOTTED DRAIN TO EXISTING CATCH BASINS IN ACCORDANCE WITH SPECIAL PROVISION SECTION 603 PIPE CULVERTS AND STORM DRAINS (SLOTTED DRAIN).

Date:1/23/2014

Filename: ...\te\planset\020_Details_05.dgn

Scale:

No.	Revision	By	Date

Designed by:

VHB Vanasse Hangen Brustlin, Inc.

CONSULTANT PROJECT MANAGER: T. BRYANT

	By	Date		By	Date
Designed	PAC	1/14	Checked	RSB	1/14
Drawn	CLC	1/14	In Charge of	TSB	1/14

VANASSE HANGEN BRUSTLIN, INC.
500 Southborough Dr.
Suite 105B
South Portland, ME 04106
TEL (207) 889-3150
FAX (207) 253-5596

MAINE TURNPIKE

THE GOLD STAR MEMORIAL HIGHWAY

MTA PROJECT MANAGER: Ralph C. Norwood IV, P.E.

BRIDGE REHABILITATION
YORK RIVER BRIDGES

GUARDRAIL AND CATCH BASIN DETAILS

SHEET NUMBER:

CONTRACT: 2014.05

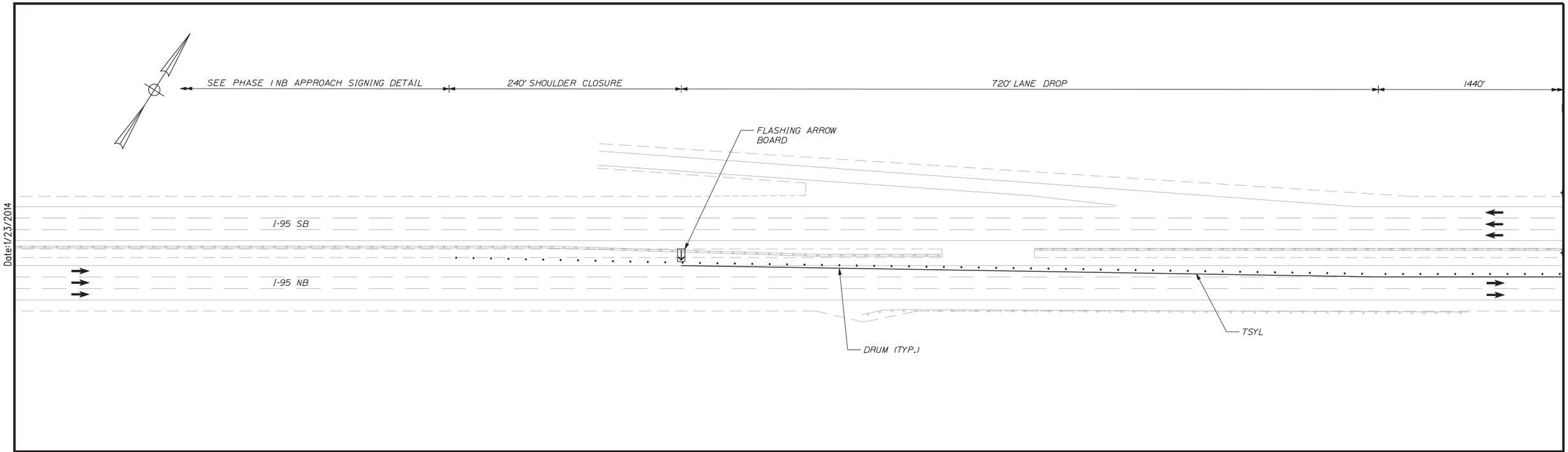

* TEMPORARY SPEED LIMIT SIGN AND END ROAD WORK SIGN SHALL BE INSTALLED FOR PHASE 1, SHALL REMAIN THROUGHOUT CONSTRUCTION AND SHALL BE REMOVED AT PROJECT COMPLETION.

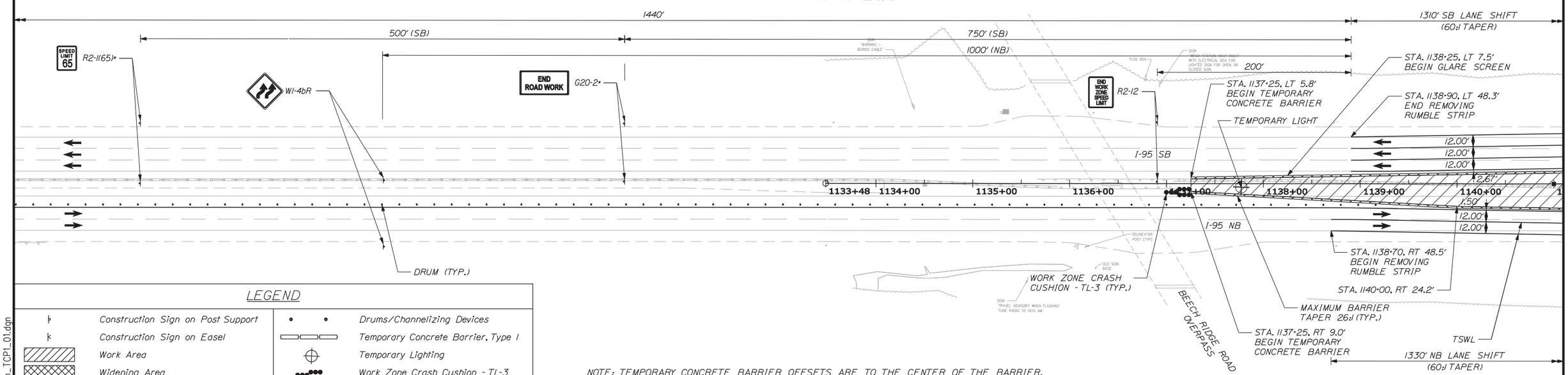

LEGEND

	Construction Sign on Post Support		Drums/Channelizing Devices
	Construction Sign on Easel		Temporary Concrete Barrier, Type I
	Work Area		Temporary Lighting
	Widening Area		Work Zone Crash Cushion - TL-3

NOTE: TEMPORARY CONCRETE BARRIER OFFSETS ARE TO THE CENTER OF THE BARRIER.

Scale: 50 0 50 100

No.	Revision	By	Date

Designed by:

VHB Vanasse Hangen Brustlin, Inc.

CONSULTANT PROJECT MANAGER: T. BRYANT

	By	Date		By	Date
Designed	MDS	1/14	Checked	PAC	1/14
Drawn	JAR	1/14	In Charge of	TSB	1/14

VANASSE HANGEN BRUSTLIN, INC.
500 Southborough Dr.
Suite 105B
South Portland, ME 04106
TEL (207) 889-3150
FAX (207) 253-5596

MAINE TURNPIKE

THE GOLD STAR MEMORIAL HIGHWAY

MTA PROJECT MANAGER: Ralph C. Norwood IV, P.E.

BRIDGE REHABILITATION
YORK RIVER BRIDGES

MAINTENANCE OF TRAFFIC PLANS PHASE 1
(1 OF 14)

SHEET NUMBER:

CONTRACT: 2014.05

Date: 1/23/2014

Filename: ...\planset\021_Plan_TCP1_01.dgn

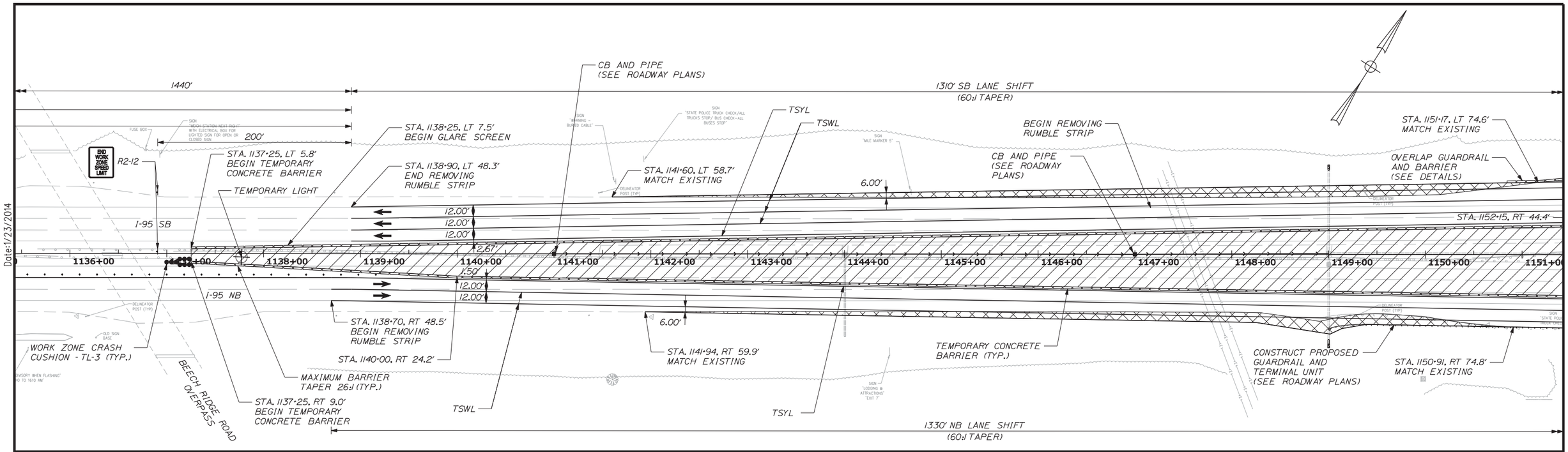

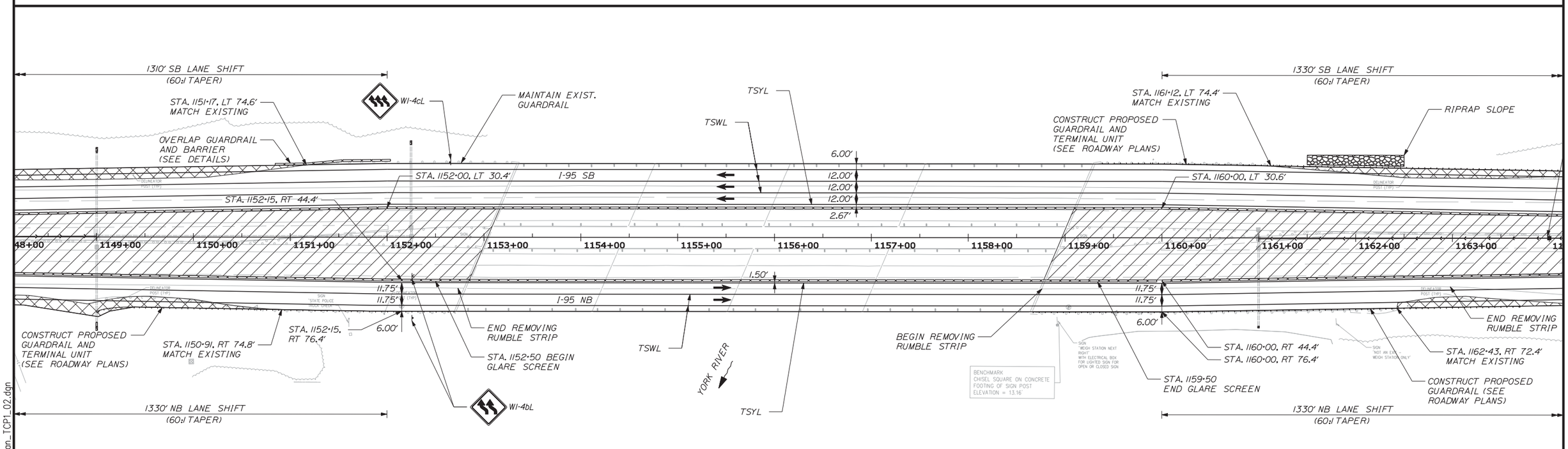

Scale: 50 0 50 100

No.	Revision	By	Date

Designed by:

VHB Vanasse Hangen Brustlin, Inc.

CONSULTANT PROJECT MANAGER: T. BRYANT

	By	Date		By	Date
Designed	MDS	1/14	Checked	PAC	1/14
Drawn	JAR	1/14	In Charge of	TSB	1/14

VANASSE HANGEN BRUSTLIN, INC.
500 Southborough Dr.
Suite 105B
South Portland, ME 04106
TEL (207) 889-3150
FAX (207) 253-5596

MAINE TURNPIKE

THE GOLD STAR MEMORIAL HIGHWAY

MTA PROJECT MANAGER: Ralph C. Norwood IV, P.E.

BRIDGE REHABILITATION
YORK RIVER BRIDGES

MAINTENANCE OF TRAFFIC PLANS PHASE 1
(2 OF 14)

SHEET NUMBER:

CONTRACT: 2014.05

Filename: ...\planset\022_Plan_TCP1_02.dgn

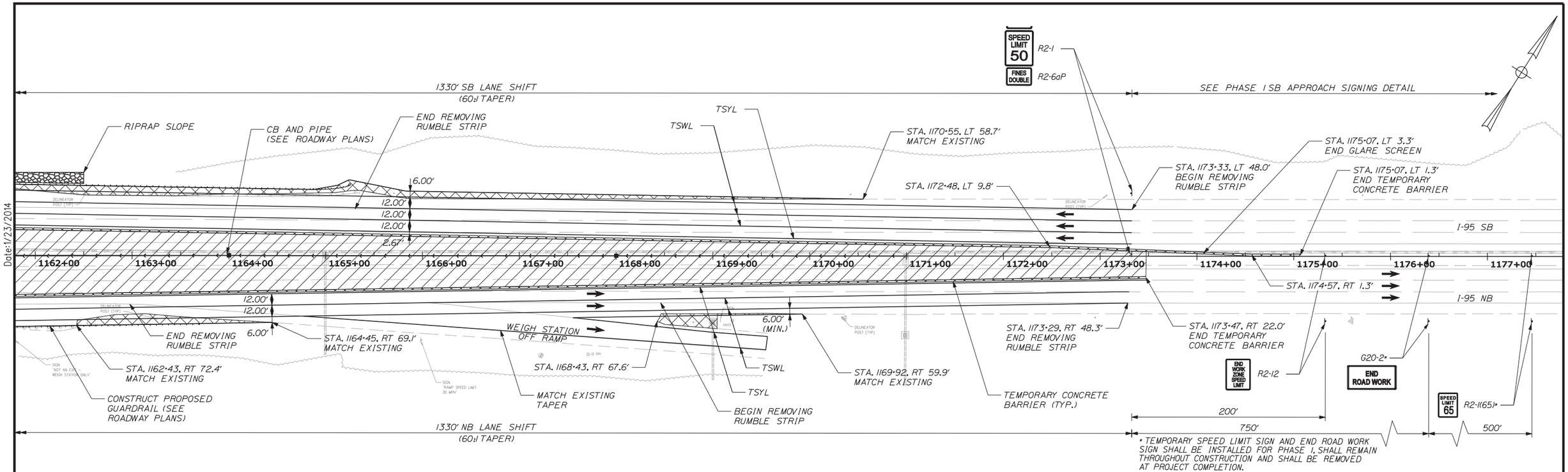

Date:1/23/2014

PHASE 1 SEQUENCING NOTES:

1. REMOVE AND FILL ALL EXISTING RUMBLE STRIPS (LEFT AND RIGHT EDGE LINES) BETWEEN STA. 1138+75 AND STA. 1173+25, NORTHBOUND AND SOUTHBOUND.
2. CONSTRUCT OUTSIDE WIDENINGS.
3. CLOSE LEFT NB LANE AND SHIFT NB AND SB TRAFFIC TO PHASE 1 LAYOUT UTILIZING WIDENINGS.
4. INSTALL PORTABLE CONCRETE BARRIER TO PROTECT WORK ZONE AND BEGIN MEDIAN CONSTRUCTION.

Scale: 50 0 50 100

No.	Revision	By	Date

Designed by:

VHB Vanasse Hangen Brustlin, Inc.

CONSULTANT PROJECT MANAGER: T. BRYANT

	By	Date		By	Date
Designed	MDS	1/14	Checked	PAC	1/14
Drawn	JAR	1/14	In Charge of	TSB	1/14

VANASSE HANGEN BRUSTLIN, INC.
500 Southborough Dr.
Suite 105B
South Portland, ME 04106
TEL (207) 889-3150
FAX (207) 253-5596

MAINE TURNPIKE

THE GOLD STAR MEMORIAL HIGHWAY

MTA PROJECT MANAGER: Ralph C. Norwood IV, P.E.

BRIDGE REHABILITATION
YORK RIVER BRIDGES

MAINTENANCE OF TRAFFIC PLANS PHASE 1
(3 OF 14)

SHEET NUMBER:

CONTRACT: 2014.05

23 OF 103

Filename: ...\planset\023_Plan_TCP1_03.dgn

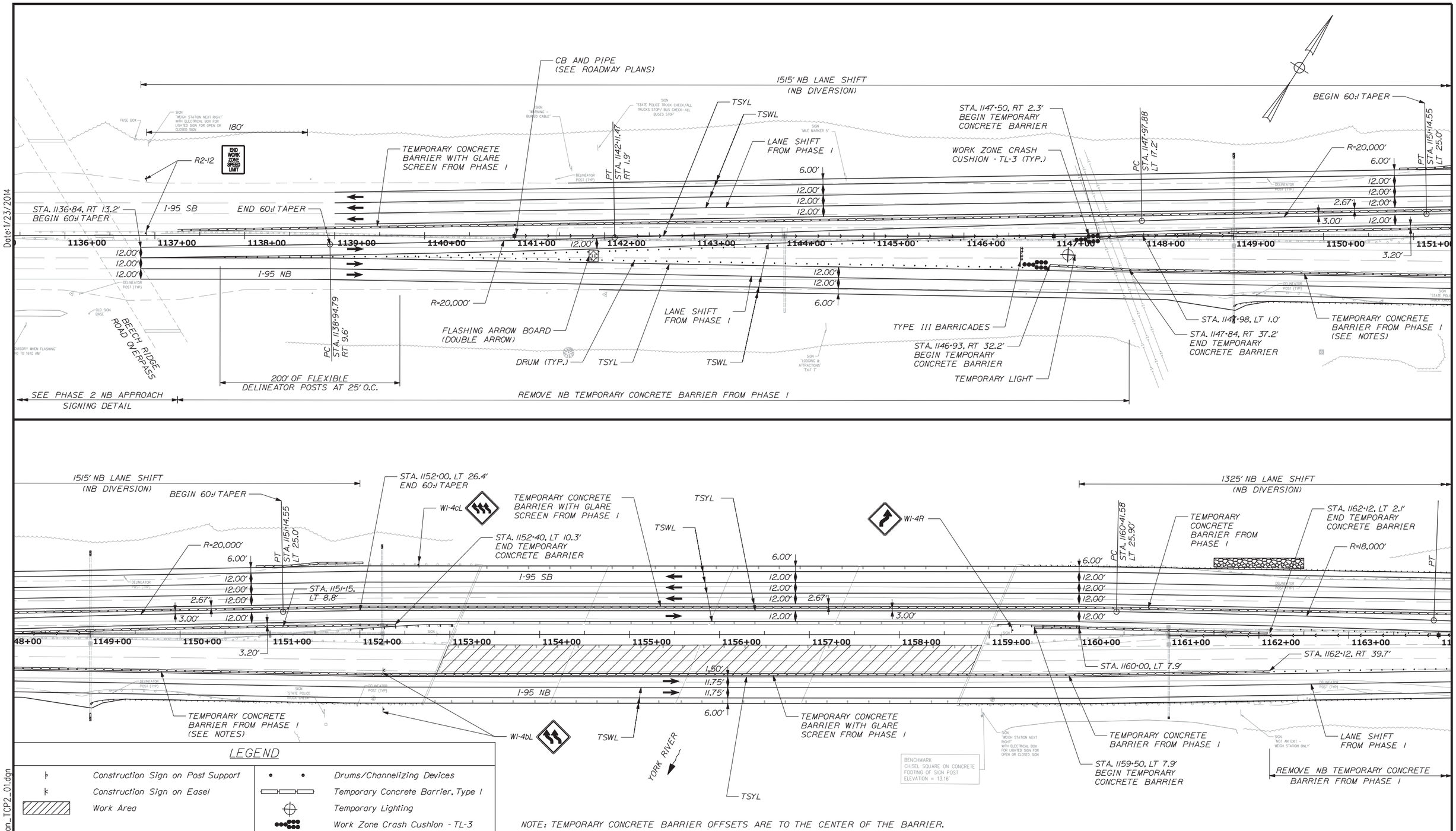

LEGEND

	Construction Sign on Post Support		Drums/Channelizing Devices
	Construction Sign on Easel		Temporary Concrete Barrier, Type 1
	Work Area		Temporary Lighting
			Work Zone Crash Cushion - TL-3

NOTE: TEMPORARY CONCRETE BARRIER OFFSETS ARE TO THE CENTER OF THE BARRIER.

Scale: 50 0 50 100

No.	Revision	By	Date

Designed by:

VHB Vanasse Hangen Brustlin, Inc.

CONSULTANT PROJECT MANAGER: T. BRYANT

	By	Date		By	Date
Designed	MDS	1/14	Checked	PAC	1/14
Drawn	JAR	1/14	In Charge of	TSB	1/14

VANASSE HANGEN BRUSTLIN, INC.
500 Southborough Dr.
Suite 105B
South Portland, ME 04106
TEL (207) 889-3150
FAX (207) 253-5596

MAINE TURNPIKE

THE GOLD STAR MEMORIAL HIGHWAY

MTA PROJECT MANAGER: Ralph C. Norwood IV, P.E.

BRIDGE REHABILITATION
YORK RIVER BRIDGES

MAINTENANCE OF TRAFFIC PLANS PHASE 2
(4 OF 14)

SHEET NUMBER:

CONTRACT: 2014.05

Date: 1/23/2014

Filename: ...\planset\024_Plan_TCP2_01.dgn

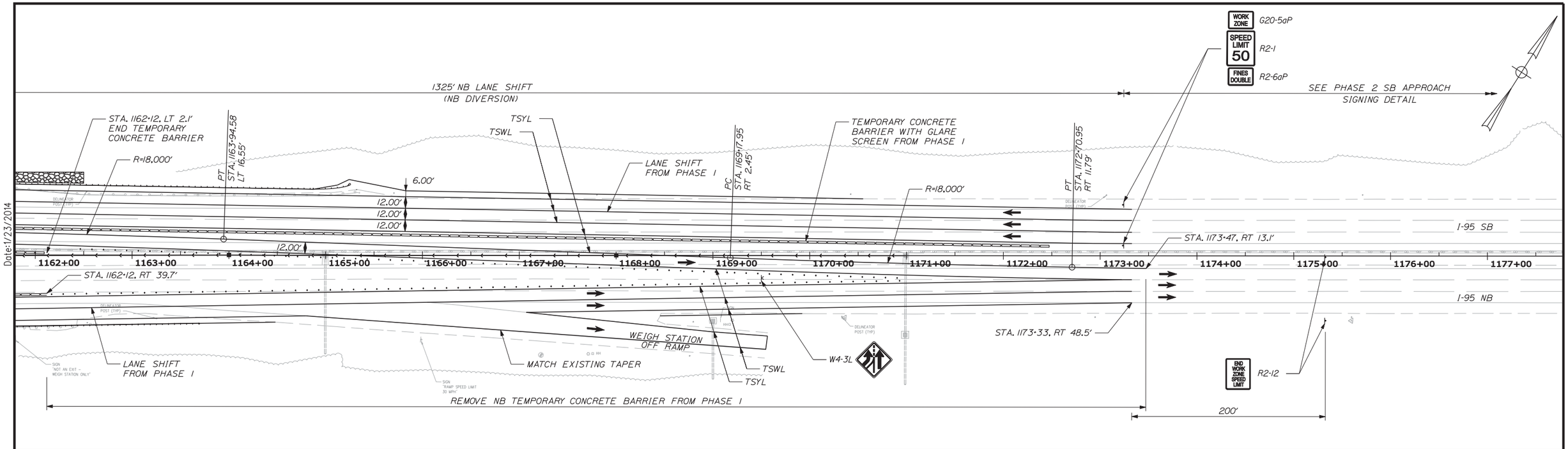

PHASE 2 SEQUENCING NOTES:

1. SEE PHASE 1 FOR SB LANE LAYOUT.
2. SEE PHASE 1 FOR NB OUTSIDE TWO LANES LAYOUT.
3. OPEN NB TRAFFIC TO DIVERSION.
4. BEGIN CONSTRUCTING NB BRIDGE.

Date: 1/23/2014

Filename: ...\planset\025_Plan_TCP2_02.dgn

Scale: 50 0 50 100

No.	Revision	By	Date

Designed by:

VHB Vanasse Hangen Brustlin, Inc.

CONSULTANT PROJECT MANAGER: T. BRYANT

	By	Date		By	Date
Designed	MDS	1/14	Checked	PAC	1/14
Drawn	JAR	1/14	In Charge of	TSB	1/14

VANASSE HANGEN BRUSTLIN, INC.
500 Southborough Dr.
Suite 105B
South Portland, ME 04106
TEL (207) 889-3150
FAX (207) 253-5596

MAINE TURNPIKE

THE GOLD STAR MEMORIAL HIGHWAY

MTA PROJECT MANAGER: Ralph C. Norwood IV, P.E.

BRIDGE REHABILITATION
YORK RIVER BRIDGES

MAINTENANCE OF TRAFFIC PLANS PHASE 2
(5 OF 14)

SHEET NUMBER:

CONTRACT: 2014.05

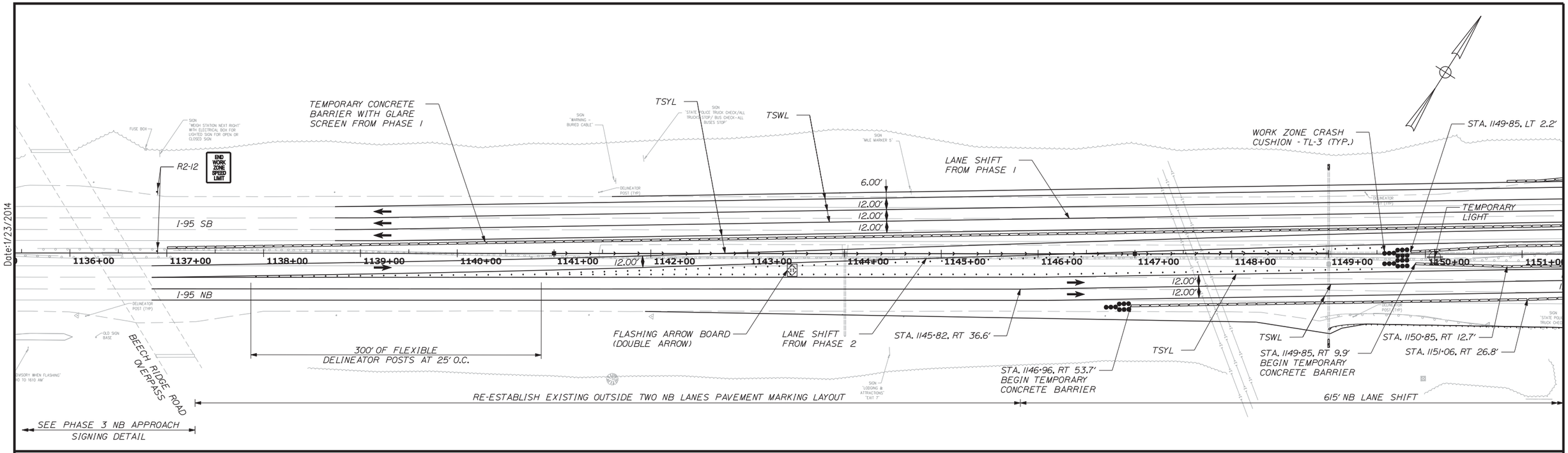

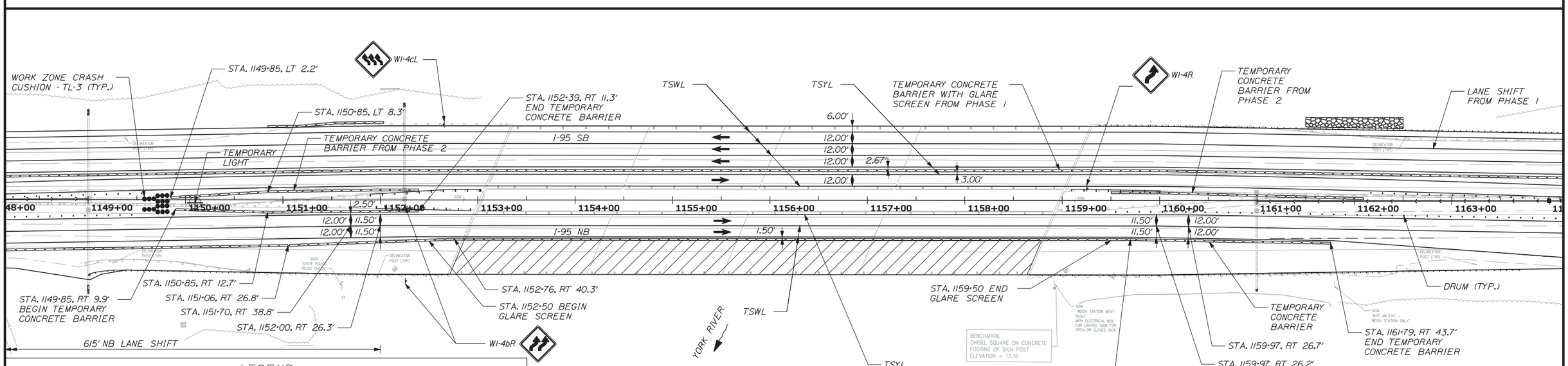

LEGEND

Construction Sign on Post Support	Drums/Channelizing Devices
Construction Sign on Easel	Temporary Concrete Barrier, Type 1
Work Area	Temporary Lighting
	Work Zone Crash Cushion - TL-3

NOTE: TEMPORARY CONCRETE BARRIER OFFSETS ARE TO THE CENTER OF THE BARRIER.

Scale: 50 0 50 100

No.	Revision	By	Date

Designed by:

VHB Vanasse Hangen Brustlin, Inc.

CONSULTANT PROJECT MANAGER: T. BRYANT

	By	Date		By	Date
Designed	MDS	1/14	Checked	PAC	1/14
Drawn	JAR	1/14	In Charge of	TSB	1/14

VANASSE HANGEN BRUSTLIN, INC.
500 Southborough Dr.
Suite 105B
South Portland, ME 04106
TEL (207) 889-3150
FAX (207) 253-5596

MAINE TURNPIKE

THE GOLD STAR MEMORIAL HIGHWAY

MTA PROJECT MANAGER: Ralph C. Norwood IV, P.E.

BRIDGE REHABILITATION
YORK RIVER BRIDGES

MAINTENANCE OF TRAFFIC PLANS PHASE 3
(6 OF 14)

SHEET NUMBER:

CONTRACT: 2014.05

Filename: ...\planset\026_Plan_TCP3_01.dgn

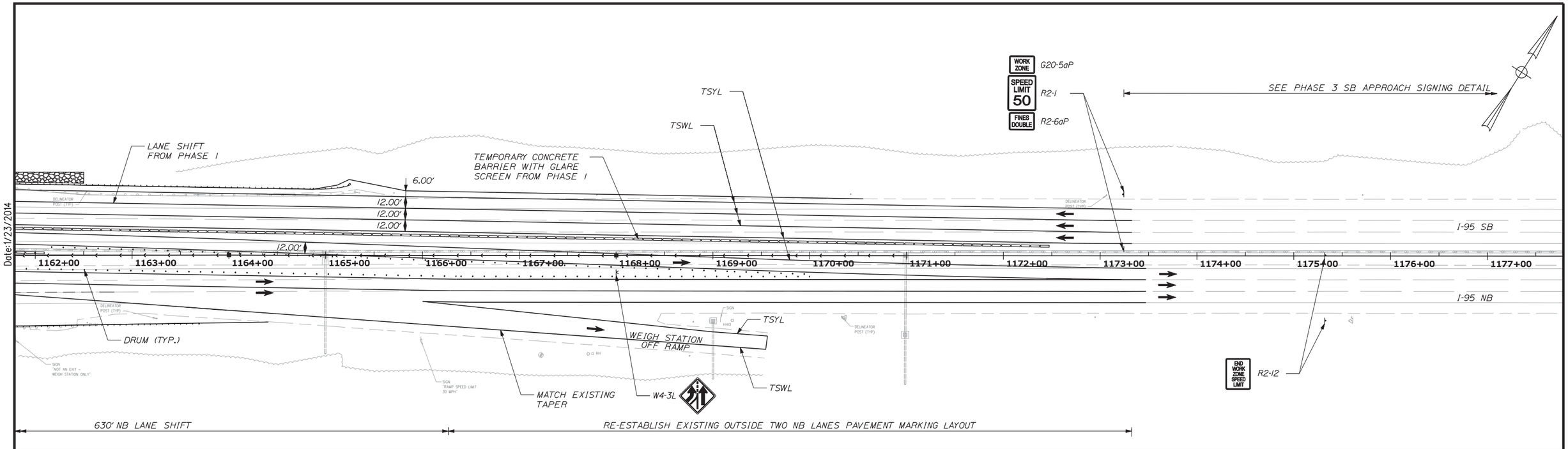

Date:1/23/2014

PHASE 3 SEQUENCING NOTES:

1. SEE PHASE 2 FOR SB LAYOUT.
2. SEE PHASE 2 FOR NB DIVERSION TO SB BRIDGE LAYOUT.
3. SHIFT NB OUTSIDE TWO LANE TO PHASE 3 LAYOUT.
4. COMPLETE NB BRIDGE CONSTRUCTION.

Filename: ...\planset\027_Plan_TCP3_02.dgn

Scale: 50 0 50 100

No.	Revision	By	Date

Designed by:

VHB Vanasse Hangen Brustlin, Inc.

CONSULTANT PROJECT MANAGER: T. BRYANT

	By	Date		By	Date
Designed	MDS	1/14	Checked	PAC	1/14
Drawn	JAR	1/14	In Charge of	TSB	1/14

VANASSE HANGEN BRUSTLIN, INC.
500 Southborough Dr.
Suite 105B
South Portland, ME 04106
TEL (207) 889-3150
FAX (207) 253-5596

MAINE TURNPIKE

THE GOLD STAR MEMORIAL HIGHWAY

MTA PROJECT MANAGER: Ralph C. Norwood IV, P.E.

BRIDGE REHABILITATION
YORK RIVER BRIDGES

MAINTENANCE OF TRAFFIC PLANS PHASE 3
(7 OF 14)

SHEET NUMBER:

CONTRACT: 2014.05

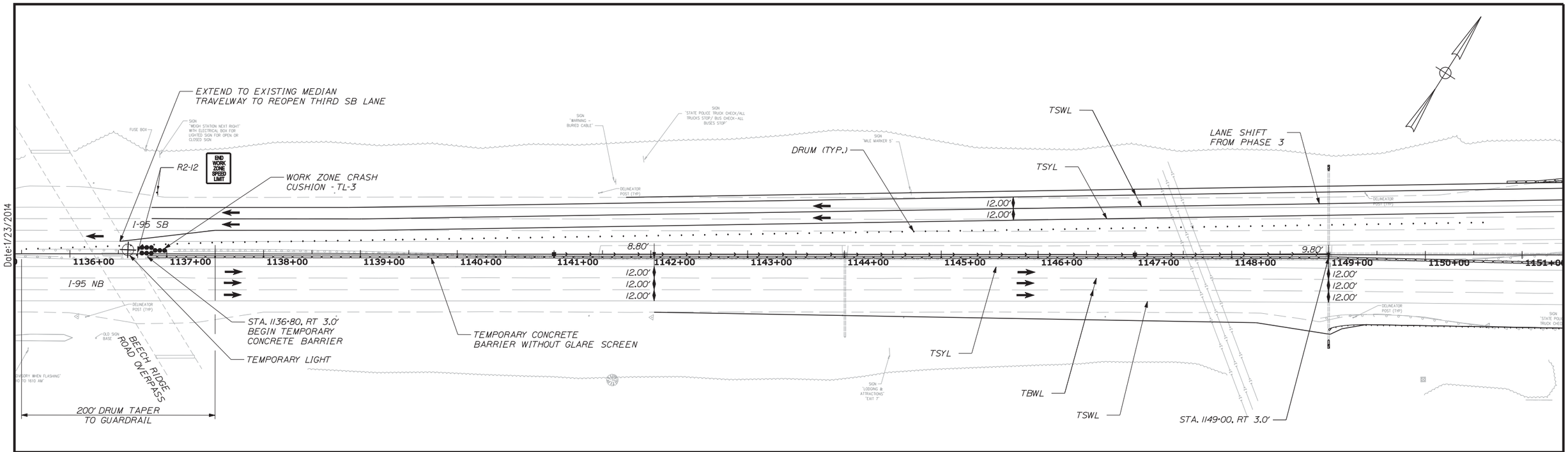

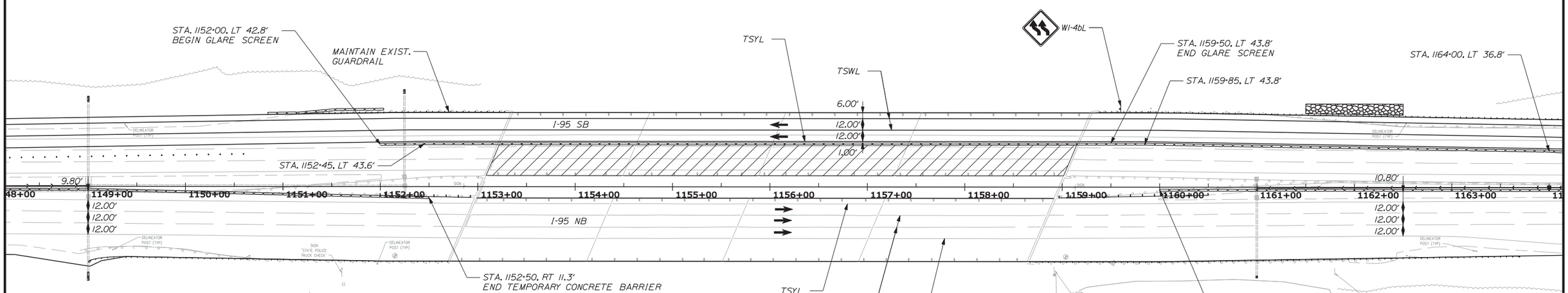

LEGEND

Construction Sign on Post Support	Drums/Channelizing Devices
Construction Sign on Easel	Temporary Concrete Barrier, Type I
Work Area	Temporary Lighting
	Work Zone Crash Cushion - TL-3

NOTE: TEMPORARY CONCRETE BARRIER OFFSETS ARE TO THE CENTER OF BARRIER.

Scale: 50 0 50 100

No.	Revision	By	Date

Designed by:

VHB Vanasse Hangen Brustlin, Inc.

CONSULTANT PROJECT MANAGER: T. BRYANT

	By	Date		By	Date
Designed	MDS	1/14	Checked	PAC	1/14
Drawn	JAR	1/14	In Charge of	TSB	1/14

VANASSE HANGEN BRUSTLIN, INC.
500 Southborough Dr.
Suite 105B
South Portland, ME 04106
TEL (207) 889-3150
FAX (207) 253-5596

MAINE TURNPIKE

THE GOLD STAR MEMORIAL HIGHWAY

MTA PROJECT MANAGER: Ralph C. Norwood IV, P.E.

BRIDGE REHABILITATION
YORK RIVER BRIDGES

MAINTENANCE OF TRAFFIC PLANS PHASE 4
(8 OF 14)

SHEET NUMBER:

CONTRACT: 2014.05

Date: 1/23/2014

Filename: ...\planset\028_Plan_TCP4_01.dgn

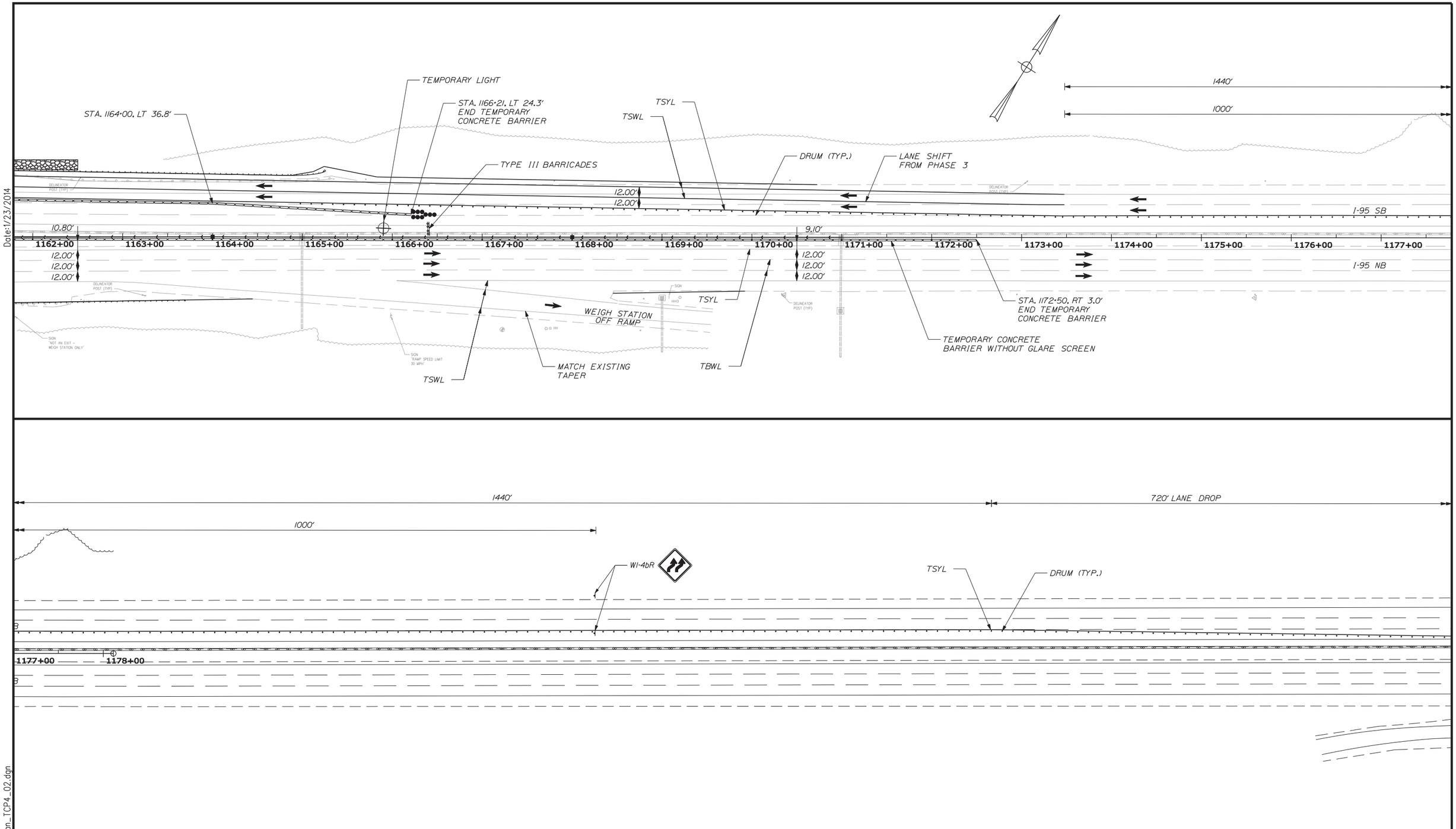

Date:1/23/2014

Filename: ...\planset\029_Plan_TCP4_02.dgn

Scale: 50 0 50 100

No.	Revision	By	Date

Designed by:

VHB Vanasse Hangen Brustlin, Inc.

CONSULTANT PROJECT MANAGER: T. BRYANT

	By	Date		By	Date
Designed	MDS	1/14	Checked	PAC	1/14
Drawn	JAR	1/14	In Charge of	TSB	1/14

VANASSE HANGEN BRUSTLIN, INC.
500 Southborough Dr.
Suite 105B
South Portland, ME 04106
TEL (207) 889-3150
FAX (207) 253-5596

MAINE TURNPIKE

THE GOLD STAR MEMORIAL HIGHWAY

MTA PROJECT MANAGER: Ralph C. Norwood IV, P.E.

BRIDGE REHABILITATION
YORK RIVER BRIDGES

MAINTENANCE OF TRAFFIC PLANS PHASE 4
(9 OF 14)

SHEET NUMBER:

CONTRACT: 2014.05

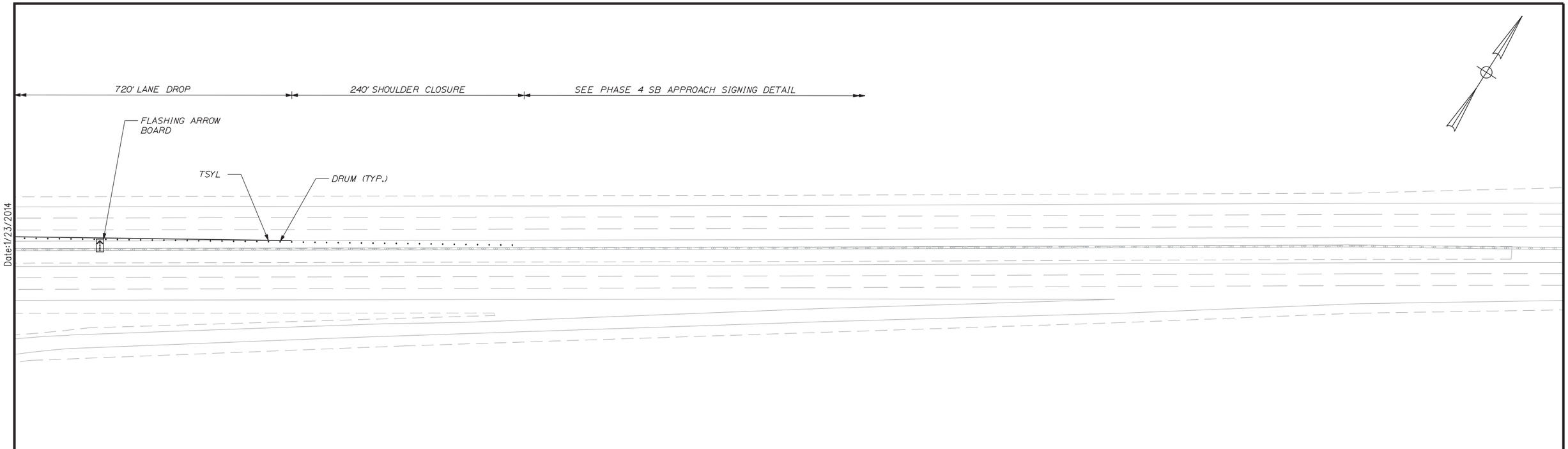

PHASE 4 SEQUENCING NOTES:

1. PHASE 4 IS PROVIDED TO ALLOW THE CONTRACTOR THE ABILITY TO WORK ON THE SOUTHBOUND BRIDGE DURING THE PERIOD FROM NOVEMBER 1, 2014 TO MAY 22, 2015 WHEN TWO SOUTHBOUND LANES OF TRAFFIC ARE ADEQUATE FOR I-95 SB TRAFFIC FLOW. IF THE CONTRACTOR CHOOSES NOT TO UTILIZE THIS PHASE, THREE SOUTHBOUND LANES SHALL BE PROVIDED IN A LAYOUT THAT MATCHES THE EXISTING CONDITION. UNDER NO CIRCUMSTANCES SHALL A LANE OF TRAFFIC UTILIZE THE MEDIAN DIVERSION DURING THIS PHASE.
2. AFTER PHASE 3 CONSTRUCTION IS COMPLETE, SHIFT NB TRAFFIC TO PROPOSED NB PHASE 4 LAYOUT.
3. IN PHASE 4, ALL TEMPORARY PAVEMENT MARKINGS FOR THE NORTHBOUND ROADWAY SHALL BE PAINT.
4. COVER (OR REMOVE) CONSTRUCTION SIGNS ALONG THE NORTHBOUND ROADWAY UNTIL PHASE 5.
5. RESET BARRIER TO ACCOMMODATE SB PHASE 4 LAYOUT, THEN SHIFT SB TRAFFIC.
6. BEGIN PHASE 4 SB BRIDGE CONSTRUCTION.

Date:1/23/2014

Filename: ...\planset\030_Plan_TCP4_03.dgn

Scale: 50 0 50 100

No.	Revision	By	Date

Designed by:

VHB Vanasse Hangen Brustlin, Inc.

CONSULTANT PROJECT MANAGER: T. BRYANT

	By	Date		By	Date
Designed	MDS	1/14	Checked	PAC	1/14
Drawn	JAR	1/14	In Charge of	TSB	1/14

VANASSE HANGEN BRUSTLIN, INC.
500 Southborough Dr.
Suite 105B
South Portland, ME 04106
TEL (207) 889-3150
FAX (207) 253-5596

MAINE TURNPIKE

THE GOLD STAR MEMORIAL HIGHWAY

MTA PROJECT MANAGER: Ralph C. Norwood IV, P.E.

BRIDGE REHABILITATION
YORK RIVER BRIDGES

MAINTENANCE OF TRAFFIC PLANS PHASE 4
(10 OF 14)

SHEET NUMBER:

CONTRACT: 2014.05

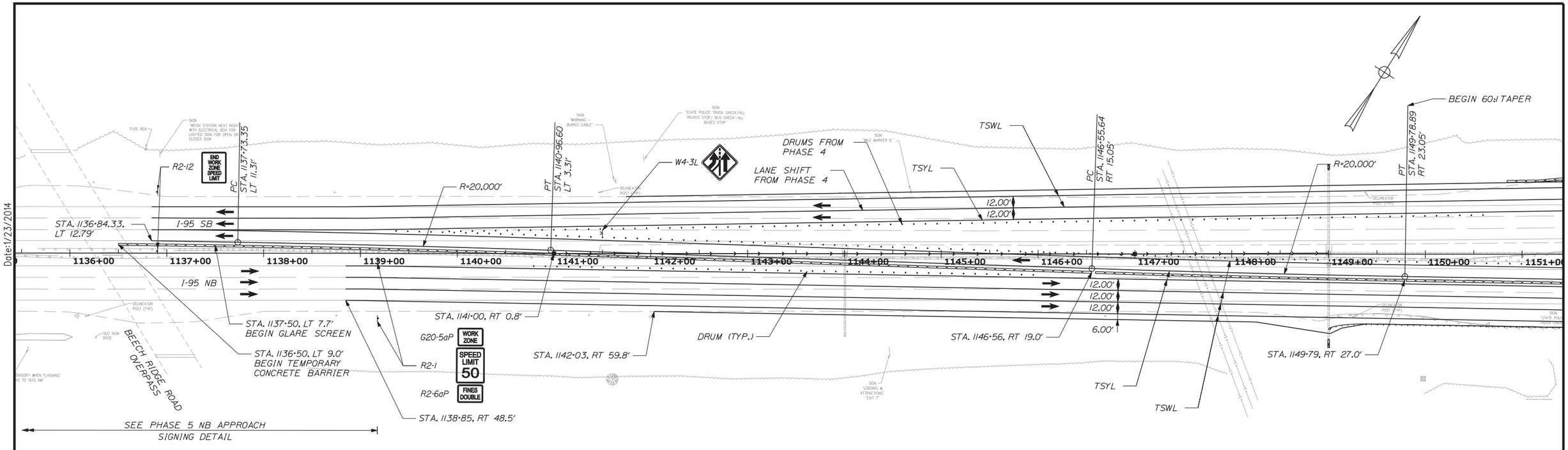

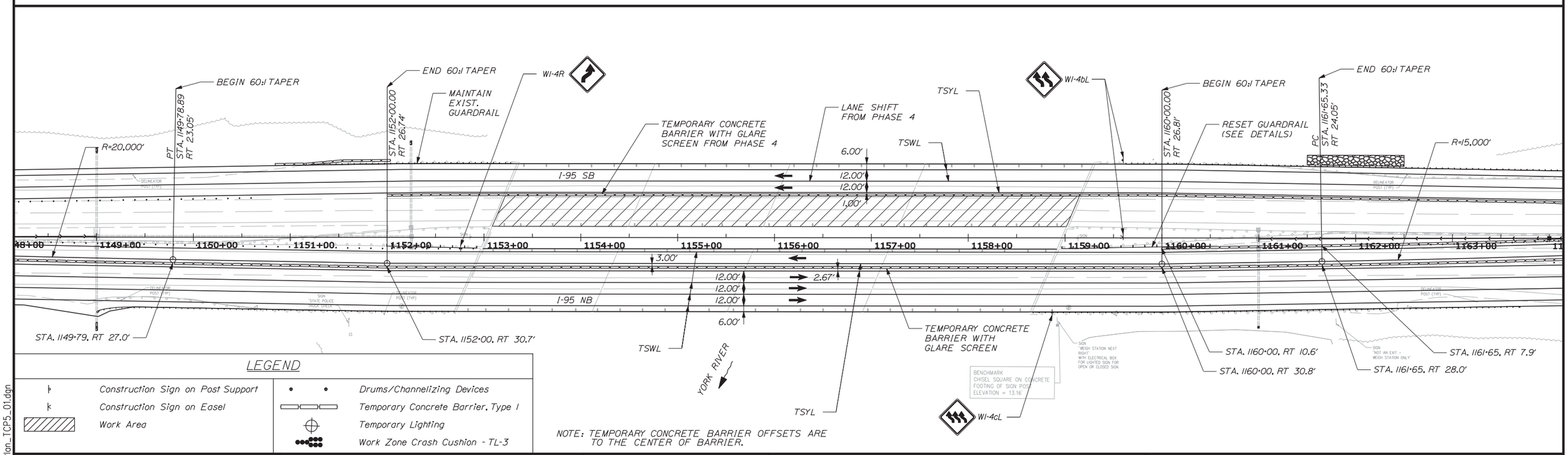

LEGEND

Construction Sign on Post Support	Drums/Channelizing Devices
Construction Sign on Easel	Temporary Concrete Barrier, Type I
Work Area	Temporary Lighting
	Work Zone Crash Cushion - TL-3

NOTE: TEMPORARY CONCRETE BARRIER OFFSETS ARE TO THE CENTER OF BARRIER.

Scale: 50 0 50 100

No.	Revision	By	Date

Designed by:

VHB Vanasse Hangen Brustlin, Inc.

CONSULTANT PROJECT MANAGER: T. BRYANT

	By	Date		By	Date
Designed	MDS	1/14	Checked	PAC	1/14
Drawn	JAR	1/14	In Charge of	TSB	1/14

VANASSE HANGEN BRUSTLIN, INC.
500 Southborough Dr.
Suite 105B
South Portland, ME 04106
TEL (207) 889-3150
FAX (207) 253-5596

MAINE TURNPIKE

THE GOLD STAR MEMORIAL HIGHWAY

MTA PROJECT MANAGER: Ralph C. Norwood IV, P.E.

BRIDGE REHABILITATION
YORK RIVER BRIDGES

MAINTENANCE OF TRAFFIC PLANS PHASE 5
(11 OF 14)

SHEET NUMBER:

CONTRACT: 2014.05

Date: 1/23/2014

Filename: ...\planset\031_Plan_TCP5_01.dgn

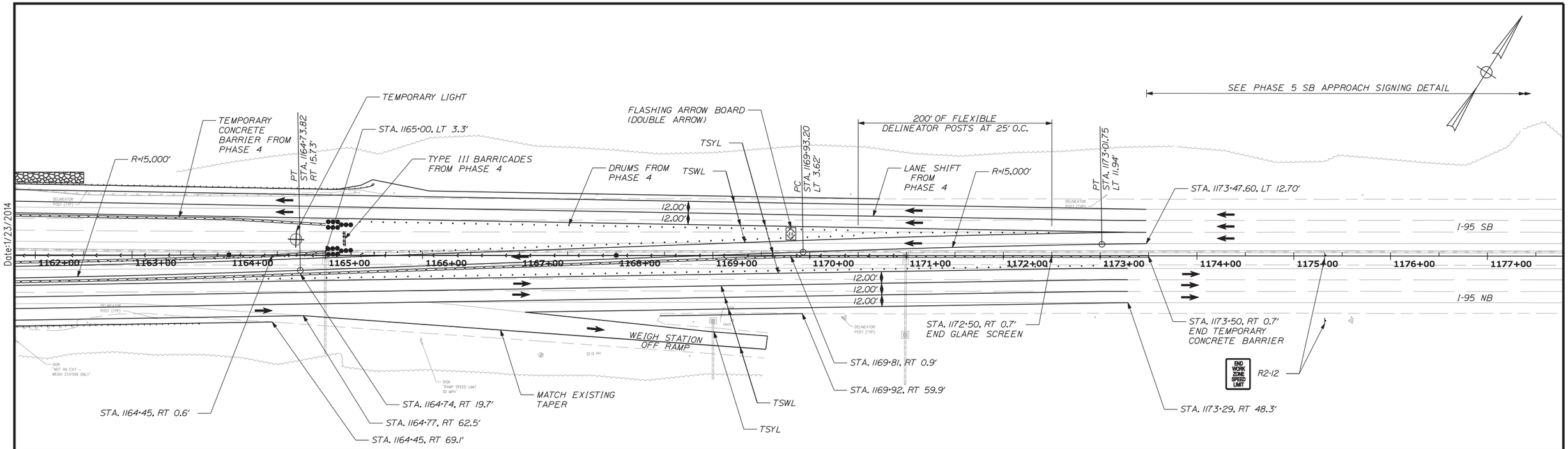

PHASE 5 SEQUENCING NOTES:

1. SEE PHASE 4 FOR SB DIVERSION TO SB BRIDGE LAYOUTS.
2. AFTER COMPLETION OF PHASE 4, RESET TEMPORARY CONCRETE BARRIER AND PAVEMENT MARKINGS TO PHASE 5 NB AND SB LAYOUT. SHIFT NB AND SB TRAFFIC.
3. UNCOVER (OR REINSTALL) CONSTRUCTION SIGNS ALONG THE NORTHBOUND ROADWAY AND INSTALL ALL OTHER PHASE 5 CONSTRUCTION SIGNS.
4. CONSTRUCT PHASE 5 SB BRIDGE.

Date: 1/23/2014

Filename: ...\planset\032_Plan_TCP5_02.dgn

Scale: 50 0 50 100

No.	Revision	By	Date

Designed by:

VHB Vanasse Hangen Brustlin, Inc.

CONSULTANT PROJECT MANAGER: T. BRYANT

	By	Date		By	Date
Designed	MDS	1/14	Checked	PAC	1/14
Drawn	JAR	1/14	In Charge of	TSB	1/14

VANASSE HANGEN BRUSTLIN, INC.
500 Southborough Dr.
Suite 105B
South Portland, ME 04106
TEL (207) 889-3150
FAX (207) 253-5596

MAINE TURNPIKE

THE GOLD STAR MEMORIAL HIGHWAY

MTA PROJECT MANAGER: Ralph C. Norwood IV, P.E.

BRIDGE REHABILITATION
YORK RIVER BRIDGES

MAINTENANCE OF TRAFFIC PLANS PHASE 5
(12 OF 14)

SHEET NUMBER:

CONTRACT: 2014.05

Date:1/23/2014

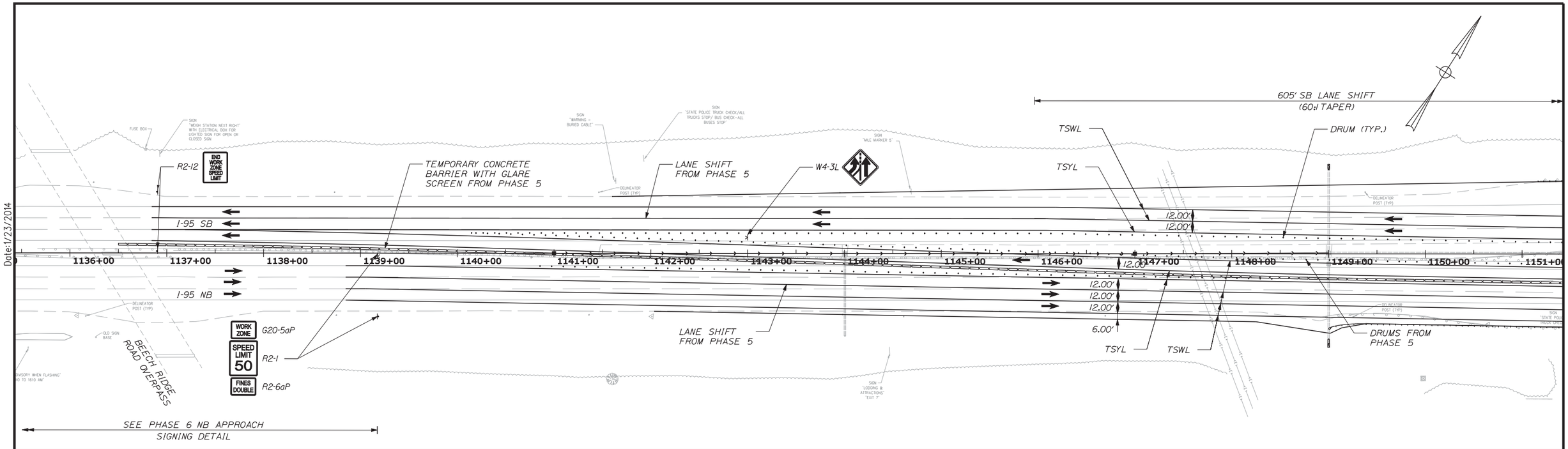

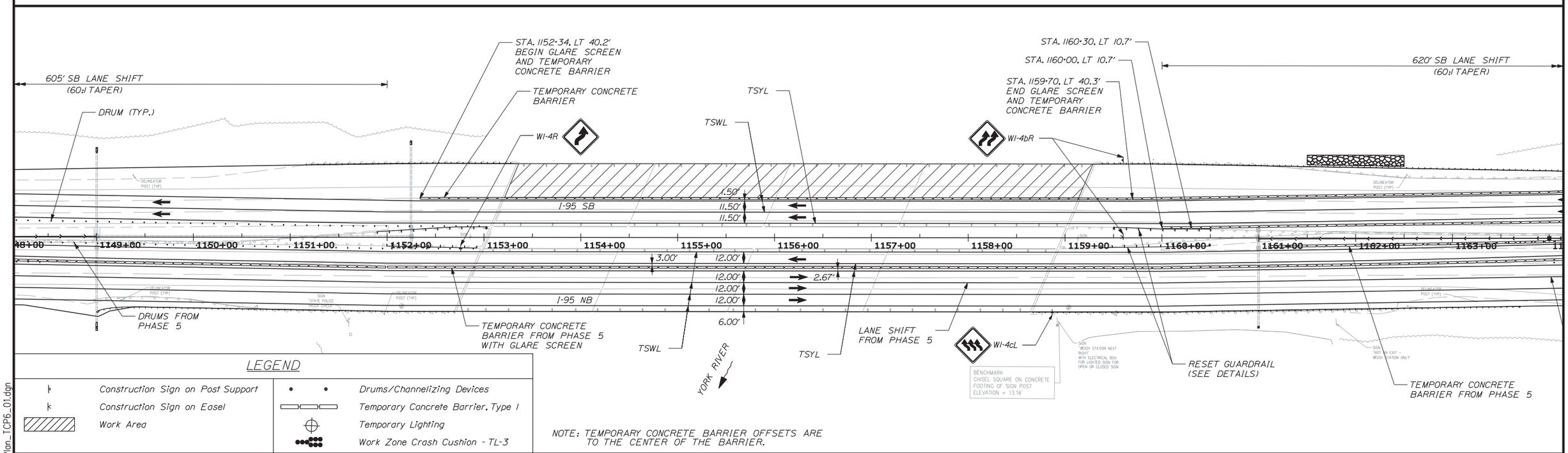

LEGEND

Construction Sign on Post Support	Drums/Channelizing Devices
Construction Sign on Easel	Temporary Concrete Barrier, Type I
Work Area	Temporary Lighting
	Work Zone Crash Cushion - TL-3

NOTE: TEMPORARY CONCRETE BARRIER OFFSETS ARE TO THE CENTER OF THE BARRIER.

Scale: 50 0 50 100

No.	Revision	By	Date

Designed by:

VHB Vanasse Hangen Brustlin, Inc.

CONSULTANT PROJECT MANAGER: T. BRYANT

	By	Date		By	Date
Designed	MDB	1/14	Checked	RAC	1/14
Drawn	JAR	1/14	In Charge of	TSB	1/14

VANASSE HANGEN BRUSTLIN, INC.
500 Southborough Dr.
Suite 105B
South Portland, ME 04106
TEL (207) 889-3150
FAX (207) 253-5596

MAINE TURNPIKE

THE GOLD STAR MEMORIAL HIGHWAY

MTA PROJECT MANAGER: Ralph C. Norwood IV, P.E.

BRIDGE REHABILITATION
YORK RIVER BRIDGES

MAINTENANCE OF TRAFFIC PLANS PHASE 6
(13 OF 14)

SHEET NUMBER:

CONTRACT: 2014.05

Filename: ...\planset\033_Plan_TCP6_01.dgn

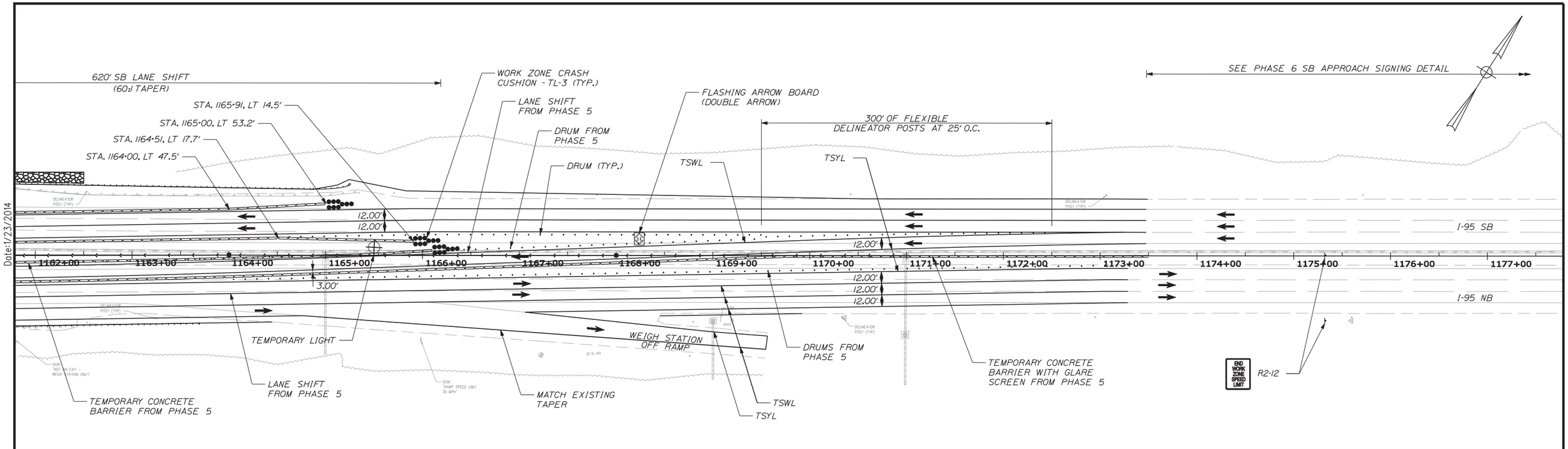

Date:1/23/2014

PHASE 6 SEQUENCING NOTES:

1. RESET BARRIER TO ACCOMMODATE SB PHASE 6 LAYOUT. THEN SHIFT SB TRAFFIC.
2. COMPLETE PHASE 6 SB BRIDGE CONSTRUCTION.
3. AFTER PHASE 6 BRIDGE WORK IS COMPLETED, SHIFT SB TRAFFIC OFF SB DIVERSION IN SIMILAR LAYOUT TO PHASE 1. REMOVE TEMPORARY CONCRETE BARRIER AND RESET MEDIAN GUARDRAIL.
4. REMOVE TEMPORARY PAVEMENT MARKINGS. INSTALL PROPOSED PAVEMENT MARKINGS AND SHIFT NB AND SB TRAFFIC TO FINAL LAYOUT.
5. LOAM AND SEED.

Filename: ...\planset\034_Plan_TCP6_02.dgn

Scale: 50 0 50 100

No.	Revision	By	Date

Designed by:

VHB Vanasse Hangen Brustlin, Inc.

CONSULTANT PROJECT MANAGER: T. BRYANT

	By	Date		By	Date
Designed	MDS	1/14	Checked	PAC	1/14
Drawn	JAR	1/14	In Charge of	TSB	1/14

VANASSE HANGEN BRUSTLIN, INC.
500 Southborough Dr.
Suite 105B
South Portland, ME 04106
TEL (207) 889-3150
FAX (207) 253-5596

MAINE TURNPIKE

THE GOLD STAR MEMORIAL HIGHWAY

MTA PROJECT MANAGER: Ralph C. Norwood IV, P.E.

BRIDGE REHABILITATION
YORK RIVER BRIDGES

MAINTENANCE OF TRAFFIC PLANS PHASE 6
(14 OF 14)

SHEET NUMBER:

CONTRACT: 2014.05

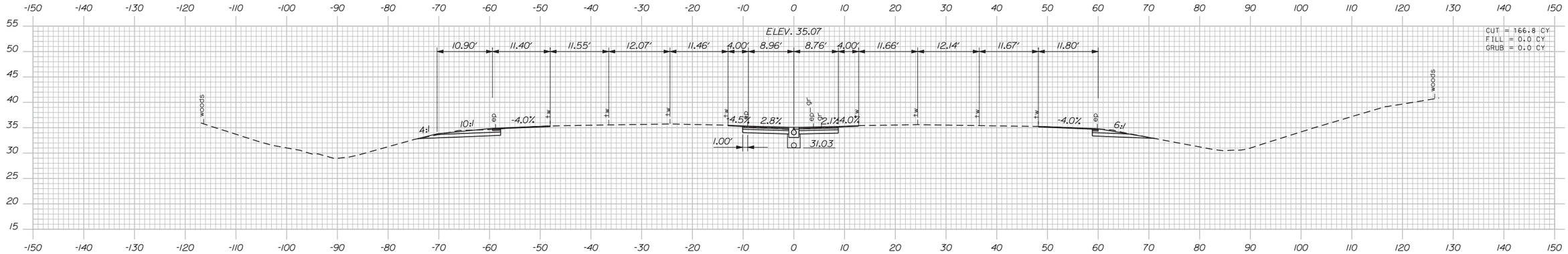

1142+00.00

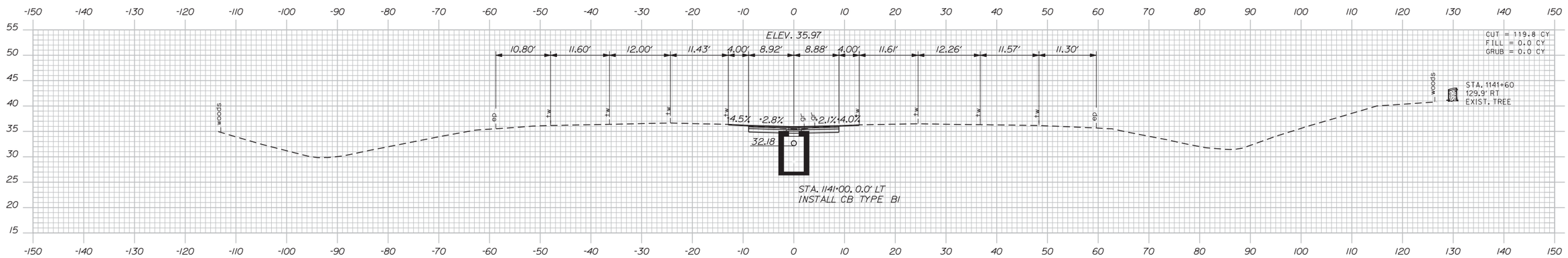

1141+00.00

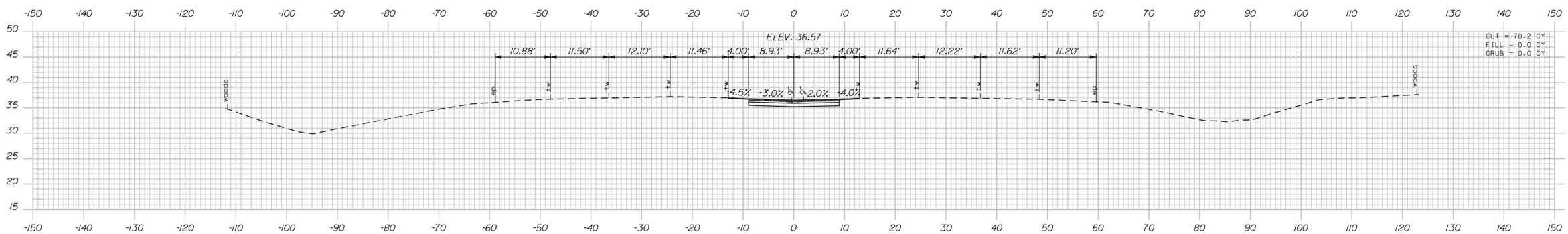

1140+00.00

NOTE:

THE TRAVEL WAY DIMENSIONS ON THE CROSS SECTIONS ARE TAKEN FROM THE SURVEY. THE INTENT OF THE PERMANENT PAVEMENT MARKING IS TO REPLICATE THEM IN EXISTING LOCATIONS. THEREFORE, THE VARYING DIMENSIONS HAVE BEEN SHOWN FOR REFERENCE PURPOSES.

Scale: As Noted

No.	Revision	By	Date

Designed by:

VHB Vanasse Hangen Brustlin, Inc.

CONSULTANT PROJECT MANAGER: T. BRYANT

	By	Date		By	Date
Designed	KDP	1/14	Checked	PAC	1/14
Drawn	KDP	1/14	In Charge of	TSB	1/14

VANASSE HANGEN BRUSTLIN, INC.
500 Southborough Dr.
Suite 105B
South Portland, ME 04106
TEL (207) 889-3150
FAX (207) 253-5596

MAINE TURNPIKE

THE GOLD STAR MEMORIAL HIGHWAY

MTA PROJECT MANAGER: Ralph C. Norwood IV, P.E.

BRIDGE REHABILITATION
YORK RIVER BRIDGES

MAINTENANCE OF TRAFFIC CROSS SECTIONS

SHEET NUMBER:
35 OF 103

CONTRACT: 2014.05

Sta. 1140+00.00 to Sta. 1142+00.00

Date:1/23/2014

Filename: ...\cad\te\planset\035_XSect.dgn

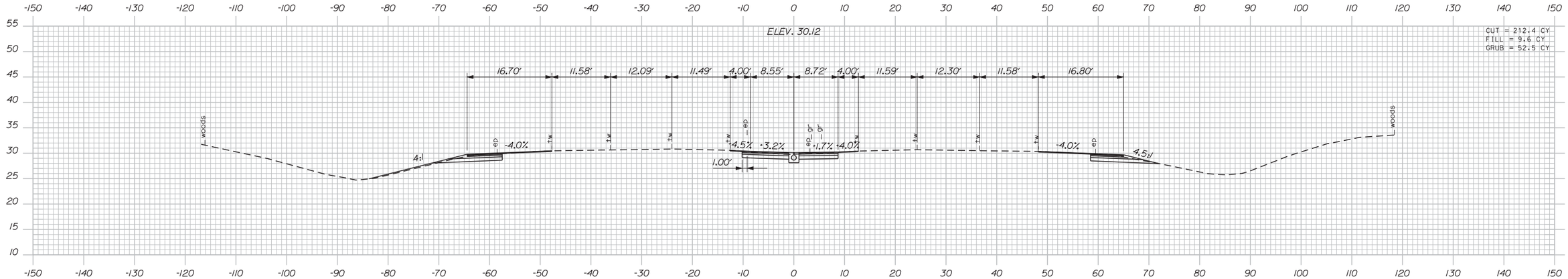

1145+00.00

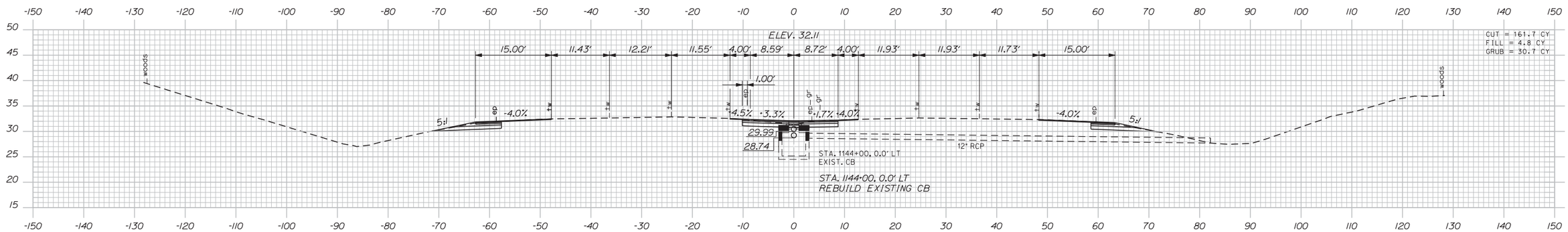

1144+00.00

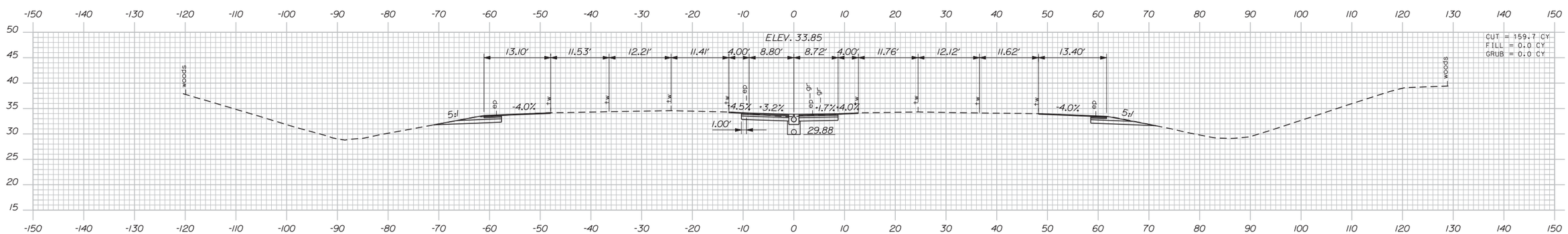

1143+00.00

NOTE:

THE TRAVEL WAY DIMENSIONS ON THE CROSS SECTIONS ARE TAKEN FROM THE SURVEY. THE INTENT OF THE PERMANENT PAVEMENT MARKING IS TO REPLICATE THEM IN EXISTING LOCATIONS. THEREFORE, THE VARYING DIMENSIONS HAVE BEEN SHOWN FOR REFERENCE PURPOSES.

Date:1/23/2014

Filename: ...\cad\te\planset\035_XSect.dgn

Scale: As Noted

No.	Revision	By	Date

Designed by:

Vanasse Hangen Brustlin, Inc.

CONSULTANT PROJECT MANAGER: T. BRYANT

	By	Date		By	Date
Designed	KDP	1/14	Checked	PAC	1/14
Drawn	KDP	1/14	In Charge of	TSB	1/14

VANASSE HANGEN BRUSTLIN, INC.
500 Southborough Dr.
Suite 105B
South Portland, ME 04106
TEL (207) 889-3150
FAX (207) 253-5596

MAINE TURNPIKE

THE GOLD STAR MEMORIAL HIGHWAY

MTA PROJECT MANAGER: Ralph C. Norwood IV, P.E.

BRIDGE REHABILITATION
YORK RIVER BRIDGES

MAINTENANCE OF TRAFFIC CROSS SECTIONS

CONTRACT: 2014.05

SHEET NUMBER:

Sta. 1143+00.00 to Sta. 1145+00.00

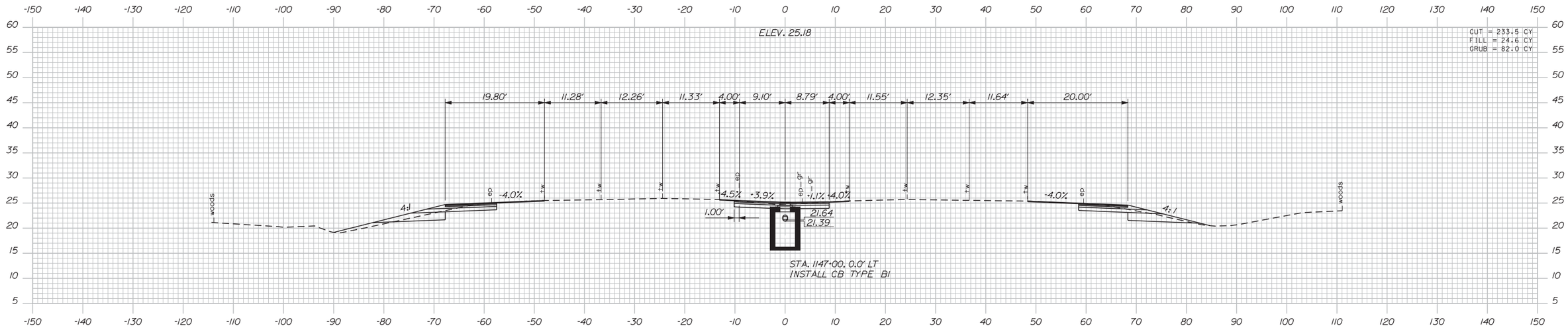

1147+00.00

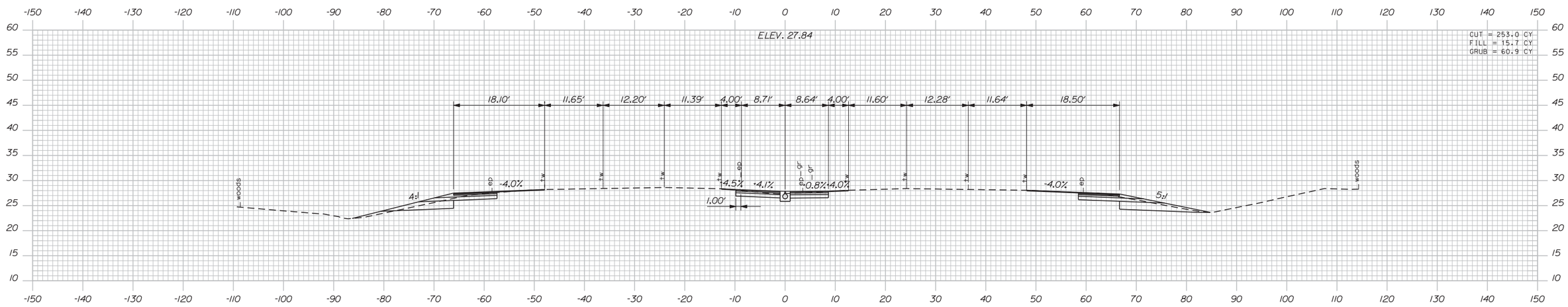

1146+00.00

NOTE:

THE TRAVEL WAY DIMENSIONS ON THE CROSS SECTIONS ARE TAKEN FROM THE SURVEY. THE INTENT OF THE PERMANENT PAVEMENT MARKING IS TO REPLICATE THEM IN EXISTING LOCATIONS. THEREFORE, THE VARYING DIMENSIONS HAVE BEEN SHOWN FOR REFERENCE PURPOSES.

Date: 1/23/2014

Filename: ...\cad\te\planset\035_XSect.dgn

Scale: As Noted

No.	Revision	By	Date

Designed by:

VHB Vanasse Hangen Brustlin, Inc.

CONSULTANT PROJECT MANAGER: T. BRYANT

	By	Date		By	Date
Designed	KDP	1/14	Checked	PAC	1/14
Drawn	KDP	1/14	In Charge of	TSB	1/14

VANASSE HANGEN BRUSTLIN, INC.
500 Southborough Dr.
Suite 105B
South Portland, ME 04106
TEL (207) 889-3150
FAX (207) 253-5596

MAINE TURNPIKE

THE GOLD STAR MEMORIAL HIGHWAY

MTA PROJECT MANAGER: Ralph C. Norwood IV, P.E.

BRIDGE REHABILITATION
YORK RIVER BRIDGES

MAINTENANCE OF TRAFFIC CROSS SECTIONS

CONTRACT: 2014.05

SHEET NUMBER:
37 OF 103

Sta. 1146+00.00 to Sta. 1147+00.00

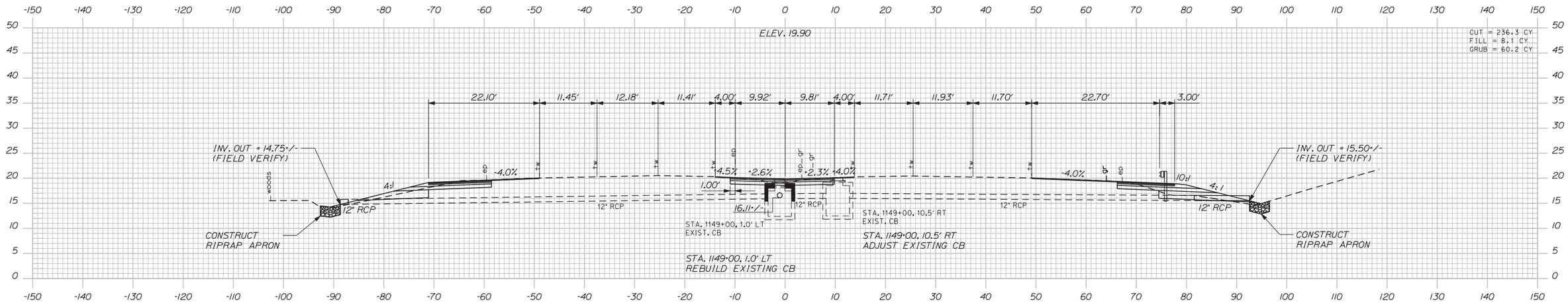

1149+00.00

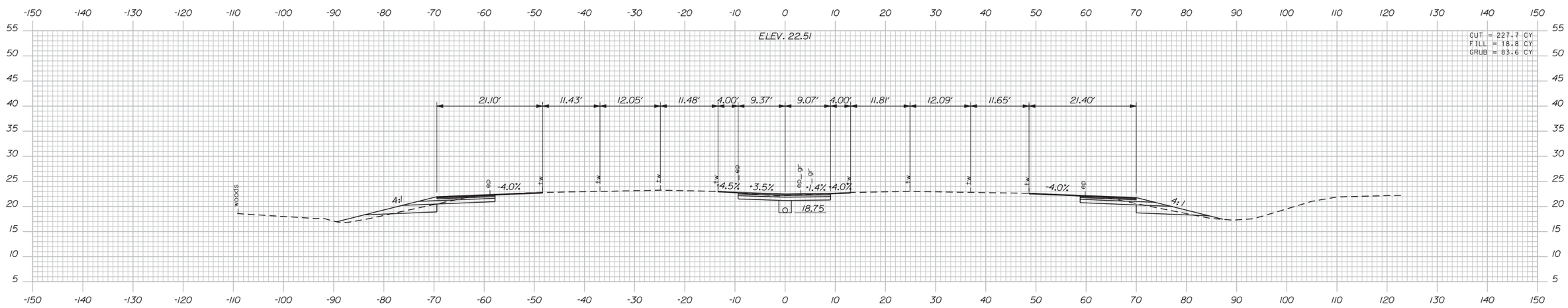

1148+00.00

NOTE:

THE TRAVEL WAY DIMENSIONS ON THE CROSS SECTIONS ARE TAKEN FROM THE SURVEY. THE INTENT OF THE PERMANENT PAVEMENT MARKING IS TO REPLICATE THEM IN EXISTING LOCATIONS. THEREFORE, THE VARYING DIMENSIONS HAVE BEEN SHOWN FOR REFERENCE PURPOSES.

Scale: As Noted

No.	Revision	By	Date

Designed by:

Vanasse Hangen Brustlin, Inc.

CONSULTANT PROJECT MANAGER: T. BRYANT

	By	Date		By	Date
Designed	KDP	1/14	Checked	PAC	1/14
Drawn	KDP	1/14	In Charge of	TSB	1/14

VANASSE HANGEN BRUSTLIN, INC.
500 Southborough Dr.
Suite 105B
South Portland, ME 04106
TEL (207) 889-3150
FAX (207) 253-5596

MAINE TURNPIKE

THE GOLD STAR MEMORIAL HIGHWAY

MTA PROJECT MANAGER: Ralph C. Norwood IV, P.E.

BRIDGE REHABILITATION
YORK RIVER BRIDGES

MAINTENANCE OF TRAFFIC CROSS SECTIONS

CONTRACT: 2014.05

SHEET NUMBER:
38 OF 103

Sta. 1148+00.00 to Sta. 1149+00.00

Date: 1/23/2014

Filename: ...\cad\te\planset\035_XSect.dgn

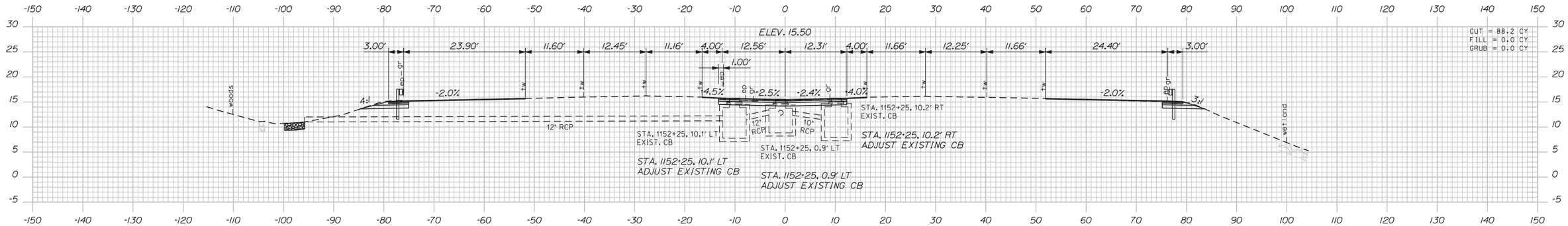

1152+00.00

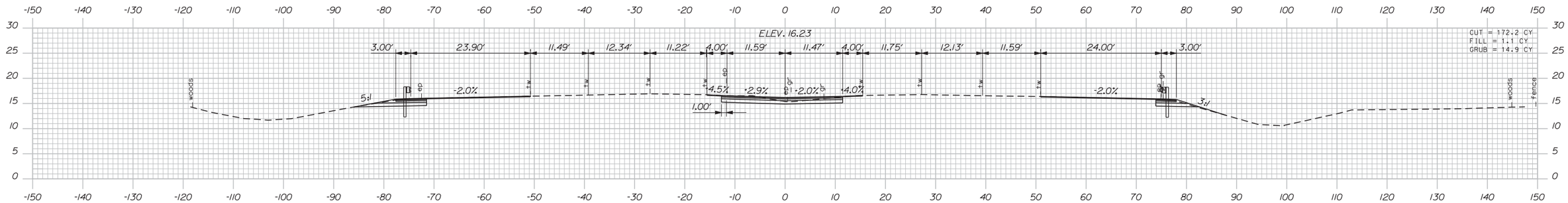

1151+00.00

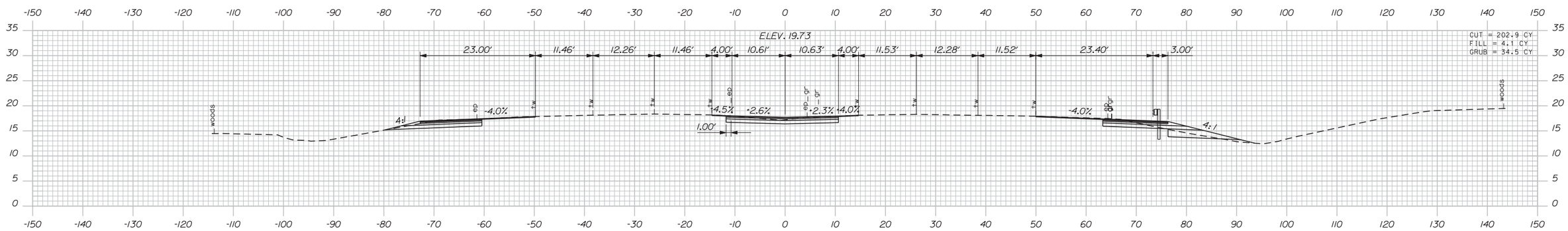

1150+00.00

NOTE:

THE TRAVEL WAY DIMENSIONS ON THE CROSS SECTIONS ARE TAKEN FROM THE SURVEY. THE INTENT OF THE PERMANENT PAVEMENT MARKING IS TO REPLICATE THEM IN EXISTING LOCATIONS. THEREFORE, THE VARYING DIMENSIONS HAVE BEEN SHOWN FOR REFERENCE PURPOSES.

Date:1/23/2014

Filename: ...\cad\te\planset\035_XSect.dgn

Scale: As Noted

No.	Revision	By	Date

Designed by:

Vanasse Hangen Brustlin, Inc.

CONSULTANT PROJECT MANAGER: T. BRYANT

	By	Date		By	Date
Designed	KDP	1/14	Checked	PAC	1/14
Drawn	KDP	1/14	In Charge of	TSB	1/14

VANASSE HANGEN BRUSTLIN, INC.
500 Southborough Dr.
Suite 105B
South Portland, ME 04106
TEL (207) 889-3150
FAX (207) 253-5596

MAINE TURNPIKE

MTA PROJECT MANAGER: Ralph C. Norwood IV, P.E.

THE GOLD STAR MEMORIAL HIGHWAY

BRIDGE REHABILITATION
YORK RIVER BRIDGES

MAINTENANCE OF TRAFFIC CROSS SECTIONS

CONTRACT: 2014.05

SHEET NUMBER:

Sta. 1150+00.00 to Sta. 1152+00.00

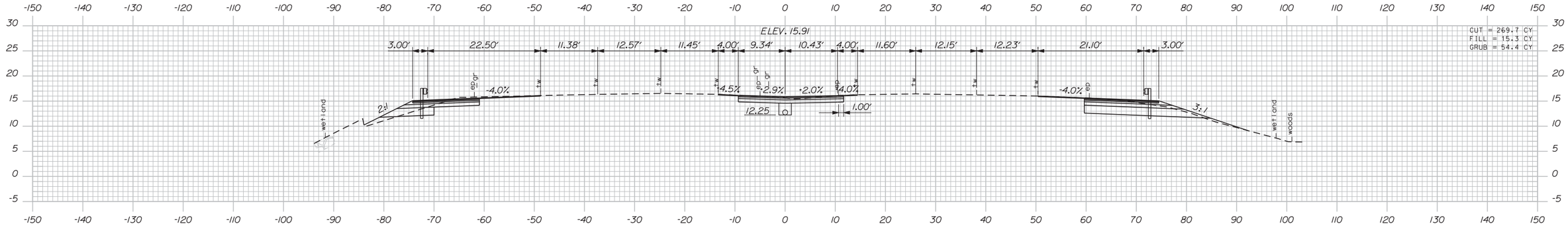

1163+00.00

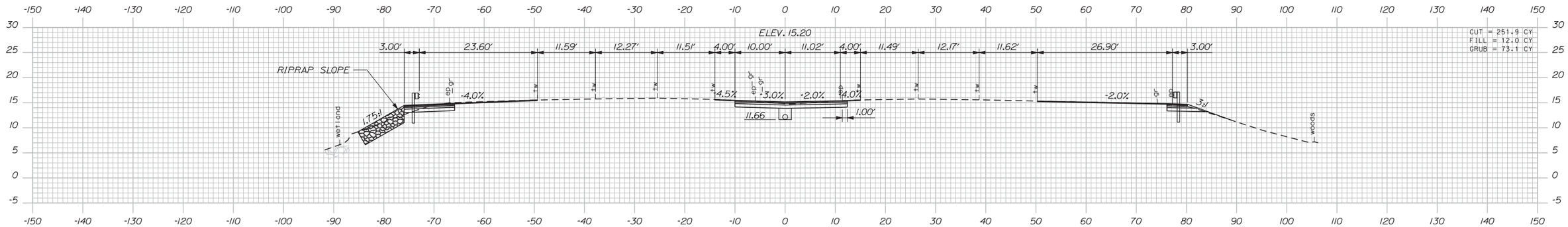

1162+00.00

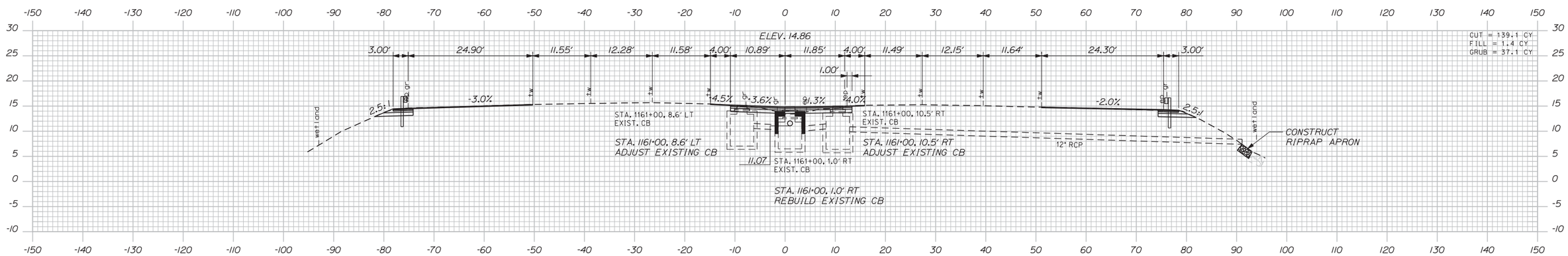

1161+00.00

NOTE:

THE TRAVEL WAY DIMENSIONS ON THE CROSS SECTIONS ARE TAKEN FROM THE SURVEY. THE INTENT OF THE PERMANENT PAVEMENT MARKING IS TO REPLICATE THEM IN EXISTING LOCATIONS. THEREFORE, THE VARYING DIMENSIONS HAVE BEEN SHOWN FOR REFERENCE PURPOSES.

Date:1/23/2014

Filename: ...\cad\te\planset\035_XSect.dgn

Scale: As Noted

No.	Revision	By	Date

Designed by:

VHB Vanasse Hangen Brustlin, Inc.

CONSULTANT PROJECT MANAGER: T. BRYANT

	By	Date		By	Date
Designed	KDP	1/14	Checked	PAC	1/14
Drawn	KDP	1/14	In Charge of	TSB	1/14

VANASSE HANGEN BRUSTLIN, INC.
500 Southborough Dr.
Suite 105B
South Portland, ME 04106
TEL (207) 889-3150
FAX (207) 253-5596

MAINE TURNPIKE

THE GOLD STAR MEMORIAL HIGHWAY

MTA PROJECT MANAGER: Ralph C. Norwood IV, P.E.

BRIDGE REHABILITATION
YORK RIVER BRIDGES

MAINTENANCE OF TRAFFIC CROSS SECTIONS

SHEET NUMBER:

CONTRACT: 2014.05

Sta. 1161+00.00 to Sta. 1163+00.00

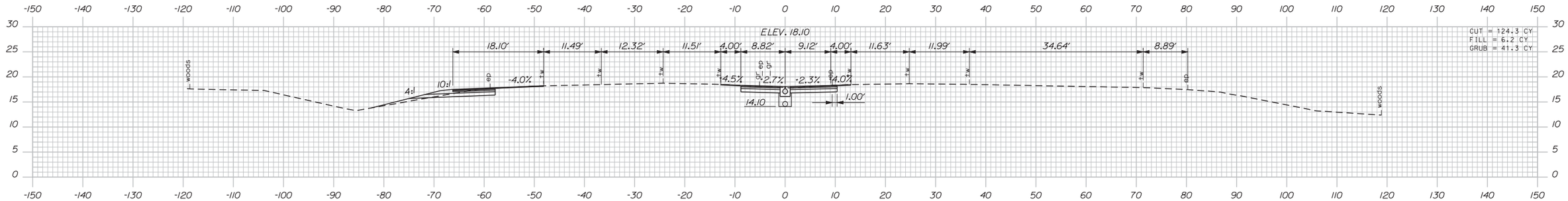

1166+00.00

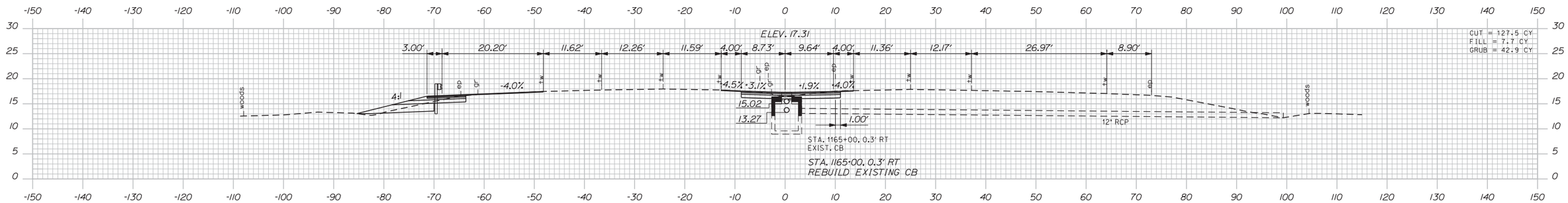

1165+00.00

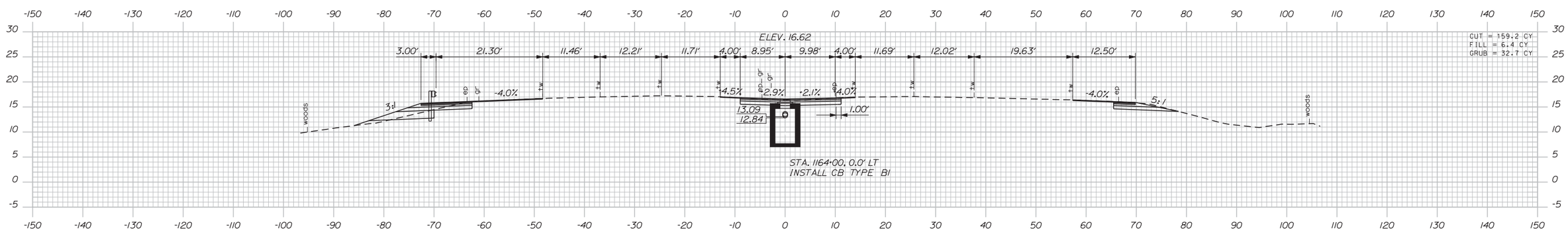

1164+00.00

NOTE:

THE TRAVEL WAY DIMENSIONS ON THE CROSS SECTIONS ARE TAKEN FROM THE SURVEY. THE INTENT OF THE PERMANENT PAVEMENT MARKING IS TO REPLICATE THEM IN EXISTING LOCATIONS. THEREFORE, THE VARYING DIMENSIONS HAVE BEEN SHOWN FOR REFERENCE PURPOSES.

Date:1/23/2014

Filename: ...\cad\te\planset\035_XSect.dgn

Scale: As Noted

No.	Revision	By	Date

Designed by:

VHB Vanasse Hangen Brustlin, Inc.

CONSULTANT PROJECT MANAGER: T. BRYANT

	By	Date		By	Date
Designed	KDP	1/14	Checked	PAC	1/14
Drawn	KDP	1/14	In Charge of	TSB	1/14

VANASSE HANGEN BRUSTLIN, INC.
500 Southborough Dr.
Suite 105B
South Portland, ME 04106
TEL (207) 889-3150
FAX (207) 253-5596

MAINE TURNPIKE

THE GOLD STAR MEMORIAL HIGHWAY

MTA PROJECT MANAGER: Ralph C. Norwood IV, P.E.

BRIDGE REHABILITATION
YORK RIVER BRIDGES

MAINTENANCE OF TRAFFIC CROSS SECTIONS

CONTRACT: 2014.05

SHEET NUMBER: 41 OF 103

Sta. 1164+00.00 to Sta. 1166+00.00

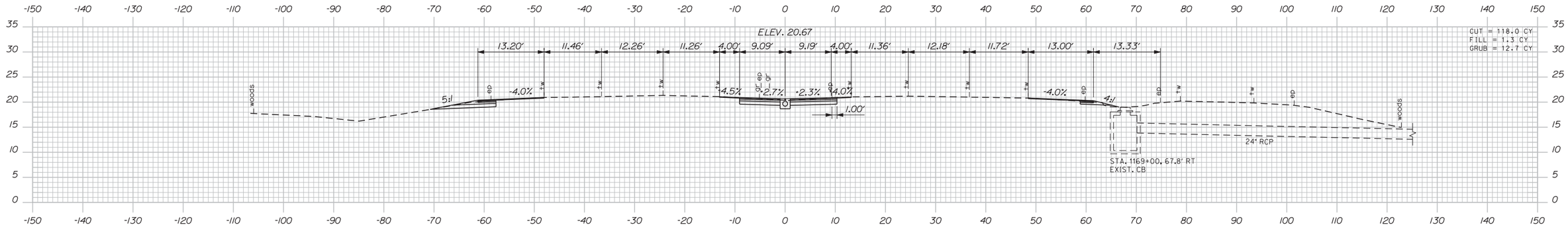

1169+00.00

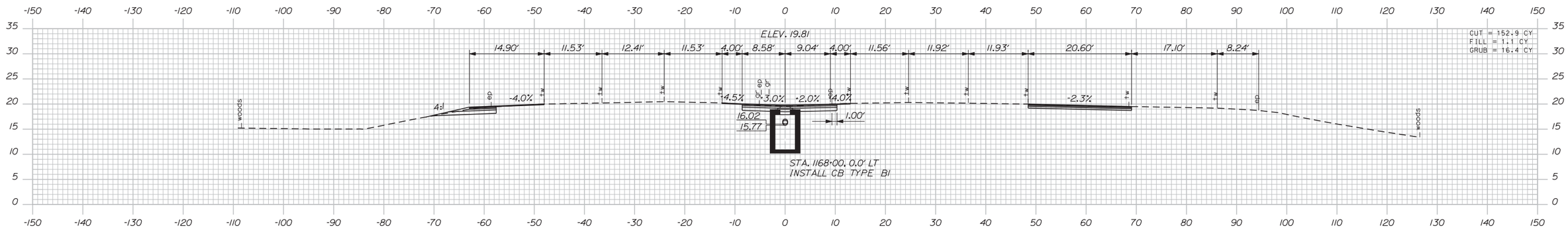

1168+00.00

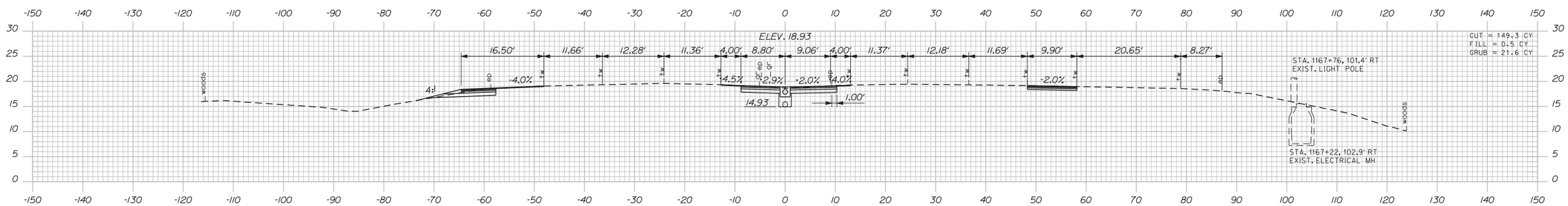

1167+00.00

NOTE:

THE TRAVEL WAY DIMENSIONS ON THE CROSS SECTIONS ARE TAKEN FROM THE SURVEY. THE INTENT OF THE PERMANENT PAVEMENT MARKING IS TO REPLICATE THEM IN EXISTING LOCATIONS. THEREFORE, THE VARYING DIMENSIONS HAVE BEEN SHOWN FOR REFERENCE PURPOSES.

Date:1/23/2014

Filename: ...\cad\te\planset\035_XSect.dgn

Scale: As Noted

No.	Revision	By	Date

Designed by:

VHB Vanasse Hangen Brustlin, Inc.

CONSULTANT PROJECT MANAGER: T. BRYANT

	By	Date		By	Date
Designed	KDP	1/14	Checked	PAC	1/14
Drawn	KDP	1/14	In Charge of	TSB	1/14

VANASSE HANGEN BRUSTLIN, INC.
500 Southborough Dr.
Suite 105B
South Portland, ME 04106
TEL (207) 889-3150
FAX (207) 253-5596

MAINE TURNPIKE

THE GOLD STAR MEMORIAL HIGHWAY

MTA PROJECT MANAGER: Ralph C. Norwood IV, P.E.

BRIDGE REHABILITATION
YORK RIVER BRIDGES

MAINTENANCE OF TRAFFIC CROSS SECTIONS

CONTRACT: 2014.05

SHEET NUMBER:
42 OF 103

Sta. 1167+00.00 to Sta. 1169+00.00

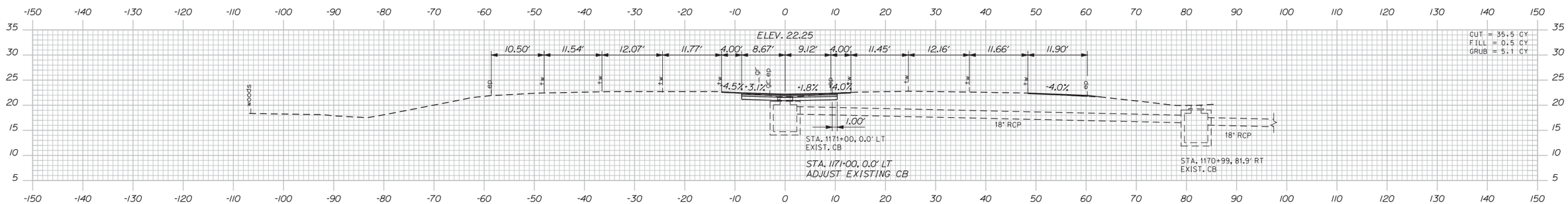

1171+00.00

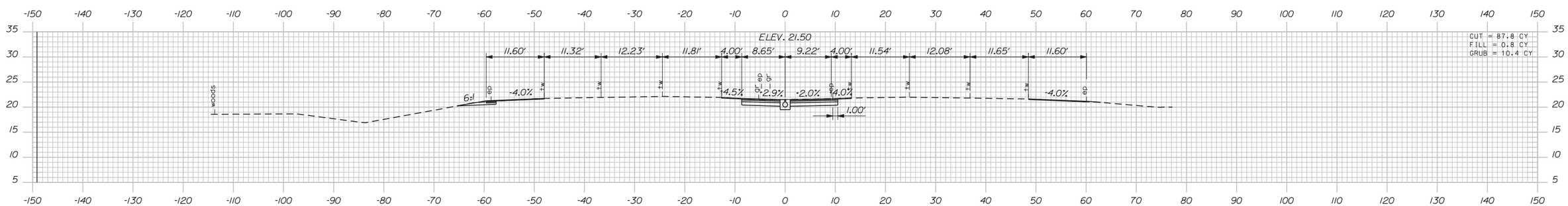

1170+00.00

NOTE:

THE TRAVEL WAY DIMENSIONS ON THE CROSS SECTIONS ARE TAKEN FROM THE SURVEY. THE INTENT OF THE PERMANENT PAVEMENT MARKING IS TO REPLICATE THEM IN EXISTING LOCATIONS. THEREFORE, THE VARYING DIMENSIONS HAVE BEEN SHOWN FOR REFERENCE PURPOSES.

Scale: As Noted

No.	Revision	By	Date

Designed by:

VHB Vanasse Hangen Brustlin, Inc.

CONSULTANT PROJECT MANAGER: T. BRYANT

	By	Date		By	Date
Designed	KDP	1/14	Checked	PAC	1/14
Drawn	KDP	1/14	In Charge of	TSB	1/14

VANASSE HANGEN BRUSTLIN, INC.
500 Southborough Dr.
Suite 105B
South Portland, ME 04106
TEL (207) 889-3150
FAX (207) 253-5596

MAINE TURNPIKE

THE GOLD STAR MEMORIAL HIGHWAY

MTA PROJECT MANAGER: Ralph C. Norwood IV, P.E.

BRIDGE REHABILITATION
YORK RIVER BRIDGES

MAINTENANCE OF TRAFFIC CROSS SECTIONS

SHEET NUMBER:
43 OF 103

CONTRACT: 2014.05

Sta. 1170+00.00 to Sta. 1171+00.00

Date:1/23/2014

Filename: ...\cad\te\planset\035_XSect.dgn

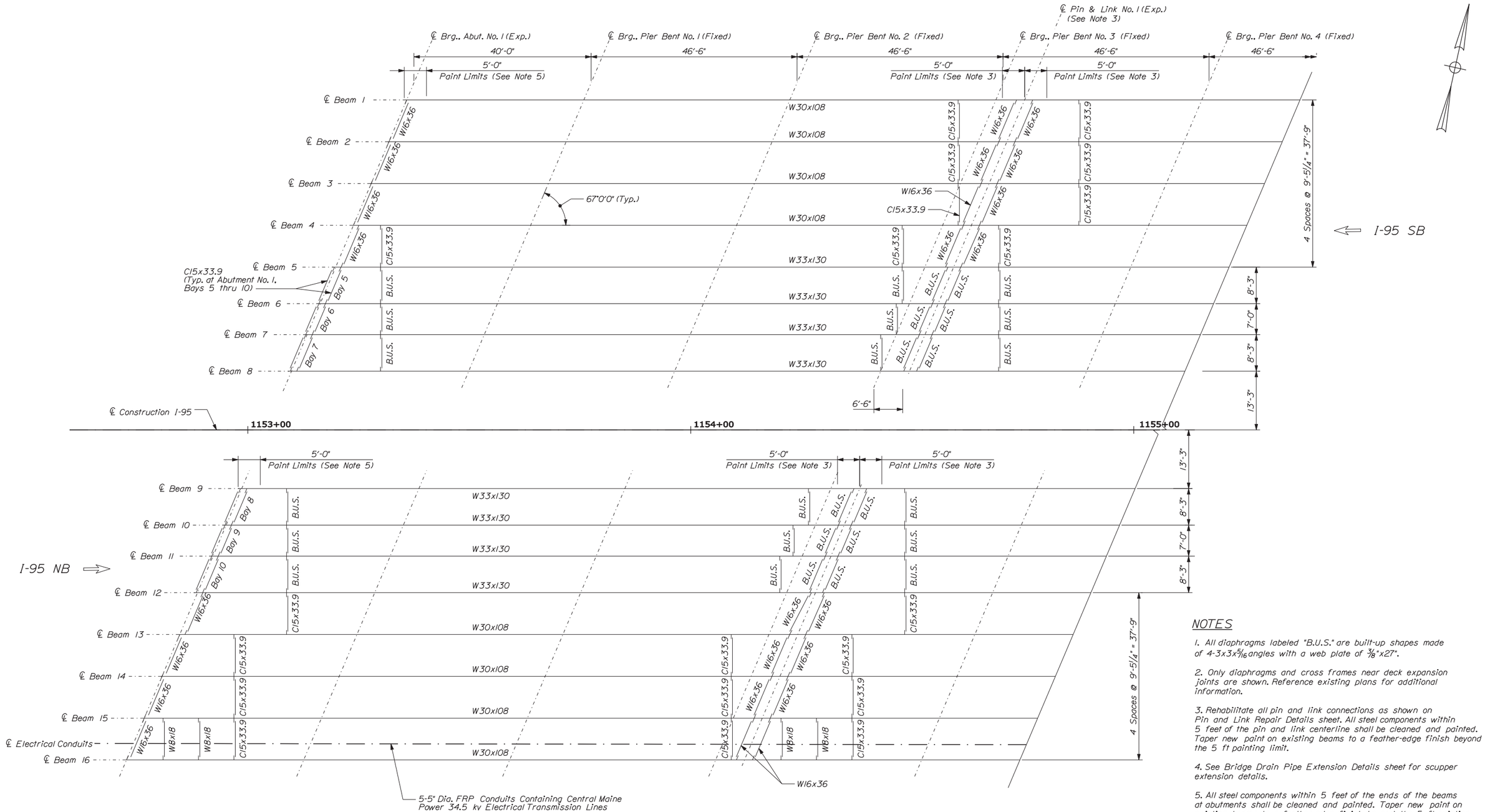

NOTES

1. All diaphragms labeled "B.U.S." are built-up shapes made of 4-3x3x5/16 angles with a web plate of 3/8"x27".

2. Only diaphragms and cross frames near deck expansion joints are shown. Reference existing plans for additional information.

3. Rehabilitate all pin and link connections as shown on Pin and Link Repair Details sheet. All steel components within 5 feet of the pin and link centerline shall be cleaned and painted. Taper new paint on existing beams to a feather-edge finish beyond the 5 ft painting limit.

4. See Bridge Drain Pipe Extension Details sheet for scupper extension details.

5. All steel components within 5 feet of the ends of the beams at abutments shall be cleaned and painted. Taper new paint on existing beams to a feather-edge finish beyond the 5 ft painting limit.

Date: 1/23/2014

Filename: ...\st\planset\044_framing_01.dgn

Scale: 3/32" = 1'-0"

No.	Revision	By	Date

Designed by:

VHB Vanasse Hangen Brustlin, Inc.

CONSULTANT PROJECT MANAGER: T. BRYANT

	By	Date		By	Date
Designed	RSB	1/14	Checked	KJG	1/14
Drawn	CLC	1/14	In Charge of	TSB	1/14

VANASSE HANGEN BRUSTLIN, INC.
500 Southborough Dr.
Suite 105B
South Portland, ME 04106
TEL (207) 889-3150
FAX (207) 253-5596

MAINE TURNPIKE

THE GOLD STAR MEMORIAL HIGHWAY

MTA PROJECT MANAGER: Ralph C. Norwood IV, P.E.

BRIDGE REHABILITATION
YORK RIVER BRIDGES

FRAMING PLAN (SHEET 1 OF 3)

CONTRACT: 2014.05

SHEET NUMBER:

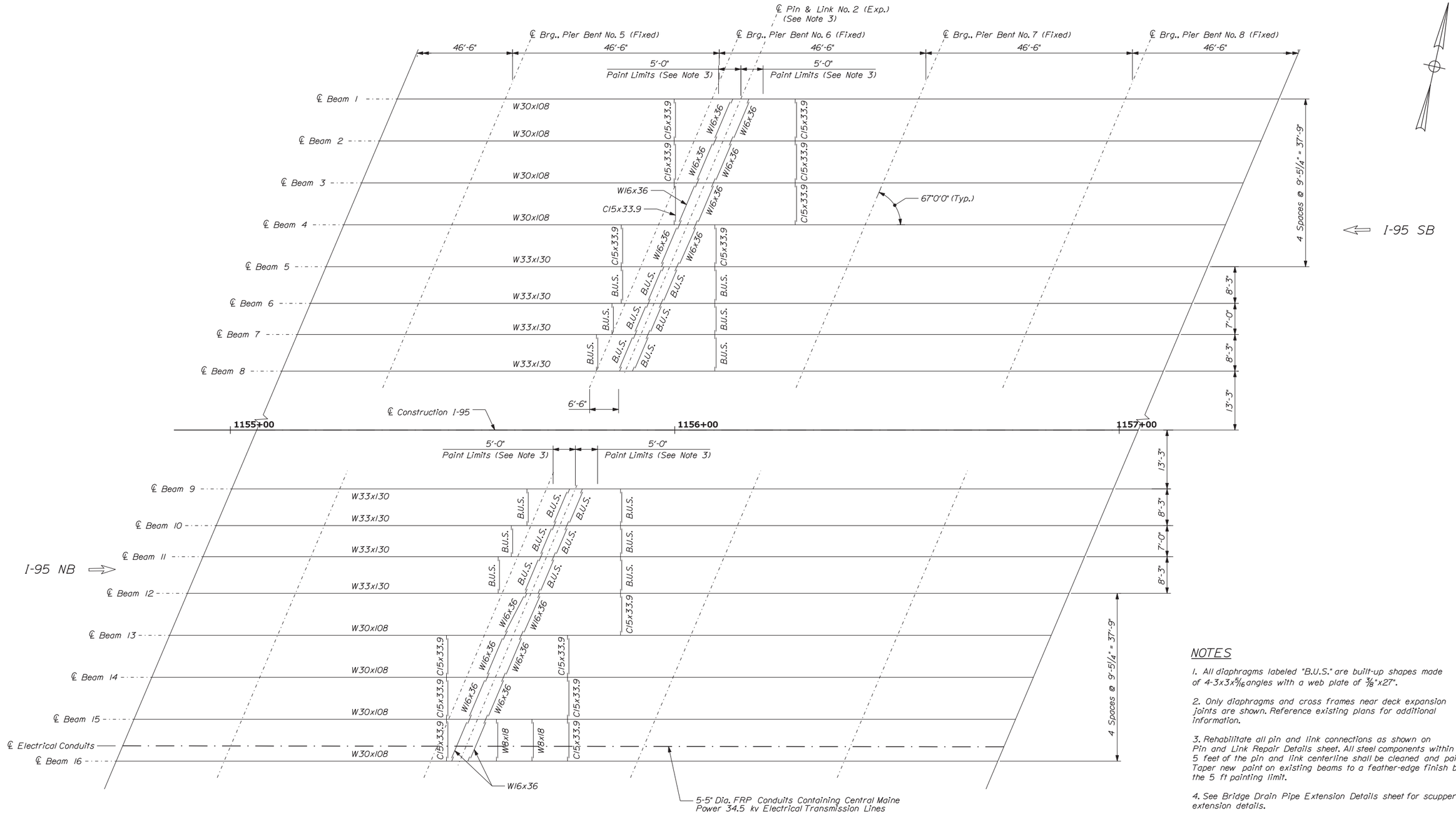

NOTES

1. All diaphragms labeled "B.U.S." are built-up shapes made of 4-3x3x5/16 angles with a web plate of 3/8"x27".

2. Only diaphragms and cross frames near deck expansion joints are shown. Reference existing plans for additional information.

3. Rehabilitate all pin and link connections as shown on Pin and Link Repair Details sheet. All steel components within 5 feet of the pin and link centerline shall be cleaned and painted. Taper new paint on existing beams to a feather-edge finish beyond the 5 ft painting limit.

4. See Bridge Drain Pipe Extension Details sheet for scupper extension details.

Scale: 3/32" = 1'-0"

No.	Revision	By	Date

Designed by:

VHB Vanasse Hangen Brustlin, Inc.

CONSULTANT PROJECT MANAGER: T. BRYANT

	By	Date		By	Date
Designed	RSB	1/14	Checked	KJG	1/14
Drawn	CLC	1/14	In Charge of	TSB	1/14

VANASSE HANGEN BRUSTLIN, INC.
500 Southborough Dr.
Suite 105B
South Portland, ME 04106
TEL (207) 889-3150
FAX (207) 253-5596

MAINE TURNPIKE

THE GOLD STAR MEMORIAL HIGHWAY

MTA PROJECT MANAGER: Ralph C. Norwood IV, P.E.

BRIDGE REHABILITATION
YORK RIVER BRIDGES

FRAMING PLAN (SHEET 2 OF 3)

SHEET NUMBER:

CONTRACT: 2014.05

Date: 1/23/2014
Filename: ...\st\planset\045_framing_02.dgn

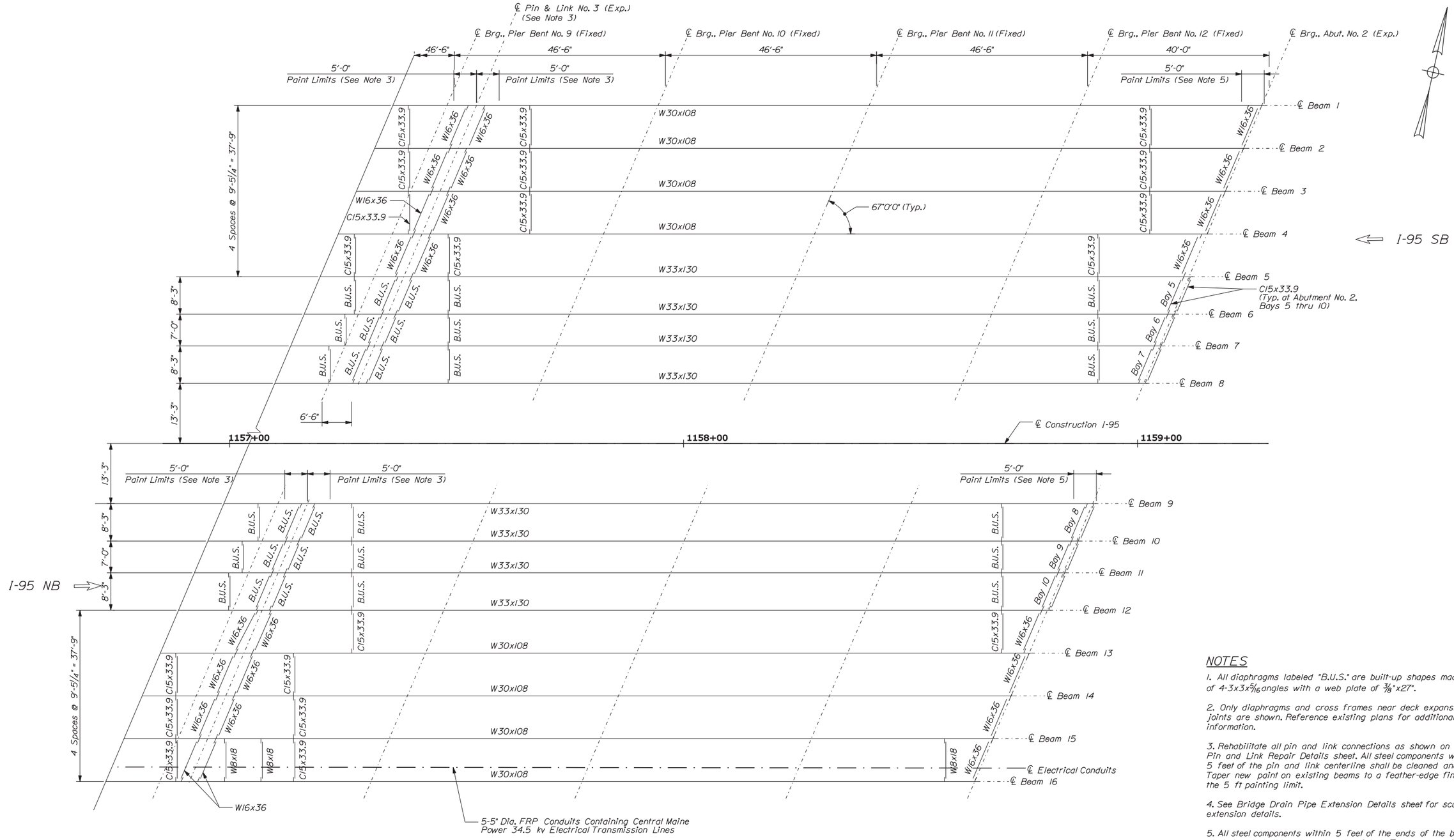

NOTES

1. All diaphragms labeled "B.U.S." are built-up shapes made of 4-3x3x5/16 angles with a web plate of 3/8"x27".

2. Only diaphragms and cross frames near deck expansion joints are shown. Reference existing plans for additional information.

3. Rehabilitate all pin and link connections as shown on Pin and Link Repair Details sheet. All steel components within 5 feet of the pin and link centerline shall be cleaned and painted. Taper new paint on existing beams to a feather-edge finish beyond the 5 ft painting limit.

4. See Bridge Drain Pipe Extension Details sheet for scupper extension details.

5. All steel components within 5 feet of the ends of the beams at abutment shall be cleaned and painted. Taper new paint on existing beams to a feather-edge finish beyond the 5 ft painting limit.

Scale: 3/32" = 1'-0"

No.	Revision	By	Date

Designed by:

Vanasse Hangen Brustlin, Inc.

CONSULTANT PROJECT MANAGER: T. BRYANT

	By	Date		By	Date
Designed	RSB	1/14	Checked	KJG	1/14
Drawn	CLC	1/14	In Charge of	TSB	1/14

VANASSE HANGEN BRUSTLIN, INC.
500 Southborough Dr.
Suite 105B
South Portland, ME 04106
TEL (207) 889-3150
FAX (207) 253-5596

MAINE TURNPIKE

THE GOLD STAR MEMORIAL HIGHWAY

MTA PROJECT MANAGER: Ralph C. Norwood IV, P.E.

BRIDGE REHABILITATION
YORK RIVER BRIDGES

FRAMING PLAN (SHEET 3 OF 3)

CONTRACT: 2014.05

SHEET NUMBER:
46 OF 103

Date:1/23/2014

Filename: ...\st\planset\046_framing_03.dgn

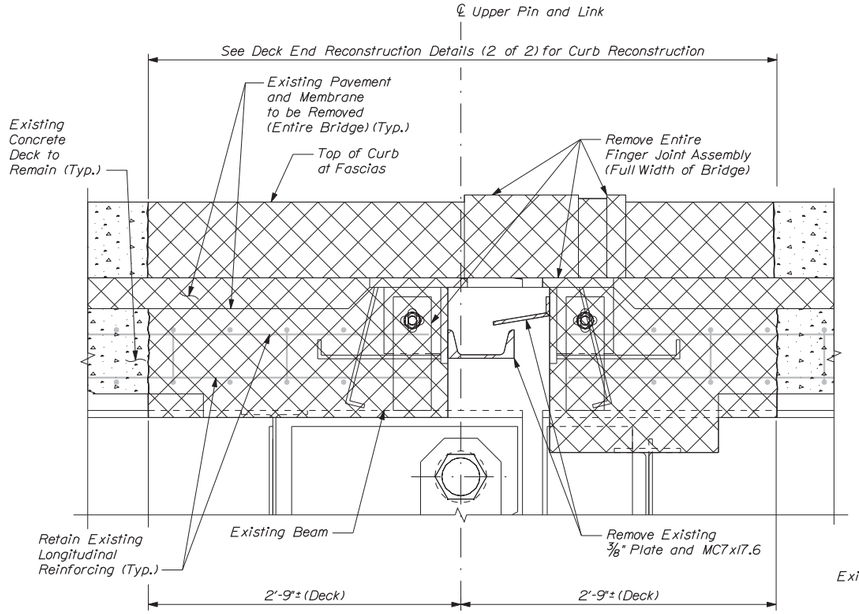

VIEW AT PIN AND LINK LOCATIONS
(3 NB and 3 SB)

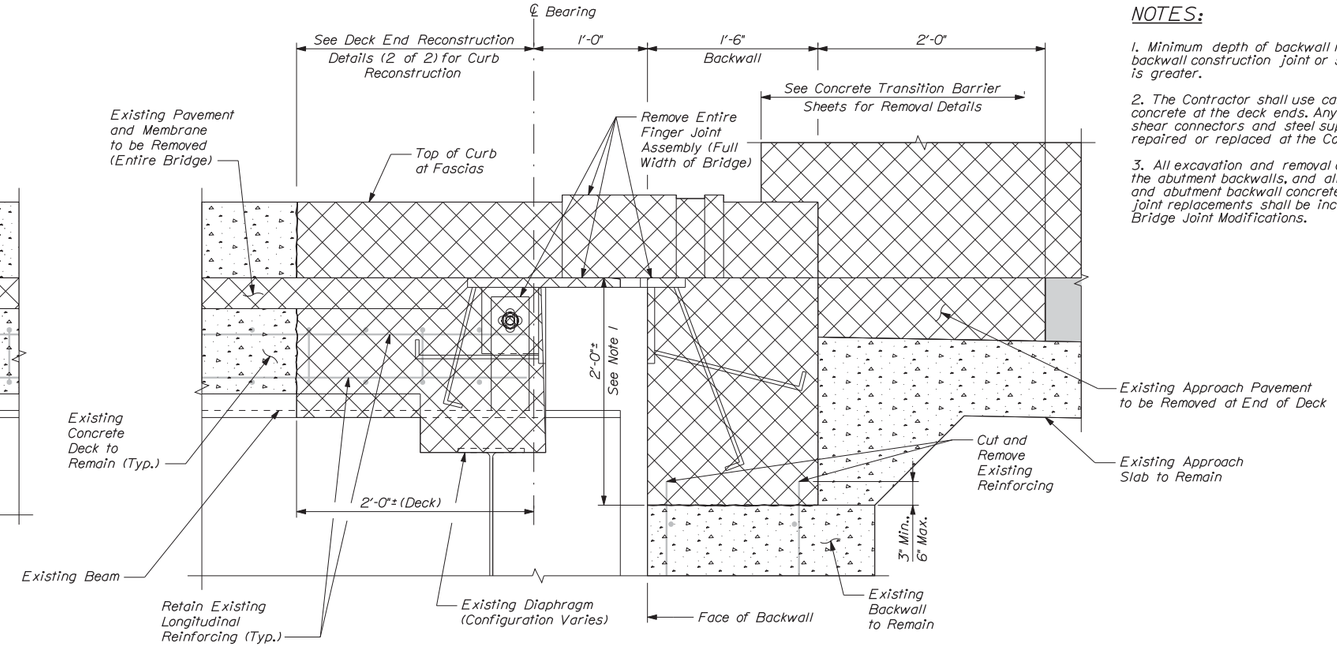

VIEW AT ABUTMENTS
(2 NB and 2 SB)

NOTES:

1. Minimum depth of backwall reconstruction shall be to backwall construction joint or solid concrete, whichever is greater.

2. The Contractor shall use care when removing the concrete at the deck ends. Any damage to the existing shear connectors and steel superstructure shall be repaired or replaced at the Contractor's expense.

3. All excavation and removal of existing pavement behind the abutment backwalls, and all removal of existing deck and abutment backwall concrete required for the expansion joint replacements shall be incidental to Item 520.2215, Bridge Joint Modifications.

REMOVAL DETAIL AT DECK ENDS

(Dimensions at Abutments are Perpendicular to Backwall and Along Girder at Pin and Link Locations)
Not to Scale

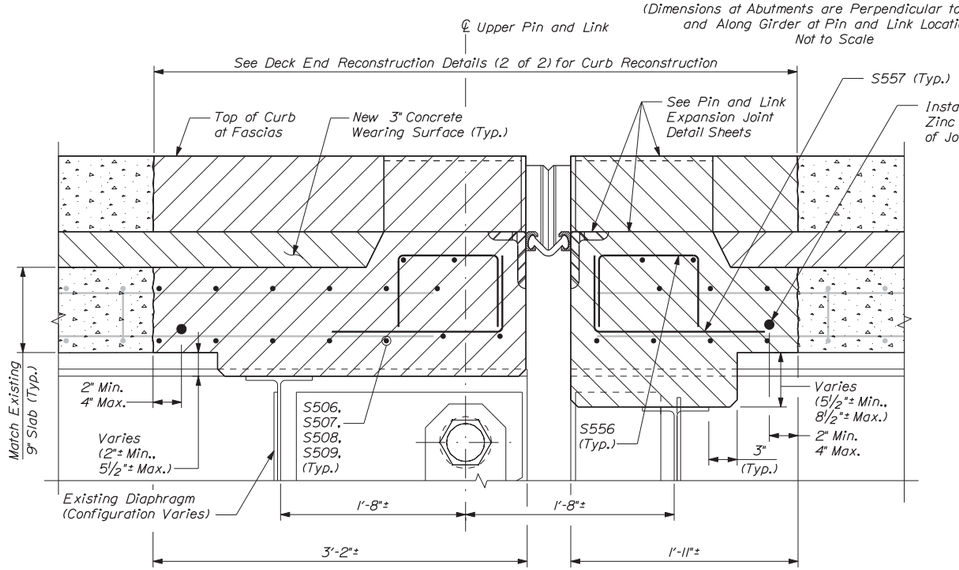

VIEW AT PIN AND LINK LOCATIONS
(3 NB and 3 SB)

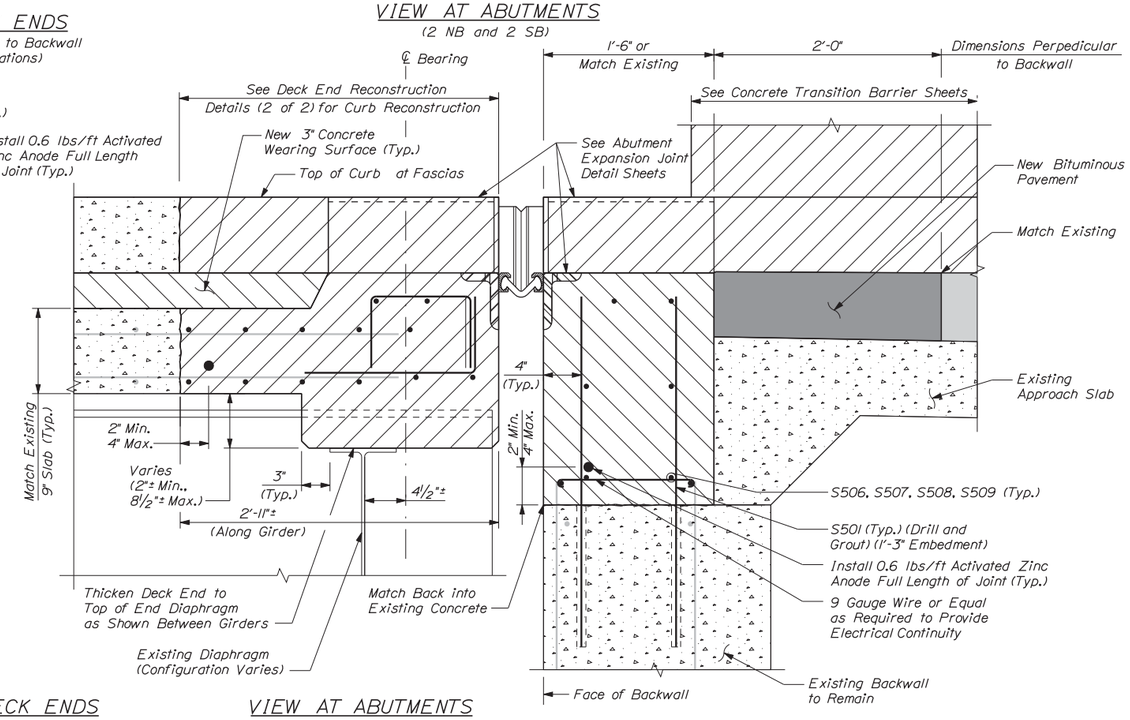

VIEW AT ABUTMENTS
(2 NB and 2 SB)

LEGEND

- = Concrete Removal
- = Existing Concrete
- = Existing Bituminous Pavement
- = New Concrete
- = New Bituminous Pavement

RECONSTRUCTION DETAIL AT DECK ENDS
Not to Scale

Date: 1/23/2014

Filename: ...\st\planset\047joint_dt_01.dgn

Scale: As Noted

No.	Revision	By	Date

Designed by:

VHB Vanasse Hangen Brustlin, Inc.

CONSULTANT PROJECT MANAGER: T. BRYANT

	By	Date		By	Date
Designed	SMH	1/14	Checked	JAW	1/14
Drawn	CLC	1/14	In Charge of	TSB	1/14

VANASSE HANGEN BRUSTLIN, INC.
500 Southborough Dr.
Suite 105B
South Portland, ME 04106
TEL (207) 889-3150
FAX (207) 253-5596

MAINE TURNPIKE

THE GOLD STAR MEMORIAL HIGHWAY

MTA PROJECT MANAGER: Ralph C. Norwood IV, P.E.

BRIDGE REHABILITATION
YORK RIVER BRIDGES

DECK END RECONSTRUCTION DETAILS (1 OF 2)

SHEET NUMBER:

CONTRACT: 2014.05

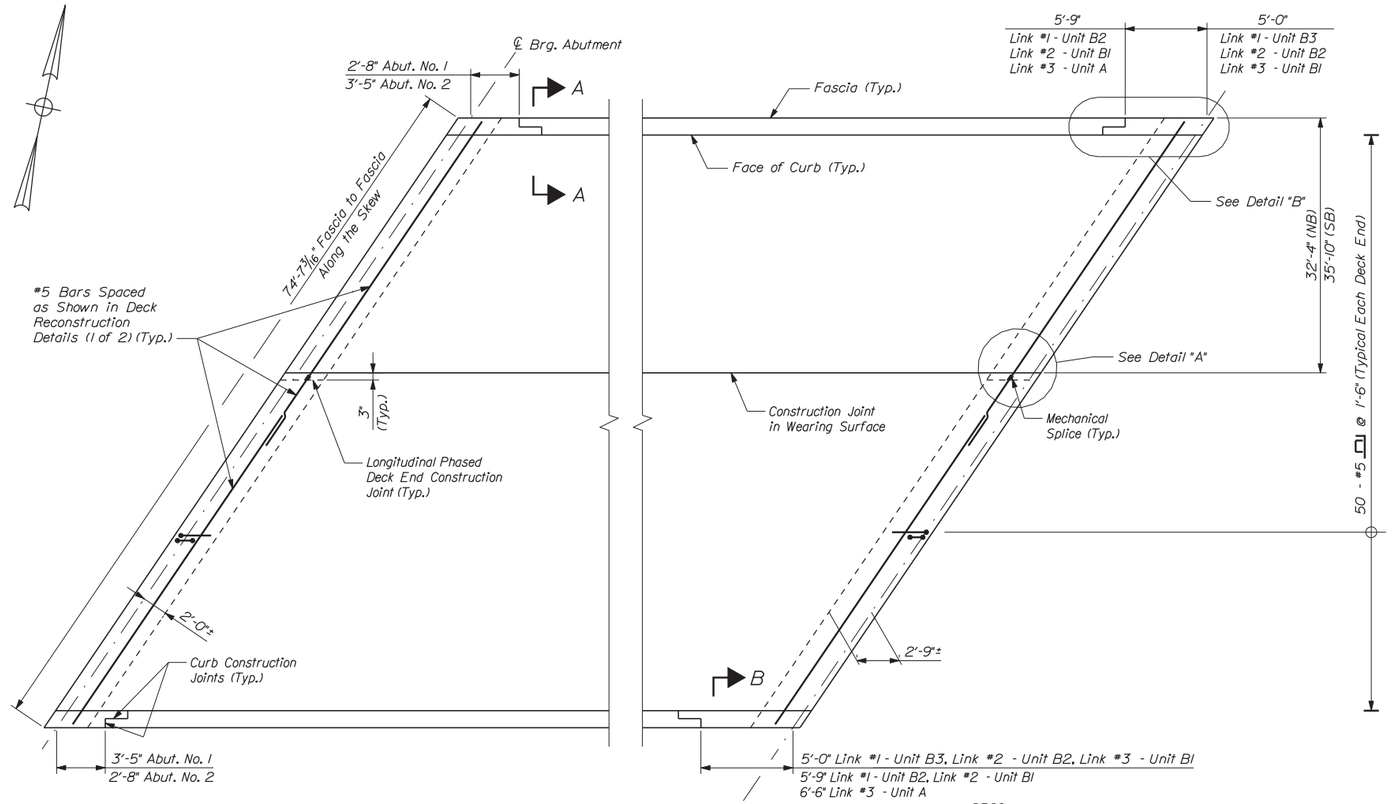

PARTIAL DECK PLAN (NB & SB)
(Deck Unit B3 Shown, Other Units Similar)
Not to Scale

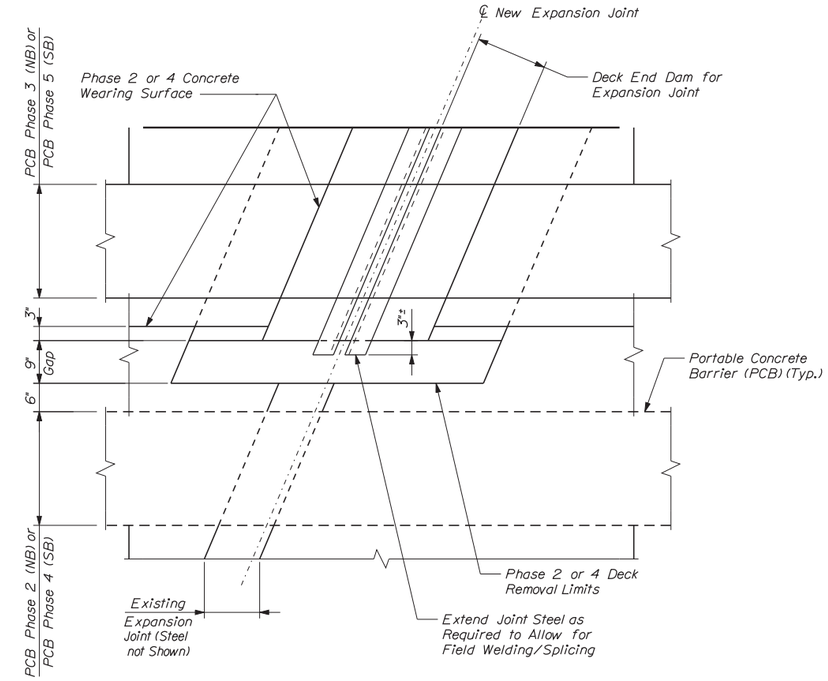

DETAIL A - PHASED CONSTRUCTION JOINTS
(Pin and Link Location Shown, Abutments Similar)
Not to Scale

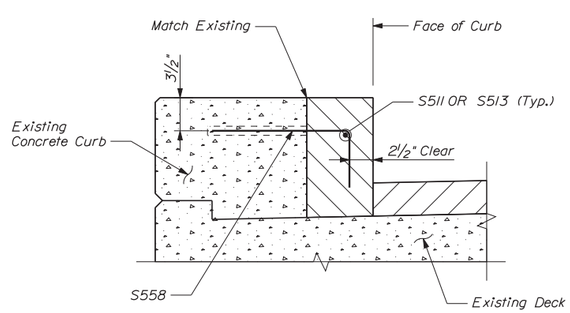

SECTION A-A
(Rail Posts not Shown)
Scale: 1 1/2" = 1'-0"

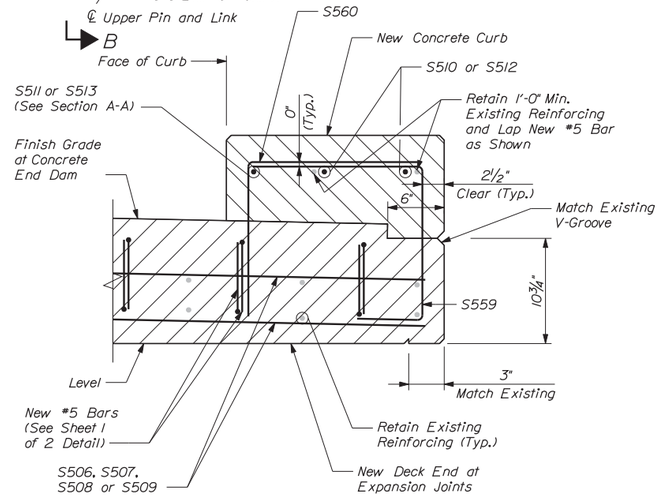

SECTION B-B
(Expansion Joint Armor not Shown)
Scale: 1 1/2" = 1'-0"

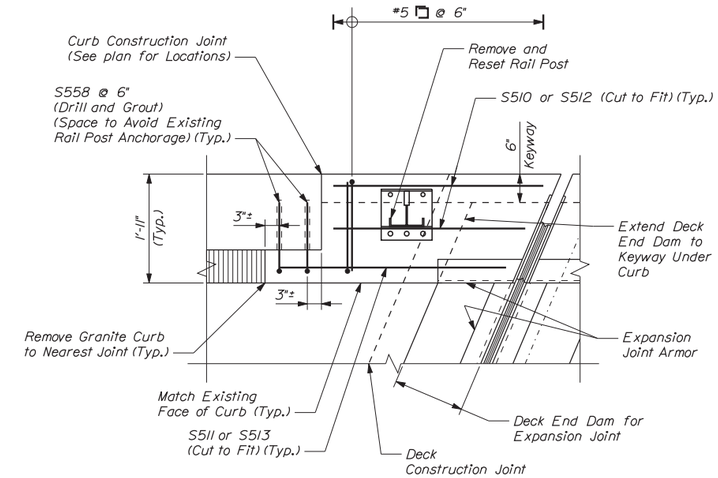

DETAIL B
(Pin and Link Location Shown, Abutments Similar)
Scale: 3/4" = 1'-0"

Date:1/23/2014

Filename: ...\st\planset\048_joint_dt_02.dgn

Scale: As Noted

No.	Revision	By	Date

Designed by:

VHB Vanasse Hangen Brustlin, Inc.

CONSULTANT PROJECT MANAGER: T. BRYANT

	By	Date		By	Date
Designed	SMH	1/14	Checked	JAW	1/14
Drawn	CLC	1/14	In Charge of	TSB	1/14

VANASSE HANGEN BRUSTLIN, INC.
500 Southborough Dr.
Suite 105B
South Portland, ME 04106
TEL (207) 889-3150
FAX (207) 253-5596

MAINE TURNPIKE

THE GOLD STAR MEMORIAL HIGHWAY

MTA PROJECT MANAGER: Ralph C. Norwood IV, P.E.

BRIDGE REHABILITATION
YORK RIVER BRIDGES

DECK END RECONSTRUCTION DETAILS (2 OF 2)

SHEET NUMBER:

CONTRACT: 2014.05

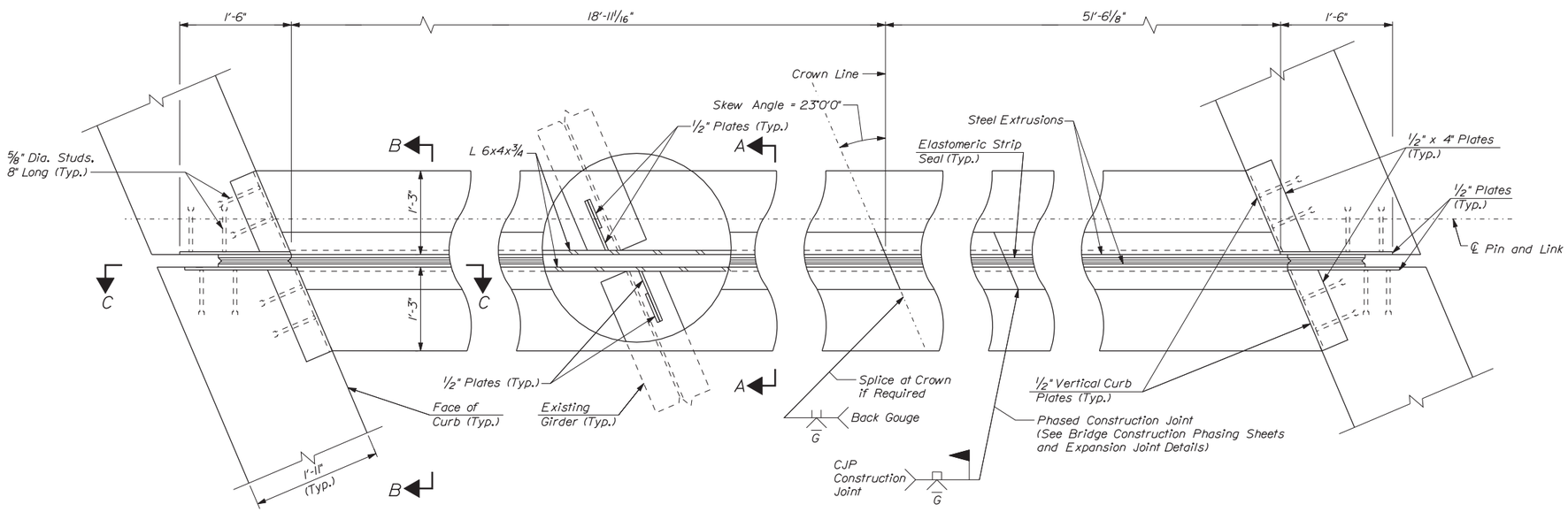

PLAN VIEW
(3 NB & 3 SB)
(Rail Posts and Deck or Curb Construction Joints not Shown)
Not to Scale

EXPANSION JOINT NOTES:

1. Expansion joint steel shall be galvanized AASHTO M270 Grade 50 (ASTM A709 Grade 50), except as otherwise allowed. The entire assembly, including elastomeric seal, shall be paid for as Item 520.21, Expansion Device - Gland Seal.
2. Splices for expansion joint steel shall develop full strength.
3. The expansion joint at pin and link locations shall be preset to the anticipated temperature at the time of installation. Final setting in the field shall be determined by the Resident (see Temperature Adjustment Table).
4. Elastomeric strip seal shall be furnished in one continuous length. No splices will be allowed. If bridge is subject to traffic prior to strip seal installation, extrusions shall be filled with backer rod.
5. Joint support plates shall be shop welded to the expansion joint steel and shall be vertical after the joint assembly has been adjusted for roadway cross-slope and grade.
6. Immediately after the joint has been secured to the structural steel and backwall, remove shipping devices and grind smooth any welds on exposed surfaces. repair any damage to exposed painted surfaces with zinc-rich primer.
7. Protect top of expansion joint during placement of concrete and bituminous pavement.
8. The elastomeric strip seal shall have a minimum range of movement of 4 inches. Strip seal shall be D.S. Brown A2R-400 or Watson Bowman Acme SE-400.
9. No "low profile" steel extrusions shall be allowed.
10. See Deck End Reconstruction Detail Sheets for additional details and reinforcing.
11. Concrete under angle armor and curb armor shall be hand packed to ensure proper consolidation.

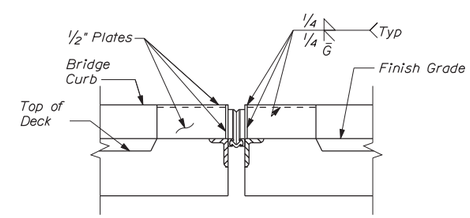

VIEW B-B
Not To Scale

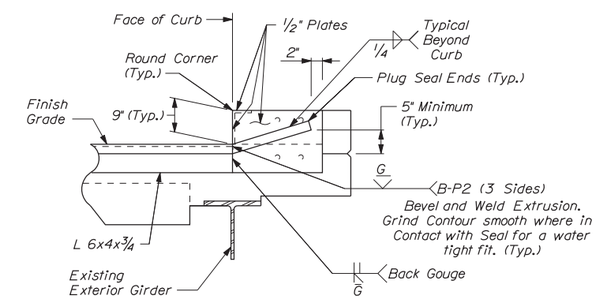

SECTION C-C
Not To Scale

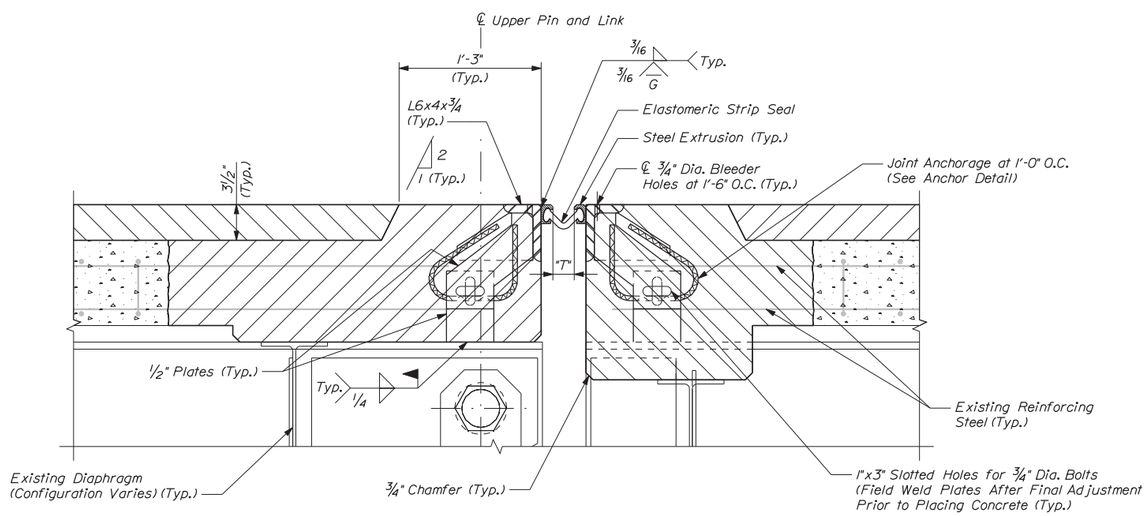

SECTION A-A
(New Deck Reinforcing not Shown for Clarity)
Not to Scale

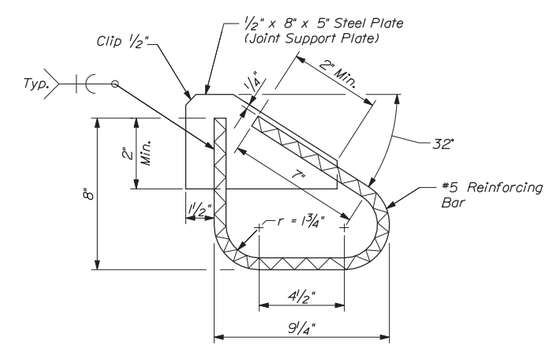

ANCHOR DETAIL
Scale: 3" = 1'-0"

Temperature Adjustment Table	
Temperature	"T"
30°F	2 11/16"
45°F	2 1/2"
60°F	2 5/16"
75°F	2 3/16"
90°F	2"

"T" dimensions are perpendicular to deck end

Date: 1/23/2014

Filename: ...\st\planset\049_joint_dt_03.dgn

Scale: As Noted

No.	Revision	By	Date

Designed by:

VHB Vanasse Hangen Brustlin, Inc.

CONSULTANT PROJECT MANAGER: T. BRYANT

	By	Date		By	Date
Designed	SMH	1/14	Checked	JAW	1/14
Drawn	CLC	1/14	In Charge of	TSB	1/14

VANASSE HANGEN BRUSTLIN, INC.
500 Southborough Dr.
Suite 105B
South Portland, ME 04106
TEL (207) 889-3150
FAX (207) 253-5596

MAINE TURNPIKE

THE GOLD STAR MEMORIAL HIGHWAY

MTA PROJECT MANAGER: Ralph C. Norwood IV, P.E.

BRIDGE REHABILITATION
YORK RIVER BRIDGES

PIN AND LINK
EXPANSION JOINT DETAILS

SHEET NUMBER:

CONTRACT: 2014.05

NOTES:

1. See Pin and Link Expansion Joint Details Sheet for Expansion Joint Notes, Anchor Detail and additional information.
2. The abutment expansion joint shall be preset to the opening shown. No adjustment is necessary if installed between 30°F and 90°F.

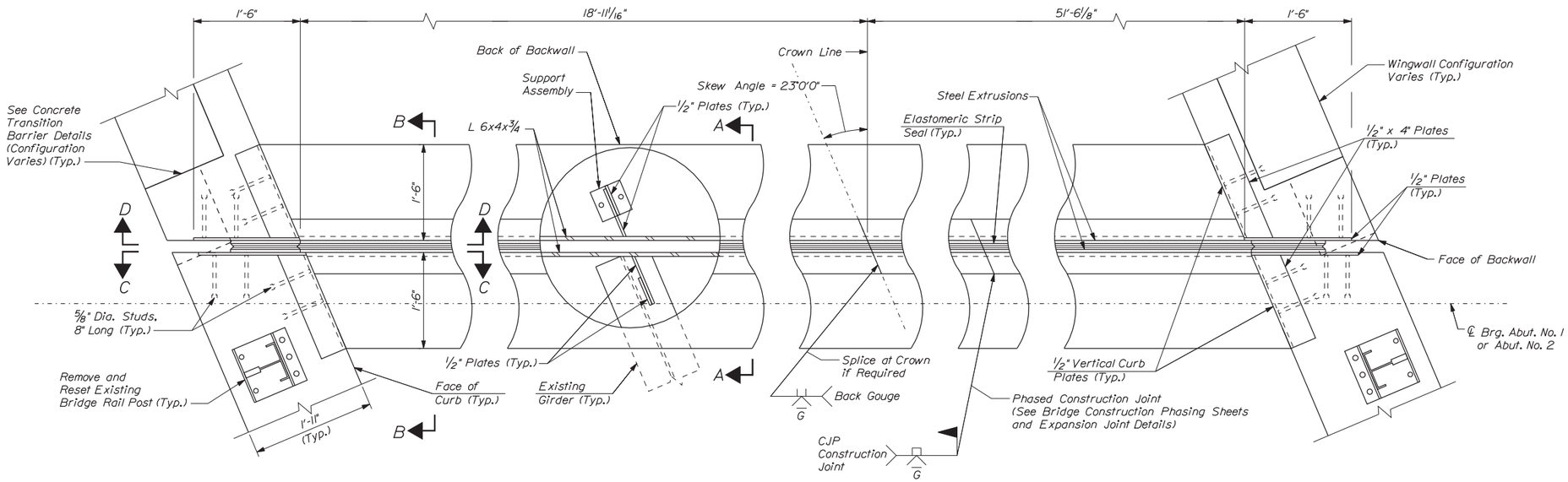

PLAN VIEW
(2 NB & 2 SB)
(Deck or Curb Construction Joint not Shown)
Not to Scale

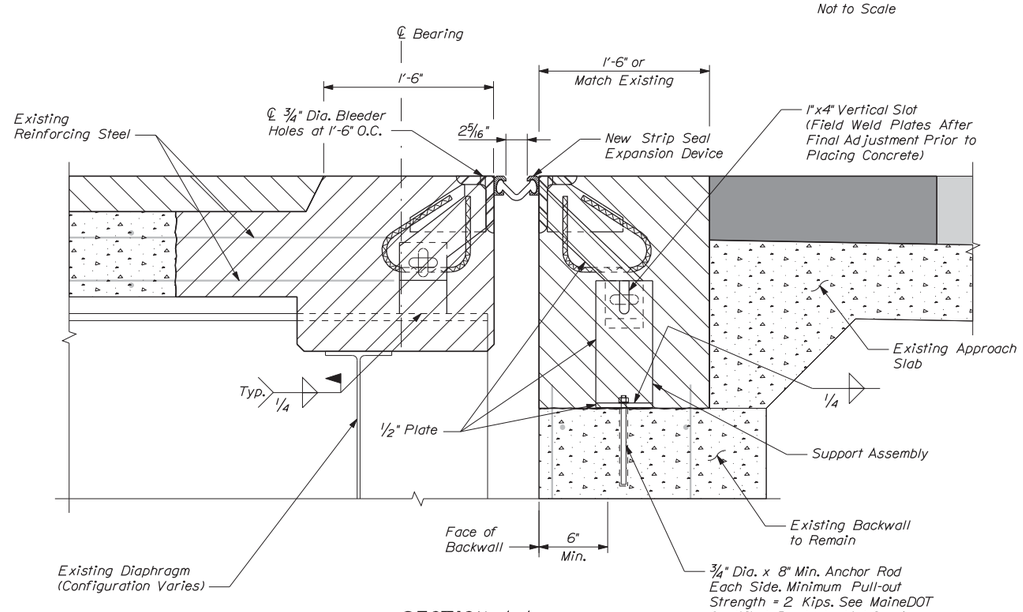

SECTION A-A
(New Reinforcing Steel not Shown for Clarity)
Not to Scale

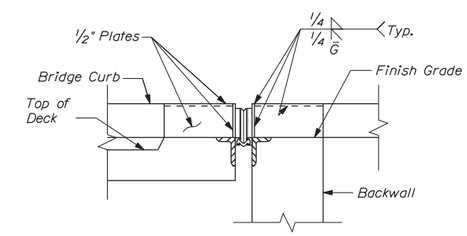

VIEW B-B
Not To Scale

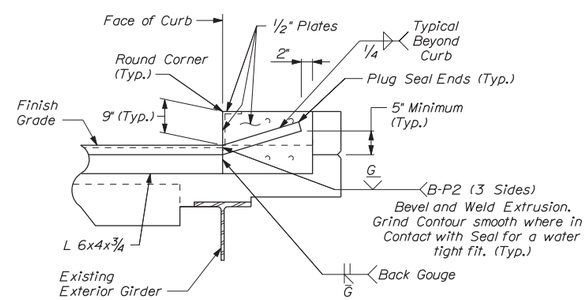

SECTION C-C
Not To Scale

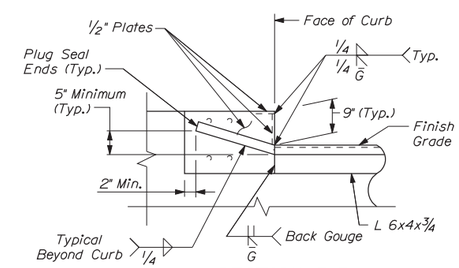

SECTION D-D
Not To Scale

Date: 1/23/2014

Filename: ...\st\planset\050_joint_dt_04.dgn

No.	Revision	By	Date

Scale: As Noted

Designed by:

VHB Vanasse Hangen Brustlin, Inc.

CONSULTANT PROJECT MANAGER: T. BRYANT

	By	Date		By	Date
Designed	SMH	1/14	Checked	JAW	1/14
Drawn	CLC	1/14	In Charge of	TSB	1/14

VANASSE HANGEN BRUSTLIN, INC.
500 Southborough Dr.
Suite 105B
South Portland, ME 04106
TEL (207) 889-3150
FAX (207) 253-5596

MAINE TURNPIKE

THE GOLD STAR MEMORIAL HIGHWAY

MTA PROJECT MANAGER: Ralph C. Norwood IV, P.E.

BRIDGE REHABILITATION
YORK RIVER BRIDGES

ABUTMENT
EXPANSION JOINT DETAILS

SHEET NUMBER:

CONTRACT: 2014.05

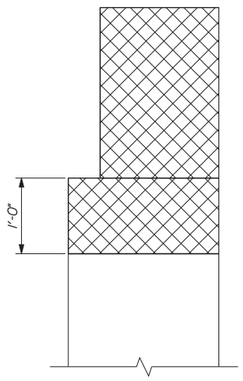

SECTION A-A
Scale: 1" = 1'-0"
(SB Bridge, Northeast Wingwall Shown)

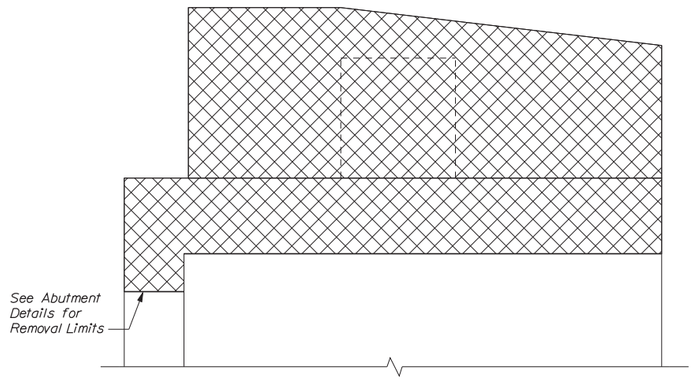

CONCRETE TRANSITION BARRIER ELEVATION - TYPE A
Scale: 1" = 1'-0"
(SB Bridge, Northeast Wingwall Shown)

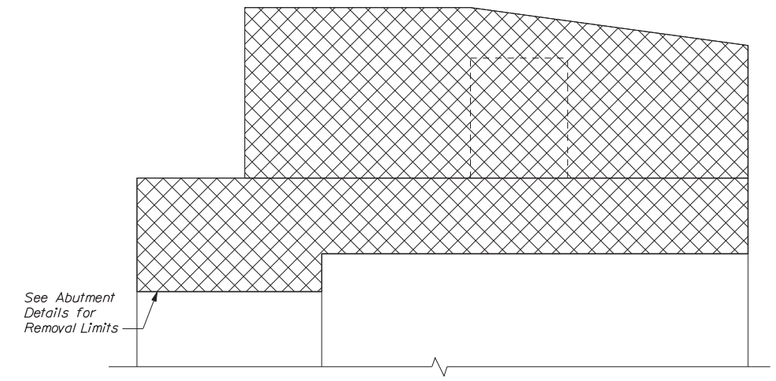

CONCRETE TRANSITION BARRIER ELEVATION - TYPE B
Scale: 1" = 1'-0"
(SB Bridge, Southeast Wingwall Shown)

Limits of Concrete Removal

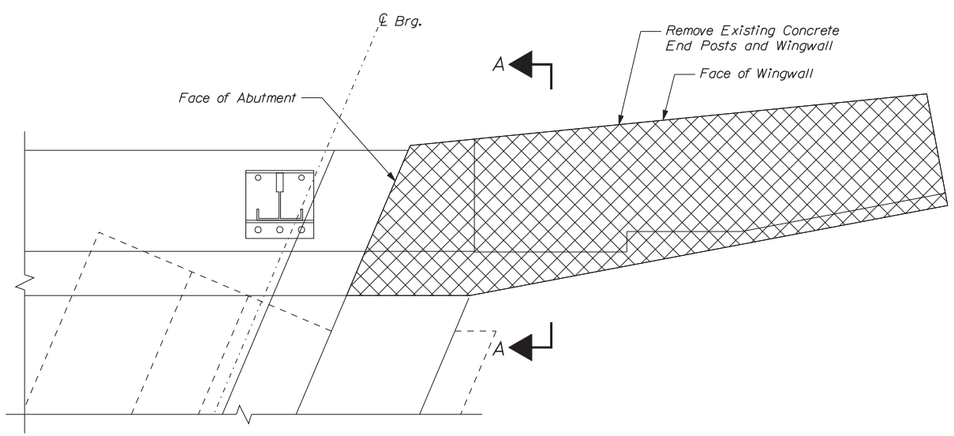

CONCRETE TRANSITION BARRIER PLAN - TYPE A
Scale: 1" = 1'-0"
(SB Bridge, Northeast Wingwall Shown)

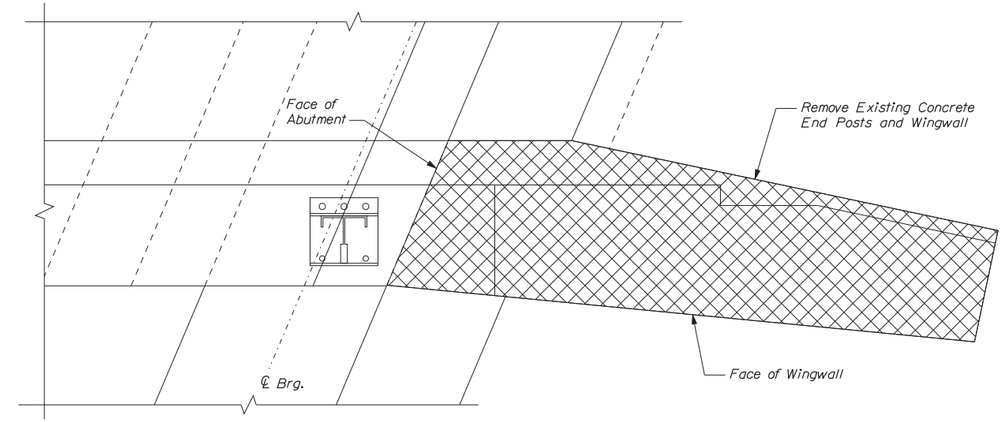

CONCRETE TRANSITION BARRIER PLAN - TYPE B
Scale: 1" = 1'-0"
(SB Bridge, Southeast Wingwall Shown)

NOTE

1. See Bridge Plan and Elevation for locations of Barrier Types A and B.

Date: 1/23/2014

Filename: ...\051_Conc_Trans_Barrier_01.dgn

Scale: As Noted

No.	Revision	By	Date

Designed by:

VHB Vanasse Hangen Brustlin, Inc.

CONSULTANT PROJECT MANAGER: T. BRYANT

	By	Date		By	Date
Designed	JAW	1/14	Checked	SMH	1/14
Drawn	BJM	1/14	In Charge of	TSB	1/14

VANASSE HANGEN BRUSTLIN, INC.
500 Southborough Dr.
Suite 105B
South Portland, ME 04106
TEL (207) 889-3150
FAX (207) 253-5596

MAINE TURNPIKE

THE GOLD STAR MEMORIAL HIGHWAY

MTA PROJECT MANAGER: Ralph C. Norwood IV, P.E.

BRIDGE REHABILITATION
YORK RIVER BRIDGES

CONCRETE TRANSITION BARRIER DETAILS
(1 OF 4)

SHEET NUMBER:

CONTRACT: 2014.05

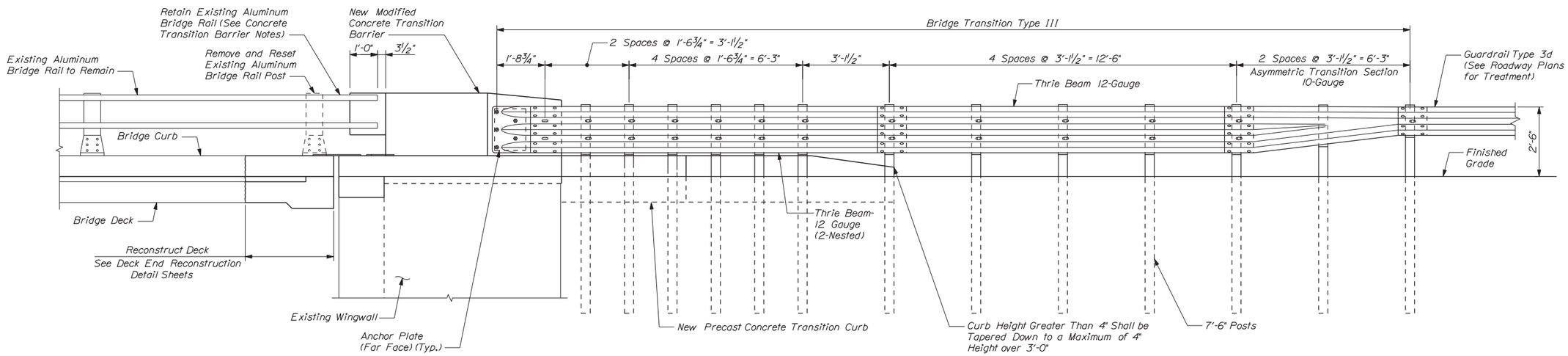

GUARDRAIL CONNECTION DETAIL - BRIDGE APPROACH END

Scale: 1/2" = 1'-0"
(SB Bridge, Northeast Corner Shown, All Others Similar)
(Roadway Subgrade and Approach Slab Not Shown for Clarity)

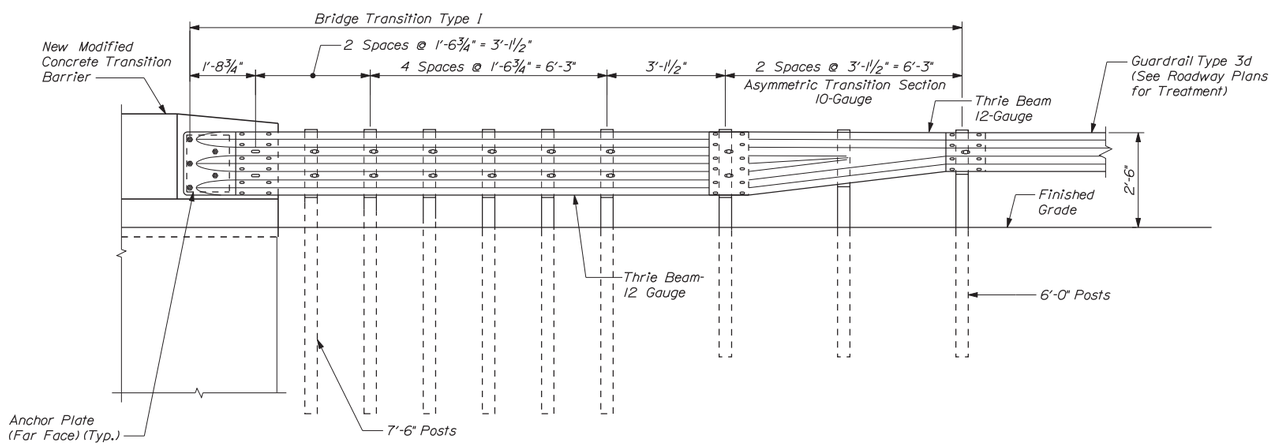

GUARDRAIL CONNECTION DETAIL - BRIDGE DEPARTURE END

Scale: 1/2" = 1'-0"
(NB Bridge, Northeast Corner Shown, All Others Similar)
(See Guardrail Connection Detail - Bridge Approach End for additional Information)

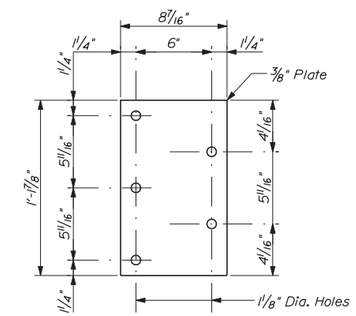

ANCHOR PLATE

(Far Face of all new Transition Connections - 8 Total)
Note to Scale

CONCRETE TRANSITION BARRIER NOTES

1. Refer to MaineDOT Standard Details Section 526 - Concrete Transitions Barrier for details and information not shown.

2. Reinforcing bar designation Type MTB refer to bars in the modified transition barrier. The reinforcing steel fabrication , delivery, anchoring and placement will be paid for as incidental to Item 526.342, Permanent Concrete Transition Barrier - Modified.

3. Anchor plates and threaded rods shall be galvanized in accordance with the Standard Specification and the MaineDOT Standard Details.

4. Excavation and backfill required for construction or modification of the concrete transition barrier shall be incidental to Item 526.342, Permanent Concrete Transition Barrier - Modified.

5. The proposed precast concrete transition curb shall be field cut as necessary to match tightly against the end of the wingwall. Payment for this effort will not be made directly, but shall be considered incidental to Item 526.342, Permanent Concrete Transition Barrier - Modified.

6. The Contractor shall field verify all dimensions prior to the fabrication of the reinforcing steel.

7. All bridge transition offset blocks shall be composite offset blocks.

8. The removal of the existing concrete and proposed concrete will be paid for a incidental to Item 526.342, Permanent Concrete Transition Barrier - Modified.

Scale: As Noted

No.	Revision	By	Date

Designed by:

VHB Vanasse Hangen Brustlin, Inc.

CONSULTANT PROJECT MANAGER: T. BRYANT

	By	Date		By	Date
Designed	RSB	1/14	Checked	KJG	1/14
Drawn	CLC	1/14	In Charge of	TSB	1/14

VANASSE HANGEN BRUSTLIN, INC.
500 Southborough Dr.
Suite 105B
South Portland, ME 04106
TEL (207) 889-3150
FAX (207) 253-5596

MAINE TURNPIKE

THE GOLD STAR MEMORIAL HIGHWAY

MTA PROJECT MANAGER: Ralph C. Norwood IV, P.E.

BRIDGE REHABILITATION
YORK RIVER BRIDGES

CONCRETE TRANSITION BARRIER DETAILS
(2 OF 4)

SHEET NUMBER:

CONTRACT: 2014.05

Date: 1/23/2014
Filename: ...\052_Conc_Trans_Barrier_02.dgn

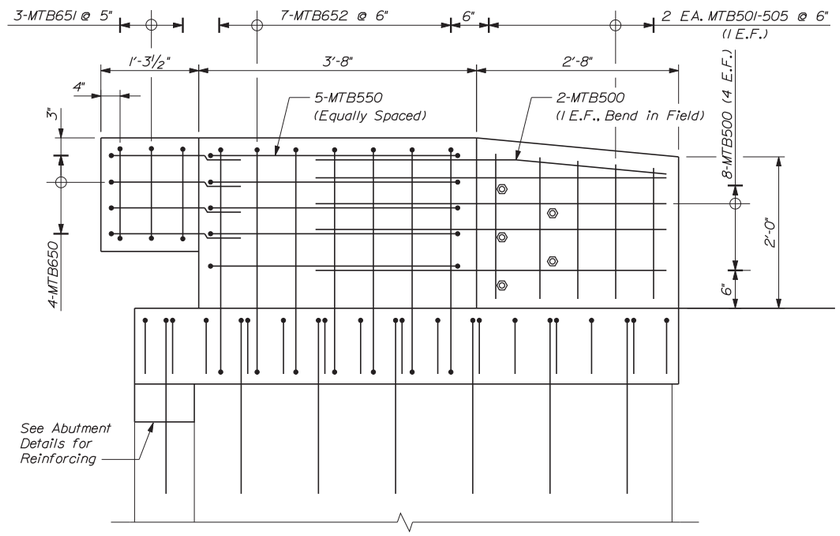

CONCRETE TRANSITION BARRIER ELEVATION - TYPE A
Scale: 1" = 1'-0"
(SB Bridge, Northeast Wingwall Shown)

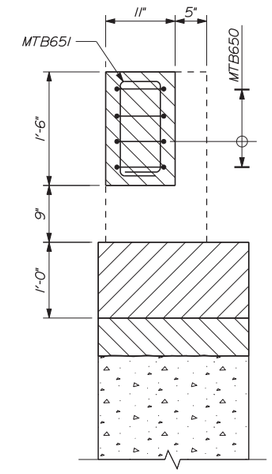

SECTION A-A
Scale: 1" = 1'-0"
(SB Bridge, Northeast Wingwall Shown)

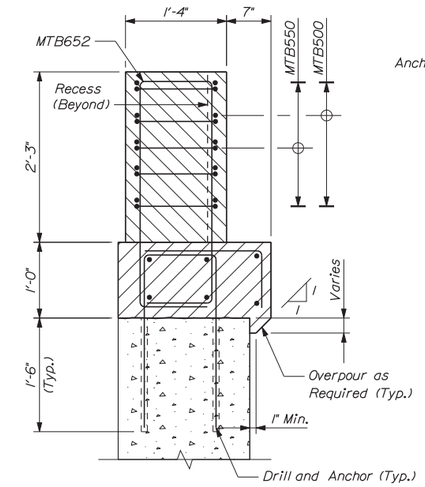

SECTION B-B
Scale: 1" = 1'-0"
(SB Bridge, Northeast Wingwall Shown)

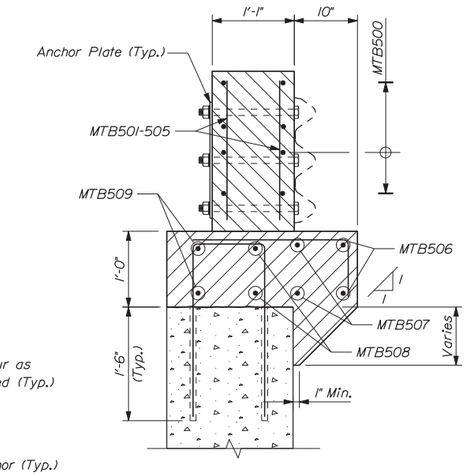

SECTION C-C
Scale: 1" = 1'-0"
(SB Bridge, Northeast Wingwall Shown)

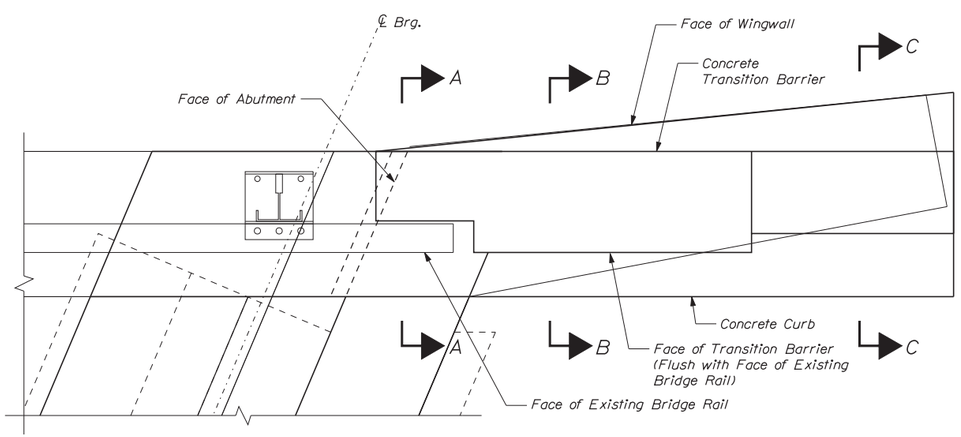

CONCRETE TRANSITION BARRIER PLAN - TYPE A
Scale: 1" = 1'-0"
(SB Bridge, Northeast Wingwall Shown)

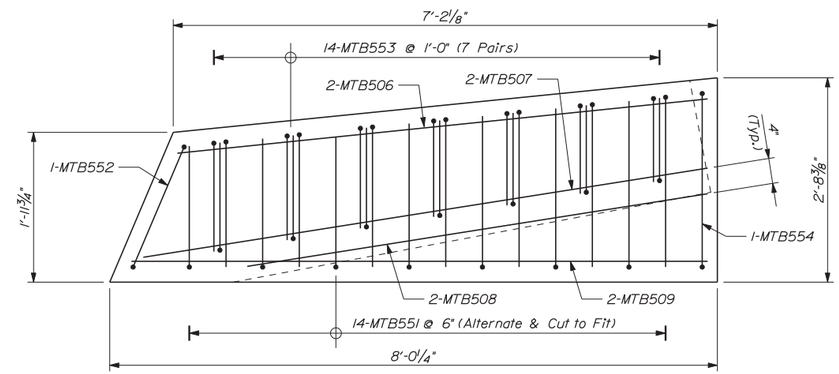

PLAN - CONCRETE CURB REINFORCEMENT - TYPE A
Not to Scale

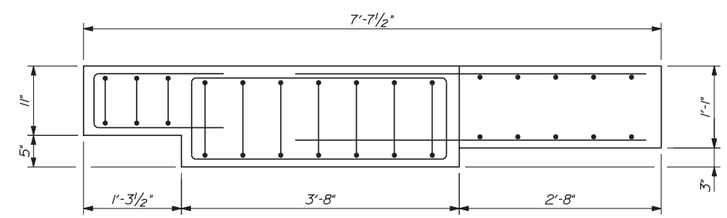

PLAN - CONCRETE TRANSITION BARRIER REINFORCEMENT - TYPE A & B
Not to Scale

NOTE
1. See Bridge Plan and Elevation for locations of Barrier Type A.

Date: 1/23/2014

Filename: ...\053_Conc_Trans_Barrier_03.dgn

No.	Revision	By	Date

Designed by:
Vanasse Hangen Brustlin, Inc.
CONSULTANT PROJECT MANAGER: T. BRYANT

	By	Date		By	Date
Designed	JAW	1/14	Checked	SMH	1/14
Drawn	BJM	1/14	In Charge of	TSB	1/14

VANASSE HANGEN BRUSTLIN, INC.
500 Southborough Dr.
Suite 105B
South Portland, ME 04106
TEL (207) 889-3150
FAX (207) 253-5596

MAINE TURNPIKE
THE GOLD STAR MEMORIAL HIGHWAY
MTA PROJECT MANAGER: Ralph C. Norwood IV, P.E.

BRIDGE REHABILITATION
YORK RIVER BRIDGES
CONCRETE TRANSITION BARRIER DETAILS
(3 OF 4)
SHEET NUMBER:
CONTRACT: 2014.05
53 OF 103

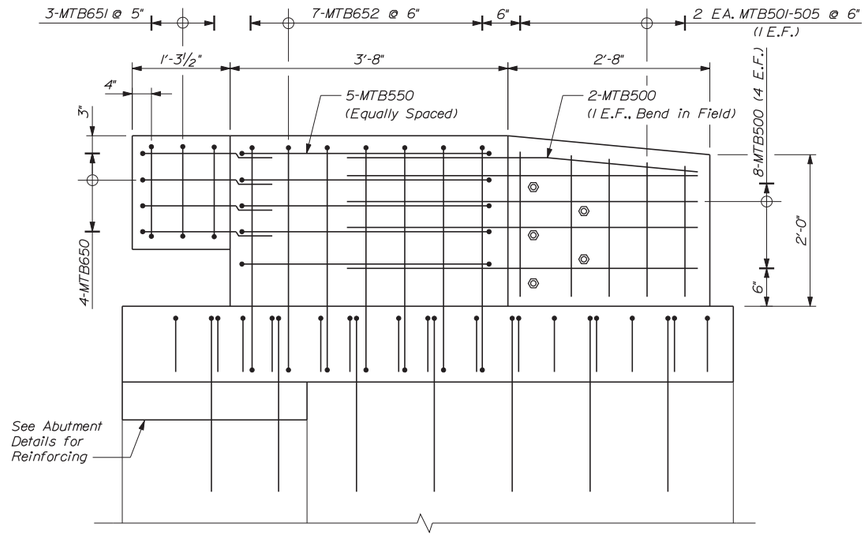

CONCRETE TRANSITION BARRIER ELEVATION - TYPE B

Scale: 1" = 1'-0"

(SB Bridge, Southeast Wingwall Shown)

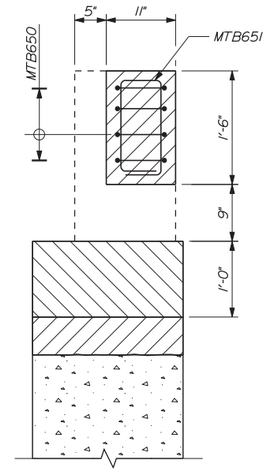

SECTION D-D

Scale: 1" = 1'-0"

(SB Bridge, Southeast Wingwall Shown)

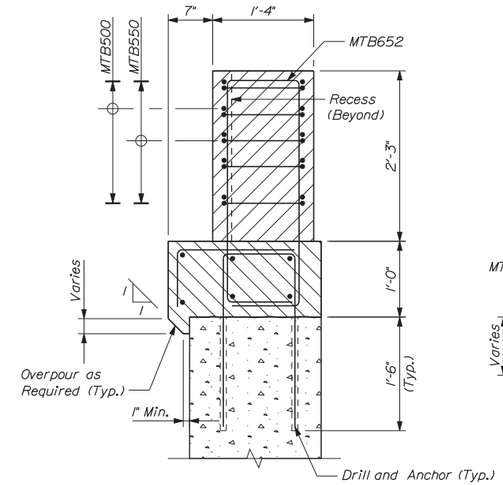

SECTION E-E

Scale: 1" = 1'-0"

(SB Bridge, Southeast Wingwall Shown)

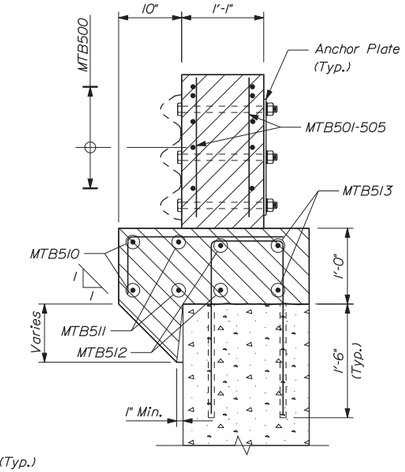

SECTION F-F

Scale: 1" = 1'-0"

(SB Bridge, Southeast Wingwall Shown)

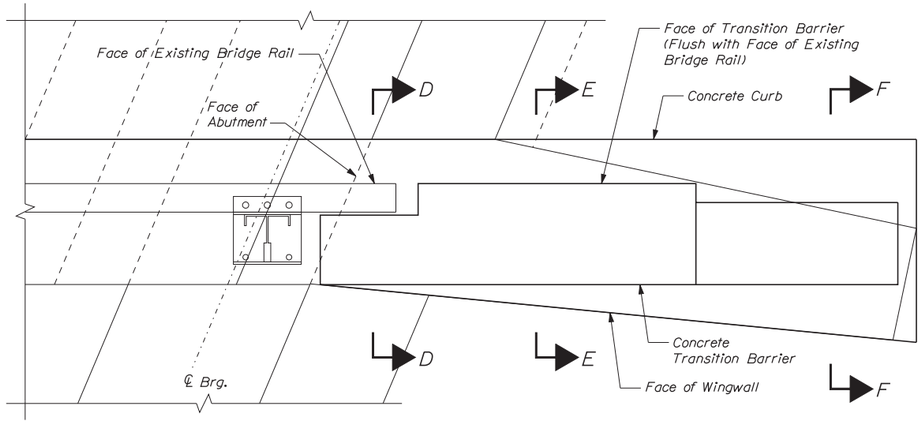

CONCRETE TRANSITION BARRIER PLAN - TYPE B

Scale: 1" = 1'-0"

(SB Bridge, Southeast Wingwall Shown)

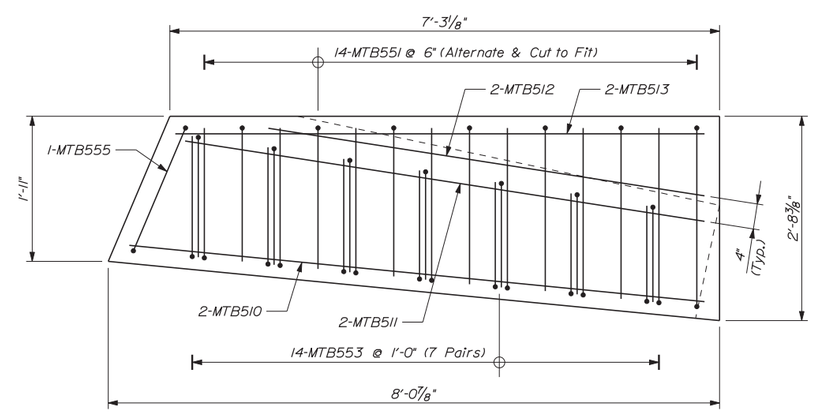

PLAN - CONCRETE CURB REINFORCEMENT - TYPE B

Not to Scale

NOTE

1. See Bridge Plan and Elevation for locations of Barrier Type B.

Date:1/23/2014

Filename: ...\054_Conc_Trans_Barrier_04.dgn

Scale: As Noted

No.	Revision	By	Date

Designed by:

VHB Vanasse Hangen Brustlin, Inc.

CONSULTANT PROJECT MANAGER: T. BRYANT

	By	Date		By	Date
Designed	JAW	1/14	Checked SMH	KJG	1/14
Drawn	BJM	1/14	In Charge of	TSB	1/14

VANASSE HANGEN BRUSTLIN, INC.
500 Southborough Dr.
Suite 105B
South Portland, ME 04106
TEL (207) 889-3150
FAX (207) 253-5596

MAINE TURNPIKE

THE GOLD STAR MEMORIAL HIGHWAY

MTA PROJECT MANAGER: Ralph C. Norwood IV, P.E.

BRIDGE REHABILITATION
YORK RIVER BRIDGES

CONCRETE TRANSITION BARRIER DETAILS
(4 OF 4)

SHEET NUMBER:

CONTRACT: 2014.05

54 OF 103

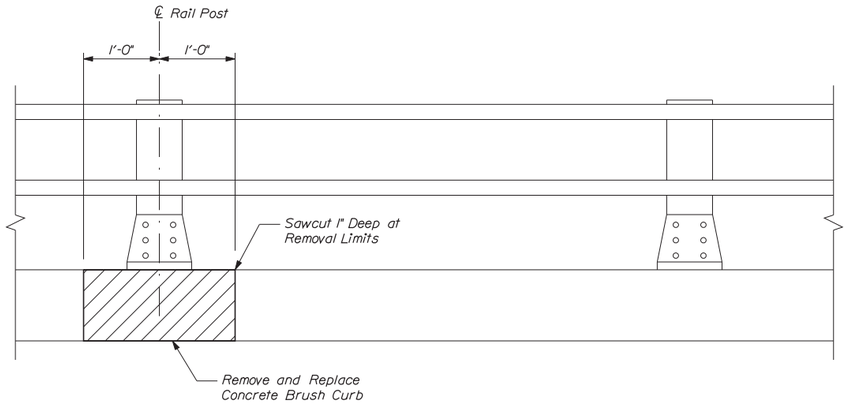

ELEVATION

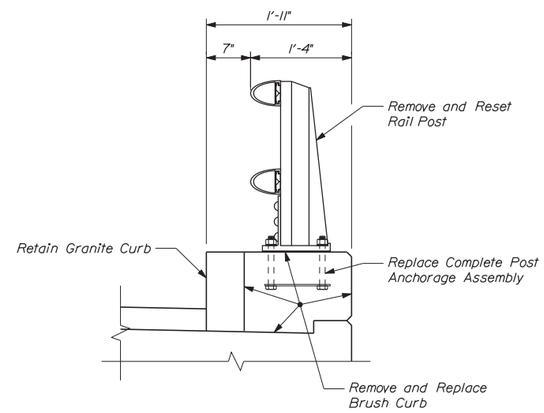

SECTION

REMOVE AND RESET BRIDGE RAIL POST DETAILS

Not to Scale

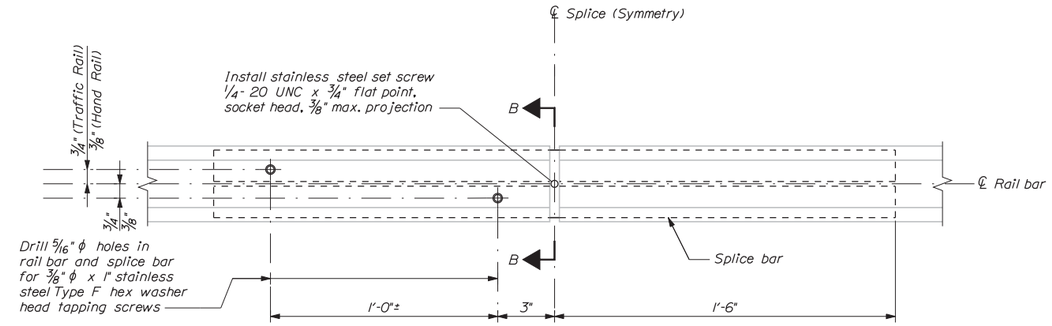

REAR ELEVATION

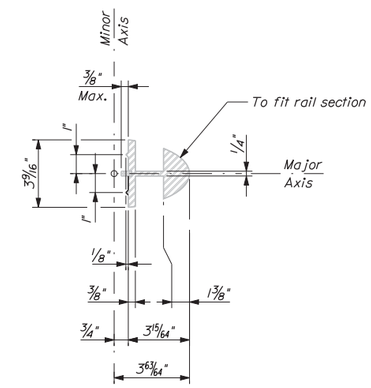

SECTION B-B

BRIDGE RAILING SPLICE MODIFICATION DETAILS

Not to Scale

NOTE:

1. See General Construction Notes (3 of 3) Sheet for Bridge Rail Rehabilitation Notes.

Date:1/23/2014

Filename: ...\cad\st\planset\055_Misc_dt.dgn

Scale: As Noted

No.	Revision	By	Date

Designed by:

Vanasse Hangen Brustlin, Inc.

CONSULTANT PROJECT MANAGER: T. BRYANT

	By	Date		By	Date
Designed	RSB	1/14	Checked	KJG	1/14
Drawn	BJM	1/14	In Charge of	TSB	1/14

VANASSE HANGEN BRUSTLIN, INC.
500 Southborough Dr.
Suite 105B
South Portland, ME 04106
TEL (207) 889-3150
FAX (207) 253-5596

MAINE TURNPIKE

THE GOLD STAR MEMORIAL HIGHWAY

MTA PROJECT MANAGER: Ralph C. Norwood IV, P.E.

BRIDGE REHABILITATION
YORK RIVER BRIDGES

BRIDGE RAIL REHABILITATION DETAILS

SHEET NUMBER:

CONTRACT: 2014.05

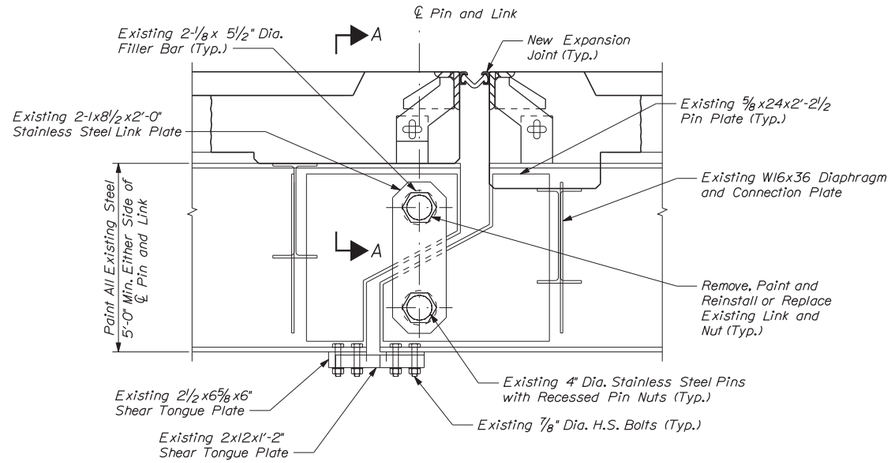

ELEVATION
Scale: 1" = 1'-0"

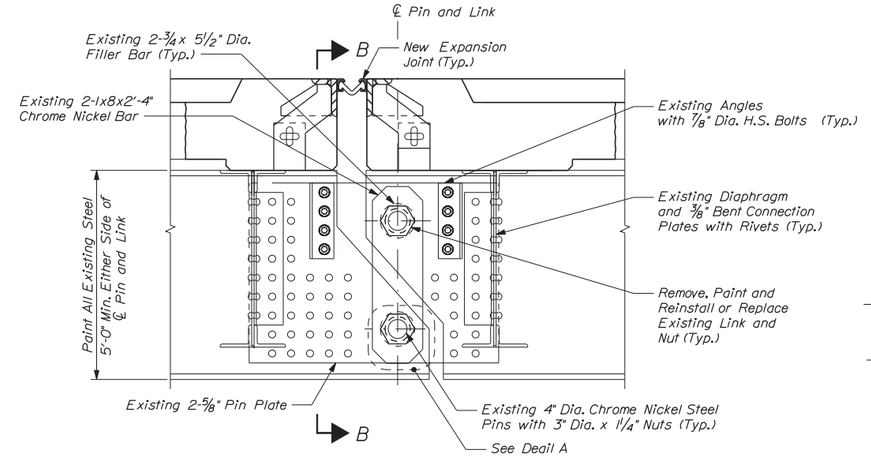

ELEVATION
Scale: 1" = 1'-0"

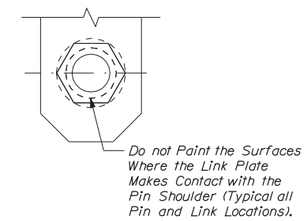

DETAIL A
Scale: 2" = 1'-0"

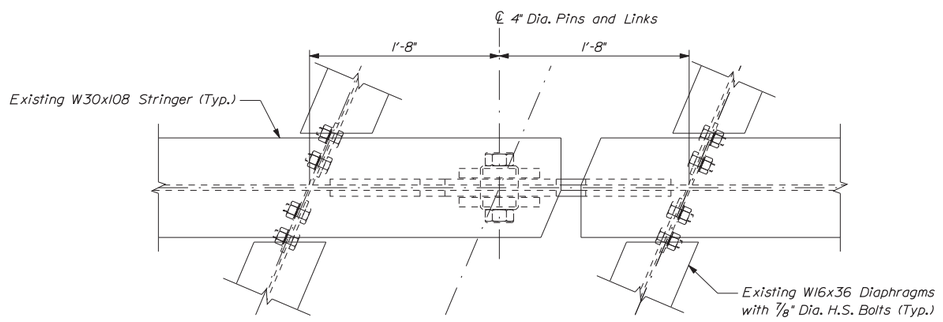

PLAN
(Bottom Flange, Shear Tongue and Drain Detail Not Shown for Clarity)
Scale: 1 1/2" = 1'-0"

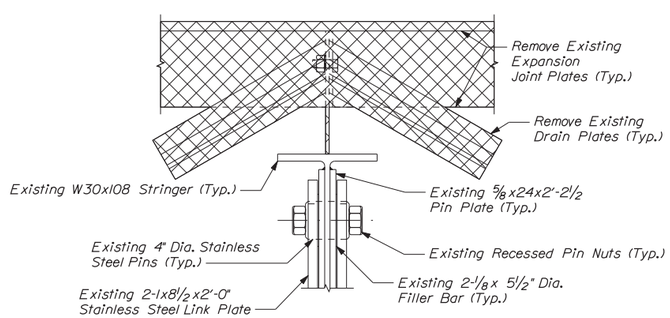

SECTION A-A
Scale: 1 1/2" = 1'-0"

PIN AND LINK DETAILS FOR W30X108 BEAMS

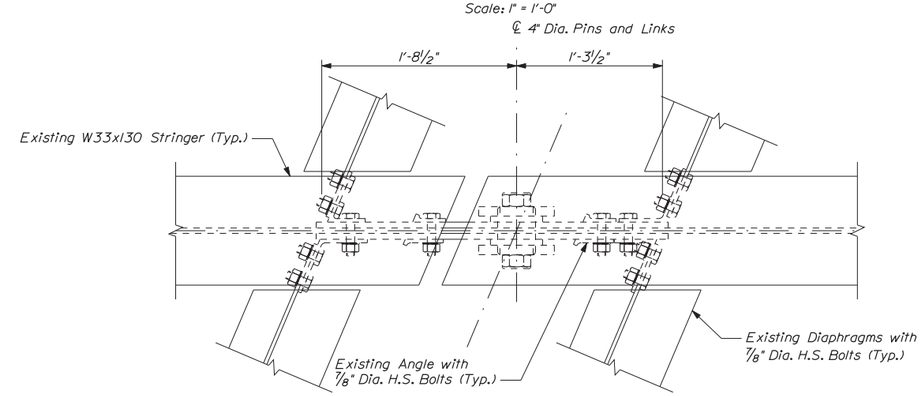

PLAN
(Bottom Flange and Drain Detail Not Shown for Clarity)
Scale: 1 1/2" = 1'-0"

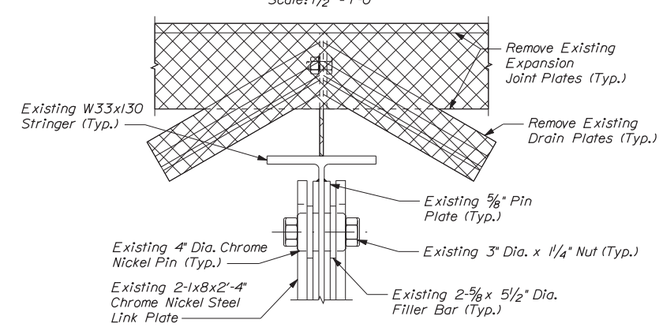

SECTION B-B
Scale: 1 1/2" = 1'-0"

PIN AND LINK DETAILS FOR W33X130 BEAMS

NOTES:

1. See Pin and Link Expansion Joint Details for Deck Expansion Joint Replacement Details.
2. Payment for the removal of existing drain plate assembly shall be paid for as incidental to Item 520.2215 Bridge Joint Modifications.
3. See General Construction Notes (3 of 3) Sheet for Pin and Link Repair Notes.

Scale: As Noted

No.	Revision	By	Date

Designed by:

Vanasse Hangen Brustlin, Inc.

CONSULTANT PROJECT MANAGER: T. BRYANT

	By	Date		By	Date
Designed	RSB	1/14	Checked	KJG	1/14
Drawn	CLC	1/14	In Charge of	TSB	1/14

VANASSE HANGEN BRUSTLIN, INC.
500 Southborough Dr.
Suite 105B
South Portland, ME 04106
TEL (207) 889-3150
FAX (207) 253-5596

MAINE TURNPIKE

THE GOLD STAR MEMORIAL HIGHWAY

MTA PROJECT MANAGER: Ralph C. Norwood IV, P.E.

BRIDGE REHABILITATION
YORK RIVER BRIDGES

PIN AND LINK REPAIR DETAILS

SHEET NUMBER:

CONTRACT: 2014.05

Date:1/23/2014
Filename: ...\cad\st\planset\056_from_dt.dgn

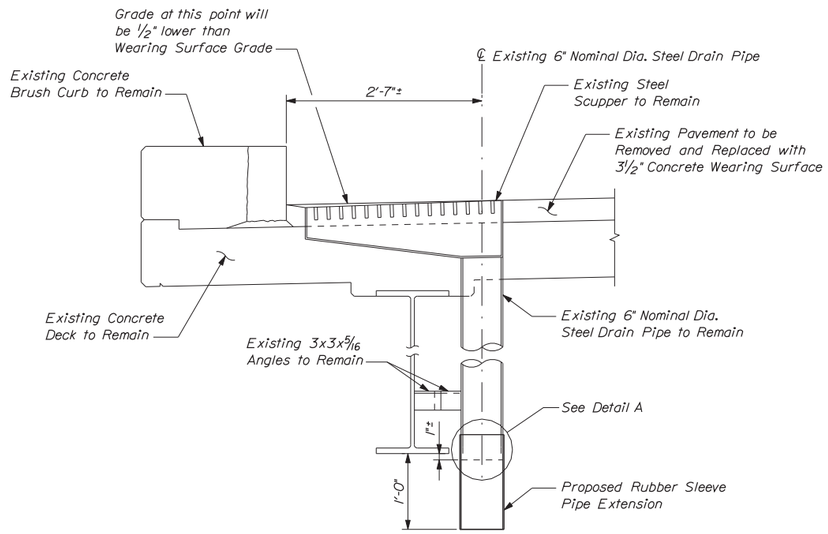

TYPICAL BRIDGE DRAIN SECTION
Scale: 1" = 1'-0"

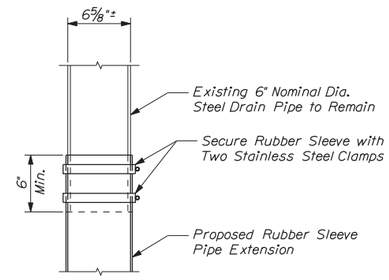

DETAIL A
Scale: 1 1/2" = 1'-0"

NOTES

1. Install rubber sleeve on the end of each steel drain pipe except over navigation channel. Pipe surface preparation prior to installation is not required.
2. Secure each rubber sleeve to drain pipe with two stainless steel clamps.
3. All costs for bridge drain pipe extensions shall be included in Item 502.71, Bridge Drain Extension.
4. Contractor shall field verify diameter of rubber sleeve required for drain pipe extensions prior to ordering sleeves.

Date:1/23/2014

Filename: ...\st\planset\057_scupper_dt.dgn

Scale: As Noted

No.	Revision	By	Date

Designed by:

VHB Vanasse Hangen Brustlin, Inc.

CONSULTANT PROJECT MANAGER: T. BRYANT

	By	Date		By	Date
Designed	RSB	1/14	Checked	KJG	1/14
Drawn	CLC	1/14	In Charge of	TSB	1/14

VANASSE HANGEN BRUSTLIN, INC.
500 Southborough Dr.
Suite 105B
South Portland, ME 04106
TEL (207) 889-3150
FAX (207) 253-5596

MAINE TURNPIKE

THE GOLD STAR MEMORIAL HIGHWAY

MTA PROJECT MANAGER: Ralph C. Norwood IV, P.E.

BRIDGE REHABILITATION
YORK RIVER BRIDGES

BRIDGE DRAIN PIPE EXTENSION DETAILS

CONTRACT: 2014.05

SHEET NUMBER:

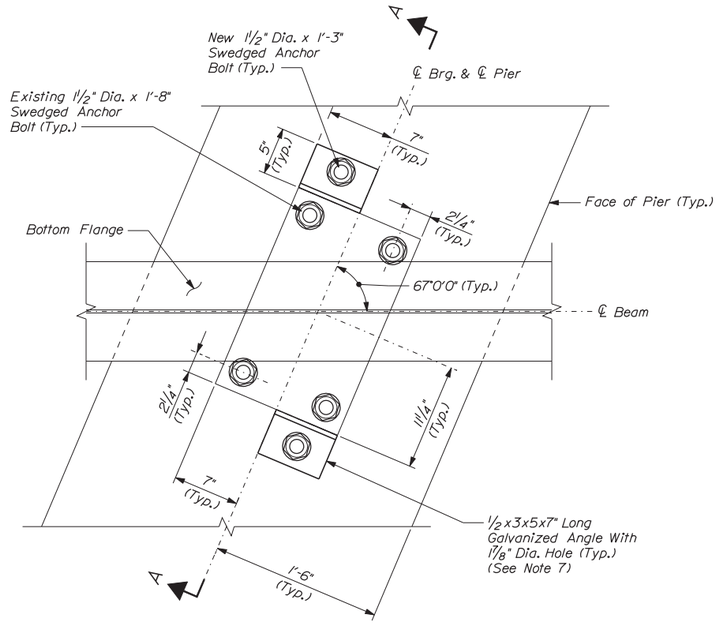

DETAIL A PLAN
Scale: 1½" = 1'-0"

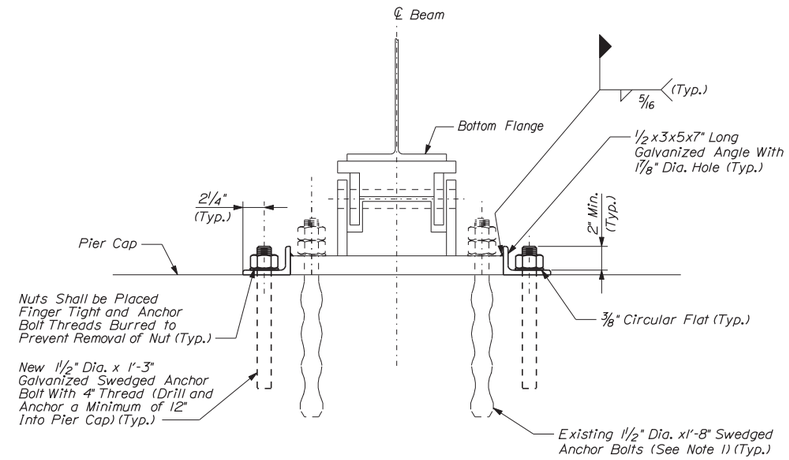

SECTION A-A
Scale: 1½" = 1'-0"

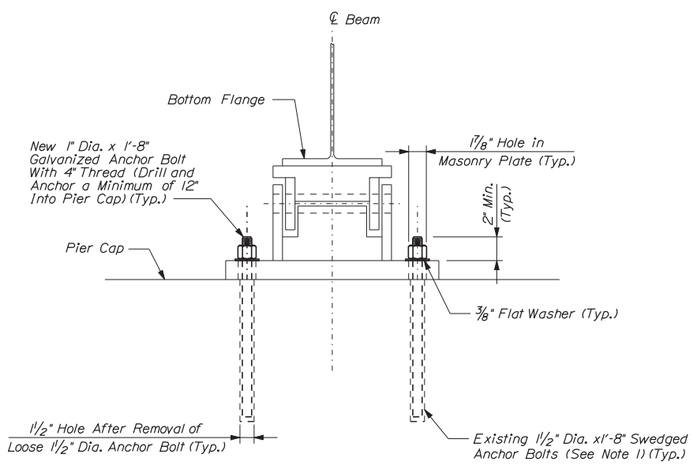

DETAIL B
Scale: 1½" = 1'-0"

BEARING CONDITION TABLES

Bent/Broken Anchor Bolts			
Pier	Beam	Anchor Bolt Location	Quantity
4	1	Southwest	1
8	2	-	1
	3	-	1
	4	-	1
9	1	-	1
	2	-	2
	3	-	2
	4	One Bent/One Broken	2
12	3	-	2
		Bent Anchor Bolt Total:	14

Loose/Missing Anchor Bolts			
Pier	Beam	Anchor Bolt Location	Quantity
2	16	Southeast	1
3	3	Southwest	1
8	13	Southwest and Northeast	2
10	2	-	1
	4	Southwest	1
	13	Northeast Missing	1
11	1	-	2
	3	-	3
	4	-	3
		Loose/Missing Anchor Bolt Total:	15

NOTES:

1. Loose anchor bolts shall be removed if possible. If removed successfully, pier bearing repairs shown in Detail B shall be completed. Otherwise, existing anchor bolts shall be kept in place and repairs shown in Detail A shall be completed.

2. Bent or broken anchor bolts shall be inspected by the Resident, to determine whether the bearing needs repair. If the Resident determines that repair is needed, the steps in Note 1 shall be followed to determine which repair detail will be required.

3. Missing anchor bolts shall be repaired as shown in Detail B.

4. Anchor bolts that have a nut and washer with significant section loss shall have existing nuts and washers removed, shall be sandblasted and shall have new nuts and washers installed.

5. Anchor bolts removed less than 10" below the concrete shall be repaired as shown in Detail A. The void created shall be filled with non-shrink grout or epoxy.

6. All anchor bolts shall be galvanized and swedged and conform to ASTM 1554, Grade 105.

7. In Detail A, the locations of the proposed galvanized steel angles can be adjusted to avoid proposed anchor bolt conflicts with existing reinforcing steel in the pier cap. Each angle may be located anywhere along the edge of the masonry plate provided the angle does not extend beyond the edge of the masonry plate.

Scale: 1½" = 1'-0"

No.	Revision	By	Date

Designed by:

Vanasse Hangen Brustlin, Inc.

CONSULTANT PROJECT MANAGER: T. BRYANT

	By	Date		By	Date
Designed	RSB	1/14	Checked	KJG	1/14
Drawn	CLC	1/14	In Charge of	TSB	1/14

VANASSE HANGEN BRUSTLIN, INC.
500 Southborough Dr.
Suite 105B
South Portland, ME 04106
TEL (207) 889-3150
FAX (207) 253-5596

MAINE TURNPIKE

THE GOLD STAR MEMORIAL HIGHWAY

MTA PROJECT MANAGER: Ralph C. Norwood IV, P.E.

BRIDGE REHABILITATION
YORK RIVER BRIDGES

PIER BEARING REPAIR DETAILS

SHEET NUMBER:

CONTRACT: 2014.05

Date: 1/23/2014
Filename: ...\st\planset\058_bearing_01.dgn

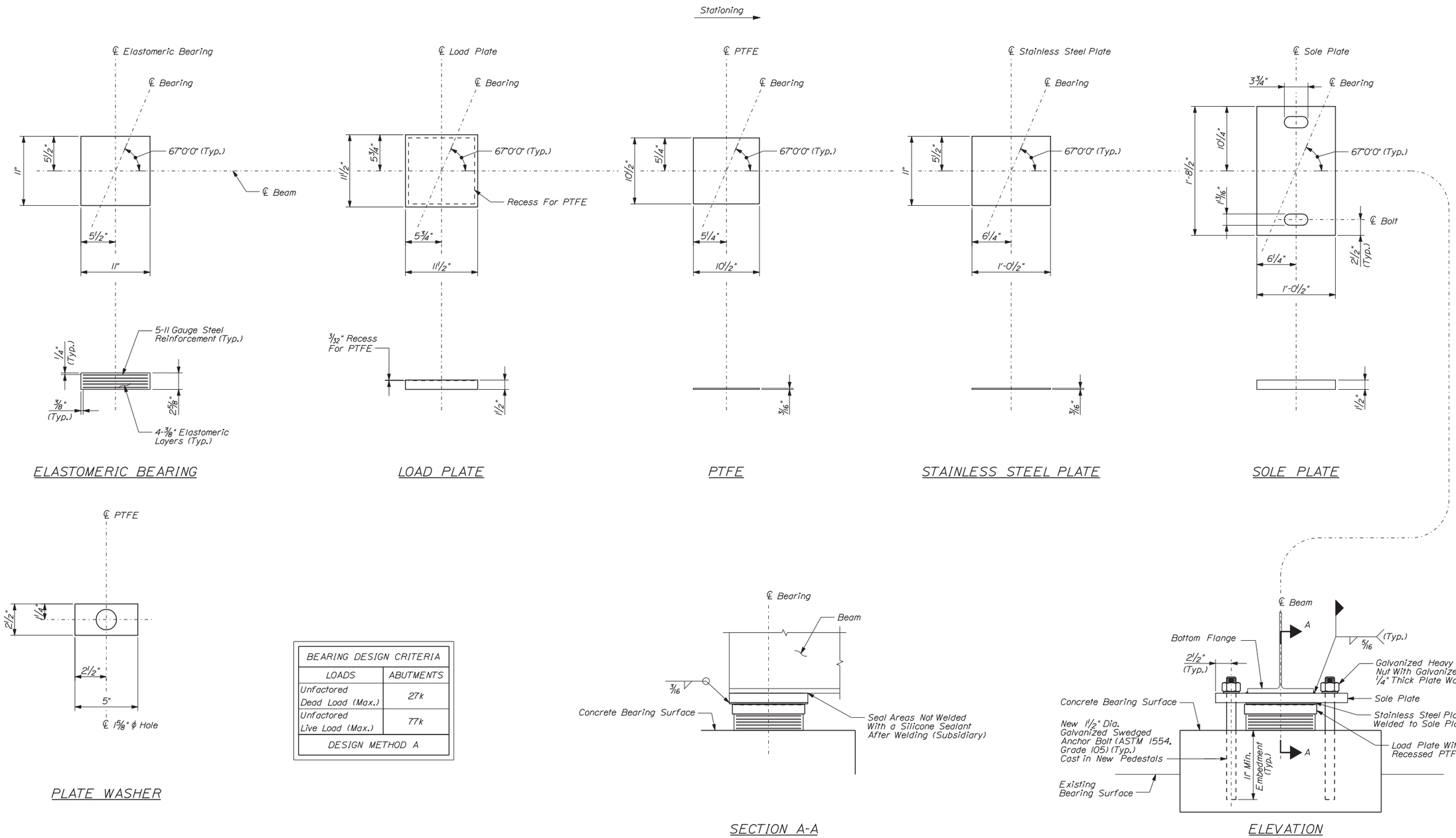

BEARING DESIGN CRITERIA	
LOADS	ABUTMENTS
Unfactored Dead Load (Max.)	27k
Unfactored Live Load (Max.)	77k
DESIGN METHOD A	

ABUTMENT BEARING (EXPANSION)

(Bearing Stiffener Not Shown For Clarity)
(Abutment No. 1 Shown, Abutment No. 2 Similar)

NOTE:

1. See General Construction Notes (3 of 3) Sheet for Elastomeric Bearing Notes.

Date: 1/23/2014

Filename: ...\st\planset\059_bearing_02.dgn

Scale: 1 1/2" = 1'-0"

No.	Revision	By	Date

Designed by:

VHB Vanasse Hangen Brustlin, Inc.

CONSULTANT PROJECT MANAGER: T. BRYANT

	By	Date		By	Date
Designed	RSB	1/14	Checked	KJG	1/14
Drawn	CLC	1/14	In Charge of	TSB	1/14

VANASSE HANGEN BRUSTLIN, INC.
500 Southborough Dr.
Suite 105B
South Portland, ME 04106
TEL (207) 889-3150
FAX (207) 253-5596

MAINE TURNPIKE

THE GOLD STAR MEMORIAL HIGHWAY

MTA PROJECT MANAGER: Ralph C. Norwood IV, P.E.

BRIDGE REHABILITATION
YORK RIVER BRIDGES

ABUTMENT BEARING REPLACEMENT DETAILS

CONTRACT: 2014.05

SHEET NUMBER:
59 OF 103

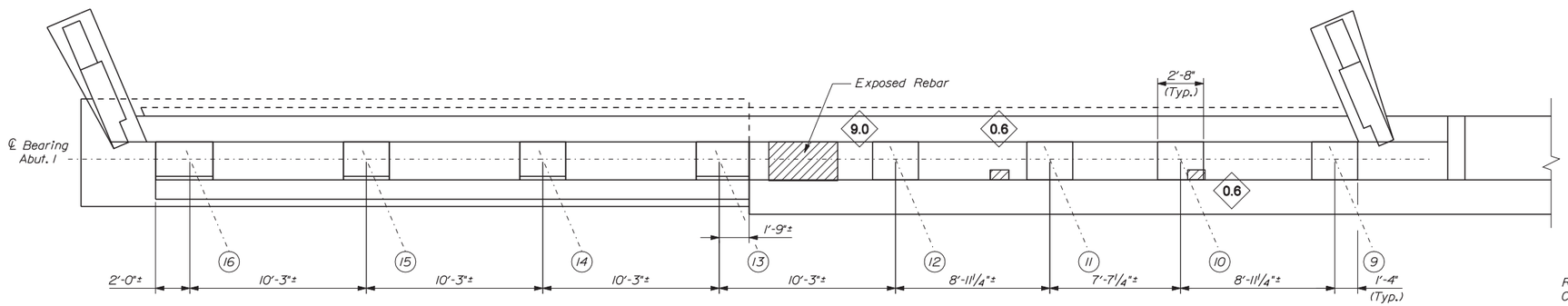

NB ABUTMENT 1 PLAN

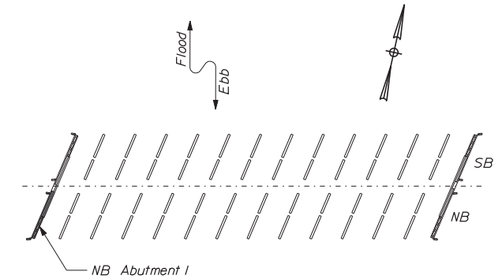

KEY PLAN

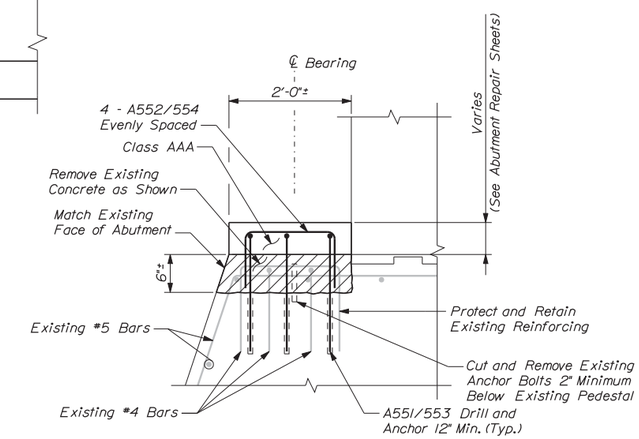

TYPICAL PEDESTAL DETAIL AT ABUTMENTS

Not to Scale

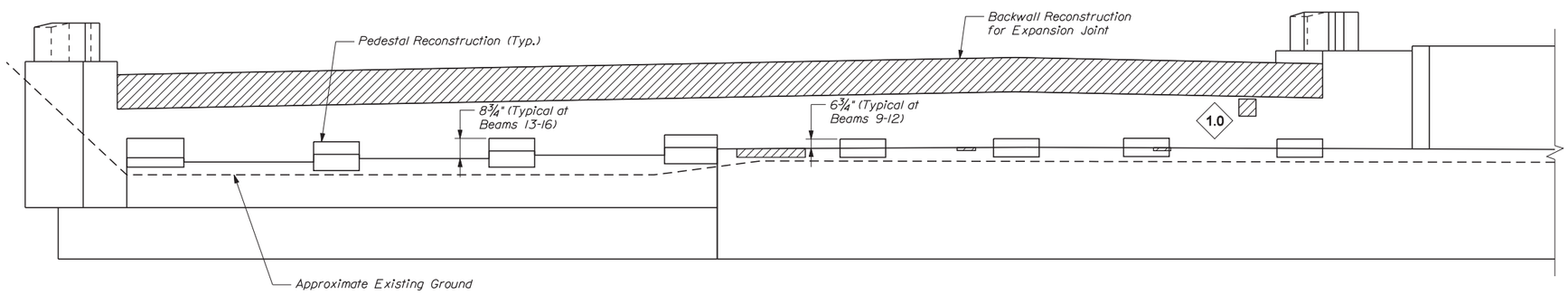

NB ABUTMENT 1 ELEVATION

KEY:

- Approximate Limits of Delamination
- Approximate Limits of Spall
- (#) Square Foot Area of Delamination (<7.9" Deep unless otherwise noted)
- ◇# Square Foot Area of Spall (<7.9" Deep unless otherwise noted)
- [#] Linear Foot of Crack

Date:1/23/2014

Filename: ...\060_Abutment Details_02.dgn

Scale: ¼" = 1'-0"

No.	Revision	By	Date

Designed by:

VHB Vanasse Hangen Brustlin, Inc.

CONSULTANT PROJECT MANAGER: T. BRYANT

	By	Date		By	Date
Designed	RSB	1/14	Checked	KJG	1/14
Drawn	MJB	1/14	In Charge of	TSB	1/14

VANASSE HANGEN BRUSTLIN, INC.
500 Southborough Dr.
Suite 105B
South Portland, ME 04106
TEL (207) 889-3150
FAX (207) 253-5596

MAINE TURNPIKE

THE GOLD STAR MEMORIAL HIGHWAY

MTA PROJECT MANAGER: Ralph C. Norwood IV, P.E.

BRIDGE REHABILITATION
YORK RIVER BRIDGES

NB BRIDGE ABUTMENT 1
REPAIR AREAS

SHEET NUMBER:

CONTRACT: 2014.05

Date:1/23/2014

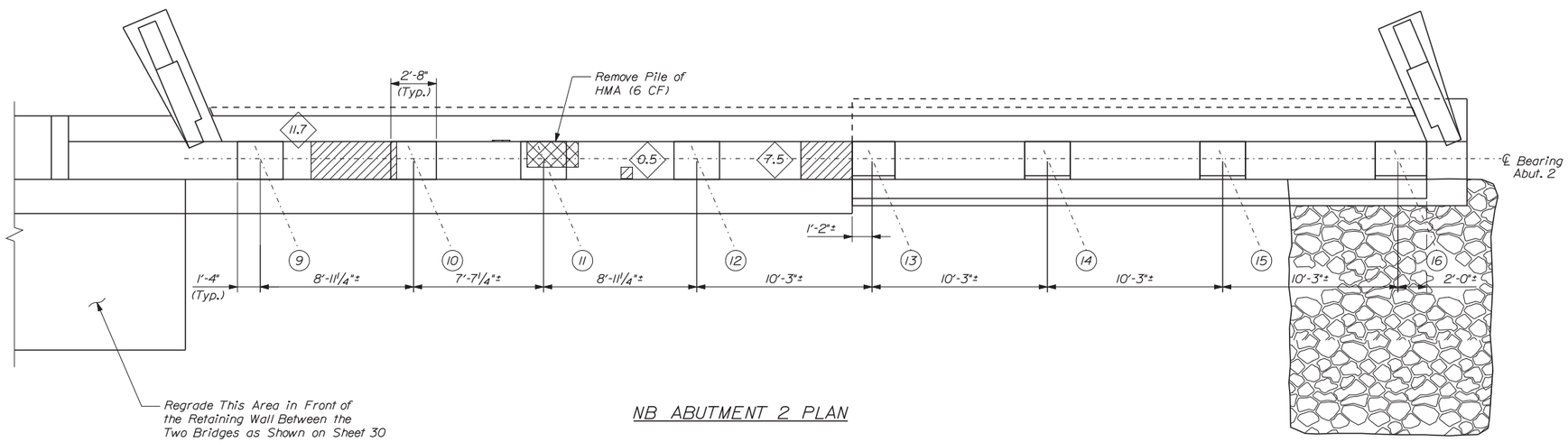

NB ABUTMENT 2 PLAN

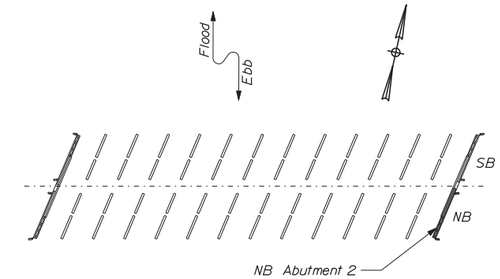

KEY PLAN

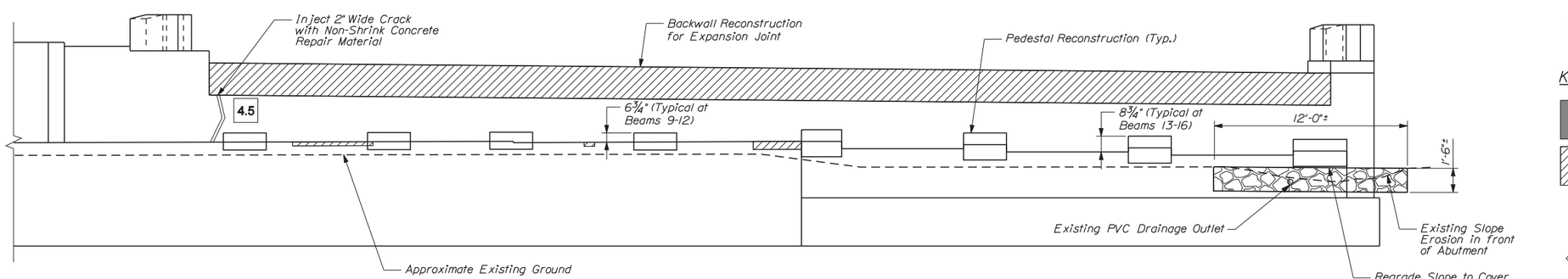

NB ABUTMENT 2 ELEVATION

NOTES:

1. See Typical Concrete Repair Details for Typical Pedestal Repair Details.

2. Payment to regrade the slope will be incidental to Item 610.08, Plain Riprap.

KEY:

- Approximate Limits of Delamination
- Approximate Limits of Spall
- # Square Foot Area of Delamination (<7.9" Deep unless otherwise noted)
- # Square Foot Area of Spall (<7.9" Deep unless otherwise noted)
- # Linear Foot of Crack

Filename: ...\061_Abutment Details_01.dgn

Scale: ¼" = 1'-0"

No.	Revision	By	Date

Designed by:

Vanasse Hangen Brustlin, Inc.

CONSULTANT PROJECT MANAGER: T. BRYANT

	By	Date		By	Date
Designed	RSB	1/14	Checked	KJG	1/14
Drawn	MJB	1/14	In Charge of	TSB	1/14

VANASSE HANGEN BRUSTLIN, INC.
500 Southborough Dr.
Suite 105B
South Portland, ME 04106
TEL (207) 889-3150
FAX (207) 253-5596

MAINE TURNPIKE

THE GOLD STAR MEMORIAL HIGHWAY

MTA PROJECT MANAGER: Ralph C. Norwood IV, P.E.

BRIDGE REHABILITATION
YORK RIVER BRIDGES

NB BRIDGE ABUTMENT 2
REPAIR AREAS

SHEET NUMBER:

CONTRACT: 2014.05

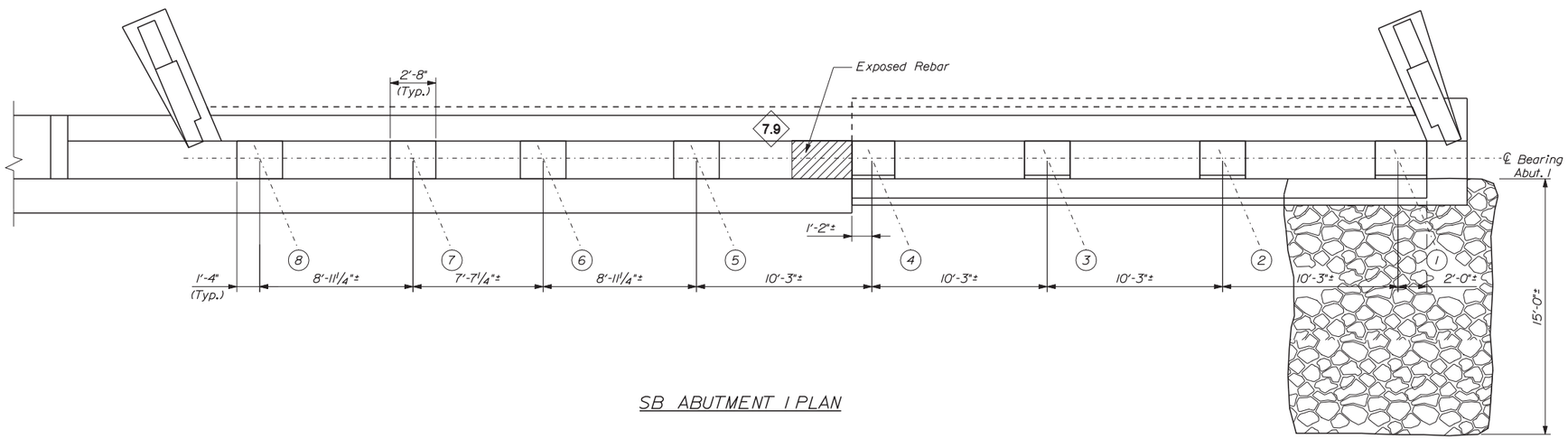

SB ABUTMENT 1 PLAN

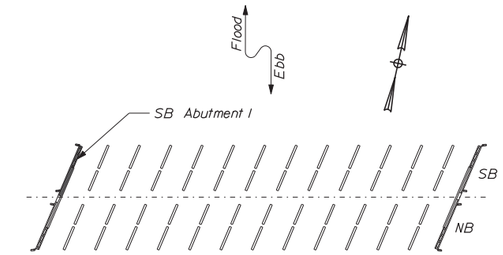

KEY PLAN

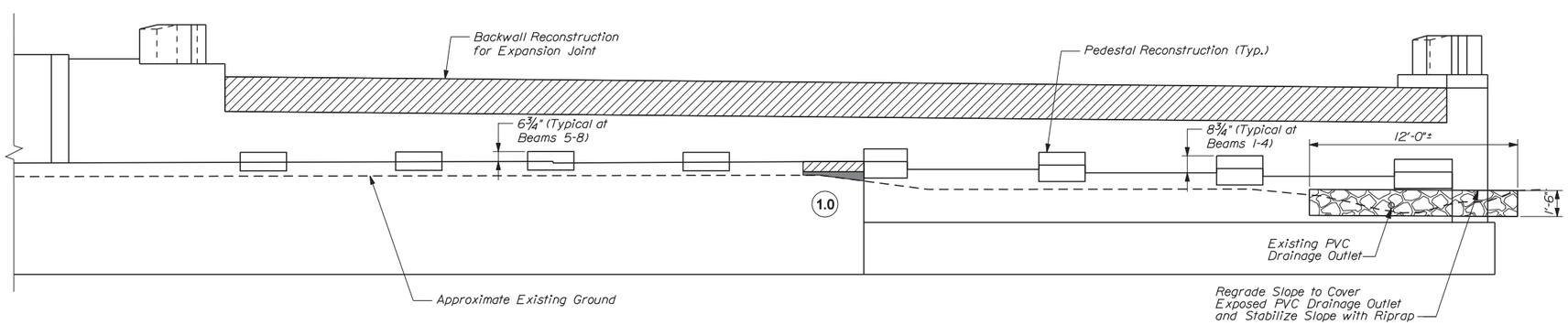

SB ABUTMENT 1 ELEVATION

NOTES:

1. See Typical Concrete Repair Details for Typical Pedestal Repair Details.

2. Payment to regrade the slope will be incidental to Item 610.08, Plain Riprap.

KEY:

- Approximate Limits of Delamination
- Approximate Limits of Spall
- # Square Foot Area of Delamination (<7.9" Deep unless otherwise noted)
- # Square Foot Area of Spall (<7.9" Deep unless otherwise noted)
- # Linear Foot of Crack

Date: 1/23/2014

Filename: ...\062_Abutment Details_04.dgn

Scale: ¼" = 1'-0"

No.	Revision	By	Date

Designed by:

Vanasse Hangen Brustlin, Inc.

CONSULTANT PROJECT MANAGER: T. BRYANT

	By	Date		By	Date
Designed	RSB	1/14	Checked	KJG	1/14
Drawn	MJB	1/14	In Charge of	TSB	1/14

VANASSE HANGEN BRUSTLIN, INC.
500 Southborough Dr.
Suite 105B
South Portland, ME 04106
TEL (207) 889-3150
FAX (207) 253-5596

MAINE TURNPIKE

THE GOLD STAR MEMORIAL HIGHWAY

MTA PROJECT MANAGER: Ralph C. Norwood IV, P.E.

BRIDGE REHABILITATION
YORK RIVER BRIDGES

SB BRIDGE ABUTMENT 1
REPAIR AREAS

SHEET NUMBER:

CONTRACT: 2014.05

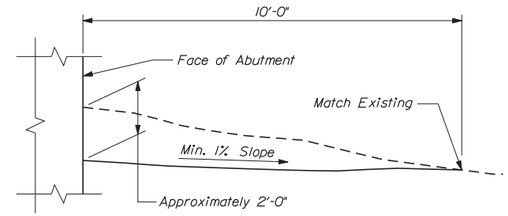

SECTION A-A

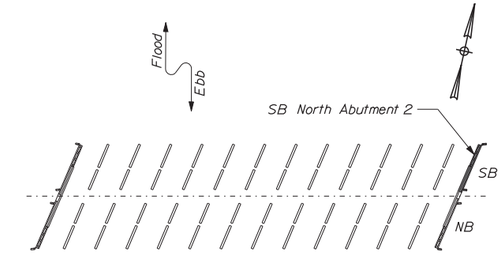

KEY PLAN

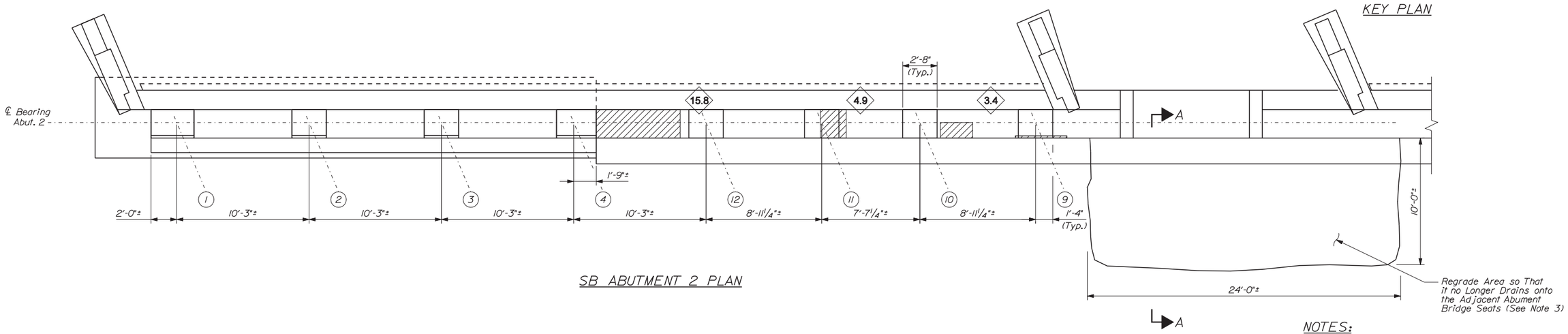

SB ABUTMENT 2 PLAN

NOTES:

1. See Typical Concrete Repair Details for Typical Pedestal Repair Details.

2. After regrading the area in front of the retaining wall between the bridges, loam and seed all disturbed areas.

3. Excavation and regrading of the area shown between the bridges shall be paid as Item 203.2, Common Excavation.

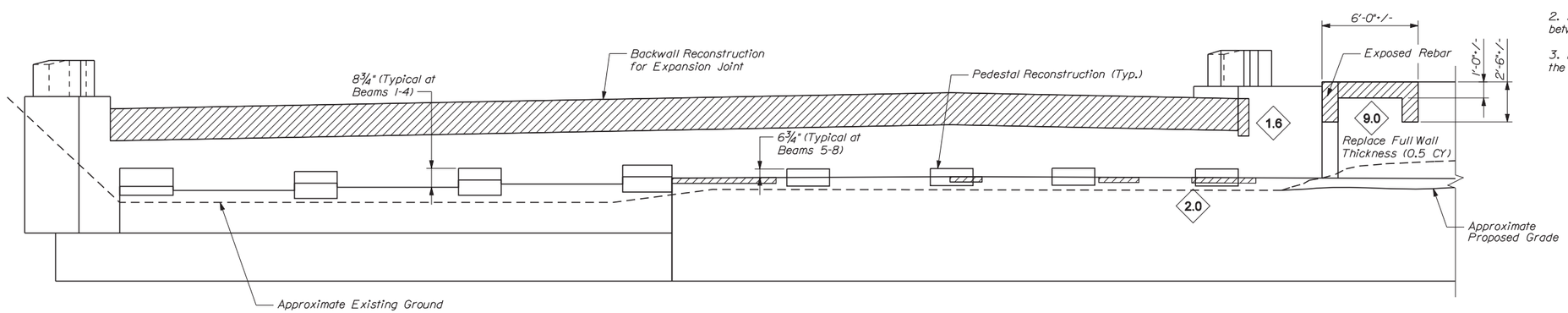

SB ABUTMENT 2 ELEVATION

KEY:

- Approximate Limits of Delamination
- Approximate Limits of Spall
- # Square Foot Area of Delamination (<7.9" Deep unless otherwise noted)
- # Square Foot Area of Spall (<7.9" Deep unless otherwise noted)
- # Linear Foot of Crack

Date:1/23/2014

Filename: ...\063_Abutment Details_03.dgn

Scale: ¼" = 1'-0"

No.	Revision	By	Date

Designed by:

Vanasse Hangen Brustlin, Inc.

CONSULTANT PROJECT MANAGER: T. BRYANT

	By	Date		By	Date
Designed	RSB	1/14	Checked	KJG	1/14
Drawn	MJB	1/14	In Charge of	TSB	1/14

VANASSE HANGEN BRUSTLIN, INC.
500 Southborough Dr.
Suite 105B
South Portland, ME 04106
TEL (207) 889-3150
FAX (207) 253-5596

MAINE TURNPIKE

THE GOLD STAR MEMORIAL HIGHWAY

MTA PROJECT MANAGER: Ralph C. Norwood IV, P.E.

BRIDGE REHABILITATION
YORK RIVER BRIDGES

SB BRIDGE ABUTMENT 2
REPAIR AREAS

SHEET NUMBER:

CONTRACT: 2014.05

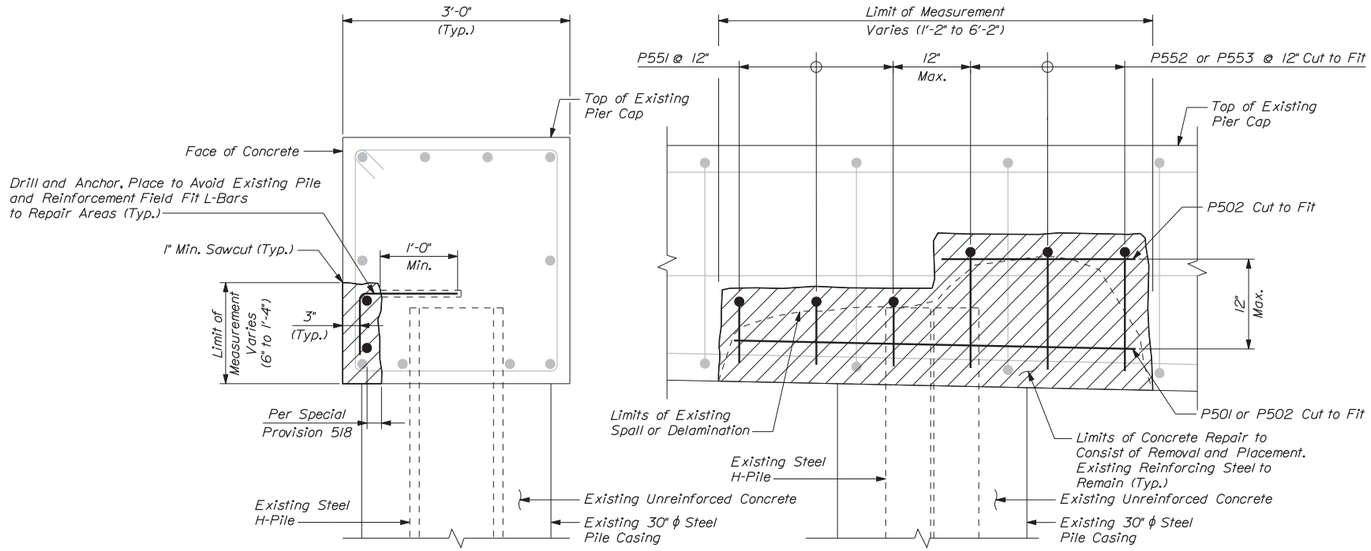

SIDE VIEW

ELEVATION

TYPICAL PIER CAP CONCRETE REPAIR AT PILE

Not to Scale

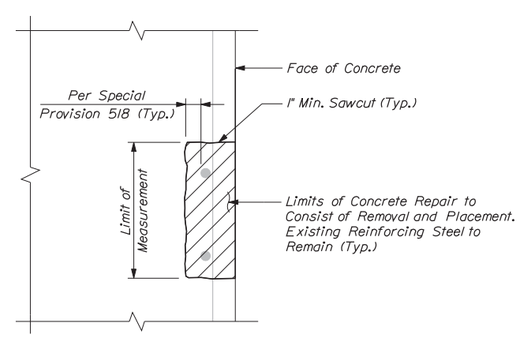

TYPICAL VERTICAL SURFACE CONCRETE REPAIR DETAILS

Not to Scale

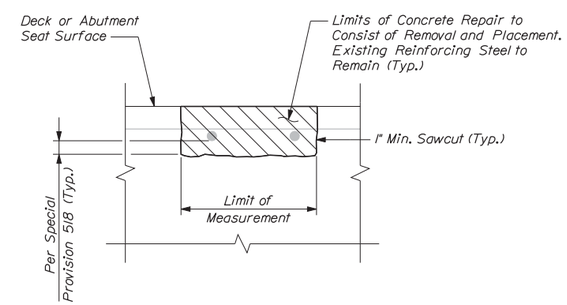

TYPICAL HORIZONTAL SURFACE CONCRETE REPAIR DETAILS

Not to Scale

NOTE:

1. See General Construction Notes (2 of 3) Sheet for Pile Repair Notes.

Date:1/23/2014

Filename: ...\cad\st\planset\064_Conc_dt.dgn

Scale: As Noted

No.	Revision	By	Date

Designed by:

VHB Vanasse Hangen Brustlin, Inc.

CONSULTANT PROJECT MANAGER: T. BRYANT

	By	Date		By	Date
Designed	RSB	1/14	Checked	KJG	1/14
Drawn	BJM	1/14	In Charge of	TSB	1/14

VANASSE HANGEN BRUSTLIN, INC.
500 Southborough Dr.
Suite 105B
South Portland, ME 04106
TEL (207) 889-3150
FAX (207) 253-5596

MAINE TURNPIKE

THE GOLD STAR MEMORIAL HIGHWAY

MTA PROJECT MANAGER: Ralph C. Norwood IV, P.E.

BRIDGE REHABILITATION
YORK RIVER BRIDGES

TYPICAL CONCRETE REPAIR DETAILS

CONTRACT: 2014.05

SHEET NUMBER:

Date:1/23/2014

KEY:

- Approximate Limits of Delamination
- Approximate Limits of Spall
- # Square Foot Area of Delamination (<7.9" Deep unless otherwise noted)
- # Square Foot Area of Spall (<7.9" Deep unless otherwise noted)
- # Linear Foot of Crack

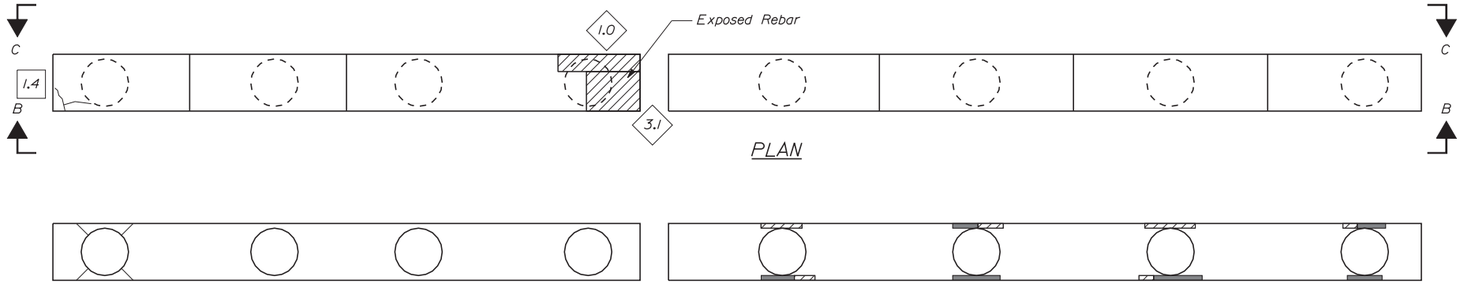

PLAN

VIEW A-A

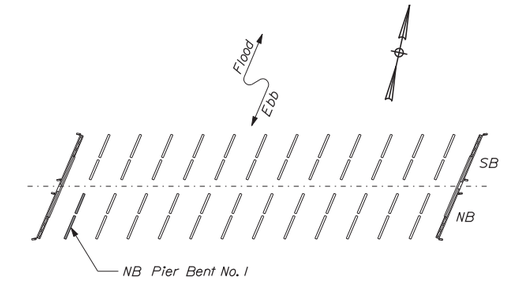

KEY PLAN

NOTE:

1. See Typical Concrete Repair Details Sheet for Concrete Repair Details.

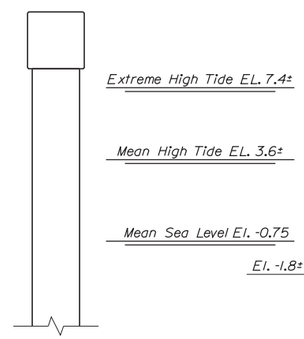

VIEW D-D

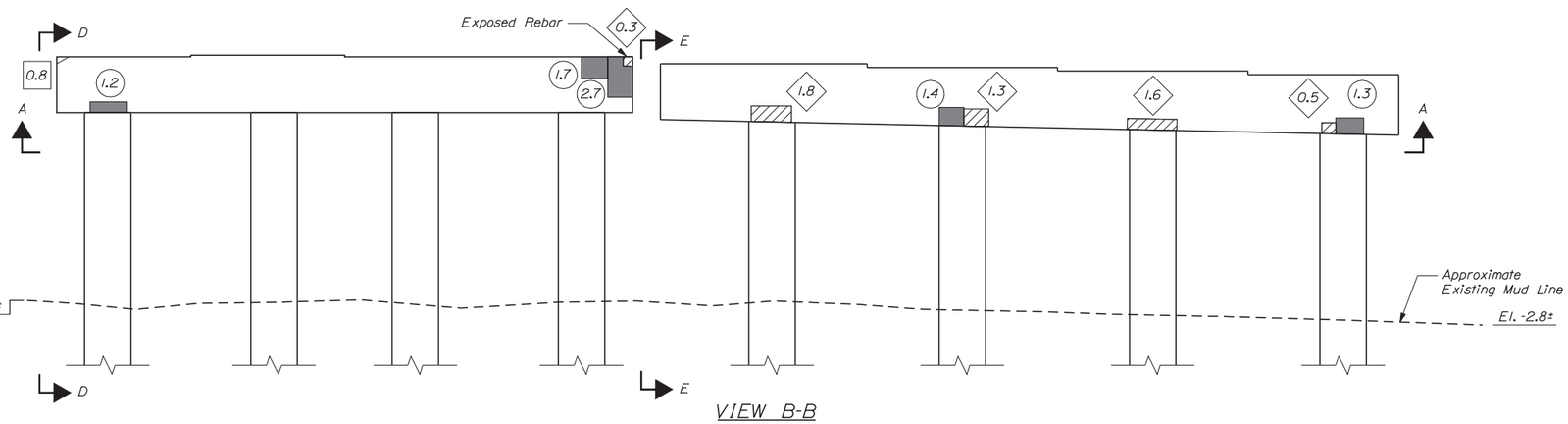

VIEW B-B

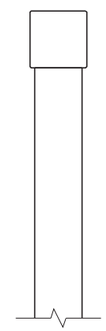

VIEW E-E

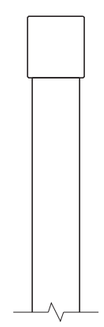

VIEW F-F

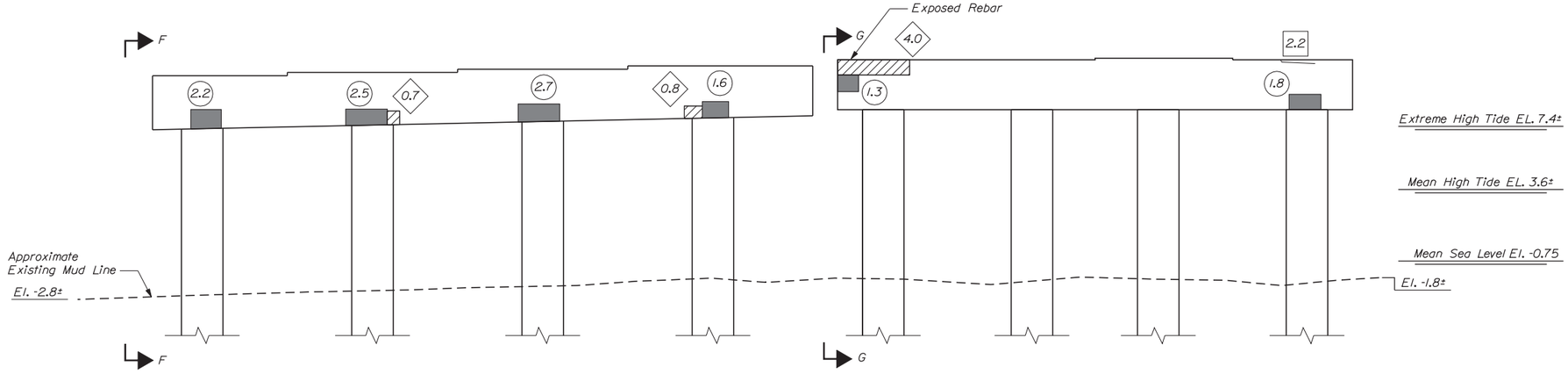

VIEW C-C

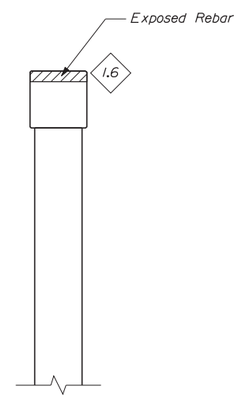

VIEW G-G

Filename: ...\st\planset\065_pier_NB_01.dgn

Scale: 1/4" = 1'-0"

No.	Revision	By	Date

Designed by:

VHB Vanasse Hangen Brustlin, Inc.

CONSULTANT PROJECT MANAGER: T. BRYANT

	By	Date		By	Date
Designed	RSB	1/14	Checked	KJG	1/14
Drawn	BJM	1/14	In Charge of	TSB	1/14

VANASSE HANGEN BRUSTLIN, INC.
500 Southborough Dr.
Suite 105B
South Portland, ME 04106
TEL (207) 889-3150
FAX (207) 253-5596

MAINE TURNPIKE

THE GOLD STAR MEMORIAL HIGHWAY

MTA PROJECT MANAGER: Ralph C. Norwood IV, P.E.

BRIDGE REHABILITATION
YORK RIVER BRIDGES

NB BRIDGE PIER BENT 1
CONCRETE REPAIR AREAS

CONTRACT: 2014.05

SHEET NUMBER:

Date:1/23/2014

KEY:

- Approximate Limits of Delamination
- Approximate Limits of Spall
- # Square Foot Area of Delamination (<7.9" Deep unless otherwise noted)
- # Square Foot Area of Spall (<7.9" Deep unless otherwise noted)
- # Linear Foot of Crack

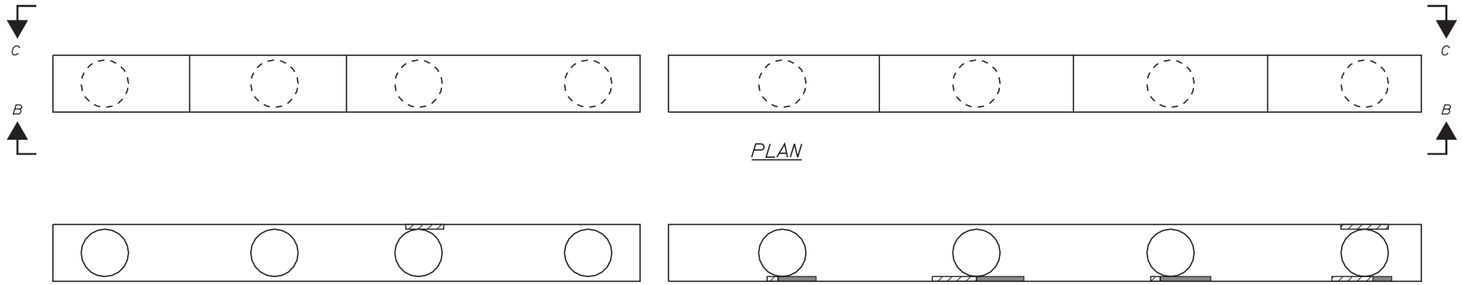

PLAN

VIEW A-A

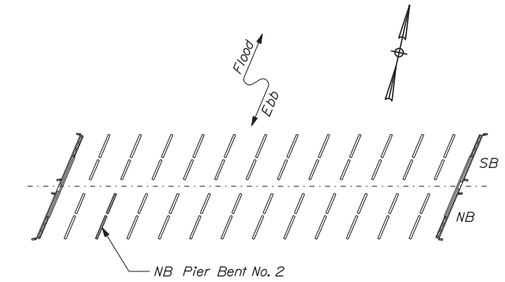

KEY PLAN

NOTE:

1. See Typical Concrete Repair Details Sheet for Concrete Repair Details.

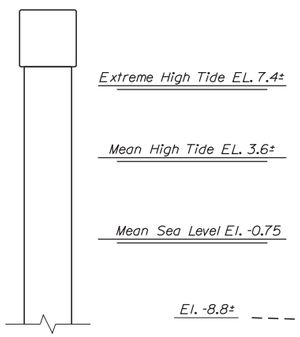

VIEW D-D

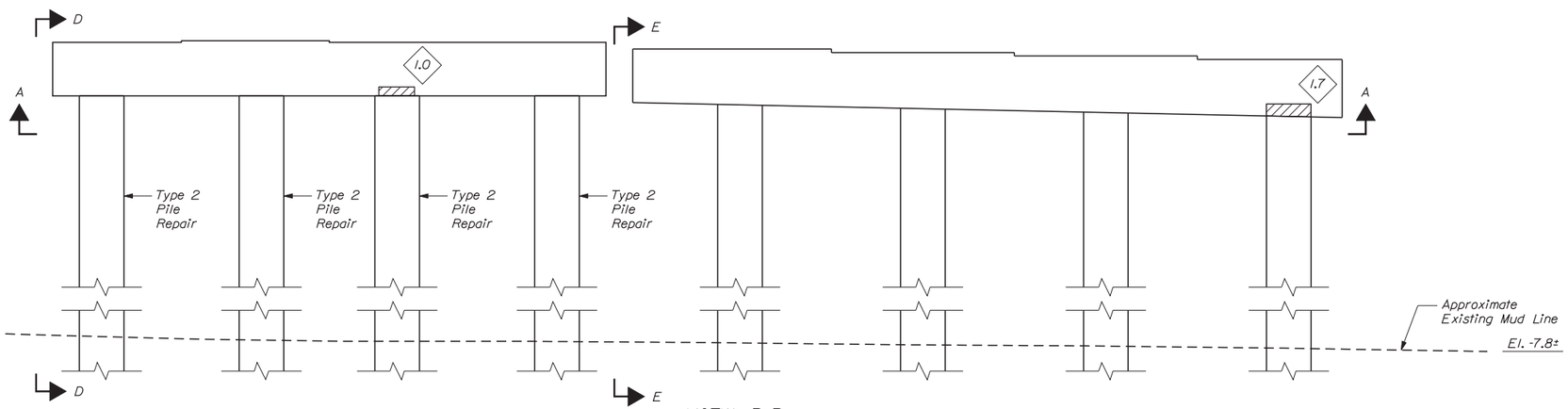

VIEW B-B

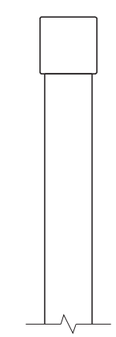

VIEW E-E

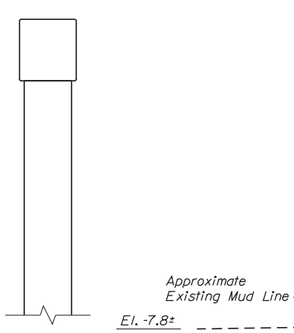

VIEW F-F

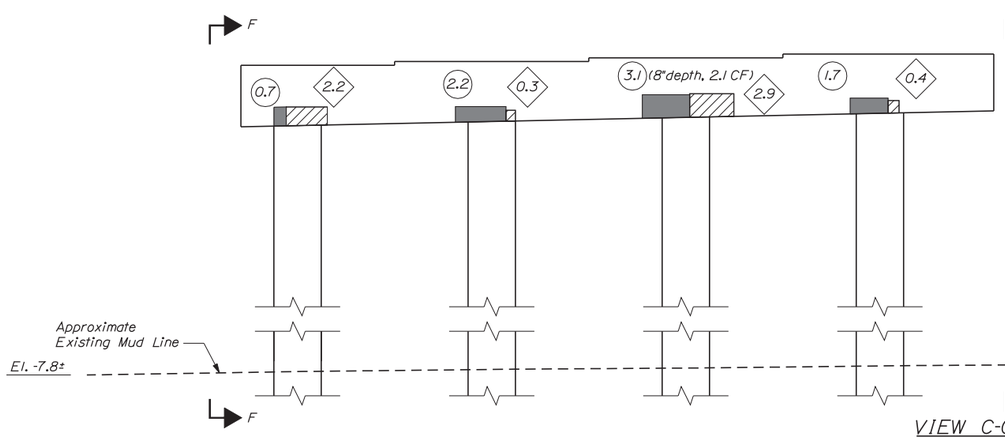

VIEW C-C

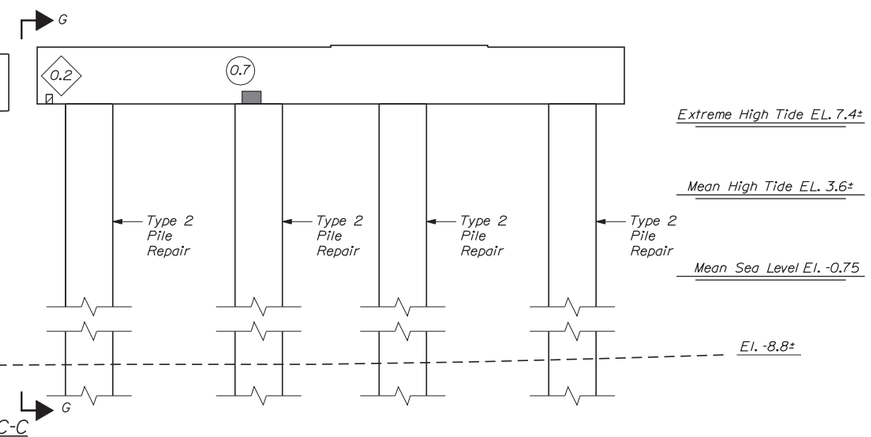

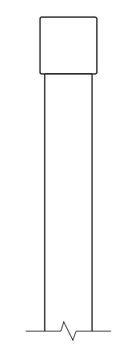

VIEW G-G

Scale: 1/4" = 1'-0"

No.	Revision	By	Date

Designed by:

VHB Vanasse Hangen Brustlin, Inc.

CONSULTANT PROJECT MANAGER: T. BRYANT

	By	Date		By	Date
Designed	RSB	1/14	Checked	KJG	1/14
Drawn	MJB	1/14	In Charge of	TSB	1/14

VANASSE HANGEN BRUSTLIN, INC.
500 Southborough Dr.
Suite 105B
South Portland, ME 04106
TEL (207) 889-3150
FAX (207) 253-5596

MAINE TURNPIKE

THE GOLD STAR MEMORIAL HIGHWAY

MTA PROJECT MANAGER: Ralph C. Norwood IV, P.E.

BRIDGE REHABILITATION
YORK RIVER BRIDGES

NB BRIDGE PIER BENT 2
CONCRETE REPAIR AREAS

SHEET NUMBER:

CONTRACT: 2014.05

Filename: ...\st\planset\066_pier_NB_02.dgn

Date:1/23/2014

KEY:

- Approximate Limits of Delamination
- Approximate Limits of Spall
- # Square Foot Area of Delamination (<7.9" Deep unless otherwise noted)
- # Square Foot Area of Spall (<7.9" Deep unless otherwise noted)
- # Linear Foot of Crack

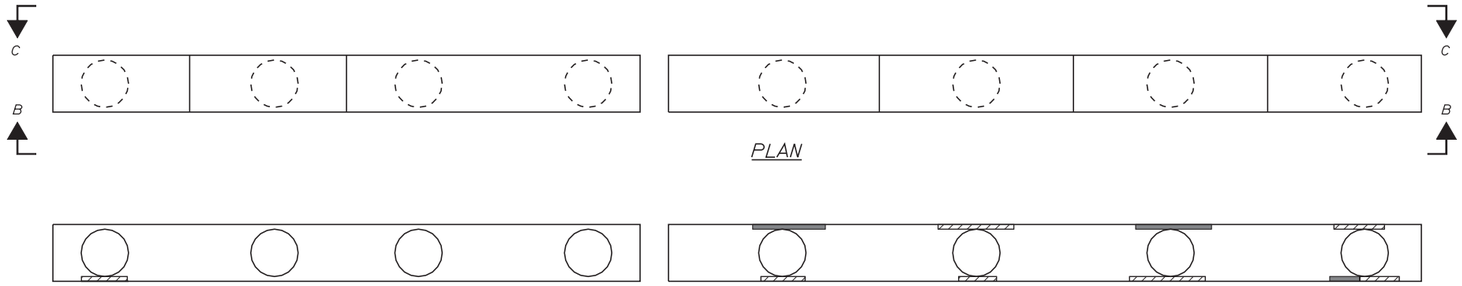

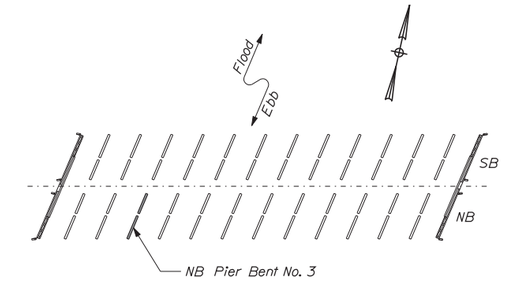

KEY PLAN

NOTE:

1. See Typical Concrete Repair Details Sheet for Concrete Repair Details.

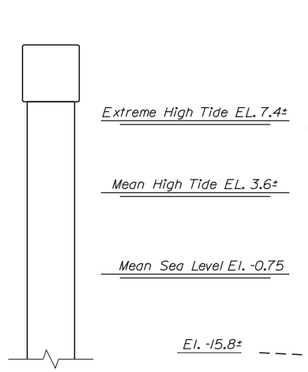

VIEW D-D

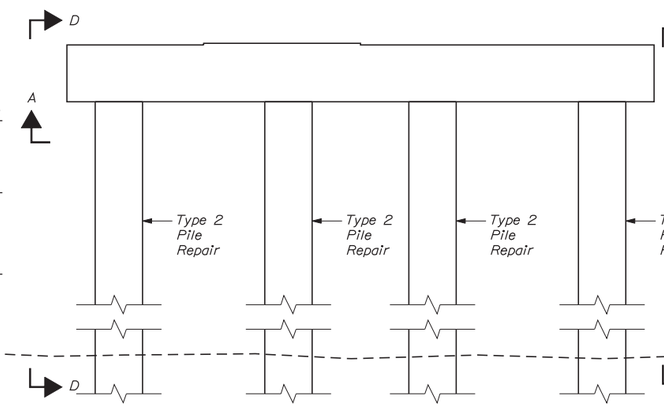

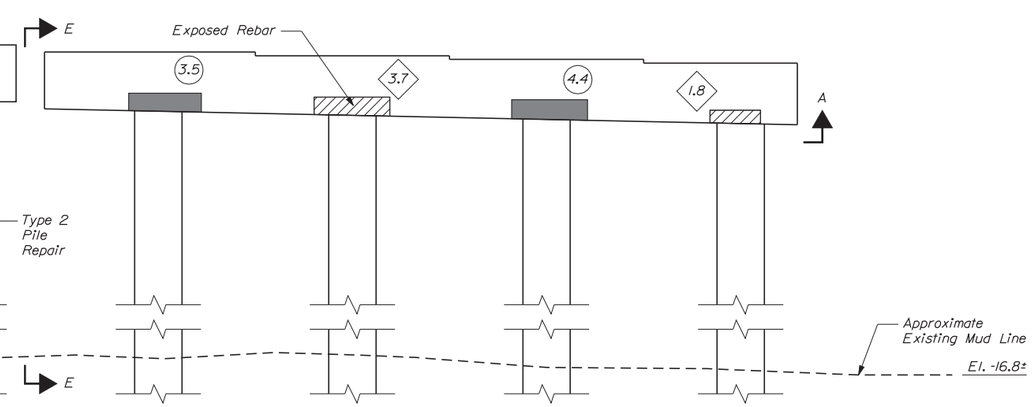

VIEW B-B

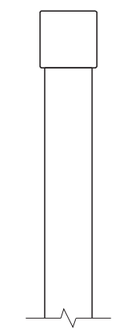

VIEW E-E

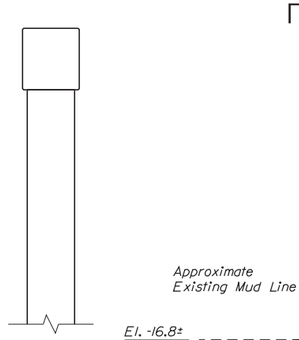

VIEW F-F

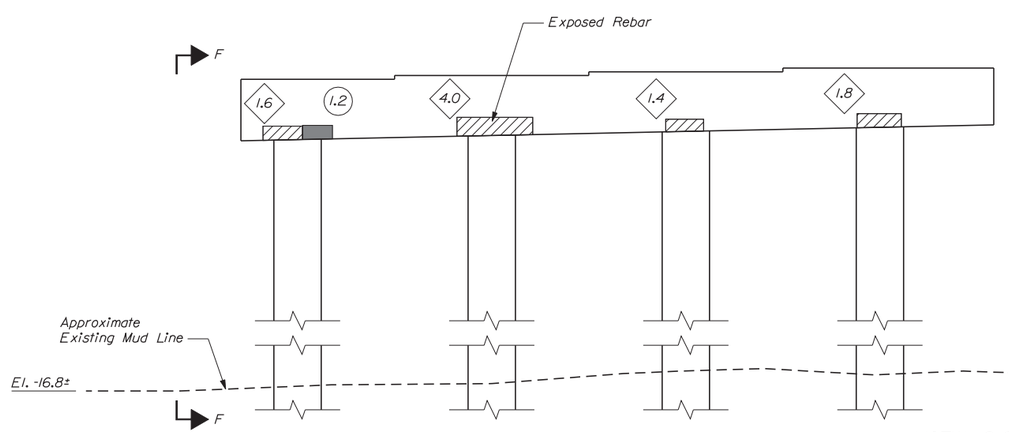

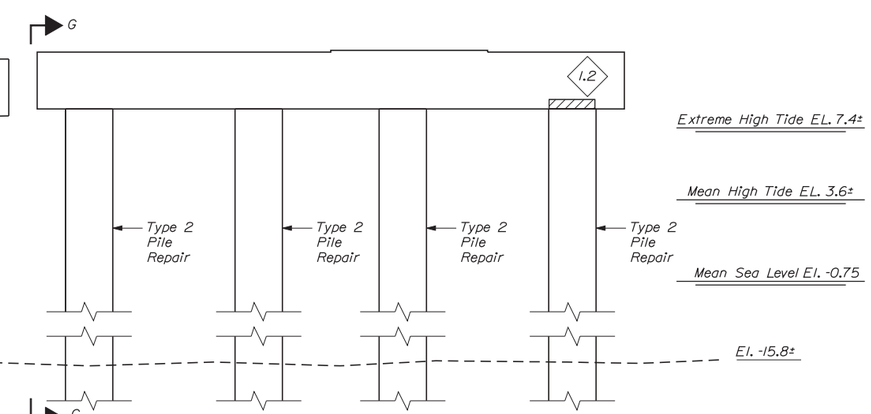

VIEW C-C

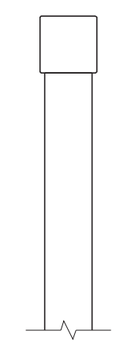

VIEW G-G

Scale: 1/4" = 1'-0"

No.	Revision	By	Date

Designed by:

Vanasse Hangen Brustlin, Inc.

CONSULTANT PROJECT MANAGER: T. BRYANT

	By	Date		By	Date
Designed	RSB	1/14	Checked	KJG	1/14
Drawn	MJB	1/14	In Charge of	TSB	1/14

VANASSE HANGEN BRUSTLIN, INC.
500 Southborough Dr.
Suite 105B
South Portland, ME 04106
TEL (207) 889-3150
FAX (207) 253-5596

MAINE TURNPIKE

THE GOLD STAR MEMORIAL HIGHWAY

MTA PROJECT MANAGER: Ralph C. Norwood IV, P.E.

BRIDGE REHABILITATION
YORK RIVER BRIDGES

NB BRIDGE PIER BENT 3
CONCRETE REPAIR AREAS

SHEET NUMBER:

CONTRACT: 2014.05

Filename: ...\st\planset\067_pier_NB_03.dgn

Date:1/23/2014

KEY:

- Approximate Limits of Delamination
- Approximate Limits of Spall
- # Square Foot Area of Delamination (<7.9" Deep unless otherwise noted)
- # Square Foot Area of Spall (<7.9" Deep unless otherwise noted)
- # Linear Foot of Crack

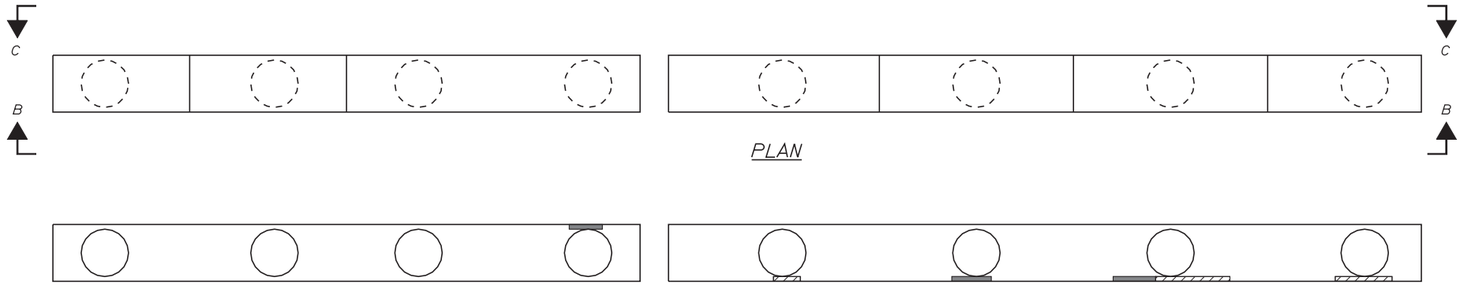

PLAN

VIEW A-A

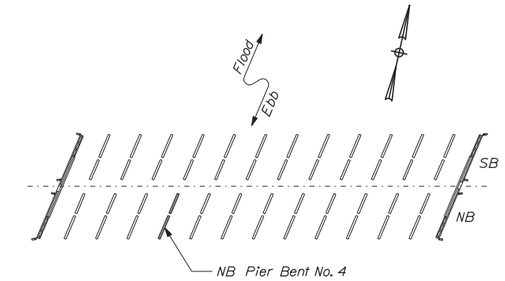

KEY PLAN

NOTE:

1. See Typical Concrete Repair Details Sheet for Concrete Repair Details.

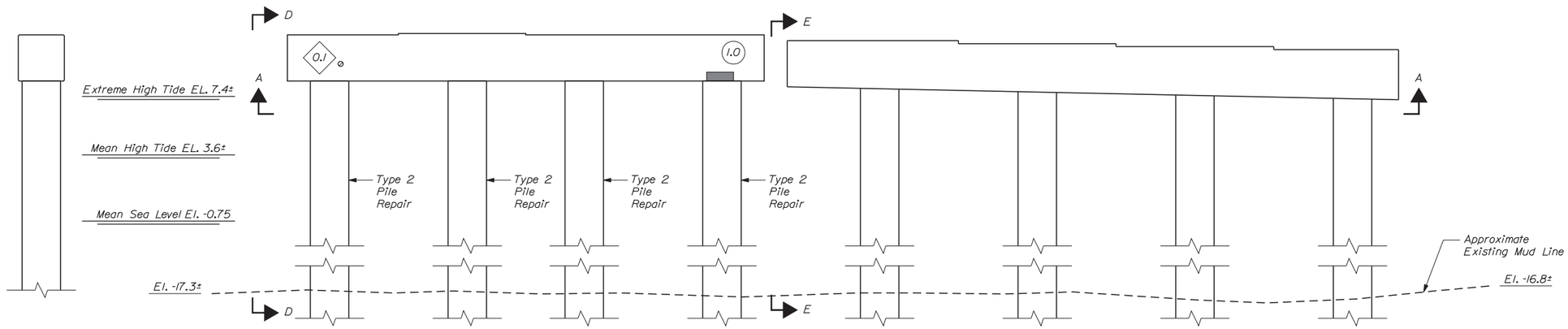

VIEW D-D

VIEW B-B

VIEW E-E

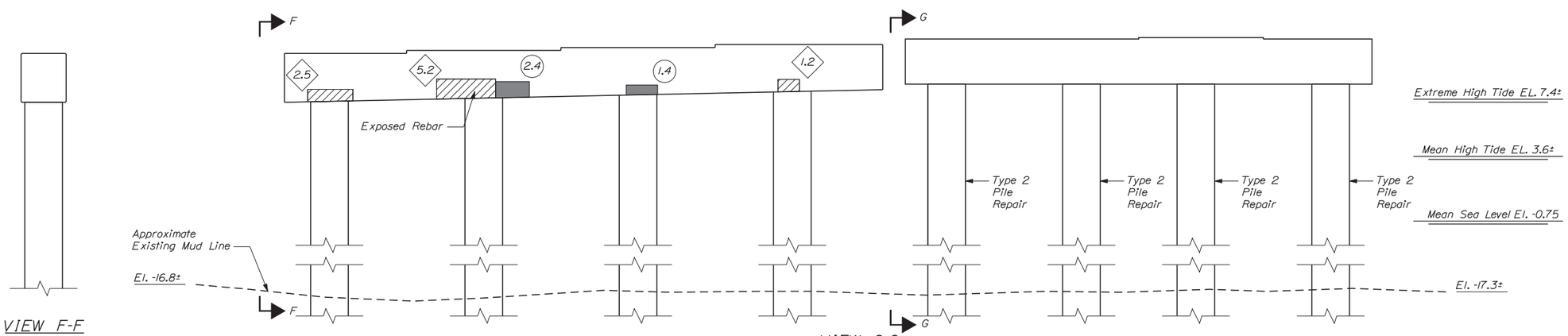

VIEW F-F

VIEW C-C

VIEW G-G

Scale: 1/4" = 1'-0"

No.	Revision	By	Date

Designed by:

Vanasse Hangen Brustlin, Inc.

CONSULTANT PROJECT MANAGER: T. BRYANT

	By	Date		By	Date
Designed	RSB	1/14	Checked	KJG	1/14
Drawn	MJB	1/14	In Charge of	TSB	1/14

VANASSE HANGEN BRUSTLIN, INC.
500 Southborough Dr.
Suite 105B
South Portland, ME 04106
TEL (207) 889-3150
FAX (207) 253-5596

MAINE TURNPIKE

THE GOLD STAR MEMORIAL HIGHWAY

MTA PROJECT MANAGER: Ralph C. Norwood IV, P.E.

BRIDGE REHABILITATION
YORK RIVER BRIDGES

NB BRIDGE PIER BENT 4
CONCRETE REPAIR AREAS

SHEET NUMBER:

CONTRACT: 2014.05

Filename: ...\st\planset\068_pier_NB_04.dgn

Date:1/23/2014

KEY:

- Approximate Limits of Delamination
- Approximate Limits of Spall
- # Square Foot Area of Delamination (<7.9" Deep unless otherwise noted)
- # Square Foot Area of Spall (<7.9" Deep unless otherwise noted)
- # Linear Foot of Crack

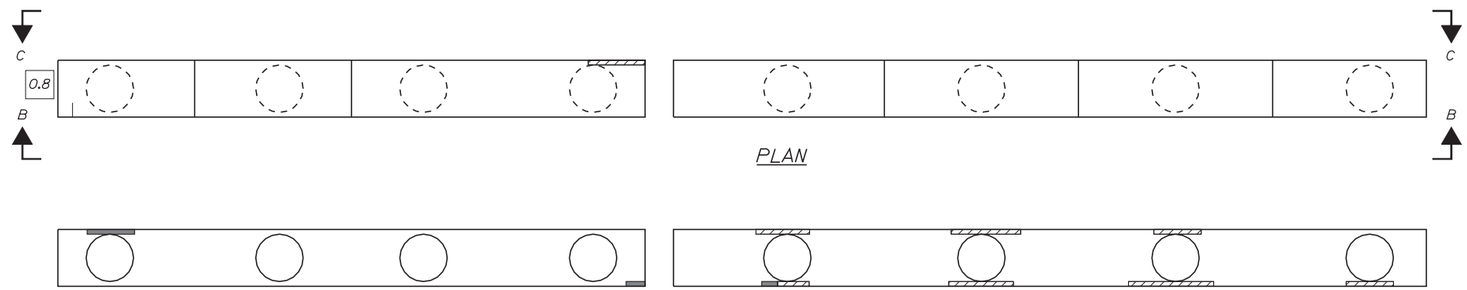

PLAN

VIEW A-A

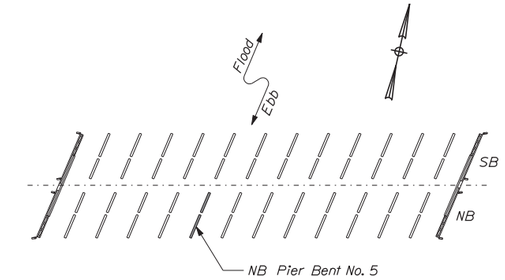

KEY PLAN

NOTE:

1. See Typical Concrete Repair Details Sheet for Concrete Repair Details.

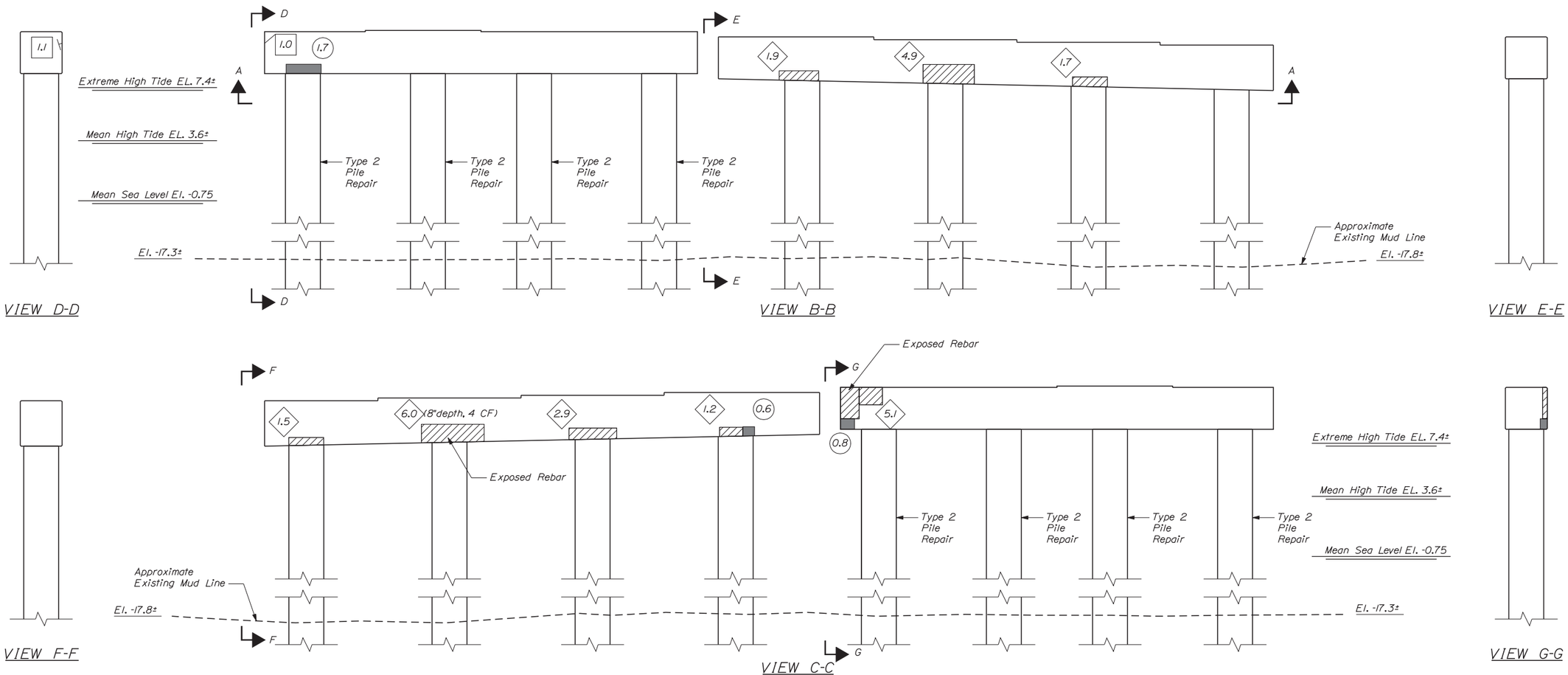

Scale: 1/4" = 1'-0"

No.	Revision	By	Date

Designed by:

VHB Vanasse Hangen Brustlin, Inc.

CONSULTANT PROJECT MANAGER: T. BRYANT

	By	Date		By	Date
Designed	RSB	1/14	Checked	KJG	1/14
Drawn	MJB	1/14	In Charge of	TSB	1/14

VANASSE HANGEN BRUSTLIN, INC.
500 Southborough Dr.
Suite 105B
South Portland, ME 04106
TEL (207) 889-3150
FAX (207) 253-5596

MAINE TURNPIKE

THE GOLD STAR MEMORIAL HIGHWAY

MTA PROJECT MANAGER: Ralph C. Norwood IV, P.E.

BRIDGE REHABILITATION
YORK RIVER BRIDGES

NB BRIDGE PIER BENT 5
CONCRETE REPAIR AREAS

SHEET NUMBER:

CONTRACT: 2014.05

Filename: ...\st\planset\069_pier_NB_05.dgn

Date:1/23/2014

KEY:

- Approximate Limits of Delamination
- Approximate Limits of Spall
- # Square Foot Area of Delamination (<7.9" Deep unless otherwise noted)
- # Square Foot Area of Spall (<7.9" Deep unless otherwise noted)
- # Linear Foot of Crack

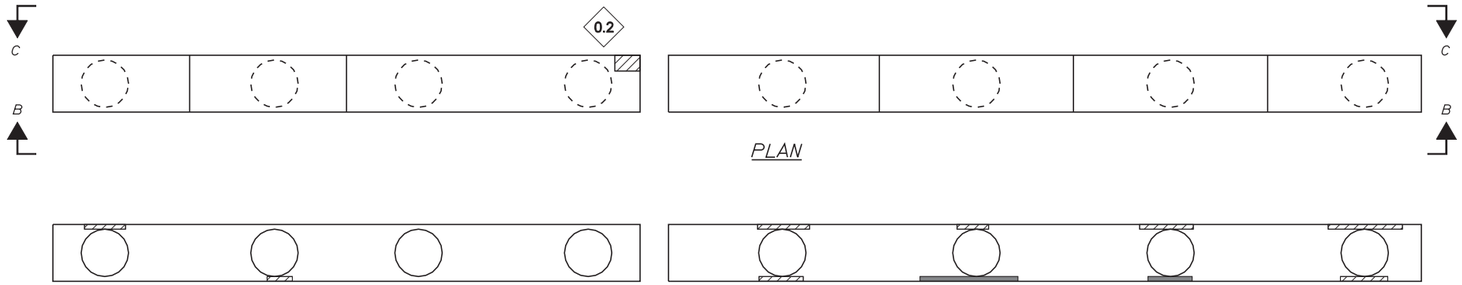

VIEW A-A

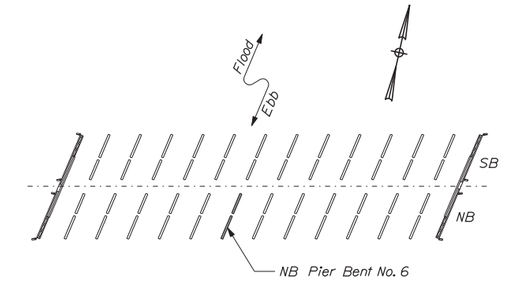

KEY PLAN

NOTE:

1. See Typical Concrete Repair Details Sheet for Concrete Repair Details.

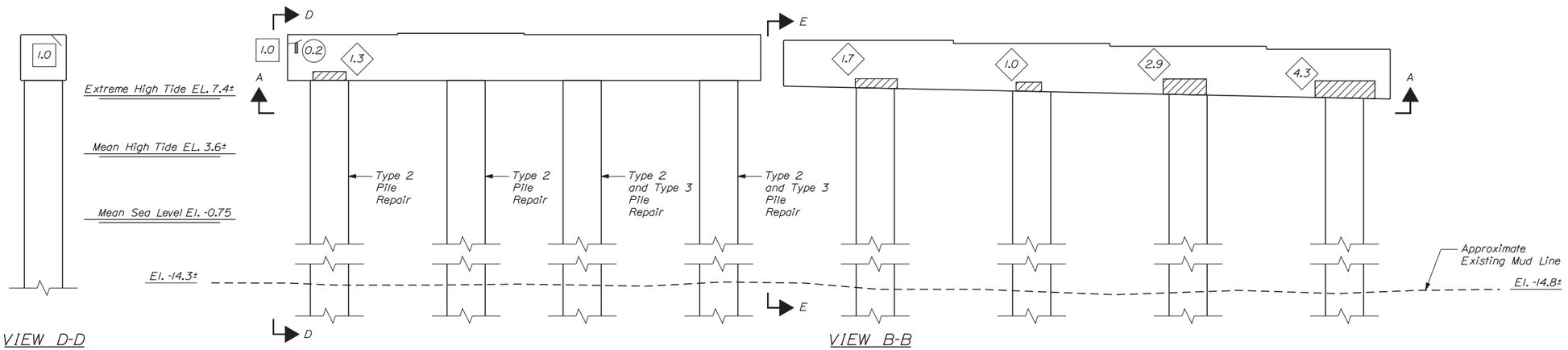

VIEW D-D

VIEW B-B

VIEW E-E

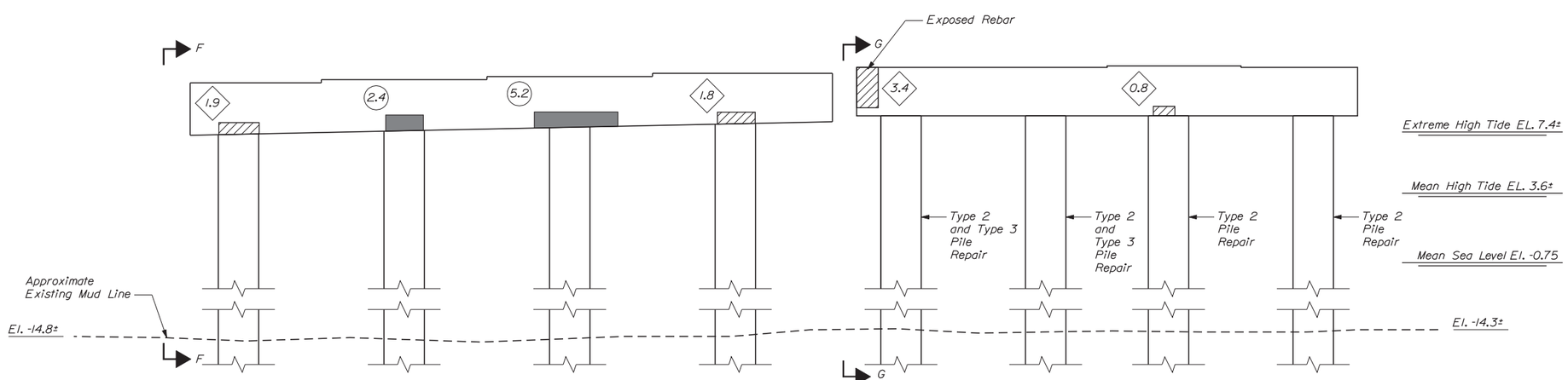

VIEW F-F

VIEW C-C

VIEW G-G

Scale: 1/4" = 1'-0"

Filename: ...\st\planset\070_pier_NB_06.dgn

No.	Revision	By	Date

Scale: 1/4" = 1'-0"

Designed by:

VHB Vanasse Hangen Brustlin, Inc.

CONSULTANT PROJECT MANAGER: T. BRYANT

	By	Date		By	Date
Designed	RSB	1/14	Checked	KJG	1/14
Drawn	MJB	1/14	In Charge of	TSB	1/14

VANASSE HANGEN BRUSTLIN, INC.
500 Southborough Dr.
Suite 105B
South Portland, ME 04106
TEL (207) 889-3150
FAX (207) 253-5596

MAINE TURNPIKE

THE GOLD STAR MEMORIAL HIGHWAY

MTA PROJECT MANAGER: Ralph C. Norwood IV, P.E.

BRIDGE REHABILITATION
YORK RIVER BRIDGES

NB BRIDGE PIER BENT 6
CONCRETE REPAIR AREAS

SHEET NUMBER:

CONTRACT: 2014.05

Date:1/23/2014

KEY:

- Approximate Limits of Delamination
- Approximate Limits of Spall
- # Square Foot Area of Delamination (<7.9" Deep unless otherwise noted)
- # Square Foot Area of Spall (<7.9" Deep unless otherwise noted)
- # Linear Foot of Crack

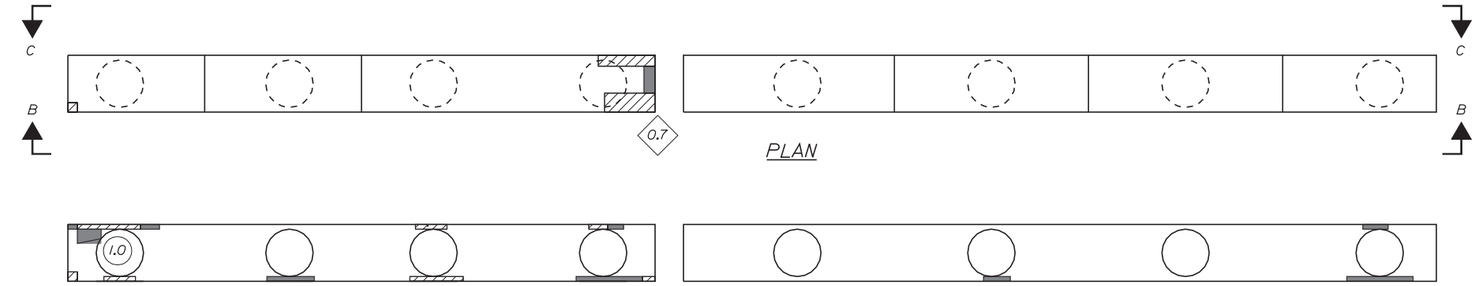

PLAN

VIEW A-A

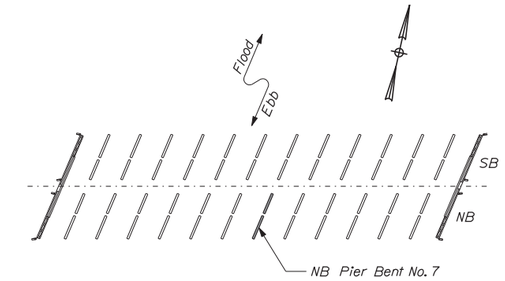

KEY PLAN

NOTE:

1. See Typical Concrete Repair Details Sheet for Concrete Repair Details.

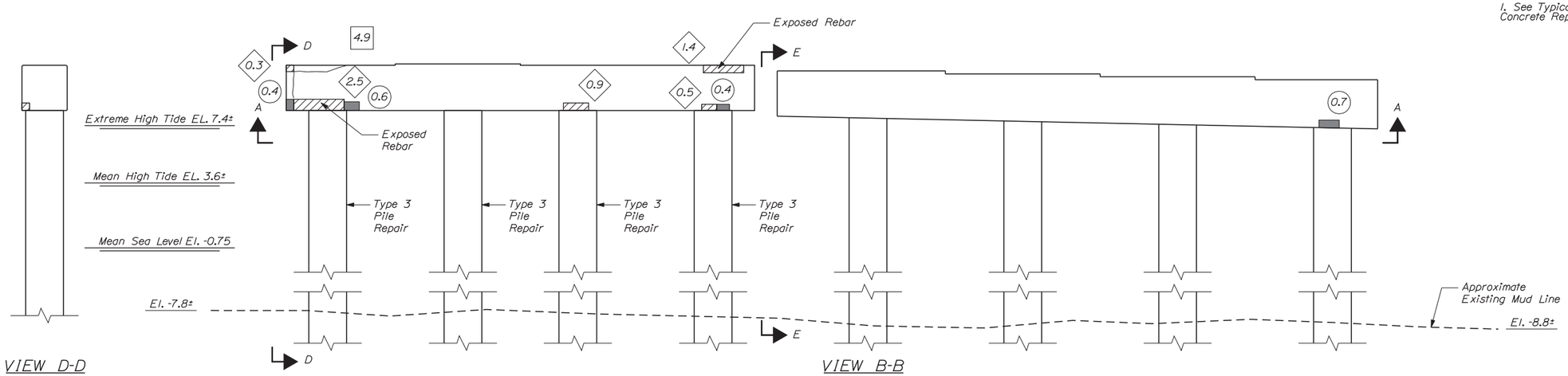

VIEW D-D

VIEW B-B

VIEW E-E

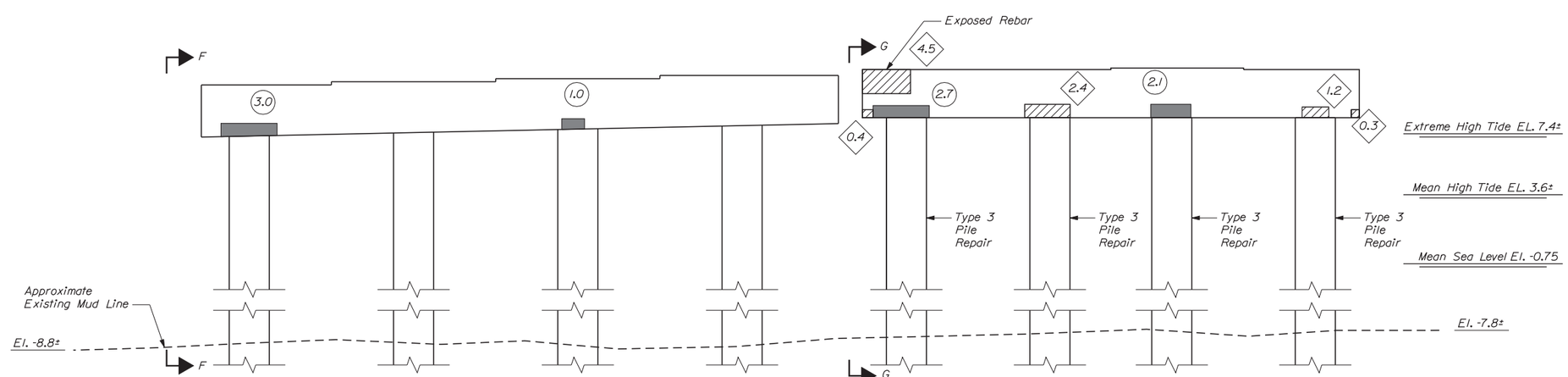

VIEW F-F

VIEW C-C

VIEW G-G

Scale: 1/4" = 1'-0"

No.	Revision	By	Date

Designed by:

VHB Vanasse Hangen Brustlin, Inc.

CONSULTANT PROJECT MANAGER: T. BRYANT

	By	Date		By	Date
Designed	RSB	1/14	Checked	KJG	1/14
Drawn	MJB	1/14	In Charge of	TSB	1/14

VANASSE HANGEN BRUSTLIN, INC.
500 Southborough Dr.
Suite 105B
South Portland, ME 04106
TEL (207) 889-3150
FAX (207) 253-5596

MAINE TURNPIKE

THE GOLD STAR MEMORIAL HIGHWAY

MTA PROJECT MANAGER: Ralph C. Norwood IV, P.E.

BRIDGE REHABILITATION
YORK RIVER BRIDGES

NB BRIDGE PIER BENT 7
CONCRETE REPAIR AREAS

SHEET NUMBER:

CONTRACT: 2014.05

Filename: ...\st\planset\071_pier_NB_07.dgn

Date:1/23/2014

KEY:

- Approximate Limits of Delamination
- Approximate Limits of Spall
- # Square Foot Area of Delamination (<7.9" Deep unless otherwise noted)
- # Square Foot Area of Spall (<7.9" Deep unless otherwise noted)
- # Linear Foot of Crack

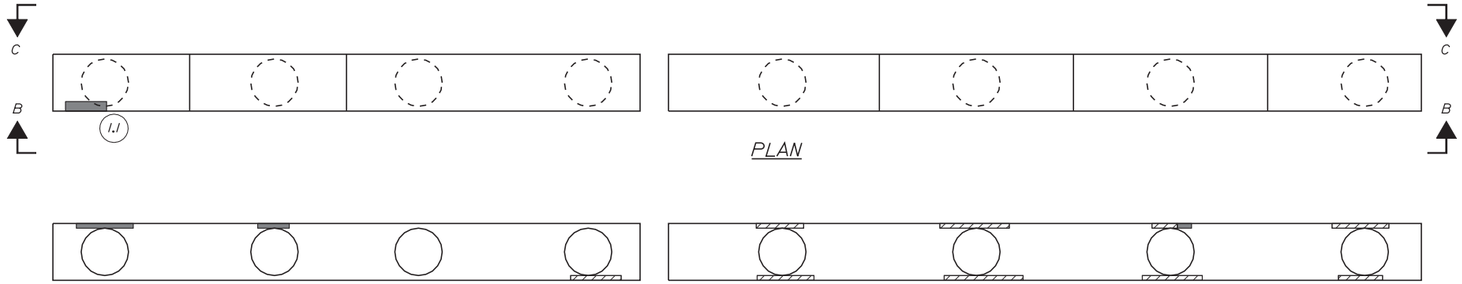

PLAN

VIEW A-A

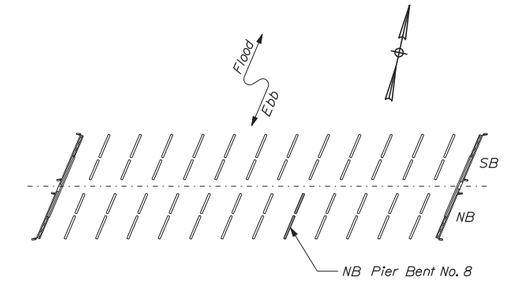

KEY PLAN

NOTE:

1. See Typical Concrete Repair Details Sheet for Concrete Repair Details.

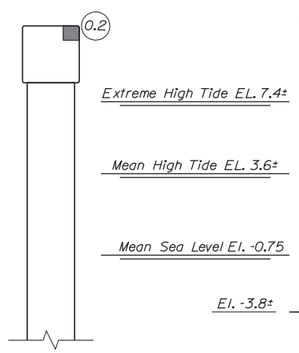

VIEW D-D

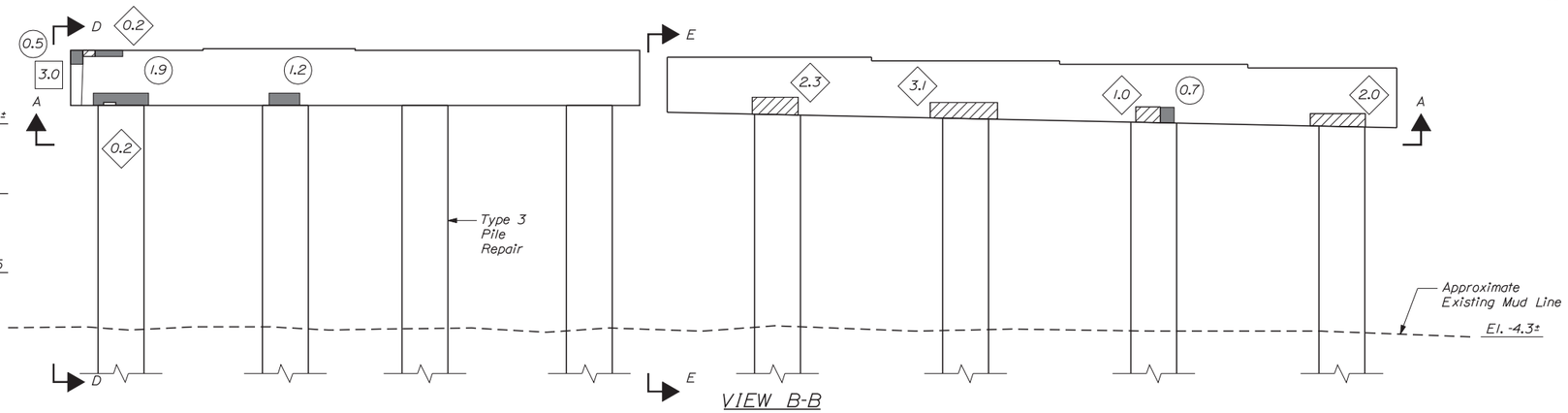

VIEW B-B

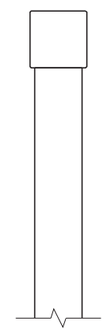

VIEW E-E

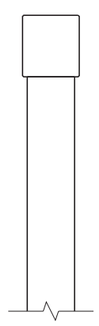

VIEW F-F

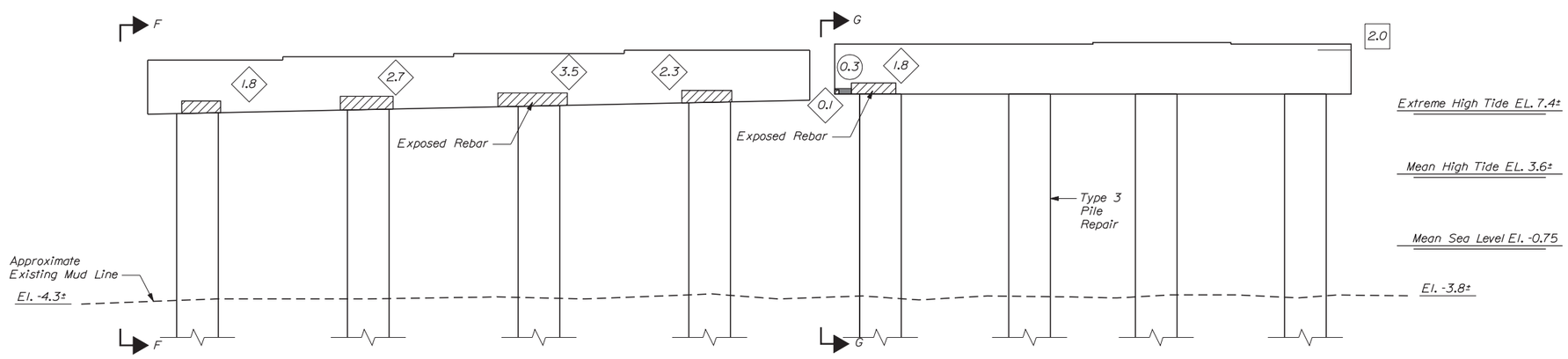

VIEW C-C

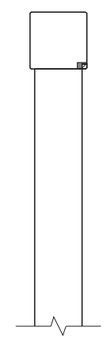

VIEW G-G

Filename: ...\st\planset\072_pier_NB_08.dgn

Scale: 1/4" = 1'-0"

No.	Revision	By	Date

Designed by:

VHB Vanasse Hangen Brustlin, Inc.

CONSULTANT PROJECT MANAGER: T. BRYANT

	By	Date		By	Date
Designed	RSB	1/14	Checked	KJG	1/14
Drawn	MJB	1/14	In Charge of	TSB	1/14

VANASSE HANGEN BRUSTLIN, INC.
500 Southborough Dr.
Suite 105B
South Portland, ME 04106
TEL (207) 889-3150
FAX (207) 253-5596

MAINE TURNPIKE

THE GOLD STAR MEMORIAL HIGHWAY

MTA PROJECT MANAGER: Ralph C. Norwood IV, P.E.

BRIDGE REHABILITATION
YORK RIVER BRIDGES

NB BRIDGE PIER BENT 8
CONCRETE REPAIR AREAS

CONTRACT: 2014.05

SHEET NUMBER:

KEY:

- Approximate Limits of Delamination
- Approximate Limits of Spall
- # Square Foot Area of Delamination (<7.9" Deep unless otherwise noted)
- # Square Foot Area of Spall (<7.9" Deep unless otherwise noted)
- # Linear Foot of Crack

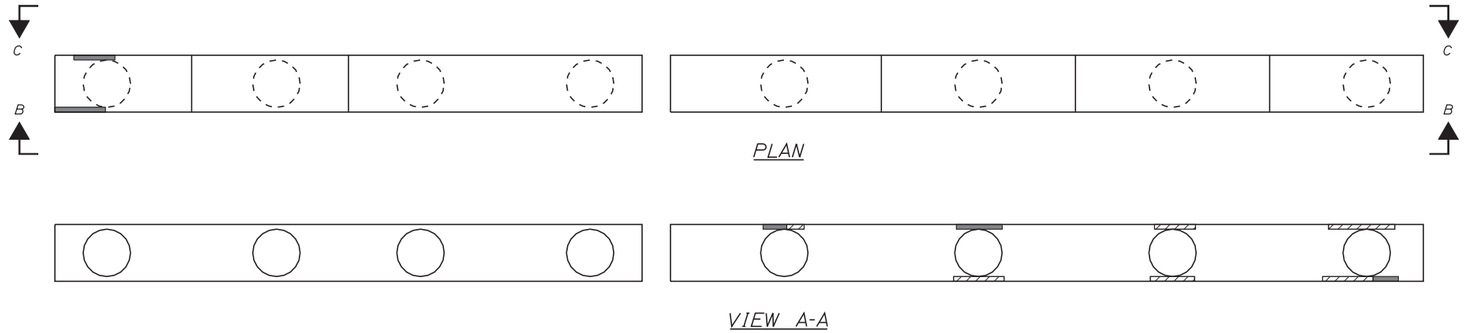

PLAN

VIEW A-A

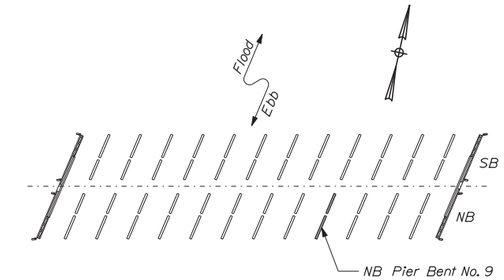

KEY PLAN

NOTE:

1. See Typical Concrete Repair Details Sheet for Concrete Repair Details.

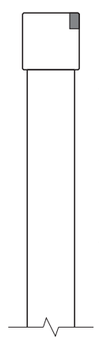

VIEW D-D

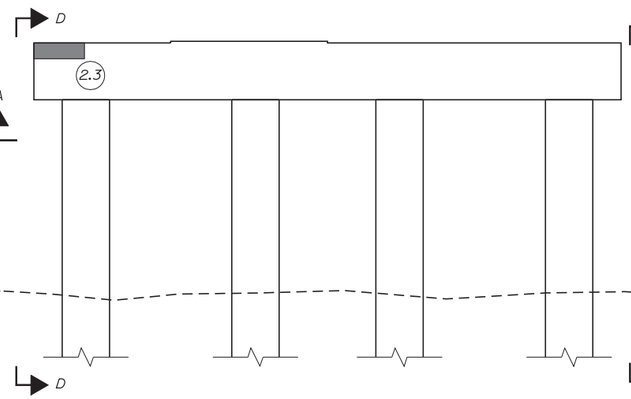

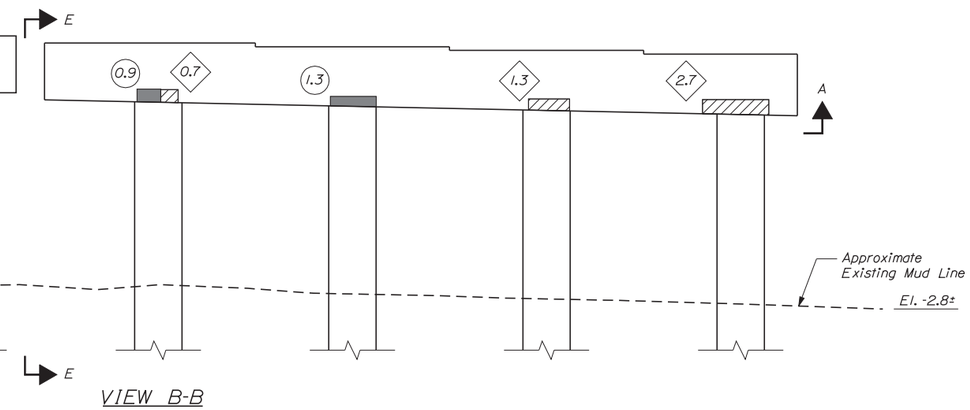

VIEW B-B

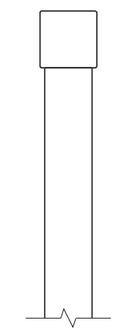

VIEW E-E

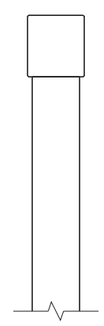

VIEW F-F

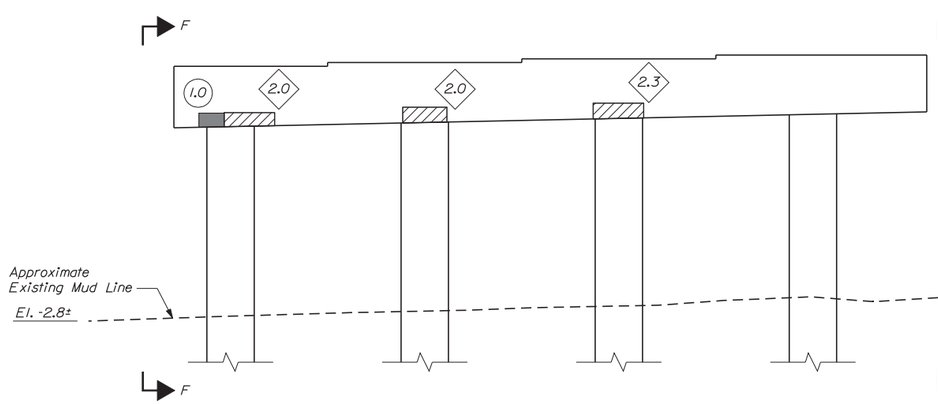

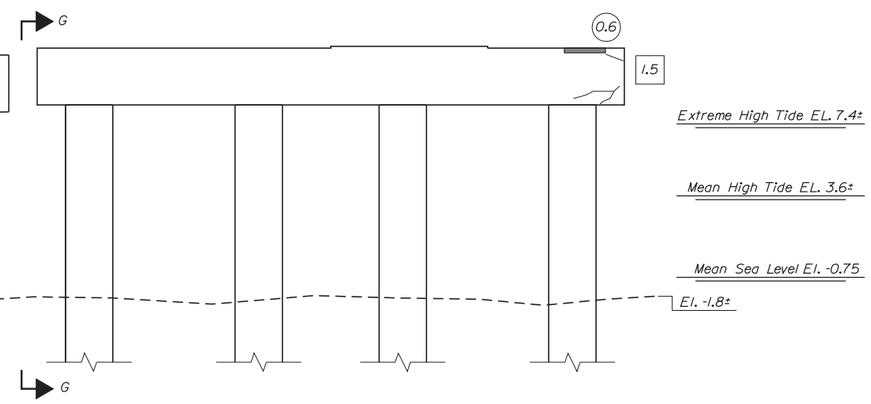

VIEW C-C

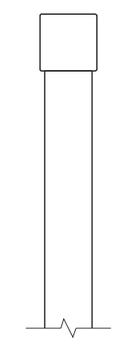

VIEW G-G

Date:1/23/2014

Filename: ...\st\planset\073_pier_NB_09.dgn

Scale: 1/4" = 1'-0"

No.	Revision	By	Date

Designed by:

Vanasse Hangen Brustlin, Inc.

CONSULTANT PROJECT MANAGER: T. BRYANT

	By	Date		By	Date
Designed	RSB	1/14	Checked	KJG	1/14
Drawn	MJB	1/14	In Charge of	TSB	1/14

VANASSE HANGEN BRUSTLIN, INC.
500 Southborough Dr.
Suite 105B
South Portland, ME 04106
TEL (207) 889-3150
FAX (207) 253-5596

MAINE TURNPIKE

THE GOLD STAR MEMORIAL HIGHWAY

MTA PROJECT MANAGER: Ralph C. Norwood IV, P.E.

BRIDGE REHABILITATION
YORK RIVER BRIDGES

NB BRIDGE PIER BENT 9
CONCRETE REPAIR AREAS

SHEET NUMBER:

CONTRACT: 2014.05

73 OF 103

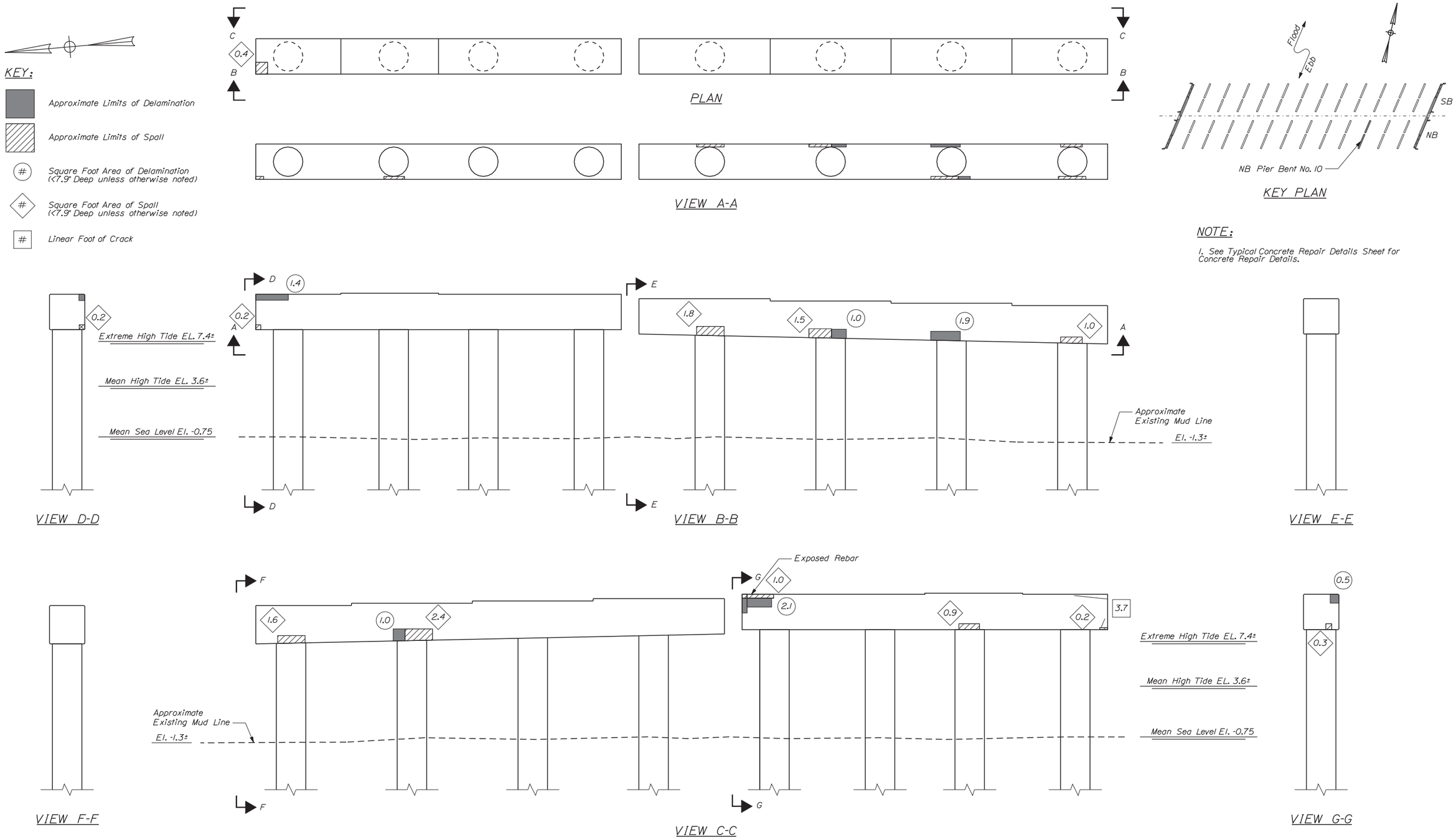

Date:1/23/2014

Filename: ...\st\planset\074_pier_NB_10.dgn

Scale: 1/4" = 1'-0"

No.	Revision	By	Date

Designed by:

Vanasse Hangen Brustlin, Inc.

CONSULTANT PROJECT MANAGER: T. BRYANT

	By	Date		By	Date
Designed	RSB	1/14	Checked	KJG	1/14
Drawn	BJM	1/14	In Charge of	TSB	1/14

VANASSE HANGEN BRUSTLIN, INC.
500 Southborough Dr.
Suite 105B
South Portland, ME 04106
TEL (207) 889-3150
FAX (207) 253-5596

MAINE TURNPIKE

THE GOLD STAR MEMORIAL HIGHWAY

MTA PROJECT MANAGER: Ralph C. Norwood IV, P.E.

BRIDGE REHABILITATION
YORK RIVER BRIDGES

NB BRIDGE PIER BENT 10
CONCRETE REPAIR AREAS

SHEET NUMBER:

CONTRACT: 2014.05

Date:1/23/2014

KEY:

- Approximate Limits of Delamination
- Approximate Limits of Spall
- # Square Foot Area of Delamination (<7.9" Deep unless otherwise noted)
- # Square Foot Area of Spall (<7.9" Deep unless otherwise noted)
- # Linear Foot of Crack

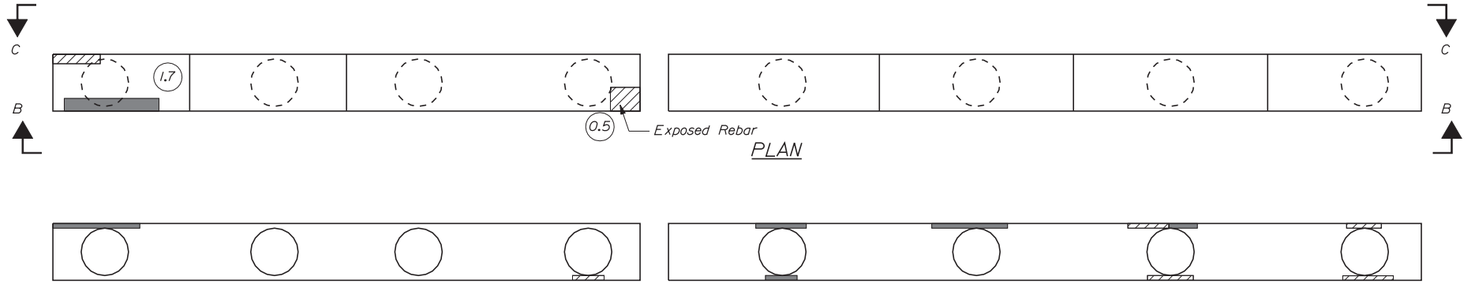

PLAN

VIEW A-A

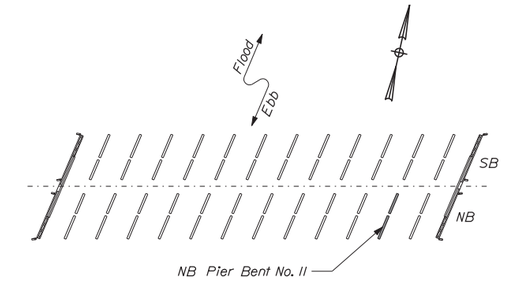

KEY PLAN

NOTE:

1. See Typical Concrete Repair Details Sheet for Concrete Repair Details.

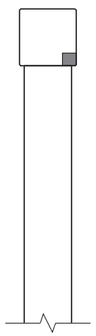

VIEW D-D

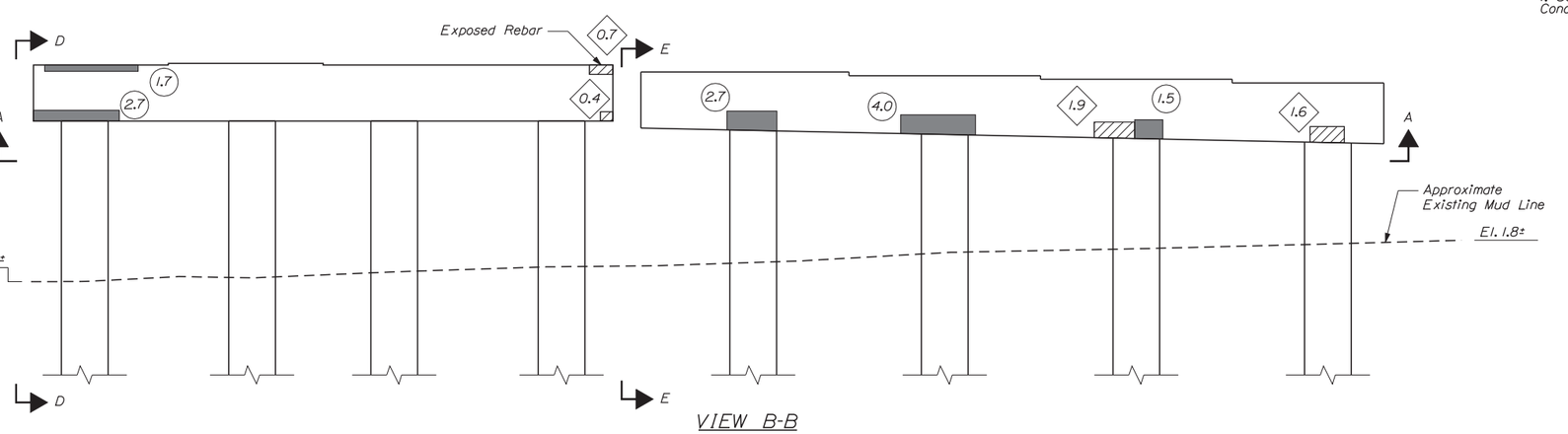

VIEW B-B

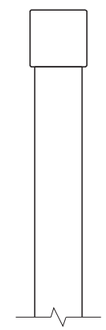

VIEW E-E

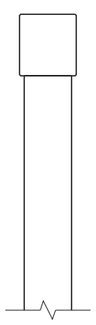

VIEW F-F

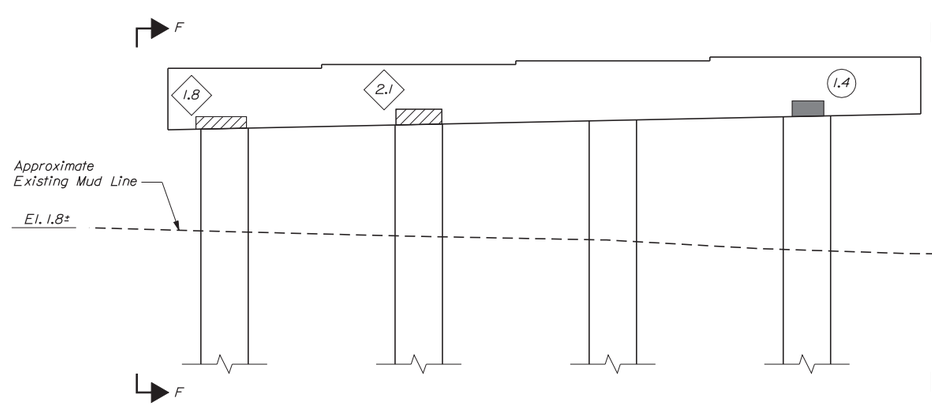

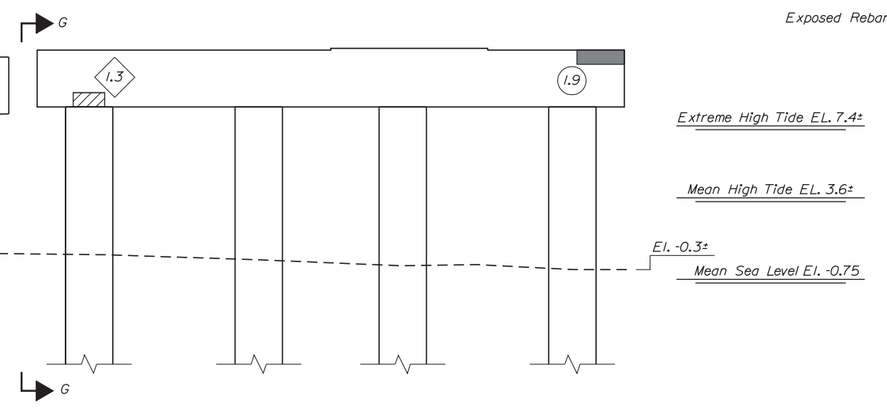

VIEW C-C

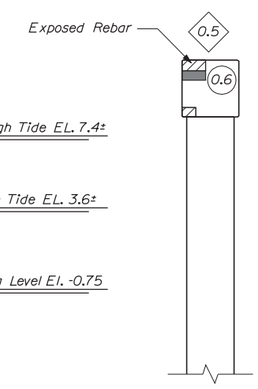

VIEW G-G

Filename: ...\st\planset\075_pier_NB_11.dgn

Scale: 1/4" = 1'-0"

No.	Revision	By	Date

Designed by:

VHB Vanasse Hangen Brustlin, Inc.

CONSULTANT PROJECT MANAGER: T. BRYANT

	By	Date		By	Date
Designed	RSB	1/14	Checked	KJG	1/14
Drawn	MJB	1/14	In Charge of	TSB	1/14

VANASSE HANGEN BRUSTLIN, INC.
500 Southborough Dr.
Suite 105B
South Portland, ME 04106
TEL (207) 889-3150
FAX (207) 253-5596

MAINE TURNPIKE

THE GOLD STAR MEMORIAL HIGHWAY

MTA PROJECT MANAGER: Ralph C. Norwood IV, P.E.

BRIDGE REHABILITATION
YORK RIVER BRIDGES

NB BRIDGE PIER BENT 11
CONCRETE REPAIR AREAS

SHEET NUMBER:

CONTRACT: 2014.05

Date:1/23/2014

KEY:

- Approximate Limits of Delamination
- Approximate Limits of Spall
- # Square Foot Area of Delamination (<7.9" Deep unless otherwise noted)
- # Square Foot Area of Spall (<7.9" Deep unless otherwise noted)
- # Linear Foot of Crack

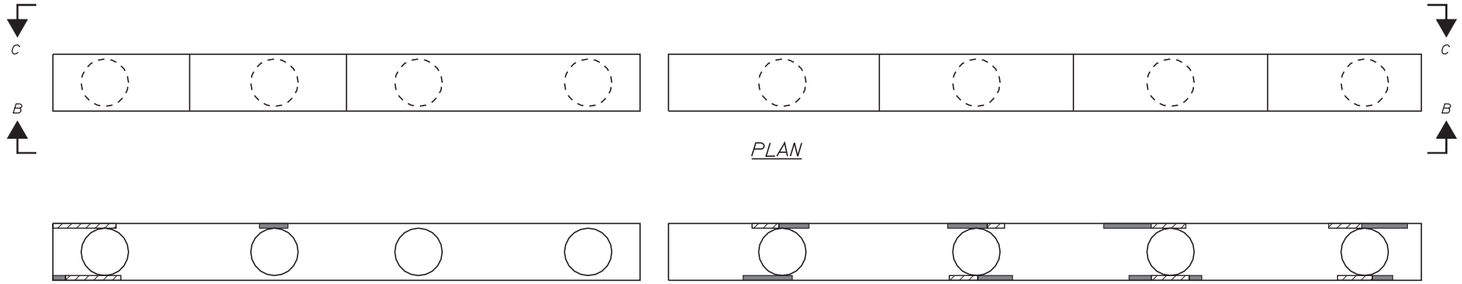

PLAN

VIEW A-A

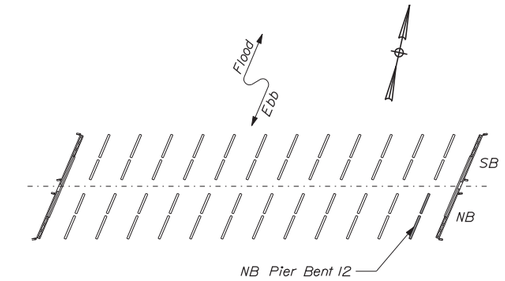

KEY PLAN

NOTE:

1. See Typical Concrete Repair Details Sheet for Concrete Repair Details.

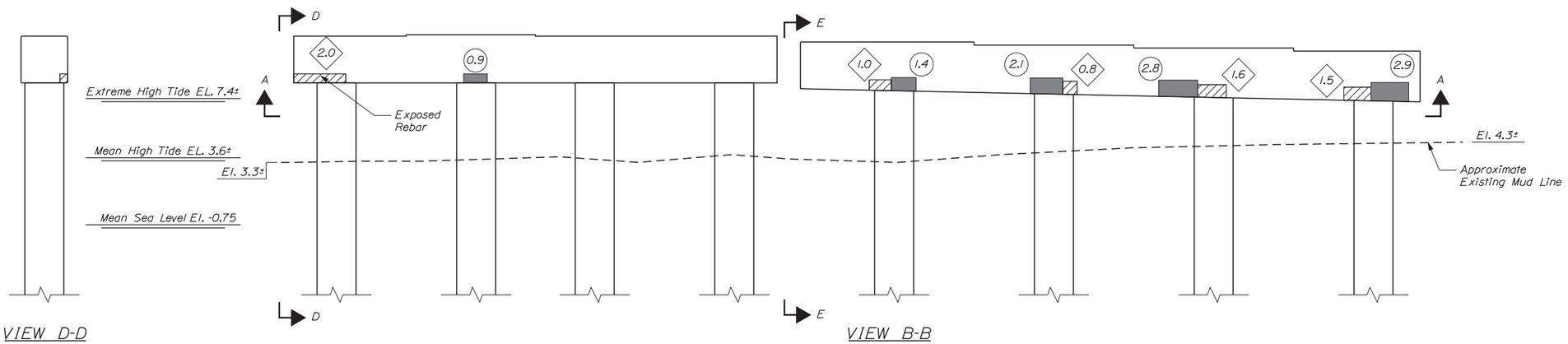

VIEW D-D

VIEW B-B

VIEW E-E

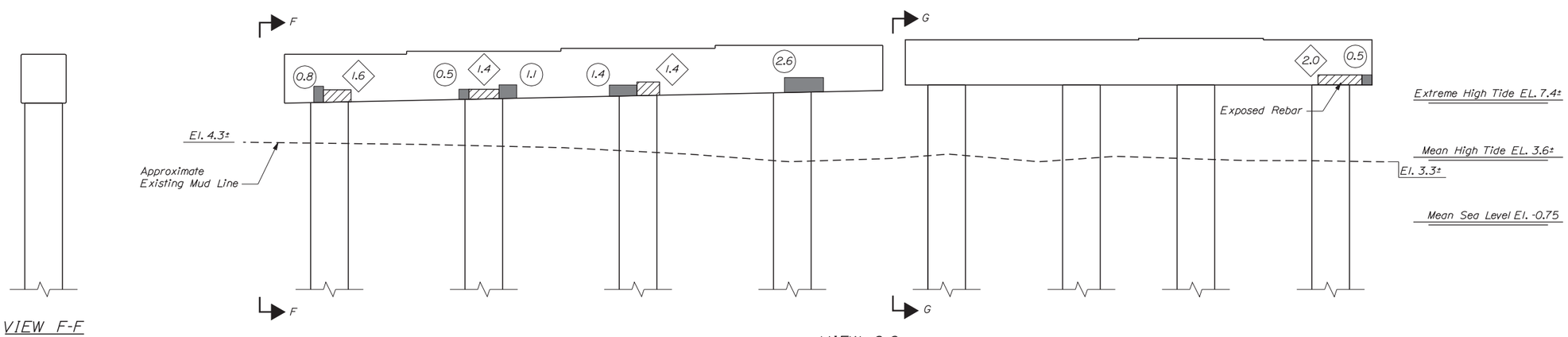

VIEW F-F

VIEW C-C

VIEW G-G

Filename: ...\st\planset\076_pier_NB_12.dgn

Scale: 1/4" = 1'-0"

No.	Revision	By	Date

Designed by:

VHB Vanasse Hangen Brustlin, Inc.

CONSULTANT PROJECT MANAGER: T. BRYANT

	By	Date		By	Date
Designed	RSB	1/14	Checked	KJG	1/14
Drawn	MJB	1/14	In Charge of	TSB	1/14

VANASSE HANGEN BRUSTLIN, INC.
500 Southborough Dr.
Suite 105B
South Portland, ME 04106
TEL (207) 889-3150
FAX (207) 253-5596

MAINE TURNPIKE

THE GOLD STAR MEMORIAL HIGHWAY

MTA PROJECT MANAGER: Ralph C. Norwood IV, P.E.

BRIDGE REHABILITATION
YORK RIVER BRIDGES

NB BRIDGE PIER BENT 12
CONCRETE REPAIR AREAS

SHEET NUMBER:

CONTRACT: 2014.05

KEY:

- Approximate Limits of Delamination
- Approximate Limits of Spall
- # Square Foot Area of Delamination (<7.9" Deep unless otherwise noted)
- # Square Foot Area of Spall (<7.9" Deep unless otherwise noted)
- # Linear Foot of Crack

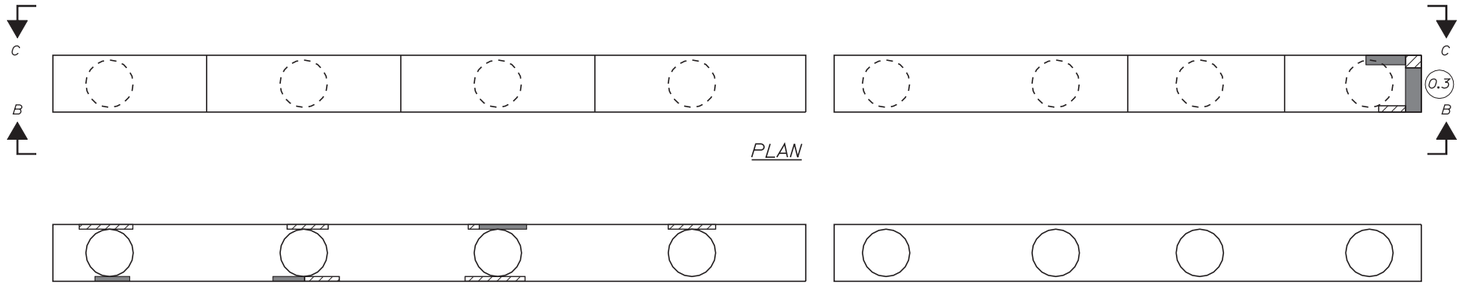

PLAN

VIEW A-A

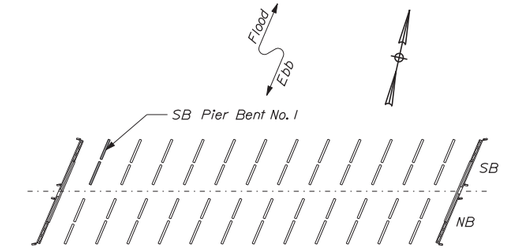

KEY PLAN

NOTE:

1. See Typical Concrete Repair Details Sheet for Concrete Repair Details.

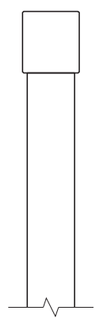

VIEW D-D

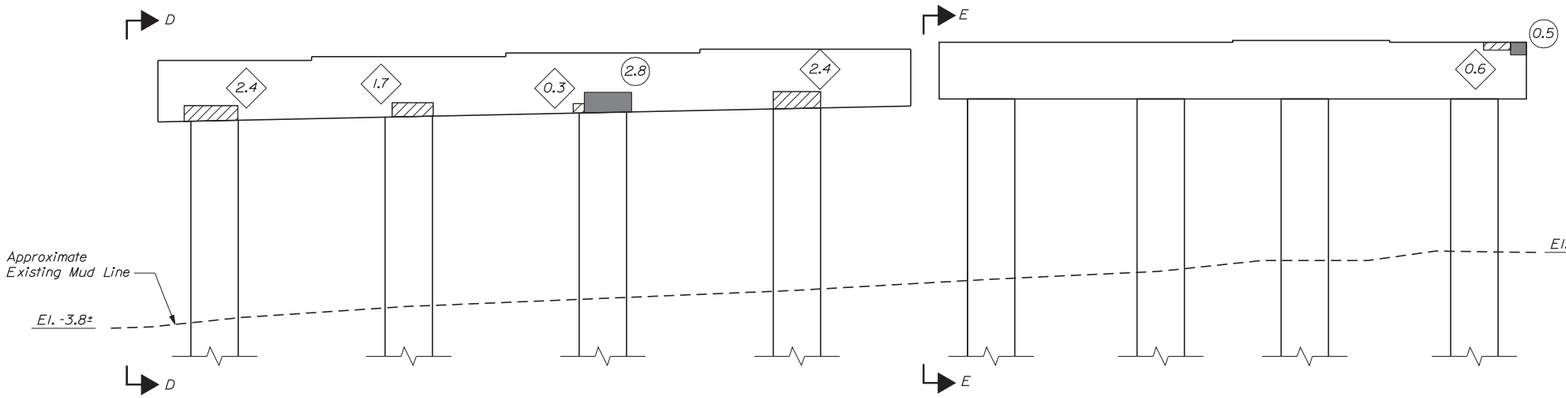

VIEW B-B

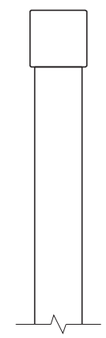

VIEW E-E

VIEW F-F

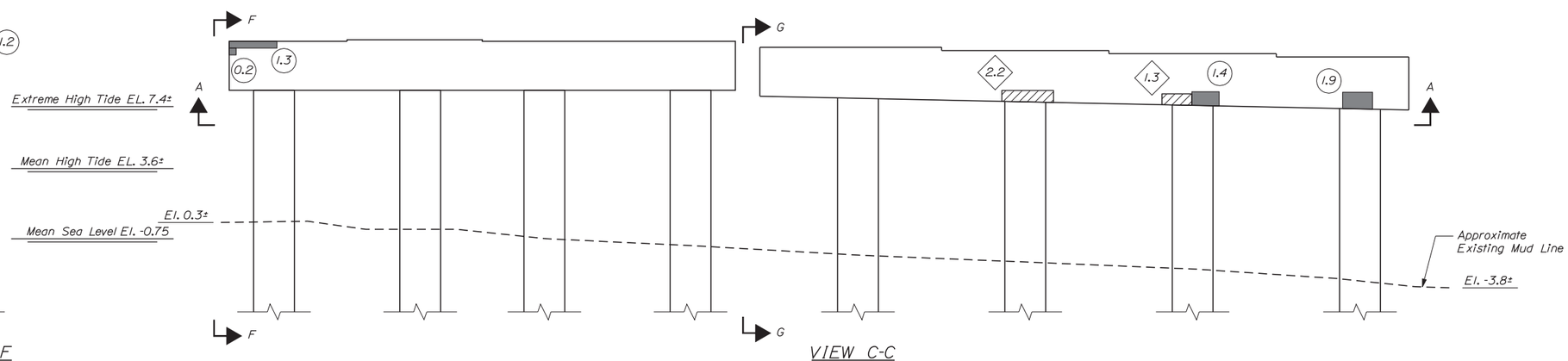

VIEW C-C

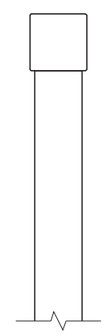

VIEW G-G

Date: 1/23/2014

Filename: ...\st\planset\077_pier_SB_01.dgn

Scale: 1/4" = 1'-0"

No.	Revision	By	Date

Designed by:

VHB Vanasse Hangen Brustlin, Inc.

CONSULTANT PROJECT MANAGER: T. BRYANT

	By	Date		By	Date
Designed	RSB	1/14	Checked	KJG	1/14
Drawn	MJB	1/14	In Charge of	TSB	1/14

VANASSE HANGEN BRUSTLIN, INC.
500 Southborough Dr.
Suite 105B
South Portland, ME 04106
TEL (207) 889-3150
FAX (207) 253-5596

MAINE TURNPIKE

THE GOLD STAR MEMORIAL HIGHWAY

MTA PROJECT MANAGER: Ralph C. Norwood IV, P.E.

BRIDGE REHABILITATION
YORK RIVER BRIDGES

SB BRIDGE PIER BENT 1
CONCRETE REPAIR AREAS

SHEET NUMBER:

CONTRACT: 2014.05

Date:1/23/2014

KEY:

- Approximate Limits of Delamination
- Approximate Limits of Spall
- # Square Foot Area of Delamination (<7.9" Deep unless otherwise noted)
- # Square Foot Area of Spall (<7.9" Deep unless otherwise noted)
- # Linear Foot of Crack

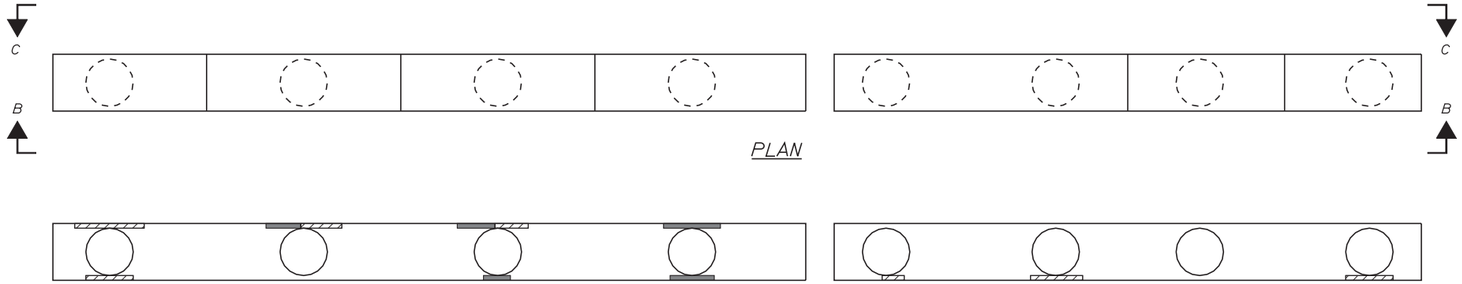

PLAN

VIEW A-A

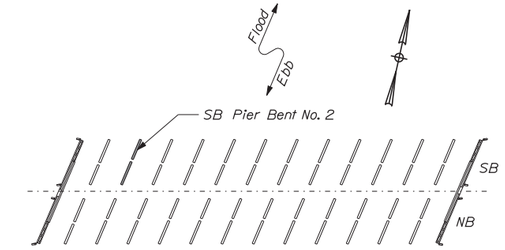

KEY PLAN

NOTE:

1. See Typical Concrete Repair Details Sheet for Concrete Repair Details.

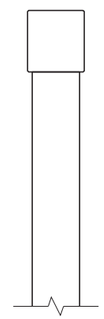

VIEW D-D

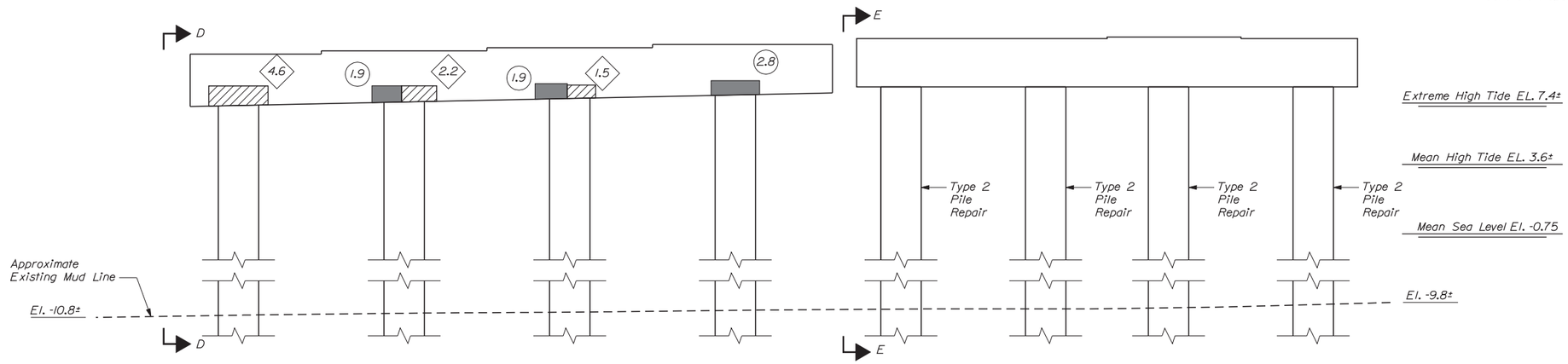

VIEW B-B

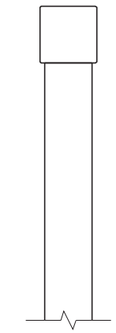

VIEW E-E

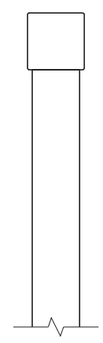

VIEW F-F

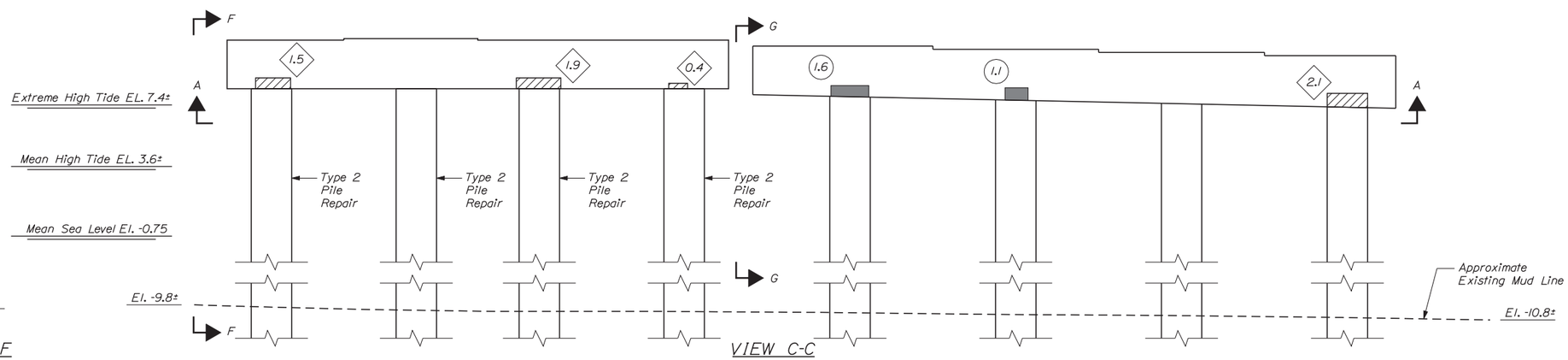

VIEW C-C

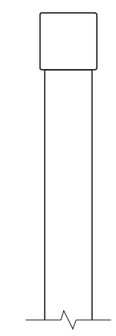

VIEW G-G

Scale: 1/4" = 1'-0"

No.	Revision	By	Date

Designed by:

Vanasse Hangen Brustlin, Inc.

CONSULTANT PROJECT MANAGER: T. BRYANT

	By	Date		By	Date
Designed	RSB	1/14	Checked	KJG	1/14
Drawn	MJB	1/14	In Charge of	TSB	1/14

VANASSE HANGEN BRUSTLIN, INC.
500 Southborough Dr.
Suite 105B
South Portland, ME 04106
TEL (207) 889-3150
FAX (207) 253-5596

MAINE TURNPIKE

THE GOLD STAR MEMORIAL HIGHWAY

MTA PROJECT MANAGER: Ralph C. Norwood IV, P.E.

BRIDGE REHABILITATION
YORK RIVER BRIDGES

SB BRIDGE PIER BENT 2
CONCRETE REPAIR AREAS

SHEET NUMBER:

CONTRACT: 2014.05

Filename: ...\st\planset\078_pier_SB_02.dgn

Date:1/23/2014

KEY:

- Approximate Limits of Delamination
- Approximate Limits of Spall
- # Square Foot Area of Delamination (<7.9" Deep unless otherwise noted)
- # Square Foot Area of Spall (<7.9" Deep unless otherwise noted)
- # Linear Foot of Crack

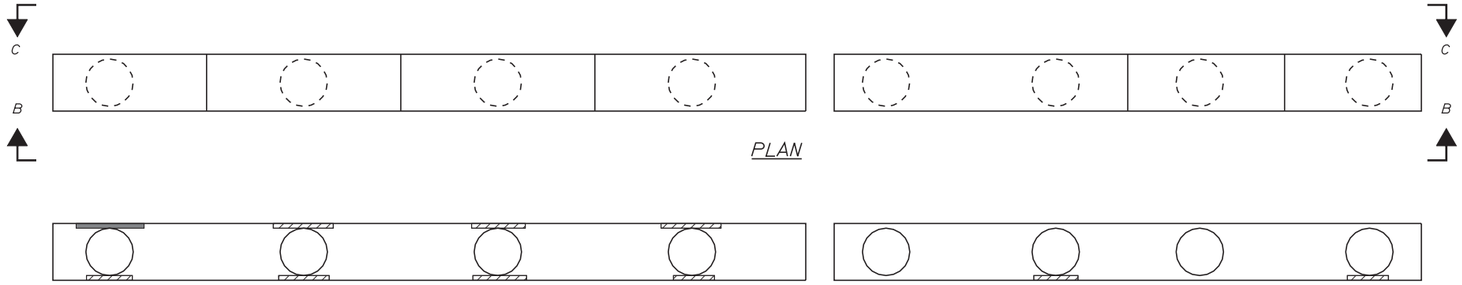

PLAN

VIEW A-A

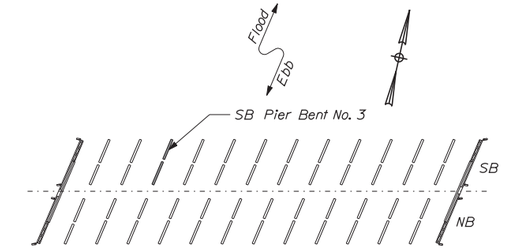

KEY PLAN

NOTE:

1. See Typical Concrete Repair Details Sheet for Concrete Repair Details.

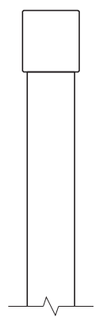

VIEW D-D

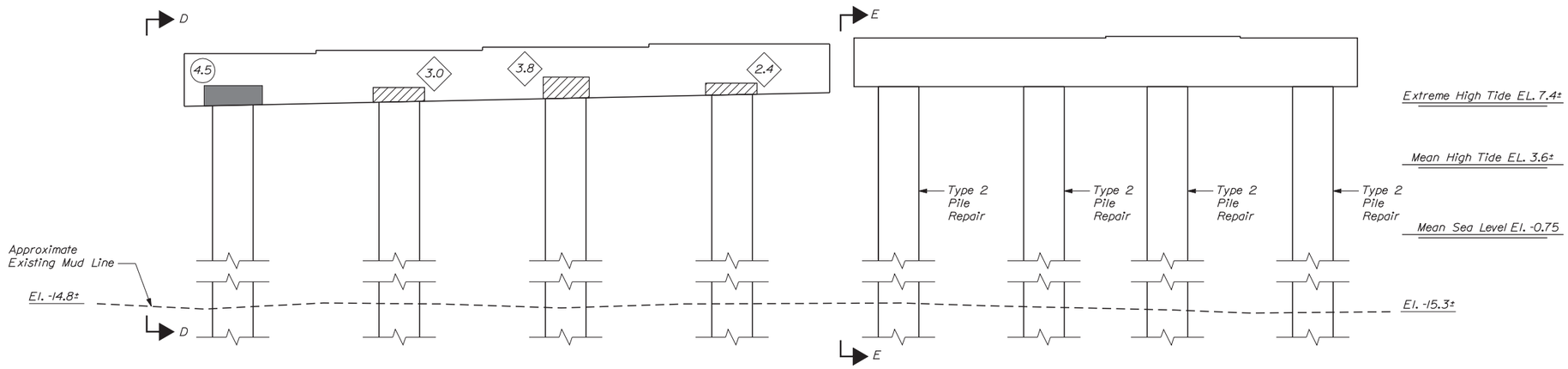

VIEW B-B

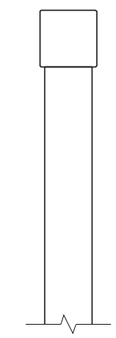

VIEW E-E

VIEW F-F

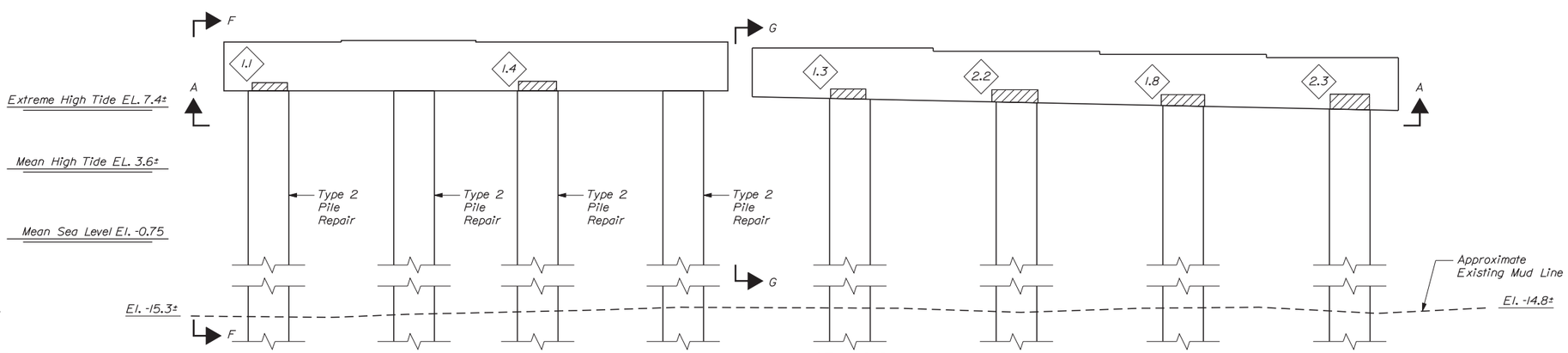

VIEW C-C

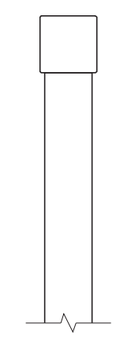

VIEW G-G

Scale: 1/4" = 1'-0"

No.	Revision	By	Date

Designed by:

Vanasse Hangen Brustlin, Inc.

CONSULTANT PROJECT MANAGER: T. BRYANT

	By	Date		By	Date
Designed	RSB	1/14	Checked	KJG	1/14
Drawn	MJB	1/14	In Charge of	TSB	1/14

VANASSE HANGEN BRUSTLIN, INC.
500 Southborough Dr.
Suite 105B
South Portland, ME 04106
TEL (207) 889-3150
FAX (207) 253-5596

MAINE TURNPIKE

THE GOLD STAR MEMORIAL HIGHWAY

MTA PROJECT MANAGER: Ralph C. Norwood IV, P.E.

BRIDGE REHABILITATION
YORK RIVER BRIDGES

SB BRIDGE PIER BENT 3
CONCRETE REPAIR AREAS

SHEET NUMBER:

CONTRACT: 2014.05

Filename: ...\st\planset\079_pier_SB_03.dgn

Date:1/23/2014

KEY:

- Approximate Limits of Delamination
- Approximate Limits of Spall
- # Square Foot Area of Delamination (<7.9" Deep unless otherwise noted)
- # Square Foot Area of Spall (<7.9" Deep unless otherwise noted)
- # Linear Foot of Crack

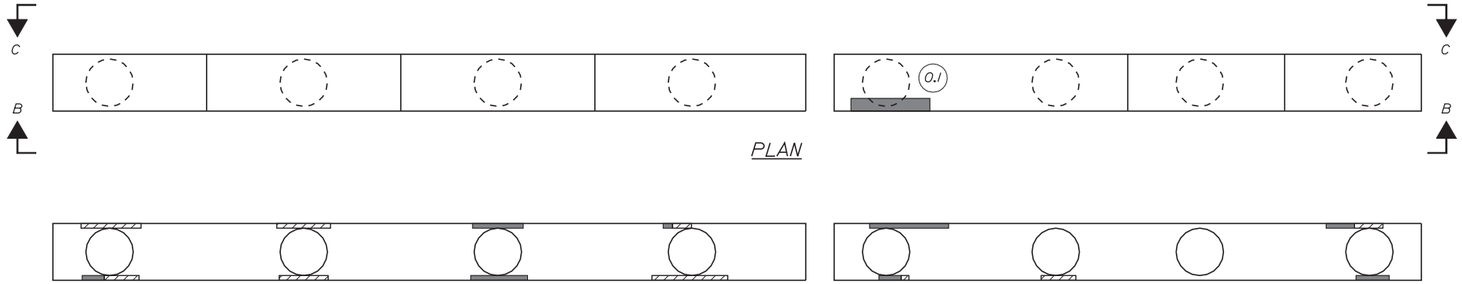

PLAN

VIEW A-A

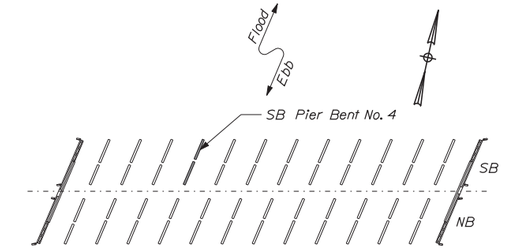

KEY PLAN

NOTE:

1. See Typical Concrete Repair Details Sheet for Concrete Repair Details.

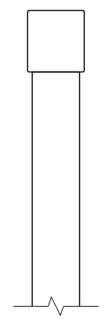

VIEW D-D

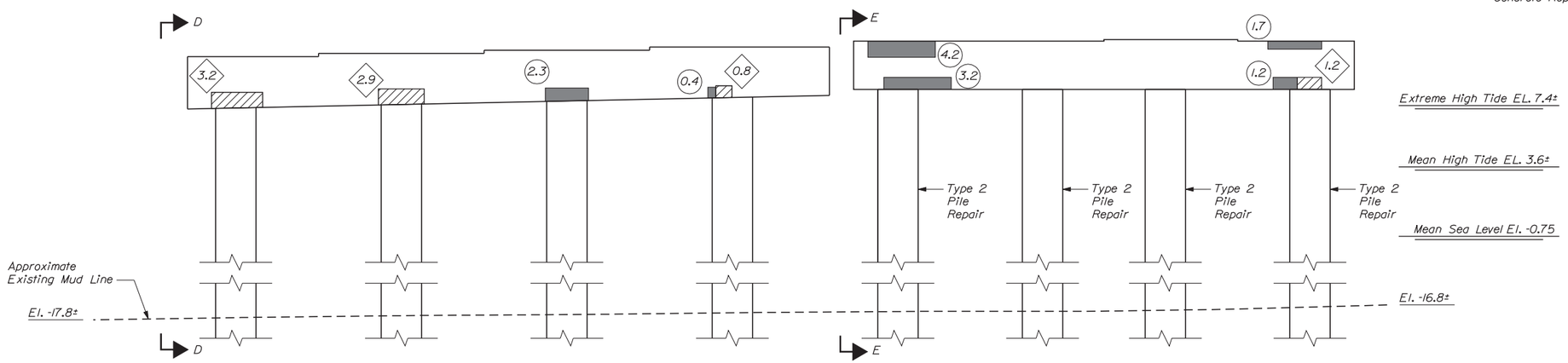

VIEW B-B

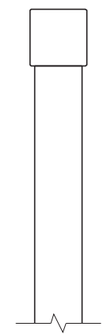

VIEW E-E

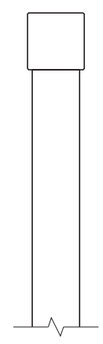

VIEW F-F

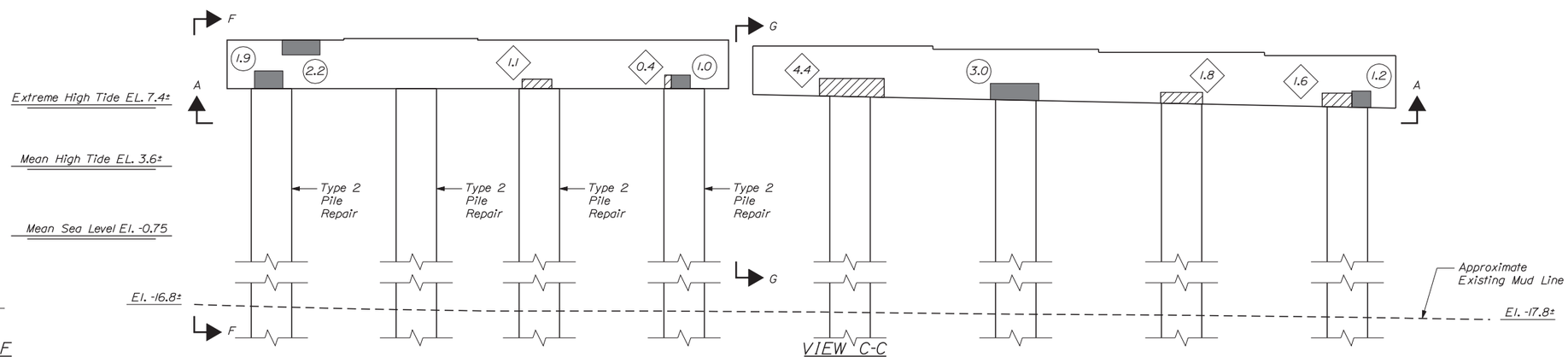

VIEW C-C

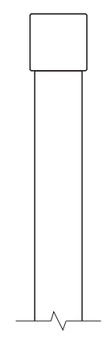

VIEW G-G

Scale: 1/4" = 1'-0"

No.	Revision	By	Date

Designed by:

Vanasse Hangen Brustlin, Inc.

CONSULTANT PROJECT MANAGER: T. BRYANT

	By	Date		By	Date
Designed	RSB	1/14	Checked	KJG	1/14
Drawn	MJB	1/14	In Charge of	TSB	1/14

VANASSE HANGEN BRUSTLIN, INC.
500 Southborough Dr.
Suite 105B
South Portland, ME 04106
TEL (207) 889-3150
FAX (207) 253-5596

MAINE TURNPIKE

THE GOLD STAR MEMORIAL HIGHWAY

MTA PROJECT MANAGER: Ralph C. Norwood IV, P.E.

BRIDGE REHABILITATION
YORK RIVER BRIDGES

SB BRIDGE PIER BENT 4
CONCRETE REPAIR AREAS

SHEET NUMBER:

CONTRACT: 2014.05

Filename: ...\st\planset\080_pier_SB_04.dgn

Date:1/23/2014

KEY:

- Approximate Limits of Delamination
- Approximate Limits of Spall
- # Square Foot Area of Delamination (<7.9" Deep unless otherwise noted)
- # Square Foot Area of Spall (<7.9" Deep unless otherwise noted)
- # Linear Foot of Crack

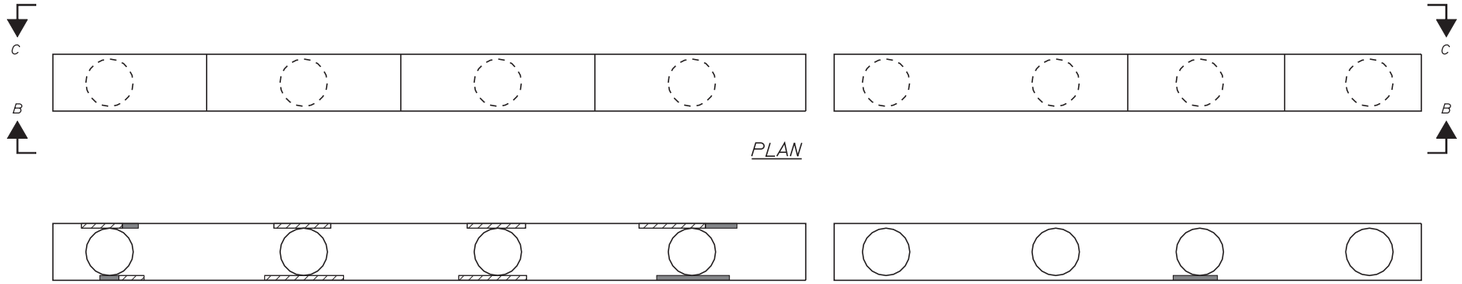

PLAN

VIEW A-A

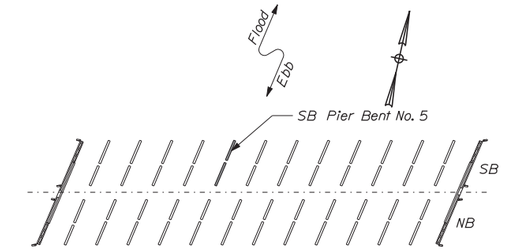

KEY PLAN

NOTE:

1. See Typical Concrete Repair Details Sheet for Concrete Repair Details.

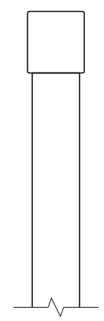

VIEW D-D

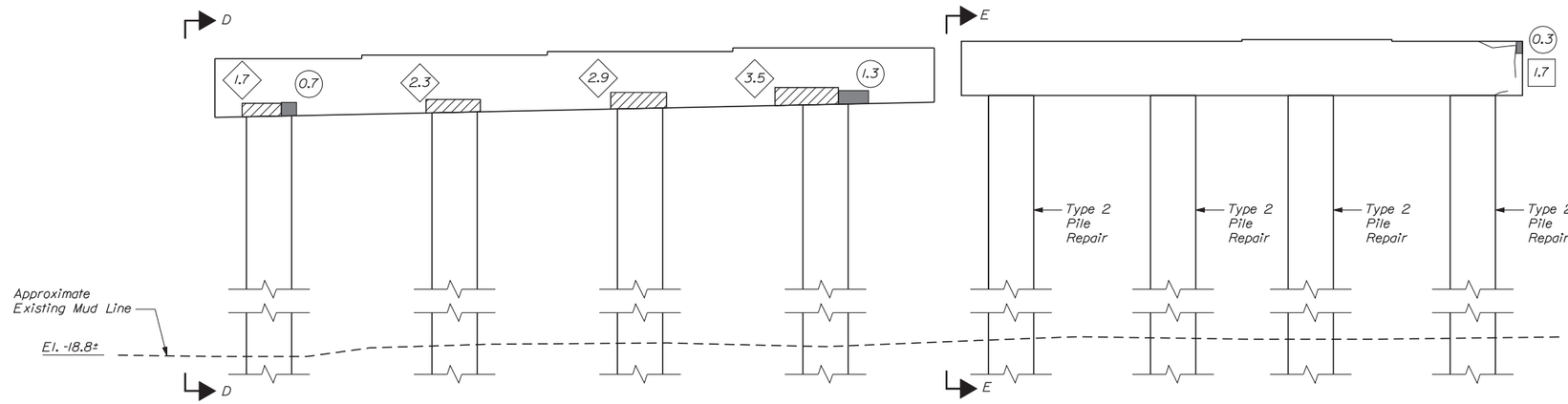

VIEW B-B

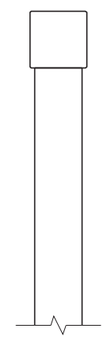

VIEW E-E

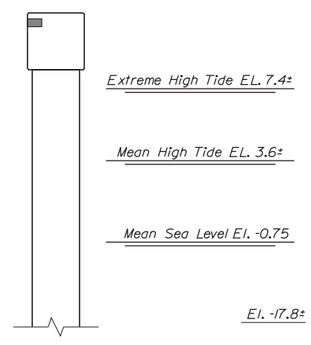

VIEW F-F

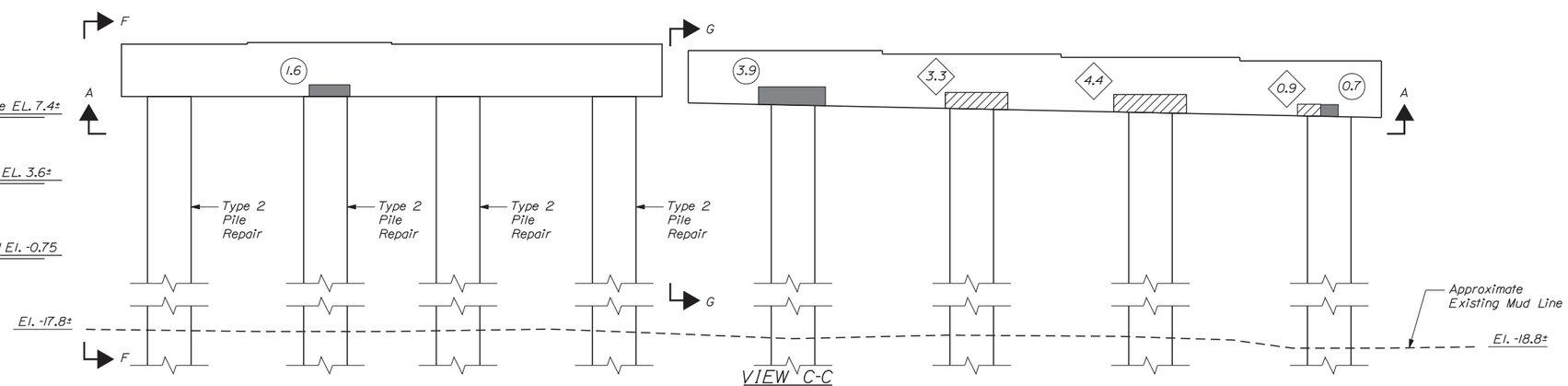

VIEW C-C

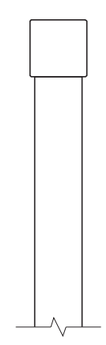

VIEW G-G

Filename: ...\st\planset\081_pier_SB_05.dgn

Scale: 1/4" = 1'-0"

No.	Revision	By	Date

Designed by:

VHB Vanasse Hangen Brustlin, Inc.

CONSULTANT PROJECT MANAGER: T. BRYANT

	By	Date		By	Date
Designed	RSB	1/14	Checked	KJG	1/14
Drawn	MJB	1/14	In Charge of	TSB	1/14

VANASSE HANGEN BRUSTLIN, INC.
500 Southborough Dr.
Suite 105B
South Portland, ME 04106
TEL (207) 889-3150
FAX (207) 253-5596

MAINE TURNPIKE

THE GOLD STAR MEMORIAL HIGHWAY

MTA PROJECT MANAGER: Ralph C. Norwood IV, P.E.

BRIDGE REHABILITATION
YORK RIVER BRIDGES

SB BRIDGE PIER BENT 5
CONCRETE REPAIR AREAS

SHEET NUMBER:

CONTRACT: 2014.05

Date:1/23/2014

KEY:

- Approximate Limits of Delamination
- Approximate Limits of Spall
- # Square Foot Area of Delamination (<7.9" Deep unless otherwise noted)
- # Square Foot Area of Spall (<7.9" Deep unless otherwise noted)
- # Linear Foot of Crack

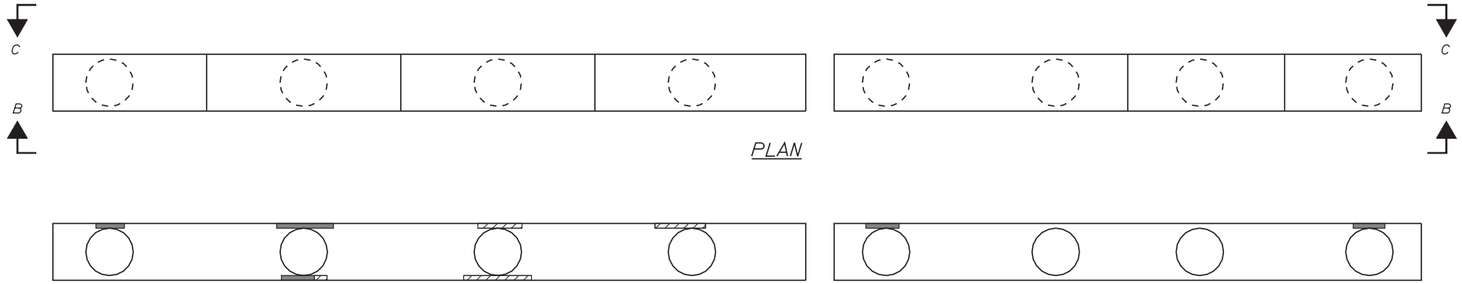

PLAN

VIEW A-A

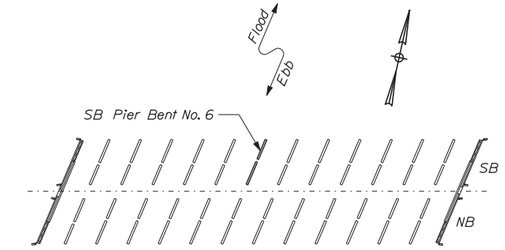

KEY PLAN

NOTE:

1. See Typical Concrete Repair Details Sheet for Concrete Repair Details.

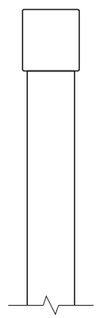

VIEW D-D

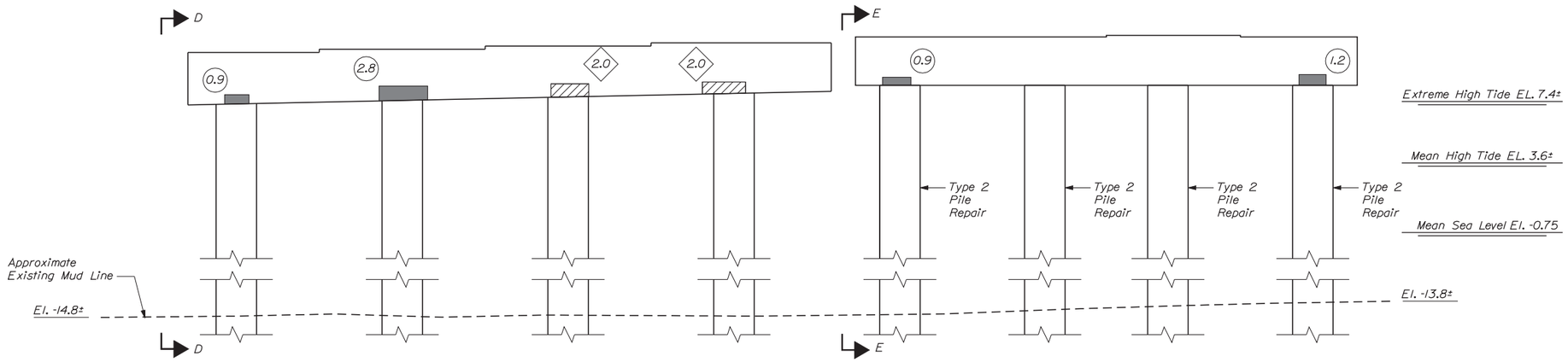

VIEW B-B

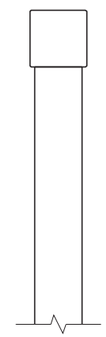

VIEW E-E

VIEW F-F

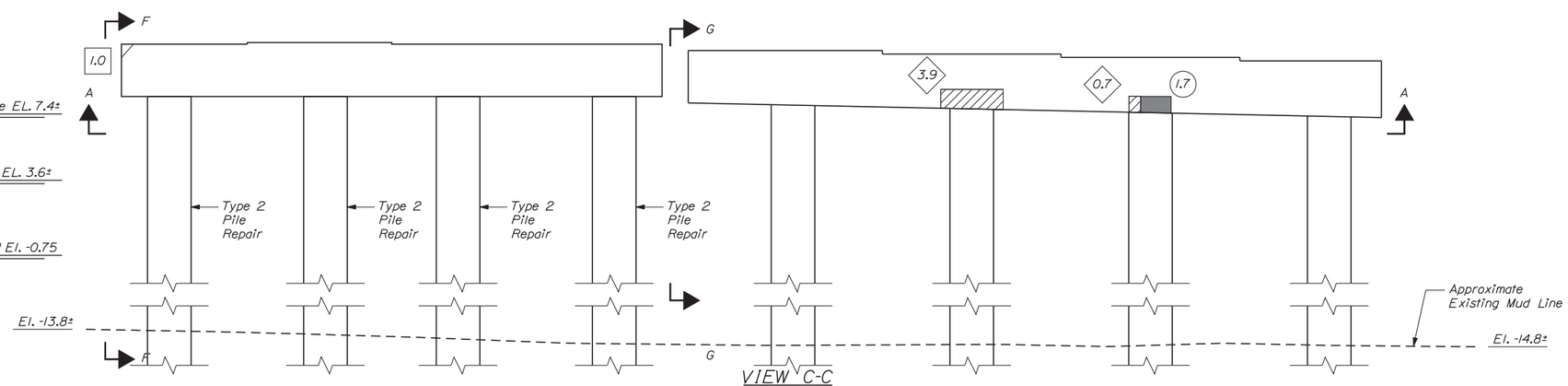

VIEW C-C

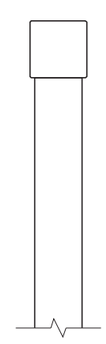

VIEW G-G

Scale: 1/4" = 1'-0"

No.	Revision	By	Date

Designed by:

Vanasse Hangen Brustlin, Inc.

CONSULTANT PROJECT MANAGER: T. BRYANT

	By	Date		By	Date
Designed	RSB	1/14	Checked	KJG	1/14
Drawn	MJB	1/14	In Charge of	TSB	1/14

VANASSE HANGEN BRUSTLIN, INC.
500 Southborough Dr.
Suite 105B
South Portland, ME 04106
TEL (207) 889-3150
FAX (207) 253-5596

MAINE TURNPIKE

THE GOLD STAR MEMORIAL HIGHWAY

MTA PROJECT MANAGER: Ralph C. Norwood IV, P.E.

BRIDGE REHABILITATION
YORK RIVER BRIDGES

SB BRIDGE PIER BENT 6
CONCRETE REPAIR AREAS

SHEET NUMBER:

CONTRACT: 2014.05

Filename: ...\st\planset\082_pier_SB_06.dgn

Date:1/23/2014

KEY:

- Approximate Limits of Delamination
- Approximate Limits of Spall
- # Square Foot Area of Delamination (<7.9" Deep unless otherwise noted)
- # Square Foot Area of Spall (<7.9" Deep unless otherwise noted)
- # Linear Foot of Crack

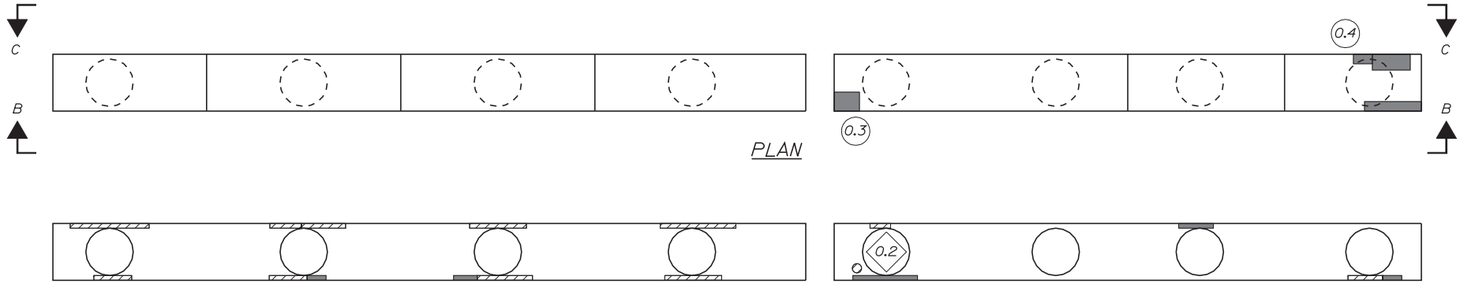

PLAN

VIEW A-A

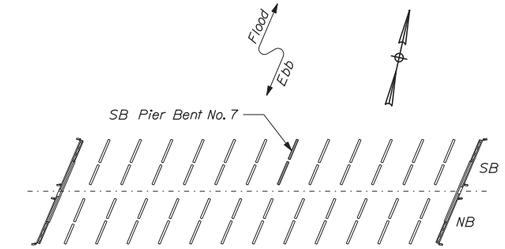

KEY PLAN

NOTE:

1. See Typical Concrete Repair Details Sheet for Concrete Repair Details.

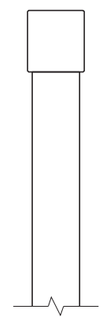

VIEW D-D

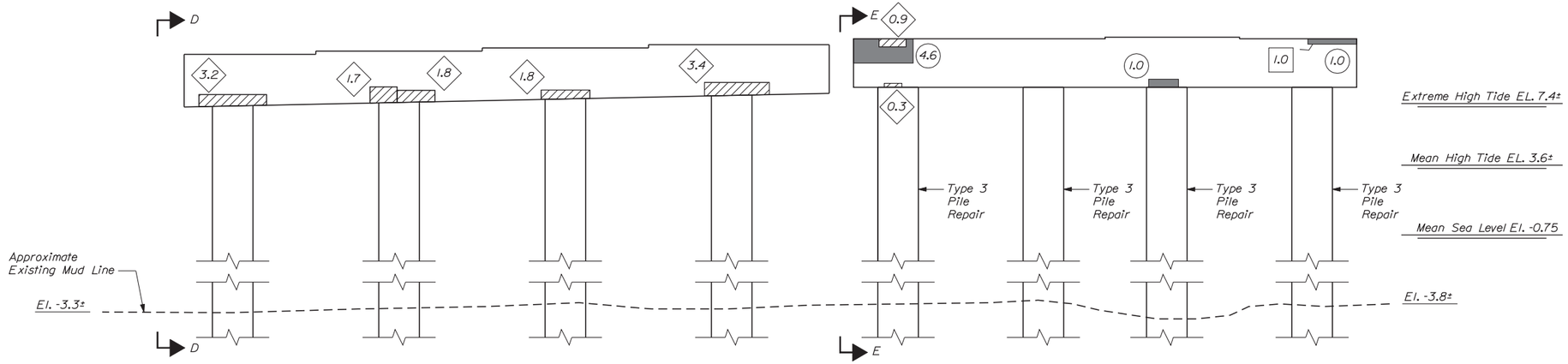

VIEW B-B

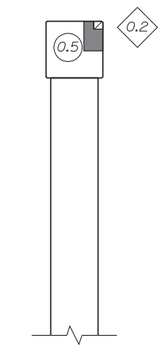

VIEW E-E

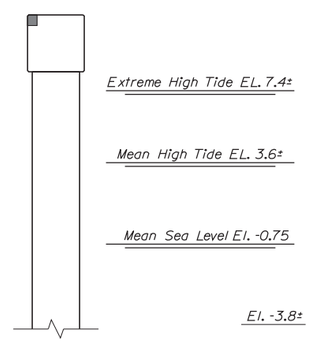

VIEW F-F

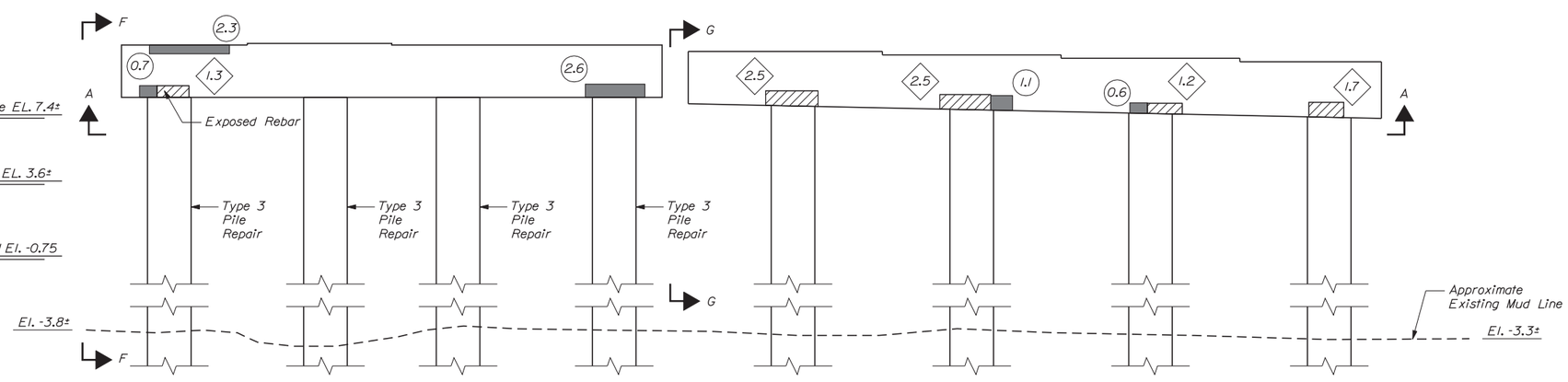

VIEW G-G

Filename: ...\st\planset\083_pier_SB_07.dgn

Scale: 1/4" = 1'-0"

No.	Revision	By	Date

Designed by:

Vanasse Hangen Brustlin, Inc.

CONSULTANT PROJECT MANAGER: T. BRYANT

	By	Date		By	Date
Designed	RSB	1/14	Checked	KJG	1/14
Drawn	MJB	1/14	In Charge of	TSB	1/14

VANASSE HANGEN BRUSTLIN, INC.
500 Southborough Dr.
Suite 105B
South Portland, ME 04106
TEL (207) 889-3150
FAX (207) 253-5596

MAINE TURNPIKE

THE GOLD STAR MEMORIAL HIGHWAY

MTA PROJECT MANAGER: Ralph C. Norwood IV, P.E.

BRIDGE REHABILITATION
YORK RIVER BRIDGES

SB BRIDGE PIER BENT 7
CONCRETE REPAIR AREAS

SHEET NUMBER:

CONTRACT: 2014.05

Date:1/23/2014

KEY:

- Approximate Limits of Delamination
- Approximate Limits of Spall
- # Square Foot Area of Delamination (<7.9" Deep unless otherwise noted)
- # Square Foot Area of Spall (<7.9" Deep unless otherwise noted)
- # Linear Foot of Crack

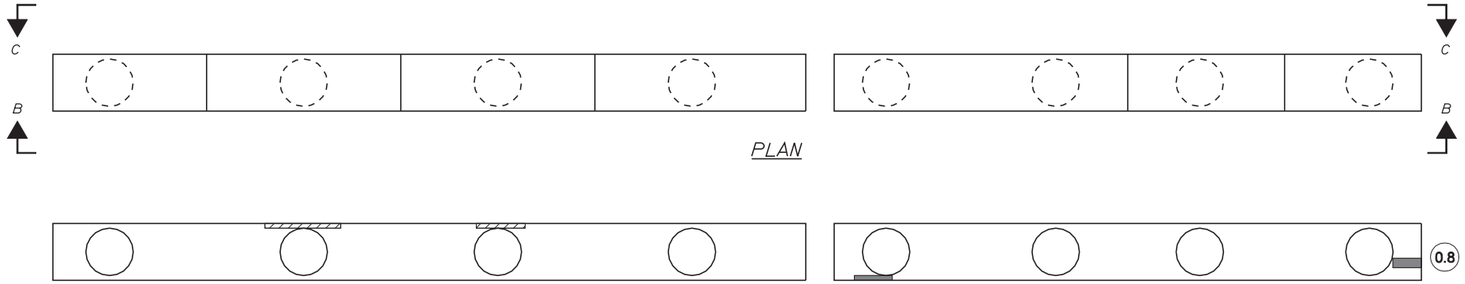

PLAN

VIEW A-A

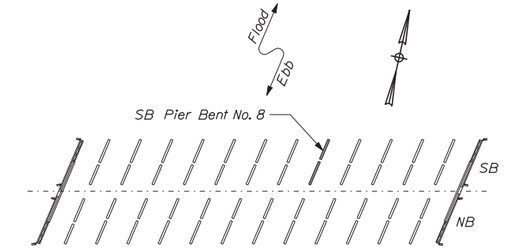

KEY PLAN

NOTE:

1. See Typical Concrete Repair Details Sheet for Concrete Repair Details.

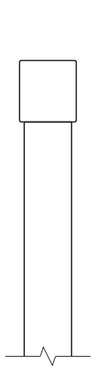

VIEW D-D

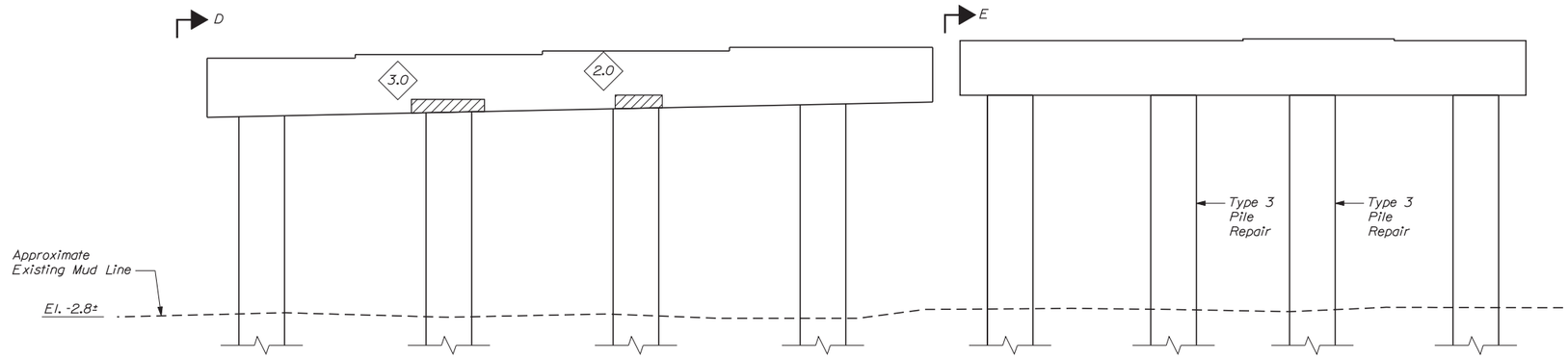

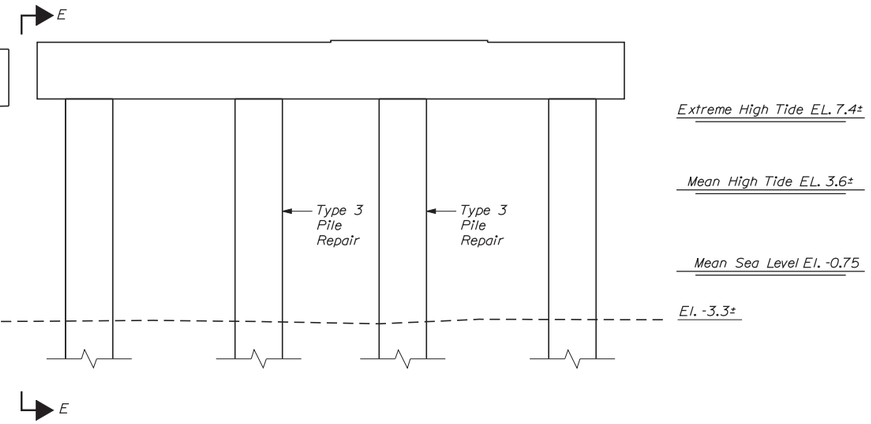

VIEW B-B

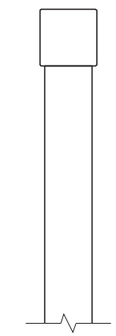

VIEW E-E

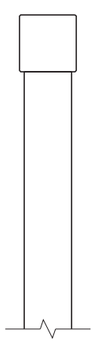

VIEW F-F

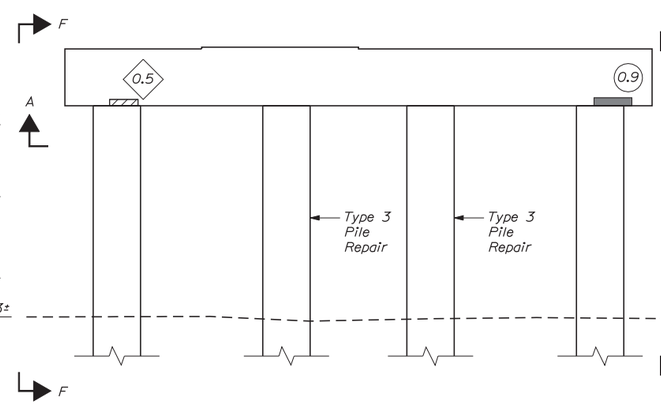

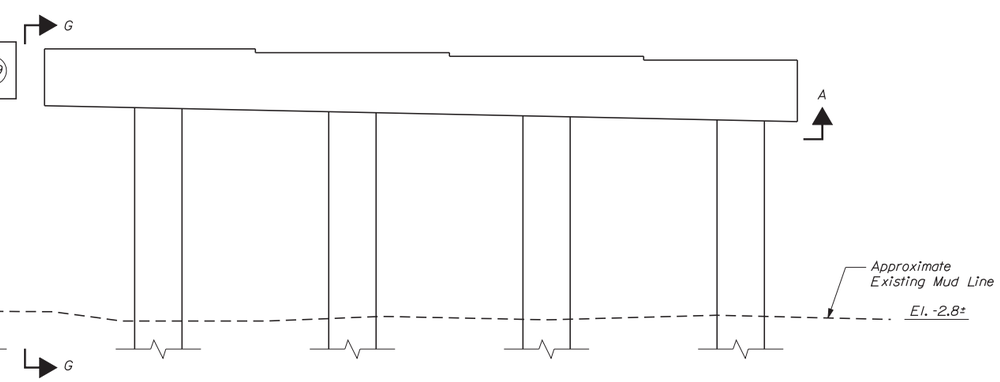

VIEW C-C

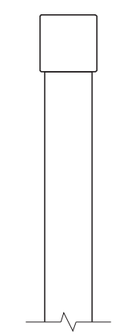

VIEW G-G

Scale: 1/4" = 1'-0"

No.	Revision	By	Date

Designed by:

Vanasse Hangen Brustlin, Inc.

CONSULTANT PROJECT MANAGER: T. BRYANT

	By	Date		By	Date
Designed	RSB	1/14	Checked	KJG	1/14
Drawn	MJB	1/14	In Charge of	TSB	1/14

VANASSE HANGEN BRUSTLIN, INC.
500 Southborough Dr.
Suite 105B
South Portland, ME 04106
TEL (207) 889-3150
FAX (207) 253-5596

MAINE TURNPIKE

THE GOLD STAR MEMORIAL HIGHWAY

MTA PROJECT MANAGER: Ralph C. Norwood IV, P.E.

BRIDGE REHABILITATION
YORK RIVER BRIDGES

SB BRIDGE PIER BENT 8
CONCRETE REPAIR AREAS

SHEET NUMBER:

CONTRACT: 2014.05

Filename: ...\st\planset\084_pier_SB_08.dgn

Date:1/23/2014

KEY:

- Approximate Limits of Delamination
- Approximate Limits of Spall
- # Square Foot Area of Delamination (<7.9" Deep unless otherwise noted)
- # Square Foot Area of Spall (<7.9" Deep unless otherwise noted)
- # Linear Foot of Crack

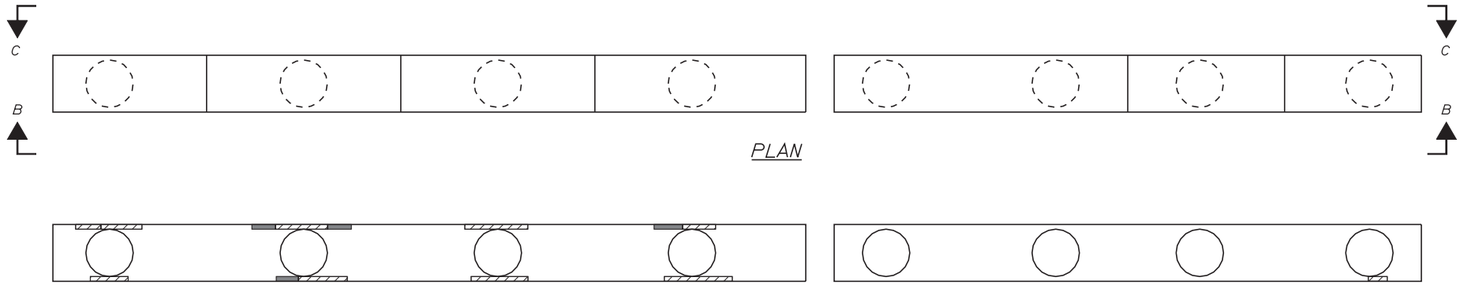

PLAN

VIEW A-A

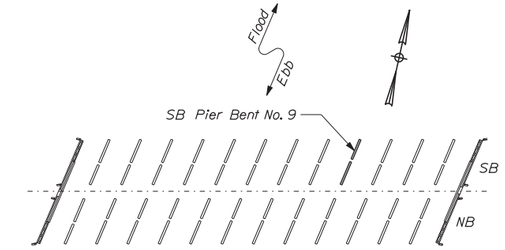

KEY PLAN

NOTE:

1. See Typical Concrete Repair Details Sheet for Concrete Repair Details.

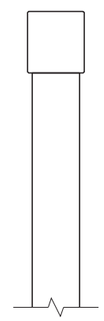

VIEW D-D

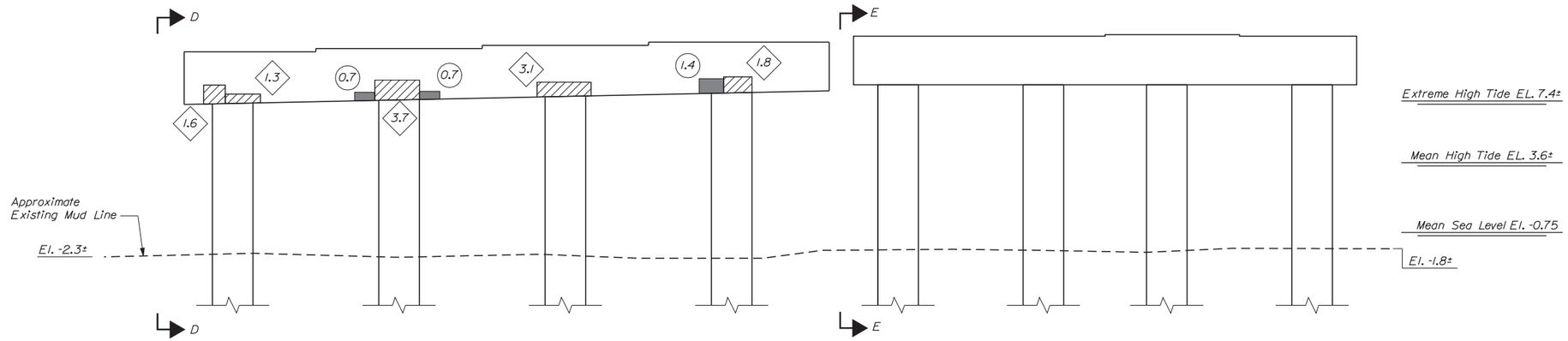

VIEW B-B

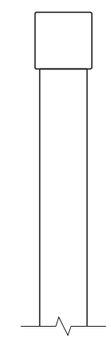

VIEW E-E

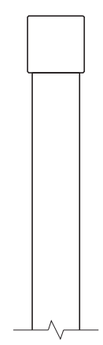

VIEW F-F

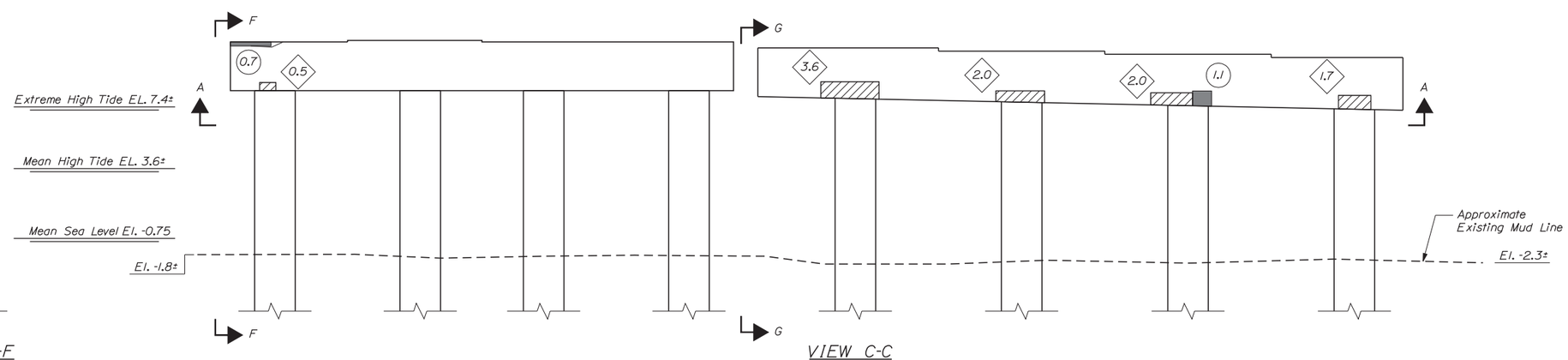

VIEW C-C

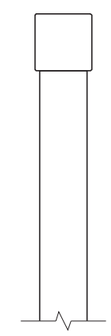

VIEW G-G

Filename: ...\st\planset\085_pier_SB_09.dgn

Scale: 1/4" = 1'-0"

No.	Revision	By	Date

Designed by:

VHB Vanasse Hangen Brustlin, Inc.

CONSULTANT PROJECT MANAGER: T. BRYANT

	By	Date		By	Date
Designed	RSB	1/14	Checked	KJG	1/14
Drawn	MJB	1/14	In Charge of	TSB	1/14

VANASSE HANGEN BRUSTLIN, INC.
500 Southborough Dr.
Suite 105B
South Portland, ME 04106
TEL (207) 889-3150
FAX (207) 253-5596

MAINE TURNPIKE

THE GOLD STAR MEMORIAL HIGHWAY

MTA PROJECT MANAGER: Ralph C. Norwood IV, P.E.

BRIDGE REHABILITATION
YORK RIVER BRIDGES

SB BRIDGE PIER BENT 9
CONCRETE REPAIR AREAS

SHEET NUMBER:

CONTRACT: 2014.05

Date:1/23/2014

KEY:

- Approximate Limits of Delamination
- Approximate Limits of Spall
- # Square Foot Area of Delamination (<7.9" Deep unless otherwise noted)
- # Square Foot Area of Spall (<7.9" Deep unless otherwise noted)
- # Linear Foot of Crack

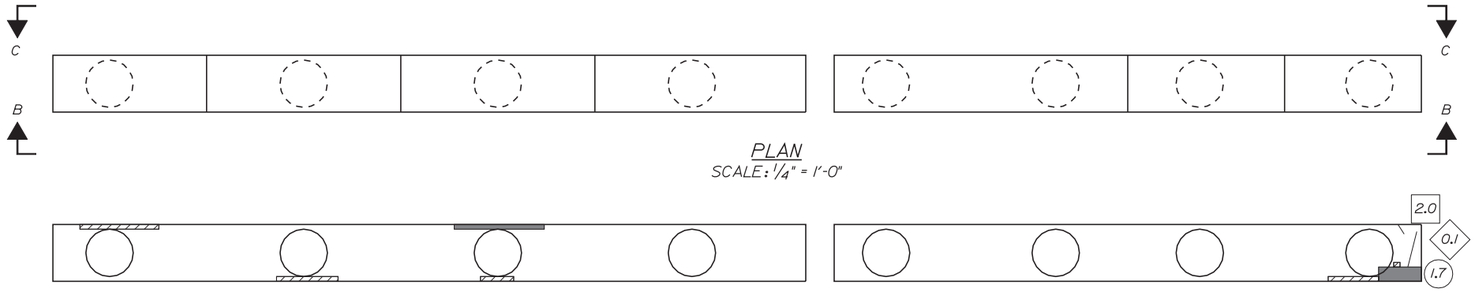

PLAN
SCALE: 1/4" = 1'-0"

VIEW A-A

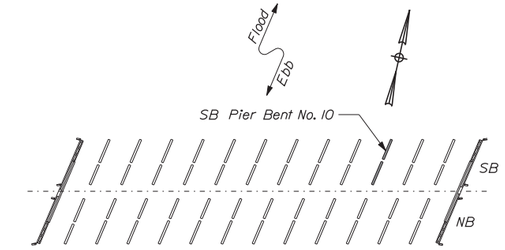

KEY PLAN

NOTE:

1. See Typical Concrete Repair Details Sheet for Concrete Repair Details.

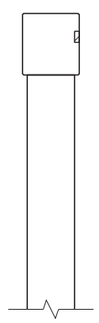

VIEW D-D

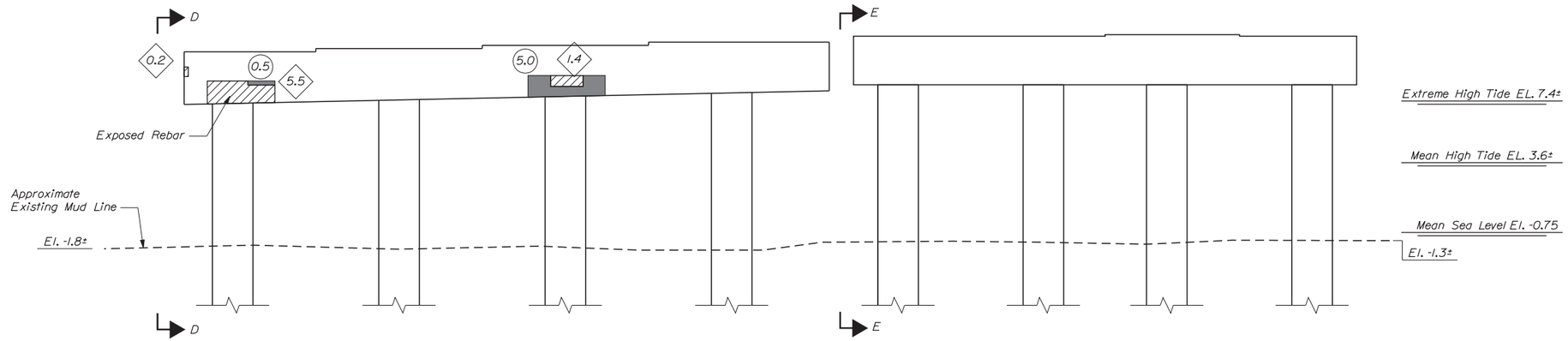

VIEW B-B

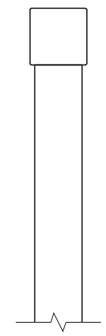

VIEW E-E

VIEW F-F

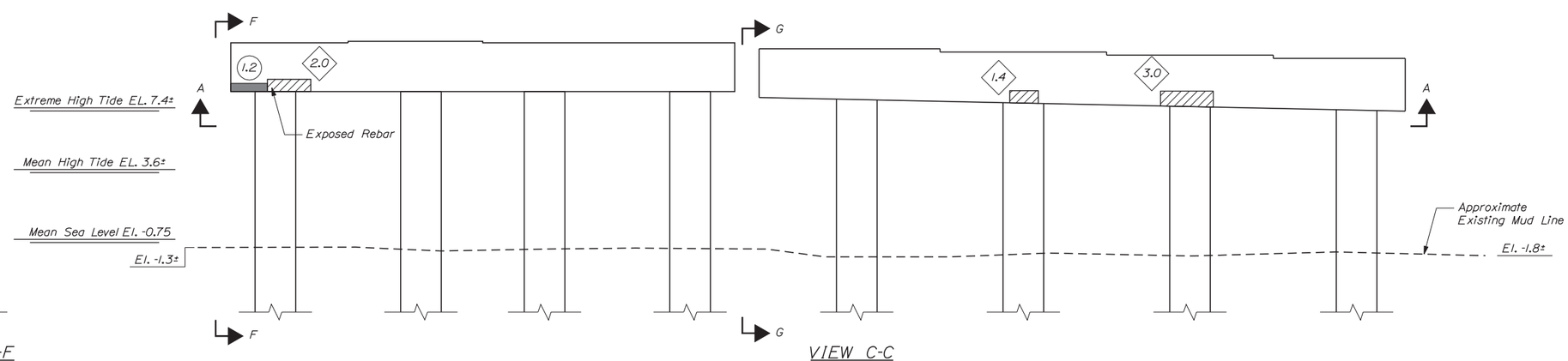

VIEW C-C

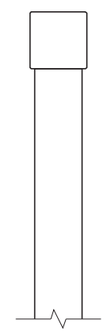

VIEW G-G

Scale: 1/4" = 1'-0"

No.	Revision	By	Date

Designed by:

VHB Vanasse Hangen Brustlin, Inc.

CONSULTANT PROJECT MANAGER: T. BRYANT

	By	Date		By	Date
Designed	RSB	1/14	Checked	KJG	1/14
Drawn	MJB	1/14	In Charge of	TSB	1/14

VANASSE HANGEN BRUSTLIN, INC.
500 Southborough Dr.
Suite 105B
South Portland, ME 04106
TEL (207) 889-3150
FAX (207) 253-5596

MAINE TURNPIKE

THE GOLD STAR MEMORIAL HIGHWAY

MTA PROJECT MANAGER: Ralph C. Norwood IV, P.E.

BRIDGE REHABILITATION
YORK RIVER BRIDGES

SB BRIDGE PIER BENT 10
CONCRETE REPAIR AREAS

SHEET NUMBER:

CONTRACT: 2014.05

Filename: ...\st\planset\086_pier_SB_10.dgn

Date:1/23/2014

KEY:

- Approximate Limits of Delamination
- Approximate Limits of Spall
- # Square Foot Area of Delamination (<7.9" Deep unless otherwise noted)
- # Square Foot Area of Spall (<7.9" Deep unless otherwise noted)
- # Linear Foot of Crack

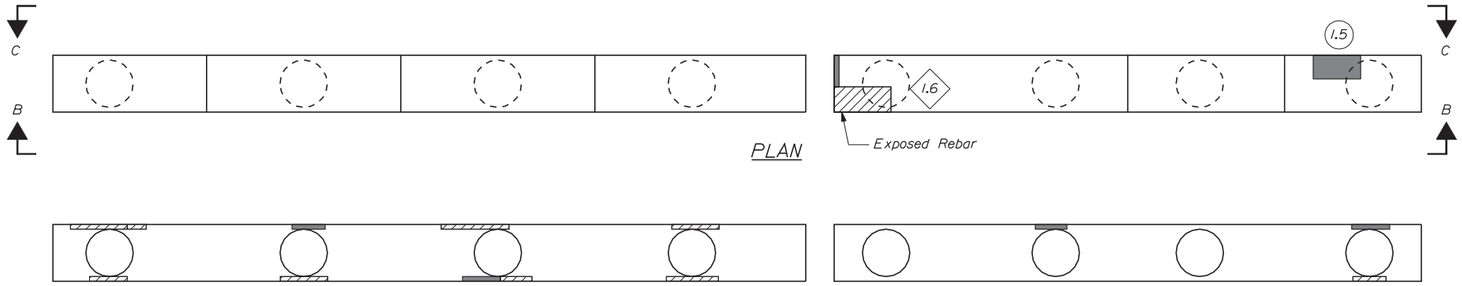

PLAN

VIEW A-A

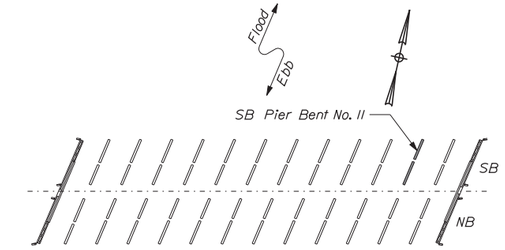

KEY PLAN

NOTE:

1. See Typical Concrete Repair Details Sheet for Concrete Repair Details.

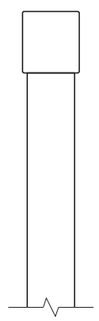

VIEW D-D

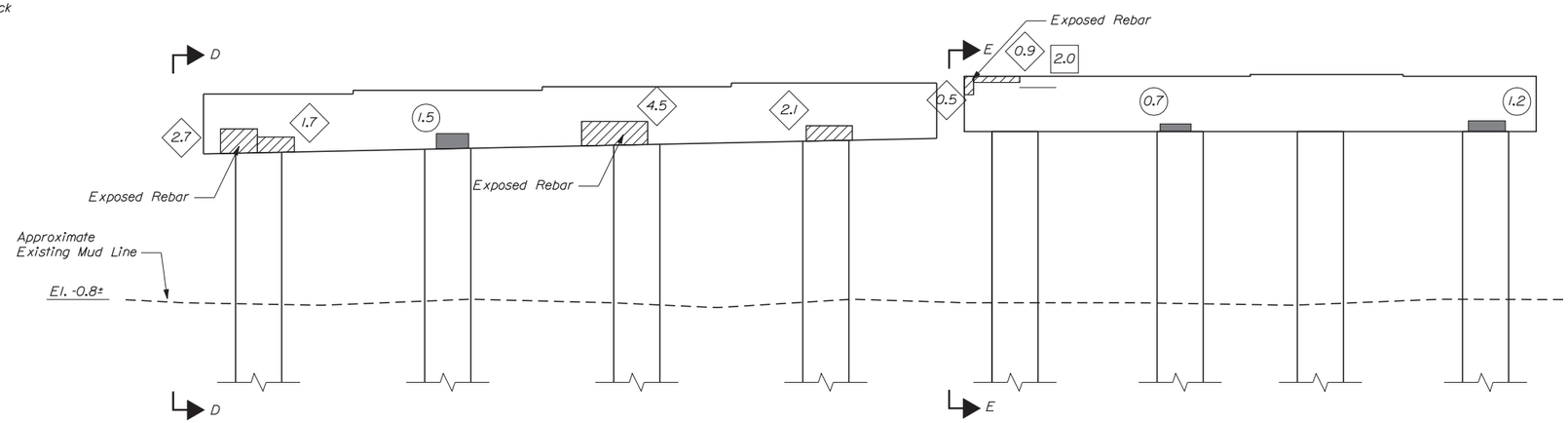

VIEW B-B

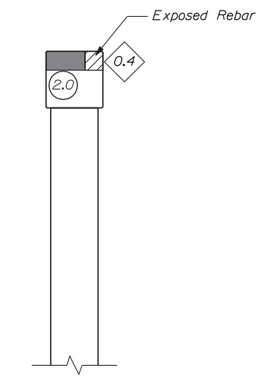

VIEW E-E

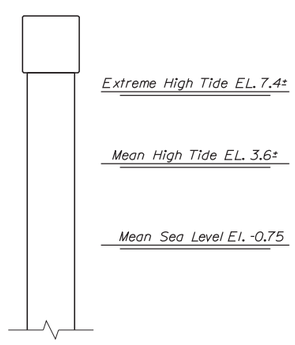

VIEW F-F

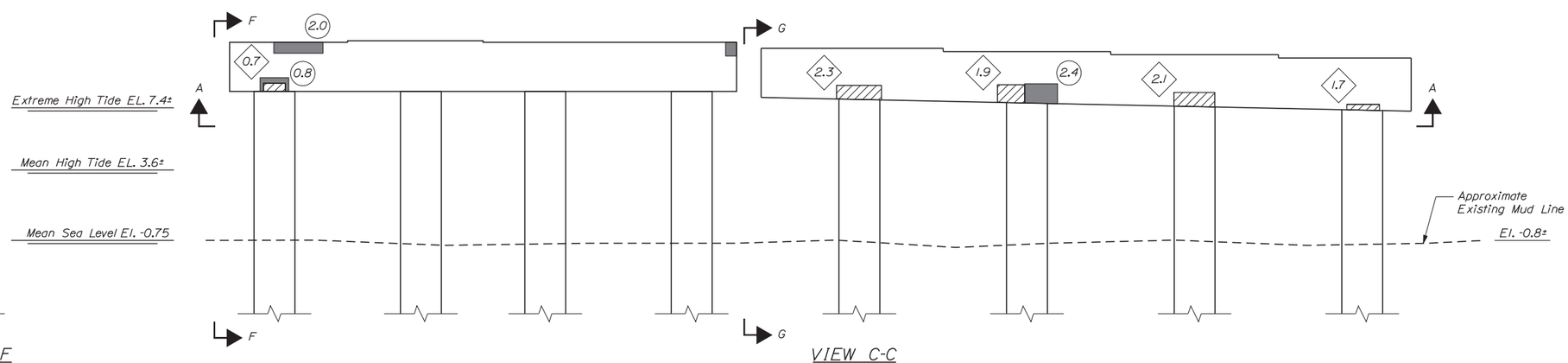

VIEW C-C

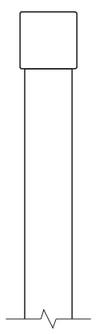

VIEW G-G

Scale: 1/4" = 1'-0"

No.	Revision	By	Date

Designed by:

VHB Vanasse Hangen Brustlin, Inc.

CONSULTANT PROJECT MANAGER: T. BRYANT

	By	Date		By	Date
Designed	RSB	1/14	Checked	KJG	1/14
Drawn	MJB	1/14	In Charge of	TSB	1/14

VANASSE HANGEN BRUSTLIN, INC.
500 Southborough Dr.
Suite 105B
South Portland, ME 04106
TEL (207) 889-3150
FAX (207) 253-5596

MAINE TURNPIKE

THE GOLD STAR MEMORIAL HIGHWAY

MTA PROJECT MANAGER: Ralph C. Norwood IV, P.E.

BRIDGE REHABILITATION
YORK RIVER BRIDGES

SB BRIDGE PIER BENT 11
CONCRETE REPAIR AREAS

SHEET NUMBER:

CONTRACT: 2014.05

Filename: ...\st\planset\087_pier_SB_11.dgn

Date:1/23/2014

KEY:

- Approximate Limits of Delamination
- Approximate Limits of Spall
- # Square Foot Area of Delamination (<7.9" Deep unless otherwise noted)
- # Square Foot Area of Spall (<7.9" Deep unless otherwise noted)
- # Linear Foot of Crack

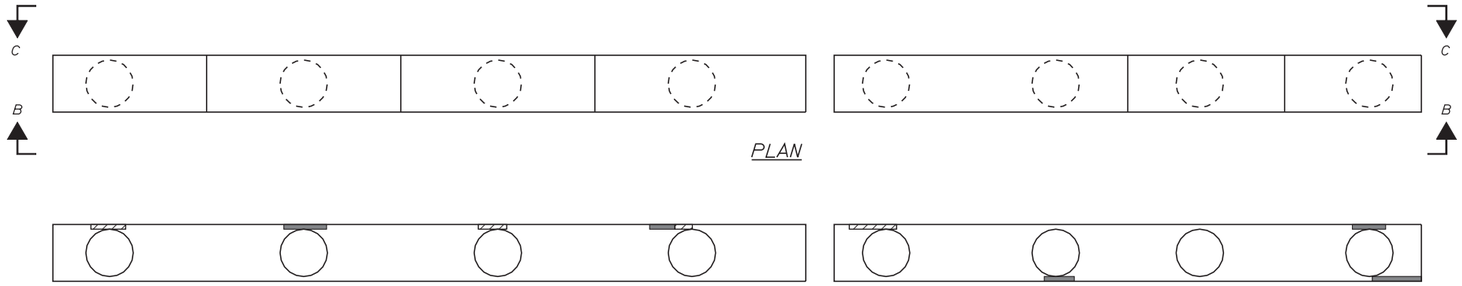

PLAN

VIEW A-A

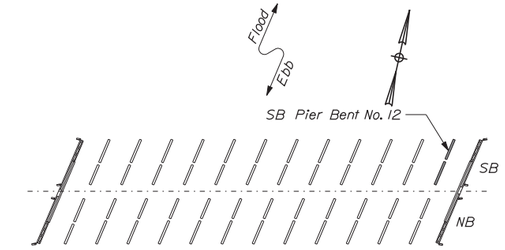

KEY PLAN

NOTE:

1. See Typical Concrete Repair Details Sheet for Concrete Repair Details.

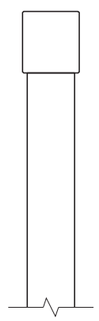

VIEW D-D

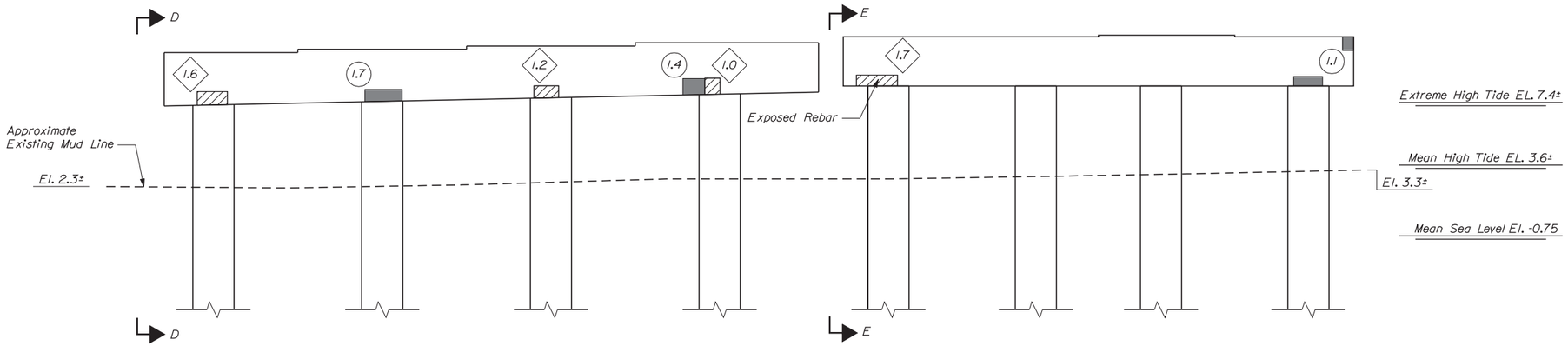

VIEW B-B

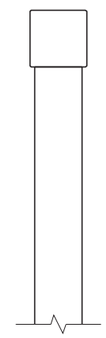

VIEW E-E

VIEW F-F

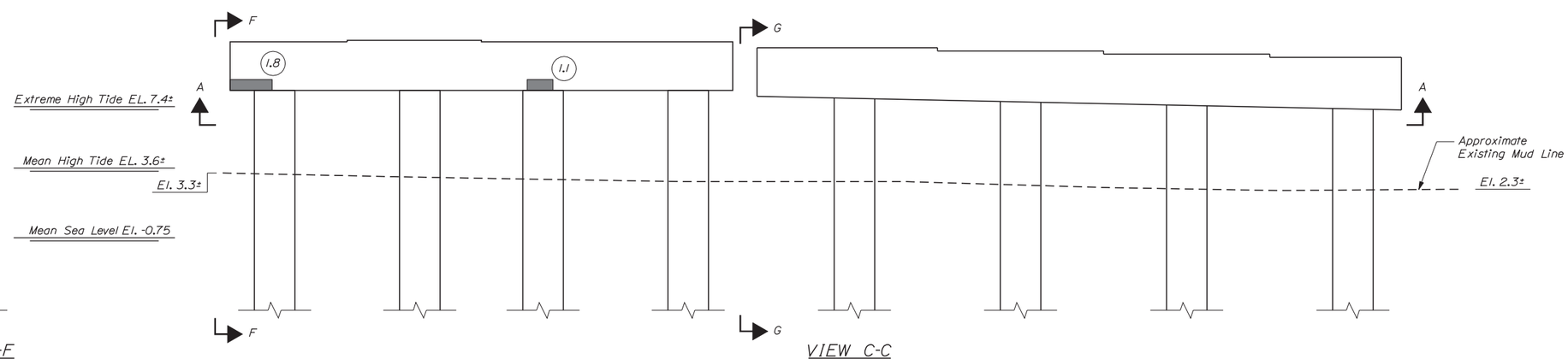

VIEW C-C

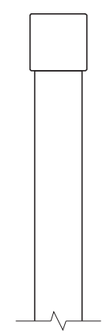

VIEW G-G

Filename: ...\st\planset\088_pier_SB_12.dgn

Scale: 1/4" = 1'-0"

No.	Revision	By	Date

Designed by:

VHB Vanasse Hangen Brustlin, Inc.

CONSULTANT PROJECT MANAGER: T. BRYANT

	By	Date		By	Date
Designed	RSB	1/14	Checked	KJG	1/14
Drawn	MJB	1/14	In Charge of	TSB	1/14

VANASSE HANGEN BRUSTLIN, INC.
500 Southborough Dr.
Suite 105B
South Portland, ME 04106
TEL (207) 889-3150
FAX (207) 253-5596

MAINE TURNPIKE

THE GOLD STAR MEMORIAL HIGHWAY

MTA PROJECT MANAGER: Ralph C. Norwood IV, P.E.

BRIDGE REHABILITATION
YORK RIVER BRIDGES

SB BRIDGE PIER BENT 12
CONCRETE REPAIR AREAS

SHEET NUMBER:

CONTRACT: 2014.05

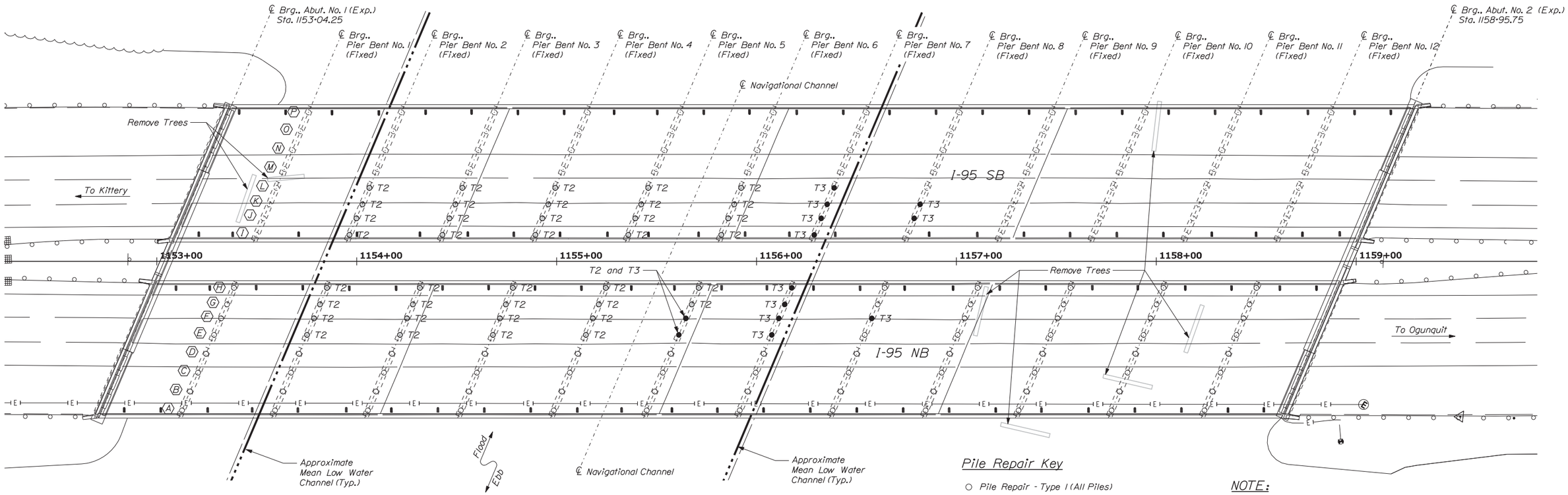

PILE LAYOUT PLAN

Pile Repair Key

- ○ Pile Repair - Type 1 (All Piles)
- ◍ T2 = Pile Repair - Type 2
- ● T3 = Pile Repair - Type 3

NOTE:

1. Band dimensions in table refer to vertical height of deterioration.

PILE CONDITION TABLE

Pier Bent	Pile Location	Description
2	E	24" Band. 4" to 6" Deep
2	F	24" Band. Concrete Deteriorated up to 8" Deep
2	G	21" Band. Concrete Deteriorated up to 5" Deep
2	H	18" Band. Deteriorated up to 5" Deep. H-Pile Exposed 8" Height. FL = 0.50"
2	I	18" Band. Deteriorated 2" Deep
2	J	20" Band. Deteriorated 2" Deep
2	K L	16" Band. Deteriorated 2" Deep
3	E F	14" to 18" Bands. Concrete Deteriorated 3" Deep
3	G H	14" to 18" Bands. Concrete Deteriorated 1" Deep
3	I J	14" Band Steel Jacket Corroded
3	K	14" Band Steel Jacket Corroded. 2" x 6" Pocket. 2" Deep
3	L	14" Band Steel Jacket Corroded. 10" x 7" Pocket. 4" Deep
4	E F G H	14" Band. Concrete Deteriorated 1" Deep
4	I J L	12" to 24" Band. Concrete Deteriorated 2" Deep Maximum
4	K	12" to 24" Band. Concrete Deteriorated 2" Deep Maximum. Hole Above Band. 18" Long. 12" High. 12" Deep with H-Pile Exposed

PILE CONDITION TABLE

Pier Bent	Pile Location	Description
5	E	20" Band. Concrete Deteriorated 2" Deep
5	F	20" Band. Concrete Deteriorated 2" to 5" Deep
5	G	19" Band. Concrete Deteriorated 3" Deep
5	H	14" to 28" Band. Concrete Deteriorated 2" to 5" Deep
5	I L	24" to 28" Band. Concrete Deteriorated 2" to 3"
5	J K	24" to 28" Band. Concrete Deteriorated 3" to 4"
6	E	20" Band. H-Pile exposed. FL=0.50". Sediment erosion at base of Pile. Bottom Steel Jacket is 12" to 18" from Mudline.
6	F	26" Band. H-Pile exposed. FL=0.50". Sediment erosion at base of Pile. Bottom Steel Jacket is 12" to 18" from Mudline.
6	G	20" Band. H-Pile exposed. FL=0.44"
6	H	22" Band. Concrete Deteriorated 3" to 6" Deep
6	I	22" Band. Concrete Deteriorated 2" to 3" Deep
6	J K	20" Band. Concrete Deteriorated 2" Deepded
6	L	1 SF Hole in Steel. Concrete Deteriorated 3" Deep. Second Hole in Steel 1 SF. 16" Band Steel Jacket Corroded

PILE CONDITION TABLE

Pier Bent	Pile Location	Description
7	E	Sediment Erosion at Base of Pile. Bottom of Steel Jacket is 27" from Mudline. H-Pile in Good condition. 12" Band concrete deteriorated ½" to 2" Deep.
7	F	Sediment Erosion at Base of Pile. Bottom of Steel Jacket is 28" from Mudline. H-Pile in Good condition. 12" Band concrete deteriorated ½" to 2" Deep.
7	G	Sediment Erosion at Base of Pile. Bottom of Steel Jacket is 22" from Mudline. H-Pile in Good condition. 12" Band concrete deteriorated ½" to 2" Deep.
7	H	Sediment Erosion at Base of Pile. Bottom of Steel Jacket is 21" from Mudline. H-Pile in Good condition. 12" Band concrete deteriorated ½" to 2" Deep.
7	I	Sediment Erosion at Base of Pile. Bottom of Steel Jacket is 14" from Mudline. FL = 0.625"
7	J	Sediment Erosion at Base of Pile. Bottom of Steel Jacket is 26" from Mudline. FL = 0.625"
7	K	Sediment Erosion at Base of Pile. Bottom of Steel Jacket is 24" from Mudline. Two Pockets of Deteriorated Concrete 4" Tall. 12" Wide. 6" Deep. FL = 0.60"
7	L	Sediment Erosion at Base of Pile. Bottom of Steel Jacket is 28" from Mudline. FL = 0.44"
8	F	8" Wide Pocket. 2" Deep
8	J	3" Band. 7" Deep. ½ Circumference
8	K	4" Band. 7" Deep. ½ Circumference

Scale: 1" = 25'-0"

25 0 25 50

Scale of Feet

No.	Revision	By	Date

Designed by:

VHB Vanasse Hangen Brustlin, Inc.

CONSULTANT PROJECT MANAGER: T. BRYANT

	By	Date		By	Date
Designed	RSB	1/14	Checked	KJG	1/14
Drawn	BJM	1/14	In Charge of	TSB	1/14

VANASSE HANGEN BRUSTLIN, INC.
500 Southborough Dr.
Suite 105B
South Portland, ME 04106
TEL (207) 889-3150
FAX (207) 253-5596

MAINE TURNPIKE

THE GOLD STAR MEMORIAL HIGHWAY

MTA PROJECT MANAGER: Ralph C. Norwood IV, P.E.

BRIDGE REHABILITATION
YORK RIVER BRIDGES

PILE REPAIRS LOCATION PLAN

SHEET NUMBER:

CONTRACT: 2014.05

Date: 1/23/2014

Filename: ...\st\planset\089_Pile Loc_01.dgn

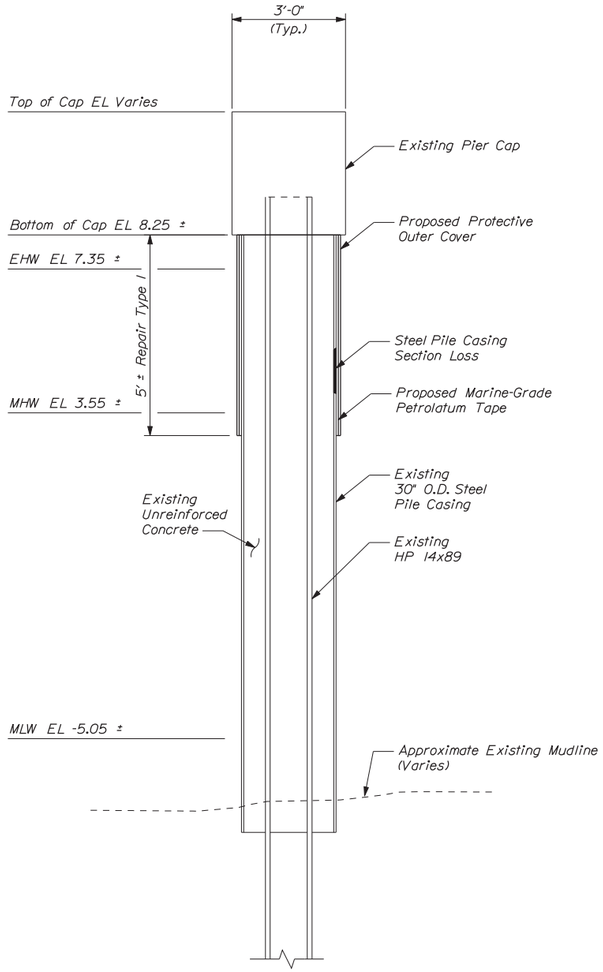

TYPICAL (TYPE I) PILE REPAIRS SECTION A-A
(All Piles)

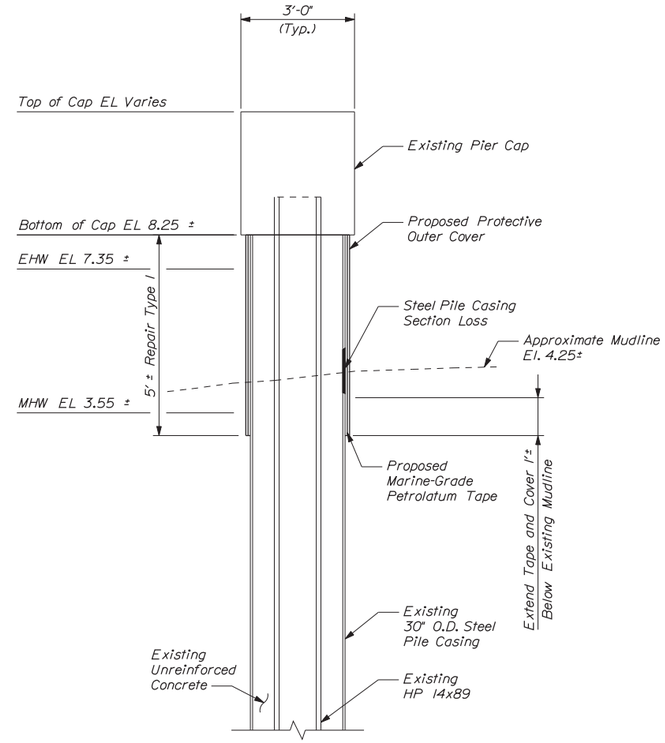

TYPICAL (TYPE IA) PILE REPAIRS SECTION A-A
(Northbound Pier 12, Piles A-D)

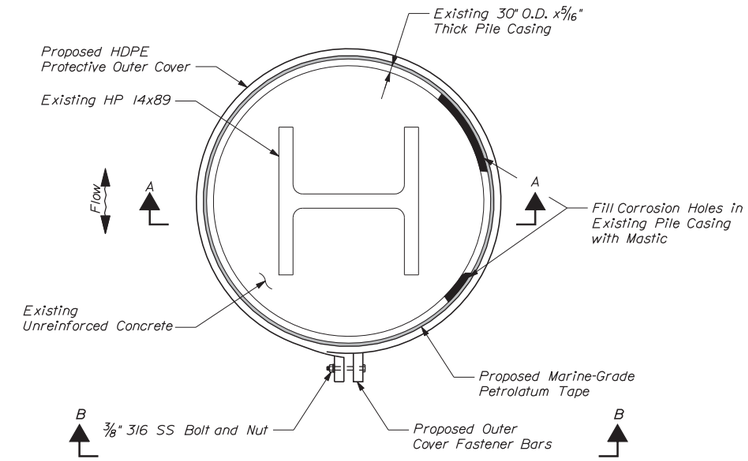

TYPICAL TYPE I PILE REPAIR SECTION

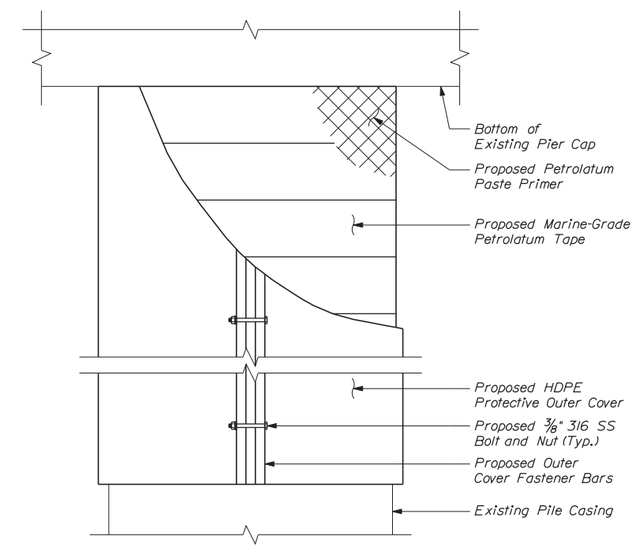

ELEVATION VIEW B-B

TYPE I PILE REPAIR NOTES:

1. Set up staging and shielding around pile repair area to provide access for cleaning, inspection and repair.

2. Pressure wash and mechanically clean repair area, including any area that will be encapsulated with the marine-grade tape and protective cover. All marine life, rust and deleterious material shall be removed.

3. Prior to the start of pile repair, the Resident and the Contractor shall inspect the pile and determine the repair limits.

4. Install the tape and protective cover flush with the bottom of the pier cap and extend it at least 5'-0"

5. The marine-grade tape and protective cover shall extend 1'-0" below mudline at NB bridge Pier 12, Piles A-D, or to the agreed upon repair limits.

Date:1/23/2014

Filename: ...\planset\090_pile repair_01.dgn

Scale: As Noted

No.	Revision	By	Date

Designed by:

VHB Vanasse Hangen Brustlin, Inc.

CONSULTANT PROJECT MANAGER: T. BRYANT

	By	Date		By	Date
Designed	RSB	1/14	Checked	KJG	1/14
Drawn	BJM	1/14	In Charge of	TSB	1/14

VANASSE HANGEN BRUSTLIN, INC.
500 Southborough Dr.
Suite 105B
South Portland, ME 04106
TEL (207) 889-3150
FAX (207) 253-5596

MAINE TURNPIKE

THE GOLD STAR MEMORIAL HIGHWAY

MTA PROJECT MANAGER: Ralph C. Norwood IV, P.E.

BRIDGE REHABILITATION
YORK RIVER BRIDGES

TYPE 1 PILE REPAIR DETAILS

SHEET NUMBER:

CONTRACT: 2014.05

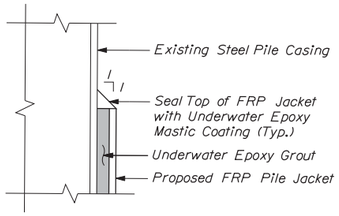

DETAIL A

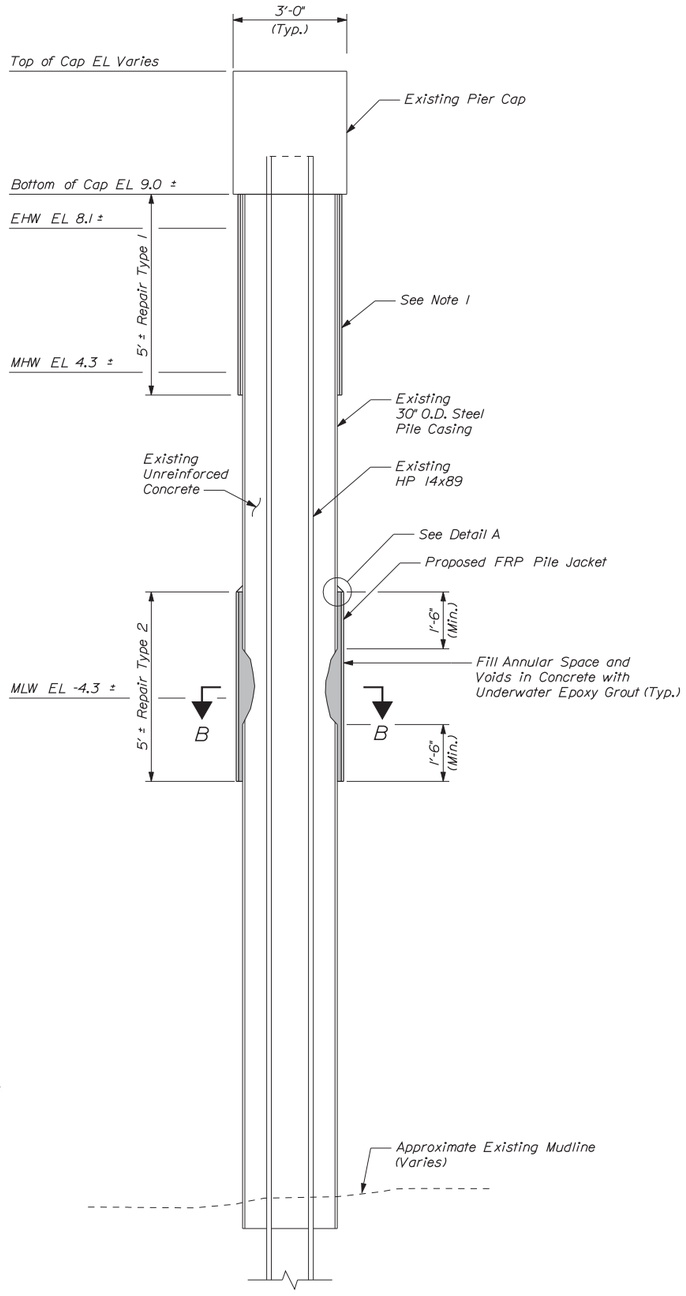

TYPICAL (TYPE 1 & 2) PILE REPAIR SECTION A-A

(NB & SB Piers 2, 3, 4, 5 & 6, Piles E-L)

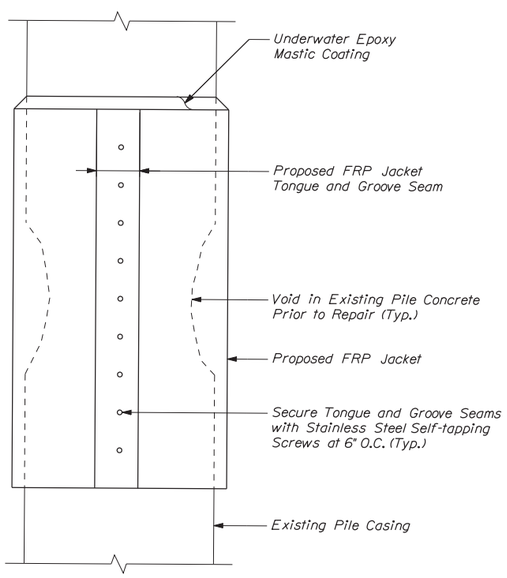

ELEVATION VIEW C-C

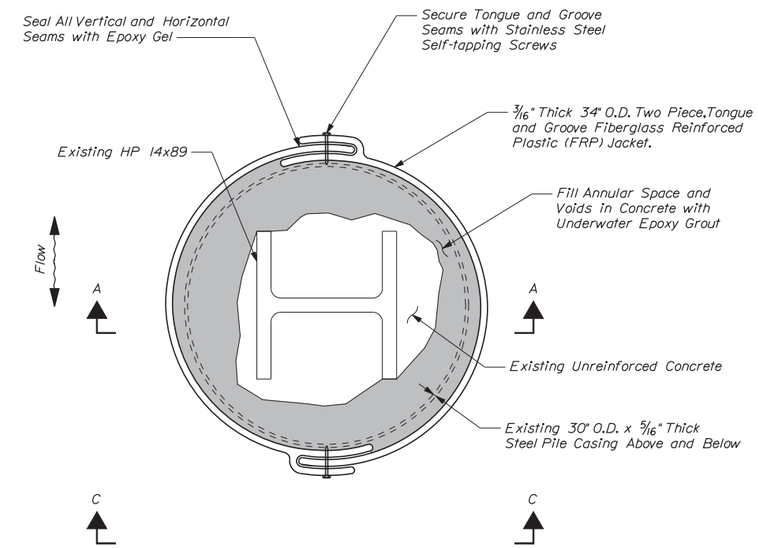

TYPICAL TYPE 2 PILE REPAIR SECTION B-B

TYPE 2 PILE REPAIR NOTES:

1. Set up staging and shielding around pile repair area to provide access for cleaning, inspection and repair.

2. Pressure wash and mechanically clean repair area, including any area that will be encapsulated with the pile jacket. All marine life, rust and deleterious material shall be removed.

3. Prior to the start of pile repair, the Resident and the Contractor shall inspect the pile and determine the repair limits.

4. Install two piece, tongue and groove fiberglass reinforced plastic (FRP) jacket, ensuring that it extends at least 1'-6" above and below the top and bottom of the deteriorated section.

5. Apply epoxy gel to all seams and secure using stainless steel self-tapping screws.

6. Install bottom seal of jacket using closed foam, oakum or expanding resin or other appropriate material.

7. Use approved method to fill jacket with underwater epoxy grout.

8. See Pile Repairs Location Plan Sheet for locations and sizes of Type 2 pile repairs.

Date:1/23/2014

Filename: ...\planset\091_pile repair_02.dgn

Scale: As Noted

No.	Revision	By	Date

Designed by:

VHB Vanasse Hangen Brustlin, Inc.

CONSULTANT PROJECT MANAGER: T. BRYANT

	By	Date		By	Date
Designed	RSB	1/14	Checked	KJG	1/14
Drawn	BJM	1/14	In Charge of	TSB	1/14

VANASSE HANGEN BRUSTLIN, INC.
500 Southborough Dr.
Suite 105B
South Portland, ME 04106
TEL (207) 889-3150
FAX (207) 253-5596

MAINE TURNPIKE

THE GOLD STAR MEMORIAL HIGHWAY

MTA PROJECT MANAGER: Ralph C. Norwood IV, P.E.

BRIDGE REHABILITATION
YORK RIVER BRIDGES

TYPE 2 PILE REPAIR DETAILS

SHEET NUMBER:

CONTRACT: 2014.05

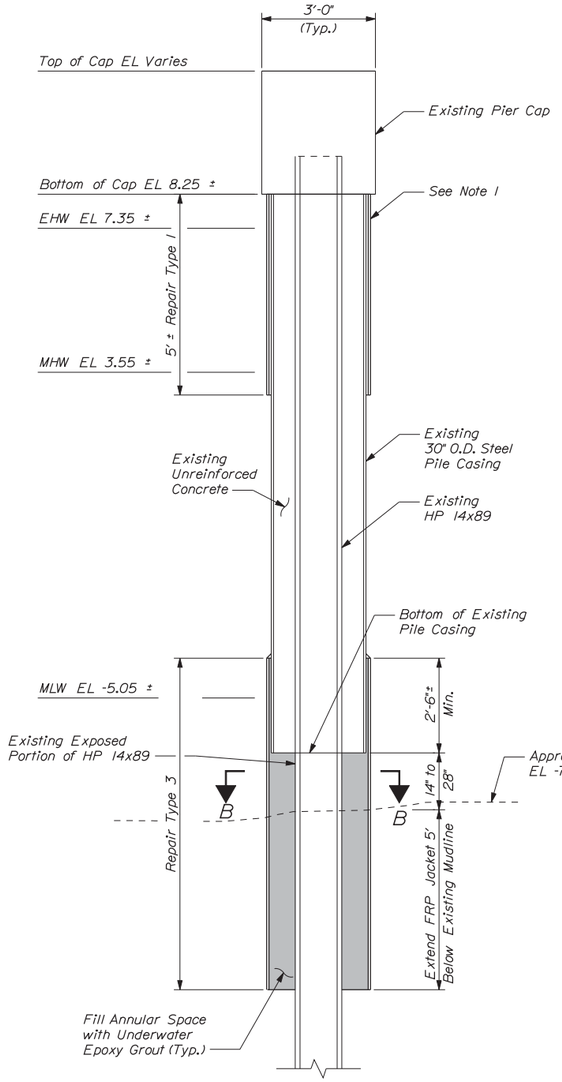

TYPICAL (TYPE 1 & 3) PILE REPAIR
SECTION A-A
(Receded Mudline)
(NB & SB Pier 7, Piles E-L)

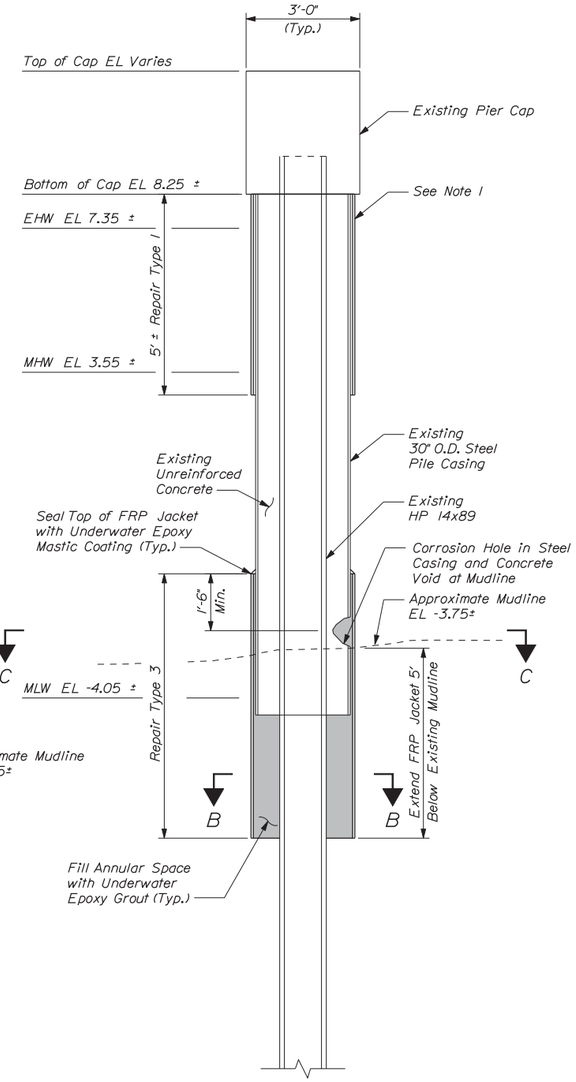

TYPICAL (TYPE 1 & 3) PILE REPAIR
SECTION A-A
(Corrosion of Steel Casing)
(NB Pier 8, Pile F, SB Pier 8, Piles J & K)

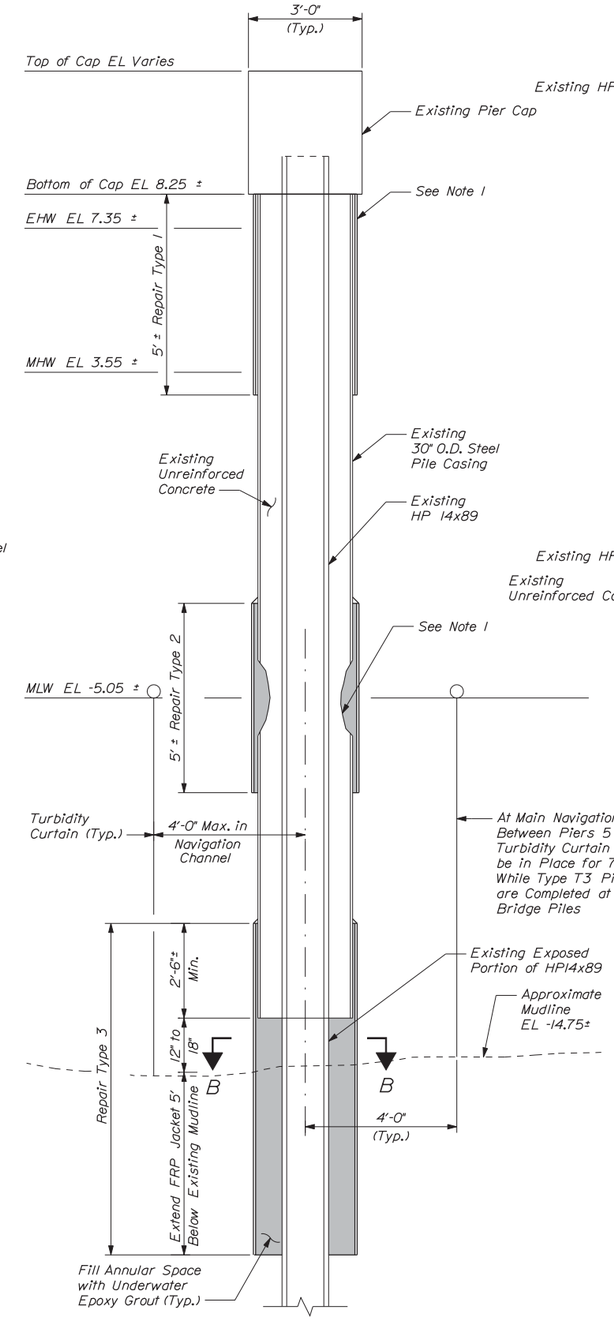

TYPICAL (TYPE 1, 2 & 3) PILE REPAIR
SECTION A-A
(NB Pier 6, Pile E & F)

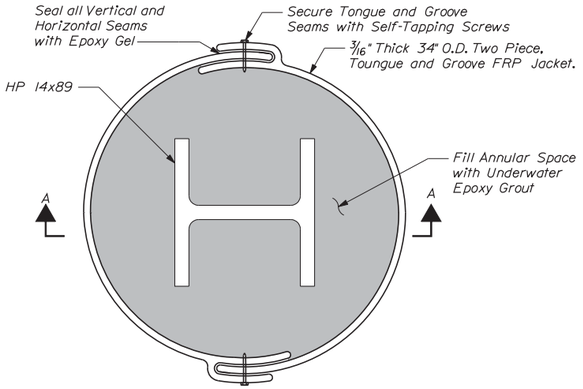

SECTION B-B

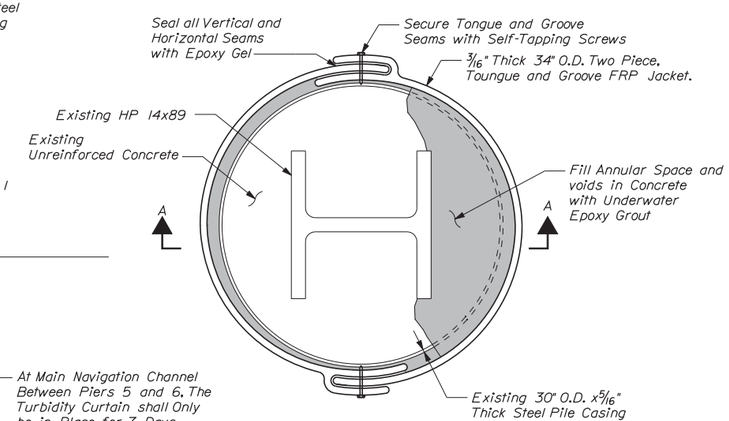

SECTION C-C

TYPE 3 PILE REPAIR NOTES:

1. Type 3 Pile Repairs are similar to Type 2 Pile Repairs and Type 2 Repairs Details are applicable to Type 3 Repairs except as noted.

2. Set up staging and shielding around pile repair area to provide access for cleaning, inspection and repair.

3. Pressure wash and mechanically clean repair area, including any area that will be encapsulated with the pile jacket. All marine life, rust and deleterious material shall be removed.

4. Prior to the start of pile repair, the Resident and the Contractor shall inspect the pile and determine the repair limits.

5. Install two piece, tongue and groove jacket, according to the applicable details on this sheet.

6. Apply epoxy gel to all seams and secure using stainless steel self-tapping screws.

7. Install bottom seal of jacket using closed foam, oakum or expanding resin or other appropriate material.

8. Use approved method to fill jacket with underwater epoxy grout.

9. See Pile Repairs Location Plan Sheet for locations and sizes of Type 3 Pile Repairs.

Date:1/23/2014

Filename: ...\planset\092_pile repair_03.dgn

Scale: As Noted

No.	Revision	By	Date

Designed by:

VHB Vanasse Hangen Brustlin, Inc.

CONSULTANT PROJECT MANAGER: T. BRYANT

	By	Date		By	Date
Designed	RSB	1/14	Checked	KJG	1/14
Drawn	BJM	1/14	In Charge of	TSB	1/14

VANASSE HANGEN BRUSTLIN, INC.
500 Southborough Dr.
Suite 105B
South Portland, ME 04106
TEL (207) 889-3150
FAX (207) 253-5596

MAINE TURNPIKE

THE GOLD STAR MEMORIAL HIGHWAY

MTA PROJECT MANAGER: Ralph C. Norwood IV, P.E.

BRIDGE REHABILITATION
YORK RIVER BRIDGES

TYPE 3 PILE REPAIR DETAILS

SHEET NUMBER:

CONTRACT: 2014.05

Date:1/23/2014

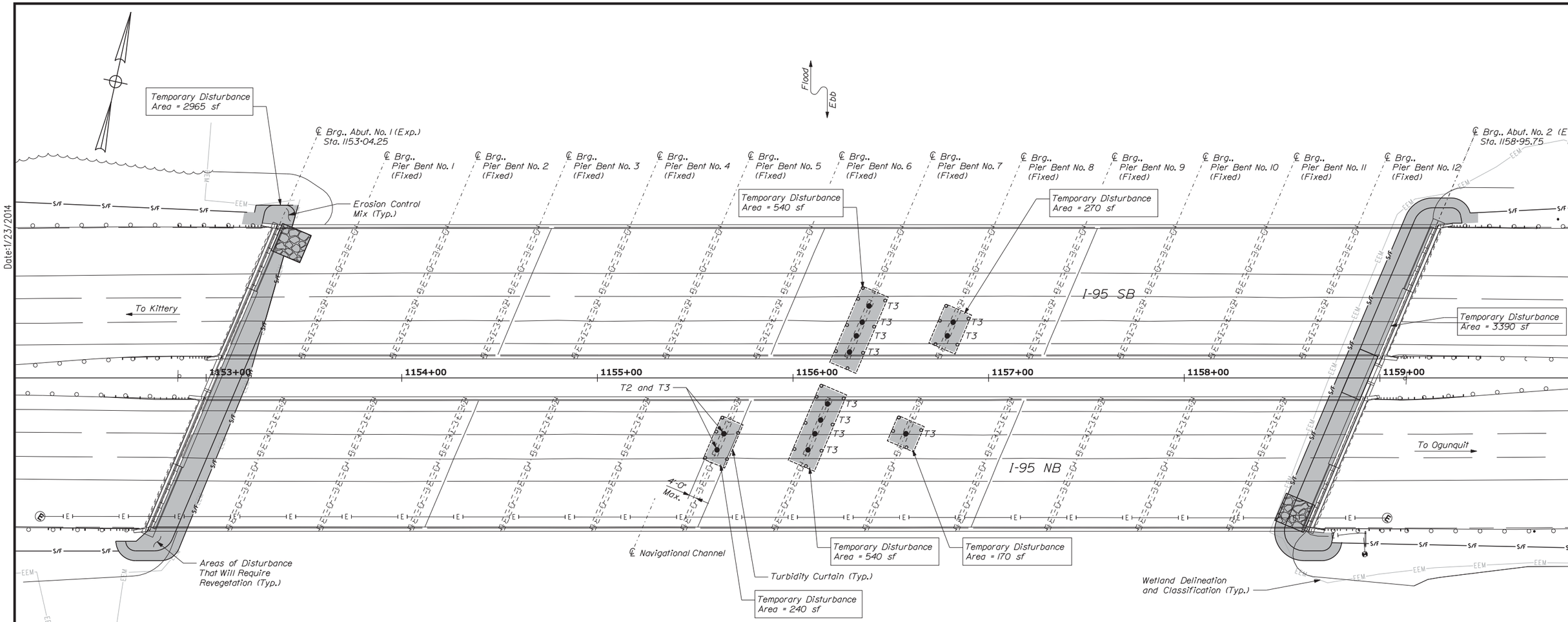

PLAN

LEGEND

- Temporary Disturbance = 30,175 sf (0.69 Acres)(Total 6 Sheets)
- Permanent Disturbance = 98,655 sf (2.26 Acres)(Total 6 Sheets)
- S/F — Silt Fence
- Turbidity Curtain
- Permanent Impervious = 47,160 sf (1.08 Acres)
- Permanent Slope = 51,525 sf (1.18 Acres)

NOTES:

1. See Disturbance Areas & Erosion Sediment Control (4 of 6) for additional impacts.

2. Turbidity curtain in navigation channel shall only be in place for 7 days while Type T3 pile repairs are completed.

3. Turbidity curtain in navigation channel shall extend a maximum of 4' from the center of pier if placed within the navigational channel.

Filename: ...\093_disturbance_impact_01.dgn

Scale: 1" = 25'-0"

25 0 25 50

Scale of Feet

No.	Revision	By	Date

Designed by:

VHB Vanasse Hangen Brustlin, Inc.

CONSULTANT PROJECT MANAGER: T. BRYANT

	By	Date		By	Date
Designed	RSB	1/14	Checked	KJG	1/14
Drawn	BJM	1/14	In Charge of	TSB	1/14

VANASSE HANGEN BRUSTLIN, INC.
500 Southborough Dr.
Suite 105B
South Portland, ME 04106
TEL (207) 889-3150
FAX (207) 253-5596

MAINE TURNPIKE

THE GOLD STAR MEMORIAL HIGHWAY

MTA PROJECT MANAGER: Ralph C. Norwood IV, P.E.

BRIDGE REHABILITATION
YORK RIVER BRIDGES

DISTURBANCE AREAS &
EROSION SEDIMENT CONTROL (1 OF 6)

SHEET NUMBER:

CONTRACT: 2014.05

TEMPORARY = 30,175 SF (0.69 ACRES)(TOTAL 6 SHEETS)

PERMANENT = 98,655 SF (2.26 ACRES)(TOTAL 6 SHEETS)

TOTAL = 128,830 SF (2.95 ACRES)(TOTAL 6 SHEETS)

S/F — SILT FENCE

PERMANENT IMPERVIOUS = 47,160 SF (1.08 ACRES)

PERMANENT SLOPE = 51,525 SF (1.18 ACRES)

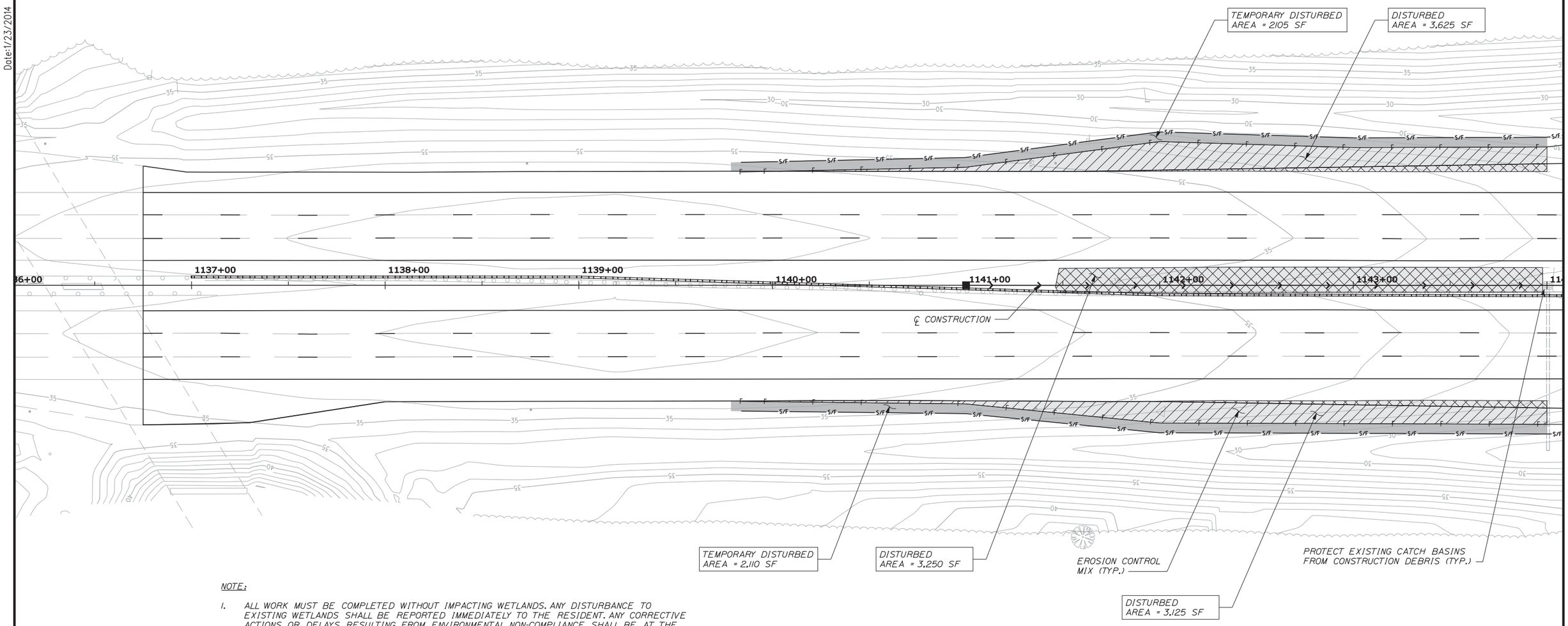

NOTE:

1. ALL WORK MUST BE COMPLETED WITHOUT IMPACTING WETLANDS. ANY DISTURBANCE TO EXISTING WETLANDS SHALL BE REPORTED IMMEDIATELY TO THE RESIDENT. ANY CORRECTIVE ACTIONS OR DELAYS RESULTING FROM ENVIRONMENTAL NON-COMPLIANCE SHALL BE AT THE SOLE COST OF THE CONTRACTOR.

Date: 1/23/2014

Filename: ...\094_DisturbanceImpact_02.dgn

Scale: 25 0 25 50

No.	Revision	By	Date

Designed by: VHB Vanasse Hangen Brustlin, Inc.

CONSULTANT PROJECT MANAGER: T. BRYANT

	By	Date		By	Date
Designed	PAC	1/14	Checked	TSB	1/14
Drawn	CLC	1/14	In Charge of	TSB	1/14

VANASSE HANGEN BRUSTLIN, INC.
500 Southborough Dr.
Suite 105B
South Portland, ME 04106
TEL (207) 889-3150
FAX (207) 253-5596

MAINE TURNPIKE

THE GOLD STAR MEMORIAL HIGHWAY

MTA PROJECT MANAGER: Ralph C. Norwood IV, P.E.

BRIDGE REHABILITATION
YORK RIVER BRIDGES

DISTURBANCE IMPACT PLANS
(2 OF 6)

SHEET NUMBER:

CONTRACT: 2014.05

Date:1/23/2014

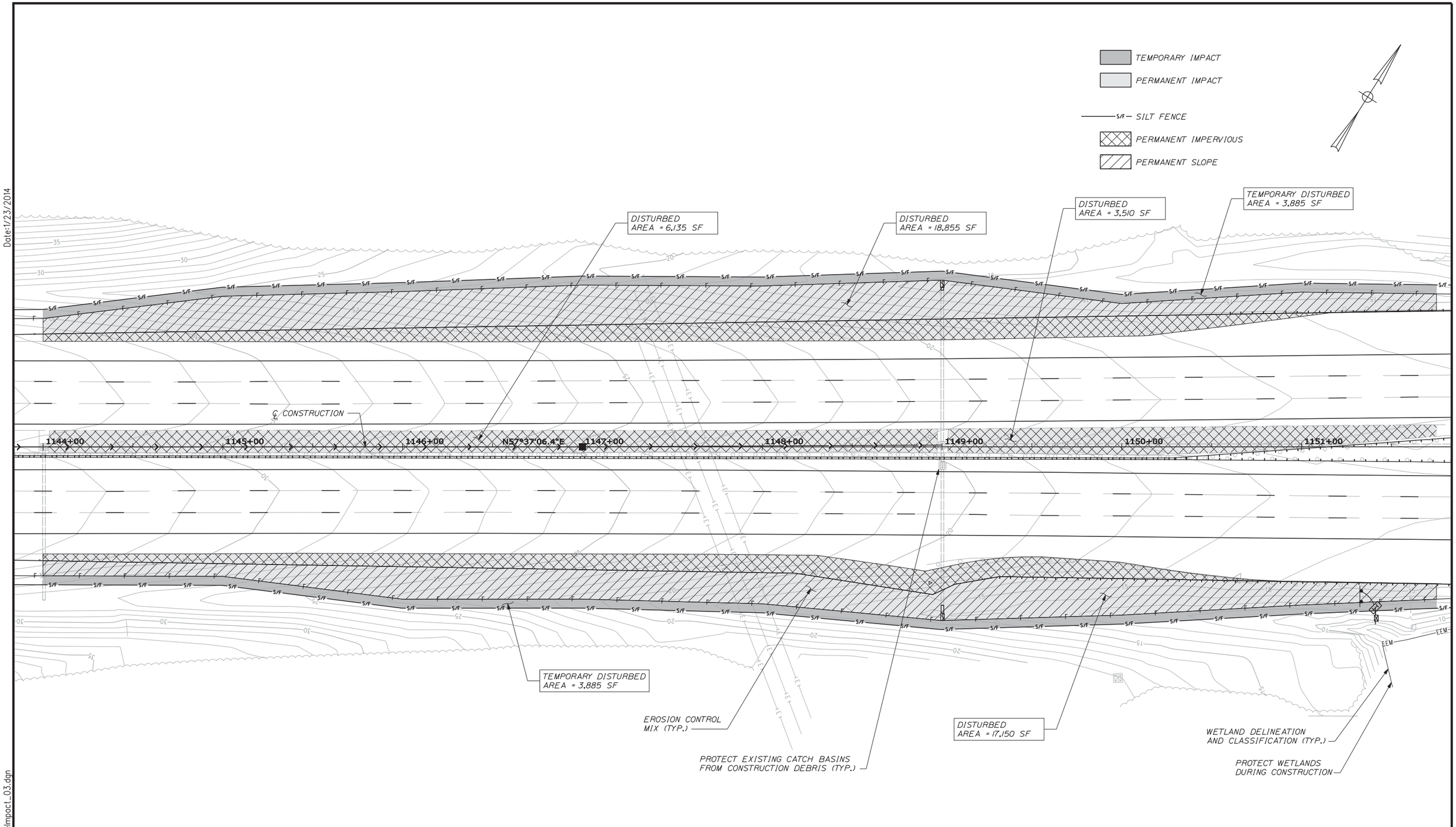

Filename: ...\095_DisturbanceImpact_03.dgn

Scale: 25 0 25 50

No.	Revision	By	Date

Designed by:

VHB Vanasse Hangen Brustlin, Inc.

CONSULTANT PROJECT MANAGER: T. BRYANT

	By	Date		By	Date
Designed	PAC	1/14	Checked	TSB	1/14
Drawn	CLC	1/14	In Charge of	TSB	1/14

VANASSE HANGEN BRUSTLIN, INC.
500 Southborough Dr.
Suite 105B
South Portland, ME 04106
TEL (207) 889-3150
FAX (207) 253-5596

MAINE TURNPIKE

THE GOLD STAR MEMORIAL HIGHWAY

MTA PROJECT MANAGER: Ralph C. Norwood IV, P.E.

BRIDGE REHABILITATION
YORK RIVER BRIDGES

DISTURBANCE AREAS &
EROSION SEDIMENT CONTROL (3 OF 6)

SHEET NUMBER:

CONTRACT: 2014.05

Date:1/23/2014

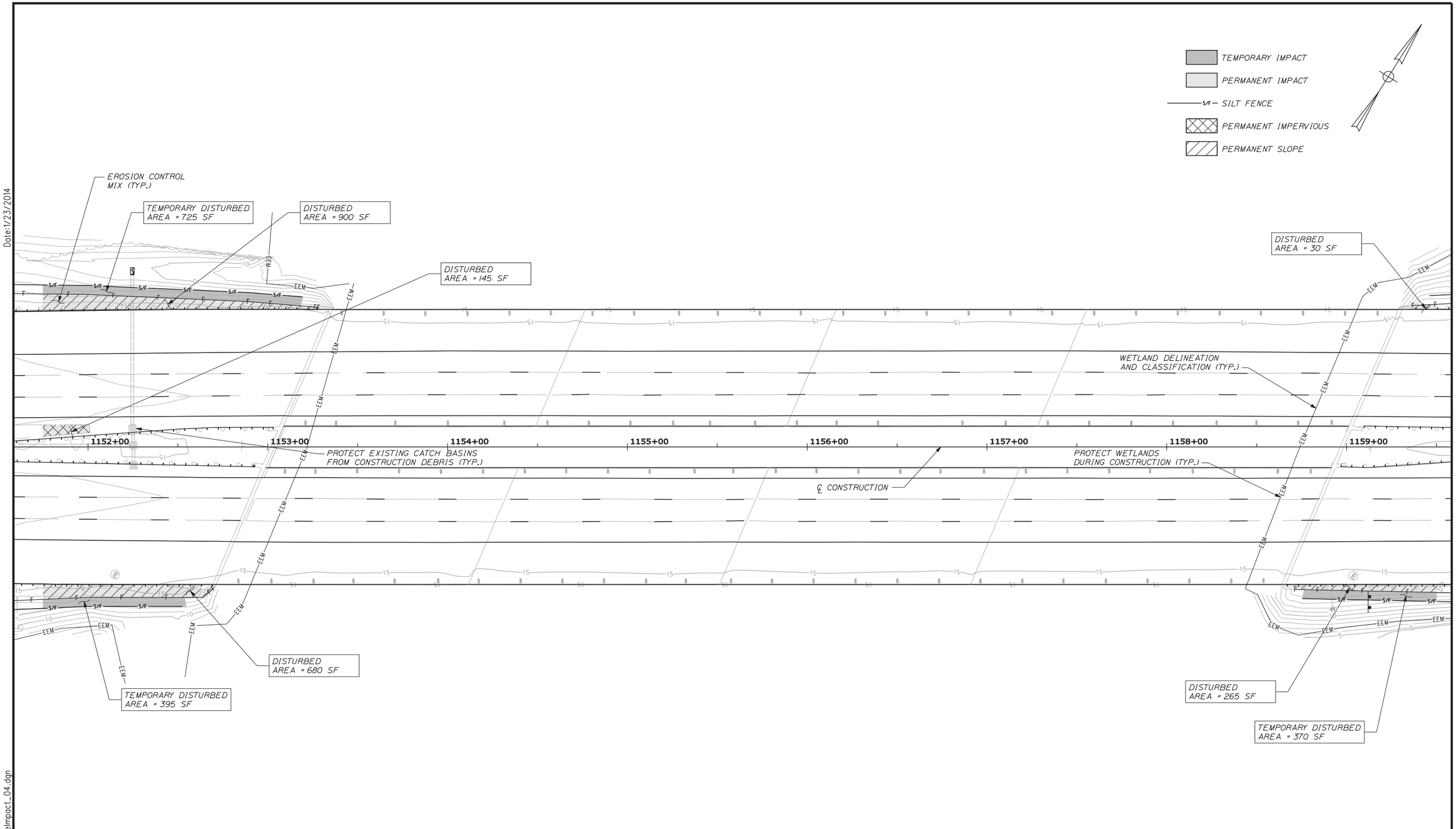

Filename: ...\096_DisturbanceImpact_04.dgn

Scale: 25 0 25 50

No.	Revision	By	Date

Designed by:

VHB Vanasse Hangen Brustlin, Inc.

CONSULTANT PROJECT MANAGER: T. BRYANT

	By	Date		By	Date
Designed	PAC	1/14	Checked	TSB	1/14
Drawn	CLC	1/14	In Charge of	TSB	1/14

VANASSE HANGEN BRUSTLIN, INC.
500 Southborough Dr.
Suite 105B
South Portland, ME 04106
TEL (207) 889-3150
FAX (207) 253-5596

MAINE TURNPIKE

THE GOLD STAR MEMORIAL HIGHWAY

MTA PROJECT MANAGER: Ralph C. Norwood IV, P.E.

BRIDGE REHABILITATION
YORK RIVER BRIDGES

DISTURBANCE AREAS &
EROSION SEDIMENT CONTROL (4 OF 6)

SHEET NUMBER:

CONTRACT: 2014.05

Date:1/23/2014

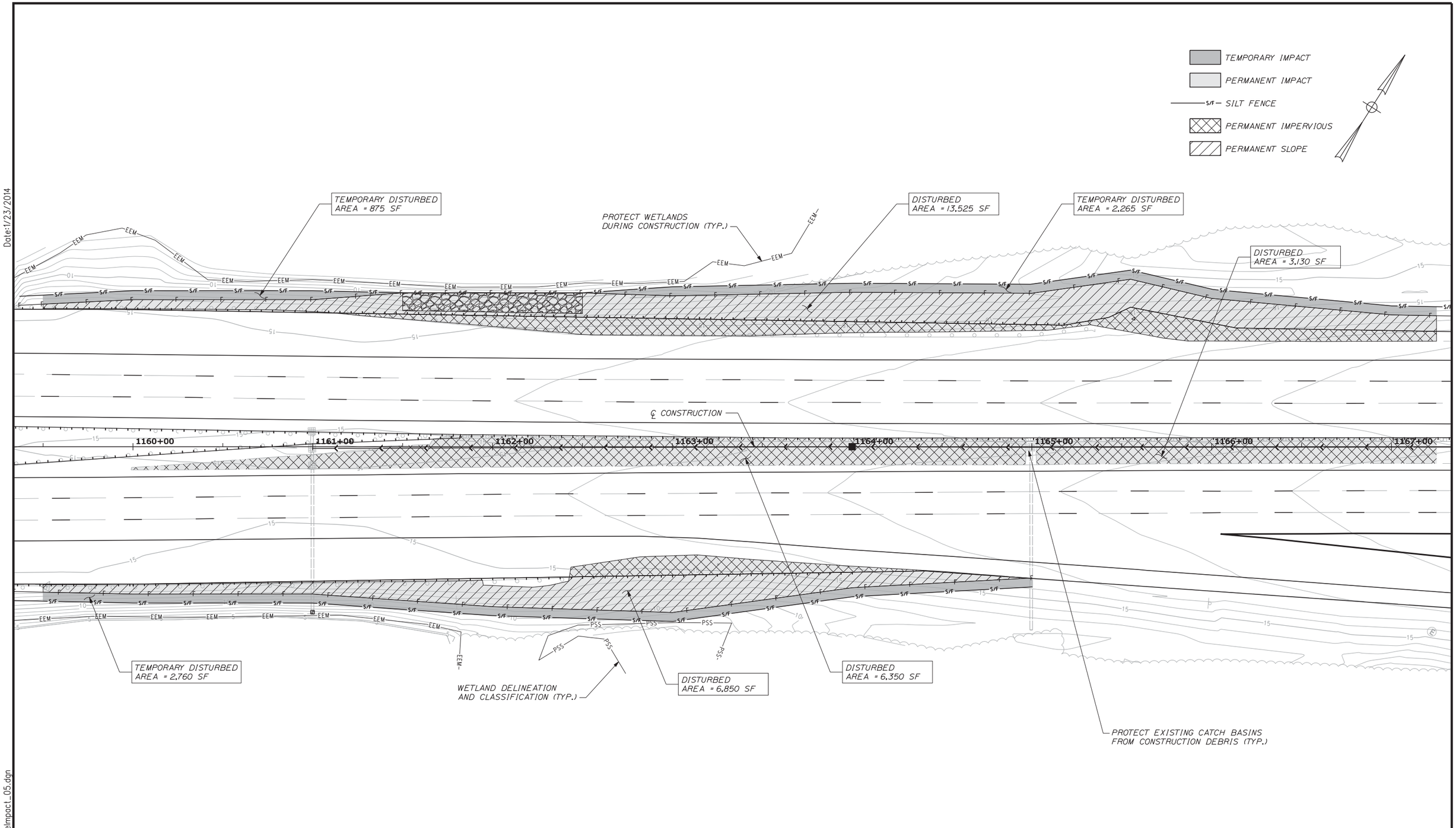

Filename: ...\097_DisturbanceImpact_05.dgn

Scale: 25 0 25 50

No.	Revision	By	Date

Designed by:

Vanasse Hangen Brustlin, Inc.

CONSULTANT PROJECT MANAGER: T. BRYANT

	By	Date		By	Date
Designed	PAC	1/14	Checked	TSB	1/14
Drawn	CLC	1/14	In Charge of	TSB	1/14

VANASSE HANGEN BRUSTLIN, INC.
500 Southborough Dr.
Suite 105B
South Portland, ME 04106
TEL (207) 889-3150
FAX (207) 253-5596

MAINE TURNPIKE

THE GOLD STAR MEMORIAL HIGHWAY

MTA PROJECT MANAGER: Ralph C. Norwood IV, P.E.

BRIDGE REHABILITATION
YORK RIVER BRIDGES

DISTURBANCE AREAS &
EROSION SEDIMENT CONTROL (5 OF 6)

SHEET NUMBER:

CONTRACT: 2014.05

Date:1/23/2014

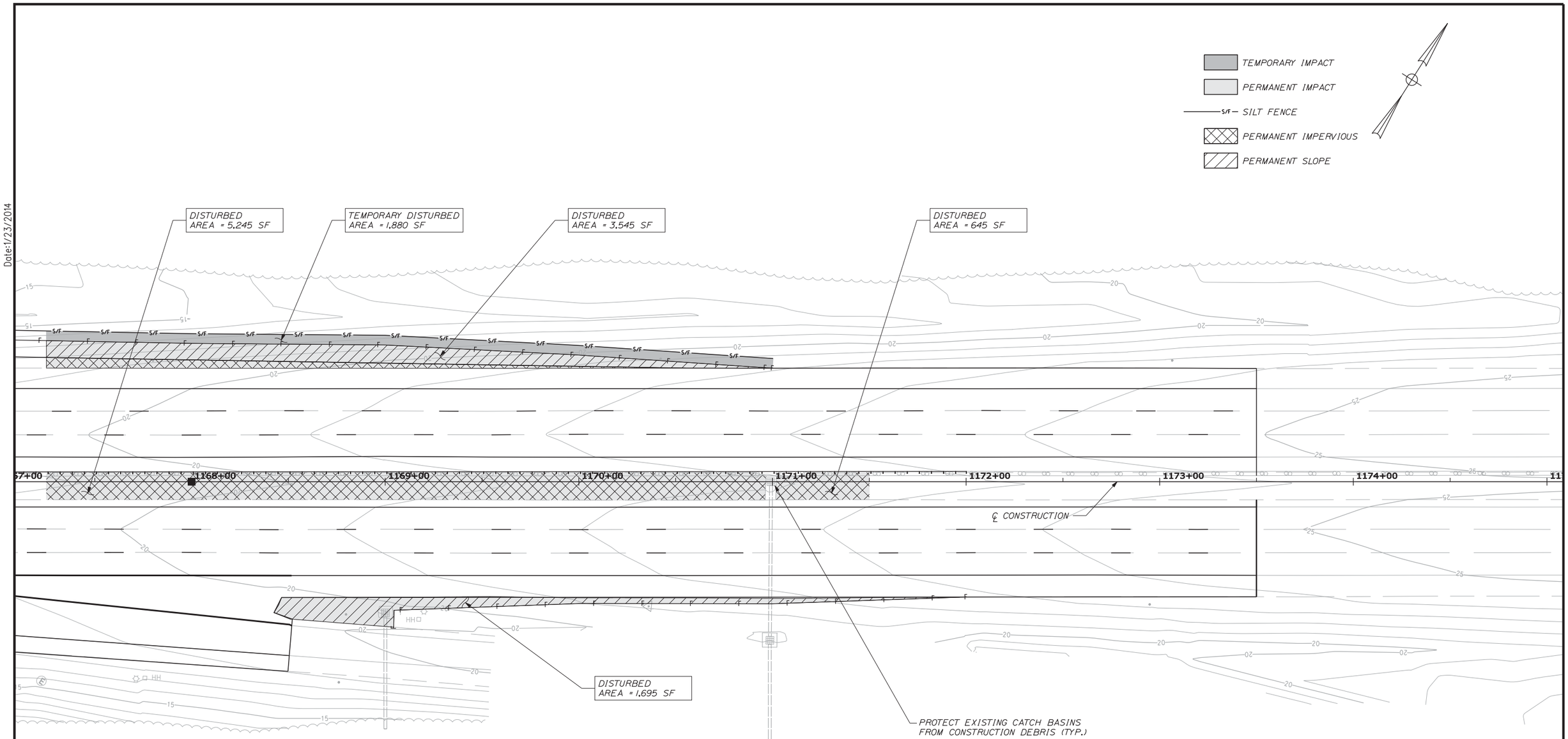

Filename: ...\098_DisturbanceImpact_06.dgn

Scale: 25 0 25 50

No.	Revision	By	Date

Designed by:

VHB Vanasse Hangen Brustlin, Inc.

CONSULTANT PROJECT MANAGER: T. BRYANT

	By	Date		By	Date
Designed	PAC	1/14	Checked	TSB	1/14
Drawn	CLC	1/14	In Charge of	TSB	1/14

VANASSE HANGEN BRUSTLIN, INC.
500 Southborough Dr.
Suite 105B
South Portland, ME 04106
TEL (207) 889-3150
FAX (207) 253-5596

MAINE TURNPIKE

THE GOLD STAR MEMORIAL HIGHWAY

MTA PROJECT MANAGER: Ralph C. Norwood IV, P.E.

BRIDGE REHABILITATION
YORK RIVER BRIDGES

DISTURBANCE AREAS &
EROSION SEDIMENT CONTROL (6 OF 6)

SHEET NUMBER:

CONTRACT: 2014.05

STRAIGHT BARS

MARK	QTY.	LENGTH	LOCATION	MARK	QTY.	LENGTH	LOCATION
Deck Slab and Curbs							
S501	600	3'-1"	Vertical Bars into Backwall				
S506	114	35'-6"	NB Transverse Joint Bars				
S507	114	38'-10"	NB Trans Joint Bars (Mech. Splice with S506)				
S508	114	39'-3"	SB Transverse Joint Bars				
S509	114	35'-0"	SB Trans Joint Bars (Mech. Splice with S508)				
S510	16	5'-0"	Long. Curb Bars (At Abutment)				
S511	8	10'-0"	Long. Curb Bars (At Abut)				
S512	48	8'-0"	Long. Curb Bars (At Pin and Links)				
S513	24	13'-0"	Long. Curb Bars (At Pin and Links)				
Modified Concrete Transition Barrier							
MTB500	80	4'-6"	Modified Concrete Transition Barrier				
MTB501	16	1'-8"					
MTB502	16	1'-8"					
MTB503	16	1'-7"					
MTB504	16	1'-7"					
MTB505	16	1'-6"					
MTB506	8	7'-0"					
MTB507	8	7'-8"					
MTB508	8	5'-0"					
MTB509	8	7'-7"					
MTB510	8	7'-7"					
MTB511	8	7'-2"					
MTB512	8	4'-5"					
MTB513	8	6'-11"					

BENT BARS

MARK	QTY.	LENGTH	TYPE	A	B	C	D	E	F	G	H	O	R	LOCATION
Deck Slab and Curbs														
S556	800	2'-2"	L	1'-6"	0'-8"									L-Bars in Deck at Joint
S557	800	2'-0"	SL		0'-7"	0'-10"	0'-7"							U-Bars in Deck at Joint
S558	224	1'-9"	L	1'-3"	0'-6"									L-Bars in Curb to Curb Joint
S559	344	3'-5"	SL		1'-6"	1'-4"	0'-7"							U-Bars in Curb at Joint
S560	344	2'-10"	L	1'-6"	1'-4"									L-Bars in Curb at Joint
Substructure														
A551	96	3' - 10"	L	1'-10"	2'-0"									L-Bars in Abutment Pedestals (5-12)
A552	64	3' - 2"	SL		0'-9"	1'-8"	0'-9"							U-Bars in Abutment Pedestals (5-12)
A553	96	4' - 1"	L	2'-1"	2'-0"									L-Bars in Abutment Pedestals (1-4) & (13-16)
A554	64	3' - 6"	SL		0'-11"	1'-8"	0'-11"							U-Bars in Abutment Pedestals (1-4) & (13-16)
Modified Concrete Transition Barrier														
MTB550	40	9'-5"	H	0'-5 1/2"	1'-0"	3'-3"	1'-0"	3'-3"		0'-5 1/2"				Modified Concrete Transition Barrier
MTB551	112	4'-8"	L	2'-4"	2'-4"									
MTB552	4	3'-1"	S	0'-0"	0'-8"	1'-9"	0'-8"			0'-0"				
MTB553	112	3'-2"	L	2'-4"	0'-10"									
MTB554	4	3'-8"	S	0'-0"	0'-8"	2'-4"	0'-8"			0'-0"				
MTB555	4	3'-0"	S	0'-0"	0'-8"	1'-8"	0'-8"			0'-0"				
MTB556	4	3'-8"	S	0'-0"	0'-8"	2'-4"	0'-8"			0'-0"				
MTB650	32	4'-1"	S	0'-0"	1'-9"	0'-7"	1'-9"			0'-0"				
MTB651	24	4'-3"	H	0'-6"	0'-5 1/2"	1'-2"	0'-5 1/2"	1'-2"		0'-6"				
MTB652	56	8'-7"	H	0'-6"	0'-10 1/2"	2'-11"	0'-10 1/2"	2'-11"		0'-6"				

TYPE - BENDING DIAGRAMS

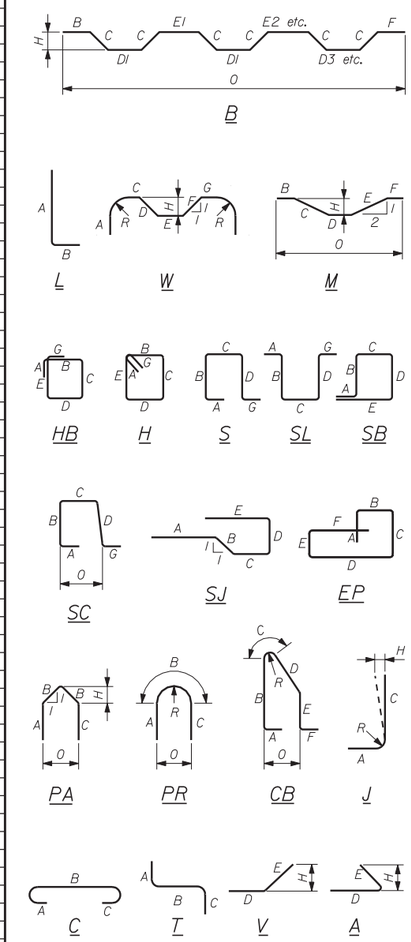

All dimensions are out-to-out of bar.

Bending details and hooks shall conform to the recommendations of the current revision of ACI Standard 315 and ACI Standard 318.

Reinforcing Bar: ASTM A615/A615M, Grade 60

GENERAL NOTES

1. The first digit following the letter(s) of the mark indicate the size of the bar:

   Mark "A502" = bar size #5
   Mark "P805" = bar size #8
   Mark "S650" = bar size #6

Scale:

No.	Revision	By	Date

Designed by:

Vanasse Hangen Brustlin, Inc.

CONSULTANT PROJECT MANAGER: T. BRYANT

	By	Date		By	Date
Designed	KJG	1/14	Checked	JAW	1/14
Drawn	CLC	1/14	In Charge of	TSB	1/14

VANASSE HANGEN BRUSTLIN, INC.
500 Southborough Dr.
Suite 105B
South Portland, ME 04106
TEL (207) 889-3150
FAX (207) 253-5596

MAINE TURNPIKE

THE GOLD STAR MEMORIAL HIGHWAY

MTA PROJECT MANAGER: Ralph C. Norwood IV, P.E.

BRIDGE REHABILITATION
YORK RIVER BRIDGES

REINFORCING STEEL SCHEDULE

CONTRACT: 2014.05

SHEET NUMBER:

Date: 1/23/2014

Filename: ...\st\planset\099_reinsch_01.dgn

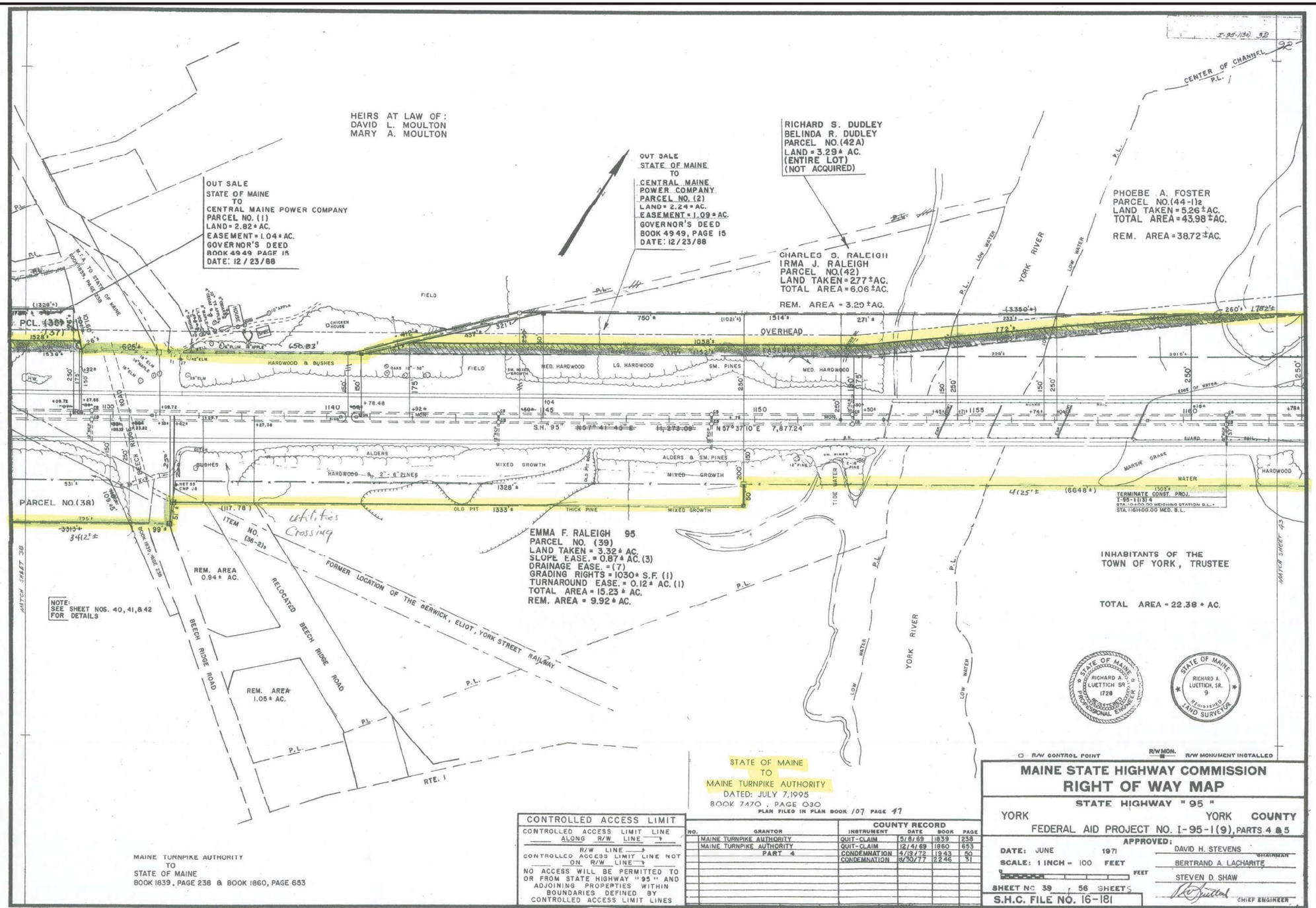

Date: 1/23/2014

Filename: ...\100_Right-of-Way_01.dgn

Scale:

No.	Revision	By	Date

Designed by:

VHB Vanasse Hangen Brustlin, Inc.

CONSULTANT PROJECT MANAGER: T. BRYANT

	By	Date		By	Date
Designed	RSB	1/14	Checked	KJG	1/14
Drawn		1/14	In Charge of	TSB	1/14

VANASSE HANGEN BRUSTLIN, INC.
500 Southborough Dr.
Suite 105B
South Portland, ME 04106
TEL (207) 889-3150
FAX (207) 253-5596

MAINE TURNPIKE

THE GOLD STAR MEMORIAL HIGHWAY

MTA PROJECT MANAGER: Ralph C. Norwood IV, P.E.

BRIDGE REHABILITATION
YORK RIVER BRIDGES

RIGHT OF WAY MAP

SHEET NUMBER:

CONTRACT: 2014.05

100 OF 103

CUTTS ROAD BRIDGE

ESTIMATED QUANTITIES			
ITEM NO.	DESCRIPTION	QUANTITY	UNIT
504.813	Structural Steel Repairs - Web Stiffener Repairs	10	EA
506.9102	Zinc Rich Coating System (Shop Applied)	1	LS
652.3	Flashing Arrow Board	2	EA
652.33	Drum	90	EA
652.35	Construction Signs	308	SF
652.361	Maintenance of Traffic Control Devices	1	LS
652.45	Truck Mounted Attenuator	10	CD
659.1	Mobilization	1	LS

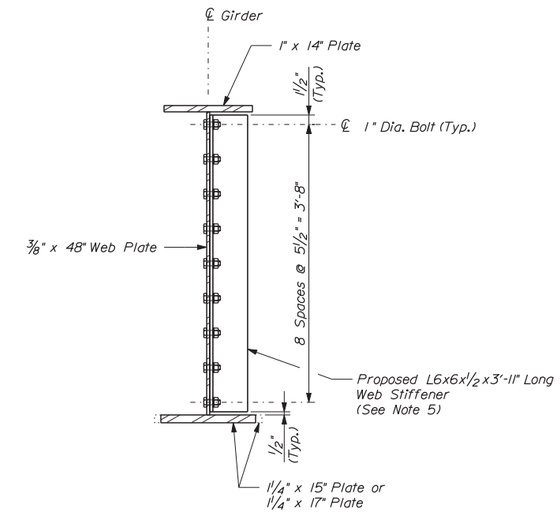

TYPICAL GIRDER SECTION

NOTES:

1. Intermediate web stiffeners may be either plumb or normal to the top flange.

2. All faying surfaces shall be painted or sealed in accordance with FHWA Technical Advisory T5140.22, Section 4.c.2.c to prevent the formation of pack rust.

3. The steel portions of the existing bridge are coated with a lead-based paint system. The Contractor is responsible for the containment and proper management of all lead-contaminated steel. The Contractor is responsible for implementing appropriate OSHA mandated personal protection standards related to this process.

4. Welding to existing structure shall not be permitted other than shown in the plans unless approved by the Resident.

5. Shop drill proposed web stiffener angle and field drill through web using the holes in the angle as a template

Date:1/23/2014

Filename: ...\st\planset\101_from_dt_CR.dgn

Scale: 1" = 1'-0"

No.	Revision	By	Date

Designed by:

VHB Vanasse Hangen Brustlin, Inc.

CONSULTANT PROJECT MANAGER: T. BRYANT

	By	Date		By	Date
Designed	RSB	1/14	Checked	KJG	1/14
Drawn	BJM	1/14	In Charge of	TSB	1/14

VANASSE HANGEN BRUSTLIN, INC.
500 Southborough Dr.
Suite 105B
South Portland, ME 04106
TEL (207) 889-3150
FAX (207) 253-5596

MAINE TURNPIKE

THE GOLD STAR MEMORIAL HIGHWAY

MTA PROJECT MANAGER: Ralph C. Norwood IV, P.E.

BRIDGE REHABILITATION
CUTTS ROAD BRIDGE

ESTIMATED QUANTITIES, NOTES & DETAILS

CONTRACT: 2014.05

SHEET NUMBER:
101 OF 103

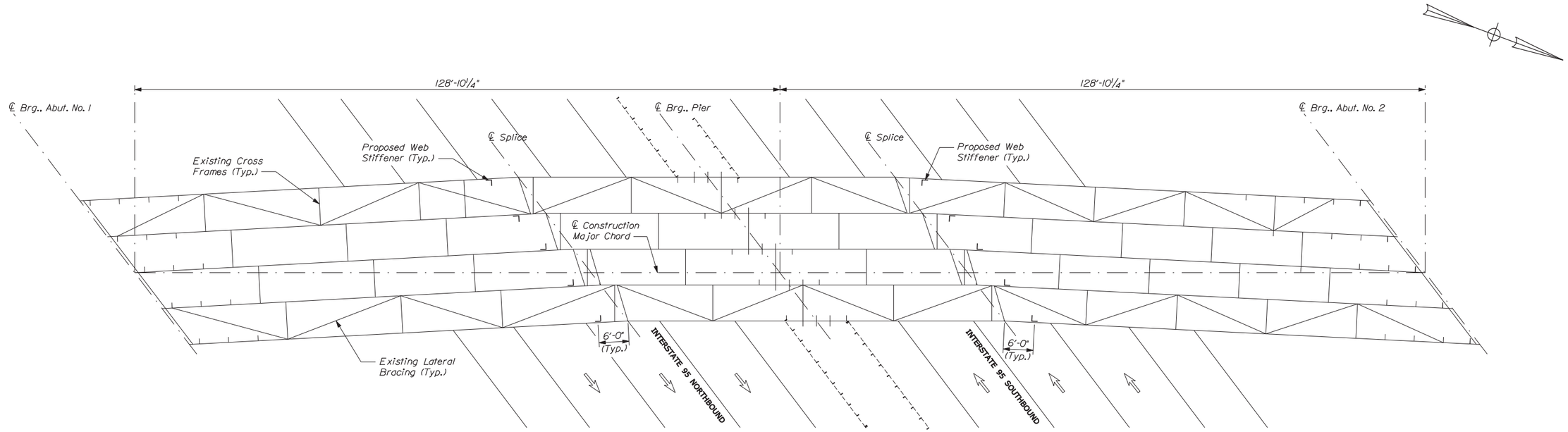

FRAMING PLAN
Scale: 3/32" = 1'-0"

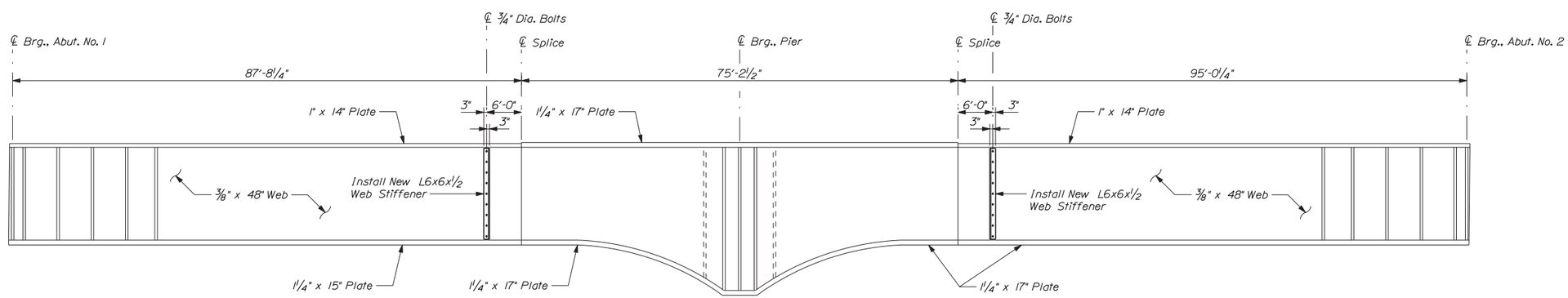

GIRDER ELEVATION
Not to Scale

Date:1/23/2014

Filename: ...\planset\102_framing_CR_01.dgn

Scale: As Noted

No.	Revision	By	Date

Designed by:

VHB Vanasse Hangen Brustlin, Inc.

CONSULTANT PROJECT MANAGER: T. BRYANT

	By	Date		By	Date
Designed	RSB	1/14	Checked	KJG	1/14
Drawn	BJM	1/14	In Charge of	TSB	1/14

VANASSE HANGEN BRUSTLIN, INC.
500 Southborough Dr.
Suite 105B
South Portland, ME 04106
TEL (207) 889-3150
FAX (207) 253-5596

MAINE TURNPIKE

THE GOLD STAR MEMORIAL HIGHWAY

MTA PROJECT MANAGER: Ralph C. Norwood IV, P.E.

BRIDGE REHABILITATION
CUTTS ROAD BRIDGE

FRAMING PLAN & GIRDER ELEVATION

SHEET NUMBER:

CONTRACT: 2014.05

MAINTENANCE OF TRAFFIC FOR THE CUTTS ROAD BRIDGE

1. See the Maintenance of Traffic General Notes on Maintenance of Traffic Notes & Summary For York River Bridges for additional traffic control information.

2. Double lane closures on the right side (single left lane open) are proposed along I-95 northbound and southbound for the Cutts Road Bridge repairs. These double lane closures are restricted to nighttime operations between 10PM and 5AM.

3. Work on the Cutts Road Bridge may occur simultaneously with work along the York River Bridges; however, the Contractor shall strive to avoid conflicting traffic control layouts between the two segments of the project. If the END ROAD WORK signing for one layout conflicts with the advanced work zone signing for the downstream layout, the intermediate END ROAD WORK sign shall be removed.

4. In the event traffic through the work zone is slowed to the point of stop-and-go operations, the "EXPECT STOPPED TRAFFIC" and "BE PREPARED TO STOP" signs shall be used. These signs may be covered or turned away from traffic if traffic is substantially free flowing.

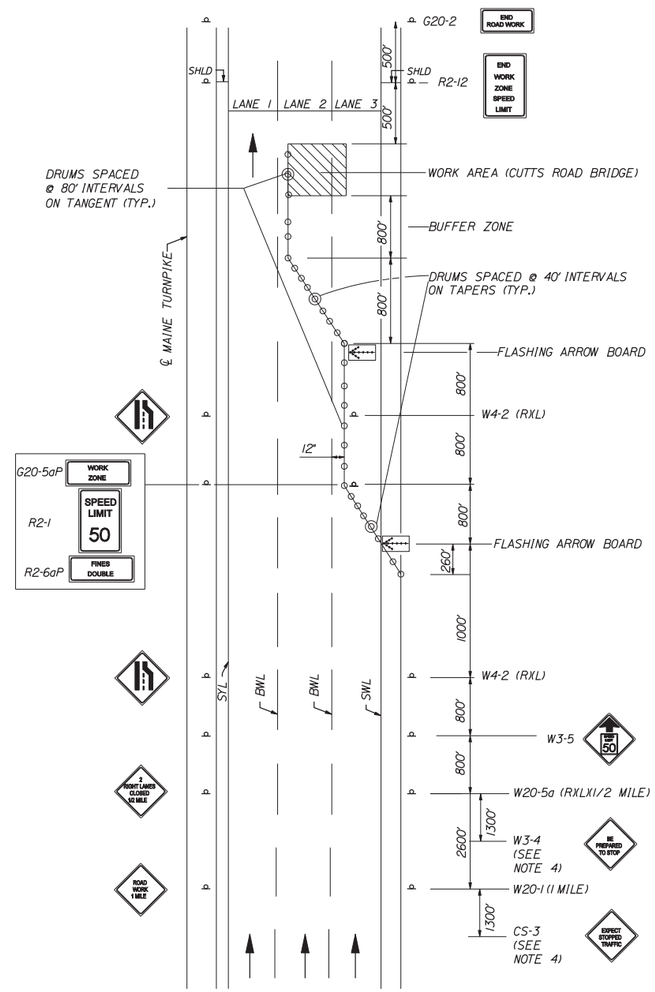

NIGHTTIME LANE CLOSURE
(MAINLINE)

DOUBLE LANE CLOSURE
FOR WORK AT CUTTS ROAD BRIDGE

TEMPORARY LANE & ROADWAY CLOSURES

CONSTRUCTION SIGN SUMMARY

Sign		Text Dimensions (Inches) Letter Height	Text Dimensions (Inches) Vertical Spacing	Size	Quantity and Color
CS-3	EXPECT STOPPED TRAFFIC	7" 7" 7"	4" 4"	48"x48"	2 - Black on Orange
G20-2	END ROAD WORK	Text Dimensions Shall Conform to "Standard Highway Signs" - 2012		36"x18"	2 - Black on Orange
G20-5aP	WORK ZONE			36"x24"	2 - Black on Orange
R2-1(50)	SPEED LIMIT 50			36"x48"	2 - Black on White
R2-6aP	FINES DOUBLE			36"x24"	2 - Black on White
R2-12	END WORK ZONE SPEED LIMIT			36"x54"	2 - Black on White
W3-4	BE PREPARED TO STOP			48"x48"	2 - Black on Orange
W3-5(50)	STOP 50			48"x48"	2 - Black on Orange
W4-2(R)				48"x48"	4 - Black on Orange
W20-1 (1 MILE)	ROAD WORK 1 MILE			48"x48"	2 - Black on Orange
W20-5aR (2012 SUPPLEMENT)	2 RIGHT LANES CLOSED 1/2 MILE			48"x48"	2 - Black on Orange

Date:1/23/2014

Filename: ...\st\planset\103_TCP_Notes.dgn

Scale: 200 0 200 400
Scale of Feet

No.	Revision	By	Date

Designed by:

Vanasse Hangen Brustlin, Inc.

CONSULTANT PROJECT MANAGER: T. BRYANT

	By	Date		By	Date
Designed	RSB	1/14	Checked	KJG	1/14
Drawn	JAR	1/14	In Charge of	TSB	1/14

VANASSE HANGEN BRUSTLIN, INC.
500 Southborough Dr.
Suite 105B
South Portland, ME 04106
TEL (207) 889-3150
FAX (207) 253-5596

MAINE TURNPIKE

THE GOLD STAR MEMORIAL HIGHWAY

MTA PROJECT MANAGER: Ralph C. Norwood IV, P.E.

BRIDGE REHABILITATION
CUTTS ROAD BRIDGE
MAINTENANCE OF TRAFFIC
NOTES & DETAILS

CONTRACT: 2014.05

SHEET NUMBER:
103 OF 103