CONTRACT 2015.09

Date:8/12/2015

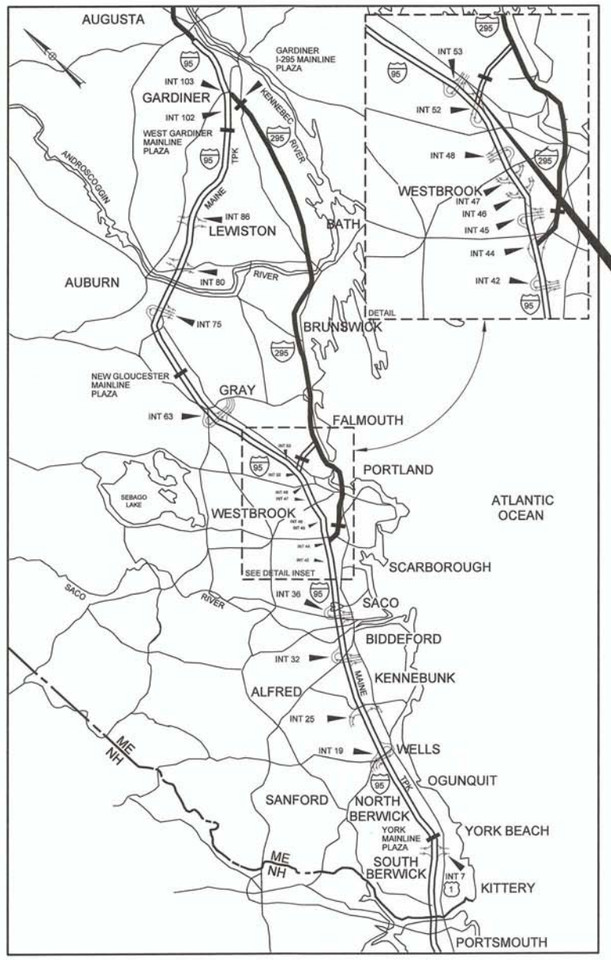

INTERCHANGE 53
TOLL SYSTEM UPGRADES
(MM 52.4)

LOCATION MAP

MAINE TURNPIKE

THE GOLD STAR
MEMORIAL HIGHWAY

MAINE TURNPIKE AUTHORITY

DANIEL E. WATHEN, CHAIR
JAMES F. CLOUTIER, VICE CHAIR
GERARD P. CONLEY, SR., MEMBER
JOHN E. DORITY, MEMBER
ROBERT D. STONE, MEMBER
FREEMAN R. GOODRICH, MEMBER
KAREN DOYLE, MEMBER EX-OFFICIO

S. PETER MILLS, EXECUTIVE DIRECTOR

INTERCHANGE 53
TOLL PLAZA REPLACEMENT
(MM 52.4)
CONTRACT 2015.09

INDEX OF SHEETS

HIGHWAY

SHEET NO.	DESCRIPTION
1	TITLE SHEET
2	ESTIMATED QUANTITIES AND EARTHWORK SUMMARY
3-4	GENERAL NOTES
5-6	TYPICAL SECTIONS
7-16	MAINTENANCE OF TRAFFIC
17-24	TEMP DETOUR PLANS
25-26	GUARDRAIL DETAILS
27	EROSION CONTROL DETAILS
28	LIGHTING DETAILS
29	SIGNING DETAILS
30	MISCELLANEOUS DETAILS
31-32	GENERAL PLAN
33	LIMIT OF DISTURBANCE PLAN
34	SITE GRADING PLAN
35-36	SIGNING AND STRIPING PLANS
37-39	SIGN SUMMARIES
40-46	CROSS SECTIONS

STRUCTURAL

SHEET NO.	DESCRIPTION
47-67	STRUCTURAL PLANS

MECHANICAL AND ELECTRICAL

SHEET NO.	DESCRIPTION
68-79	MECHANICAL AND ELECTRICAL PLANS

BUILDING AND ARCHITECTURAL

SHEET NO.	DESCRIPTION
80-95	BUILDING AND ARCHITECTURAL PLANS

CONTRACT 2015.09

STATE OF MAINE
Kurt F. Magnusson 10257
LICENSED
PROFESSIONAL ENGINEER

MECHANICAL SYSTEMS ENGINEERS

MECHANICAL DESIGN
MECHANICAL SYSTEMS ENGINEERS
SHEETS EM-01 TO EM-12
KURT MAGNUSSON, P.E. — DATE 8/12/15

HNTB

STATE OF MAINE
LAWRENCE E. BARTLETT No. 7928
LICENSED
PROFESSIONAL ENGINEER

Bartlett Design

ELECTRICAL DESIGN
BARTLETT DESIGN
SHEETS GP-01 AND GP-02
AND EM-01 AND EM-12
LAWRENCE E. BARTLETT, P.E. — DATE 8/12/15

STATE OF MAINE
ROLAND A. LAVALLEE No. 6452
LICENSED
PROFESSIONAL ENGINEER

ROLAND A. LAVALLEE P.E., PLS
VICE PRESIDENT
DIRECTOR OF OPERATIONS
DATE 8/12/15

APPROVED:
MAINE TURNPIKE AUTHORITY

WILLIAM H. YATES - DIRECTOR OF IT AND COMMUNICATIONS — DATE 14AUG15

STEPHEN R. TANTRE, P.E., - DIRECTOR OF ENGINEERING & BUILDING MAINTENANCE — DATE 8/15/15

Filename: 001_MTATitle.dgn

Item No.	Item Description	Supplemental Description	Unit	Total Quantity
202.081	Remove Utility Building		LS	1
202.17	Removing Existing Structural Concrete	132 CY	LS	1
202.202	Removing Pavement Surface		SY	600
203.20	Common Excavation		CY	7300
206.08	Structural Earth Excavation – Major Structures		CY	280
304.09	Aggregate Base Course - Crushed		CY	850
304.10	Aggregate Subbase Course - Gravel		CY	1700
403.207	Hot Mix Asphalt, 19.0 mm Nominal Maximum Size		TON	970
403.2083	Hot Mix Asphalt, 12.5 mm (Polymer Modified)		TON	650
403.209	Hot Mix Asphalt, 9.5 mm Nominal Maximum Size (sidewalks, drives, islands & incidentals)		TON	84
403.211	Hot Mix Asphalt (shimming)		TON	25
403.213	Hot Mix Asphalt, 12.5 mm Nominal Maximum Size, Base		TON	830
409.15	Bituminous Tack Coat, Applied		GAL	800
419.30	Sawing Bituminous Pavement		LF	2100
424.323	Asphalt Rubber Fiber Crack Sealer - Applied		LB	60
502.262	Structural Concrete, Pavement Slabs		CY	190
502.263	Structural Concrete - Plaza Islands, Bumpers and Curtain Walls		CY	80
502.265	Structural Concrete - Utilty Pits		CY	45
502.266	Structural Concrete - Pedestals & Footings		CY	25
503.14	Epoxy-Coated Reinforcing Steel, Fabricated and Delivered		LB	28600
503.15	Epoxy-Coated Reinforcing Steel, Placing		LB	28600
503.18	Glass Fiber Reinforced Polymer (GFRP) Reinforcing Bars, Fabricated and Delivered		LB	15500
503.19	Glass Fiber Reinforced Polymer (GFRP) Reinforcing Bars, Placing		LB	15500
503.90	Synthetic Fiber Reinforcement		LB	960
510.302	Special Detour - Temporary Interchange Ramp		LS	1
511.091	Temporary Earth Support Systems		LS	1
515.202	Clear Protective Coating for Concrete Surfaces		SY	750
515.23	Epoxy Overlay		SY	30
526.306	Temporary Concrete Barrier Type I - Supplied by Authority	820 LF	LS	1
527.342	Work Zone Crash Cushions - TL-2		UNIT	2
603.155	12 inch Reinforced Concrete Pipe - Class III		LF	40
603.159	12 inch Culvert Pipe Option III		LF	31
603.169	15 inch Culvert Pipe Option III		LF	16
603.195	24 inch Reinforced Concrete Pipe - Class III		LF	320
604.072	Catch Basin Type A1-C		EA	1
604.09	Catch Basin Type B1		EA	2
604.11	Catch Basin Type C1		EA	1
604.246	Catch Basin Type F5		EA	1
605.11	12 inch Underdrain Type C		LF	190
606.1723	Bridge Transition - Type III		EA	2
606.178	Guardrail Beam		LF	50
606.24	Guardrail Type 3d - Single Rail		LF	25
606.265	Terminal End - Single Rail		EA	2
606.278	Terminal End - Anchored End		EA	3
606.353	Delineator Post		EA	13
606.354	Delineator Post - Remove and Reset		EA	8
606.3605	Guardrail - Remove, Modify, and Reset, Single Rail		LF	187.5
606.3607	Guardrail - Remove and Reset, Single Rail		LF	425
606.3608	Guardrail - Remove and Reset, Double Rail		LF	450
606.3631	Guardrail - Remove, Stack and Dispose		LF	190
606.471	Single Offset Block - W-Beam		EA	25
606.48	Single Galvanized Steel Post		EA	25
606.80	Guardrail 350 FLEAT Terminal		EA	1
606.81	Guardrail 350 FLEAT Terminal- Remove and Reset		EA	1
608.08	Reinforced Concrete Sidewalk		SY	140
609.11	Vertical Curb Type 1		LF	350
609.12	Vertical Curb Type 1 - Circular		LF	120
609.191	Concrete Curb Type 2		LF	30
609.234	Terminal Curb Type 1 - 4 ft		EA	2
609.237	Terminal Curb Type 1 - 7 ft		EA	2
609.26	Curb Transition Section B Type 1		EA	2
609.34	Curb Type 5		LF	570
609.35	Curb Type 5 - Circular		LF	20
610.08	Plain Riprap		CY	22
610.181	Temporary Stone Check Dam		CY	38
613.319	Erosion Control Blanket		SY	2900
615.07	Loam		CY	790

Item No.	Item Description	Supplemental Description	Unit	Total Quantity
618.1301	Seeding Method Number 1, Plan Quantity		UNIT	23
618.1401	Seeding Method Number 2, Plan Quantity		UNIT	11
618.1411	Seeding Method Number 3, Plan Quantity		UNIT	31
619.1201	Mulch, Plan Quantity		UNIT	65
619.1202	Temporary Mulch		LS	1
620.58	Erosion Control Geotextile		SY	80
621.536	Kesley Dogwood		EA	2
621.541	Blue Sargent Juniper		EA	2
621.542	Rhododendron'PJM' (PJM Rhododendron) 4' - 5' HT. B&B		EA	3
621.543	Tauntoni Yew		EA	1
621.80	Establishment Period		LS	1
625.085	2 inch HDPE Pipe		LF	240
626.11	Precast Concrete Junction Box		EA	12
626.12	36" x 24" x 36" Quazite Junction Box		EA	11
626.13	48" x 36" x 48' Quazite Junction Box		EA	2
626.31	18 Inch Foundation		EA	3
626.32	24 Inch Foundation		EA	18
626.38	Ground Mounted Cabinet Foundation		EA	1
627.681	Temporary 6 Inch Painted Pavement Marking Line - Yellow or White		LF	2650
627.73	Temporary 6 Inch Pavement Marking Tape		LF	1020
627.731	Temporary 6 Inch Black Pavement Marking Tape		LF	870
627.75	White or Yellow Pavement & Curb Marking		SF	410
627.77	Removing Exising Pavement Marking		SF	90
627.812	Temporary Raised Pavement Markers		EA	100
629.05	Hand Labor, Straight Time		HR	60
631.10	Air Compressor (including operator)		HR	15
631.11	Air Tool (including operator)		HR	15
631.12	All Purpose Excavator (including operator)		HR	15
631.171	Truck - small (including operator)		HR	20
631.32	Culvert Cleaner (including operators)		HR	20
631.36	Foreman		HR	40
631.50	Jackhammer (air tool including operator)		HR	10
631.51	Bucket Truck		HR	10
631.52	Scissor Lift		HR	10
631.53	Electrician		HR	10
631.54	Electrician's Apprentice		HR	10
631.55	Plumber		HR	10
633.01	Propane Service Trench		LF	100
633.21	Propane Tank Supports		EA	12
633.31	Propane Tank Pad		SY	52
633.41	Propane Tank Relocation		LS	1
634.175	Replacement LED Fixture		EA	5
634.208	Remove and Reset Light Standard		EA	3
634.231	Conventional Light Standard with LED Fixture		EA	8
639.191	Field Office, Type B		EA	1
643.712	Lane Use Signal		EA	5
645.105	Remove and Stack Sign		EA	15
645.109	Remove and Reset Canopy Sign		EA	3
645.123	Relocation of VMS and Support Structure		LS	1
645.161	Breakaway Device Single Pole		EA	5
645.162	Breakaway Device Multi Pole		EA	1
645.251	Roadside Guide Signs, Type I		SF	94
645.271	Regulatory, Warning, Confirmation and Route Assembly Sign, Type I		SF	131
645.289	Steel H-Beam Poles		LB	1850
645.501	Remove and Reset Sign No. 1		LS	1
645.502	Remove and Reset Sign No. 2		LS	1
645.503	Remove and Reset Sign No. 3		LS	1
645.504	Remove and Reset Sign No. 4		LS	1
645.505	Remove and Reset Sign No. 5		LS	1
645.506	Remove and Reset Sign No. 6		LS	1
645.507	Remove and Reset Sign No. 7		LS	1
645.508	Remove and Reset Sign No. 8		LS	1
645.509	Remove and Reset Sign No. 9		LS	1
645.510	Remove and Reset Sign No. 10		LS	1
645.511	Remove and Reset Sign No. 11		LS	1
648.00	Remove and Reset Flagpole		LS	1
652.30	Flashing Arrow		EA	1
652.312	Type III Barricades		EA	1
652.33	Drum		EA	90
652.34	Cone		EA	25
652.35	Construction Signs		SF	350

Item No.	Item Description	Supplemental Description	Unit	Total Quantity
652.361	Maintenance of Traffic Control Devices		LS	1
652.41	Portable-Changeable Message Sign		EA	4
652.45	Truck Mounted Attenuator		CD	25
655.012	Installation of Cash Lane Controller Cabinet		EA	4
655.02	DVAS Mount Installation		EA	4
655.04	Installation of Sensor Loops		LS	1
655.05	Installation of AVI Antennas		EA	7
655.06	Installation of AVI Readers		EA	1
655.07	Traffic Control Pedestal Preparation Work		EA	3
655.08	#2/0 Wire for UPS re-wiring		LF	2000
655.10	#4 AWG Wire		LF	2400
655.101	#6 AWG Wire		LF	6000
655.11	#10 AWG Wire		LF	3200
655.12	#12 AWG Wire		LF	10500
655.13	#14 AWG Wire		LF	1000
655.14	4pr/24 (Category 5e) Cable		LF	2300
655.15	LMR 400 Cable		LF	550
655.16	Fiber Optic Cable - 6 Fiber		LF	550
655.17	IVIS Homerun Loop Cable (IMSA 50-2 #16)		LF	100
655.200	1 1/2" Schedule 40 PVC Conduit		LF	60
655.201	3" Schedule 40 PVC Conduit		LF	60
655.2021	1" Schedule 80 PVC Conduit		LF	120
655.203	1 1/2" Schedule 80 PVC Conduit		LF	280
655.2031	2" Schedule 80 PVC Conduit		LF	3850
655.204	3" Schedule 80 PVC Conduit		LF	3700
655.2051	12" Schedule 80 PVC Conduit		LF	100
655.206	1" Galvanized Rigid Metal Conduit		LF	250
655.207	1 1/2" Galvanized Rigid Metal Conduit		LF	140
655.208	3" Galvanized Rigid Metal Conduit		LF	100
655.209	1/2" Liquid Tight Metallic Flexible Conduit		LF	50
655.2101	1 1/2" Liquid Tight Metallic Flexible Conduit		LF	100
655.2102	2" Liquid Tight Metallic Flexible Conduit		LF	100
655.221	Type A Pull Box Inside		EA	6
655.222	Type C Pull Box Inside		EA	12
655.223	Type D Pull Box Outdoor		EA	3
655.224	Type E Pull Box Inside		EA	4
655.225	Type F Pull Box Outside		EA	7
655.226	Type G Pull Box Outside		EA	2
655.30	12" x 12" x 6" Galvanized Junction Box		EA	4
655.31	18" x 18" x 6" Galvanized Junction Box		EA	4
655.42	36" x 30" x 20" NEMA 4X Cabinet		EA	1
655.591	Modification of Existing Service/Distribution System		LS	1
655.63	4-inch x 4-inch Plastic NEMA 4R Wireway		LF	20
655.64	6-inch x 6-inch Plastic NEMA 4R Wireway		LF	20
655.71	Removal of Existing Select Toll Equipment		LS	1
655.80	Lightning Suppression System		LS	1
655.81	Key Switch		EA	6
655.82	Duplex Receptacle		EA	8
655.83	NEMA L5-30R Receptacle		EA	4
655.84	Quadplex Receptacle		EA	6
655.92	LED Canopy Light Fixture		EA	6
655.93	Temporary Power and Communications		LS	1
655.94	Replacement Stand-By Generator and Transfer Switch		LS	1
656.50	Baled Hay, in place		EA	50
656.60	Temporary Berms		LF	1400
656.62	Temporary Slope Drains		LF	80
656.632	30" Temporary Silt Fence		LF	510
659.10	Mobilization		LS	1
670.01	Sewage Disposal Replacement System		LS	1
800.01	Toll Administration Building		LS	1
800.10	Electrical Demolition		LS	1
800.20	Mechanical Demolition		LS	1
800.30	Toll Plaza Booths, Canopy and Gantry Demolition		LS	1
800.40	New Toll Booth Installation		LS	1
800.50	New Canopy and Gantry Installation		LS	1

COMMON EXCAVATION FOR ESTIMATE

COMMON EXCAVATION (FROM CROSS SECTIONS)	6,440		
FULL DEPTH PAVEMENT REMOVAL (PLAN AREA)	690		
GRUBBING IN FILL	175		
TOTAL COMMON EXCAVATION			7,305
ITEM 203.20		SAY	7,300

FILL FOR BORROW CALCULATIONS

COMMON FILL (FROM CROSS SECTIONS)	370	
GRUBBING IN FILL	175	
TOTAL FILL		545

AVAILABLE COMMON EXCAVATION FOR BORROW CALCULATIONS

(1) TOTAL COMMON EXCAVATION		7,305
DEDUCTIONS:		
GRUBBING IN CUT	1,200	
GRUBBING IN FILL	175	
PAVEMENT REMOVAL	960	
(2) TOTAL DEDUCTIONS		2,335
TOTAL AVAILABLE COMMON EXCAVATION (1) MINUS (2)		4,970
TOTAL AVAILABLE NON-ROCK EXCAVATION		4,970

COMPUTATION FOR COMMON BORROW FOR ESTIMATE

(3)TOTAL FILL			545
TOTAL AVAIL. NON-ROCK EXCAV.	4,970 x 0.85 =	4,225	
(4)TOTAL AVAILABLE EXCAVATION		=	4,225
(4) - (3) SURPLUS MATERIAL =			3,680

Date:8/26/2015

Filename: 002_Est Qtys & EWSummary.dgn

Scale:

No.	Revision	By	Date

Designed by:

HNTB

CONSULTANT PROJECT MANAGER: R. Bruce Munger, P.E.

	By	Date		By	Date
Designed	CDH	08/15	Checked	RBM	08/15
Drawn	CDH	08/15	In Charge of	RAL	08/15

HNTB CORPORATION
340 County Road, Suite 6-C
Westbrook, ME 04092
TEL (207) 774-5155
FAX (207) 228-0909

MAINE TURNPIKE

THE GOLD STAR MEMORIAL HIGHWAY

MTA PROJECT MANAGER: William Yates

INTERCHANGE 53
TOLL PLAZA REPLACEMENT

ESTIMATED QUANTITIES
& EARTHWORK SUMMARY

SHEET NUMBER: EQ-01

CONTRACT:2015.09

GENERAL

1. ALL DETAILS SHALL BE IN CONFORMANCE WITH MAINE DEPARTMENT OF TRANSPORTATION (MaineDOT) STANDARD DETAILS HIGHWAYS AND BRIDGES 2002 WITH UPDATES AND MaineDOT BEST MANAGEMENT PRACTICES FOR EROSION AND SEDIMENT CONTROL LATEST REVISION UNLESS OTHERWISE INCLUDED IN THESE PLANS.

2. CONTRACTOR IS REQUIRED TO MAINTAIN ACCESS TO ALL DRIVEWAYS AND SIDE ROADS DURING CONSTRUCTION UNLESS OTHERWISE SHOWN ON THE PLANS.

3. THE CONTRACTOR SHALL SUBMIT THE PROPOSED STAGING AREA(S) AND FIELD TRAILER LOCATION TO THE RESIDENT FOR APPROVAL PRIOR TO STARTING WORK.

4. CONTRACTOR IS REQUIRED TO MAINTAIN SAFE ACCESS TO PARKING AREAS FOR MTA EMPLOYEES AT ALL TIMES DURING CONSTRUCTION.

5. A COPY OF THE "GEOTECHNICAL REPORT" DATED APRIL, 2015 IS AVAILABLE FOR DOWNLOAD AT MAINETURNPIKE.COM.

6. DUST CONTROL IS INCIDENTAL TO CONTRACT.

7. WASTE MATERIALS SHALL BE DISPOSED OF OFF THE PROJECT SITE, IN ACCORDANCE WITH CHAPTER 404, DEPARTMENT OF ENVIRONMENTAL PROTECTION SOLID WASTE MANAGEMENT RULES.

8. SURFACE PAVEMENT FOR ALL LANES, AND APPROACHES WILL BE COMPLETED AT THE END OF PROJECT TO LIMIT PAVEMENT JOINTS.

9. FOR LONG TERM CLOSURES LASTING MORE THAN 6 HOURS, ONLY ONE ENTRY OR EXIT LANE AT EACH PLAZA MAY BE CLOSED AT A TIME UNLESS OTHERWISE APPROVED BY THE MTA OR AS DIRECTED BY THIS CONTRACT'S PLANS AND SPECIFICATIONS. ALL TOLL EQUIPMENT MUST BE OPERATIONAL PRIOR TO REOPENING A LANE TO TRAFFIC.

10. ONCE WORK IN A LANE HAS STARTED, WORK IN THAT LANE SHALL CONTINUE UNINTERRUPTED UNTIL ALL WORK IN THAT LANE IS COMPLETE.

11. PRIOR TO THE START OF WORK IN A LANE THE CONTRACTOR SHALL COVER CANOPY SIGNS OVER THE LANE AND ALL REMAINING OPEN LANES SHALL HAVE THE APPROPRIATE CANOPY SIGN ACTIVATED AND/OR REMOVED AND RESET BY THE CONTRACTOR. THE CONTRACTOR MAY USE GROUND MOUNTED SIGNS PROVIDED BY THE MTA TO INDICATE OPEN LANES. ALL CANOPY SIGN WORK SHALL BE INCIDENTAL TO ITEM 202.12 - REMOVING EXISTING STRUCTURAL CONCRETE.

12. THE BITUMINOUS PAVEMENT DEPTH HAS BEEN ASSUMED TO BE 6", BUT MAY VARY. FULL DEPTH REMOVAL OF BITUMINOUS PAVEMENT WILL BE PAID UNDER ITEM 203.20 - COMMON EXCAVATION.

13. FINAL PAVEMENT MARKINGS SHALL BE INSTALLED BY THE AUTHORITY.

14. EXCAVATED GRAVEL SHALL NOT BE STOCKPILED ON SITE.

15. NO SMOKING WITHIN 25' OF TOLL BUILDINGS OR MANNED TOLL BOOTHS.

16. TOLL BOOTHS SHALL BE SUPPLIED BY THE MAINE TURNPIKE AUTHORITY. THE CONTRACTOR SHALL BE RESPONSIBLE FOR TRANSPORT OF THE BOOTHS FROM THE CUMBERLAND MAINTENANCE FACILITY TO THE PROJECT SITE AND INSTALLATION. ALL WORK ASSOCIATED WITH THIS ITEM IS INCIDENTAL TO ITEM 800.401.

17. ALL EXISTING DELINEATOR POSTS SHALL BE REMOVED AND RESET UPON COMPLETION OF THE CONTRACT. PAYMENT FOR RESETTING DELINEATOR POSTS SHALL BE MADE UNDER ITEM 606.354. NEW DELINEATOR POSTS SUPPLIED BY THE CONTRACTOR SHALL BE PAID FOR UNDER ITEM 606.353.

18. THE LIGHT FIXTURES ON STANDARDS LABELED #2, 23.1, 23.2, 23.3 AND 23.4 SHALL BE REPLACED WITH LED FIXTURES.

UTILITY

1. EXISTING UTILITIES ON THESE PLANS WERE COMPILED FROM FIELD SURVEY AND VARIOUS OTHER SOURCES. LOCATIONS ARE NOT GUARANTEED TO BE ACCURATE NOR IS IT GUARANTEED THAT ALL UTILITIES ARE SHOWN. NO SEPARATE OR ADDITIONAL COMPENSATION WILL BE ALLOWED TO THE CONTRACTOR DUE TO ANY VARIANCE BETWEEN THE DATA SHOWN ON THE PLANS AND THE ACTUAL FIELD CONDITIONS ENCOUNTERED. NO WORK SHALL BE STARTED UNTIL THE OWNERS OF THE VARIOUS UTILITIES ARE NOTIFIED BY THE CONTRACTOR OF THE PROPOSED CONSTRUCTION. THE CONTRACTOR IS ALSO REQUIRED TO CALL DIG SAFE AT 1-888-344-7233 PRIOR TO THE START OF THE WORK.

2. THE UTILITIES INVOLVED IN THIS CONTRACT ARE:

A. MAINE TURNPIKE AUTHORITY
B. PORTLAND WATER DISTRICT
C. CENTRAL MAINE POWER COMPANY
D. TIME WARNER CABLE
E. FAIRPOINT COMMUNICATIONS

THE AUTHORITY IS RESPONSIBLE FOR MARKING MTA UTILITIES PRIOR TO CONSTRUCTION. THE MTA MAY USE DIG SMART OF MAINE FOR UTILITY LOCATION. THE CONTRACTOR SHALL COORDINATE WITH THE RESIDENT IN ORDER TO CONTACT DIG SMART OR MTA PERSONNEL.

3. THE CONTRACTOR SHALL NOTIFY THE RESIDENT 10 DAYS PRIOR TO CONSTRUCTION SO THE RESIDENT CAN ARRANGE FOR MAINE TURNPIKE UNDERGROUND UTILITY LOCATION. ALL PROPOSED SIGN LOCATIONS AND EXCAVATION LOCATIONS SHALL BE MARKED AT THE NOTIFICATION TIME. EXCAVATION WILL NOT BE PERMITTED UNTIL THE AUTHORITY HAS LOCATED AND MARKED ITS' UNDERGROUND UTILITIES, OR NOTIFIED THE RESIDENT THERE ARE NO UNDERGROUND UTILITIES IN THE MARKED AREAS.

THE AUTHORITY HAS PROGRAMMED TWO FIELD VISITS FOR MAINE TURNPIKE UTILITY COORDINATION ON THIS PROJECT. SHOULD THE CONTRACTOR NEED ADDITIONAL SIGN LOCATIONS AND/OR ADDITIONAL EXCAVATION LOCATIONS MARKED, OR SHOULD THE CONTRACTOR FAIL TO MAINTAIN THE AUTHORITY'S PREVIOUSLY ESTABLISHED DIG SAFE MARKS, THE AUTHORITY SHALL DEDUCT THE ADDED MARKING COSTS FROM THE CONTRACTOR'S PAYMENTS.

4. UTILITY WORK INCLUDES TEMPORARY AND PERMANENT POWER AND COMMUNICATIONS RELOCATIONS; RELOCATION OF EXISTING HIGHWAY LIGHTING; RELOCATION OF EXISTING WATER SERVICE; AND INSTALLATION OF NEW SEPTIC SYSTEM.

EROSION CONTROL

1. THE ANTICIPATED EROSION CONTROL DEVICES ARE SHOWN ON THE PLANS. THE CONTRACTOR SHALL PROPOSE ACTUAL TYPE AND LOCATION OF DEVICES FOR APPROVAL BY THE RESIDENT. ADDITIONAL MEASURES MAY BE PROPOSED BY THE CONTRACTOR DUE TO SITE OR WEATHER CONDITIONS. THE RESIDENT MAY DIRECT THE CONTRACTOR TO IMPLEMENT ADDITIONAL MEASURES. ANY ADDITIONAL MEASURES APPROVED BY THE RESIDENT WILL BE MEASURED FOR PAYMENT.

2. 4" LOAM HAS BEEN ESTIMATED FOR 100% OF THE DISTURBED SLOPE AREA UNLESS OTHERWISE SPECIFIED ON THE PLANS. ACTUAL PLACEMENT OF THE LOAM SHALL BE AS DESIGNATED BY THE RESIDENT.

3. NEWLY DISTURBED EARTH SHALL BE MULCHED BY THE END OF EACH WORK DAY. MULCH SHALL BE MAINTAINED ON A DAILY BASIS. THIS WORK SHALL BE PAID FOR UNDER ITEM 619.1202 TEMPORARY MULCH.

4. ALL TEMPORARY AND PERMANENT EROSION CONTROL DEVICES SHALL BE INSTALLED IN ACCORDANCE WITH THE MAINE DEPARTMENT OF TRANSPORTATION BEST MANAGEMENT PRACTICES.

5. TEMPORARY SEED SHALL BE APPLIED TO ALL DISTURBED AREAS THAT WILL NOT BE COMPLETED WITHIN 30 DAYS.

6. TEMPORARY EROSION CONTROL BLANKET, ITEM 613.319 SHALL BE INSTALLED IN ALL DITCHES AND 2:1 SLOPES FROM TOP TO TOE OF SLOPE. LOAM AND SEED SHALL BE PLACED PRIOR TO THE INSTALLATION OF THE EROSION CONTROL BLANKET. LIMITS OF THE EROSION CONTROL BLANKET IN DITCHES SHALL BE 6' WIDE OR AS DESIGNATED BY THE RESIDENT. SEEDING METHOD NO. 3 SHALL BE USED BEHIND GUARDRAIL AND SEEDING METHOD NO. 1 SHALL BE USED AT AND AROUND THE PLAZA BUILDING. ALL OTHER AREAS SHALL BE SEEDED WITH METHOD NO. 2.

EARTHWORK

1. CLEARING LIMITS ARE AS SHOWN ON THE PLANS UNLESS OTHERWISE AUTHORIZED BY THE RESIDENT. THE ACTUAL CLEARING LINES SHALL BE ESTABLISHED BY THE CONTRACTOR AND APPROVED BY THE RESIDENT PRIOR TO ANY CLEARING TAKING PLACE. CLEARING SHALL BE INCIDENTAL TO THE CONTRACT.

2. EXCAVATIONS ACCOMPLISHED AS PART OF THIS PROJECT SHALL BE CONSTRUCTED IN ACCORDANCE WITH OSHA SUBPART P OF 29 CFR PART 1926.650-652 (CONSTRUCTION STANDARDS FOR EXCAVATION).

3. THE CONTRACTOR SHALL REMOVE EXISTING MACADAM WHEN ENCOUNTERED AND SHALL BE PAID FOR AS COMMON EXCAVATION ITEM 203.20.

DRAINAGE

1. NO EXISTING DRAINAGE SHALL BE ABANDONED, REMOVED OR PLUGGED WITHOUT PRIOR APPROVAL OF THE RESIDENT.

2. INLETS AND OUTLETS OF ALL CULVERTS SHALL BE RIPRAPPED UNLESS OTHERWISE NOTED ON THE PLANS OR DIRECTED BY THE RESIDENT.

3. ALL DITCH ELEVATIONS AND OFFSETS SHOWN ON THE CROSS SECTIONS ARE FOR THE FINISHED DITCH FLOW LINE.

4. ANY NECESSARY CUTTING OF EXISTING PIPES TO FIT IN AREAS OF PROPOSED CATCH BASINS AND MANHOLES WILL NOT BE PAID FOR SEPARATELY, BUT SHALL BE INCIDENTAL TO THE PROPOSED CATCH BASIN AND MANHOLE ITEMS.

5. ANY NECESSARY CUTTING OF EXISTING CATCH BASINS TO TAKE A PROPOSED PIPE WILL NOT BE PAID FOR SEPARATELY AND SHALL BE INCIDENTAL TO THE PROPOSED CULVERT ITEMS.

6. EXISTING CULVERTS TO REMAIN SHALL BE CLEANED AS DIRECTED BY THE ENGINEER. PAYMENT WILL BE MADE UNDER ITEM 631.32 CULVERT CLEANER (INCLUDING OPERATORS).

7. ALL NEW CATCH BASIN GRATES SHALL BE AS MANUFACTURED BY EJ COMPANY OF BROCKTON, MA.

8. ONE RED DELINEATOR POST SHALL BE INSTALLED AT ALL UNDERDRAIN AND STORM DRAIN OUTLETS.

9. ALL CONNECTIONS AND FITTINGS NECESSARY TO CONNECT THE PIT AND CANOPY DRAINS TO THE 12 INCH PVC DRAIN LINE SHALL BE INCIDENTAL TO ITEM 603.159.

MAINTENANCE OF TRAFFIC

1. CANOPY LIGHT ABOVE CLOSED LANES SHALL BE RED.

2. CANOPY SIGNAGE ABOVE CLOSED LANES SHALL BE COVERED.

3. CONTRACTOR SHALL MAINTAIN A 5' WIDE PATHWAY FOR MTA EMPLOYEES TO ACCESS PLAZA BUILDING AND TOLL BOOTHS TO CROSS WORK ZONES SAFELY DURING ALL PHASES OF WORK. THIS MAY REQUIRE BREAKS IN BARRIER, USE OF BARRELS, SAFETY TAPE DELINEATING PATHS AND TEMPORARY SIGNAGE. THE PATH SHALL BE LIGHTED FROM DUSK TO DAWN AND FREE FROM TRIP HAZARDS. LIGHTING, SIGNAGE AND SAFETY TAPE SHALL BE INCIDENTAL TO ITEM 659.10 MOBILIZATION.

4. REFER TO APPENDIX C OF SPECIFICATIONS FOR PLAZA SAFETY REQUIREMENTS.

GUARDRAIL

1. CONTRACTOR SHALL STOCKPILE ALL GUARDRAIL TO BE REMOVED AND RESET, REMOVED AND STACKED AND REMOVED, MODIFIED AND RESET UNTIL GUARDRAIL INSTALLATION HAS BEEN COMPLETE. STOCKPILING THE GUARDRAIL SHALL BE INCIDENTAL TO ITEM 606.3631 GUARDRAIL - REMOVE AND DISPOSE. ALL USABLE EXISTING GUARDRAIL SHALL BE MODIFIED AND RESET PRIOR TO BEING PAID TO INSTALL NEW GUARDRAIL. ANY USABLE GUARDRAIL REMAINING AFTER ALL GUARDRAIL HAS BEEN INSTALLED SHALL BE DELIVERED TO CROSBY MAINTENANCE AT MILE MARKER 45.8, SB.

2. FOR ALL NEW GUARDRAIL TYPES 3d W-BEAM AND THRIE-BEAM SINGLE
AND DOUBLE RAIL - OFFSET BLOCKS SHALL BE NON-WOOD CONFORMING TO NCHRP 350 TEST LEVEL 3.

3. ALL PROPOSED GUARDRAIL AND RESET GUARDRAIL SHALL BE INSTALLED IN A MANNER TO AVOID ELECTRICAL AND DRAINAGE STRUCTURES.

4. DAMAGE TO EXISTING PAVEMENT OR NEW PAVEMENT DUE TO THE INSTALLATION OF NEW OR RESET GUARDRAIL SHALL BE REPAIRED AND PAYMENT SHALL BE INCIDENTAL TO THE GUARDRAIL ITEMS.

5. EXISTING TUBULAR MARKERS SEPARATING OPPOSING TRAFFIC IN THE TOLL PLAZA SHALL BE REMOVED DURING PHASE 1 TRAFFIC CONTROL AND STACKED AT CROSBY MAINTENANCE AT MILE MARKER 45.8 SB.

6. AT THE END OF THE WORK DAY, EVERYDAY, THE CONTRACTOR IS REQUIRED TO HAVE AN APPROVED CRASHWORTHY END TREATMENT ON ALL GUARDRAIL AND BARRIER WITHIN ALL WORK AREAS THAT ARE ACCESSIBLE TO TRAFFIC.

7. CONNECTIONS FOR PROPOSED GUARDRAIL TO EXISTING GUARDRAIL SHALL BE INCIDENTAL TO THE PROPOSED GUARDRAIL ITEMS.

8. TWO GUARDRAIL DELINEATOR POSTS SHALL BE INSTALLED AT EACH FLEAT.

9. ALL NEW AND RESET GUARDRAIL TYPE 3d SHALL BE INSTALLED AT 30 INCHES HIGH EXCEPT WHERE TRANSITIONING TO EXISTING RAIL.

10. PAYMENT FOR THE REMOVAL OF EXISTING GUARDRAIL END TREATMENTS SHALL BE MADE UNDER ITEM 606.3631 - GUARDRAIL - REMOVE, STACK, AND DISPOSE UNLESS NOTED OTHERWISE ON THE PLANS.

TOLLING

1. THE CONTRACTOR SHALL REMOVE AND DISPOSE OF THE FOLLOWING ITEMS:

   A. TREADLE FRAMES
   B. LANE CONTROLLER ENCLOSURE

2. THE CONTRACTOR SHALL SALVAGE THE FOLLOWING ITEMS AND DELIVER TO THE MAINE TURNPIKE SIGN SHOP AT MILE MARKER 58.3:

   A. OVERHEAD CANOPY (RED/GREEN) LIGHTS AND HOUSINGS.

3. THE CONTRACTOR SHALL SALVAGE THE FOLLOWING ITEMS AND DELIVER TO TRANSCORE'S WAREHOUSE AT TRANSCORE INC., 190 RIVERSIDE ST UNIT 3B, PORTLAND, ME. :

   A. OVERHEAD SCANNERS

4. TRANSCORE SHALL PROVIDE THE FOLLOWING ITEMS TO BE INSTALLED BY THE CONTRACTOR:

   A. PELCO MOUNTING HOOK FOR THE DVAS CAMERA
   B. IVIS LOOP SENSORS, TEMPLATES FOR LOOP LAYOUT, AND ANY LAYOUT FOR CUTTING CONCRETE. THE CONTRACTOR SHALL SUPPLY THE EQUIPMENT AND LABOR FOR CUTTING CONCRETE FOR INSTALLATION OF THE LOOPS.
   C. TRAFFIC CONTROL PEDESTAL
   D. NEW CANOPY OVERRIDE SWITCH

5. THE CONTRACTOR SHALL PROVIDE AND INSTALL THE FOLLOWING ITEMS:

   A. ALL REQUIRED JUNCTION BOXES/PULL BOXES (INCLUDING ALL MOUNTING SUPPORTS), CONDUIT, FITTINGS, AND ASSOCIATED COMMUNICATION AND ELECTRICAL WIRING.
   B. LANE USE SIGNAL (RED X AND GREEN ↓) TO REPLACE CURRENT CANOPY SIGNAL LIGHTS.

6. ITEMS ASSOCIATED WITH CASH/ETC LANES TO REMAIN ARE:

   A. RECEIPT PRINTER (BOOTH)
   B. AVI ANTENNA (CANOPY)
   C. CANOPY OVERRIDE SWITCH (BOOTH)
   D. AVI READER (BOOTH)
   E. POWER AND DATA CABLING THAT CAN BE REUSED (CONDUIT, BOOTH, LANE)

7. TRANSCORE SHALL PROVIDE, INSTALL, AND TERMINATE DATA TO THE FOLLOWING ITEMS:

   A. DVAS CAMERA AND COSTAR ENCLOSURE
   B. NEW LANE AND ASSOCIATED CONTROLLERS AND NETWORK SWITCH
   C. TRAFFIC CONTROL PEDESTAL (PROVIDE AND TERMINATE ONLY)
   D. LANE CONTROLLER ENCLOSURE AND METAL CLEATS (PROVIDE AND TERMINATE ONLY)
   E. MANUAL LANE TERMINAL
   F. ENVIRONMENTALLY CONTROLLED ENCLOSURES FOR EXTERIOR MOUNTED LANE CONTROLLERS.

8. TRANSCORE SHALL REMOVE AND SALVAGE THE FOLLOWING ITEMS:

   A. VIOLATION ENFORCEMENT SYSTEM (VES CAMERAS, LIGHTS AND MOUNTING HARDWARE AND PEDESTAL)
   B. MANUAL LANE TERMINAL
   C. LIGHT CURTAINS, HEIGHT DETECTORS AND ENCLOSURES
   D. VIOLATION ENFORCEMENT SYSTEM CONTROLLER AND CABINET
   E. PATRON FARE DISPLAY
   F. EXISTING LANE CONTROLLER
   G. ISLAND TRAFFIC LIGHTS AND MOUNTING POLES
   H. TREADLE INSERTS

9. AT EACH PLAZA, ONE DVAS CAMERA PELCO MOUNTING HOOK SHALL BE INSTALLED SERVING EACH INDIVIDUAL ENTRY LANE, AND ONE SHALL BE INSTALLED SERVING ALL EXITING LANES.

10. PELCO MOUNT HOOKS FOR EACH ENTRY LANE SHALL BE INSTALLED ON GALVANIZED ANGLE STUBS ATTACHED TO CANOPY STRUCTURAL STEEL. THE MOUNTING HOOKS SHALL BE SECURED TO A 3" GALVANIZED RIGID PIPE SECURED TO THE ANGLE STUBS VIA GALVANIZED "U" BOLTS. THE FINAL LOCATION OF THE MOUNTING HOOKS SHALL BE REVIEWED AND APPROVED BY TRANSCORE AND THE MAINE TURNPIKE AUTHORITY PRIOR TO INSTALLATION.

11. THE CONTRACTOR WILL COORDINATE WITH THE MAINE TURNPIKE RESIDENT PRIOR TO STARTING WORK ON THE WIDE LOAD LANE. THE MAINE TURNPIKE AUTHORITY REQUIRES A 14 DAY NOTICE PRIOR TO CLOSURE OF A WIDE LOAD LANE.

12. THE PELCO MOUNTING HOOKS FOR EXITING LANES WILL BE MOUNTED TO SUPPORT COLUMN OF THE PROPOSED EXIT LANE GANTRY.

13. THE CASH LANE IVIS LOOPS WILL HAVE A 1/4" DEEP EPOXY OVERLAY, 8" WIDE, AS DETAILED ON PLAN SHEETS. SEE ITEM 515.23.

TOLL SYSTEM INTEGRATOR

1. THE CONTRACTOR'S SCHEDULE OF WORK SHALL ACCOUNT FOR THE INSTALLATION OF THE NEW TOLLING EQUIPMENT IN EACH LANE (10 WORKING DAYS PER LANE). ALL CIVIL WORK IN A LANE SHALL BE COMPLETED BY THE CONTRACTOR PRIOR TO THE INSTALLATION OF THE NEW TOLLING EQUIPMENT IN THE RESPECTIVE LANE. NEW TOLLING EQUIPMENT IS TO BE INSTALLED, TERMINATED, AND TESTED BY THE TOLL SYSTEM INTEGRATOR.

2. A LANE SHALL NOT BE OPENED TO TRAFFIC UNTIL ALL NEW TOLLING EQUIPMENT HAS BEEN INSTALLED IN THE RESPECTIVE LANE, HAS BEEN TESTED, AND COMMISIONING HAS BEEN ACCEPTED BY THE MTA.

3. THE TOLL SYSTEM INTEGRATOR WILL HAVE 10 BUSINESS DAYS. THE CONTRACTOR WILL NEED TO ACCOUNT FOR THE TOLL SYSTEM INTEGRATOR WITHIN THEIR SCHEDULE OF WORK.

ELECTRICAL

1. LOOP GRADIENT SENSOR CONDUIT STUB-UPS WILL BE CONNECTED TO A HOME RUN CONDUIT VIA A 3" SANITARY TEE OR 90 PVC DWV.

2. ALL CONDUIT LOCATED IN THE TOLL LANES SHALL BE INSTALLED IN THE ROADWAY SUBBASE, BELOW THE CONCRETE SLAB. THE ONLY CONDUIT LOCATED WITHIN THE CONCRETE SLAB IS FOR STUB-UPS.

3. "KEY SWITCHES" WILL BE INSTALLED FOR THE INLINE CLEAN POWER OF EACH DVAS AND VES. CLEAN POWER SWITCHES SHALL BE INSTALLED IN ALL LANES. POWER AND DATA CABLES FROM THE LANE CONTROLLERS TO THE DVAS SHALL BE ROUTED UP THROUGH CANOPY SUPPORT COLUMNS AND RUN IN CONDUIT ATTATCHED TO THE UNDERSIDE OF THE CANOPY ROOF.

4. ALL EXISTING CONDUIT RUNS SHALL BE REUSED WHEN POSSIBLE. EXISTING CONDUIT RUNS SHALL NOT BE ABANDONED UNLESS REVIEWED AND APPROVED OR AS DIRECTED BY TRANSCORE AND THE MAINE TURNPIKE AUTHORITY.

5. THE CONTRACTOR WILL RELOCATE AND MAINTAIN THE OUTBOARD LIGHT BARS AT LANE 1 IN ORDER TO CONSTRUCT THE NEW LANE AT THE TOLL PLAZA.

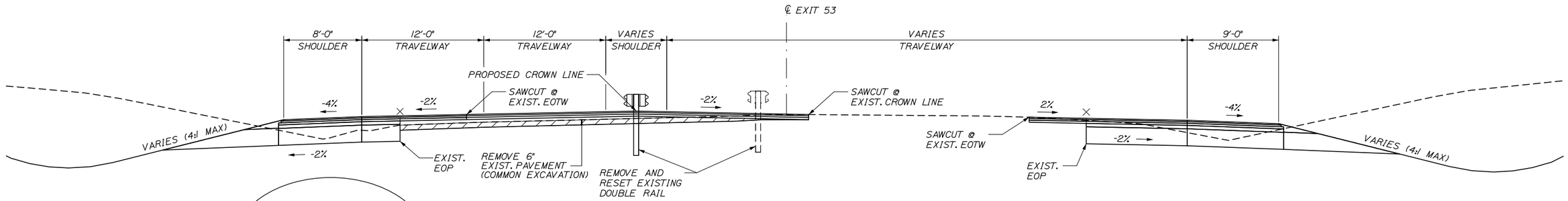

EXIT WIDENING WITH CROWN SHIFT

(STA. 8+58 TO STA. 13+00)
1" = 5'

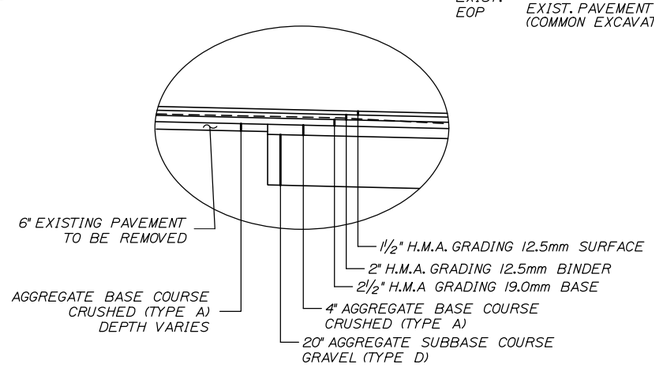

DETAIL AA

N.T.S.

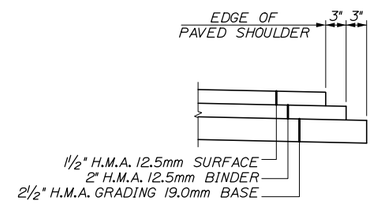

DETAIL BB

N.T.S.

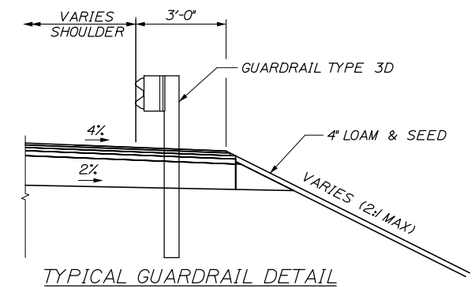

TYPICAL GUARDRAIL DETAIL

(STA. 4+99.99 RT TO STA. 6+53.59 RT)
(STA. 7+48.45 RT TO STA. 7+73.45 RT)
(STA. 8+18.51 LT TO STA. 8+43.51 LT)
(STA. 11+14.82 RT TO STA. 15+32.85 RT)
N.T.S.

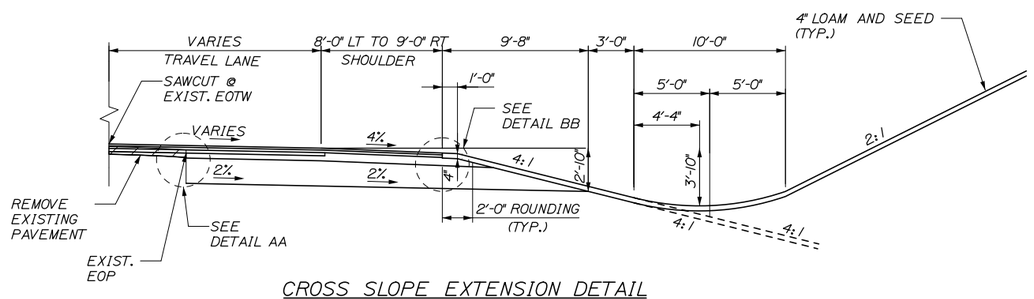

CROSS SLOPE EXTENSION DETAIL

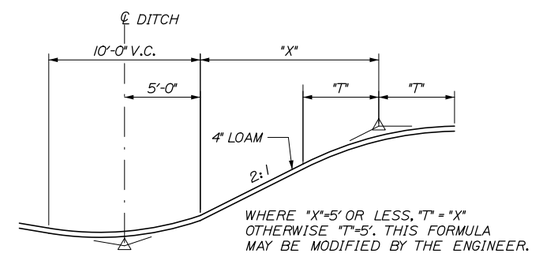

BACKSLOPE ROUNDING DETAIL

N.T.S.

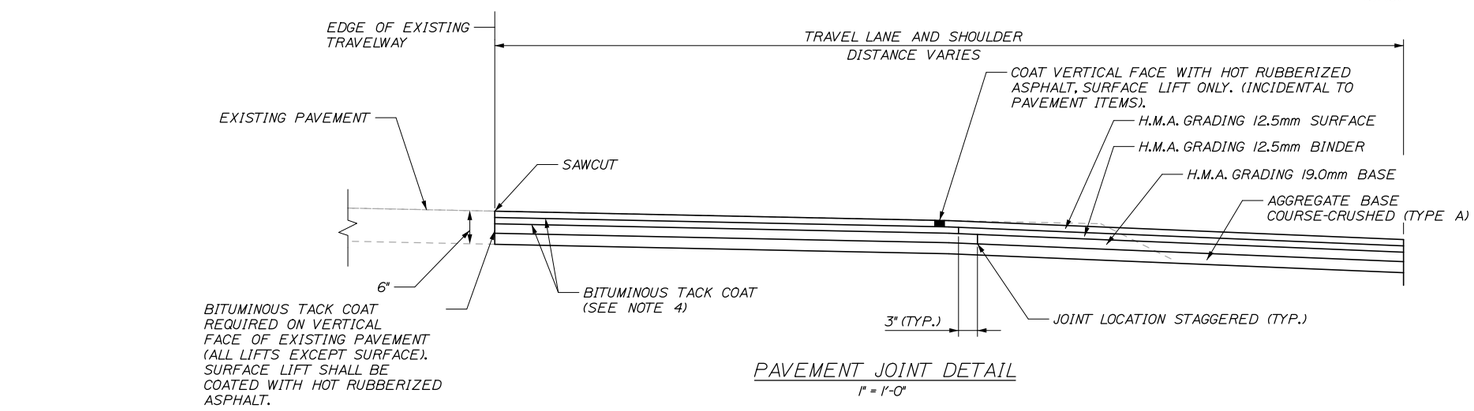

PAVEMENT JOINT DETAIL

1" = 1'-0"

GENERAL NOTES

1. THE PAVEMENT, BASE AND SUBBASE DEPTHS AS SHOWN ON THE PLANS ARE INTENDED TO BE NOMINAL.

2. CROWNS FOR ALL COURSES OF SUBBASE AND PAVEMENT SHALL BE STRAIGHT.

3. ALL NECESSARY PAVEMENT CUTTING SHALL BE SAWCUT AND DONE IN SUCH A MANNER AS TO LEAVE A CLEAN, VERTICAL FACE.

4. BITUMINOUS TACK COAT IS REQUIRED BETWEEN ALL LIFTS OF PAVEMENT, OR AS DIRECTED BY RESIDENT. BITUMINOUS TACK COAT IS REQUIRED ON ALL EXISTING PAVED OR MILLED SURFACES PRIOR TO PLACING PROPOSED PAVEMENT.

5. A COATING OF HOT RUBBERIZED ASPHALT SHALL BE APPLIED TO SURFACE LAYER OF ALL SAWCUT AND PAVEMENT JOINTS PRIOR TO PAVING. REMAINDER OF SAWCUT TO BE BITUMINOUS TACK COAT. PAYMENT SHALL BE INCIDENTAL TO THE PAVEMENT ITEMS.

6. THE CONTRACTOR WILL NOT BE PERMITTED TO GRIND OUT OR PLACE TEMPORARY PAINTED PAVEMENT MARKINGS ON FINAL SURFACE LIFT OF PAVEMENT. THE SURFACE LIFT SHALL BE PLACED AS THE FINAL CONSTRUCTION PHASE.

Date:8/17/2015

Filename: 005_Exit53-TypicalSections01.dgn

Scale: AS NOTED			
No.	Revision	By	Date

Designed by: HNTB

CONSULTANT PROJECT MANAGER: R. Bruce Munger, P.E.

	By	Date		By	Date
Designed	TJW	08/15	Checked	CDH	08/15
Drawn	TJW	08/15	In Charge of	RAL	08/15

HNTB CORPORATION
340 County Road, Suite 6-C
Westbrook, ME 04092
TEL (207) 774-5155
FAX (207) 228-0909

MAINE TURNPIKE

THE GOLD STAR MEMORIAL HIGHWAY

MTA PROJECT MANAGER: William Yates

INTERCHANGE 53
TOLL PLAZA REPLACEMENT

TYPICAL SECTIONS 1

SHEET NUMBER: TS-01

CONTRACT:2015.09

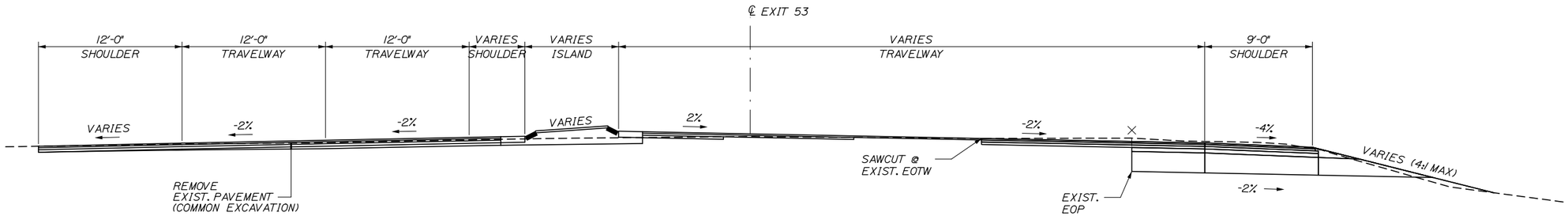

EXIT WIDENING WITH CROSS SLOPE CORRECTION

(STA. 6+00 TO STA. 7+89.50)
1" = 5'

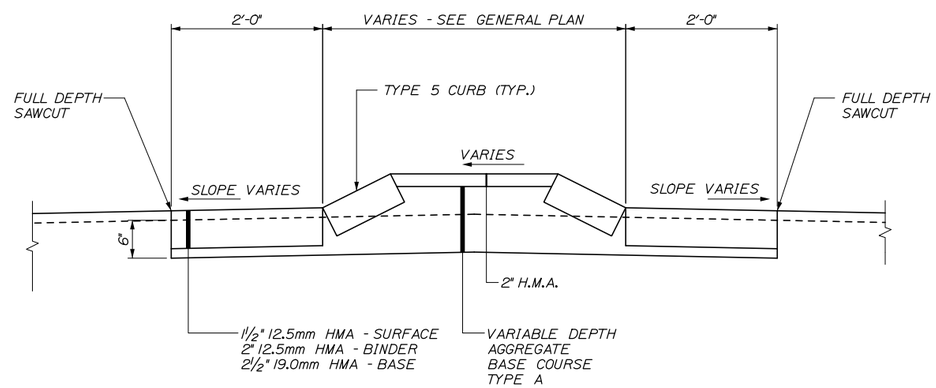

RAISED ISLAND DETAIL

(STA. 4+65 TO STA. 7+72)

Date:8/17/2015

Filename: 006_Exit53-TypicalSections02.dgn

Scale: AS NOTED			
No.	Revision	By	Date

Designed by: HNTB

CONSULTANT PROJECT MANAGER: R. Bruce Munger, P.E.

	By	Date		By	Date
Designed	TJW	08/15	Checked	CDH	08/15
Drawn	TJW	08/15	In Charge of	RAL	08/15

HNTB CORPORATION
340 County Road, Suite 6-C
Westbrook, ME 04092
TEL (207) 774-5155
FAX (207) 228-0909

MAINE TURNPIKE

THE GOLD STAR MEMORIAL HIGHWAY

MTA PROJECT MANAGER: William Yates

INTERCHANGE 53
TOLL PLAZA REPLACEMENT

TYPICAL SECTIONS 2

SHEET NUMBER: TS-02

CONTRACT:2015.09

NOTES:

1. ALL SIGNS DESIGNATED WITH A *, SHALL BE POST MOUNTED IN PHASE 1A AND SHALL REMAIN IN PLACE FOR THE REMAINDER OF THE PROJECT. ALL POST MOUNTED SIGNS NOT IN USE SHALL BE COVERED OR REMOVED AS DIRECTED BY THE RESIDENT.

2. AERIALS ARE OUT OF DATE. A SECOND EXIT LANE HAS SINCE BEEN ADDED.

3. TEMPORARY PAVEMENT MARKINGS SHALL BE PAINT EAST OF STA 12+50 AND TAPE WEST OF STA 12+50.

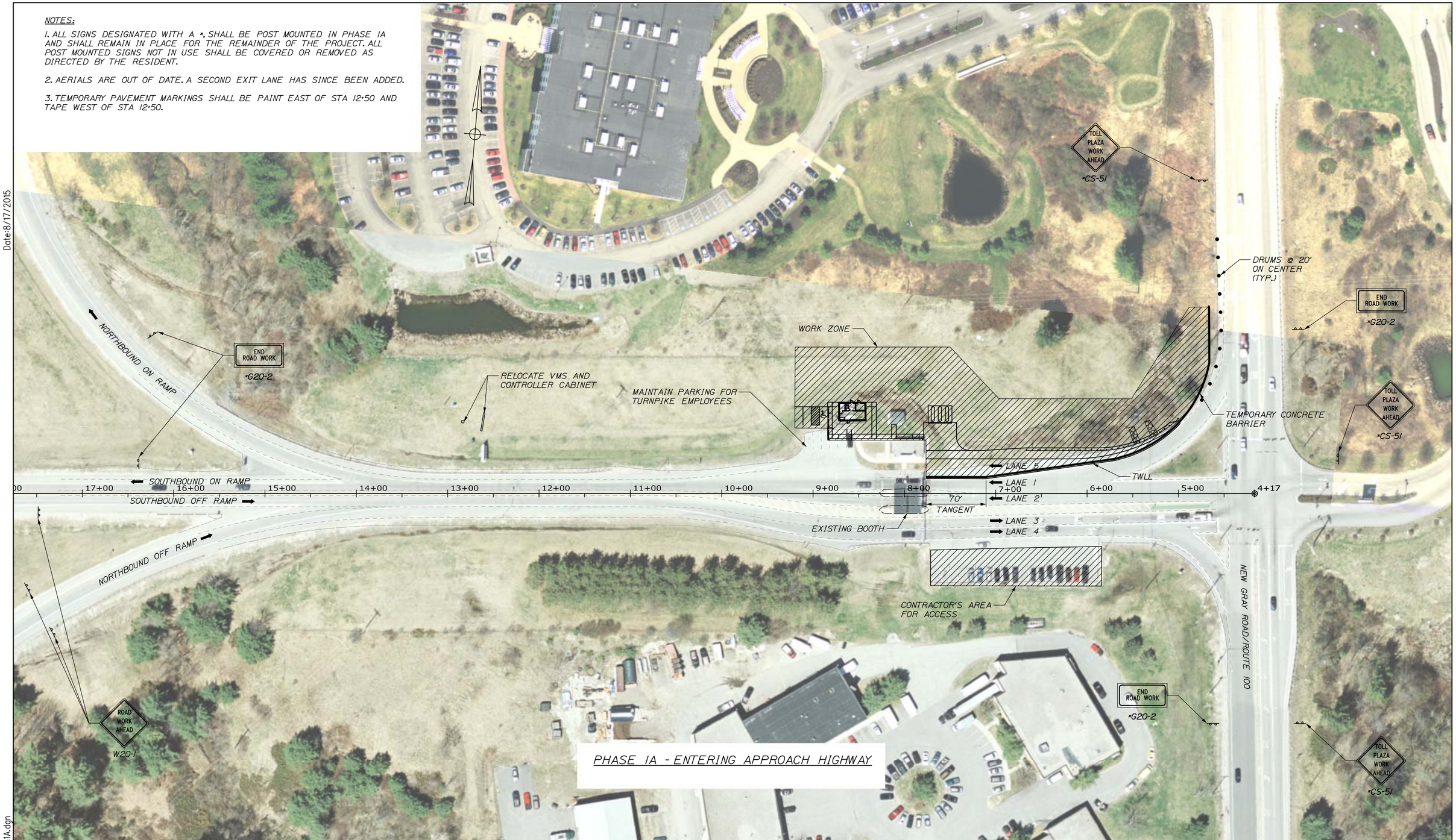

Date:8/17/2015

Filename: 007_Exit53_MOT_Ph1A.dgn

Scale: 50 0 50 100

No.	Revision	By	Date

Designed by: HNTB

CONSULTANT PROJECT MANAGER: R. Bruce Munger, P.E.

	By	Date		By	Date
Designed	JRD	08/15	Checked	TMH	08/15
Drawn	PMK	08/15	In Charge of	RAL	08/15

HNTB CORPORATION
340 County Road, Suite 6-C
Westbrook, ME 04092
TEL (207) 774-5155
FAX (207) 228-0909

MAINE TURNPIKE

THE GOLD STAR MEMORIAL HIGHWAY

MTA PROJECT MANAGER: William Yates

INTERCHANGE 53
TOLL PLAZA REPLACEMENT
MAINTENANCE OF TRAFFIC PLAN
PHASE 1A

SHEET NUMBER: MT-01

CONTRACT:2015.09

NOTES:

1. AERIALS ARE OUT OF DATE. A SECOND EXIT LANE HAS SINCE BEEN ADDED.

2. TEMPORARY PAVEMENT MARKINGS SHALL BE PAINT EAST OF STA 12+50 AND TAPE WEST OF STA 12+50.

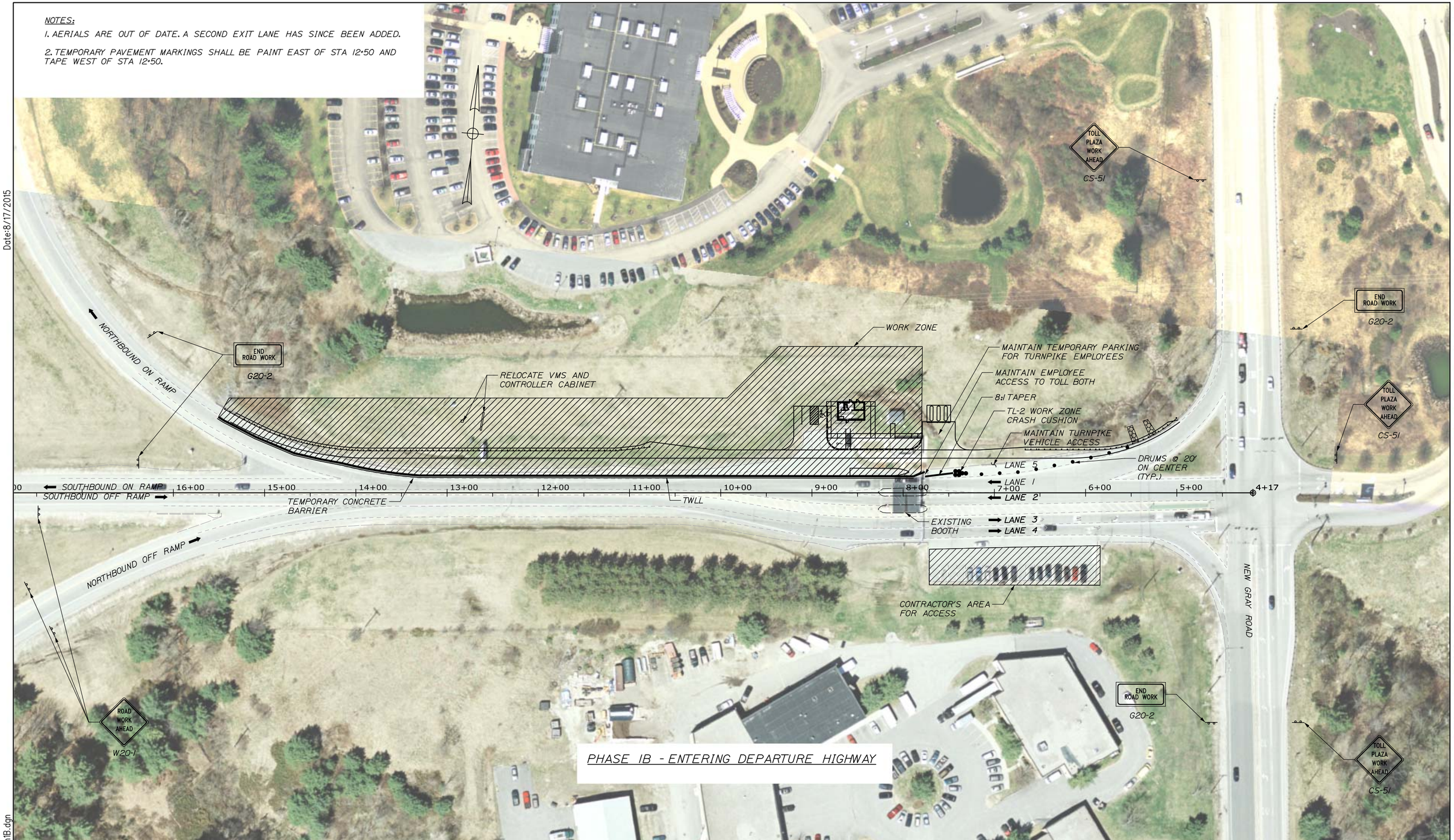

Date:8/17/2015

Filename: 008_Exit53_MOT_Ph1B.dgn

Scale: 50 0 50 100

No.	Revision	By	Date

Designed by:

HNTB

CONSULTANT PROJECT MANAGER: R. Bruce Munger, P.E.

	By	Date		By	Date
Designed	JRD	08/15	Checked	TMH	08/15
Drawn	PMK	08/15	In Charge of	RAL	08/15

HNTB CORPORATION
340 County Road, Suite 6-C
Westbrook, ME 04092
TEL (207) 774-5155
FAX (207) 228-0909

MAINE TURNPIKE

THE GOLD STAR MEMORIAL HIGHWAY

MTA PROJECT MANAGER: William Yates

INTERCHANGE 53 TOLL PLAZA REPLACEMENT

MAINTENANCE OF TRAFFIC PLAN PHASE 1B

SHEET NUMBER: MT-02

CONTRACT:2015.09

NOTES:

1. AERIALS ARE OUT OF DATE. A SECOND EXIT LANE HAS SINCE BEEN ADDED.

2. TEMPORARY PAVEMENT MARKINGS SHALL BE PAINT EAST OF STA 12+50 AND TAPE WEST OF STA 12+50.

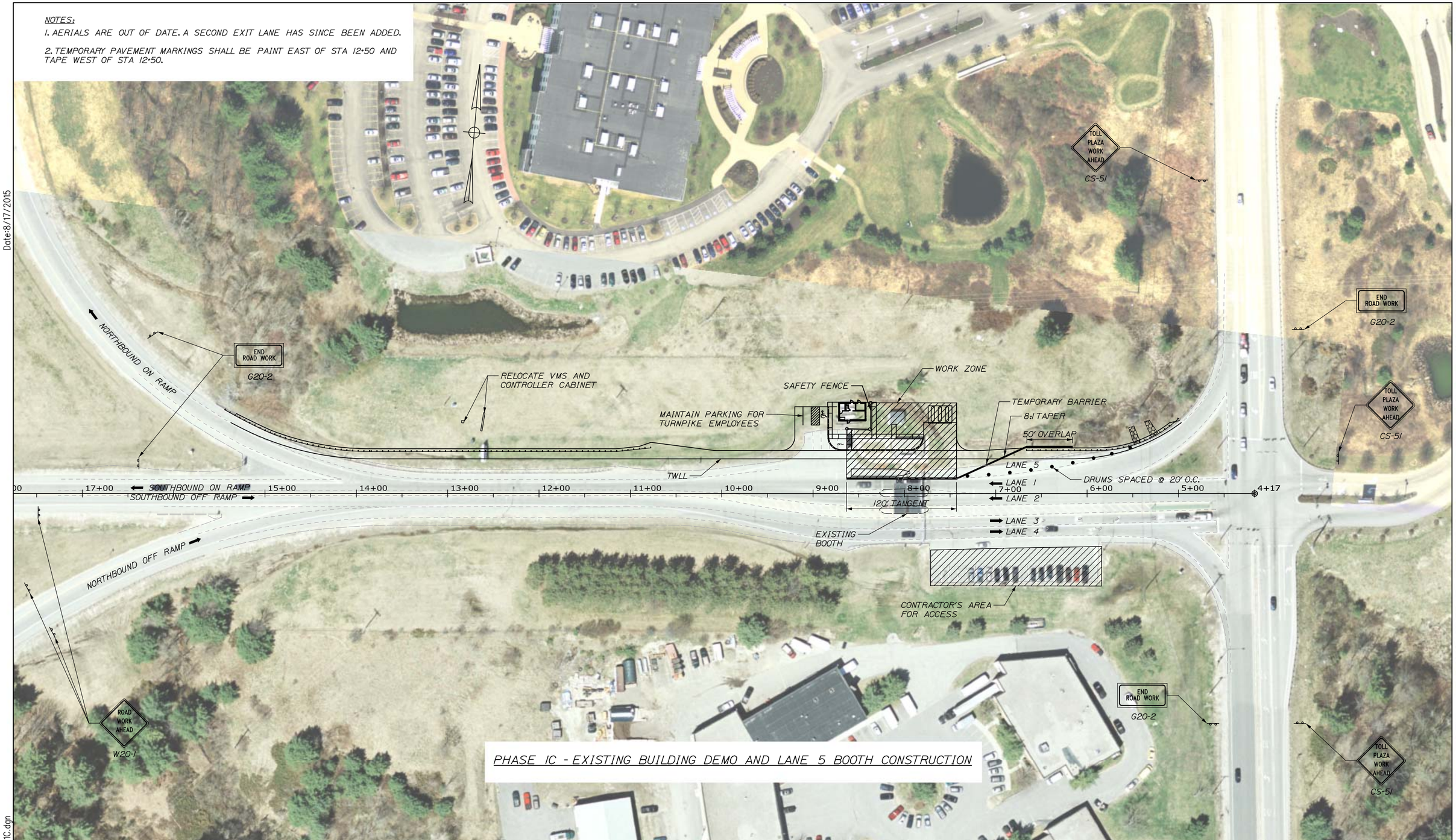

PHASE 1C - EXISTING BUILDING DEMO AND LANE 5 BOOTH CONSTRUCTION

Date:8/17/2015

Filename: 009_Exit53_MOT_Ph1C.dgn

Scale: 50 0 50 100

No.	Revision	By	Date

Designed by: HNTB

CONSULTANT PROJECT MANAGER: R. Bruce Munger, P.E.

	By	Date		By	Date
Designed	JRD	08/15	Checked	TMH	08/15
Drawn	PMK	08/15	In Charge of	RAL	08/15

HNTB CORPORATION
340 County Road, Suite 6-C
Westbrook, ME 04092
TEL (207) 774-5155
FAX (207) 228-0909

MAINE TURNPIKE

THE GOLD STAR MEMORIAL HIGHWAY

MTA PROJECT MANAGER: William Yates

INTERCHANGE 53
TOLL PLAZA REPLACEMENT

MAINTENANCE OF TRAFFIC PLAN
PHASE 1C

SHEET NUMBER: MT-03

CONTRACT:2015.09

NOTES:

1. AERIALS ARE OUT OF DATE. A SECOND EXIT LANE HAS SINCE BEEN ADDED.

2. TEMPORARY PAVEMENT MARKINGS SHALL BE PAINT EAST OF STA 12+50 AND TAPE WEST OF STA 12+50.

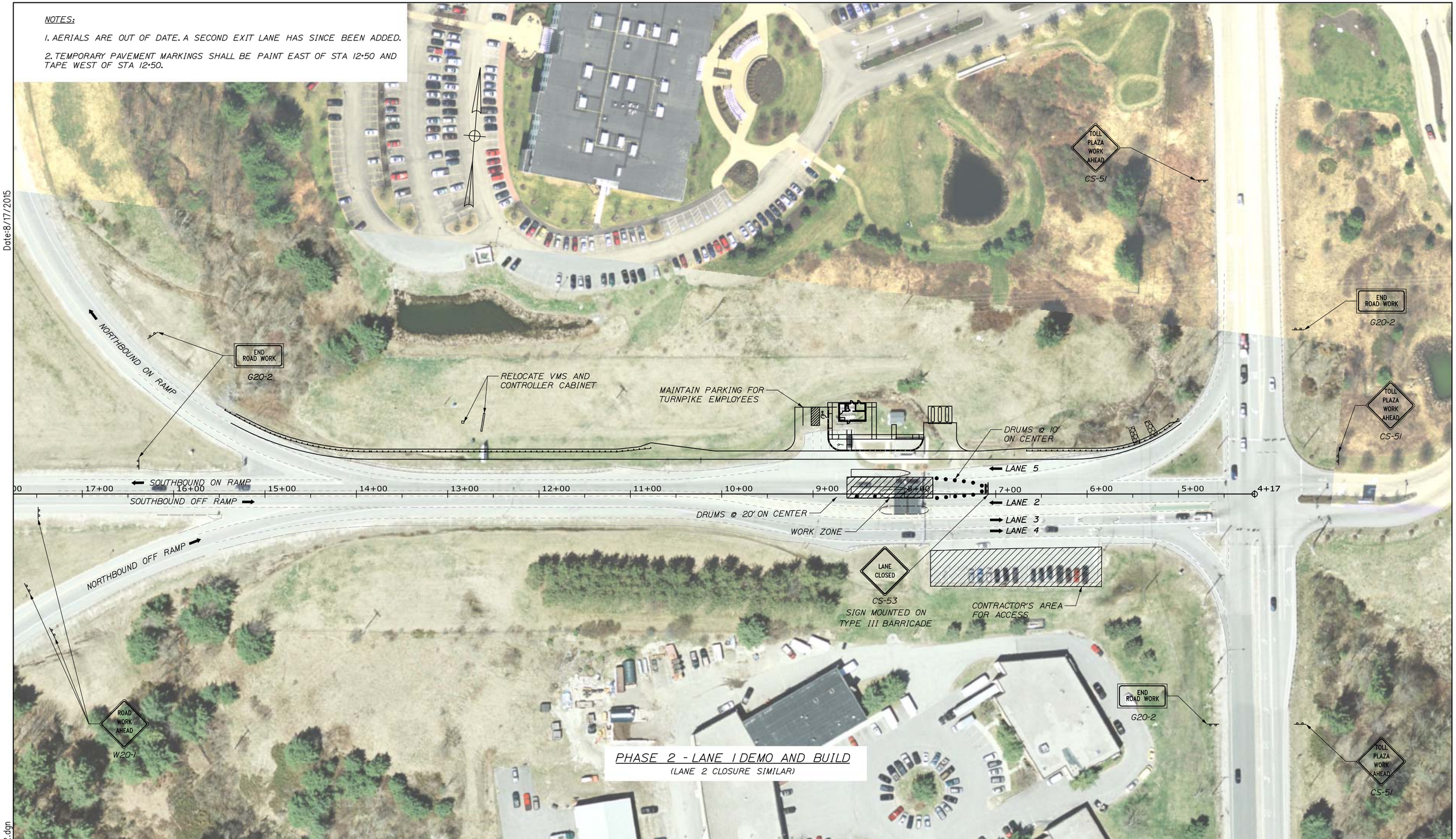

Date:8/17/2015

Filename: 010_Exit53_MOT_Ph2.dgn

Scale: 50 0 50 100

No.	Revision	By	Date

Designed by:

HNTB

CONSULTANT PROJECT MANAGER: R. Bruce Munger, P.E.

	By	Date		By	Date
Designed	JRD	08/15	Checked	TMH	08/15
Drawn	PMK	08/15	In Charge of	RAL	08/15

HNTB CORPORATION
340 County Road, Suite 6-C
Westbrook, ME 04092
TEL (207) 774-5155
FAX (207) 228-0909

MAINE TURNPIKE

THE GOLD STAR MEMORIAL HIGHWAY

MTA PROJECT MANAGER: William Yates

INTERCHANGE 53
TOLL PLAZA REPLACEMENT

MAINTENANCE OF TRAFFIC PLAN
PHASE 2

SHEET NUMBER: MT-04

CONTRACT:2015.09

NOTES:

1. AERIALS ARE OUT OF DATE. A SECOND EXIT LANE HAS SINCE BEEN ADDED.

2. TEMPORARY PAVEMENT MARKINGS SHALL BE PAINT EAST OF STA. 12+50 AND TAPE WEST OF STA. 12+50.

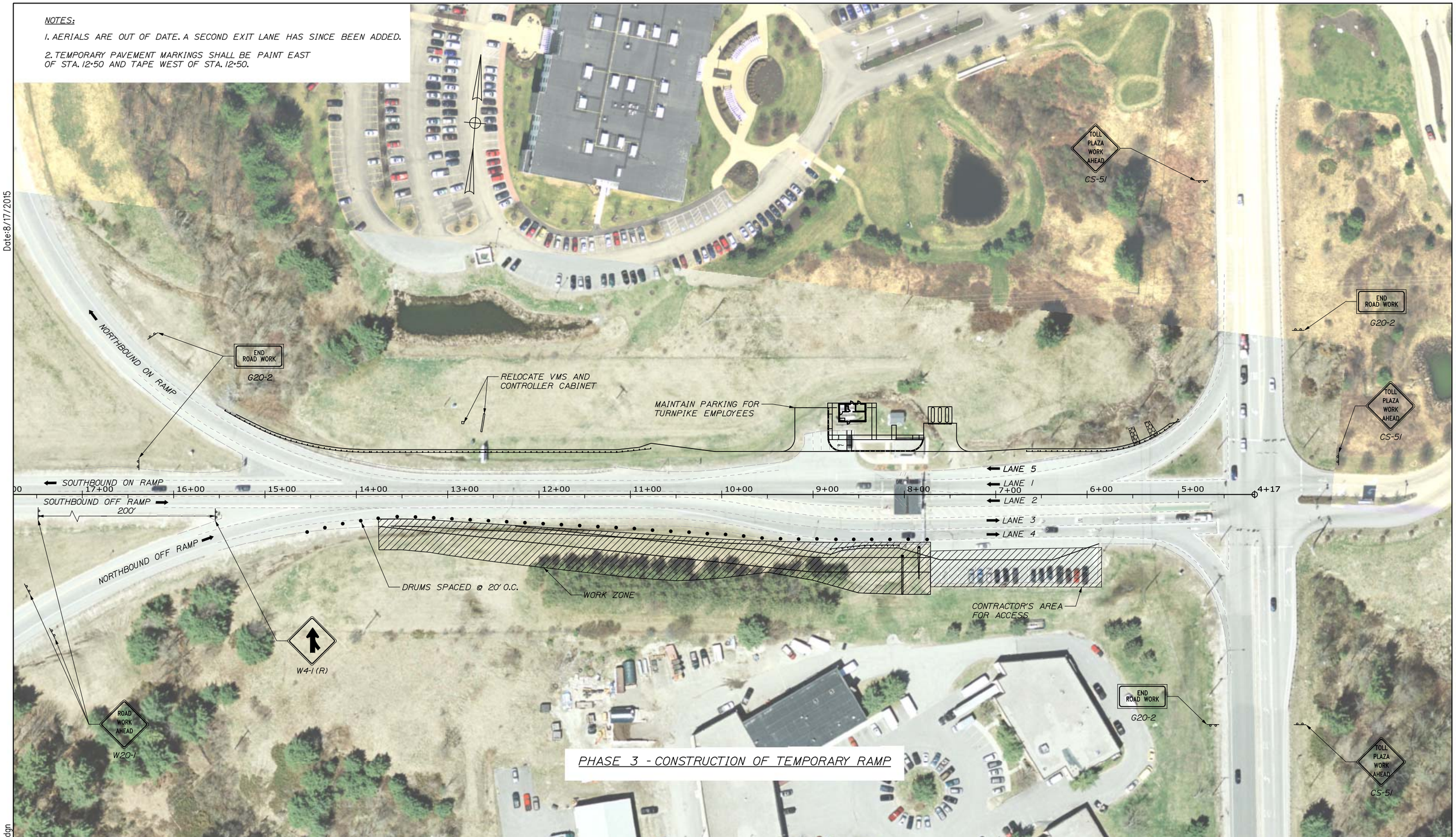

PHASE 3 - CONSTRUCTION OF TEMPORARY RAMP

Date:8/17/2015

Filename: 011_Exit53_MOT_Ph3.dgn

Scale: 50 0 50 100

No.	Revision	By	Date

Designed by:

HNTB

CONSULTANT PROJECT MANAGER: R. Bruce Munger, P.E.

	By	Date		By	Date
Designed	JRD	08/15	Checked	TMH	08/15
Drawn	PMK	08/15	In Charge of	RAL	08/15

HNTB CORPORATION
340 County Road, Suite 6-C
Westbrook, ME 04092
TEL (207) 774-5155
FAX (207) 228-0909

MAINE TURNPIKE

THE GOLD STAR MEMORIAL HIGHWAY

MTA PROJECT MANAGER: William Yates

INTERCHANGE 53
TOLL PLAZA REPLACEMENT

MAINTENANCE OF TRAFFIC PLAN
PHASE 3

SHEET NUMBER: MT-05

CONTRACT:2015.09

NOTES:

1. AERIALS ARE OUT OF DATE. A SECOND EXIT LANE HAS SINCE BEEN ADDED.

2. TEMPORARY PAVEMENT MARKINGS SHALL BE PAINT EAST OF STA. 12+50 AND TAPE WEST OF STA. 12+50.

3. SEE SHEETS TD-01 THROUGH TD-08 FOR CONSTRUCTION OF THE TEMPORARY DETOUR.

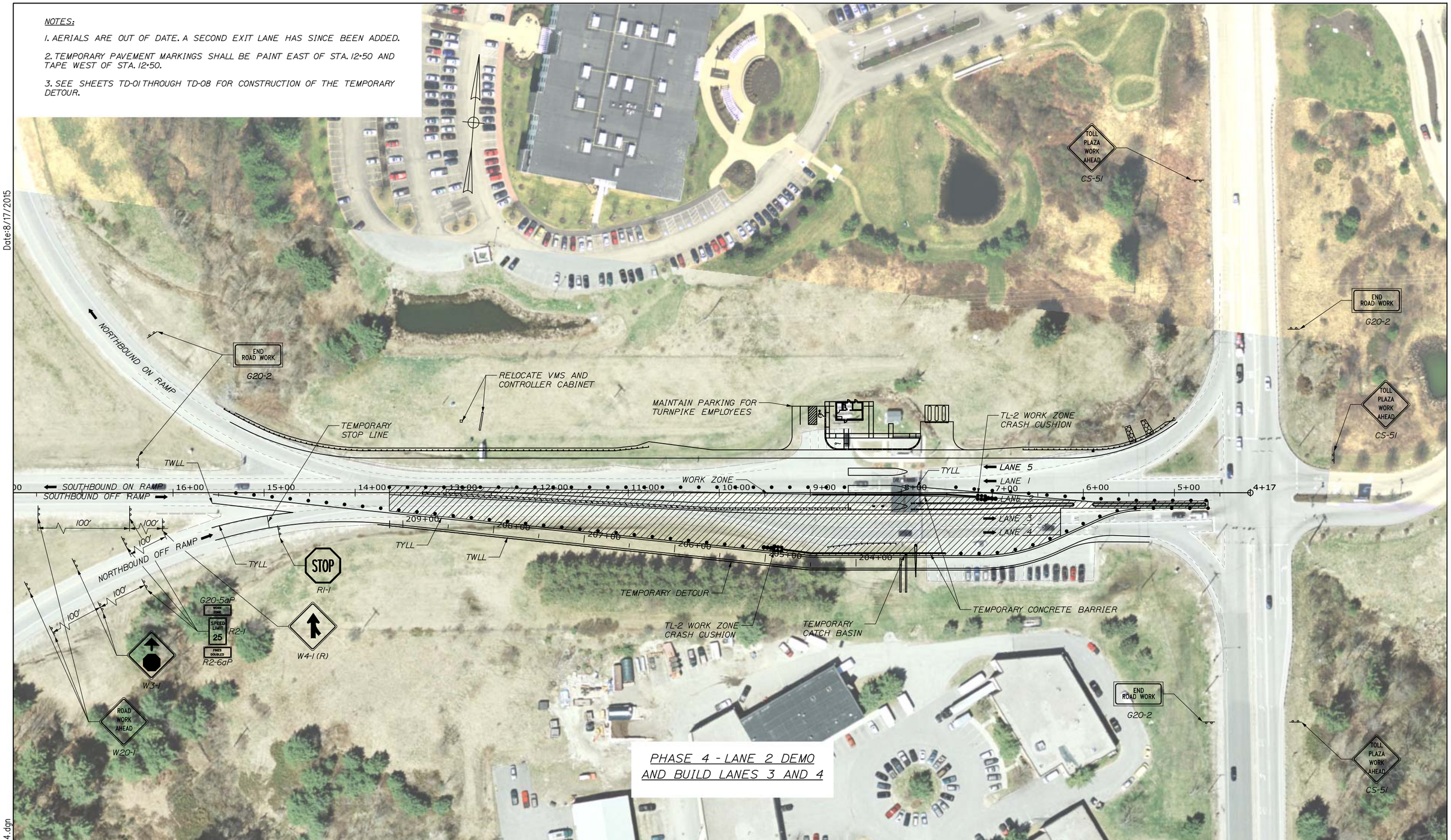

Date:8/17/2015

Filename: 012_Exit53_MOT_Ph4.dgn

Scale: 50 0 50 100

No.	Revision	By	Date

Designed by:

HNTB

CONSULTANT PROJECT MANAGER: R. Bruce Munger, P.E.

	By	Date		By	Date
Designed	JRD	08/15	Checked	TMH	08/15
Drawn	PMK	08/15	In Charge of	RAL	08/15

HNTB CORPORATION
340 County Road, Suite 6-C
Westbrook, ME 04092
TEL (207) 774-5155
FAX (207) 228-0909

MAINE TURNPIKE

THE GOLD STAR MEMORIAL HIGHWAY

MTA PROJECT MANAGER: William Yates

INTERCHANGE 53 TOLL PLAZA REPLACEMENT

MAINTENANCE OF TRAFFIC PLAN PHASE 4

SHEET NUMBER: MT-06

CONTRACT:2015.09

NOTES:

1. AERIALS ARE OUT OF DATE. A SECOND EXIT LANE HAS SINCE BEEN ADDED.

2. TEMPORARY PAVEMENT MARKINGS SHALL BE PAINT EAST OF STA 12+50 AND TAPE WEST OF STA 12+50.

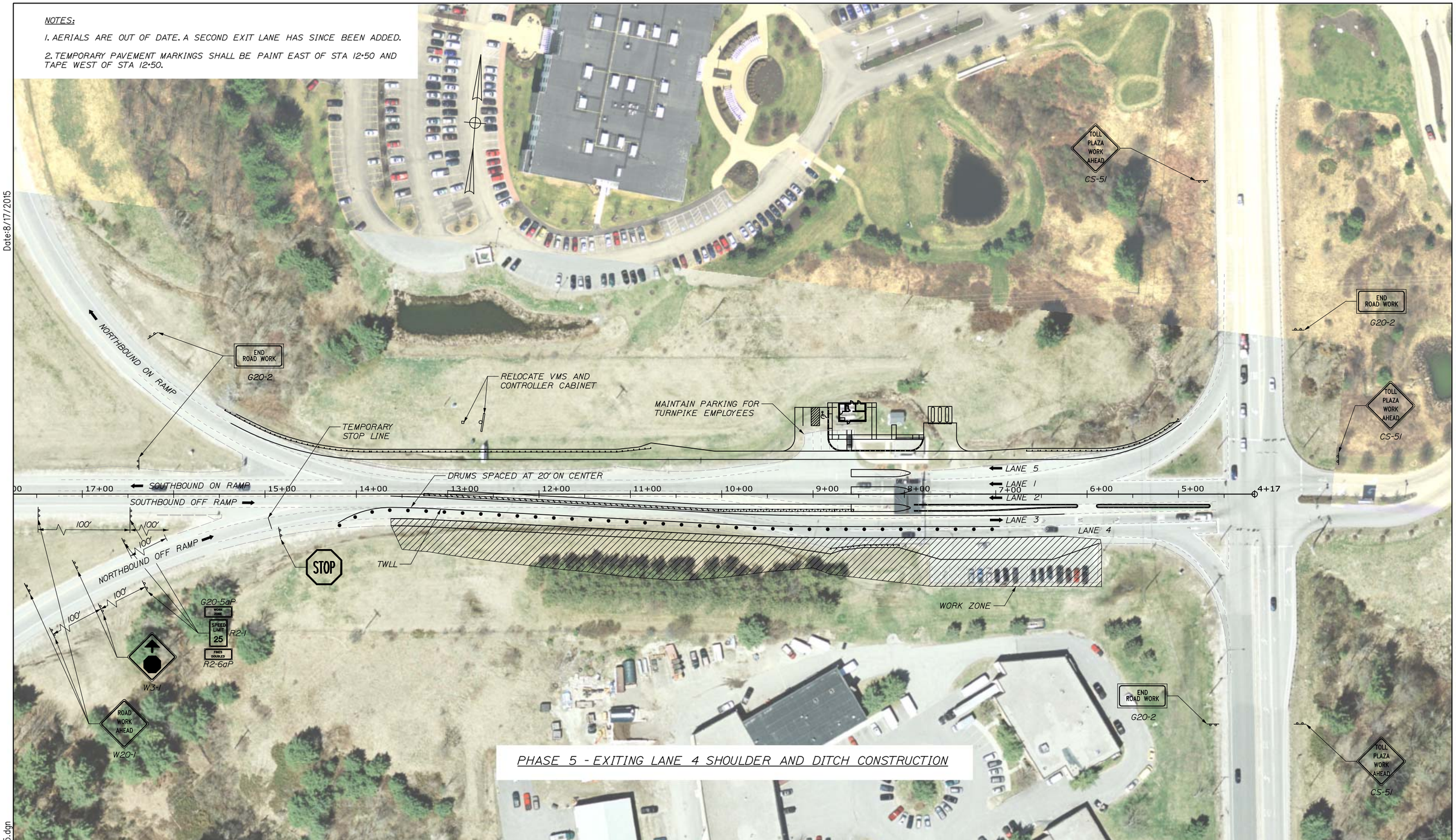

PHASE 5 - EXITING LANE 4 SHOULDER AND DITCH CONSTRUCTION

Date:8/17/2015

Filename: 013_Exit53_MOT_Ph5.dgn

Scale: 50 0 50 100

No.	Revision	By	Date

Designed by: HNTB

CONSULTANT PROJECT MANAGER: R. Bruce Munger, P.E.

	By	Date		By	Date
Designed	JRD	08/15	Checked	TMH	08/15
Drawn	PMK	08/15	In Charge of	RAL	08/15

HNTB CORPORATION
340 County Road, Suite 6-C
Westbrook, ME 04092
TEL (207) 774-5155
FAX (207) 228-0909

MAINE TURNPIKE

THE GOLD STAR MEMORIAL HIGHWAY

MTA PROJECT MANAGER: William Yates

INTERCHANGE 53
TOLL PLAZA REPLACEMENT
MAINTENANCE OF TRAFFIC PLAN
PHASE 5

SHEET NUMBER: MT-07

CONTRACT:2015.09

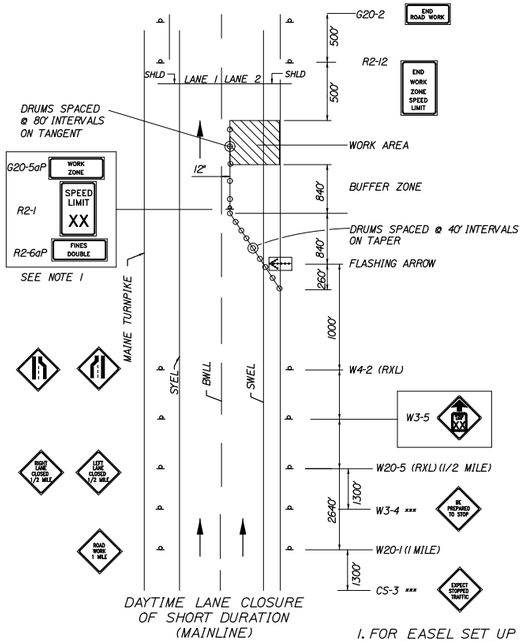

DAYTIME LANE CLOSURE
OF SHORT DURATION
(MAINLINE)

SINGLE LANE CLOSURE SIGNS ON EASELS

1. FOR EASEL SET UP ONLY. THIS SIGN IS NOT BRACKETED. ONE SIGN ASSEMBLY IS PLACED AT THE END OF THE TAPER .

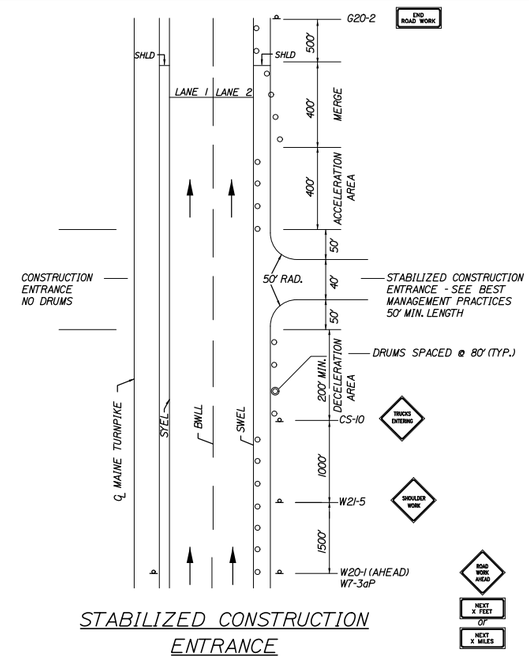

STABILIZED CONSTRUCTION ENTRANCE

1. SIGN G20-2 IS NOT REQUIRED IF ENTRANCE IS WITHIN THE WORK ZONE.

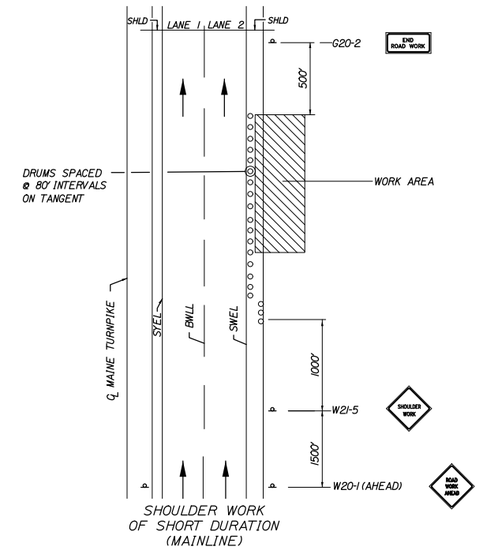

SHOULDER WORK
OF SHORT DURATION
(MAINLINE)

SHOULDER WORK

1. THE W20-1 AND G20-2 SIGNS ARE NOT REQUIRED IF THE SHOULDER CLOSURE IS WITHIN A PREVIOUSLY ESTABLISHED WORK ZONE.

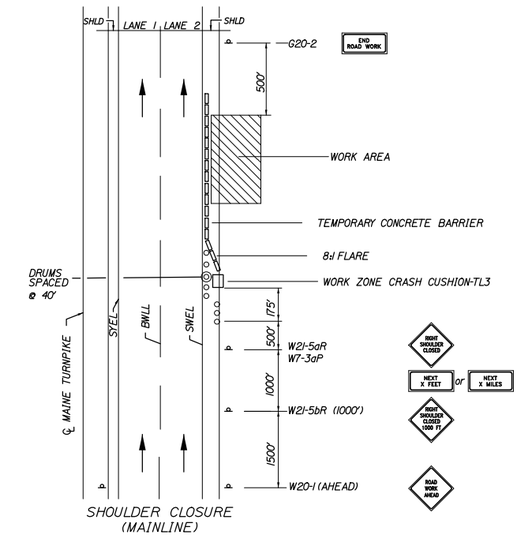

SHOULDER CLOSURE
(MAINLINE)

SHOULDER CLOSURE

1. THE W20-1 AND G20-2 SIGNS ARE NOT REQUIRED IF THE SHOULDER CLOSURE IS WITHIN A PREVIOUSLY ESTABLISHED WORK ZONE.

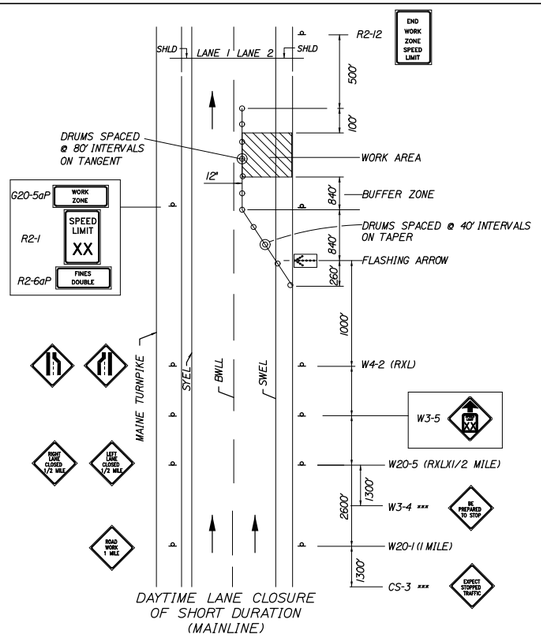

DAYTIME LANE CLOSURE
OF SHORT DURATION
(MAINLINE)

SINGLE LANE CLOSURE - POST MOUNTED SIGN SETUP

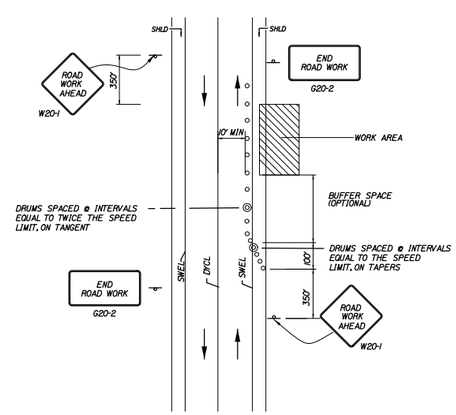

TEMP. LOCAL ROAD SHOULDER CLOSURE

1. FOR SHORT DURATION WORK (<1 HOUR), THE TAPER AND CHANNELIZATION DEVICES MAY BE OMITTED IF SHADOW VEHICLE IS PRESENT WITH ACTIVATED HIGH-INTENSITY ROTATING, FLASHING, OSCILLATING OR STROBE LIGHTS.

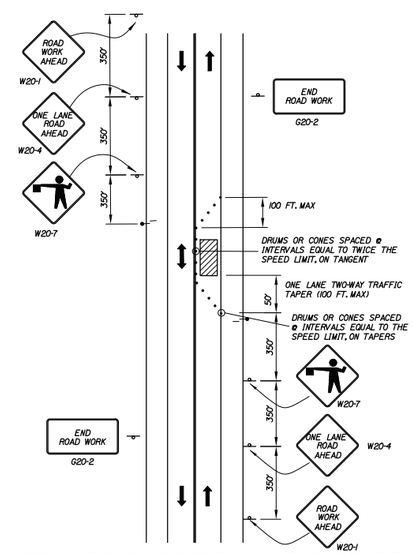

LOCAL ROAD SINGLE LANE CLOSURE

1. ROAD WORK AHEAD & END ROAD WORK SIGNS MAY BE OMITTED FOR SHORT DURATION OPERATIONS (LESS THAN 1 HOUR).
2. FLAGGERS SHALL BE LOCATED SO THEY ARE CLEARLY VISIBLE TO APPROACHING DRIVERS.
3. SIGN SPACING ASSUMES LOCAL ROAD SPEED IS 40 MPH OR LESS.

ABBREVIATIONS FOR ALL M.O.T. PLANS

BWLL = BROKEN WHITE LANE LINE
SWEL = SOLID WHITE EDGE LINE
SYEL = SOLID YELLOW EDGE LINE
TBWLL - TEMPORARY BROKEN WHITE LANE LINE
TSWEL = TEMPORARY SOLID WHITE EDGE LINE
TSYEL = TEMPORARY SOLID YELLOW EDGE LINE

GENERAL NOTES

1. FOR SIGN DETAILS, SEE MAINTENANCE OF TRAFFIC SIGN SUMMARY SHEETS.

2. "TRUCKS ENTERING" SIGN SHALL ALSO BE USED AT LOCATIONS WHERE TRUCKS ENTER THE WORK ZONE FROM THE TRAVEL LANE.

3. SIGNS DESIGNATED WITH *** SHALL BE USED DURING STOPPAGES OF TRAFFIC.

4. TRUCK MOUNTED ATTENUATOR SHALL NOT BE LOCATED WITHIN THE BUFFER ZONE.

Date:8/17/2015

Filename: 014_MOTDetails.dgn

Scale: N.T.S.

No.	Revision	By	Date

Designed by: HNTB

CONSULTANT PROJECT MANAGER: R. Bruce Munger, P.E.

	By	Date		By	Date
Designed	TMH	08/15	Checked	HME	08/15
Drawn	PMK	08/15	In Charge of	RAL	08/15

HNTB CORPORATION
340 County Road, Suite 6-C
Westbrook, ME 04092
TEL (207) 774-5155
FAX (207) 228-0909

MAINE TURNPIKE

THE GOLD STAR MEMORIAL HIGHWAY

MTA PROJECT MANAGER: William Yates

INTERCHANGE 53
TOLL PLAZA REPLACEMENT
MAINTENANCE OF TRAFFIC DETAILS

SHEET NUMBER: MT-08

CONTRACT:2015.09

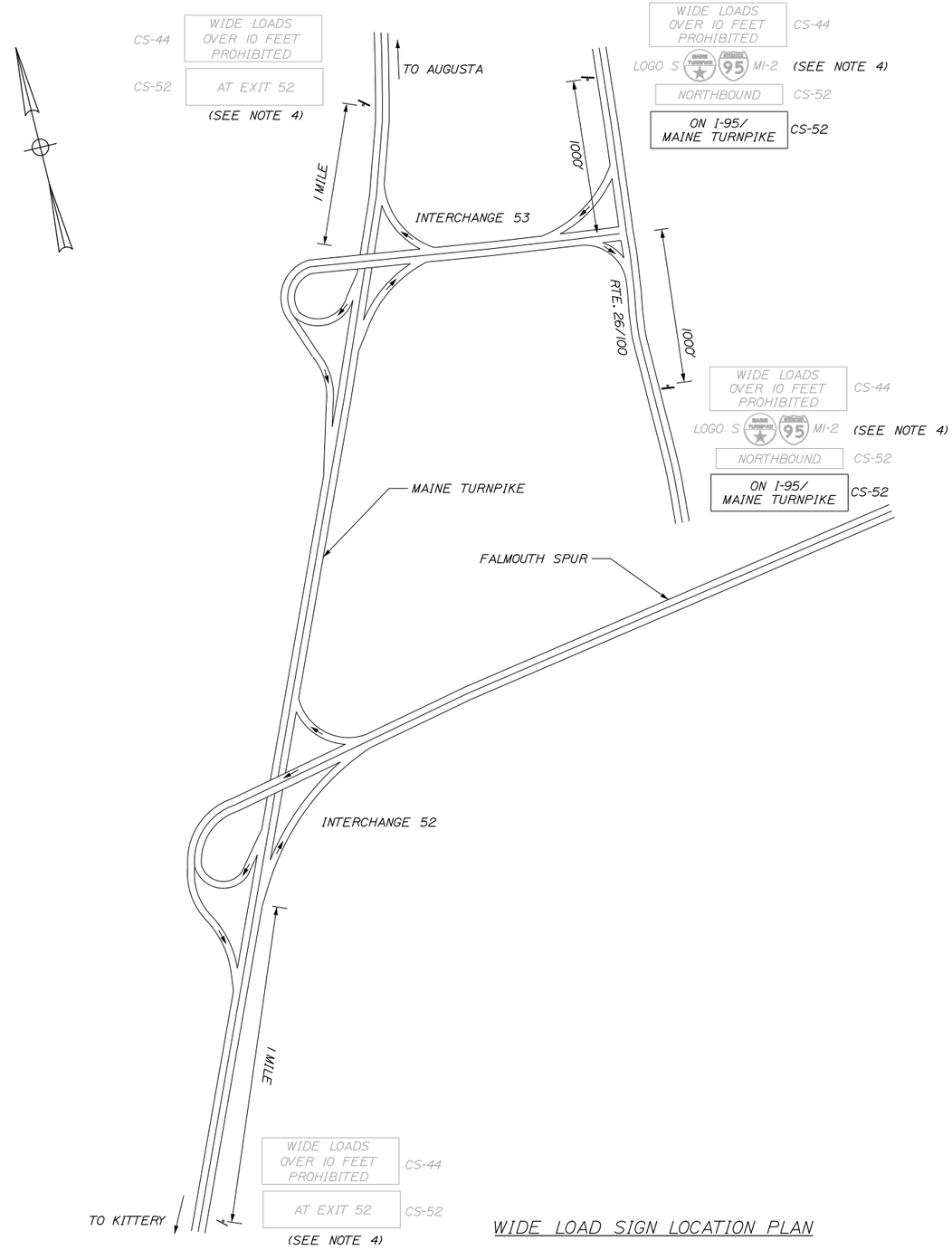

WIDE LOAD SIGN LOCATION PLAN

GENERAL MAINTENANCE OF TRAFFIC NOTES:

1. ALL WORK TO CONFORM TO MAINE DEPARTMENT OF TRANSPORTATION STANDARD SPECIFICATIONS FOR HIGHWAY AND BRIDGES, 2002 EDITION, EXCEPT AS MODIFIED BY THE MAINE TURNPIKE AUTHORITY'S GENERAL AND SPECIAL PROVISIONS.
2. THESE PLANS SHOW THE GENERAL CONDITION FOR TURNPIKE MAINLINE TRAFFIC CONTROL. DURING CONSTRUCTION, SLIGHT MODIFICATIONS IN CONSTRUCTION PROCEDURE MAY OCCUR AND MAY REQUIRE SOME MINOR ADJUSTMENTS TO BE MADE IN THE FIELD, ALL PROCEDURES MUST BE APPROVED BY THE RESIDENT.
3. ALL SIGNS TO BE MOUNTED ON NCHRP 350 APPROVED POSTS UNLESS BEHIND GUARDRAIL.
4. SOME WIDE LOAD SIGNAGE WILL BE IN PLACE AS PART OF CONTRACT 2015.13. CONTRACTOR SHALL COORDINATE PLAQUE C5-52 REPLACEMENT OR ADDITION TO SIGN ARRAY WITH 2015.13 RESTRICTIONS.
5. ALL PAVEMENT STRIPING & SIGNING SHALL BE IN ACCORDANCE WITH THE "MANUAL ON UNIFORM TRAFFIC CONTROL DEVICES", U.S.D.O.T., F.H.W.A., LATEST EDITION.
6. THE CONTRACTOR SHALL REMOVE ALL PAVEMENT MARKINGS THAT CONFLICT WITH PROPOSED PAVEMENT MARKINGS IN ACCORDANCE WITH THE SPECIFICATIONS AND MUTCD. PAYMENT SHALL BE MADE UNDER ITEM 627.77 - REMOVING EXISTING PAVEMENT MARKING.
7. TEMPORARY PAVEMENT MARKINGS SHALL BE PAINTED, UNLESS OTHERWISE NOTED. PAYMENT FOR MARKINGS SHALL BE UNDER ITEM 627.681 - TEMPORARY 6 INCH PAINTED PAVEMENT MARKING LINE, YELLOW OR WHITE.
8. ALL TEMPORARY BARRIER SHALL BE SET WITH A MINIMUM 8:1 TAPER. THE 8:1 TAPERED BARRIER LENGTH IS DEPENDENT ON THE LOCATION OF THE BARRIER RELATIVE TO THE MAINE TURNPIKE SHOULDERS OR LANES.
9. THERE SHALL BE NO TEMPORARY PAINTED PAVEMENT MARKINGS ON FINAL PAVEMENT.
10. THE AUTHORITY SHALL BE RESPONSIBLE FOR FINAL TURNPIKE STRIPING. THE CONTRACTOR SHALL LAYOUT THE STRIPING AND PROVIDE THE MAINTENANCE OF TRAFFIC CONTROL AND REMOVAL OF TEMPORARY PAVEMENT MARKINGS TO COMPLETE THIS WORK.

Date:8/17/2015

Filename: 015_MOT_Wide Load Plan.dgn

Scale: N.T.S.

No.	Revision	By	Date

Designed by: HNTB

CONSULTANT PROJECT MANAGER: R. Bruce Munger, P.E.

	By	Date		By	Date
Designed	WA	08/15	Checked	RBM	08/15
Drawn	WA	08/15	In Charge of	RAL	08/15

HNTB CORPORATION
340 County Road, Suite 6-C
Westbrook, ME 04092
TEL (207) 774-5155
FAX (207) 228-0909

MAINE TURNPIKE

THE GOLD STAR MEMORIAL HIGHWAY

MTA PROJECT MANAGER: William Yates

INTERCHANGE 53
TOLL PLAZA REPLACEMENT
MAINTENANCE OF TRAFFIC
WIDE LOAD RESTRICTION SIGN PLAN

SHEET NUMBER: MT-09

CONTRACT:2015.09

MAINLINE CONSTRUCTION SIGN SUMMARY

IDENTIFICATION NUMBER	SIZE OF SIGN		TEXT	TEXT DIMENSIONS (INCHES)			NUMBER OF SIGNS REQUIRED	COLOR		AREA IN SQUARE FEET
	WIDTH	HEIGHT		LETTER HEIGHT	VERTICAL SPACING	ARROW RTE. MKR.		BACK-GROUND	LEGEND BORDER	
CS-51	48"	48"	TOLL PLAZA WORK AHEAD	TEXT DIMENSIONS SHALL CONFORM TO "STANDARD HIGHWAY SIGNS" - 2000			3	ORANGE	BLACK	16.00 (48.0)
CS-52	72"	30"	ON I-95/ MAINE TURNPIKE	6" 6"	4"		2	ORANGE	BLACK	15.00 (30.0)
CS-53	48"	48"	LANE CLOSED	6" 6"	4"		1	ORANGE	BLACK	16.00 (16.0)
G20-2	48"	24"	END ROAD WORK	TEXT DIMENSIONS SHALL CONFORM TO THE STANDARD HIGHWAY SIGNS 2004 EDITION AND 2012 SUPPLEMENT			4	ORANGE	BLACK	8.00 (32.0)
G20-5aP	48"	24"	WORK ZONE	6" 6"	4.5"		3	ORANGE	BLACK	8.00 (16.0)
R1-1	48"	48"	STOP	TEXT DIMENSIONS SHALL CONFORM TO THE STANDARD HIGHWAY SIGNS 2004 EDITION AND 2012 SUPPLEMENT			1	RED	WHITE	16.00 (16.0)
R2-1 (25)	48"	60"	SPEED LIMIT 25				3	WHITE	BLACK	20.00 (40.0)
R2-6aP	48"	24"	FINES DOUBLED	6" 6"	4.5"		3	WHITE	BLACK	8.00 (16.0)
W3-1	48"	48"		TEXT DIMENSIONS SHALL CONFORM TO THE STANDARD HIGHWAY SIGNS 2004 EDITION AND 2012 SUPPLEMENT			2	ORANGE	BLACK	16.00 (32.0)
W1-4R	48"	48"					1	ORANGE	BLACK	16.00 (16.0)
W20-1	48"	48"	ROAD WORK AHEAD				3	ORANGE	BLACK	16.00 (32.0)

Date:8/17/2015

Date:8/17/2015

Filename: 016_MOT_Sign Sum01.dgn

Scale: 50 0 50 100
1" = 50'

No.	Revision	By	Date

Designed by: HNTB

CONSULTANT PROJECT MANAGER: R. Bruce Munger, P.E.

	By	Date		By	Date
Designed	TMH	08/15	Checked	HME	08/15
Drawn	PMK	08/15	In Charge of	RAL	08/15

HNTB CORPORATION
340 County Road, Suite 6-C
Westbrook, ME 04092
TEL (207) 774-5155
FAX (207) 228-0909

MAINE TURNPIKE

THE GOLD STAR MEMORIAL HIGHWAY

MTA PROJECT MANAGER: William Yates

INTERCHANGE 53
TOLL PLAZA REPLACEMENT
MAINTENANCE OF TRAFFIC
SIGN SUMMARY

SHEET NUMBER: MT-10

CONTRACT:2015.09

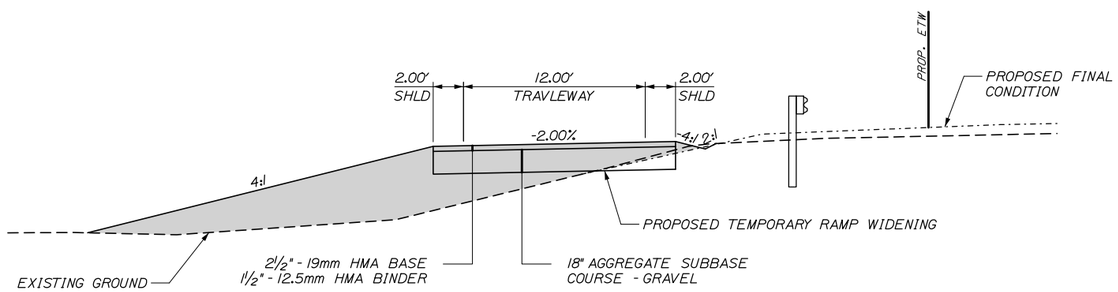

TEMPORARY DETOUR (FILL CONDITION)

STA 203+23 TO STA 207+00

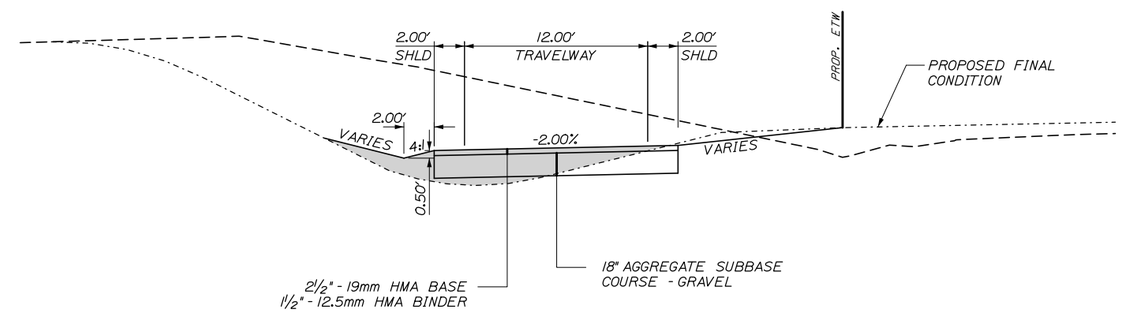

TEMPORARY DETOUR (CUT CONDITION)

STA 207+00 TO STA 209+27

Date:8/17/2015

Filename: 017_TemporaryDetour-TypicalSections01.dgn

Scale: AS NOTED

No.	Revision	By	Date

Designed by: HNTB

CONSULTANT PROJECT MANAGER: R. Bruce Munger, P.E.

	By	Date		By	Date
Designed	TJW	08/15	Checked	CDH	08/15
Drawn	TJW	08/15	In Charge of	RAL	08/15

HNTB CORPORATION
340 County Road, Suite 6-C
Westbrook, ME 04092
TEL (207) 774-5155
FAX (207) 228-0909

MAINE TURNPIKE

THE GOLD STAR MEMORIAL HIGHWAY

MTA PROJECT MANAGER: William Yates

INTERCHANGE 53
TOLL PLAZA REPLACEMENT

TEMPORARY DETOUR
TYPICAL SECTIONS

SHEET NUMBER: TD-01

CONTRACT:2015.09

NOTE:
1. STA. 203+23 RT TO STA. 204+50 RT TEMPORARY RAMP WORK IS IN A FILL CONDITION OUTSIDE OF PROPOSED FINISH GRADE.
2. STA. 204+50 RT TO STA. 209+14 RT TEMPORARY RAMP WORK IS IN A CUT CONDITION WITHIN THE PROPOSED FINISH GRADE.
3. THE EXISTING LIGHT SHALL BE MODIFIED TO PROVIDE LIGHITNG FOR THE TEMPORARY DETOUR FOR PHASE 3 CONSTRUCTION. PAYMENT ALL WORK AND/OR MATERIALS NECESSARY FOR LIGHTING OF THE TEMPORARY DETOUR IS INCIDENTAL TO THE TEMPORARY DETOUR PAY ITEM.

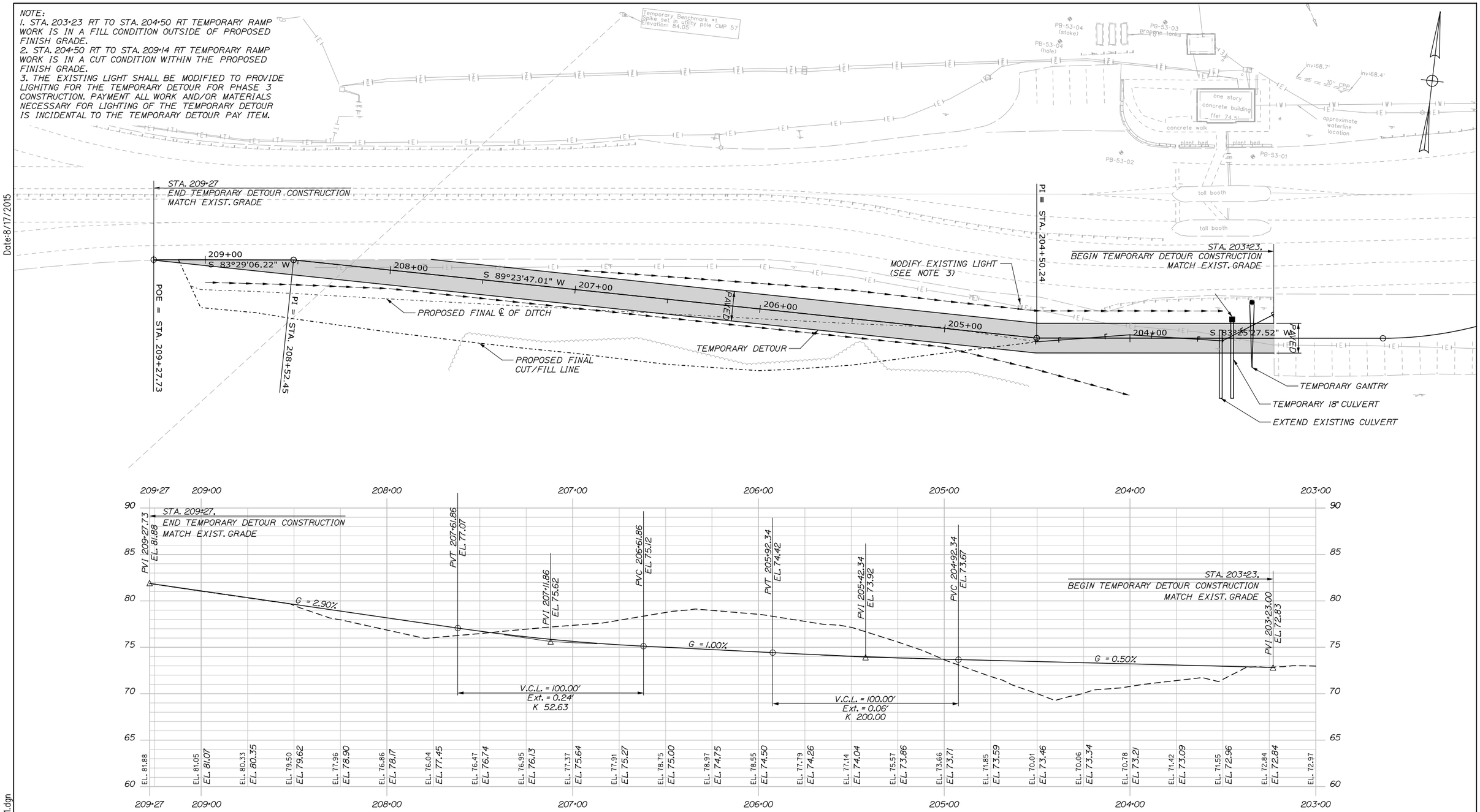

TEMPORARY DETOUR PROFILE

Date:8/17/2015

Filename: 018_TemporaryDetour_HDPlan01.dgn

Scale: 25 0 25 50

No.	Revision	By	Date

Designed by: HNTB

CONSULTANT PROJECT MANAGER: R. BRUCE MUNGER, P.E.

	By	Date		By	Date
Designed	TJW	08/15	Checked	CDH	08/15
Drawn	TJW	08/15	In Charge of	RAL	08/15

HNTB CORPORATION
340 County Road, Suite 6-C
Westbrook, ME 04092
TEL (207) 774-5155
FAX (207) 228-0909

MAINE TURNPIKE

THE GOLD STAR MEMORIAL HIGHWAY

MTA PROJECT MANAGER: William Yates

INTERCHANGE 53
TOLL PLAZA REPLACEMENT

TEMPORARY DETOUR
PLAN AND PROFILE

SHEET NUMBER: TD-02

CONTRACT:2015.09

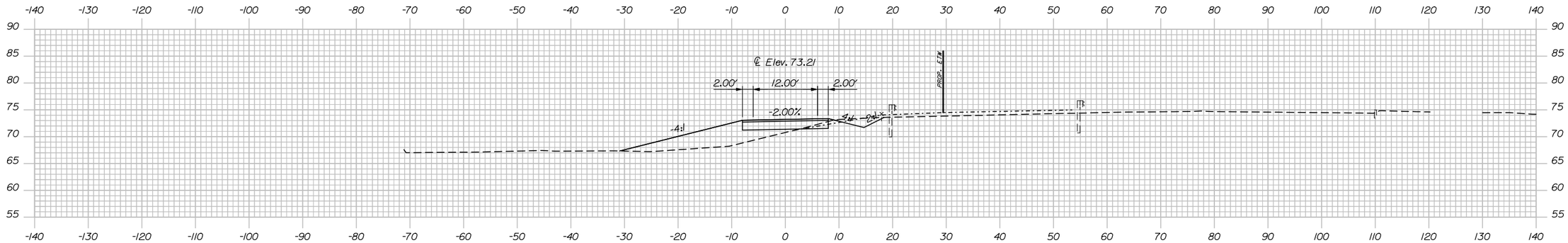

204+00.00

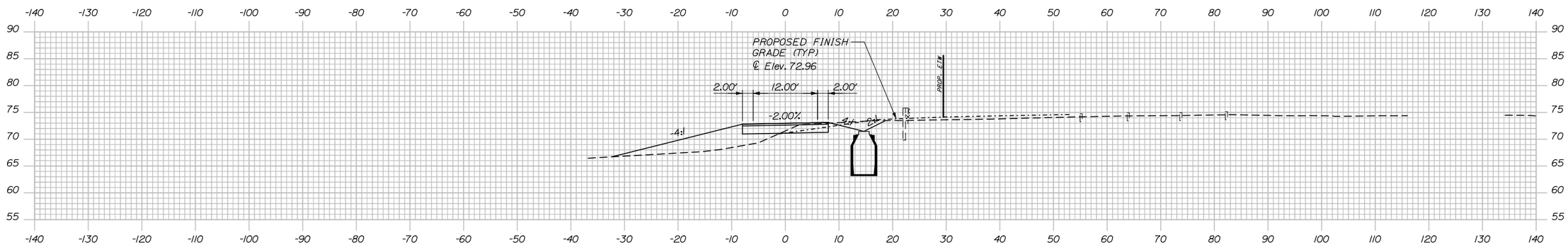

STA. 203+23
BEGIN TEMPORARY DETOUR
MATCH EXIST. GRADE

203+50.00

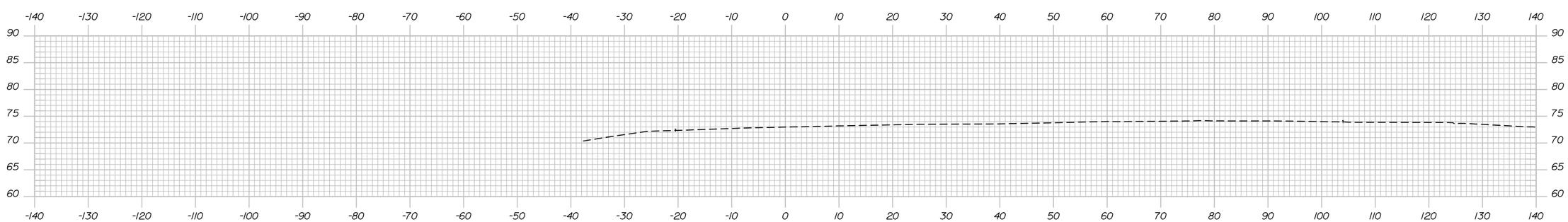

203+00.00

Date:8/17/2015

Filename: 019_TemporaryDetour-XSections.dgn

Scale:

No.	Revision	By	Date

Designed by:

HNTB

CONSULTANT PROJECT MANAGER: R. Bruce Munger, P.E.

	By	Date		By	Date
Designed	CDH	08/15	Checked	CDH	08/15
Drawn	TJW	08/15	In Charge of	RAL	08/15

HNTB CORPORATION
340 County Road, Suite 6-C
Westbrook, ME 04092
TEL (207) 774-5155
FAX (207) 228-0909

MAINE TURNPIKE

THE GOLD STAR MEMORIAL HIGHWAY

MTA PROJECT MANAGER: William Yates

INTERCHANGE 53
TOLL PLAZA REPLACEMENT
TEMPORARY DETOUR CROSS SECTIONS
STA. 203+00 TO STA. 204+00

SHEET NUMBER: TD-03

CONTRACT:2015.09

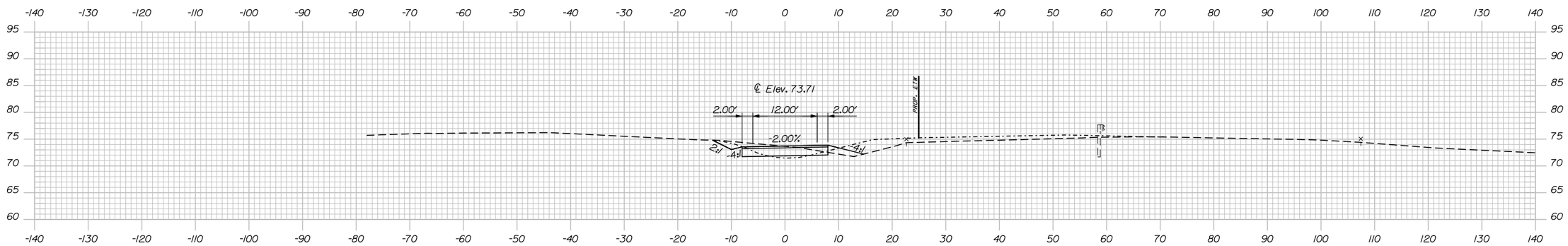

205+00.00

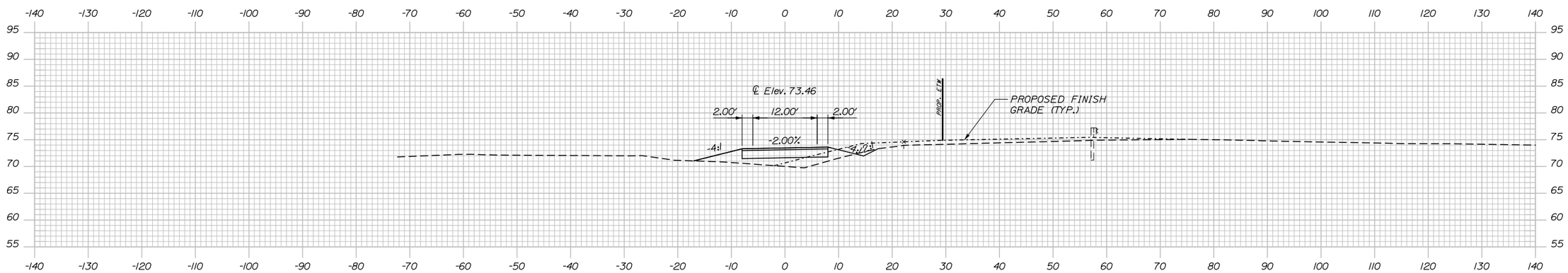

204+50.00

Scale:

No.	Revision	By	Date

Designed by:

HNTB

CONSULTANT PROJECT MANAGER: R. Bruce Munger, P.E.

	By	Date		By	Date
Designed	CDH	08/15	Checked	CDH	08/15
Drawn	TJW	08/15	In Charge of	RAL	08/15

HNTB CORPORATION
340 County Road, Suite 6-C
Westbrook, ME 04092
TEL (207) 774-5155
FAX (207) 228-0909

MAINE TURNPIKE

THE GOLD STAR MEMORIAL HIGHWAY

MTA PROJECT MANAGER: William Yates

INTERCHANGE 53
TOLL PLAZA REPLACEMENT
TEMPORARY DETOUR CROSS SECTIONS
STA. 204+50 TO STA. 205+00

SHEET NUMBER: TD-04

CONTRACT:2015.09

Date:8/17/2015

Filename: 020_TemporaryDetour-XSections.dgn

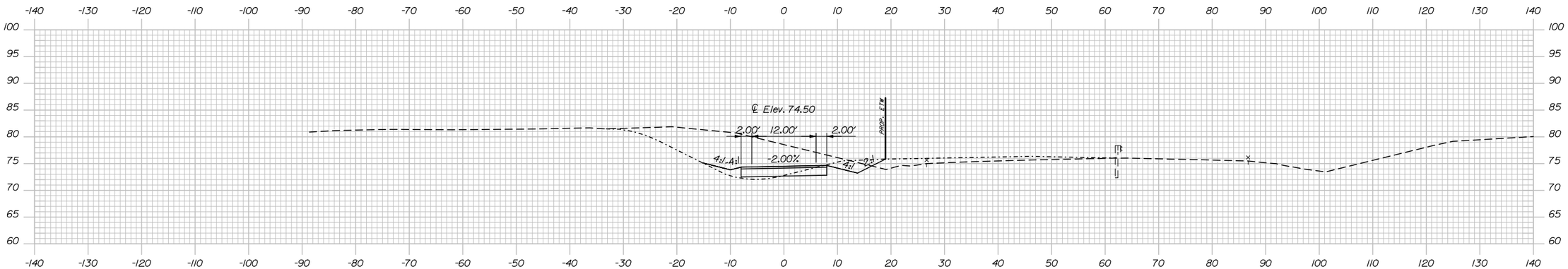

206+00.00

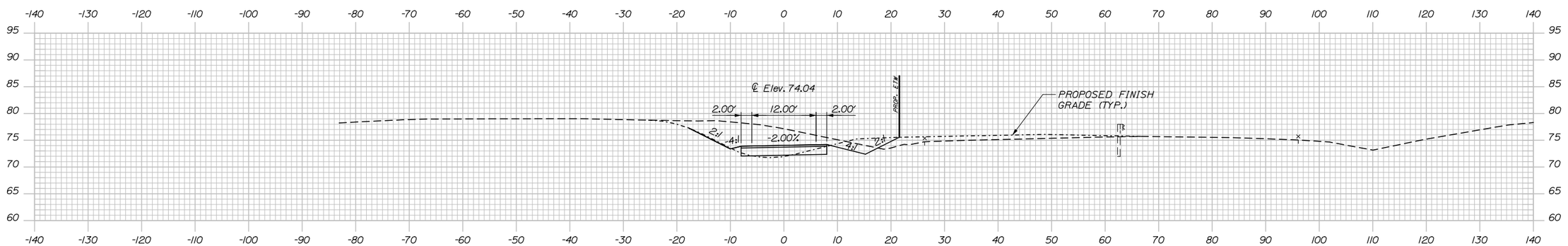

205+50.00

Date:8/17/2015

Filename: 021_TemporaryDetour-XSections.dgn

Scale:

No.	Revision	By	Date

Designed by:

HNTB

CONSULTANT PROJECT MANAGER: R. Bruce Munger, P.E.

	By	Date		By	Date
Designed	CDH	08/15	Checked	CDH	08/15
Drawn	TJW	08/15	In Charge of	RAL	08/15

HNTB CORPORATION
340 County Road, Suite 6-C
Westbrook, ME 04092
TEL (207) 774-5155
FAX (207) 228-0909

MAINE TURNPIKE

THE GOLD STAR MEMORIAL HIGHWAY

MTA PROJECT MANAGER: William Yates

INTERCHANGE 53
TOLL PLAZA REPLACEMENT
TEMPORARY DETOUR CROSS SECTIONS
STA. 205+50 TO STA. 206+00

SHEET NUMBER: TD-05

CONTRACT:2015.09

Date:8/17/2015

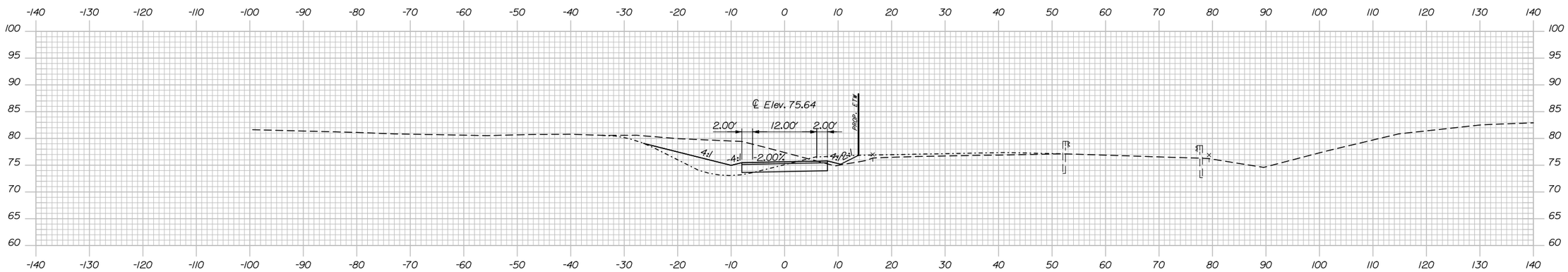

207+00.00

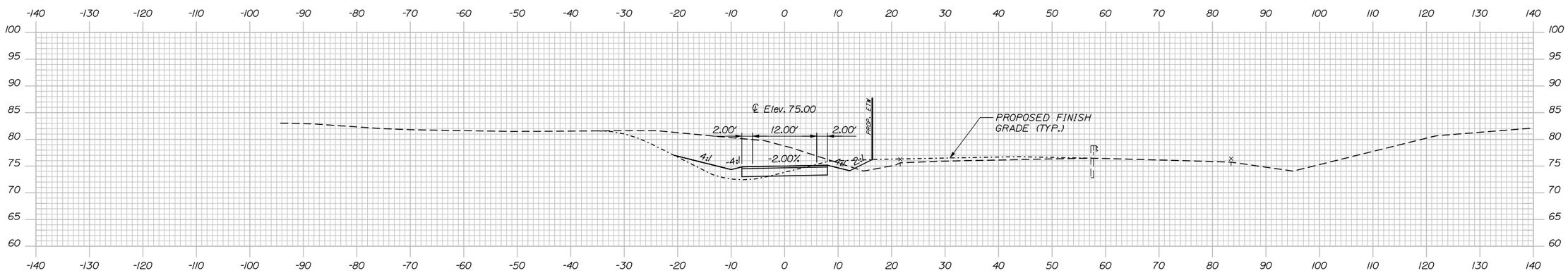

206+50.00

Filename: 022_TemporaryDetour-XSections.dgn

Scale:

No.	Revision	By	Date

Designed by:

HNTB

CONSULTANT PROJECT MANAGER: R. Bruce Munger, P.E.

	By	Date		By	Date
Designed	CDH	08/15	Checked	CDH	08/15
Drawn	TJW	08/15	In Charge of	RAL	08/15

HNTB CORPORATION
340 County Road, Suite 6-C
Westbrook, ME 04092
TEL (207) 774-5155
FAX (207) 228-0909

MAINE TURNPIKE

THE GOLD STAR MEMORIAL HIGHWAY

MTA PROJECT MANAGER: William Yates

INTERCHANGE 53
TOLL PLAZA REPLACEMENT
TEMPORARY DETOUR CROSS SECTIONS
STA. 206+50 TO STA. 207+00

SHEET NUMBER: TD-06

CONTRACT:2015.09

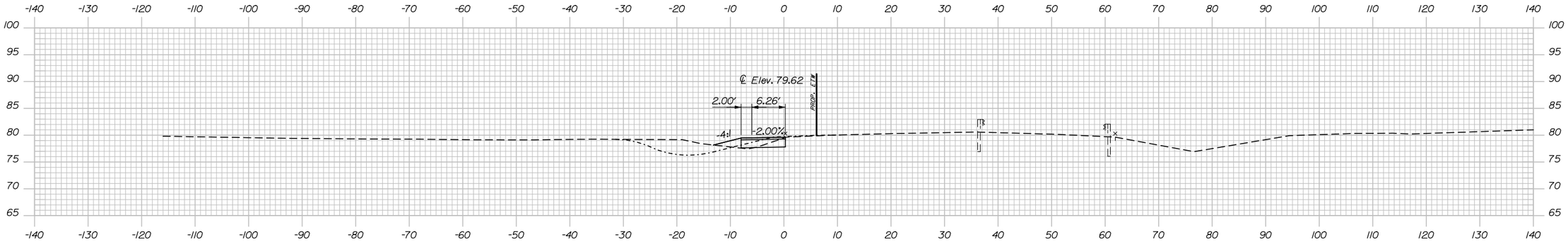

208+50.00

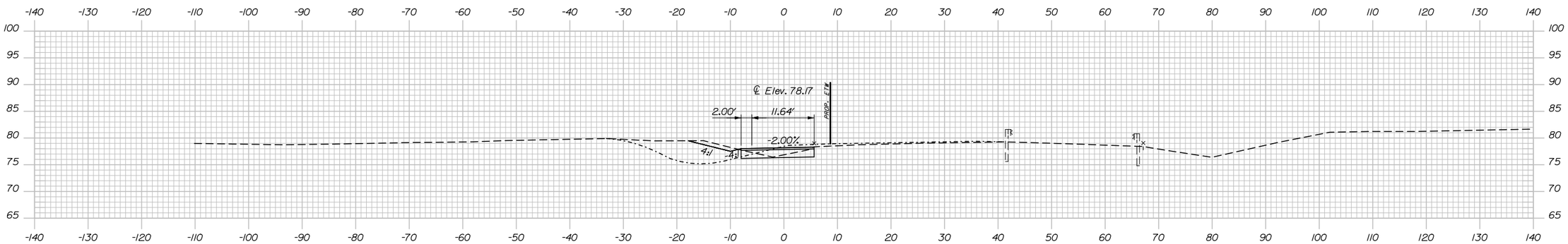

208+00.00

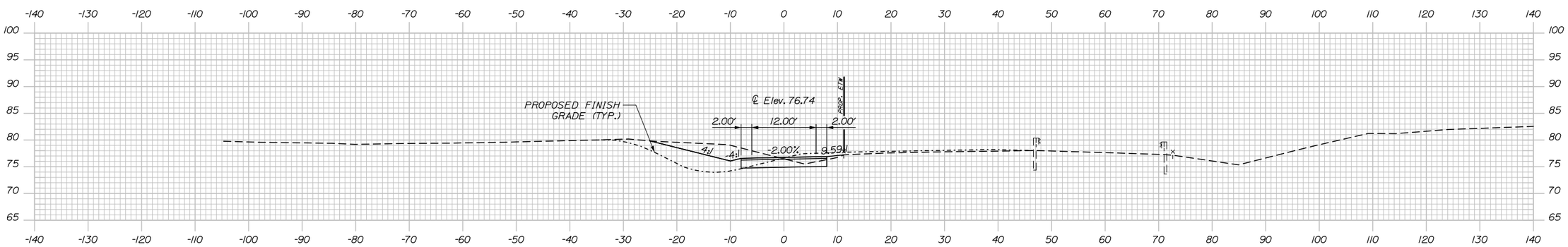

207+50.00

Date:8/17/2015

Filename: 023_TemporaryDetour-XSections.dgn

Scale:			
No.	Revision	By	Date

Designed by:

HNTB

CONSULTANT PROJECT MANAGER: R. Bruce Munger, P.E.

	By	Date		By	Date
Designed	CDH	08/15	Checked	CDH	08/15
Drawn	TJW	08/15	In Charge of	RAL	08/15

HNTB CORPORATION
340 County Road, Suite 6-C
Westbrook, ME 04092
TEL (207) 774-5155
FAX (207) 228-0909

MAINE TURNPIKE

THE GOLD STAR MEMORIAL HIGHWAY

MTA PROJECT MANAGER: William Yates

INTERCHANGE 53
TOLL PLAZA REPLACEMENT
TEMPORARY DETOUR CROSS SECTIONS
STA. 207+50 TO STA. 208+50

SHEET NUMBER: TD-07

CONTRACT:2015.09

Date:8/17/2015

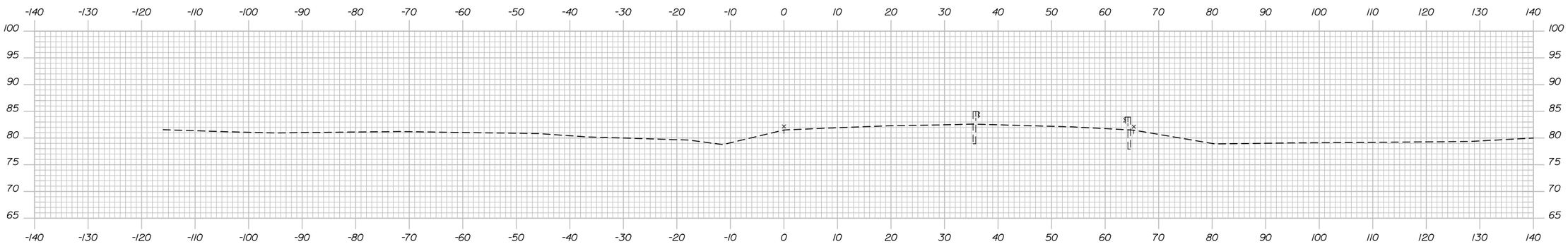

209+14.45

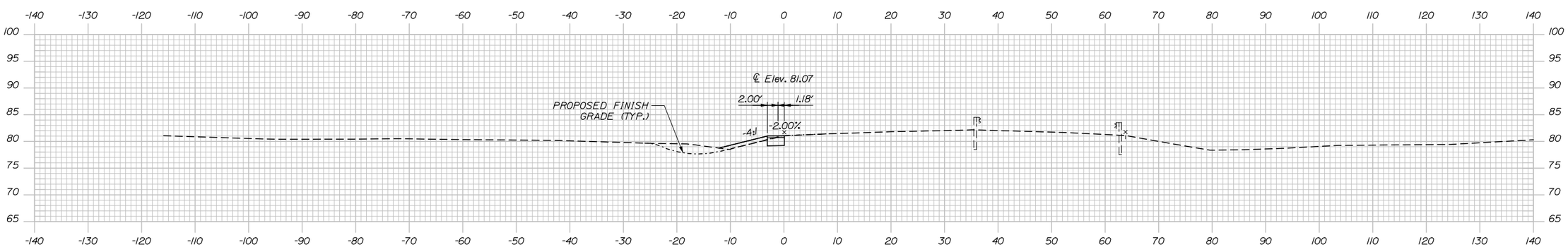

209+00.00

Filename: 024_TemporaryDetour-XSections.dgn

Scale:

No.	Revision	By	Date

Designed by:

HNTB

CONSULTANT PROJECT MANAGER: R. Bruce Munger, P.E.

	By	Date		By	Date
Designed	CDH	08/15	Checked	CDH	08/15
Drawn	TJW	08/15	In Charge of	RAL	08/15

HNTB CORPORATION
340 County Road, Suite 6-C
Westbrook, ME 04092
TEL (207) 774-5155
FAX (207) 228-0909

MAINE TURNPIKE

THE GOLD STAR MEMORIAL HIGHWAY

MTA PROJECT MANAGER: William Yates

INTERCHANGE 53
TOLL PLAZA REPLACEMENT
TEMPORARY DETOUR CROSS SECTIONS
STA. 209+00 TO STA. 209+14

SHEET NUMBER: TD-08

CONTRACT:2015.09

GUARDRAIL INSTALLATION AND MODIFICATION NOTES

1. THE CONTRACTOR SHALL FOLLOW ALL MANUFACTURER'S INSTALLATION INSTRUCTIONS FOR THE INSTALLATION AND/OR MODIFICATION OF ANY AND ALL GUARDRAIL COMPONENTS TO BE INSTALLED UNDER THIS CONTRACT. THE CONTRACTOR SHALL NOTIFY THE RESIDENT ENGINEER IF THE CONTRACTOR DISCOVERS CONFLICTS OR IRREGULARITIES OF ANY SORT BETWEEN THE MANUFACTURER'S INSTALLATION INSTRUCTIONS AND THESE CONTRACT DOCUMENTS.

2. THE CONTRACTOR IS REQUIRED TO HAVE AN APPROVED CRASH END TREATMENT ON ALL GUARDRAIL ENDS IN ALL WORK AREAS AT THE END OF EACH DAY. THE CONTRACTOR SHALL ENSURE THAT ENOUGH TIME EXISTS IN THE WORK DAY TO COMPLETE ALL MODIFICATIONS AND/OR INSTALLATIONS TO END TERMINALS. THE CONTRACTOR SHALL ENSURE THAT ALL PARTS AND MANPOWER ARE ON-SITE PRIOR TO UNDERTAKING ANY GUARDRAIL MODIFICATIONS.

3. GUARDRAIL HEIGHT SHALL BE INSTALLED OR ADJUSTED TO 30" +0", -1/2" HEIGHT. GUARDRAIL HEIGHT SHALL BE MEASURED FROM THE EDGE OF PAVEMENT WHEN WITHIN 2 FEET. IF GUARDRAIL IS OFFSET FROM EDGE OF PAVEMENT GREATER THAN 2 FEET, THEN HEIGHT OF RAIL SHALL BE MEASURED AT GROUND ELEVATION ADJACENT TO EACH POST BELOW THE RAIL TO THE TOP OF GUARDRAIL AND AFTER FINAL GRADING OF SHOULDER.

4. THE CONTRACTOR SHALL REMOVE AND DISPOSE OF ALL CUT BOLTS, DISCARDED PARTS, TRASH, PAVEMENT DEBRIS, ETC., AFTER COMPLETING GUARDRAIL MODIFICATIONS AND/OR INSTALLATIONS.

5. CONNECTIONS FOR PROPOSED RAIL TO EXISTING RAIL SHALL BE INCIDENTAL TO THE INSTALLATION OF PROPOSED GUARDRAIL.

6. FLEAT 350 TERMINALS INSTALLED UNDER THIS CONTRACT SHALL BE INSTALLED AT A HEIGHT OF 27.5" AT THE TERMINAL HEAD AND TRANSITIONING UP TO THE REQUIRED HEIGHT OF RAIL OF 30" +0", -1/2" OVER A 25 LINEAR FOOT LENGTH. HEIGHT OF FLEAT 350 RAIL SHALL BE MEASURED FROM THE GROUND ELEVATION UNDER THE FLEAT RAIL PANELS TO THE TOP OF RAIL.

7. SOIL ANCHOR TUBES INSTALLED AS PART OF CAT, FLEAT OR TRAILING TERMINAL ENDS SHALL NOT PROTRUDE FROM THE GROUND MORE THAN 3 1/2". ADDITIONAL SITE GRADING MAY BE REQUIRED TO ADJUST SOIL TUBE REVEAL AND IF REQUIRED SHALL NOT DIRECT STORMWATER SURFACE DRAINAGE TOWARDS THE SHOULDER OR TRAVEL WAY. ADDITIONAL SITE GRADING SHALL BE INCIDENTAL TO THE END TERMINAL INSTALLATION.

8. TRANSITION RAIL HEIGHT ON TERMINAL END-ANCHORED ENDS FROM 27 1/2" AT THE END OF THE RAIL TO 30" HEIGHT OVER A 25 LINEAR FOOT LENGTH.

9. TWO DELINEATOR POSTS SHALL BE INSTALLED AT EACH FLEAT.

10. COMPACTION OF EARTH AND/OR SUBBASE GRAVEL AROUND GUARDRAIL POSTS DISTURBED DURING THE WORK IS REQUIRED. ALL POSTS SHALL BE PLUMB AFTER COMPACTION.

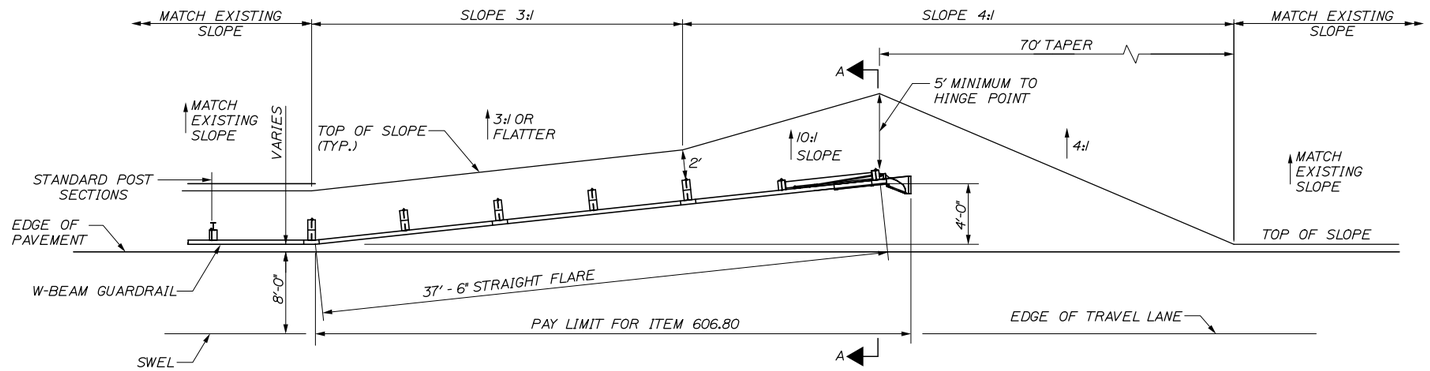

GUARDRAIL 350 FLARED TERMINAL PLAN

N.T.S.

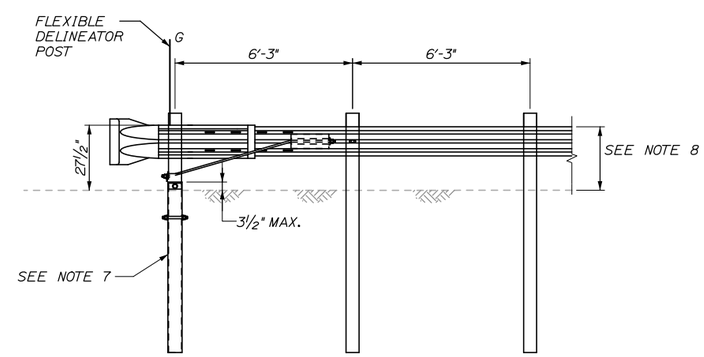

TERMINAL END - ANCHORED END (ITEM 606.278)

3/8" = 1'-0"

Date:8/17/2015

Filename: 025_GR_EndTreatmentDetails.dgn

Scale: AS NOTED			
No.	Revision	By	Date

Designed by: HNTB

CONSULTANT PROJECT MANAGER: R. Bruce Munger, P.E.

	By	Date		By	Date
Designed	CDH	08/15	Checked	CDH	08/15
Drawn	PDB	08/15	In Charge of	RAL	08/15

HNTB CORPORATION
340 County Road, Suite 6-C
Westbrook, ME 04092
TEL (207) 774-5155
FAX (207) 228-0909

MAINE TURNPIKE

THE GOLD STAR MEMORIAL HIGHWAY

MTA PROJECT MANAGER: William Yates

INTERCHANGE 53
TOLL PLAZA REPLACEMENT

GUARDRAIL END TREATMENT DETAILS

SHEET NUMBER: GD-01

CONTRACT:2015.09

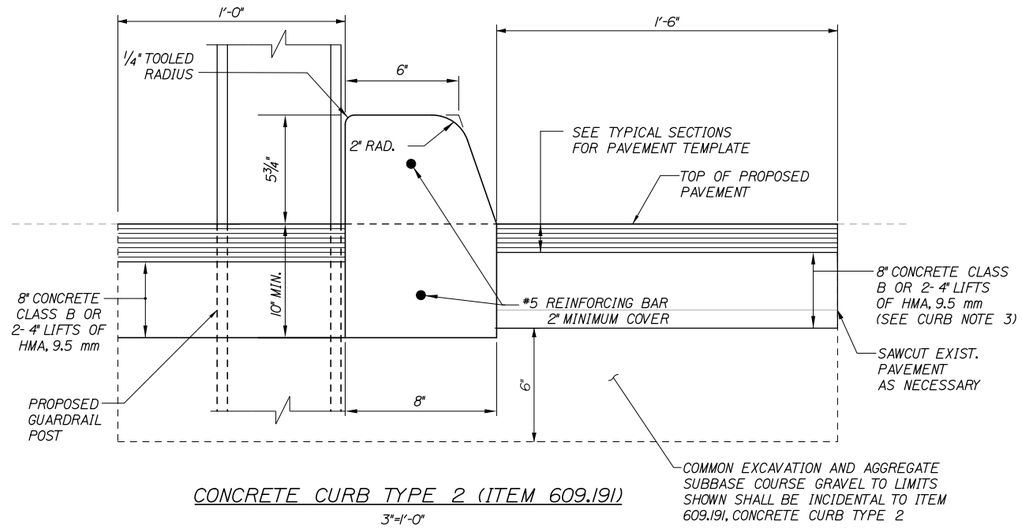

CONCRETE CURB TYPE 2 (ITEM 609.191)

3"=1'-0"

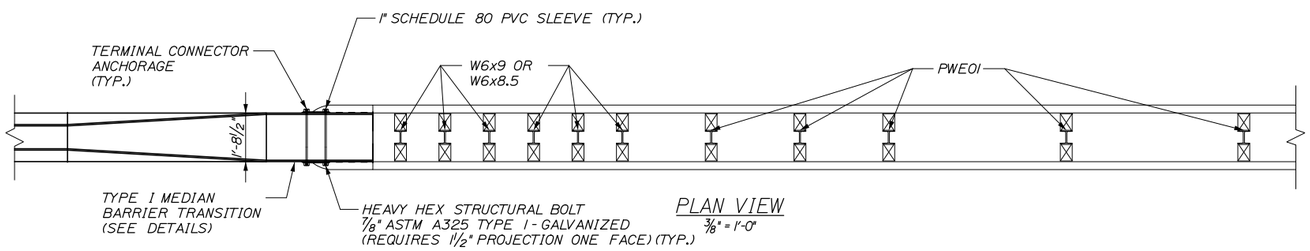

PLAN VIEW

3/8" = 1'-0"

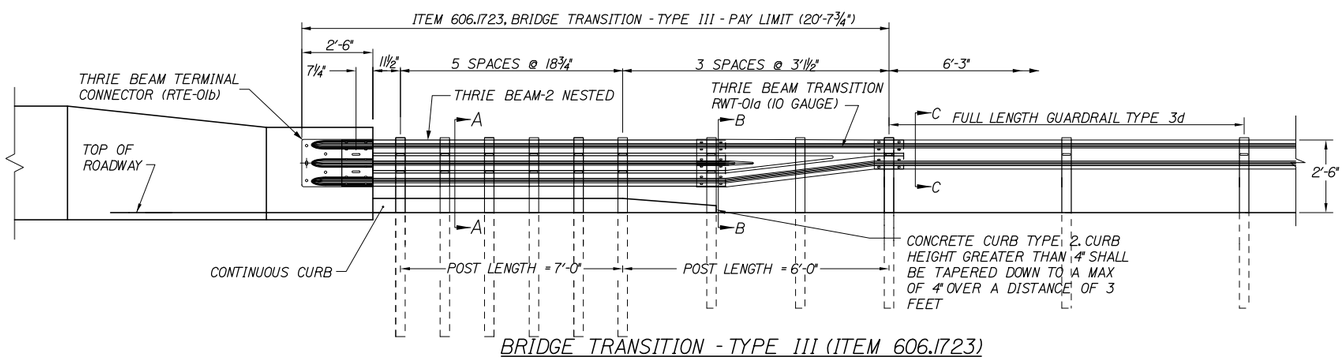

BRIDGE TRANSITION - TYPE III (ITEM 606.1723)

3/8" = 1'-0"

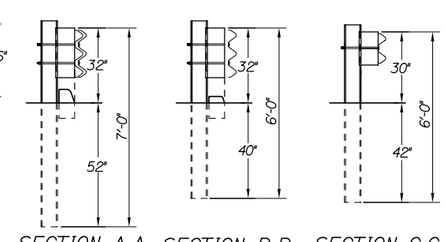

SECTION A-A SECTION B-B SECTION C-C

CONCRETE

CURB NOTES:

1. CURBING SHALL BE EITHER PRECAST CONCRETE, CAST-IN-PLACE CONCRETE OR GRANITE TO MEET DIMENSIONS SHOWN ON THE PLANS. CURBING SHALL BE PAID UNDER ITEM 609.191 CONCRETE CURB TYPE 2.
2. CONCRETE CURBS USED IN CONJUNCTION WITH THRIE-BEAM BRIDGE ATTACHMENT SHALL BE TYPE 2, SEE DETAILS THIS SHEET. CONCRETE CURBS SHALL BE CONTINOUS WITHOUT DRAINAGE CUTS.
3. CURB TRANSITION SHALL BE INCLUDED FOR PAYMENT UNDER ITEM 609.191 CONCRETE CURB TYPE 2.
4. SAWCUTTING EXISTING PAVEMENT, CONCRETE FILL, AND PAVEMENT TO LIMITS SHOWN SHALL BE INCIDENTAL TO ITEM 609.191

GENERAL NOTES:

1. ADDITIONAL HOLES MAY BE MADE IN THE THRIE-BEAM PANELS BY DRILLING, PUNCHING, OR OTHER MEANS THAT PRODUCE A NEAT, CLEAN HOLE. BURNING HOLES WILL NOT BE ALLOWED.
2. THRIE BEAM SHALL BE PLACED WITH THE COMPOSITE BLOCKOUT FACE IN FRONT OF OR DIRECTLY ABOVE THE CURB FACE.
3. RAIL ELEMENT SHALL MEET ALL REQUIREMENTS OF AASHTO M-180 EXCEPT AS MODIFIED ON THE PLANS. THE THRIE BEAM TRANSITION TO W-BEAM SHALL BE OF THE SAME MATERIAL, BUT SHALL NOT BE LESS THAN 10 GAUGE.
4. AFTER INSTALLATION IS COMPLETE, UPSET THE THREAD ON THE ANCHOR BOLTS IN THREE PLACES AROUND EACH BOLT, AT THE JUNCTION OF THE NUT AND THE EXPOSED THREAD, WITH A CENTER PUNCH OR SIMILAR TOOL.
5. STANDARD BARRIER HARDWARE HAS BEEN USED TO DEVELOP THESE GUARDRAIL ATTACHMENTS. DESIGNATIONS PROVIDED IN PARENTHESIS RELATE TO STANDARD ELEMENTS DETAILED IN "A GUIDE TO STANDARDIZED BARRIER RAIL HARDWARE." 1979. AASHTO-AGC-ARTBA JOINT COOPERATE COMMITTEE.
6. 1" HOLE IN CONCRETE SHALL BE FORMED BY A METHOD APPROVED BY THE ENGINEER
7. FOR THE GUARDRAIL TRANSITION, SECTION C-C GUARDRAIL TYPE 3d EXISTING OR PROPOSED SHALL TAPER FROM 30" TO TOP OF POST AT TRANSITION TO 27" OVER 50' MIN.
8. THRIE BEAM BRIDGE ATTACHMENT SHALL HAVE 3" x 7/8" SLOTS AT THE FIRST BOLT CONNECTIONS ON THE BARRIER TRANSITION. THE THREADS ON THE BOLTS AT THE SLOTS SHALL BE UPSET AT THE JUNCTION OF THE NUT WITH A CENTER PUNCH OR SIMILAR TOOL.

Date:8/17/2015

Filename: 026_GR-BarrierTransitionDetails.dgn

Scale: AS NOTED

No.	Revision	By	Date

Designed by: HNTB

CONSULTANT PROJECT MANAGER: R. Bruce Munger, P.E.

	By	Date		By	Date
Designed	CDH	08/15	Checked	CDH	08/15
Drawn	PDB	08/15	In Charge of	RAL	08/15

HNTB CORPORATION
340 County Road, Suite 6-C
Westbrook, ME 04092
TEL (207) 774-5155
FAX (207) 228-0909

MAINE TURNPIKE

THE GOLD STAR MEMORIAL HIGHWAY

MTA PROJECT MANAGER: William Yates

INTERCHANGE 53
TOLL PLAZA REPLACEMENT

GUARDRAIL BRIDGE TRANSITION DETAILS

SHEET NUMBER: GD-02

CONTRACT:2015.09

DIMENSIONS FOR SLOPE OF 2:1

D	a (FT)	b (FT)	c (FT)	e (FT)	f (FT)	g (FT)	STONE DEPTH (FT)	STONE (CY)
12"	1.00	4.00	3.00	2.00	6.00	1.00	1.50	1.30
15"	1.00	4.50	3.37	2.25	6.75	1.63	1.50	1.70
18"	1.00	5.00	3.75	2.50	7.50	2.25	1.50	2.09
21"	1.00	5.50	4.13	2.75	8.25	2.88	1.50	2.58
24"	1.00	6.00	4.50	3.00	9.00	3.50	1.50	3.12
30"	1.00	7.00	5.25	3.50	10.50	4.75	1.50	4.33
36"	1.00	8.00	6.00	4.00	12.00	6.00	1.50	5.75
42"	1.00	9.00	6.75	4.50	13.50	7.25	1.50	7.37
48"	1.00	10.00	7.50	5.00	15.00	8.50	1.50	9.18
54"	1.00	11.00	8.25	5.50	16.50	9.75	1.50	11.19
60"	1.00	12.00	9.00	6.00	18.00	11.00	1.50	13.40
66"	1.00	13.00	9.75	6.50	19.50	12.25	1.50	15.81
72"	1.00	14.00	10.50	7.00	21.00	13.50	1.50	18.41
84"	1.00	16.00	12.00	8.00	24.00	16.00	1.50	24.22

DIMENSIONS FOR SLOPE OF 4:1

D	a (FT)	b (FT)	c (FT)	e (FT)	f (FT)	g (FT)	STONE DEPTH (FT)	STONE (CY)
12"	1.00	8.00	6.00	2.00	6.00	0.00	1.50	2.20
15"	1.00	9.00	6.75	2.25	6.75	0.00	1.50	2.80
18"	1.00	10.00	7.50	2.50	7.50	0.00	1.50	3.40
21"	1.00	11.00	8.25	2.75	8.25	0.00	1.50	4.10
24"	1.00	12.00	9.00	3.00	9.00	0.00	1.50	4.86
30"	1.00	14.00	10.50	3.50	10.50	0.00	1.50	6.58
36"	1.00	16.00	12.00	4.00	12.00	0.00	1.50	8.56
42"	1.00	18.00	13.50	4.50	13.50	0.50	1.50	10.92
48"	1.00	20.00	15.00	5.00	15.00	1.00	1.50	13.57
54"	1.00	22.00	16.50	5.50	16.50	1.50	1.50	16.50
60"	1.00	24.00	18.00	6.00	18.00	2.00	1.50	19.72
66"	1.00	26.00	19.50	6.50	19.50	2.50	1.50	23.22
72"	1.00	28.00	21.00	7.00	21.00	3.00	1.50	27.01
84"	1.00	32.00	24.00	8.00	24.00	4.00	1.50	35.45

DIMENSIONS FOR SLOPE OF 6:1

D	a (FT)	b (FT)	c (FT)	e (FT)	f (FT)	g (FT)	STONE DEPTH (FT)	STONE (CY)
12"	0.50	9.00	7.50	1.50	4.50	0.00	1.50	2.30
15"	0.50	10.50	8.75	1.75	5.50	0.00	1.50	2.93
18"	0.50	12.00	10.00	2.00	6.50	0.00	1.50	3.57
21"	0.50	13.50	11.25	2.25	7.25	0.00	1.50	4.46
24"	0.50	15.00	12.50	2.50	8.00	0.00	1.50	5.44
30"	0.50	18.00	15.00	3.00	9.50	0.00	1.50	7.71
36"	0.50	21.00	17.50	3.50	11.00	0.00	1.50	10.37
42"	0.50	24.00	20.00	4.00	12.50	0.00	1.50	13.42
48"	0.50	27.00	22.50	4.50	14.00	0.00	1.50	16.87
54"	0.50	30.00	25.00	5.00	15.50	0.00	1.50	20.70
60"	0.50	33.00	27.50	5.50	17.00	0.00	1.50	24.93
66"	0.50	36.00	30.00	6.00	18.50	0.00	1.50	29.55
72"	0.50	39.00	32.50	6.50	20.00	0.00	1.50	34.56
84"	0.50	45.00	37.50	7.50	23.00	0.00	1.50	45.76

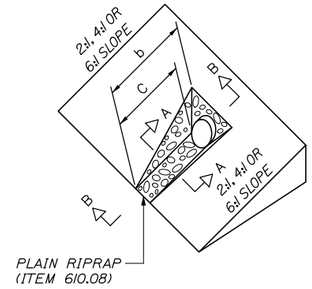

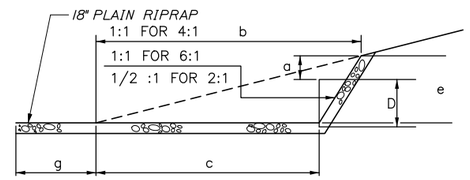

SECTION B-B

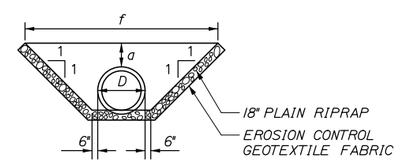

SECTION A-A

ROADWAY CULVERT END SLOPE TREATMENT

NOTES:

1. THE DIMENSIONS SHOWN ARE APPROXIMATE AND MAY BE MODIFIED BY THE ENGINEER.
2. STONE QUANTITIES ARE FOR ONE END OF THE PIPE.

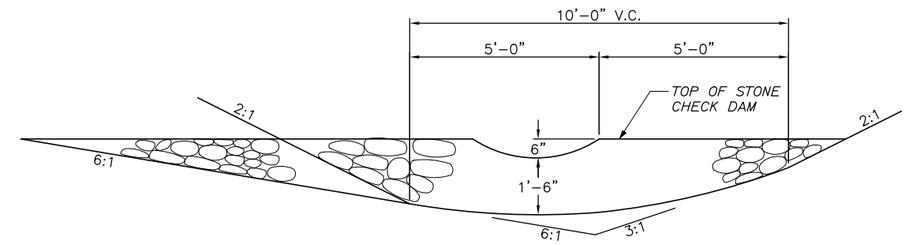

SECTION

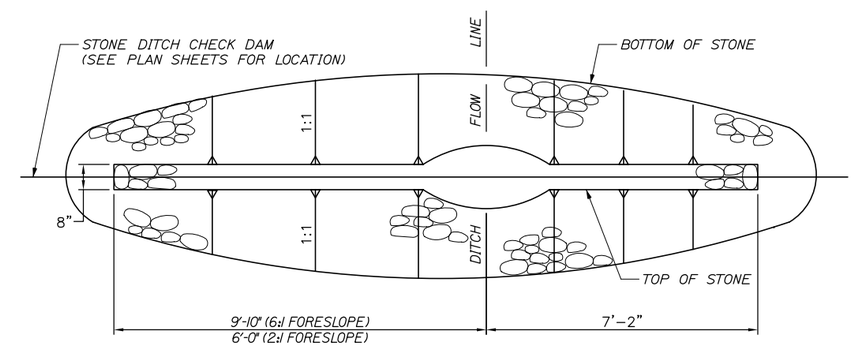

PLAN

STONE CHECK DAM

1" = 2-0"

FORESLOPE	BACKSLOPE	QUANTITY C.Y. STONE
6:1	3:1	2.5
2:1	3:1	2.0

NOTES:

1. STONE FOR TEMPORARY AND PERMANENT STONE CHECK DAMS SHALL MEET THE REQUIREMENTS OF MDOT SPECIFICATION 703.29, STONE DITCH PROTECTION.
2. TEMPORARY STONE CHECK DAMS WILL BE PAID FOR UNDER ITEM 610.181.
3. PERMANENT STONE CHECK DAMS WILL BE PAID FOR UNDER ITEM 610.182.

Date:8/17/2015

Filename: 027_Erosion_Con_Det1.dgn

Scale: AS NOTED

No.	Revision	By	Date

Designed by: HNTB

CONSULTANT PROJECT MANAGER: R. Bruce Munger, P.E.

	By	Date		By	Date
Designed	CDH	08/15	Checked	CDH	08/15
Drawn	HME	08/15	In Charge of	RAL	08/15

HNTB CORPORATION
340 County Road, Suite 6-C
Westbrook, ME 04092
TEL (207) 774-5155
FAX (207) 228-0909

MAINE TURNPIKE

THE GOLD STAR MEMORIAL HIGHWAY

MTA PROJECT MANAGER: William Yates

INTERCHANGE 53
TOLL PLAZA REPLACEMENT

EROSION CONTROL DETAILS

SHEET NUMBER: ED-01

CONTRACT:2015.09

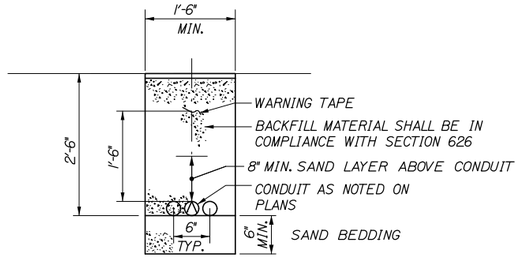

TRENCH CROSS SECTION

NTS

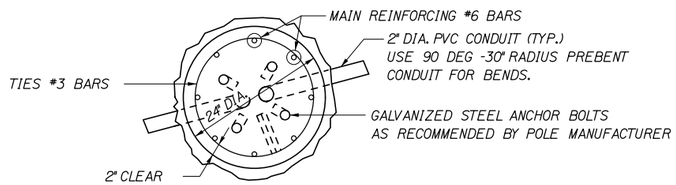

SECTION A-A

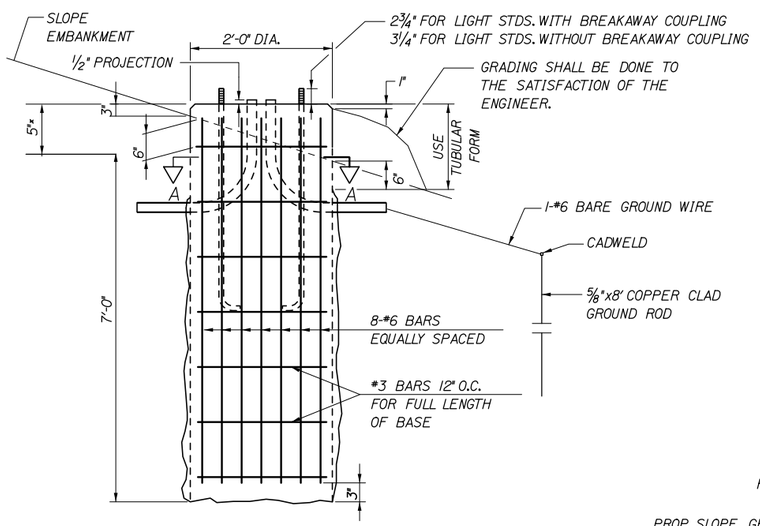

24 INCH FOUNDATION

NTS

NOTE:
WHERE SOLID ROCK IS ENCOUNTERED AT LESS THAN THE REQUIRED DISTANCE BELOW GROUND LEVEL, REINFORCING STEEL SHALL BE DOWELED INTO LEDGE AS SHOWN ON MAINE DOT STANDARD DETAIL 626(06). PAYMENT SHALL BE INCIDENTAL TO THE FOUNDATION PAY ITEM.

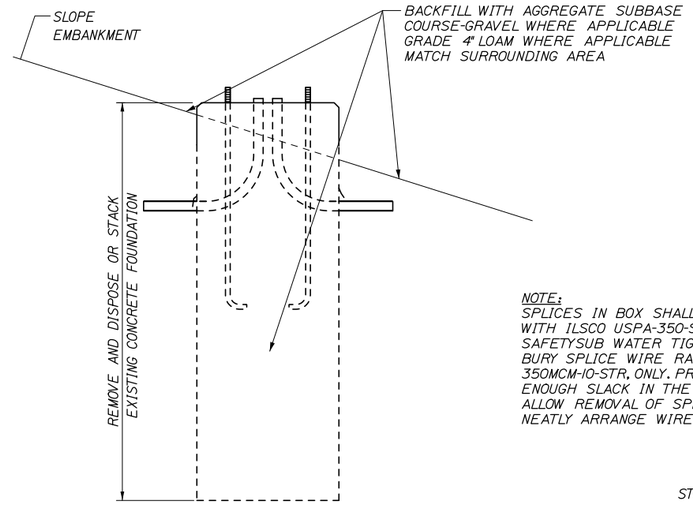

REMOVAL OF CONCRETE FOUNDATION

NTS

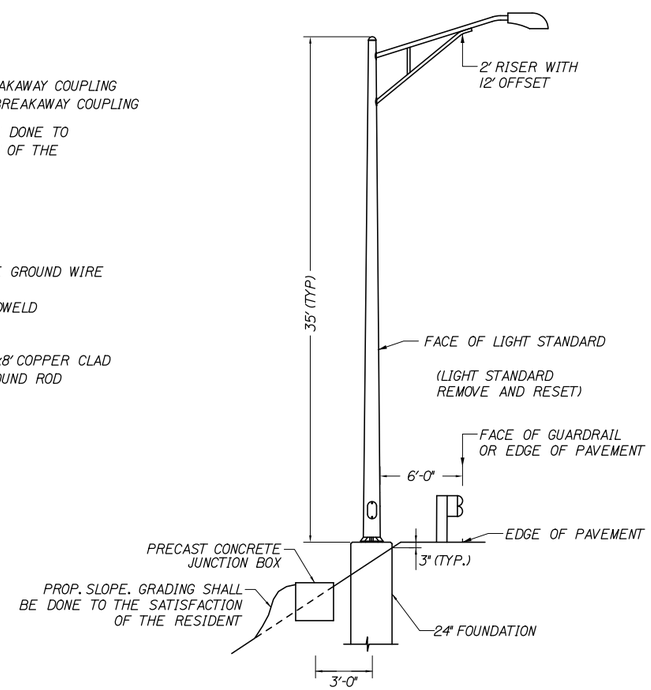

PLACEMENT OF LIGHT STANDARD

NTS

NOTE:
SPLICES IN BOX SHALL BE MADE WITH ILSCO USPA-350-SS-DB SAFETYSUB WATER TIGHT DIRECT BURY SPLICE WIRE RANGE 350MCM-10-STR. ONLY. PROVIDE ENOUGH SLACK IN THE WIRE TO ALLOW REMOVAL OF SPLICES AND NEATLY ARRANGE WIRE IN BOX.

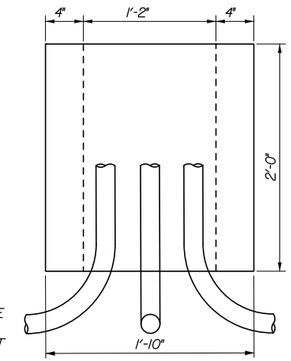

ELEVATION

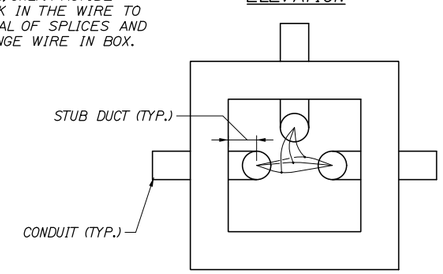

TOP

PRECAST CONCRETE JUNCTION BOX

NTS

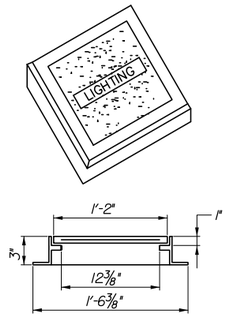

ELECTRICAL PULL BOX COVER

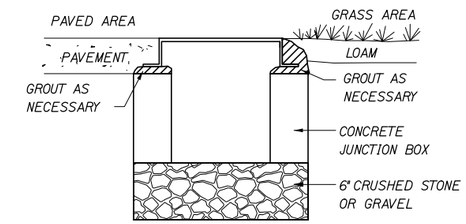

JUNCTION BOX COVER & FRAME

NOTE:
INSTALL JUNCTION BOXES ON GRADE, GROUT AS NECESSARY AS SHOWN ABOVE.

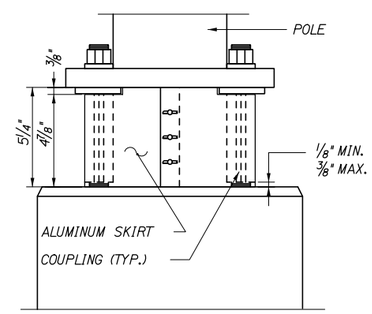

BREAKAWAY COUPLINGS AND SKIRT DETAIL *

NTS

* BREAKAWAY COUPLINGS SHALL BE REQUIRED ON ALL NEW LIGHT STANDARDS

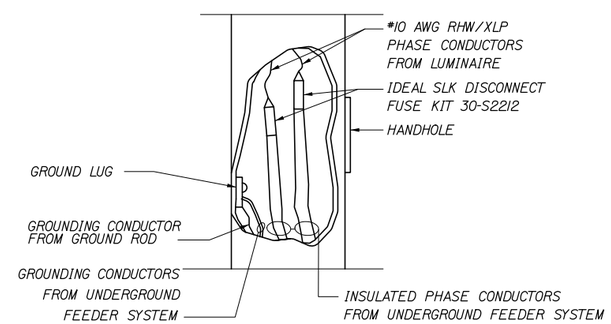

*SEE ELECTRICAL PLANS FOR WIRE SIZES

TYPICAL POLE WIRING DETAIL

NTS

Date:8/17/2015

Filename: 028_LightingDets.dgn

Scale: AS NOTED

No.	Revision	By	Date

Designed by: HNTB

CONSULTANT PROJECT MANAGER: R. Bruce Munger, P.E.

	By	Date		By	Date
Designed	CDH	08/15	Checked	CDH	08/15
Drawn	PMK	08/15	In Charge of	RAL	08/15

HNTB CORPORATION
340 County Road, Suite 6-C
Westbrook, ME 04092
TEL (207) 774-5155
FAX (207) 228-0909

MAINE TURNPIKE

THE GOLD STAR MEMORIAL HIGHWAY

MTA PROJECT MANAGER: William Yates

INTERCHANGE 53
TOLL PLAZA REPLACEMENT

LIGHTING DETAILS

SHEET NUMBER: LD-01

CONTRACT:2015.09

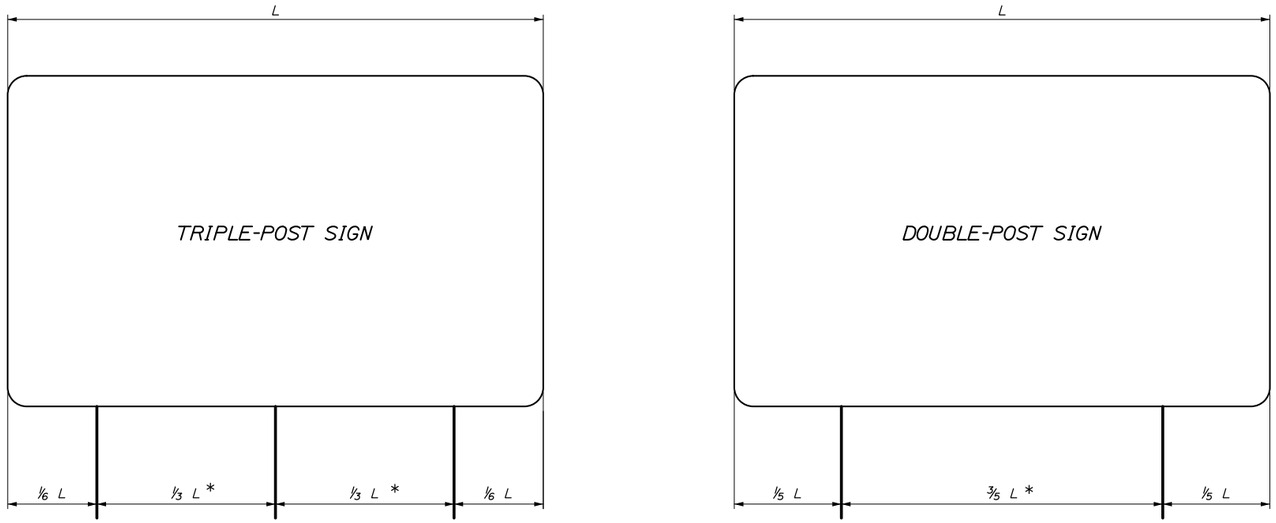

POLE SPACING DETAIL

N.T.S.

* - A MINIMUM 7 FEET REQUIRED WHEN INSTALLED ON BREAKAWAY DEVICES

SINGLE SUPPORT SIGNS								
FOUNDATION DIAMETER	SIGN AREA (A)	SIGN WIDTH (W)	POST SIZE	BASE PLATE (1) (3)	MATERIAL	ANCHOR BOLTS (2)	BOLT CIRCLE	MAXIMUM MOUNTING HEIGHT
	$A < 4\ FT^2$		U CHANNEL POST					12 FEET TO SIGN CENTER
	$4 < A <= 10\ FT^2$		WOOD POST 6"X6"					
18"	$10 < A <= 16\ FT^2$	W=4'-0" MAX. BUT INCLUDES 5'-0" YIELD SIGN	W6X9	12"X12"X1" 41 LBS.	A36	1" ϕ X 3'-0"	12"	
18"	$16 < A <= 25\ FT^2$	W=5'-0" MAX	W6X15	12"X12"X1" 41 LBS.	A36	1" ϕ X 3'-0"	12"	
24"	$25 < A <= 42\ FT^2$	W=7'-0" MAX	W8X24	14"X14"X1" 55 LBS.	A36	1 1/4" ϕ X 3'-6"	14"	

MULTIPLE SUPPORT SIGNS								
24"	TO 60 FT /POST^2		W8X18	14"X14"X1" 55 LBS.	A36	1 1/4" ϕ X 3'-6"	14"	20 FEET TO SIGN CENTER
24"	60-85 FT /POST^2		W10X22	12"X17"X1 1/4" 72 LBS.	A36	1 1/4" ϕ X 3'-6"	15"	
30"	85-110 FT /POST^2		W12X26	13"X19"X1 1/4" 87 LBS.	A36	1 1/2" ϕ X 4'-0"	15"	
30"	110-135 FT /POST^2		W14X30	14"X21"X1 1/4" 104 LBS.	A36	1 1/2" ϕ X 4'-0"	19"	

GENERAL NOTES

1. BOLTS TO BE 50,000 PSI MINIMUM YIELD STRENGTH.
2. POST TO BASE PLATE WELD SHALL BE 5/16" FILLET WELD.
3. BASE PLATES AND H-BEAMS SHALL BE HOT DIPPED GALVANIZED AFTER FABRICATION IN ACCORDANCE WITH SECTION 720.06.

BREAKAWAY NOTES

1. ON 6"X6" WOOD POSTS, DRILL 3/4" DIAMETER HOLES AT RIGHT ANGLES TO ONE ANOTHER 4" ABOVE GROUND LEVEL TO MEET BREAKAWAY STANDARDS.
2. ON BREAKAWAY SUPPORTS, THE HINGE SHOULD BE A MINIMUM OF 7' ABOVE THE FOUNDATION. NO PERMANENT SUPPLEMENTARY SIGNS SHALL BE ATTACHED BELOW THE HINGE.
3. A SINGLE POSTED SIGN REQUIRING A BREAKAWAY DEVICE SHALL NOT HAVE A HINGE.

REMOVE AND RESET GUIDE SIGN NOTES

1. EXISTING SIGN POST LENGTHS ARE APPROXIMATE AND SHALL BE FIELD VERIFIED BY THE CONTRACTOR IF THE POSTS ARE TO BE REUSED.
2. THE CONTRACTOR MAY REUSE EXISTING POLES, FOUNDATIONS AND BREAKAWAY DEVICES AT ANY SIGN LOCATION WHERE FEASIBLE.
3. PROPOSED POLE LENGTHS ARE MEASURED FROM THE TOP OF THE FOUNDATION TO THE TOP OF SIGN AND ARE APPROXIMATE. FINAL POST LENGTHS SHALL BE DETERMINED BY THE CONTRACTOR ONCE FOUNDATIONS ARE PLACED.

Date:8/17/2015

Filename: 029_Exit53_Signing-Details.dgn

Scale: AS NOTED

No.	Revision	By	Date

Designed by: HNTB

CONSULTANT PROJECT MANAGER: R. Bruce Munger, P.E.

	By	Date		By	Date
Designed	CDH	08/15	Checked	CDH	08/15
Drawn	PMK	08/15	In Charge of	RAL	08/15

HNTB CORPORATION
340 County Road, Suite 6-C
Westbrook, ME 04092
TEL (207) 774-5155
FAX (207) 228-0909

MAINE TURNPIKE

THE GOLD STAR MEMORIAL HIGHWAY

MTA PROJECT MANAGER: William Yates

INTERCHANGE 53
TOLL PLAZA REPLACEMENT

SIGNING DETAILS

SHEET NUMBER: SDET-01

CONTRACT:2015.09

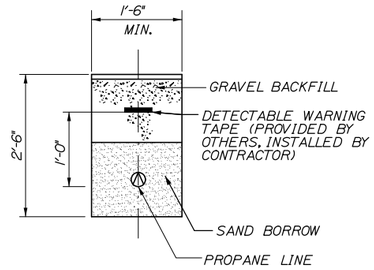

PROPANE SERVICE DETAIL

NTS

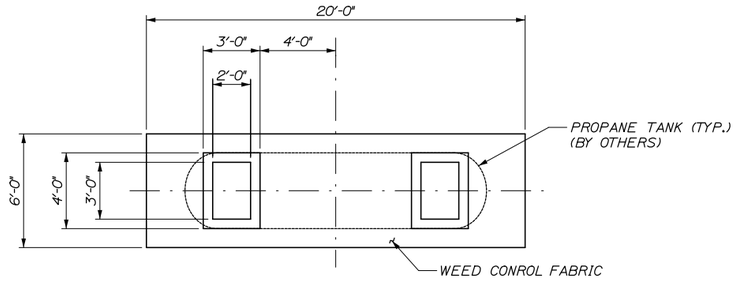

PLAN VIEW

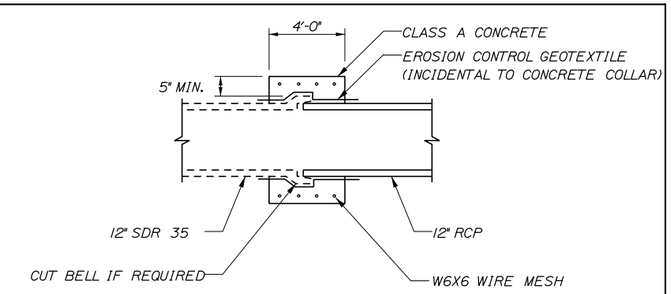

CONCRETE COLLAR FOR UNMATCHED DRAINAGE PIPES

NTS

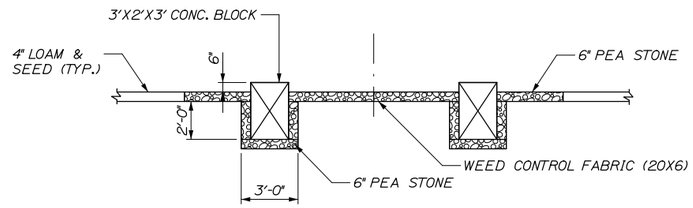

ELEVATION VIEW
PROPANE TANK PAD

NTS

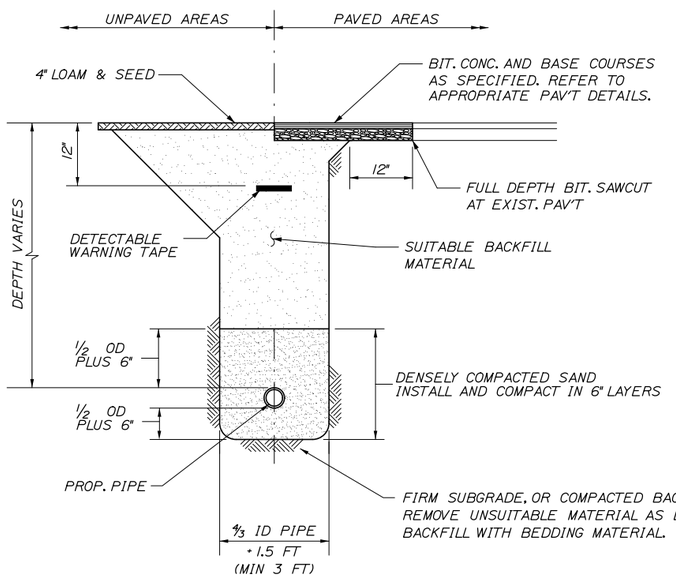

STANDARD PIPE/CONDUIT TRENCH DETAIL

NTS

STANDARD PIPE/CONDUIT TRENCH NOTES:

1. BEDDING SHALL BE COMPATCTED TO A MINIMUM 95% STANDARD PROCTOR DENSITY. USE HAND TAMPERS OR VIBRATORY COMPACTORS.
2. FILTER FABRIC SHALL BE INSTALLED AGAINST THE TRENCH WALLS IN THE HAUNCHING AND BEDDING ZONES WHEN FINE SANDS, SILT, CLAY, OR ORGANIC MATERIALS ARE ENCOUNTERED AT THE TRENCH BOTTOM.
3. CONTRACTOR SHALL SHORE TRENCH SIDES WHEN REQUIRED OR AS DIRECTED BY THE RESIDENT.

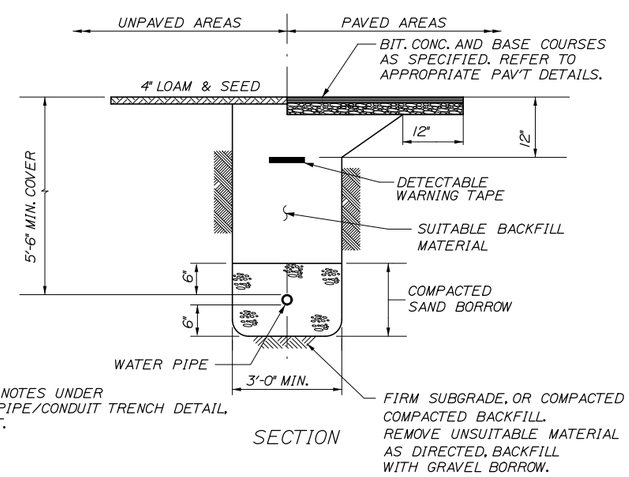

SECTION

WATER SERVICE DETAIL

NTS

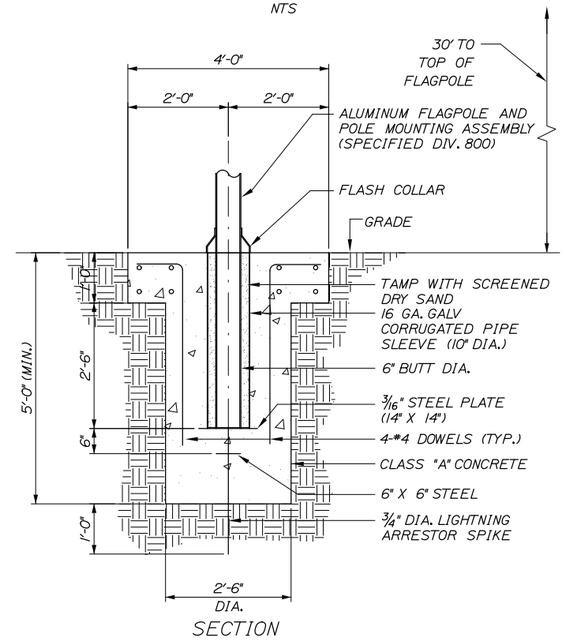

SECTION

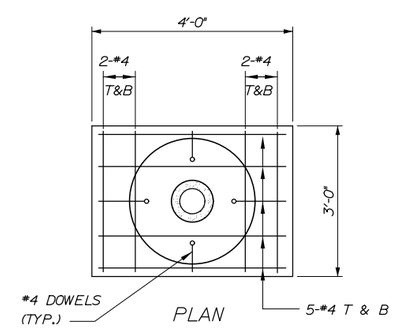

PLAN

FLAGPOLE FOUNDATION DETAILS

1" = 2'-0"

Date:8/17/2015

Filename: 030_MiscDets.dgn

Scale: AS NOTED			
No.	Revision	By	Date

Designed by: HNTB

CONSULTANT PROJECT MANAGER: R. Bruce Munger, P.E.

	By	Date		By	Date
Designed	CDH	08/15	Checked	CHD	08/15
Drawn	PMK	08/15	In Charge of	RAL	08/15

HNTB CORPORATION
340 County Road, Suite 6-C
Westbrook, ME 04092
TEL (207) 774-5155
FAX (207) 228-0909

MAINE TURNPIKE

THE GOLD STAR MEMORIAL HIGHWAY

MTA PROJECT MANAGER: William Yates

INTERCHANGE 53
TOLL PLAZA REPLACEMENT

MISCELLANEOUS DETAILS

SHEET NUMBER: MD-01

CONTRACT:2015.09

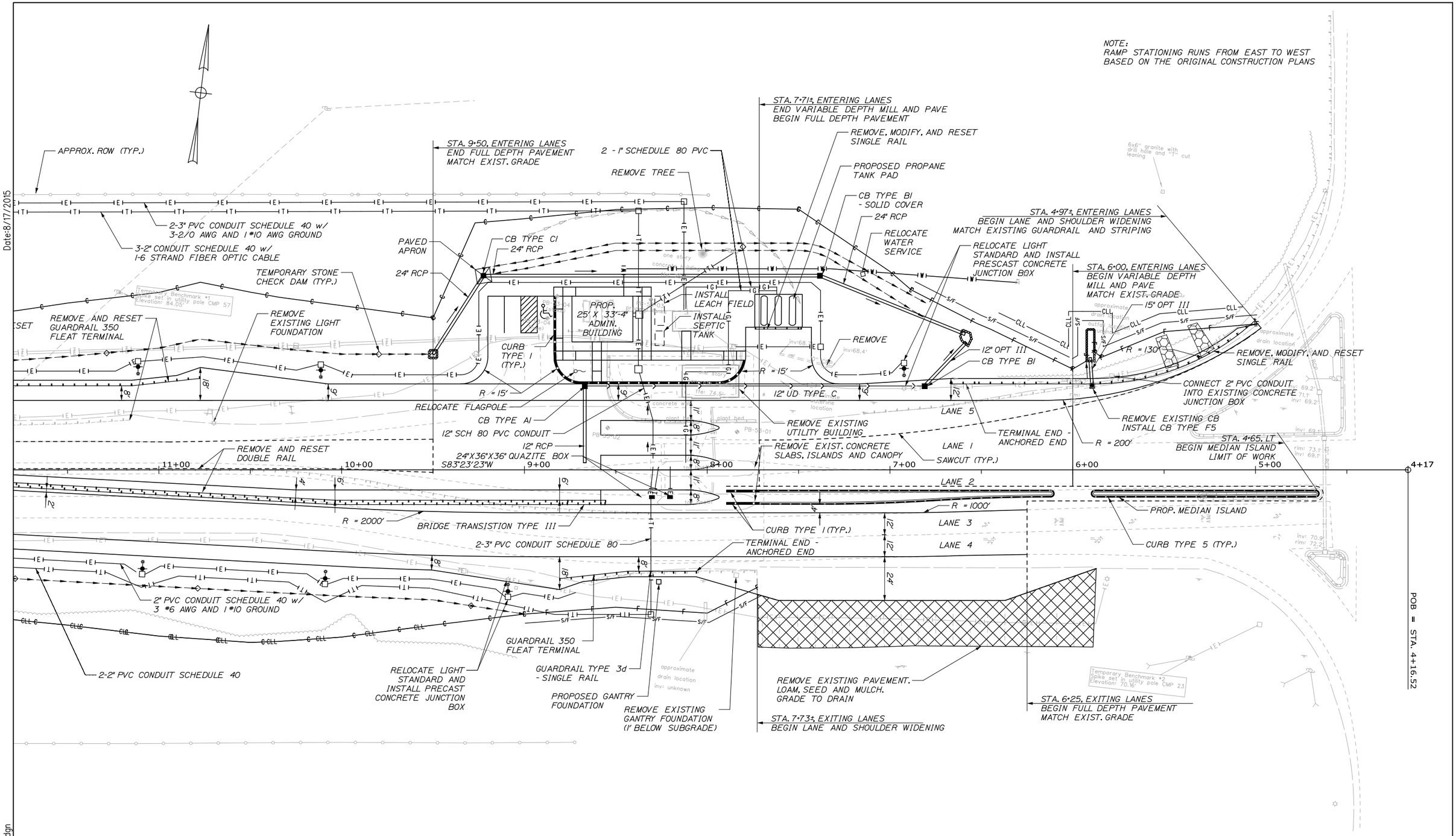

Scale: 25 0 25 50

No.	Revision	By	Date

Designed by:

HNTB

CONSULTANT PROJECT MANAGER: R. Bruce Munger, P.E.

	By	Date		By	Date
Designed	CDH	08/15	Checked	CDH	08/15
Drawn	TJW	08/15	In Charge of	RAL	08/15

HNTB CORPORATION
340 County Road, Suite 6-C
Westbrook, ME 04092
TEL (207) 774-5155
FAX (207) 228-0909

MAINE TURNPIKE

THE GOLD STAR MEMORIAL HIGHWAY

MTA PROJECT MANAGER: William Yates

INTERCHANGE 53 TOLL PLAZA REPLACEMENT

GENERAL PLAN 1

SHEET NUMBER: GP-01

CONTRACT:2015.09

Filename: 031_Exit53_HDPlan01.dgn

ITEM 606.1723 BRIDGE TRANSITION TYPE III	EA
STA. 8+55.75, LT.	2

ITEM 606.24 GUARDRAIL TYPE 3D - SINGLE RAIL	LF
STA. 8+18.51, LT. TO STA. 8+43.51, LT.	25

ITEM 606.265 TERMINAL END - SINGLE RAIL	EA
STA. 7+48.45, RT.	1
STA. 7+73.45, RT.	1

ITEM 606.278 TERMINAL END - ANCHORED END	EA
STA. 6+53.58, RT.	1
STA. 8+06.01, LT.	1
STA. 15+32.85, RT.	1

ITEM 606.3605 GUARDRAIL REMOVE MODIFY AND RESET, SINGLE RAIL	LF
STA. 4+99.99, RT. TO STA. 6+53.58, RT.	162.5
STA. 7+48.45, RT. TO STA. 7+73.45, RT.	25

ITEM 606.36051 GUARDRAIL REMOVE AND RESET, SINGLE RAIL	LF
STA. 11+14.82, RT. TO STA. 15+32.85, RT.	425

ITEM 606.36061 GUARDRAIL REMOVE AND RESET, DOUBLE RAIL	LF
STA. 8+76.40, LT. TO STA. 13+25.95, LT.	450

ITEM 606.80 GUARDRAIL 350 FLEAT TERMINAL	EA
STA. 8+43.51, LT.	1

ITEM 606.81 GUARDRAIL 350 FLEAT TERMINAL - REMOVE AND RESET	EA
STA. 10+77.54, RT.	1

ITEM 610.08 PLAIN RIPRAP	CY
STA. 5+22.51, RT.	8
STA. 5+54.56, RT.	7
STA. 5+92.27, RT.	4
STA. 6+61.75, RT.	2
STA. 9+52.00, RT.	1

ITEM 620.58 EROSION CONTROL GEOTEXTILE	SY
STA. 5+22.51, RT.	16
STA. 5+54.56, RT.	15
STA. 5+92.27, RT.	9
STA. 6+61.75, RT.	4
STA. 9+52.00, RT.	2

ITEM 656.632 30" TEMPORARY SILT FENCE	LF
STA. 5+00.00, RT TO STA. 6+70.00, RT	235
STA. 7+70.50, LT TO STA. 9+00.00, LT	140
STA. 14+00.00, RT TO STA. 15+30.00, RT	135

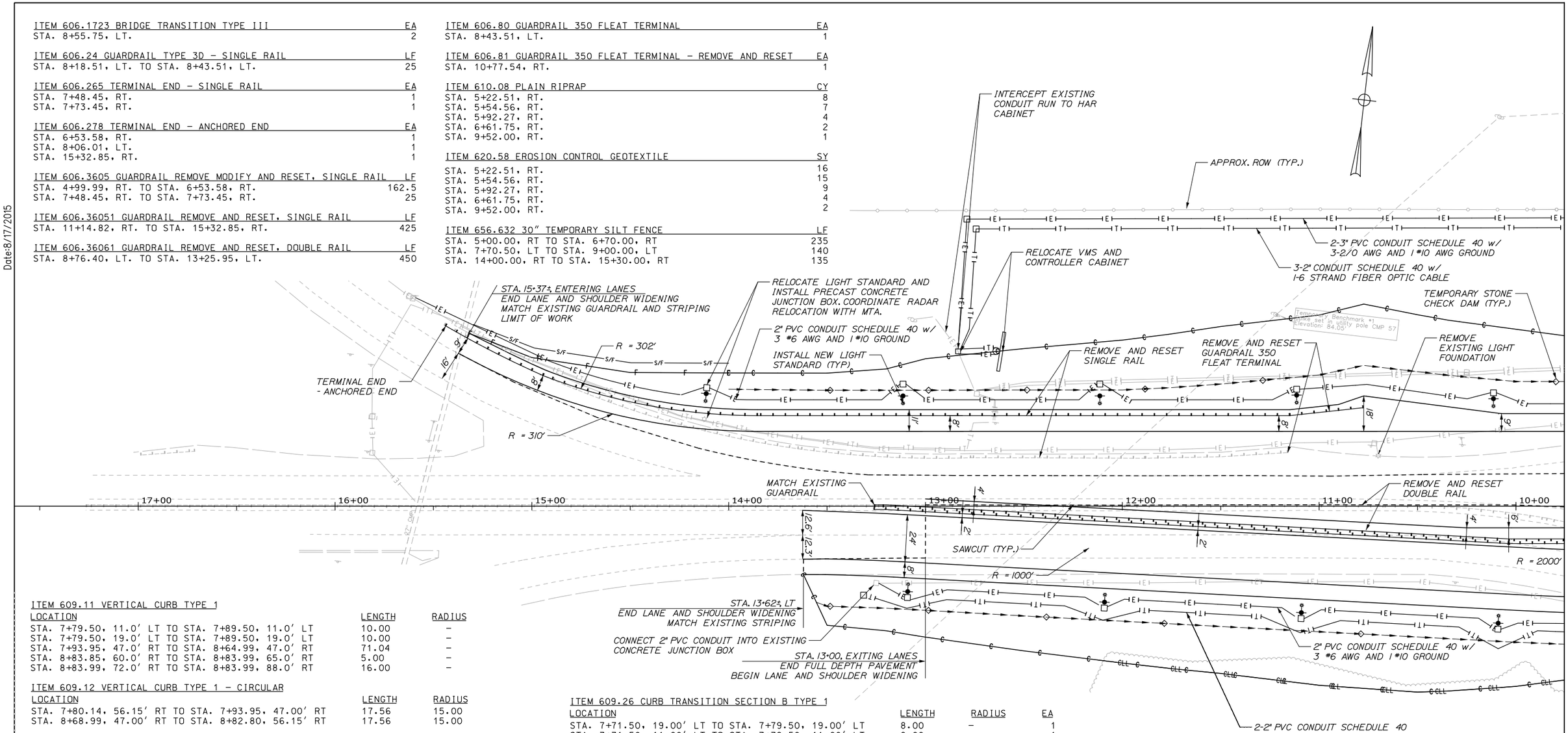

ITEM 609.11 VERTICAL CURB TYPE 1		
LOCATION	LENGTH	RADIUS
STA. 7+79.50, 11.0' LT TO STA. 7+89.50, 11.0' LT	10.00	-
STA. 7+79.50, 19.0' LT TO STA. 7+89.50, 19.0' LT	10.00	-
STA. 7+93.95, 47.0' RT TO STA. 8+64.99, 47.0' RT	71.04	-
STA. 8+83.85, 60.0' RT TO STA. 8+83.99, 65.0' RT	5.00	-
STA. 8+83.99, 72.0' RT TO STA. 8+83.99, 88.0' RT	16.00	-

ITEM 609.12 VERTICAL CURB TYPE 1 - CIRCULAR		
LOCATION	LENGTH	RADIUS
STA. 7+80.14, 56.15' RT TO STA. 7+93.95, 47.00' RT	17.56	15.00
STA. 8+68.99, 47.00' RT TO STA. 8+82.80, 56.15' RT	17.56	15.00

ITEM 609.191 CONCRETE CURB - TYPE II		
LOCATION	LENGTH	RADIUS
STA. 8+55.00, TO STA. 8+70.00	15.00	-
STA. 8+55.00, TO STA. 8+70.00	15.00	-

ITEM 609.234 TERMINAL CURB TYPE 1 - 4'			
LOCATION	LENGTH	RADIUS	EA
STA. 7+79.08, 60.00' RT TO STA. 7+80.14, 56.15' RT	4.00	15.00	1
STA. 8+82.80, 56.15' RT TO STA. 8+83.85, 60.00' RT	4.00	15.00	1

ITEM 609.237 TERMINAL CURB TYPE 1 - 7'			
LOCATION	LENGTH	RADIUS	EA
STA. 8+83.99, 72.00' RT TO STA. 8+83.99, 65.00' RT	7.00	-	1
STA. 8+83.99, 88.00' RT TO STA. 8+83.99, 95.00' RT	7.00	-	1

ITEM 609.26 CURB TRANSITION SECTION B TYPE 1			
LOCATION	LENGTH	RADIUS	EA
STA. 7+71.50, 19.00' LT TO STA. 7+79.50, 19.00' LT	8.00	-	1
STA. 7+71.50, 11.00' LT TO STA. 7+79.50, 11.00' LT	8.00	-	1

ITEM 609.34 CURB TYPE 5		
LOCATION	LENGTH	RADIUS
STA. 4+67.00, 11.00' LT TO STA. 5+88.00,11.00' LT	121.00	-
STA. 4+67.00, 15.00' LT TO STA. 5+88.00,15.00' LT	121.00	-
STA. 6+12.00, 11.00' LT TO STA. 7+71.50, 11.00' LT	159.50	-
STA. 6+12.00, 15.00' LT TO STA. 6+75.66, 17.02' LT	63.71	1004.5
STA. 6+75.66, 17.02' LT TO STA. 7+38.43, 19.00' LT	62.81	995.5
STA. 7+38.43, 19.00' LT TO STA. 7+71.50, 19.00' LT	33.07	-

ITEM 609.35 CURB TYPE 5 - CIRCULAR		
LOCATION	LENGTH	RADIUS
STA. 4+67.00, 15.00' LT TO STA. 4+67.00, 11.00' LT	6.28	2.00
STA. 5+88.00, 15.00' LT TO STA. 5+88.00, 11.00' LT	6.28	2.00
STA. 6+12.00, 15.00' LT TO STA. 6+12.00, 11.00' LT	6.28	2.00

Scale: 25 0 25 50

No.	Revision	By	Date

Designed by: HNTB

CONSULTANT PROJECT MANAGER: R. Bruce Munger, P.E.

	By	Date		By	Date
Designed	CDH	08/15	Checked	CDH	08/15
Drawn	TJW	08/15	In Charge of	RAL	08/15

HNTB CORPORATION
340 County Road, Suite 6-C
Westbrook, ME 04092
TEL (207) 774-5155
FAX (207) 228-0909

MAINE TURNPIKE

THE GOLD STAR MEMORIAL HIGHWAY

MTA PROJECT MANAGER: William Yates

INTERCHANGE 53
TOLL PLAZA REPLACEMENT

GENERAL PLAN 2

SHEET NUMBER: GP-02

CONTRACT:2015.09

Date:8/17/2015
Filename: 032_Exit53_HDPlan02.dgn

Date:8/17/2015

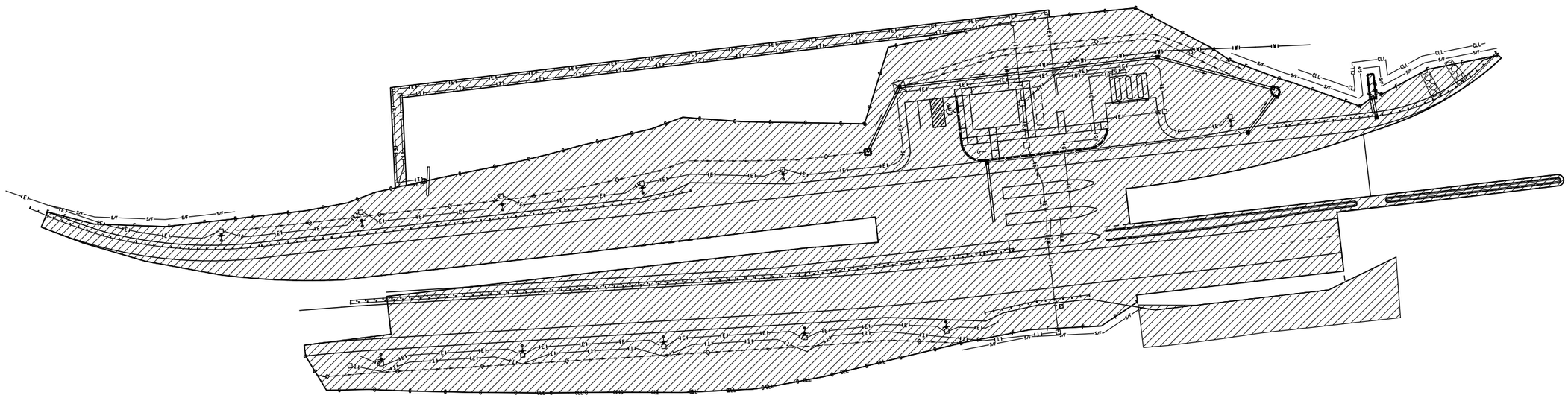

NOTES:

1. EROSION AND SEDIMENTATION CONTROL DEVICES REQUIRED FOR THE CONTRACTOR'S ACCESS LOCATIONS AND STORAGE AREAS WILL NOT BE MEASURED FOR PAYMENT.
2. SEE SPECIFICATIONS FOR CONTRACTOR'S SUBMITTAL REQUIREMENTS IF ADDING ADDITIONAL LIMITS OF DISTURBANCE TO THE PROJECT ESTIMATED QUANTITIES.
3. AN ADDITIONAL 0.5 ACRES HAS BEEN ESTIMATED FOR CONTRACTOR ACCESS LOCATIONS AND STORAGE AREAS.

LEGEND

LIMIT OF DISTURBANCE 3.16 ACRES

CONTRACTOR'S LIMIT OF DISTURBANCE AREA ESTIMATED AT 0.5 ACRES: SEE NOTE 3

Scale: 40 0 40 80 Scale of Feet

No.	Revision	By	Date

Designed by: HNTB

CONSULTANT PROJECT MANAGER: R. Bruce Munger, P.E.

	By	Date		By	Date
Designed	CDH	08/15	Checked	CDH	08/15
Drawn	SLR	08/15	In Charge of	RAL	08/15

HNTB CORPORATION
340 County Road, Suite 6-C
Westbrook, ME 04092
TEL (207) 774-5155
FAX (207) 228-0909

MAINE TURNPIKE

THE GOLD STAR MEMORIAL HIGHWAY

MTA PROJECT MANAGER: William Yates

INTERCHANGE 53
TOLL PLAZA REPLACEMENT

LIMIT OF DISTURBANCE PLAN

SHEET NUMBER: LOD-01

CONTRACT:2015.09

Filename: 033_Exit3_LOD Plan.dgn

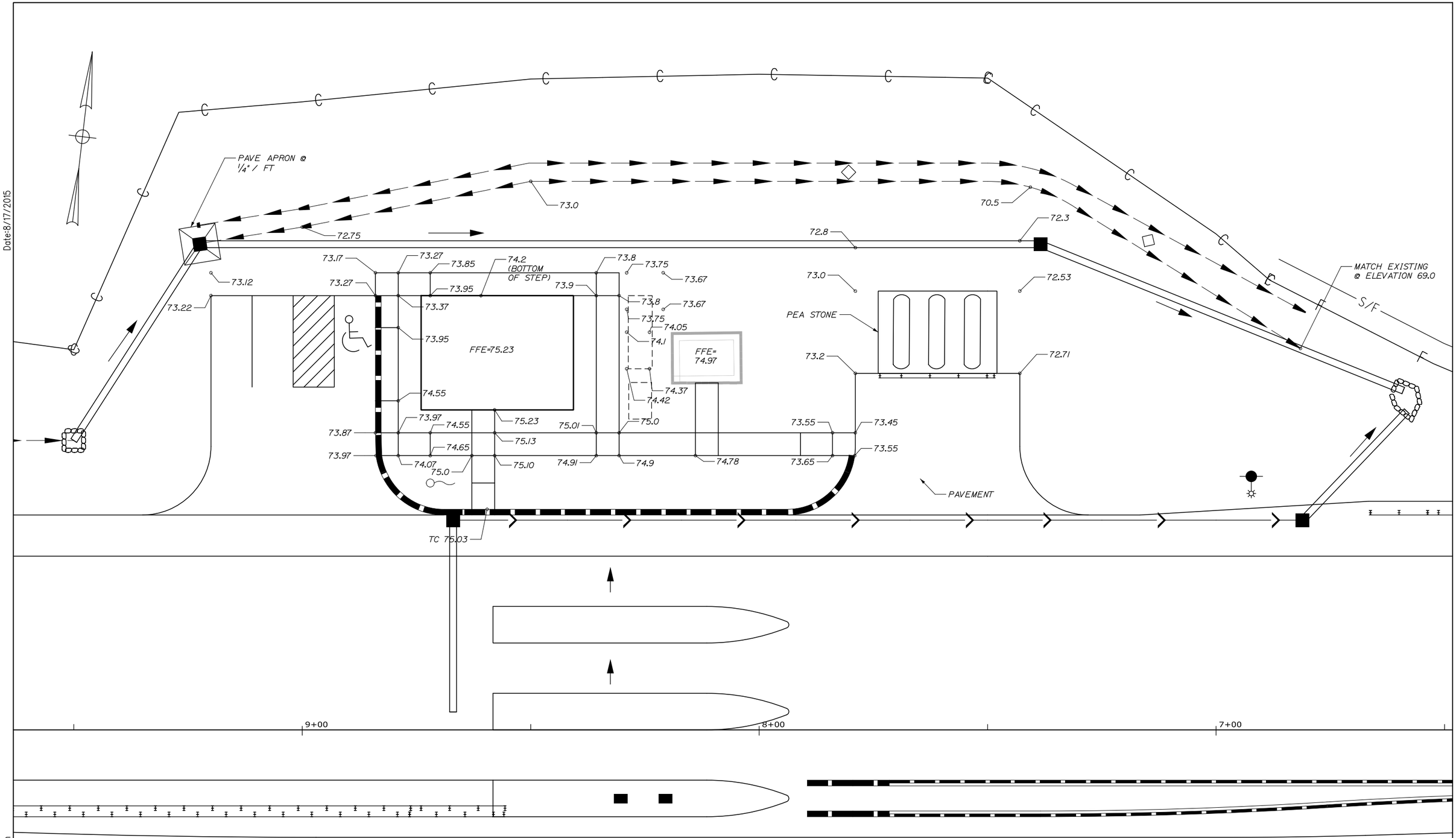

Date:8/17/2015

Filename: 034_Site_Grading.dgn

Scale:

No.	Revision	By	Date

Designed by:

HNTB

CONSULTANT PROJECT MANAGER: R. Bruce Munger, P.E.

	By	Date		By	Date
Designed	HME	08/15	Checked	CDH	08/15
Drawn	SLR	08/15	In Charge of	RAL	08/15

HNTB CORPORATION
340 County Road, Suite 6-C
Westbrook, ME 04092
TEL (207) 774-5155
FAX (207) 228-0909

MAINE TURNPIKE

THE GOLD STAR MEMORIAL HIGHWAY

MTA PROJECT MANAGER: William Yates

INTERCHANGE 53
TOLL PLAZA REPLACEMENT
ADMINISTRATION BUILDING

SITE GRADING PLAN

SHEET NUMBER: QT-1

CONTRACT:2015.09

Date:8/17/2015

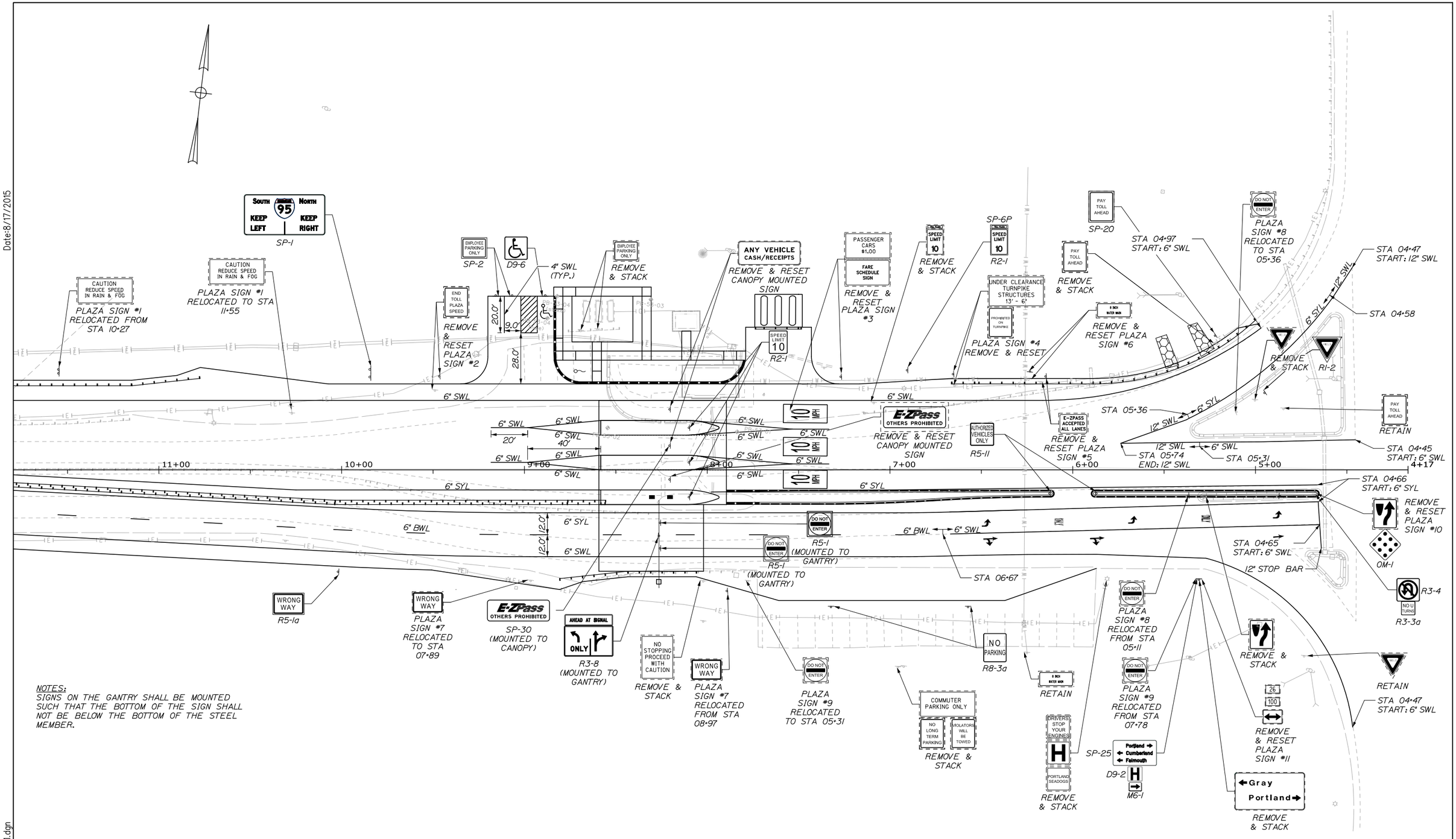

NOTES:
SIGNS ON THE GANTRY SHALL BE MOUNTED SUCH THAT THE BOTTOM OF THE SIGN SHALL NOT BE BELOW THE BOTTOM OF THE STEEL MEMBER.

Filename: 035_Exit53_SSPlan01.dgn

Scale: 25 0 25 50

No.	Revision	By	Date

Designed by: HNTB

CONSULTANT PROJECT MANAGER: R. Bruce Munger, P.E.

	By	Date		By	Date
Designed	WA	08/15	Checked	EAR	08/15
Drawn	CP	08/15	In Charge of	RAL	08/15

HNTB CORPORATION
340 County Road, Suite 6-C
Westbrook, ME 04092
TEL (207) 774-5155
FAX (207) 228-0909

MAINE TURNPIKE

THE GOLD STAR MEMORIAL HIGHWAY

MTA PROJECT MANAGER: William Yates

INTERCHANGE 53 TOLL PLAZA REPLACEMENT

SIGNING AND STRIPING PLAN 1

SHEET NUMBER: SS-01

CONTRACT:2015.09

Date:8/17/2015

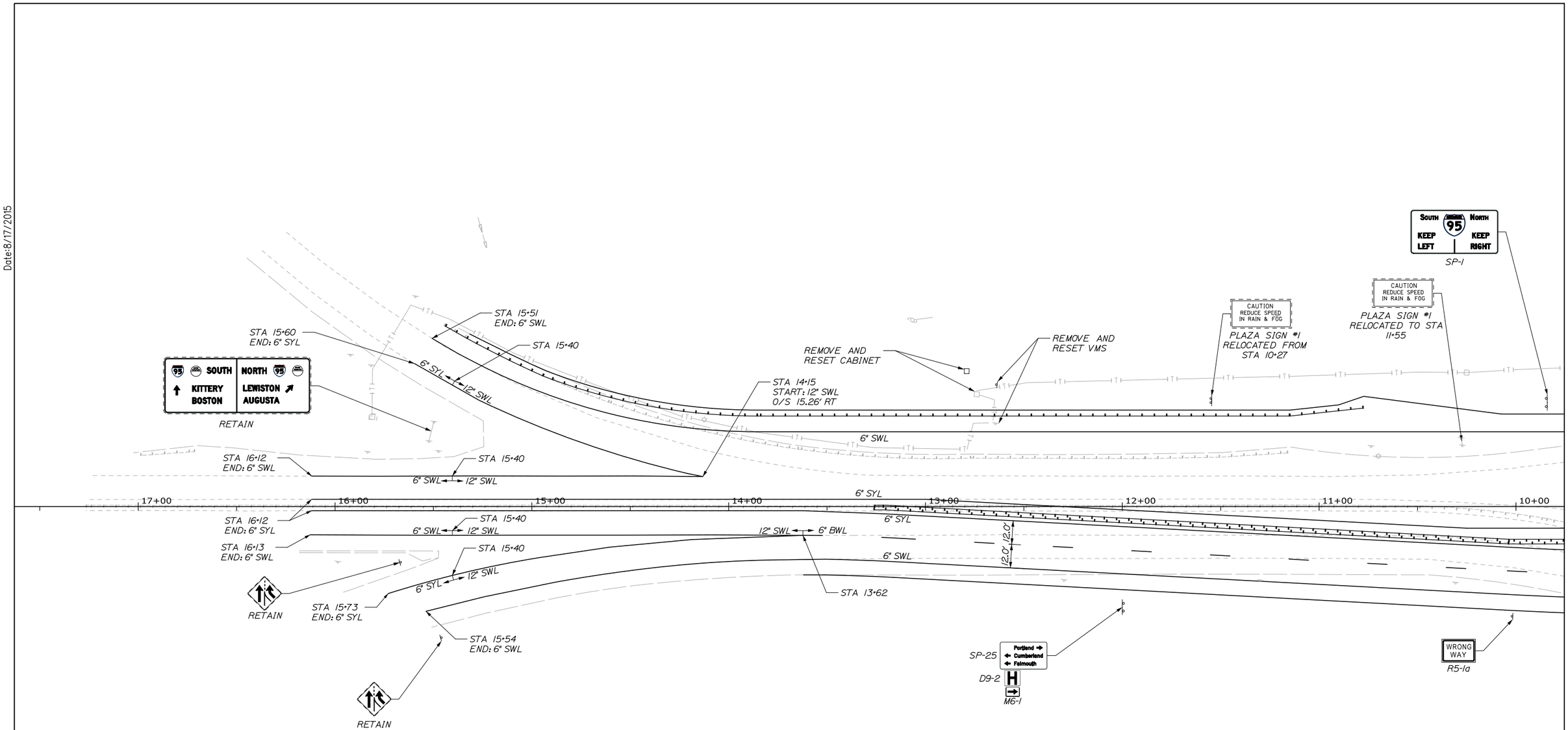

Filename: 036_Exit53_SSPlan02.dgn

Scale: 25 0 25 50

No.	Revision	By	Date

Designed by: HNTB

CONSULTANT PROJECT MANAGER: R. Bruce Munger, P.E.

	By	Date		By	Date
Designed	WA	08/15	Checked	EAR	08/15
Drawn	CP	08/15	In Charge of	RAL	08/15

HNTB CORPORATION
340 County Road, Suite 6-C
Westbrook, ME 04092
TEL (207) 774-5155
FAX (207) 228-0909

MAINE TURNPIKE

THE GOLD STAR MEMORIAL HIGHWAY

MTA PROJECT MANAGER: William Yates

INTERCHANGE 53
TOLL PLAZA REPLACEMENT

SIGNING AND STRIPING PLAN 2

SHEET NUMBER: SS-02

CONTRACT:2015.09

REMOVE & STACK SIGN SUMMARY

DESCRIPTION	QUANTITY	SIGN SIZE HEIGHT (IN)	SIGN SIZE WIDTH (IN)	SIGN SIZE AREA (SQ. FT.)	COLOR BACK-GROUND	COLOR LEGEND	DIRECTION (EB=EASTBOUND) (WB=WESTBOUND)	LOCATIONS
COMMUTER PARKING ONLY	1	60	60	25.00	GREEN	WHITE	EB	STA 06+92
VIOLATORS WILL BE TOWED	1	30	30	6.25	WHITE	RED	EB	STA 06+92
NO LONG TERM PARKING	1	30	24	5.00	WHITE	RED	EB	STA 06+92
EMPLOYEE PARKING ONLY	2	--	--	--	GREEN	WHITE	WB	STA 08+60 STA 08+69
	1	30	24	5.00	WHITE	BLACK	EB	STA 05+29
NO STOPPING PROCEED WITH CAUTION	1	54	48	18.00	WHITE	BLACK	EB	STA 08+02
TOLL PLAZA	1	12	24	2.00	YELLOW	BLACK	WB	STA 07+09
SPEED LIMIT 10	1	30	24	5.00	WHITE	BLACK	WB	STA 07+09
PAY TOLL AHEAD	1	30	24	5.00	YELLOW	BLACK	WB	STA 05+21
YIELD	1	48	48	16.00	RED	WHITE	WB	STA 05+00
DRIVERS STOP YOUR ENGINES	1	--	--	--	WHITE	RED	EB	STA 05+81
H	1	--	--	--	BLUE	WHITE	EB	STA 05+81
PORTLAND SEADOGS	1	--	--	--	WHITE	RED	EB	STA 05+81
← Gray Portland →	1	--	--	--	GREEN	WHITE	EB	STA 05+31

REMOVE & RESET CANOPY SIGN SUMMARY

DESCRIPTION	EXISTING SIGN SIZE HEIGHT (IN)	EXISTING SIGN SIZE WIDTH (IN)	EXISTING SIGN SIZE AREA (SQ. FT.)	EXISTING NUMBER AND TYPE OF POSTS	EXISTING COLOR BACK-GROUND	EXISTING COLOR LEGEND	EXISTING LOCATION	PROPOSED NUMBER OF POSTS	PROPOSED LOCATION	PROPOSED PAY ITEM
E-ZPass OTHERS PROHIBITED	36	108	27.00	MOUNTED TO CANOPY	PURPLE	WHITE	STA 8+20 (LANE 2)	MOUNTED TO CANOPY	STA 8+20 (LANE 2)	645.109
ANY VEHICLE CASH/RECEIPTS	36	108	27.00	MOUNTED TO CANOPY	WHITE	BLACK	STA 8+20 (LANE 1)	MOUNTED TO CANOPY	STA 8+20 (LANE 5)	645.109
E-ZPass OTHERS PROHIBITED	36	108	27.00	MOUNTED TO CANOPY	PURPLE	WHITE	-	MOUNTED TO CANOPY	STA 8+20 (LANE 2)	645.109 (PROVIDED BY MTA)

Date:8/17/2015

Date:8/17/2015

Filename: 037_Exit53_SSum01.dgn

Scale: N.T.S.

No.	Revision	By	Date

Designed by: HNTB

CONSULTANT PROJECT MANAGER: R. Bruce Munger, P.E.

	By	Date		By	Date
Designed	TMH	08/15	Checked	EAR	08/15
Drawn	PMK	08/15	In Charge of	RAL	08/15

HNTB CORPORATION
340 County Road, Suite 6-C
Westbrook, ME 04092
TEL (207) 774-5155
FAX (207) 228-0909

MAINE TURNPIKE

THE GOLD STAR MEMORIAL HIGHWAY

MTA PROJECT MANAGER: William Yates

INTERCHANGE 53
TOLL PLAZA REPLACEMENT

SIGN SUMMARY

SHEET NUMBER: SSUM-01

CONTRACT:2015.09

REMOVE & RESET SIGN SUMMARY

DESCRIPTION	EXISTING							PROPOSED							
	SIGN SIZE			NUMBER AND TYPE OF POSTS	COLOR		LOCATION	NUMBER OF POSTS	POST SIZE	HEIGHT OF POST		FOUNDATION SIZE AND TYPE	BREAKAWAY DEVICE	LOCATION	PAY ITEM
	HEIGHT (IN)	WIDTH (IN)	AREA (SQ. FT.)		BACK-GROUND	LEGEND				LEFT (FEET)	RIGHT (FEET)				
CAUTION REDUCE SPEED IN RAIN & FOG PLAZA SIGN #1	36	72	18.00	2 WOOD	YELLOW	BLACK	STA 10+27	1	W8X24	9.0'	--	24"	NO	STA 11+55	645.501
END TOLL PLAZA SPEED PLAZA SIGN #2	30	24	5.00	1 WOOD	WHITE	BLACK	STA 09+49	1	6X6 WOOD	8.5'	-	--	NO	STA 09+46	645.502
FARE SCHEDULE SIGN PASSENGER CARS $1.00 PLAZA SIGN #3	36 48	48 60	12.00 20.00	1 WOOD	WHITE YELLOW	BLACK BLACK	STA 07+53	1	W8X24	11.0'	-	24"	YES	STA 07+27	645.503
UNDER CLEARANCE TURNPIKE STRUCTURES 13' - 6" PROHIBITED ON TURNPIKE PLAZA SIGN #4	72 36	60 30	30.00 7.50	2 WOOD	YELLOW WHITE	BLACK BLACK	STA 06+65	1	W8X24	13.0'	--	24"	NO	STA 06+65	645.504
E-ZPASS ACCEPTED ALL LANES PLAZA SIGN #5	36	48	12.00	1 WOOD	GREEN	WHITE	STA 06+18	1	W6x9	9.0'	-	18"	NO	STA 06+15	645.505
8 INCH WATER MAIN PLAZA SIGN #6	10	18	1.25	U-CHANNEL POST	BLUE	WHITE	STA 06+24	1	U-CHANNEL POST	5.0'	-	--	NO	STA 06+23	645.506
WRONG WAY PLAZA SIGN #7	30	42	8.75	1 WOOD	RED	WHITE	STA 08+97	1	WOOD 6x6	8.5'	-	--	NO	STA 07+89	645.507
DO NOT ENTER PLAZA SIGN #8	36	36	9.00	1 WOOD	RED	WHITE	STA 05+11	1	WOOD 6x6	9.0'	-	--	NO	STA 05+36	645.508
DO NOT ENTER PLAZA SIGN #9	36	36	9.00	1 WOOD	RED	WHITE	STA 07+78	1	MOUNT WITH SP-25	--	-	--	--	STA 05+31	645.509
PLAZA SIGN #10	30	24	5.00	U-CHANNEL POST	WHITE	BLACK	STA 04+65	1	WOOD 6x6	9.0'	-	--	NO	STA 04+65	645.510
26 100 PLAZA SIGN #11	60	48	20.0	1 WOOD	WHITE	BLACK	STA 05+31	1	MOUNT WITH SP-25	--	--	--	--	STA 05+31	645.511

Date:8/17/2015

Date:8/17/2015

Filename: 038_Exit53_SSum02.dgn

Scale: N.T.S.

No.	Revision	By	Date

Designed by: HNTB

CONSULTANT PROJECT MANAGER: R. Bruce Munger, P.E.

	By	Date		By	Date
Designed	TMH	08/15	Checked	EAR	08/15
Drawn	PMK	08/15	In Charge of	RAL	08/15

HNTB CORPORATION
340 County Road, Suite 6-C
Westbrook, ME 04092
TEL (207) 774-5155
FAX (207) 228-0909

MAINE TURNPIKE

THE GOLD STAR MEMORIAL HIGHWAY

MTA PROJECT MANAGER: William Yates

INTERCHANGE 53
TOLL PLAZA REPLACEMENT
REMOVE AND RESET
SIGN SUMMARY

SHEET NUMBER: SSUM-02

CONTRACT:2015.09

PROPOSED SIGN SUMMARY

IDENTIFICATION NUMBER	DESCRIPTION	QUANTITY	COLOR		SIGN SIZE			NUMBER OF POSTS	POST SIZE	HEIGHT OF POST*			FOUNDATION SIZE AND TYPE	BREAKAWAY DEVICE	STATIONS	OFFSET (FROM BASELINE TO SIGN CENTER)	PAY ITEM NUMBER
			BACK-GROUND	LEGEND	HEIGHT (IN)	WIDTH (IN)	AREA (SQ. FT.)			LEFT (FEET)	CENTER (FEET)	RIGHT (FEET)					
D9-2	H	2	BLUE	WHITE	24	24	4.00	MOUNTED TO SP-25	--	--	--	--	--	--	12+00 05+31	51' LT 60' LT	645.271
D9-6		1	BLUE	WHITE	30	30	6.25	1	WOOD 6x6	--	8.5'	--	--	NO	8+89	95' LT	645.271
M6-1		2	WHITE	BLACK	9	12	0.75	MOUNTED TO SP-25	--	--	--	--	--	--	12+00 05+31	51' LT 60' LT	645.271
OM-1		1	YELLOW	BLACK	30	30	6.25	MOUNTED WITH PLAZA SIGN #10	--	--	--	--	--	--	04+65	13' LT	645.271
PLAQUE	AHEAD AT SIGNAL	1	YELLOW	BLACK	12	48	4.00	MOUNTED TO R3-8	--	--	--	--	--	--	08+26	35' LT	645.271
R1-2		1	RED	WHITE	48	48	16.00	1	W6X9	--	10.0'	--	18.0"	YES	04+95	42' RT	645.271
R2-1	SPEED LIMIT 10	4	WHITE	BLACK	30	24	5.00	MOUNTED TO TOLL BOOTH --	RESET POST AND FOUNDATION FROM STA 7+09	--	--	--	--	-- -- -- NO	08+10 08+10 08+10 06+90	23' RT 04' RT 15' LT 55' LT	645.271
R3-3a	NO U TURNS	1	WHITE	BLACK	18	24	3.00	MOUNTED WITH R3-4	--	--	--	--	--	--	04+65	13' LT	645.271
R3-4		1	WHITE	RED/ BLACK	36	36	9.00	1	W6X9	--	9.0'	--	18.0"	YES	04+65	13' LT	645.271
R3-8x	ONLY	1	WHITE	BLACK	30	48	10.00	MOUNTED TO GANTRY	--	--	--	--	--	--	08+26	35' LT	645.271
R5-1	DO NOT ENTER	2	RED	WHITE	36	36	9.00	MOUNTED TO GANTRY	--	--	--	--	--	--	08+25 08+26	29' LT 43' LT	645.271
R5-1a	WRONG WAY	1	RED	WHITE	30	42	8.75	1	WOOD 6x6	--	8.5'	--	--	NO	10+02	56' LT	645.271
R5-11	AUTHORIZED VEHICLES ONLY	2	WHITE	BLACK	30	24	5.00	1	WOOD 6x6	--	8.5'	--	--	NO NO	05+87 06+12	13' LT 13' LT	645.271
R8-3a	NO PARKING	2	WHITE	RED	30	24	5.00	1	WOOD 6x6	--	8.5'	--	--	NO NO	06+57 07+32	75' LT 75' LT	645.271
SP-1	SOUTH 95 NORTH KEEP LEFT / KEEP RIGHT	1	GREEN	WHITE	48	96	32.00	2	W8x18	10.0'	--	10.0'	24"	YES	09+84	53' RT	645.251
SP-2	EMPLOYEE PARKING ONLY	2	GREEN	WHITE	30	30	6.25	1	WOOD 6x6	--	8.5'	--	--	NO NO	09+16 09+07	95' RT 95' RT	645.251
SP-6p	TOLL PLAZA	1	YELLOW	BLACK	12	24	2.00	MOUNTED TO R2-1	-- --	--	--	--	--	--	06+90	55' RT	645.251
SP-20	PAY TOLL AHEAD	1	YELLOW	BLACK	30	24	5.00	1	WOOD 6x6	--	8.5'	--	--	NO	05+22	74' RT	645.251
SP-25	Portland → ← Cumberland ← Falmouth	2	GREEN	WHITE	42	72	21.00	1	W8X24	--	9.5'	--	24" 24"	YES YES	12+00 05+31	51' LT 60' LT	645.251

Date:8/17/2015

Date:8/17/2015

Filename: 039_Exit53_SSum03.dgn

Scale: N.T.S.

No.	Revision	By	Date

Designed by: HNTB

CONSULTANT PROJECT MANAGER: R. Bruce Munger, P.E.

	By	Date		By	Date
Designed	TMH	08/15	Checked	EAR	08/15
Drawn	PMK	08/15	In Charge of	RAL	08/15

HNTB CORPORATION
340 County Road, Suite 6-C
Westbrook, ME 04092
TEL (207) 774-5155
FAX (207) 228-0909

MAINE TURNPIKE

THE GOLD STAR MEMORIAL HIGHWAY

MTA PROJECT MANAGER: William Yates

INTERCHANGE 53
TOLL PLAZA REPLACEMENT

PROPOSED SIGN SUMMARY

SHEET NUMBER: SSUM-03

CONTRACT:2015.09

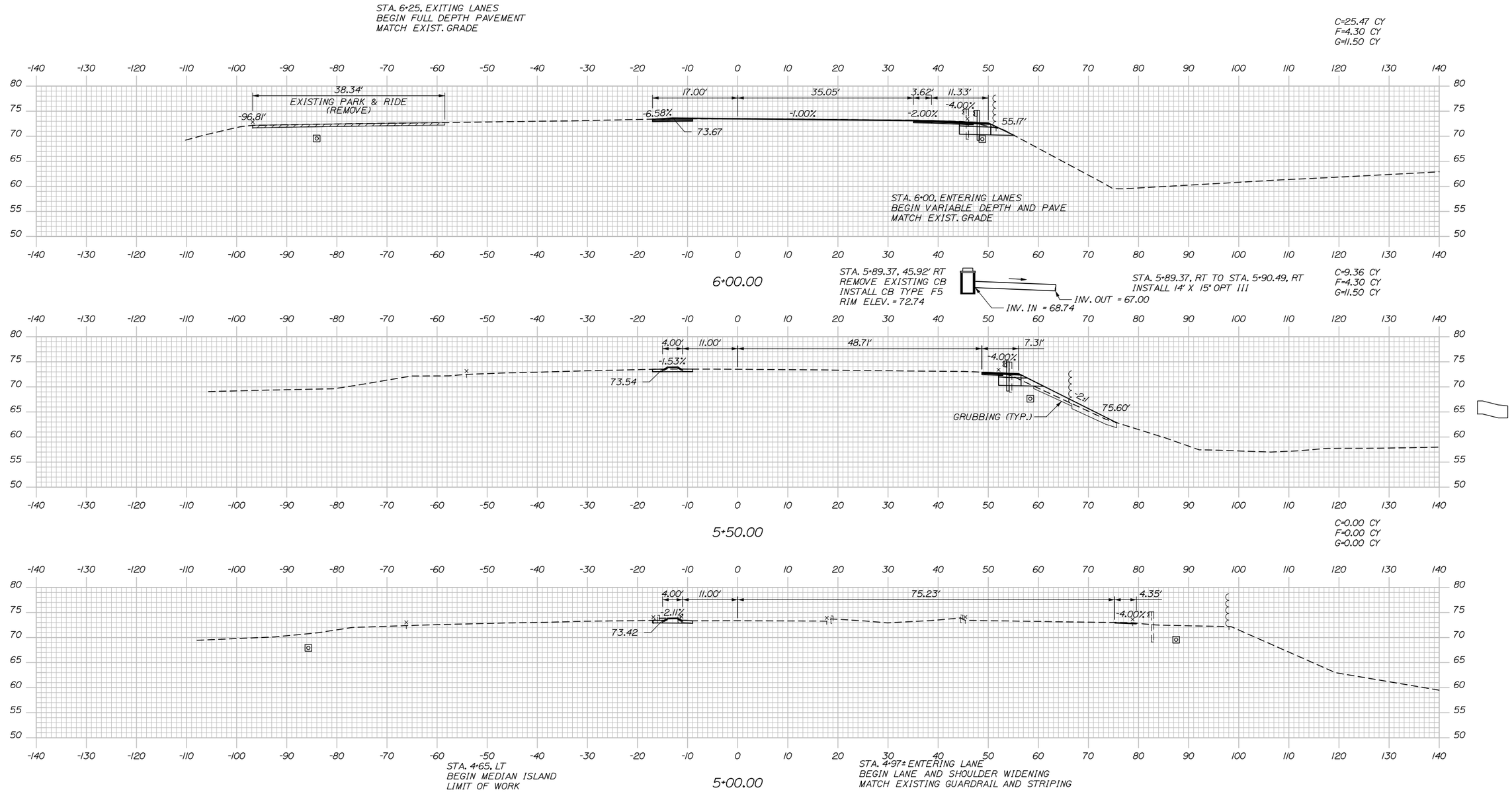

Date:8/17/2015

Filename: 040_XSection.dgn

Scale:

No.	Revision	By	Date

Designed by:

HNTB

CONSULTANT PROJECT MANAGER: R. Bruce Munger, P.E.

	By	Date		By	Date
Designed	CDH	08/15	Checked	CDH	08/15
Drawn	TJW	08/15	In Charge of	RAL	08/15

HNTB CORPORATION
340 County Road, Suite 6-C
Westbrook, ME 04092
TEL (207) 774-5155
FAX (207) 228-0909

MAINE TURNPIKE

THE GOLD STAR MEMORIAL HIGHWAY

MTA PROJECT MANAGER: William Yates

INTERCHANGE 53
TOLL PLAZA REPLACEMENT
CROSS SECTIONS
STA. 5+00 TO STA. 6+00

SHEET NUMBER: XS-01

CONTRACT:2015.09

Date:8/17/2015

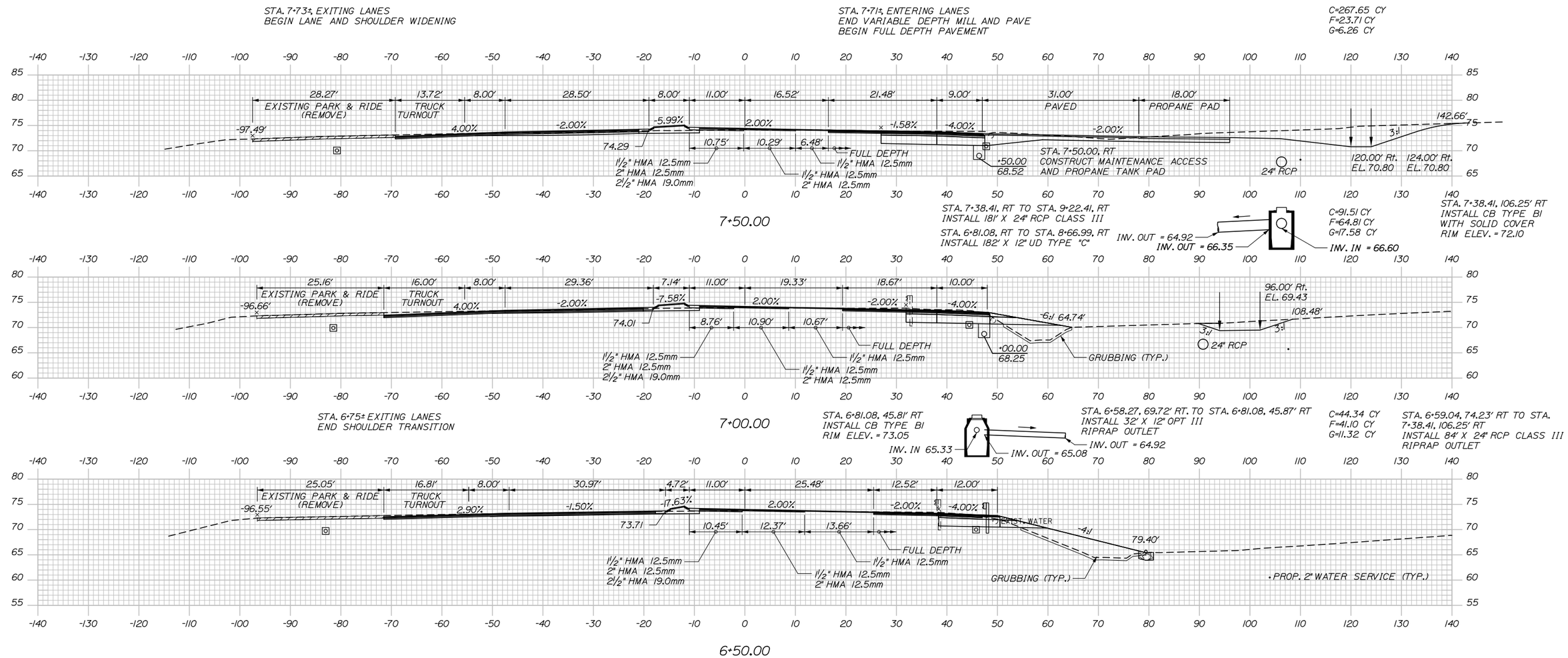

Filename: 041_XSection.dgn

Scale:

No.	Revision	By	Date

Designed by:

HNTB

CONSULTANT PROJECT MANAGER: R. Bruce Munger, P.E.

	By	Date		By	Date
Designed	CDH	08/15	Checked	CDH	08/15
Drawn	TJW	08/15	In Charge of	RAL	08/15

HNTB CORPORATION
340 County Road, Suite 6-C
Westbrook, ME 04092
TEL (207) 774-5155
FAX (207) 228-0909

MAINE TURNPIKE

THE GOLD STAR MEMORIAL HIGHWAY

MTA PROJECT MANAGER: William Yates

INTERCHANGE 53
TOLL PLAZA REPLACEMENT
CROSS SECTIONS
STA. 6+50 TO STA. 7+50

SHEET NUMBER: XS-02

CONTRACT:2015.09

STA. 9+22.41, 106.25' RT TO STA. 9+50.00, 63.30' RT
INSTALL 50' X 24" RCP CLASS III
RIPRAP INLET

STA. 9+22.41, 106.25' RT
INSTALL CB TYPE CI
WITH OPEN THROAT
AND PAVED APRON
RIM ELEV. = 72.64

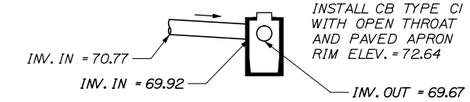

C=169.77 CY
F=65.70 CY
G=26.56 CY

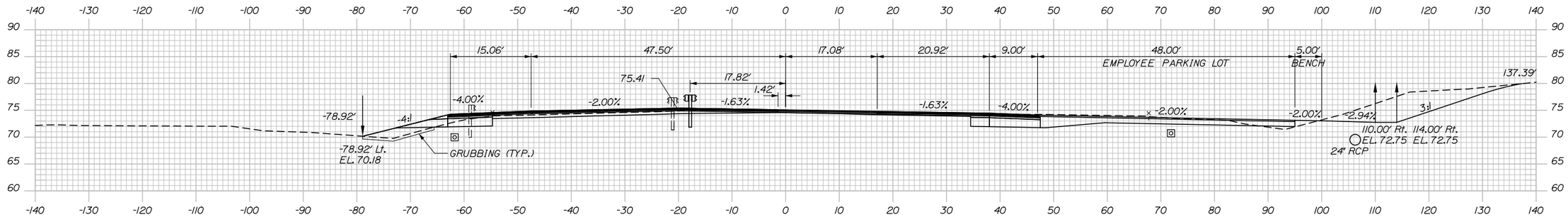

9+00.00

C=215.63 CY
F=122.26 CY
G=46.16 CY

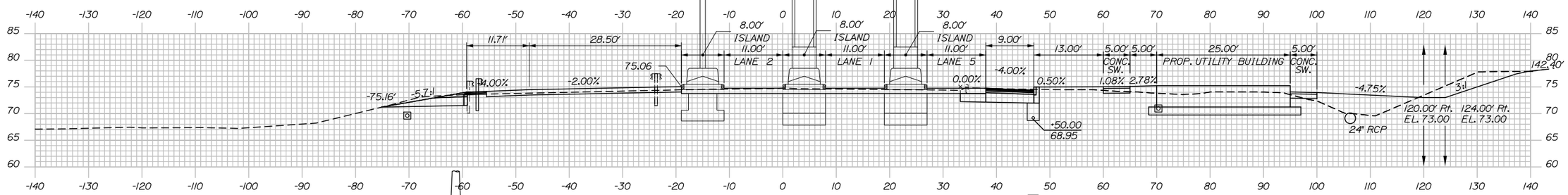

STA. 8+26.50, 61.25' LT
PROPOSED GANTRY FOUNDATION

STA 8+66.99, RT TO STA. 8+66.99, RT
INSTALL 40' X 12' RCP

8+50.00

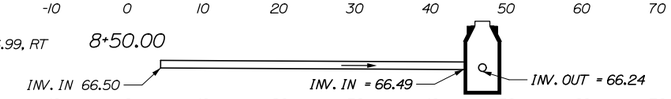

STA. 8+66.99, 45.87' RT
INSTALL CB TYPE AI
RIM ELEV. = 73.98

C=359.65 CY
F=23.94 CY
G=9.68 CY

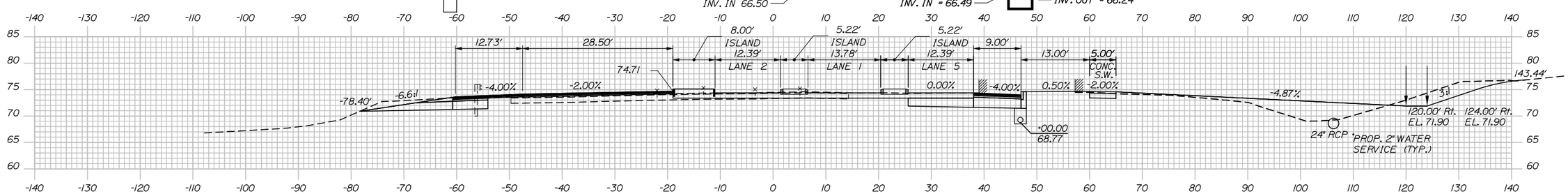

8+00.00

STA. 7+83 TO STA. 8+14, RT.
REMOVE EXISTING UTILITY BUILDING

Date:8/17/2015

Filename: 042_XSection.dgn

Scale:

No.	Revision	By	Date

Designed by:

HNTB

CONSULTANT PROJECT MANAGER: R. Bruce Munger, P.E.

	By	Date		By	Date
Designed	CDH	08/15	Checked	CDH	08/15
Drawn	TJW	08/15	In Charge of	RAL	08/15

HNTB CORPORATION
340 County Road, Suite 6-C
Westbrook, ME 04092
TEL (207) 774-5155
FAX (207) 228-0909

MAINE TURNPIKE

THE GOLD STAR MEMORIAL HIGHWAY

MTA PROJECT MANAGER: William Yates

INTERCHANGE 53
TOLL PLAZA REPLACEMENT
CROSS SECTIONS
STA. 8+00 TO STA. 9+00

SHEET NUMBER: XS-03

CONTRACT:2015.09

Date:8/17/2015

C=812.95 CY
F=0.00 CY
G=0.00 CY

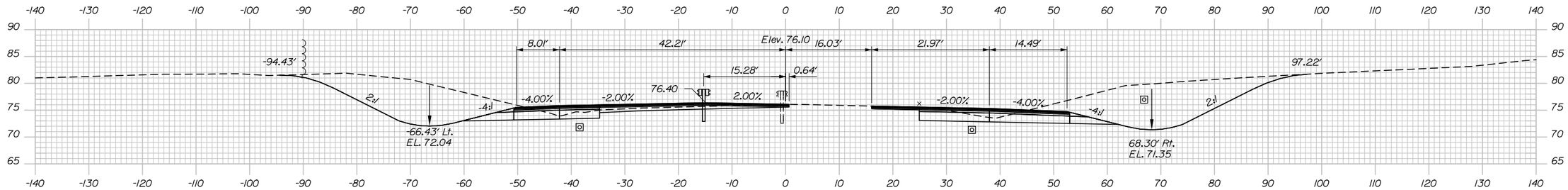

10+50.00

C=441.38 CY
F=2.10 CY
G=3.18 CY

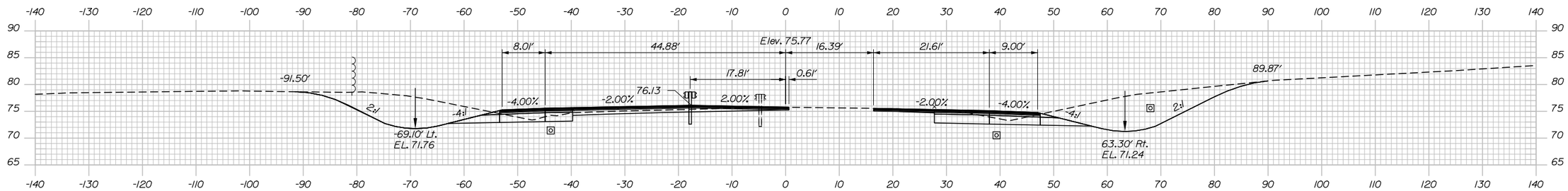

10+00.00

C=290.45 CY
F=14.95 CY
G=13.98 CY

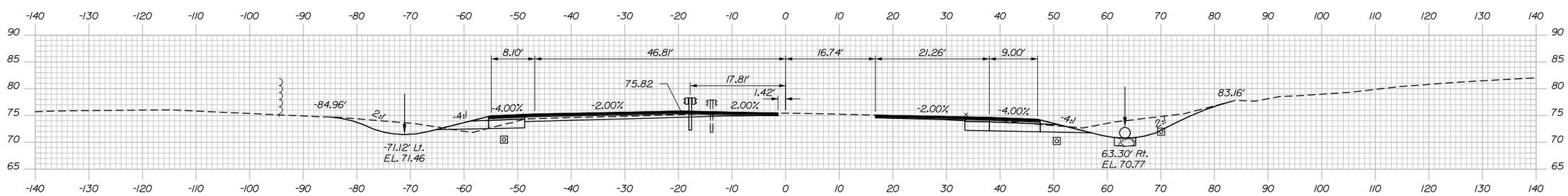

9+50.00

STA. 9+50, ENTERING LANES
END FULL DEPTH PAVEMENT
MATCH EXIST. GRADE

Filename: 043_XSection.dgn

Scale:

No.	Revision	By	Date

Designed by:

HNTB

CONSULTANT PROJECT MANAGER: R. Bruce Munger, P.E.

	By	Date		By	Date
Designed	CDH	08/15	Checked	CDH	08/15
Drawn	TJW	08/15	In Charge of	RAL	08/15

HNTB CORPORATION
340 County Road, Suite 6-C
Westbrook, ME 04092
TEL (207) 774-5155
FAX (207) 228-0909

MAINE TURNPIKE

THE GOLD STAR MEMORIAL HIGHWAY

MTA PROJECT MANAGER: William Yates

INTERCHANGE 53
TOLL PLAZA REPLACEMENT
CROSS SECTIONS
STA. 9+50 TO STA. 10+50

SHEET NUMBER: XS-04

CONTRACT:2015.09

Date:8/17/2015

C=673.53 CY
F=0.00 CY
G=0.00 CY

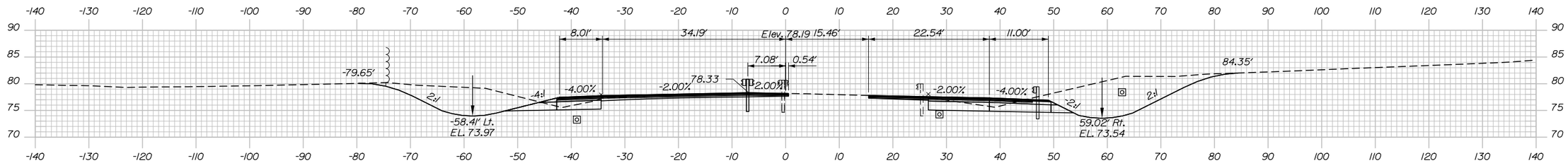

12+00.00

C=877.42 CY
F=0.00 CY
G=0.00 CY

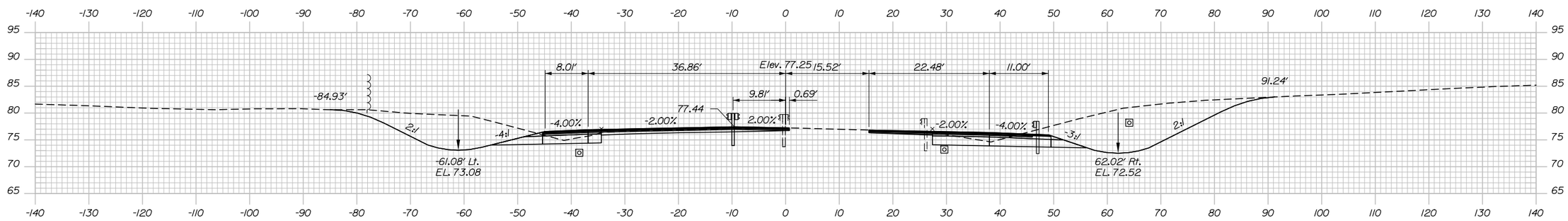

11+50.00

C=984.09 CY
F=0.00 CY
G=0.00 CY

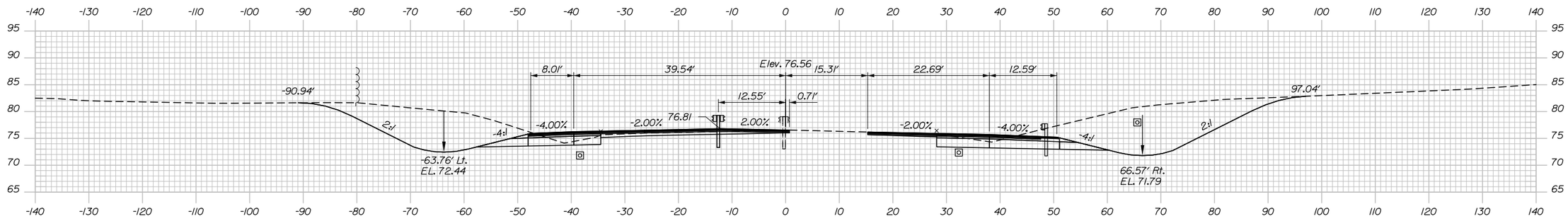

11+00.00

Filename: 044_XSection.dgn

No.	Revision	By	Date

Scale:

Designed by:

HNTB

CONSULTANT PROJECT MANAGER: R. Bruce Munger, P.E.

	By	Date		By	Date
Designed	CDH	08/15	Checked	CDH	08/15
Drawn	TJW	08/15	In Charge of	RAL	08/15

HNTB CORPORATION
340 County Road, Suite 6-C
Westbrook, ME 04092
TEL (207) 774-5155
FAX (207) 228-0909

MAINE TURNPIKE

THE GOLD STAR MEMORIAL HIGHWAY

MTA PROJECT MANAGER: William Yates

INTERCHANGE 53
TOLL PLAZA REPLACEMENT
CROSS SECTIONS
STA. 11+00 TO STA. 12+00

SHEET NUMBER: XS-05

CONTRACT:2015.09

C=101.78 CY
F=0.47 CY
G=5.28 CY

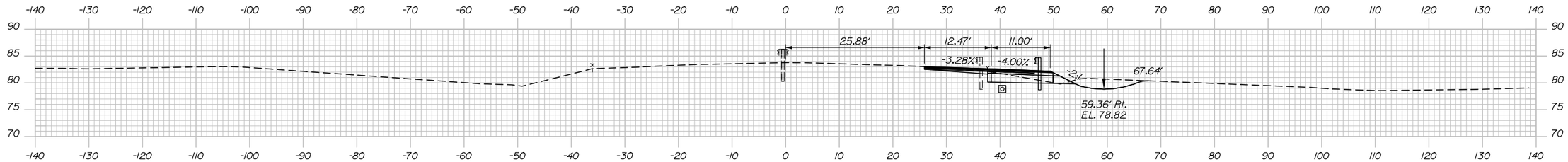

STA. 13+62±, LT
END LANE AND SHOULDER WIDENING
MATCH EXISTING STRIPING

14+00.00

C=180.69 CY
F=0.68 CY
G=6.14 CY

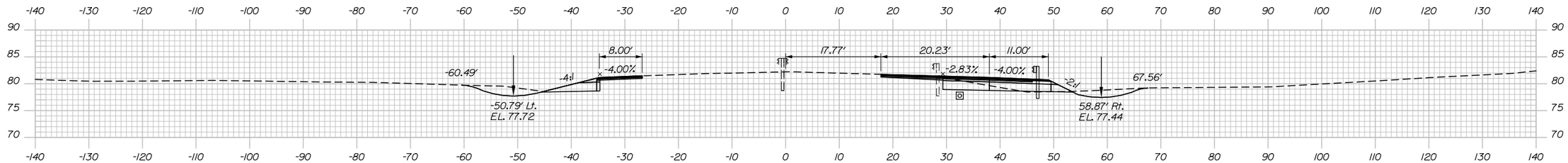

13+50.00

C=324.60 CY
F=0.24 CY
G=2.01 CY

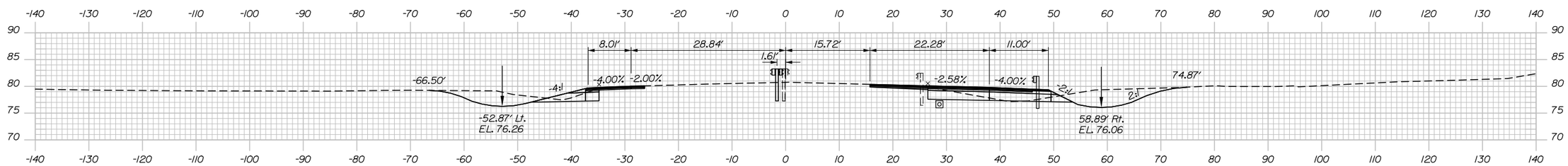

STA. 13+00, EXITING LANES
END FULL DEPTH PAVEMENT
BEGIN LANE AND SHOULDER WIDENING

13+00.00

STA. 12+64, 78.79' RT
RELOCATE VMS AND CONTROLLER CABINET

C=498.62 CY
F=0.00 CY
G=0.00 CY

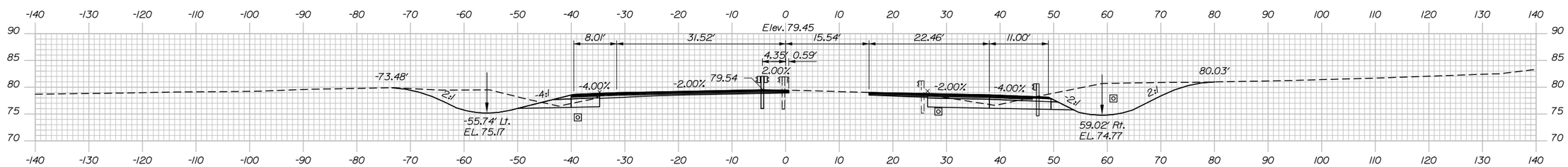

12+50.00

Date:8/17/2015

Filename: 045_XSection.dgn

Scale:			
No.	Revision	By	Date

Designed by:

HNTB

CONSULTANT PROJECT MANAGER: R. Bruce Munger, P.E.

	By	Date		By	Date
Designed	CDH	08/15	Checked	CDH	08/15
Drawn	TJW	08/15	In Charge of	RAL	08/15

HNTB CORPORATION
340 County Road, Suite 6-C
Westbrook, ME 04092
TEL (207) 774-5155
FAX (207) 228-0909

MAINE TURNPIKE

THE GOLD STAR MEMORIAL HIGHWAY

MTA PROJECT MANAGER: William Yates

INTERCHANGE 53
TOLL PLAZA REPLACEMENT
CROSS SECTIONS
STA. 12+50 TO STA. 14+00

SHEET NUMBER: XS-06

CONTRACT:2015.09

Date:8/17/2015

C=0.00 CY
F=0.00 CY
G=0.00 CY

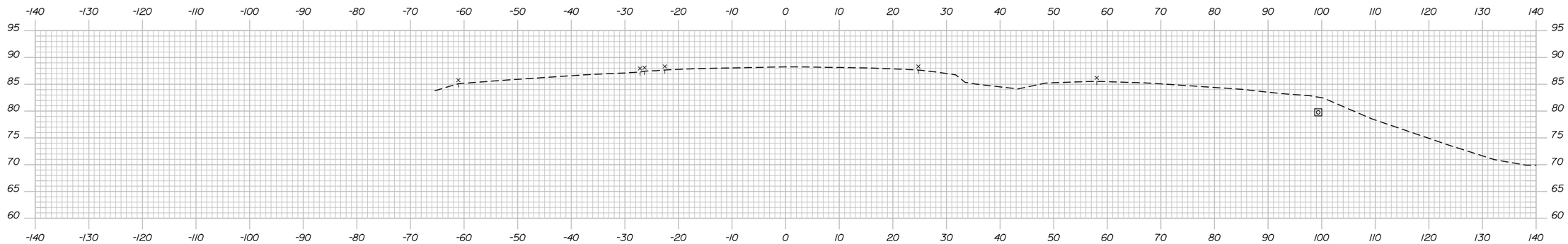

STA. 15+37±, ENTERING LANES
END LANE AND SHOULDER WIDENING
MATCH EXISTING GUARDRAIL AND STRIPING
LIMIT OF WORK

C=17.66 CY
F=0.00 CY
G=0.00 CY

15+50.00

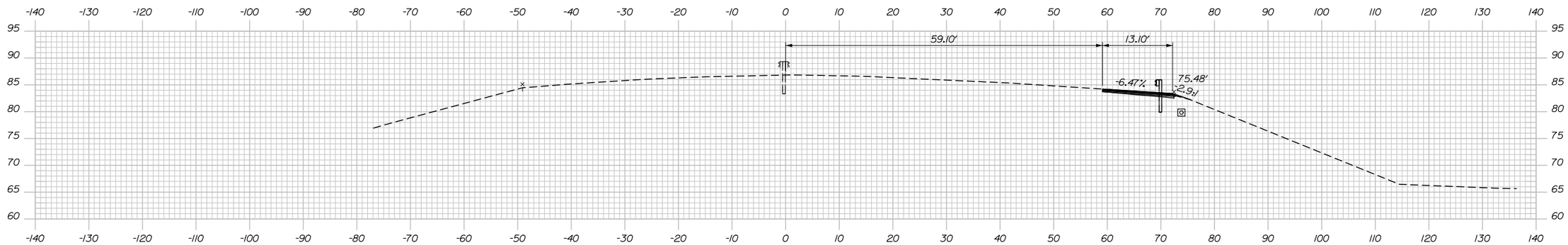

C=52.66 CY
F=0.04 CY
G=1.14 CY

15+00.00

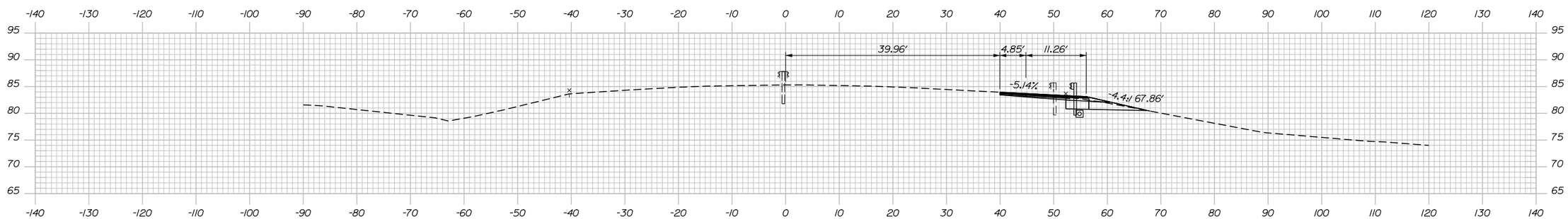

14+50.00

Filename: 046_XSection.dgn

Scale:			
No.	Revision	By	Date

Designed by:

HNTB

CONSULTANT PROJECT MANAGER: R. Bruce Munger, P.E.

	By	Date		By	Date
Designed	CDH	08/15	Checked	CDH	08/15
Drawn	TJW	08/15	In Charge of	RAL	08/15

HNTB CORPORATION
340 County Road, Suite 6-C
Westbrook, ME 04092
TEL (207) 774-5155
FAX (207) 228-0909

MAINE TURNPIKE

THE GOLD STAR MEMORIAL HIGHWAY

MTA PROJECT MANAGER: William Yates

INTERCHANGE 53
TOLL PLAZA REPLACEMENT
CROSS SECTIONS
STA. 14+50 TO STA. 15+50

SHEET NUMBER: XS-07

CONTRACT:2015.09

TOLL PLAZA STRUCTURAL GENERAL NOTES:

SPECIFICATIONS

DESIGN

STRUCTURAL SLAB
- AASHTO LRFD BRIDGE DESIGN SPECIFICATIONS, 7TH EDITION WITH 2015 INTERIMS
- AASHTO STANDARD SPECIFICATIONS FOR HIGHWAY BRIDGES (17th EDITION)
- AASHTO STANDARD SPECIFICATIONS FOR STRUCTURAL SUPPORTS FOR HIGHWAY SIGNS, LUMINAIRES, AND TRAFFIC SIGNALS (6th EDITION 2013 WITH 2015 INTERIMS)
- AASHTO BRIDGE DESIGN GUIDE SPECIFICATIONS FOR GFRP-REINFORCED CONCRETE BRIDGE DECKS AND TRAFFIC RAILINGS (NOVEMBER 2009)

EXISTING CANOPY MODIFICATIONS
- AISC MANUAL OF STEEL CONSTRUCTION, LRFD METHOD, 13th EDITION
- ASCE 7-10 MINIMUM DESIGN LOADS FOR BUILDINGS AND OTHER STRUCTURES, 3rd PRINTING (2013)

CONSTRUCTION

STATE OF MAINE, DEPARTMENT OF TRANSPORTATION STANDARD SPECIFICATIONS, HIGHWAYS AND BRIDGES, REVISION OF 2002

STATE OF MAINE, DEPARTMENT OF TRANSPORTATION STANDARD DETAILS FOR HIGHWAYS AND BRIDGES, DECEMBER 2002 WITH UPDATES

DESIGN LOADING

LIVE LOAD

STRUCTURAL SLAB - HL-93

EXISTING CANOPY MODIFICATIONS - 20 PSF

WIND

BASIC WIND SPEED (V) = 95 MPH

SNOW / ICE

EXISTING CANOPY MODIFICATIONS - GROUND SNOW LOAD, p_g = 70 PSF (ASCE 7-10)

MATERIALS

CONCRETE

ALL STRUCTURAL CONCRETE - CLASS AAA
STRUCTURAL CONCRETE FOR ROADWAY SLAB - CLASS AAA DECK

REINFORCING STEEL

ASTM A775 GRADE 60 (EPOXY-COATED BARS)

ASTM A884 CLASS A (EPOXY-COATED WELDED WIRE FABRIC)

ANCHOR RODS

SHALL MEET THE REQUIREMENTS OF ASTM F1554 GRADE 55 FOR CANOPY AND GANTRY; ASTM F1554 GRADE 105 FOR VMS SIGN. ANCHOR RODS SHALL BE SWEDGED OR THREADED ON THE EMBEDDED PORTION OF THE ROD.

GFRP REINFORCING

ASLAN 100 GFRP GLASS FIBER REINFORCED POLYMER (GFRP) REINFORCING BARS AS MANUFACTURED BY HUGHES BROTHERS, INC. OR APPROVED EQUAL

STRUCTURAL STEEL

STRUCTURAL STEEL TUBING SHALL CONFORM TO ASTM A500, GRADE B (f_y = 46,000 PSI)

ALL OTHER STRUCTURAL STEEL SHALL CONFORM TO ASTM A709, GRADES 36 AND 50 AS SPECIFIED.

BASIC DESIGN STRESSES

CONCRETE

CLASS AAA - f'_c = 4,500 PSI
CLASS AAA DECK - f'_c = 4,500 PSI

REINFORCING STEEL

f_y = 60,000 PSI (BARS)

STRUCTURAL STEEL

ASTM A500 - f_y = 46,000 PSI

ASTM A709 GRADE 36 - f_y = 36,000 PSI

ASTM A709 GRADE 50 - f_y = 50,000 PSI

GFRP

#6 BAR - MINIMUM TENSILE STRESS = 90,000 PSI

ANCHOR RODS

CANOPY: ASTM F1554 GRADE 55 - f_y = 55,000 PSI

CONSTRUCTION NOTES:

1. DIMENSIONS, ANGLES, BEARINGS AND ELEVATIONS SHOWN ON THE PLANS HAVE BEEN OBTAINED FROM AVAILABLE PLANS OF THE EXISTING STRUCTURE, LIMITED FIELD INVESTIGATION, AND SURVEY AND MAY NOT ACCURATELY REFLECT ACTUAL FIELD CONDITIONS. ACCORDINGLY, THE CONTRACTOR SHALL BE RESPONSIBLE FOR MAKING FIELD MEASUREMENTS OF ALL EXISTING STRUCTURE COMPONENTS IMPACTED BY THE NEW WORK TO ASSURE CONSISTENCY WITH THE PROPOSED MODIFICATIONS. THE CONTRACTOR SHALL NOTIFY THE RESIDENT OF ANY EXISTING CONDITIONS THAT DO NOT MATCH THE AS-BUILT DRAWINGS OR THESE PLANS PRIOR TO ADVANCING THE WORK. SHOP DRAWINGS REQUIRED FOR VARIOUS ITEMS OF WORK SHALL INDICATE THE ACTUAL FIELD MEASUREMENTS AND SHALL BE SO NOTED.

2. THE CONTRACTOR SHALL TAKE SPECIAL CARE AND PRECAUTION TO ENSURE THAT NO DEBRIS FALLS, SPILLS OR ROLLS ONTO THE OPEN ROADWAY DURING CONSTRUCTION.

3. ANY DAMAGE TO EXISTING CONCRETE OR REINFORCING RESULTING FROM THE WORK PERFORMED SHALL BE REPAIRED OR REPLACED BY A METHOD APPROVED BY THE RESIDENT AT NO COST TO THE AUTHORITY.

4. ALL CONSTRUCTION SIGNING AND TRAFFIC CONTROL MEASURES SHALL BE IN PLACE BEFORE CONSTRUCTION WORK BEGINS.

5. WHERE DRILLING AND ANCHORING OF REINFORCING STEEL IS SPECIFIED THE CONTRACTOR SHALL USE A MATERIAL LISTED ON THE MAINEDOT PRE QUALIFIED LIST OF CHEMICAL ANCHORING MATERIALS. THE DEPTH OF EMBEDMENT SHALL BE SUFFICIENT TO DEVELOP 125% OF THE YIELD STRENGTH OF THE BAR, BUT SHALL BE NO LESS THAN THE MINIMUM DEPTH OF EMBEDMENT WHEN SPECIFIED. WHERE MINIMUM EMBEDMENT DEPTHS HAVE NOT BEEN SPECIFIED BAR LENGTHS HAVE BEEN DEVELOPED BASED ON AN ASSUMED EMBEDMENT DEPTH 12" FOR ALL BAR SIZES. THE CONTRACTOR SHALL VERIFY THE REQUIRED DEPTH OF EMBEDMENT AND ADJUST THE REQUIRED BAR LENGTHS AS NEEDED.

6. WHERE DRILLING AND GROUTING OF GFRP REINFORCEMENT IS SPECIFIED THE CONTRACTOR SHALL USE A MATERIAL APPROVED BY THE GFRP REINFORCEMENT MANUFACTURER. THE DEPTH OF EMBEDMENT SHALL BE SUFFICIENT TO DEVELOP THE FRACTURE STRENGTH OF THE BAR, BUT SHALL BE NO LESS THAN THE MINIMUM LENGTH OF EMBEDMENT WHEN SPECIFIED OR THE MANUFACTURER'S RECOMMENDATIONS, WHICHEVER IS GREATER. WHERE MINIMUM EMBEDMENT LENGTHS HAVE NOT BEEN SPECIFIED, BAR LENGTHS HAVE BEEN DEVELOPED BASED ON AN ASSUMED DEPTH OF EMBEDMENT OF 12" FOR #6 BARS. THE CONTRACTOR SHALL VERIFY THE REQUIRED EMBEDMENT LENGTHS AS REQUIRED.

7. THE CONTRACTOR SHALL SAWCUT CONCRETE IN ALL TOLL LANES FOR DEMOLITION (FULL DEPTH LONGITUDINAL CUTS 6" OR LESS FROM ISLAND CURBS ALONG EACH SIDE OF THE LANE ADJACENT TO AN ISLAND). ALL CONCRETE BETWEEN THE SAW CUT AND THE ISLAND CURBS SHALL ALSO BE REMOVED BY THE CONTRACTOR. THE JOINT AT THE FACE OF CURB SHALL BE VERTICAL, CLEAN, AND TO THE SATISFACTION OF THE RESIDENT. METHODS OR ACTIVITIES THAT PROVE DETRIMENTAL TO THE CONSTRUCTION OF SOUND JOINTS, THE CURB, OR THE TOLL ISLAND WILL BE DISCONTINUED. WORK SHALL BE INCIDENTAL TO ITEM 202.12 - REMOVING EXISTING STRUCTURAL CONCRETE.

8. STRUCTURAL SLAB DEPTHS AVERAGE 12", BUT AT EXISTING TREADLE AREAS DEPTHS CAN VARY FROM 18" TO 30" WITH REINFORCED CONCRETE. LIMITS OF THIS EXTRA DEPTH TREADLE HAUNCH AREA VARIES.

9. THE CONTRACTOR SHALL PROVIDE SOFT CUT JOINTS AS NOTED ON PLANS OR AS DIRECTED BY THE RESIDENT. THIS WORK SHALL BE INCIDENTAL TO ITEM 502.262 - STRUCTURAL CONCRETE ROADWAY SLAB ON GRADE.

10. ALL STRUCTURAL CONCRETE FOR ROADWAY SLAB ON GRADE (ITEM 502.262) SHALL BE CLASS AAA DECK CONCRETE AND CONTAIN 5 LBS PER CY OF SYNTHETIC FIBER REINFORCEMENT.

11. ALL EXISTING MATERIALS WHICH ARE REMOVED FROM THE WORK AREA SHALL BE REMOVED FROM THE SITE AND PROPERLY DISPOSED OF BY THE CONTRACTOR IN A MANNER IN ACCORDANCE WITH THE MAINE DEPARTMENT OF ENVIRONMENTAL PROTECTION SOLID WASTE REGULATIONS. THESE EXISTING MATERIALS INCLUDE, BUT ARE NOT LIMITED TO, CONCRETE, METAL CASING, REINFORCING STEEL, SILT AND DEBRIS ON OR ATTACHED TO THE STRUCTURE WITHIN THE WORK AREAS. THE COST OF REMOVAL AND DISPOSAL SHALL BE INCIDENTAL TO THE COST OF THE WORK ITEMS FOR WHICH THESE REMOVALS ARE REQUIRED.

12. REMOVAL OF LOOPS, CONDUIT AND ASSOCIATED WIRING IN EXISTING CONCRETE SHALL BE INCIDENTAL TO ITEM 202.12: REMOVING EXISTING STRUCTURAL CONCRETE.

13. ALL EXPOSED THREADED ROD SHALL BE CUT FLUSH WITH THE CONCRETE. ANY DISTURBED CONCRETE SHALL BE PATCHED TO THE SATISFACTION OF THE RESIDENT.

14. DURING PHASED REMOVAL OR CONSTRUCTION OF TOLL ISLANDS, IF ANY INTERFERENCE IS INCURRED BETWEEN THE PROPOSED AND EXISTING CANOPIES, THE EXISTING CANOPY MAY BE CUT TO CLEAR ROOM FOR THE PROPOSED CANOPY.

15. PREMOLDED JOINT FILLER SHALL CONFORM TO ASTM DESIGNATION D1752, TYPE 1 OR ASTM D5249, TYPE 2. PREMOLDED JOINT FILLER SHALL BE A NON STAINING, NON BLEEDING TYPE. PRODUCTS SUCH AS 'CERAMAR', MANUFACTURED BY W. R. MEADOWS, OR AN APPROVED EQUAL WILL BE ACCEPTABLE. CORK IS NOT AN ACCEPTABLE JOINT FILLER MATERIAL. PREMOLDED JOINT FILLER AND SELF LEVELING ELASTOMERIC SEALANT SHALL BE INCIDENTAL TO ITEM 502.262, STRUCTURAL CONCRETE, PAVEMENT SLABS.

16. SELF LEVELING ELASTOMERIC SEALANT SHALL BE SIKA FLEX ICSL OR AN APPROVED EQUAL.

17. ALL REINFORCING STEEL SHALL HAVE 2" COVER UNLESS NOTED OTHERWISE.

18. CHAMFER ALL EXPOSED EDGES OF CONCRETE ¾" UNLESS NOTED OTHERWISE.

19. ALL EXPOSED CONCRETE SURFACES SHALL RECEIVE A CLEAR PROTECTIVE COATING IN ACCORDANCE WITH THE PROJECT SPECIFICATIONS.

20. GRANITE CURBING ON ISLAND SHALL BE PAID FOR UNDER ITEMS 609.11 VERTICAL CURB TYPE 1 AND 609.12 VERTICAL CURB TYPE 1 - CIRCULAR.

21. COPIES OF THE AS BUILT PLANS ARE ON FILE AT THE MAINE TURNPIKE AUTHORITY. THE COMPLETENESS AND ACCURACY OF THESE PLANS IS NOT GUARANTEED.

INDEX OF DRAWINGS

STRUCTURAL GENERAL NOTES & INDEX OF DRAWINGS	STR-01
PHASE 1 - ISLAND & CANOPY INSTALLATION	STR-02
PHASE 2 - DEMOLITION & INSTALLATION	STR-03
PHASE 3 - DEMOLITION & INSTALLATION	STR-04
STRUCTURAL PHASING DETAILS	STR-05
STRUCTURAL SLAB LAYOUT	STR-06
STRUCTURAL SLAB SECTIONS	STR-07
STRUCTURAL SLAB TYPICAL DETAILS & REINFORCEMENT SCHEDULE	STR-08
ISLAND TYPE A PLAN & ELEVATION	STR-09
ISLAND TYPE A DETAILS	STR-10
ISLAND TYPE A SECTIONS	STR-11
ISLAND TYPE A REINFORCEMENT SCHEDULE	STR-12
ISLAND TYPE B PLAN & PROFILE	STR-13
ISLAND TYPE B DETAILS	STR-14
ISLAND TYPE B SECTIONS	STR-15
ISLAND TYPE B REINFORCEMENT SCHEDULE	STR-16
CANOPY SECTIONS & DETAILS	STR-17
CANOPY FRAMING & DETAILS	STR-18
GANTRY SECTIONS & DETAILS	STR-19
CANOPY SIGNS TYPICAL DETAILS	STR-20
VMS SIGN FOUNDATION	STR-21

Date:8/17/2015

Filename: 047_StructuralGeneralNotes & Dwg Index.dgn

Scale:

No.	Revision	By	Date

Designed by: HNTB

CONSULTANT PROJECT MANAGER: R. Bruce Munger, P.E.

	By	Date		By	Date
Designed	AJF	08/15	Checked	RBM	08/15
Drawn	PEB	08/15	In Charge of	RAL	08/15

HNTB CORPORATION
340 County Road, Suite 6-C
Westbrook, ME 04092
TEL (207) 774-5155
FAX (207) 228-0909

MAINE TURNPIKE

THE GOLD STAR MEMORIAL HIGHWAY

MTA PROJECT MANAGER: William Yates

INTERCHANGE 53
TOLL PLAZA REPLACEMENT
STRUCTURAL GENERAL NOTES & INDEX OF DRAWINGS

SHEET NUMBER: STR-01

CONTRACT:2015.09

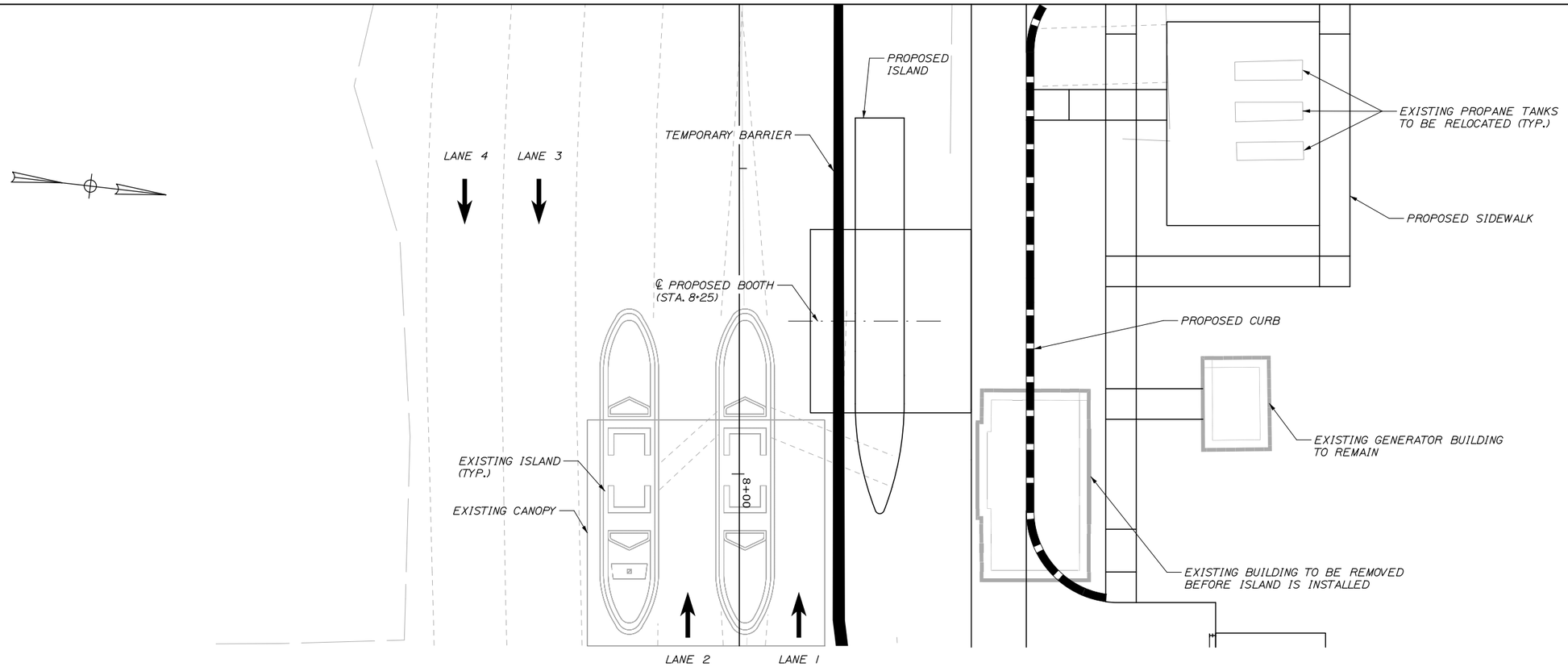

PHASE 1 PLAN

SCALE: 1" = 10'-0"

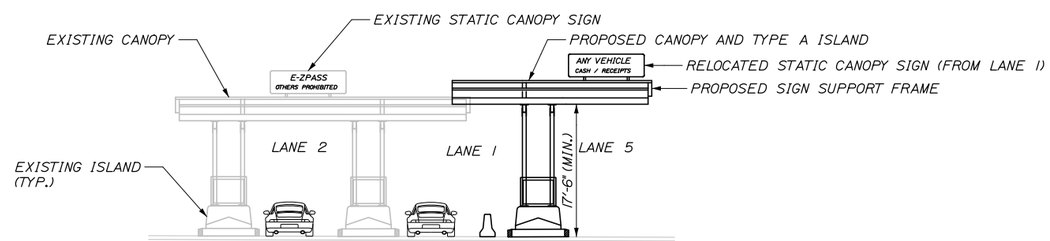

NOTE:
EXISTING GANTRY POST NOT SHOWN FOR CLARITY

PHASE 1 ELEVATION

SCALE: 1" = 4'-0"

PHASE 1 WORK

1. REMOVE
   A. SEE MAINTENANCE OF TRAFFIC SHEET MT-11 FOR WORK TO BE DONE PRIOR TO ISLAND 5 WORK

2. INSTALL
   A. NEW ISLAND TO ℄ BOOTH LOCATED AT STATION 8+25
   B. NEW CANOPY TO LIMITS SHOWN ON SHEET STR-17.

Date:8/17/2015

Filename: 048_Exit53_Structural Phase 1.dgn

Scale:			
No.	Revision	By	Date

Designed by:

HNTB

CONSULTANT PROJECT MANAGER: R. Bruce Munger, P.E.

	By	Date		By	Date
Designed	AJF	08/15	Checked	RBM	08/15
Drawn	PEB	08/15	In Charge of	RAL	08/15

HNTB CORPORATION
340 County Road, Suite 6-C
Westbrook, ME 04092
TEL (207) 774-5155
FAX (207) 228-0909

MAINE TURNPIKE

THE GOLD STAR MEMORIAL HIGHWAY

MTA PROJECT MANAGER: William Yates

INTERCHANGE 53
TOLL PLAZA REPLACEMENT
PHASE 1
ISLAND AND CANOPY INSTALLATION

SHEET NUMBER: STR-02

CONTRACT:2015.09

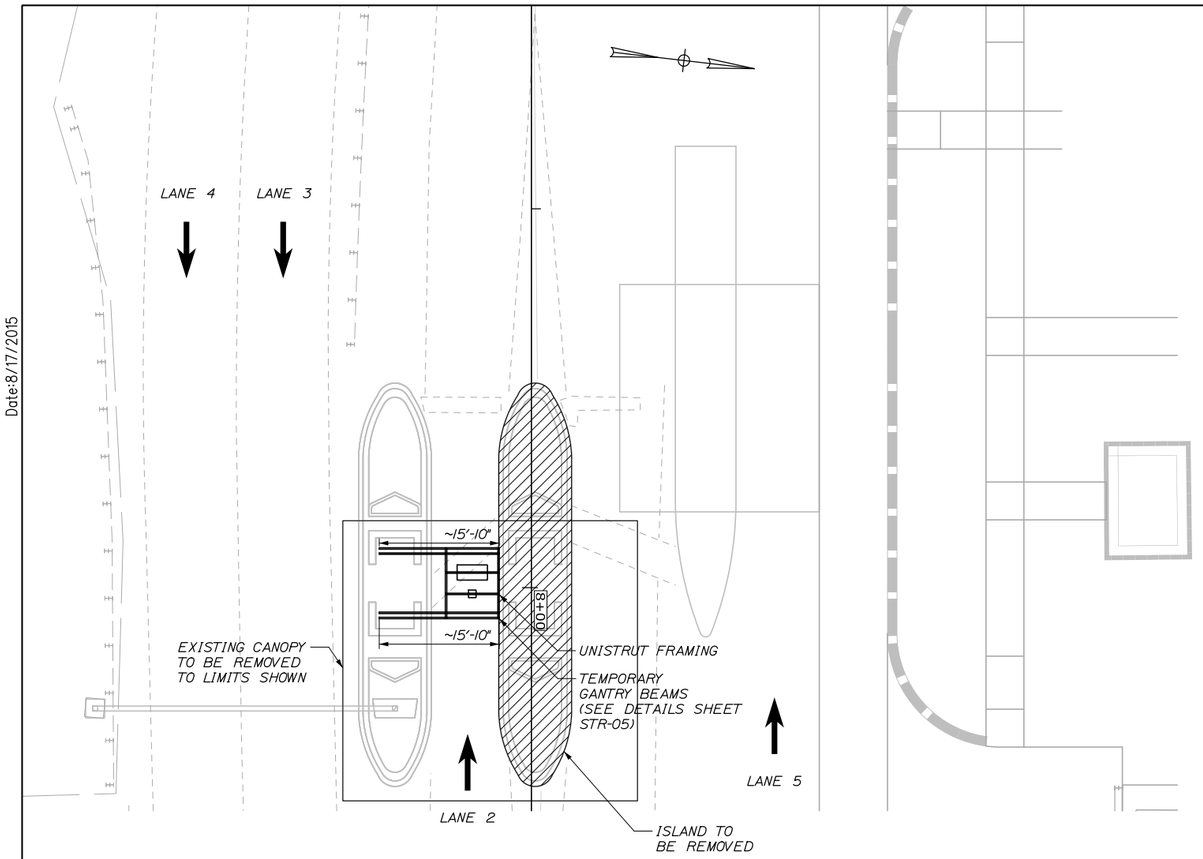

PHASE 2 PLAN

SCALE: 1" = 10'-0"

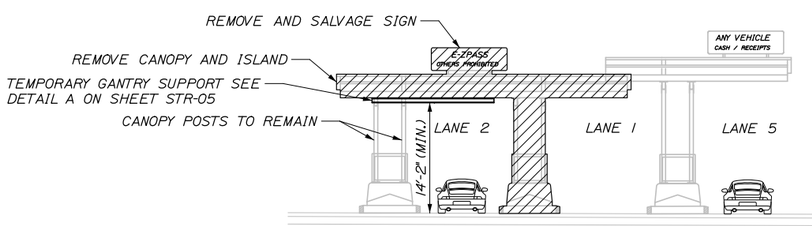

NOTE:
EXISTING GANTRY POST NOT SHOWN FOR CLARITY

PHASE 2 ELEVATION

SCALE: 1" = 4'-0"

PHASE 2 WORK

1. INSTALL
   A. TEMPORARY GANTRY
2. REMOVE
   A. ISLAND AT LANE 1
   B. EXISTING CANOPY AT LANE 1 & 2

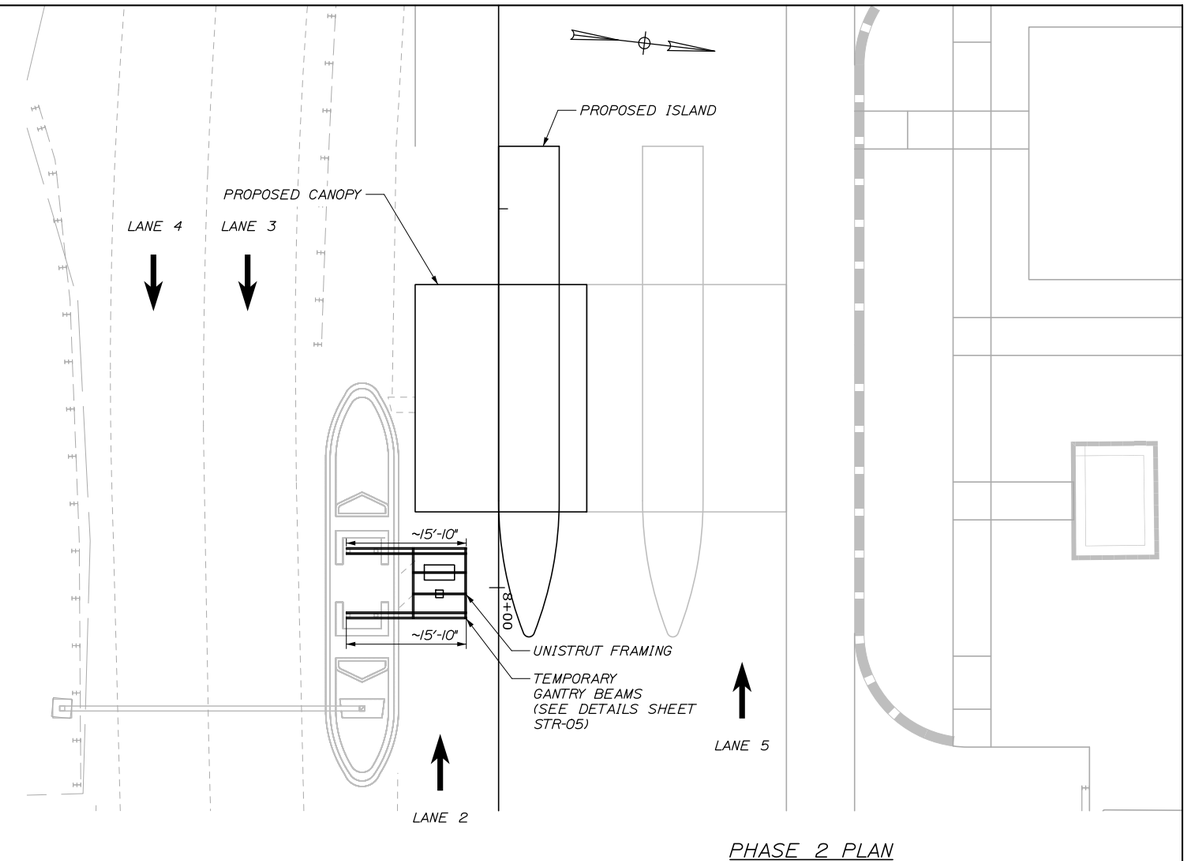

PHASE 2 PLAN

SCALE: 1" = 10'-0"

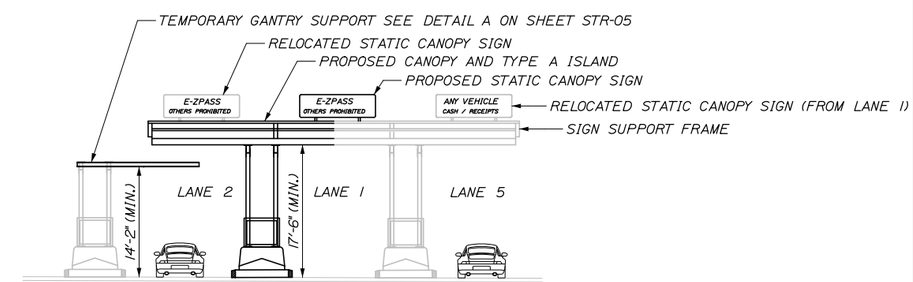

NOTE:
EXISTING GANTRY POST NOT SHOWN FOR CLARITY

PHASE 2 ELEVATION

SCALE: 1" = 4'-0"

PHASE 2 WORK

2. INSTALL
   A. NEW ISLAND AT LANE 1 SET BACK AS SHOWN ABOVE
   B. FINISH CANOPY

Date:8/17/2015

Filename: 049_Exit53_StructuralPhase 2.dgn

Scale:

No.	Revision	By	Date

Designed by: HNTB

CONSULTANT PROJECT MANAGER: R. Bruce Munger, P.E.

	By	Date		By	Date
Designed	AJF	08/15	Checked	RBM	08/15
Drawn	PEB	08/15	In Charge of	RAL	08/15

HNTB CORPORATION
340 County Road, Suite 6-C
Westbrook, ME 04092
TEL (207) 774-5155
FAX (207) 228-0909

MAINE TURNPIKE

THE GOLD STAR MEMORIAL HIGHWAY

MTA PROJECT MANAGER: William Yates

INTERCHANGE 53
TOLL PLAZA REPLACEMENT
PHASE 2
DEMOLITION & INSTALLATION

SHEET NUMBER: STR-03

CONTRACT:2015.09

Date:8/17/2015

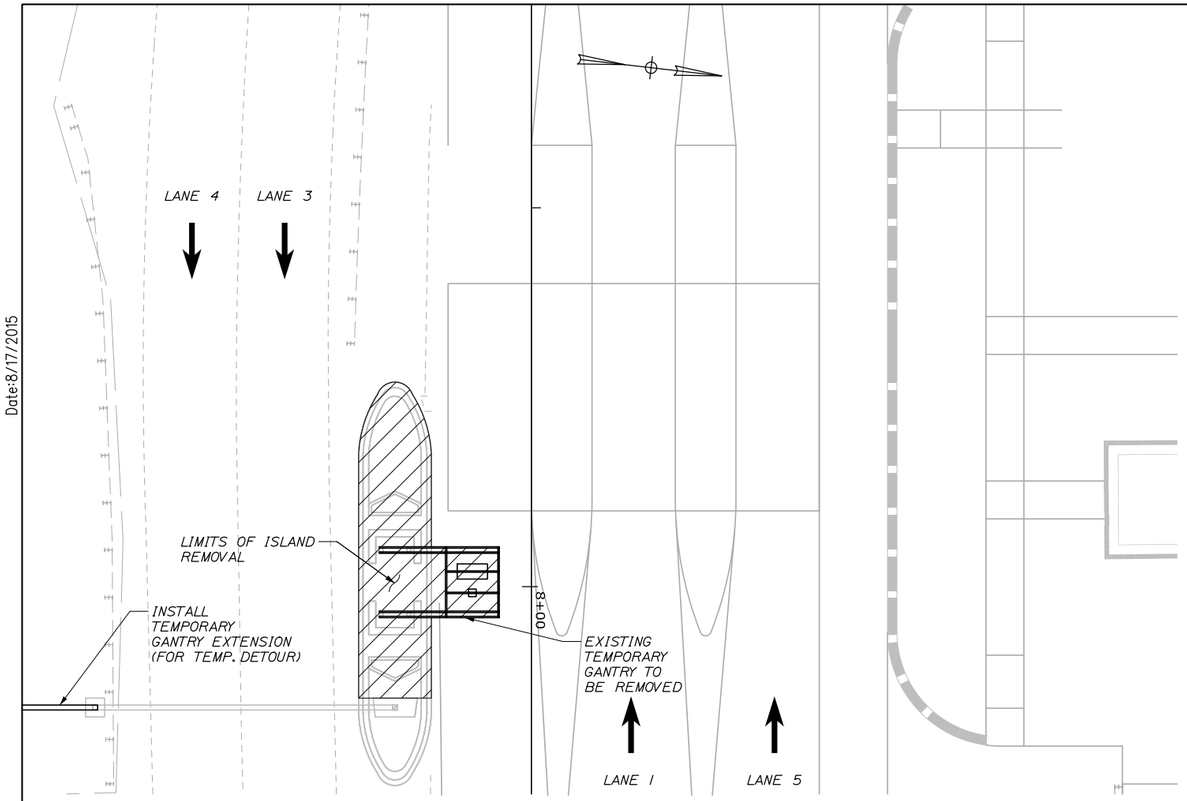

PHASE 3 PLAN

SCALE: 1" = 10'-0"

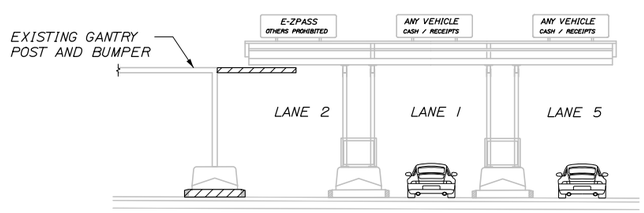

PHASE 3 ELEVATION

SCALE: 1" = 4'-0"

PHASE 3 WORK

1. REMOVE
   A. EXISTING GANTRY ISLAND TO LIMITS SHOWN
   B. EXISTING TEMPORARY GANTRY OVER LANE 2

2. INSTALL
   A. TEMPORARY GANTRY EXTENSION

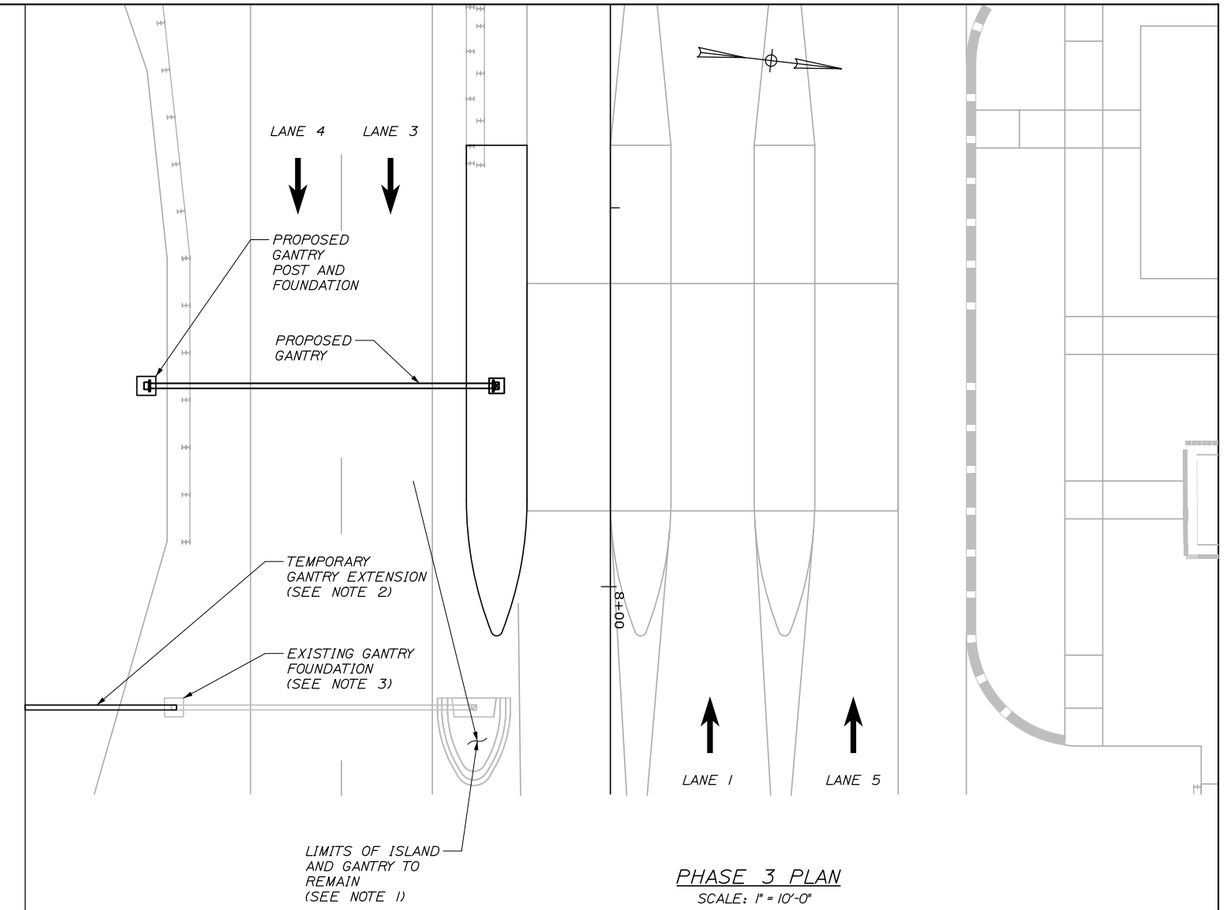

PHASE 3 PLAN

SCALE: 1" = 10'-0"

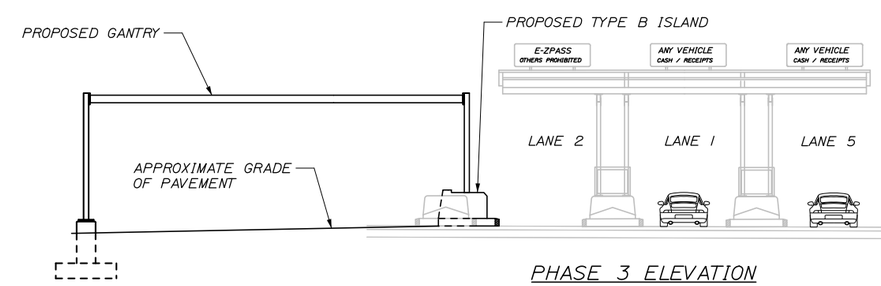

PHASE 3 ELEVATION

SCALE: 1" = 4'-0"

PHASE 3 WORK

1. INSTALL
   A. TEMPORARY GANTRY EXTENSION
   B. PROPOSED ISLAND
   C. PROPOSED GANTRY

2. REMOVE
   A. TEMPORARY GANTRY EXTENSION
   B. EXISTING GANTRY
   C. REMAINING EXISTING ISLAND

NOTES:

1. REMAINING ISLAND AND GANTRY SHALL BE REMOVED AFTER PROPOSED GANTRY IS ERECTED AND FUNCTIONAL.

2. TEMPORARY GANTRY SHALL BE USED UNTIL PROPOSED GANTRY IS COMPLETE.

3. EXISTING GANTRY FOUNDATION SHALL BE REMOVED AFTER ALL OTHER WORK IS COMPLETED

Filename: 050_Exit53_Structural Phase 3.dgn

Scale:

No.	Revision	By	Date

Designed by:

HNTB

CONSULTANT PROJECT MANAGER: R. Bruce Munger, P.E.

	By	Date		By	Date
Designed	AJF	08/15	Checked	RBM	08/15
Drawn	PEB	08/15	In Charge of	RAL	08/15

HNTB CORPORATION
340 County Road, Suite 6-C
Westbrook, ME 04092
TEL (207) 774-5155
FAX (207) 228-0909

MAINE TURNPIKE

THE GOLD STAR MEMORIAL HIGHWAY

MTA PROJECT MANAGER: William Yates

INTERCHANGE 53
TOLL PLAZA REPLACEMENT
PHASE 3
DEMOLITION & INSTALLATION

SHEET NUMBER: STR-04

CONTRACT:2015.09

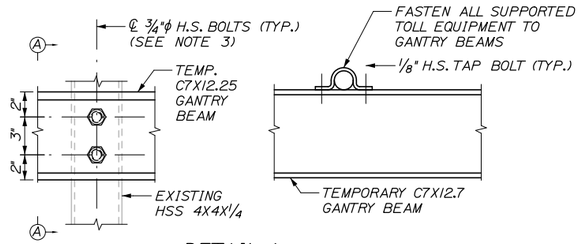

DETAIL A
NTS

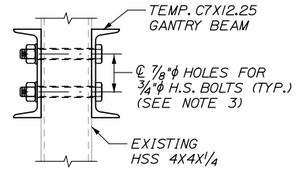

SECTION A-A
NTS

NOTES:

1. TEMPORARY GANTRY BEAMS SHALL BE INSTALLED AS HIGH AS PRACTICAL ON THE EXISTING CANOPY SUPPORTS. A MINIMUM VERTICAL CLEARANCE OF 14'-2" SHALL BE PROVIDED BENEATH THE TEMPORARY GANTRY BEAMS.

2. ALL DIMENSIONS SHOWN FOR EXISTING PLAZA ARE APPROXIMATE AND SHALL BE FIELD VERIFIED PRIOR TO SHOP DRAWING PREPARATION.

3. BOLT HOLES FOR TEMPORARY GANTRY BEAMS SHALL BE 7/8"ϕ FIELD DRILLED THROUGH THE CANOPY COLUMNS. BOLTS AND NUTS FOR TEMPORARY GANTRY BEAMS SHALL BE TIGHTENED TO SNUG-TIGHT CONDITION. INSTALL A JAM NUT AFTER TIGHTENING.

4. TO FORM TEMPORARY GANTRY, TWO CHANNELS MUST BE ATTACHED TO BOTH THE FRONT AND REAR POSTS AS SHOWN.

5. ALL TOLL EQUIPMENT, CONDUIT, AND WIRING NEEDED FOR FUNCTIONING E-ZPASS LANE TO REMAIN IN PLACE, SUPPORTED BY TEMPORARY GANTRY BEAMS.

Date:8/17/2015

Filename: 051_Exit53_StructuralPhasing_Details.dgn

Scale:

No.	Revision	By	Date

Designed by:

HNTB

CONSULTANT PROJECT MANAGER: R. Bruce Munger, P.E.

	By	Date		By	Date
Designed	BRG	08/15	Checked	AJF	08/15
Drawn	PEB	08/15	In Charge of	RAL	08/15

HNTB CORPORATION
340 County Road, Suite 6-C
Westbrook, ME 04092
TEL (207) 774-5155
FAX (207) 228-0909

MAINE TURNPIKE

THE GOLD STAR MEMORIAL HIGHWAY

MTA PROJECT MANAGER: William Yates

INTERCHANGE 53
TOLL PLAZA REPLACEMENT

STRUCTURAL PHASING DETAILS

SHEET NUMBER: STR-05

CONTRACT:2015.09

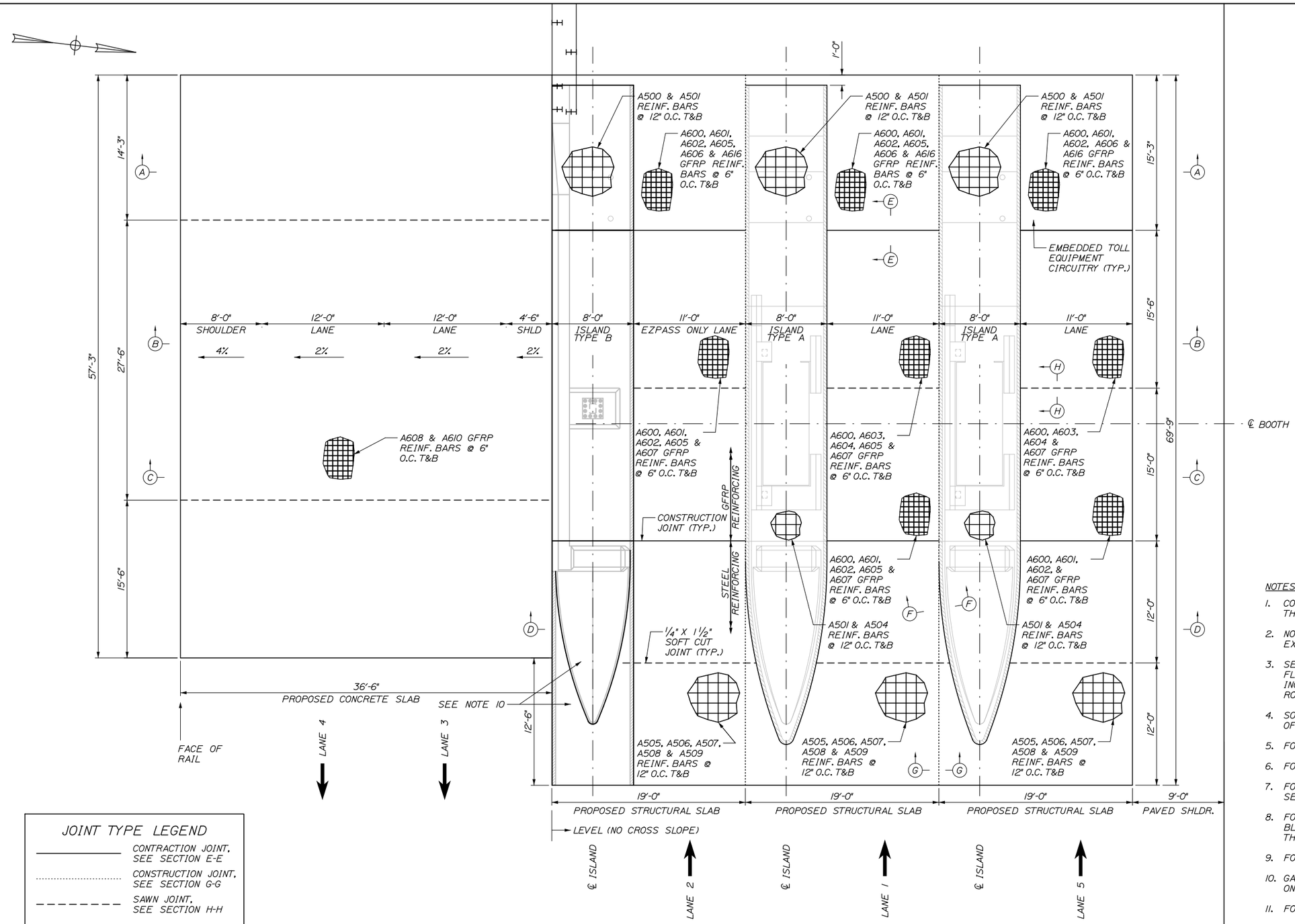

JOINT TYPE LEGEND

- CONTRACTION JOINT, SEE SECTION E-E
- CONSTRUCTION JOINT, SEE SECTION G-G
- SAWN JOINT, SEE SECTION H-H

NOTES:

1. CONSTRUCT ALL TRANSVERSE JOINTS PERPENDICULAR TO THE CENTERLINE.
2. NO HOLE SHALL BE DRILLED CLOSER THAN 3" FROM THE EXISTING EDGE OF CONCRETE.
3. SELF LEVELING ELASTOMERIC SEALANT SHALL BE SIKA FLEX 1A OR AN APPROVED EQUAL AND SHALL BE INCIDENTAL TO ITEM 502.262, STRUCTURAL CONCRETE ROADWAY SLAB ON GRADE.
4. SOFT CUT JOINTS SHALL BE CUT WITHIN 4 TO 6 HOURS OF INITIAL CONCRETE SET.
5. FOR SECTIONS A-A, B-B, C-C AND D-D SEE SHEET STR-07.
6. FOR SECTIONS E-E, F-F, G-G AND H-H SEE SHEET STR-08.
7. FOR REINFORCEMENT SCHEDULE OF STRUCTURAL SLAB, SEE SHEET STR-08.
8. FOR ISLAND SLAB, BOOTH ENCLOSURE AND BUMPER BLOCK REINFORCING AND DETAILS, SEE SHEETS STR-09 THROUGH STR-16.
9. FOR GANTRY FOUNDATION DETAILS, SEE SHEET STR-19.
10. GAS LINES NOT SHOWN FOR CLARITY. SEE SECTION D-D ON SHEETS STR-07 FOR LOCATION.
11. FOR ISLAND TYPE B REINFORCING, SEE SHEET STR-14.

Scale: 5 0 5 10

No.	Revision	By	Date

Designed by: HNTB

CONSULTANT PROJECT MANAGER: R. Bruce Munger, P.E.

	By	Date		By	Date
Designed	AGP	08/15	Checked	FAC	08/15
Drawn	KZT	08/15	In Charge of	RAL	08/15

HNTB CORPORATION
340 County Road, Suite 6-C
Westbrook, ME 04092
TEL (207) 774-5155
FAX (207) 228-0909

MAINE TURNPIKE

THE GOLD STAR MEMORIAL HIGHWAY

MTA PROJECT MANAGER: William Yates

INTERCHANGE 53 TOLL PLAZA REPLACEMENT

STRUCTURAL SLAB LAYOUT

SHEET NUMBER: STR-06

CONTRACT:2015.09

Date:8/17/2015

Filename: 052_Exit53-Pave Slab Layout.dgn

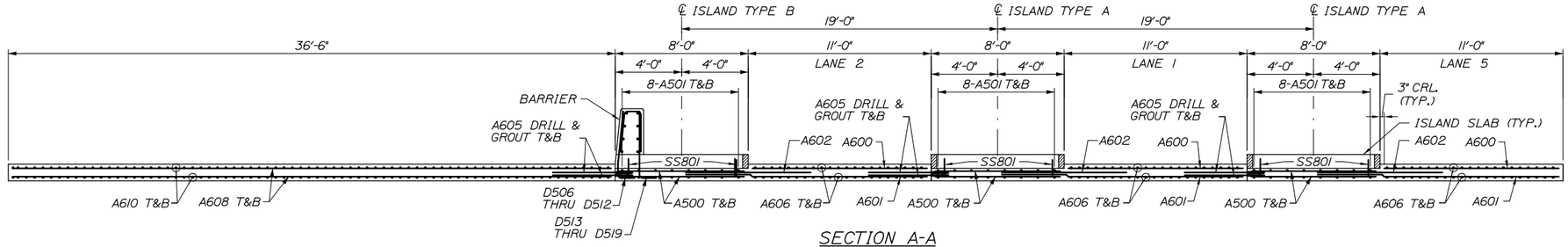

SECTION A-A

SCALE: 1/4" = 1'-0"

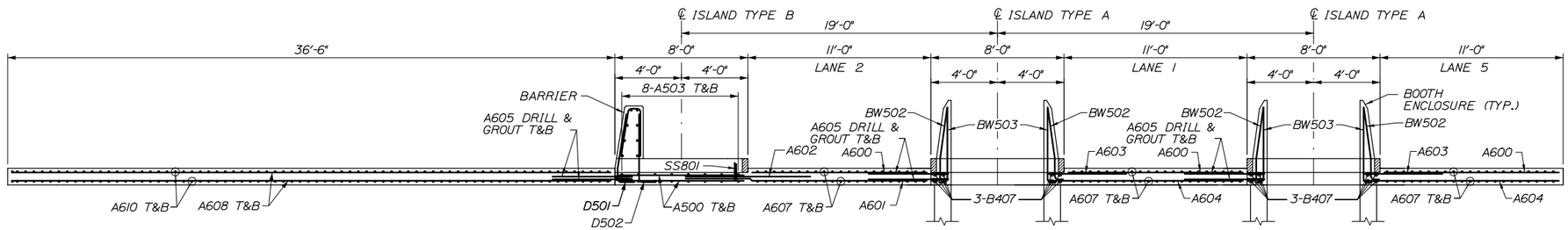

SECTION B-B

SCALE: 1/4" = 1'-0"

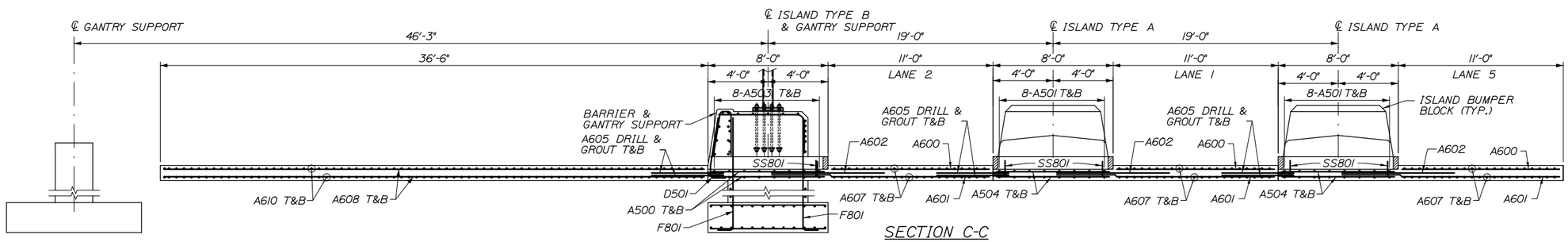

SECTION C-C

SCALE: 1/4" = 1'-0"

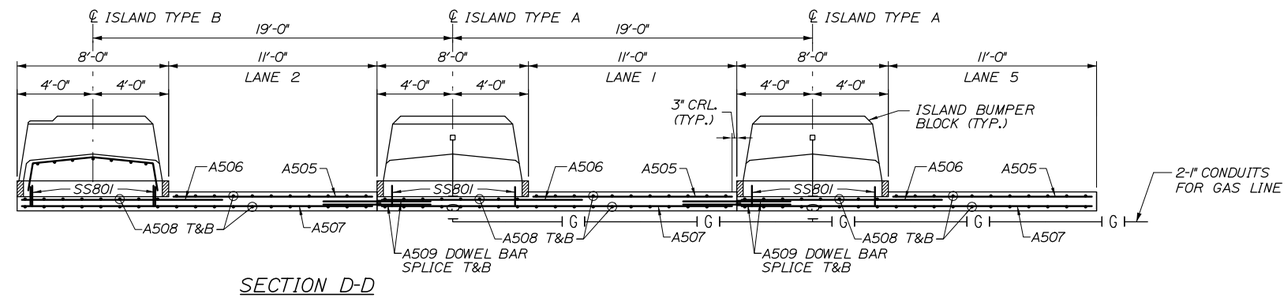

SECTION D-D

SCALE: 1/4" = 1'-0"

NOTES:

1. ALL STEEL REINFORCEMENT SHALL BE EPOXY COATED.
2. FOR STRUCTURAL SLAB PLAN, SEE SHEET STR-06.
3. FOR ISLAND SLAB, BOOTH ENCLOSURE, BUMPER BLOCK AND GANTRY SUPPORT DETAILS, SEE SHEETS STR-09 THROUGH STR-16.
4. CONDUIT AND JUNCTION BOXES FOR LP GAS LINE SHALL BE CAST INTO FRONT BOOTH BUMPER AND SHALL BE PAID FOR UNDER ITEM 800.60.

Date:8/17/2015

Filename: 053_Exit53-PaveSlabSects.dgn

Scale:

No.	Revision	By	Date

Designed by:

HNTB

CONSULTANT PROJECT MANAGER: R. Bruce Munger, P.E.

	By	Date		By	Date
Designed	AGP	08/15	Checked	FAC	08/15
Drawn	KZT	08/15	In Charge of	RAL	08/15

HNTB CORPORATION
340 County Road, Suite 6-C
Westbrook, ME 04092
TEL (207) 774-5155
FAX (207) 228-0909

MAINE TURNPIKE

THE GOLD STAR MEMORIAL HIGHWAY

MTA PROJECT MANAGER: William Yates

INTERCHANGE 53
TOLL PLAZA REPLACEMENT

STRUCTURAL SLAB SECTIONS

SHEET NUMBER: STR-07

CONTRACT:2015.09

INTERCHANGE 53 - PAVEMENT SLAB

MARK	SIZE	NO.	LENGTH	TYPE	A	B	C	D	E	F	G	INCR.	REMARKS
PAVEMENT SLAB													
A500	5	226	7' - 6"	STR									STEEL Transverse
A501	5	48	14' - 9"	STR									STEEL Longitudinal
A502	5	32	12' - 6"	STR									STEEL Longitudinal
A503	5	16	30' - 0"	STR									STEEL Longitudinal
A504	5	32	5' - 0"	STR									STEEL Longitudinal
A505	5	60	10' - 6"	STR									STEEL Transverse
A506	5	60	10' - 7"	STR									STEEL Transverse
A507	5	90	18' - 6"	STR									STEEL Transverse
A508	5	120	23' - 6"	STR									STEEL Longitudinal
A509	5	100	5' - 8"	113	2'-10"	2'-10"							DOWEL BAR SPLICE
SS801	8	276	1' - 0"	STR									SLAB DOWELL
SS802	8	21	2' - 2"	17		6"	1-8"	--					SLAB DOWELL END OF RAMP
SS803	8	7	2' - 8"	17		1'-0"	1-8"	--					
A600	6	270	10' - 6"	STR									GFRP Transverse
A601	6	220	14' - 3"	STR									GFRP Transverse
A602	6	220	7' - 6"	STR									GFRP Transverse
A603	6	50	4' - 9"	STR									GFRP Transverse
A604	6	50	12' - 3"	STR									GFRP Transverse
A605	6	608	4' - 9"	STR									GFRP Transverse DRILL & GROUT
A606	6	132	14' - 9"	STR									GFRP Longitudinal
A607	6	132	30' - 0"	STR									GFRP Longitudinal
A608	6	230	36' - 0"	STR									GFRP Transverse
A610	6	292	30' - 9"	STR									GFRP Longitudinal
A616	6	24	18' - 6"	STR									GFRP Transverse

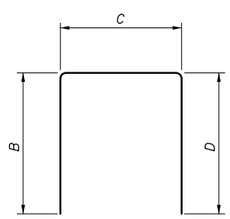

TYPE 17

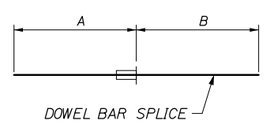

TYPE 113

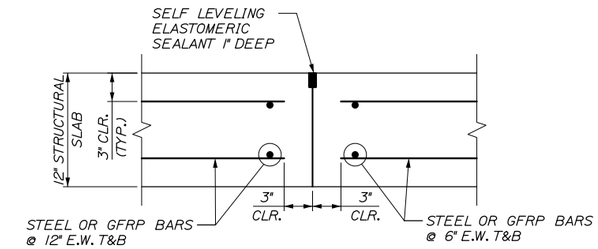

SECTION E-E
(CONTRACTION JOINT)
1½" = 1'-0"

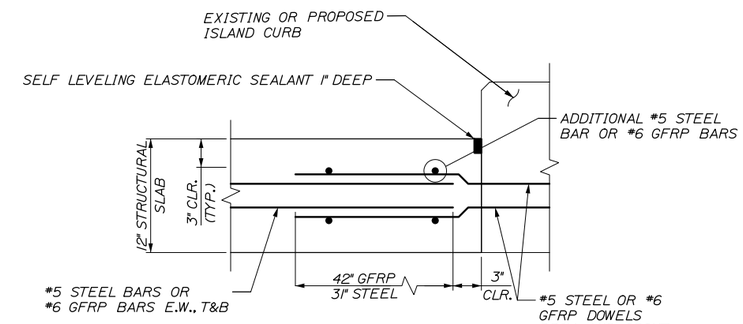

SECTION F-F
(CONSTRUCTION JOINT AT CURB)
1½" = 1'-0"

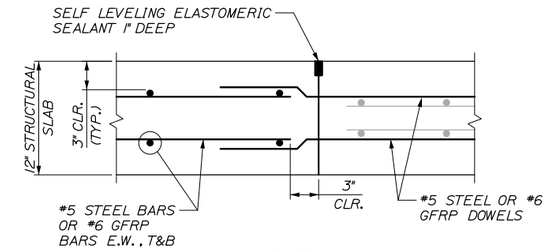

SECTION G-G
(CONSTRUCTION JOINT)
1½" = 1'-0"

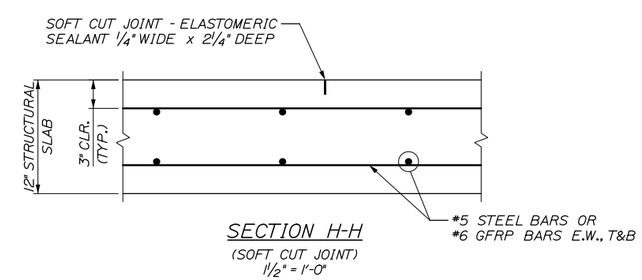

SECTION H-H
(SOFT CUT JOINT)
1½" = 1'-0"

NOTES:

1. CONSTRUCT ALL TRANSVERSE JOINTS PERPENDICULAR TO THE CENTERLINE.
2. NO HOLE SHALL BE DRILLED CLOSER THAN 3" FROM THE EXISTING EDGE OF CONCRETE.
3. SELF-LEVELING ELASTOMERIC SEALANT SHALL BE SIKA FLEX 1A OR ICSL AN APPROVED EQUAL AND SHALL BE INCIDENTAL TO ITEM 502.262, STRUCTURAL CONCRETE ROADWAY SLAB ON GRADE.
4. SOFT CUT JOINTS SHALL BE CUT WITHIN 4 TO 6 HOURS OF INITIAL CONCRETE SET.

Date:8/17/2015

Filename: 054_PaveSlabDetails.dgn

Scale: 5 0 5 10

No.	Revision	By	Date

Designed by: HNTB

CONSULTANT PROJECT MANAGER: R. Bruce Munger, P.E.

	By	Date		By	Date
Designed	AGP	08/15	Checked	FAC	08/15
Drawn	KZT	08/15	In Charge of	RAL	08/15

HNTB CORPORATION
340 County Road, Suite 6-C
Westbrook, ME 04092
TEL (207) 774-5155
FAX (207) 228-0909

MAINE TURNPIKE

THE GOLD STAR MEMORIAL HIGHWAY

MTA PROJECT MANAGER: William Yates

INTERCHANGE 53
TOLL PLAZA REPLACEMENT

STRUCTURAL SLAB TYPICAL DETAILS AND REINFORCEMENT SCHEDULE

SHEET NUMBER: STR-08

CONTRACT:2015.09

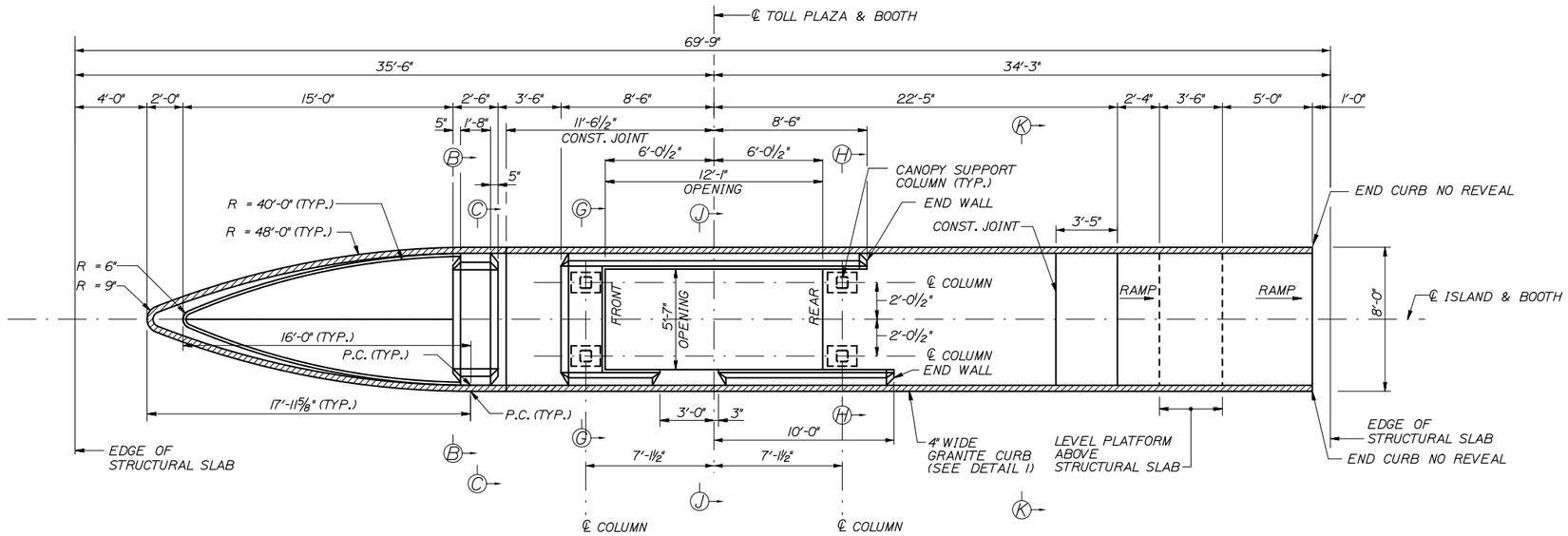

ISLAND TYPE A PLAN

SCALE: ¼" = 1'-0"

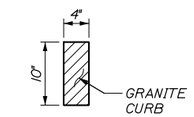

DETAIL 1

1" = 1'-0"

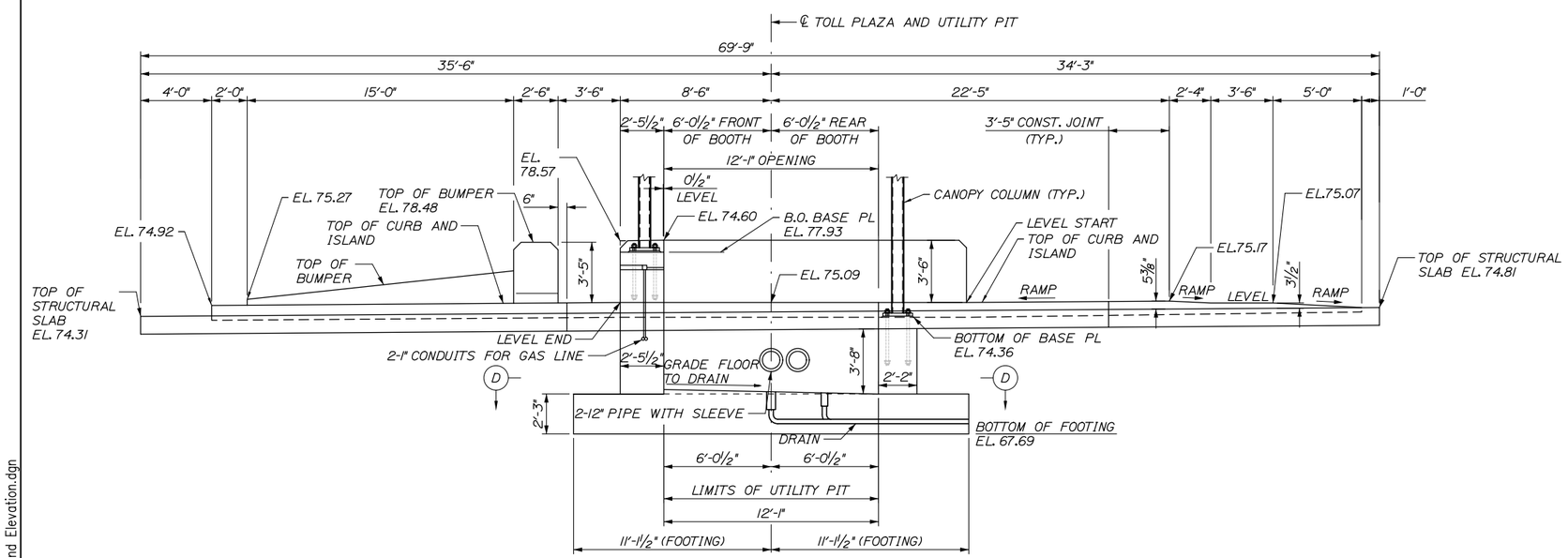

ISLAND TYPE A - PROFILE OF CONCRETE WORK

SCALE: ¼" = 1'-0"

NOTES:

1. FOR REINFORCING DETAILS OF ISLANDS A, SEE SHEETS STR-10 THROUGH STR-12.
2. FOR LOCATION OF ELECTRONIC TOLL COLLECTION EQUIPMENT, SEE ELECTRICAL PLANS.
3. FOR CONDUITS WITHIN ISLAND AND STRUCTURAL SLAB, SEE ELECTRICAL PLANS.
4. BARRIER WALL AND ISLAND SLABS TO HAVE ADDITIONAL CONSTRUCTION JOINTS OR SOFT CUT SPACED EVERY 10 FEET OR AS DIRECTED BY THE ENGINEER.
5. GRANITE CURBING JOINTS TO MATCH WITH ISLAND AND BARRIER JOINTS.
6. FOR SECTIONS B-B, C-C, G-G, H-H, J-J AND K-K, SEE SHEET STR-11.
7. GRANITE CURBING ON ISLAND SHALL BE PAID FOR UNDER ITEMS 609.11 VERTICAL CURB TYPE 1 AND 609.12 VERTICAL CURB TYPE 1 - CIRCULAR.

Scale:

No.	Revision	By	Date

Designed by:

HNTB

CONSULTANT PROJECT MANAGER: R. Bruce Munger, P.E.

	By	Date		By	Date
Designed	AGP	08/15	Checked	FAC	08/15
Drawn	KZT	08/15	In Charge of	RAL	08/15

HNTB CORPORATION
340 County Road, Suite 6-C
Westbrook, ME 04092
TEL (207) 774-5155
FAX (207) 228-0909

MAINE TURNPIKE

THE GOLD STAR MEMORIAL HIGHWAY

MTA PROJECT MANAGER: William Yates

INTERCHANGE 53
TOLL PLAZA REPLACEMENT

ISLAND TYPE A
PLAN AND ELEVATION

SHEET NUMBER: STR-09

CONTRACT: 2015.09

Date: 8/17/2015
Filename: 055_Exit53_Prop Island Layout and Elevation.dgn

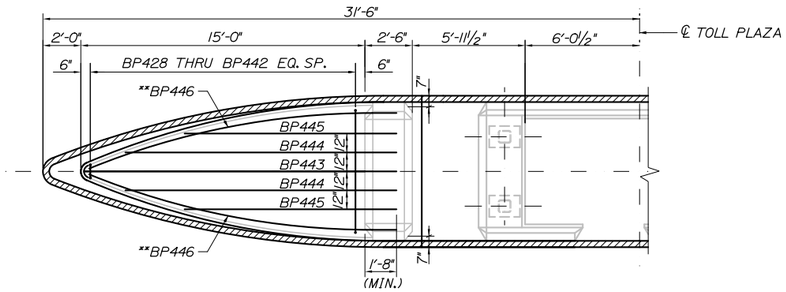

BUMPER REINFORCEMENT PLAN
SCALE: 1/4" = 1'-0"

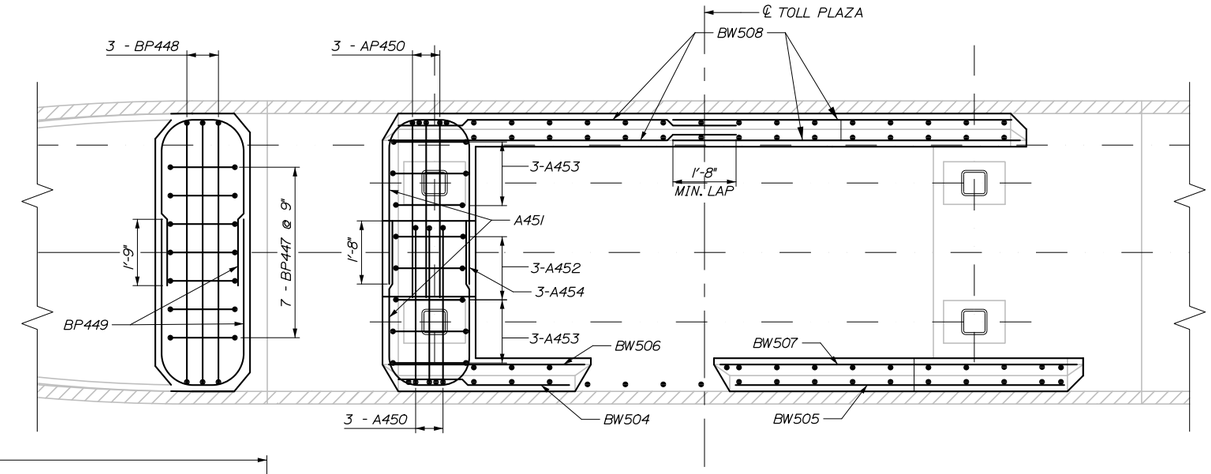

REINFORCEMENT LAYOUT AT BOOTH ENCLOSURE
SCALE: 1/2" = 1'-0"

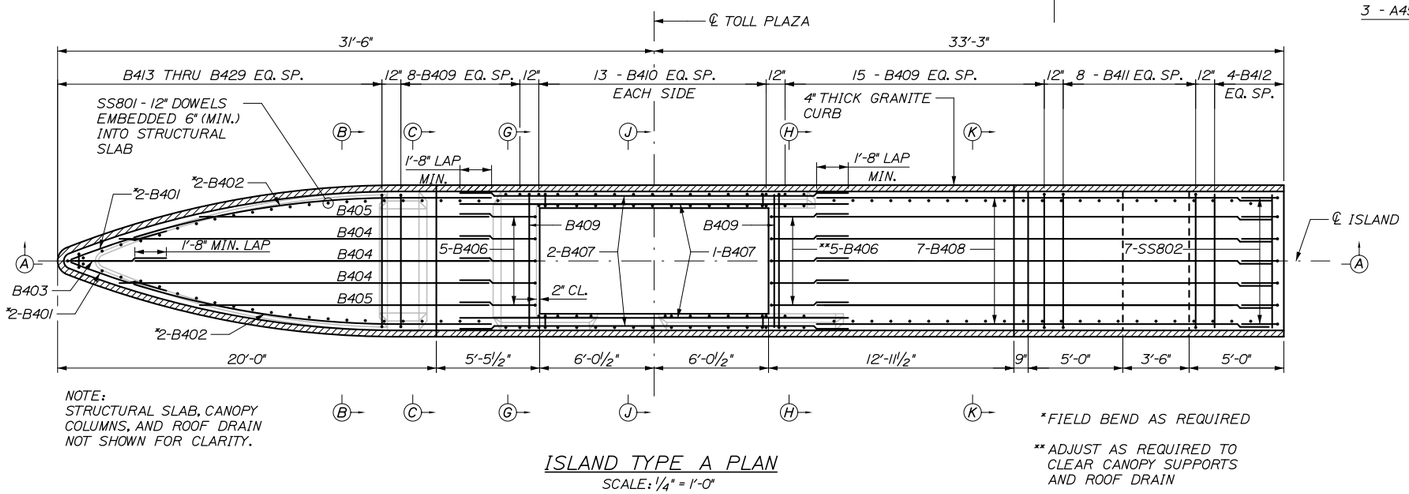

NOTE:
STRUCTURAL SLAB, CANOPY COLUMNS, AND ROOF DRAIN NOT SHOWN FOR CLARITY.

*FIELD BEND AS REQUIRED

** ADJUST AS REQUIRED TO CLEAR CANOPY SUPPORTS AND ROOF DRAIN

ISLAND TYPE A PLAN
SCALE: 1/4" = 1'-0"

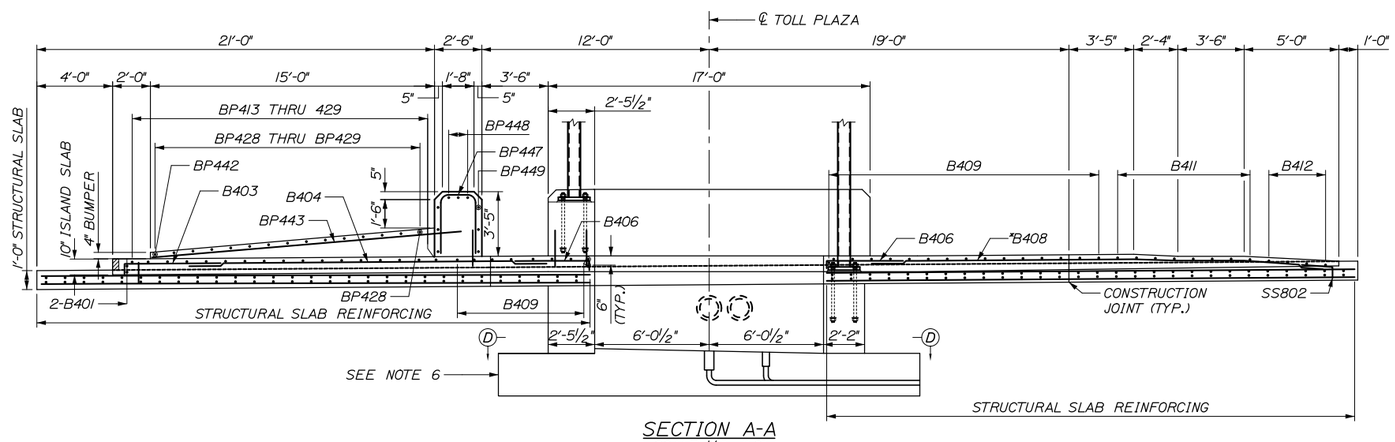

SECTION A-A
SCALE: 1/4" = 1'-0"

NOTES:

1. FOR PROFILE OF CONCRETE WORK, SEE SHEET STR-09.
2. FOR REINFORCEMENT OF ISLAND SLAB, SEE SHEETS STR-10.
3. FOR ISLAND SECTIONS B-B, C-C, D-D, G-G, H-H AND K-K, SEE SHEET STR-11.
4. ALL ISLAND SLAB, BOOTH ENCLOSURE, AND BUMPER REINFORCING SHALL BE EPOXY COATED.
5. EXPOSED ISLAND CONCRETE TO BE WATERPROOFED (SEE SPECIFICATIONS).
6. FOR PIT REINFORCEMENT, SEE SHEET STR-11.

Scale:

No.	Revision	By	Date

Designed by: HNTB

CONSULTANT PROJECT MANAGER: R. Bruce Munger, P.E.

	By	Date		By	Date
Designed	AGP	08/15	Checked	FAC	08/15
Drawn	KZT	08/15	In Charge of	RAL	08/15

HNTB CORPORATION
340 County Road, Suite 6-C
Westbrook, ME 04092
TEL (207) 774-5155
FAX (207) 228-0909

MAINE TURNPIKE

THE GOLD STAR MEMORIAL HIGHWAY

MTA PROJECT MANAGER: William Yates

INTERCHANGE 53
TOLL PLAZA REPLACEMENT

ISLAND TYPE A DETAILS

SHEET NUMBER: STR-10

CONTRACT:2015.09

Date:8/17/2015

Filename: 056_Exit53_Prop Island Details.dgn

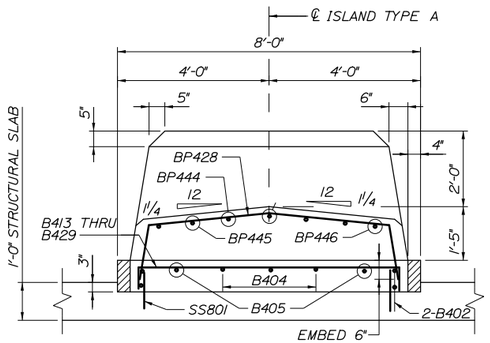

SECTION B-B
SCALE: ½" = 1'-0"

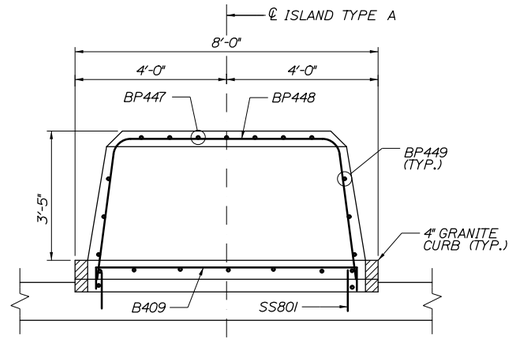

SECTION C-C
SCALE: ½" = 1'-0"

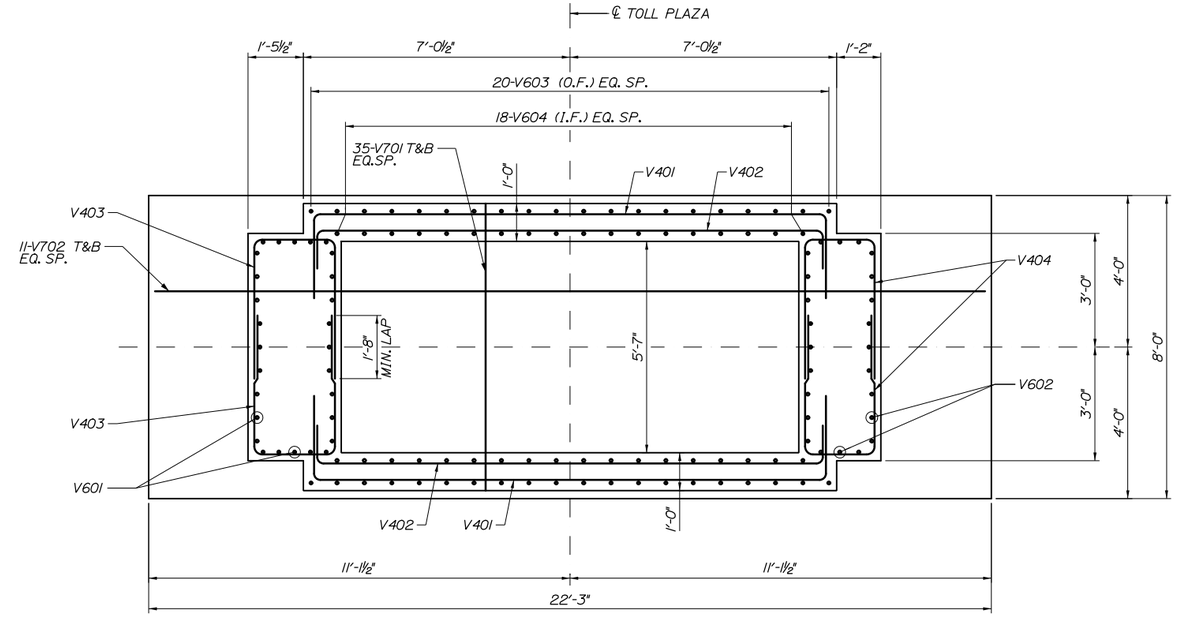

SECTION D-D
SCALE: ½" = 1'-0"

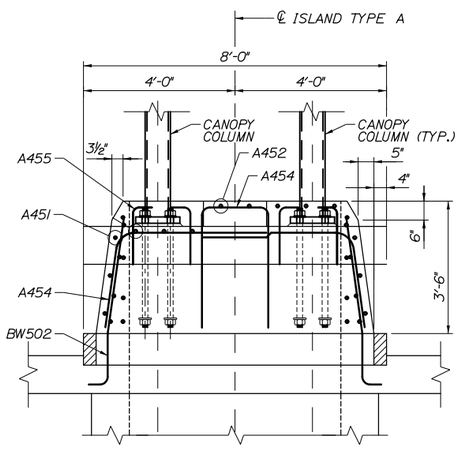

SECTION G-G
SCALE: ½" = 1'-0"

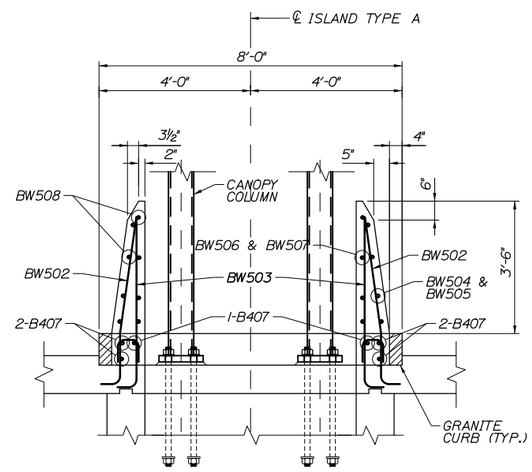

SECTION H-H
SCALE: ½" = 1'-0"

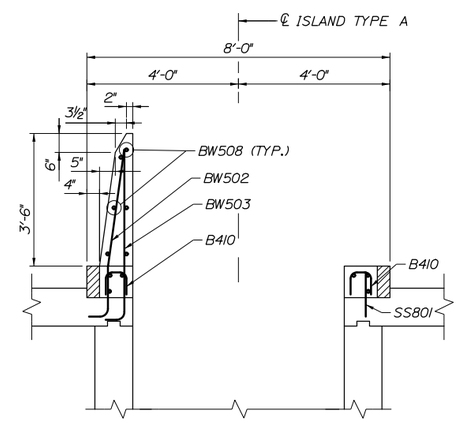

SECTION J-J
SCALE: ½" = 1'-0"

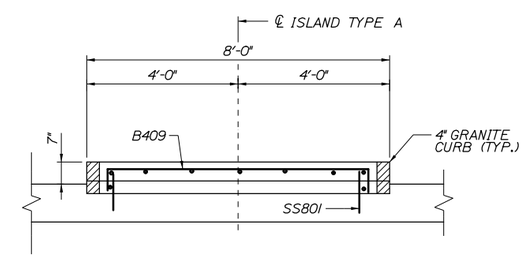

SECTION K-K
SCALE: ½" = 1'-0"

NOTES:

1. FOR ISLAND SLAB, BOOTH ENCLOSURE AND BUMPER BLOCK REINFORCEMENT SCHEDULE, SEE SHEET STR-12.

2. FOR SECTION LOCATIONS, SEE SHEET STR-09 AND STR-10.

Date: 8/28/2015

Filename: 057_Exit53_Prop Island Sects.dgn

Scale: AS NOTED

No.	Revision	By	Date

Designed by: HNTB

CONSULTANT PROJECT MANAGER: R. Bruce Munger, P.E.

	By	Date		By	Date
Designed	AGP	08/15	Checked	FAC	08/15
Drawn	KZT	08/15	In Charge of	RAL	08/15

HNTB CORPORATION
340 County Road, Suite 6-C
Westbrook, ME 04092
TEL (207) 774-5155
FAX (207) 228-0909

MAINE TURNPIKE

THE GOLD STAR MEMORIAL HIGHWAY

MTA PROJECT MANAGER: William Yates

INTERCHANGE 53
TOLL PLAZA REPLACEMENT

ISLAND TYPE A SECTIONS

SHEET NUMBER: STR-11

CONTRACT: 2015.09

INTERCHANGE 53 - TOLL ISLAND A

MARK	SIZE	NO.	LENGTH	TYPE	A	B	C	D	E	F	G	INCR.	REMARKS
ISLAND - SLAB (TOTAL FOR 2 SLABS)													
B401	4	8	5' - 6"	STR									* FIELD BEND AS REQUIRED
B402	4	8	19' - 6"	STR									* FIELD BEND AS REQUIRED
B403	4	2	6' - 0"	17		6"	5'-6"						
B404	4	6	19' - 6"	STR									
B405	4	4	15' - 6"	STR									
B406	4	20	6' - 0"	17		6"	5'-6"						
B407	4	12	21' - 0"	STR									
B408	4	14	24' - 6"	STR									
B409	4	72	8' - 0"	17		6"	7'-0"	6"					
B410	4	52	1' - 7"	17		6"	6 1/2"	6"					
B411	4	16	7' - 6"	17		3"	7'-0"	3"					
B412	4	8	7' - 0"	STR									
B413	4	2	7' - 11"	17		6"	6'-11"	6"					
B414	4	2	7' - 10"	17		6"	6'-10"	6"					
B415	4	2	7' - 9"	17		6"	6'-9"	6"					
B416	4	2	7' - 8"	17		6"	6'-8"	6"					
B417	4	2	7' - 6"	17		6"	6'-6"	6"					
B418	4	2	7' - 3"	17		6"	6'-3"	6"					
B419	4	2	7' - 0"	17		6"	6'-0"	6"					
B420	4	2	6' - 8"	17		6"	5'-8"	6"					
B421	4	2	6' - 4"	17		6"	5'-4"	6"					
B422	4	2	5' - 11"	17		6"	4'-11"	6"					
B423	4	2	5' - 5"	17		6"	4'-5"	6"					
B424	4	2	5' - 0"	17		6"	4'-0"	6"					
B425	4	2	4' - 5"	17		6"	3'-5"	6"					
B426	4	2	3' - 10"	17		6"	2'-10"	6"					
B427	4	2	3' - 3"	17		6"	2'-3"	6"					
B428	4	2	2' - 6"	17		6"	1'-6"	6"					
B429	4	2	1' - 10"	17		6"	10"	6"					

MARK	SIZE	NO.	LENGTH	TYPE	A	B	C	D	E	F	G	INCR.	REMARKS
ISLAND - FRONT BUMPER BLOCK (TOTAL FOR 2 BLOCKS)													
BP428	4	4	9' - 11"	17D	4 1/2"	1'-6"	2 3/4"	3'-3 1/2"					
BP429	4	4	9' - 9"	17D	4 1/4"	1'-5"	2 1/2"	3'-3"					
BP430	4	4	9' - 6"	17D	4 1/4"	1'-4"	2 1/2"	3'-2"					
BP431	4	2	9' - 0"	17D	4"	1'-3"	2 1/4"	3'-0 1/2"					
BP432	4	2	8' - 9"	17D	4"	1'-3"	2 1/4"	2'-11 1/2"					
BP433	4	2	8' - 3"	17D	3 3/4"	1'-2"	2"	2'-9 1/2"					
BP434	4	2	7' - 9"	17D	3 1/2"	1'-1"	2"	2'-7"					
BP435	4	2	7' - 3"	17D	3 1/4"	1'-0"	1 3/4"	2'-5"					
BP436	4	2	6' - 8"	17D	3"	1'-0"	1 3/4"	2'-2"					
BP437	4	2	6' - 0"	17D	2 3/4"	11"	1 1/2"	1'-11"					
BP438	4	2	5' - 4"	17D	2 1/4"	10"	1 1/2"	1-7 1/2"					
BP439	4	2	4' - 6"	17D	1 3/4"	10"	1 1/2"	1'- 3 1/2"					
BP440	4	2	3' - 9"	17D	1 1/2"	9"	1 1/4"	11 1/2"					
BP441	4	2	2' - 11"	17D	1"	8 1/2"	1 1/4"	7"					
BP442	4	2	2' - 1"	17D	--	8 1/2"	--	2"					
BP443	4	2	16' - 5"	STR									
BP444	4	4	14' - 4"	STR									
BP445	4	4	11' - 2"	STR									
BP446	4	4	16' - 8"	STR									* FIELD BEND AS REQUIRED
BP447	4	14	8' - 3"	17A		3'-1"	2'-1"	3'-1"					R=5 1/2" (INSIDE RADIUS)
BP448	4	6	11' - 4"	17B	3'-0"	5'-0"	3'-0"	6'-10"					R=5 1/2" (INSIDE RADIUS)
BP449	4	12	11' - 3"	17A		4'-6"	2'-2"	4'-6"					R=9 1/2" (INSIDE RADIUS)

INTERCHANGE 53 - TOLL ISLAND A

MARK	SIZE	NO.	LENGTH	TYPE	A	B	C	D	E	F	G	INCR.	REMARKS
ISLAND - BOOTH ENCLOSURE AND BARRIER WALL (TOTAL FOR 2 SETS)													
A450	4	12	6' - 3"	17C	2'-6"	4 1/2"	3'-8"						R=5 1/2" (INSIDE RADIUS)
A451	4	12	10' - 8"	17A		4'-3"	2'-1 1/2"	4'-3"					R=8 1/2" (INSIDE RADIUS)
A452	4	6	8' - 2"	17A		3'-1"	2'-0"	3'-1"					R=5 1/2" (INSIDE RADIUS)
A453	4	12	6' - 10"	17A		2'-5"	2'-0"	2'-5"					R=5 1/2" (INSIDE RADIUS)
A454	4	6	8' - 3"	17		3'-3"	1'-9"	3'-3"					
A455	4	24	2' - 0"	17		1'-6"	6"	--					GRADE 40, FIELD BEND
			-										
BW502	5	70	5' - 4"	17E	1'-0"	1'-4"	3'-0"	5 1/2"					
BW503	5	62	5' - 5"	17		1'-0"	4'-5"	--					
BW504	5	8	4' - 4"	STR									
BW505	5	8	8' - 9"	STR									
BW506	5	8	5' - 2"	STR									
BW507	5	8	9' - 5"	STR									
BW508	5	32	9' - 2"	STR									
			-										
			-										
			-										
			-										
			-										
			-										
			-										
			-										
			-										
			-										
			-										
			-										

MARK	SIZE	NO.	LENGTH	TYPE	A	B	C	D	E	F	G	INCR.	REMARKS
ISLAND - UTILITY VAULT (TOTAL FOR 2 SETS)													
V401	4	16	18' - 7"	17		2'-6"	13'-7"	2'-6"					
V402	4	16	15' - 7"	17		1'-0"	13'-7"	1'-0"					
V403	4	40	10' - 2"	17		4'-0"	2'-2'	4'-0"					
V404	4	40	9' - 10"	17		4'-0"	1'-10"	4'-0"					
V601	6	56	11' - 7"	17		1'-0"	10'-7"	--					
V602	6	48	7' - 3"	17		1'-0"	6'-3"	--					
V603	6	80	7' - 3"	17		1'-0"	6'-3"	--					
V604	6	72	6' - 0"	STR									
V701	7	140	7' - 7"	STR									
V702	7	44	21' - 9"	STR									

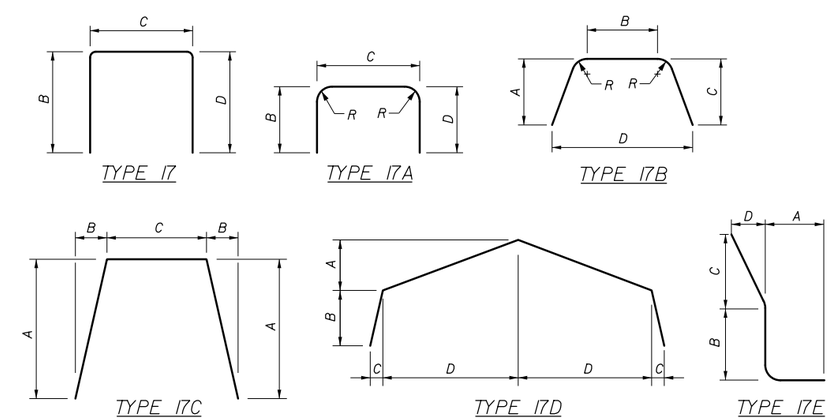

Date:8/28/2015

Filename: 058_Exit53_Island A Rebar Schedule.dgn

Scale: AS NOTED

No.	Revision	By	Date

Designed by: HNTB

CONSULTANT PROJECT MANAGER: R. Bruce Munger, P.E.

	By	Date		By	Date
Designed	AGP	08/15	Checked	FAC	08/15
Drawn	KZT	08/15	In Charge of	RAL	08/15

HNTB CORPORATION
340 County Road, Suite 6-C
Westbrook, ME 04092
TEL (207) 774-5155
FAX (207) 228-0909

MAINE TURNPIKE

THE GOLD STAR MEMORIAL HIGHWAY

MTA PROJECT MANAGER: William Yates

INTERCHANGE 53
TOLL PLAZA REPLACEMENT
ISLAND TYPE A
REINFORCEMENT SCHEDULE

SHEET NUMBER: STR-12

CONTRACT:2015.09

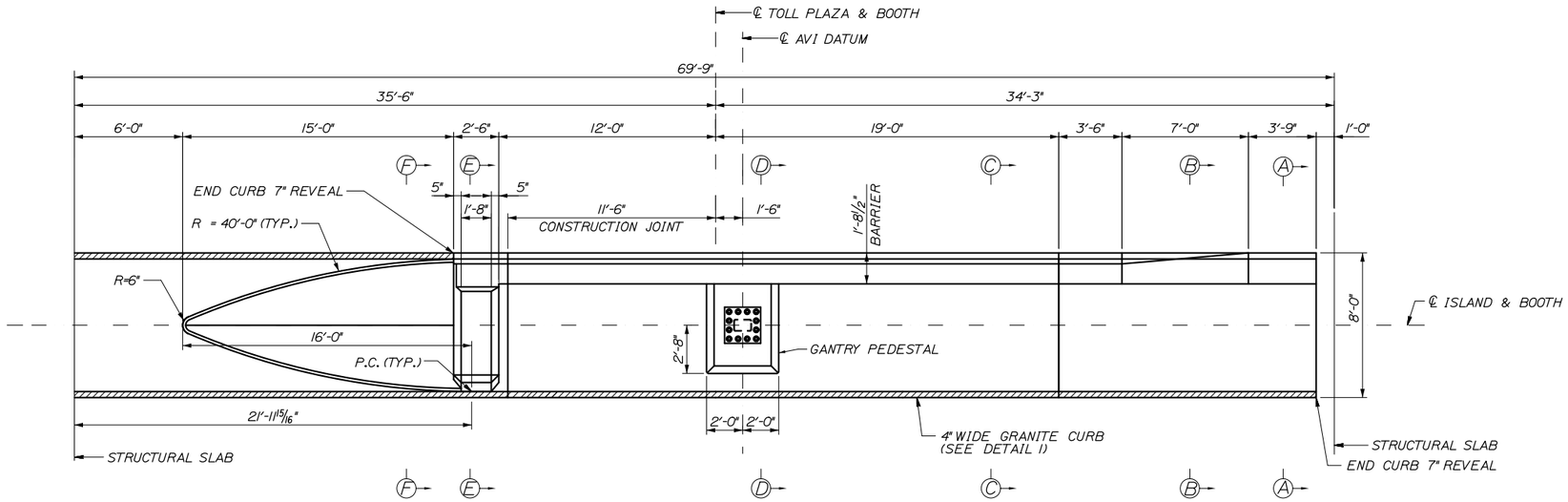

ISLAND TYPE B PLAN
SCALE: 1/4" = 1'-0"

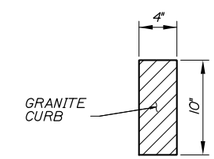

DETAIL 1
SCALE: 1/2" = 1'-0"

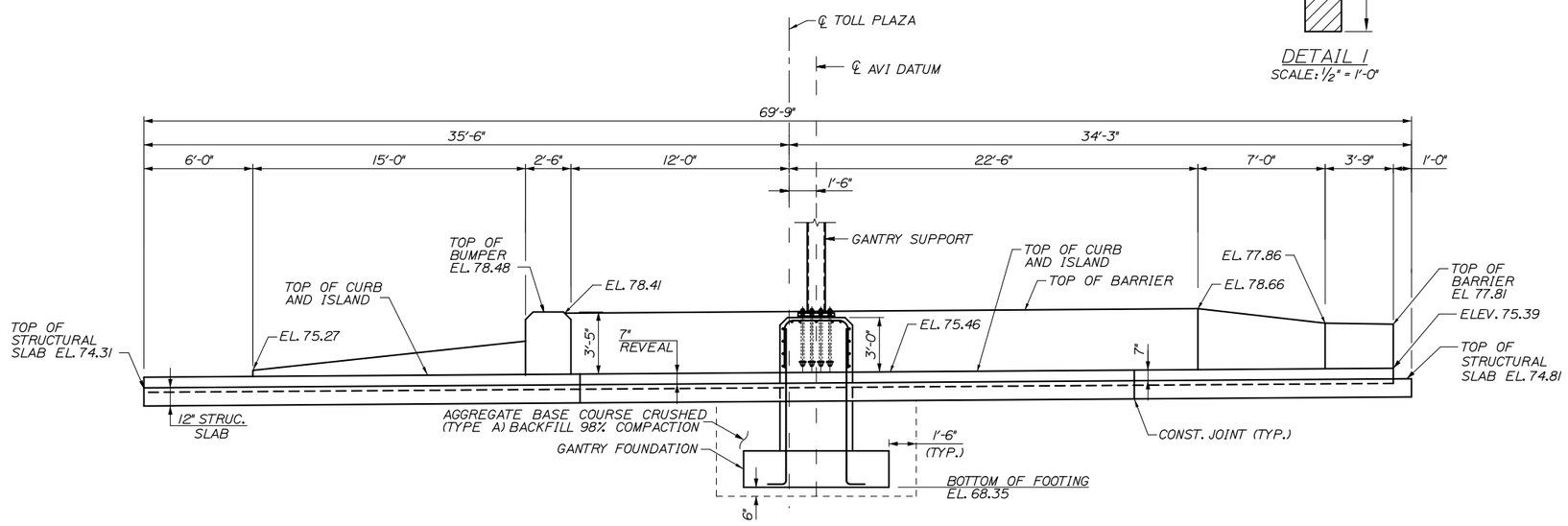

ISLAND TYPE B - PROFILE OF CONCRETE WORK
SCALE: 1/4" = 1'-0"

NOTES:

1. FOR REINFORCING DETAILS OF ISLAND, SEE SHEETS STR-14, STR-15 AND STR-16.
2. FOR LOCATION OF ELECTRONIC TOLL COLLECTION EQUIPMENT, SEE ELECTRICAL PLANS.
3. FOR CONDUITS WITHIN ISLAND AND STRUCTURAL SLAB, SEE ELECTRICAL PLANS.
4. BARRIER WALL AND ISLAND SLABS TO HAVE ADDITIONAL CONSTRUCTION JOINTS OR SOFT CUT JOINTS SPACED EVERY 10 FOOT OR AS DIRECTED BY THE ENGINEER.
5. GRANITE CURBING JOINTS TO MATCH WITH ISLAND AND BARRIER JOINTS.
6. GRANITE CURBING ON ISLAND SHALL BE PAID FOR UNDER ITEMS 609.11 VERTICAL CURB TYPE 1 AND 609.12 VERTICAL CURB TYPE 1 - CIRCULAR.
7. FOR SECTIONS A-A, B-B, C-C, D-D, E-E AND F-F, SEE SHEET STR-15.

Date:8/17/2015

Filename: 059_Exit53_Island B Layout.dgn

Scale: AS NOTED

No.	Revision	By	Date

Designed by: HNTB

CONSULTANT PROJECT MANAGER: R. Bruce Munger, P.E.

	By	Date		By	Date
Designed	AGP	08/15	Checked	FAC	08/15
Drawn	KZT	08/15	In Charge of	RAL	08/15

HNTB CORPORATION
340 County Road, Suite 6-C
Westbrook, ME 04092
TEL (207) 774-5155
FAX (207) 228-0909

MAINE TURNPIKE

THE GOLD STAR MEMORIAL HIGHWAY

MTA PROJECT MANAGER: William Yates

INTERCHANGE 53
TOLL PLAZA REPLACEMENT

ISLAND TYPE B LAYOUT

SHEET NUMBER: STR-13

CONTRACT:2015.09

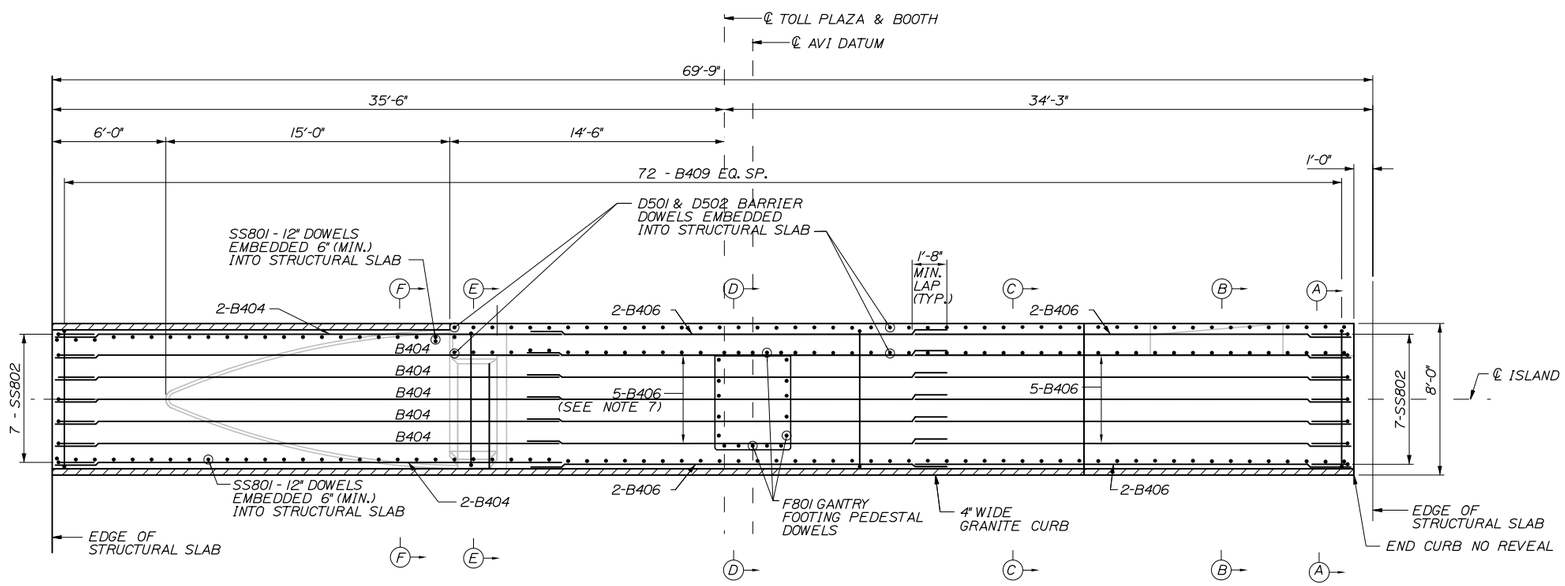

ISLAND TYPE B PLAN

SCALE: 1/4" = 1'-0"

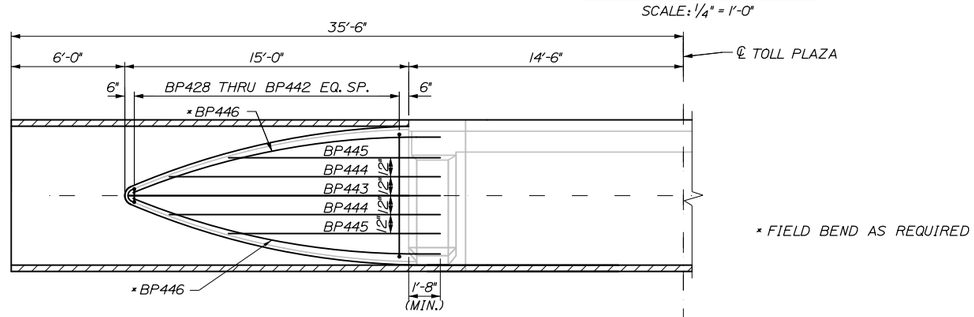

BUMPER LOWER REINFORCEMENT PLAN

SCALE: 1/4" = 1'-0"

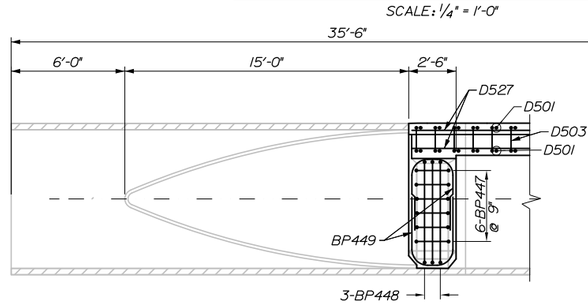

BUMPER UPPER REINFORCEMENT PLAN

SCALE: 1/4" = 1'-0"

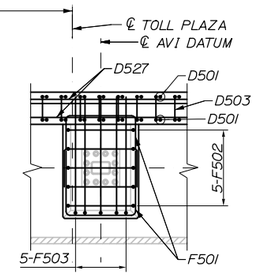

GANTRY PEDESTAL REINFORCEMENT PLAN

SCALE: 1/4" = 1'-0"

NOTES:

1. FOR PROFILE OF CONCRETE WORK, SEE SHEET STR-13.
2. FOR REINFORCEMENT OF ISLAND SLAB, SEE SHEET STR-15.
3. FOR ISLAND SECTIONS A-A, B-B, C-C, D-D, E-E AND F-F, SEE SHEET STR-15.
4. ALL ISLAND SLAB, BOOTH ENCLOSURE, AND BUMPER REINFORCING SHALL BE EPOXY COATED.
5. EXPOSED ISLAND CONCRETE TO BE WATERPROOFED (SEE SPECIFICATIONS).
6. GRANITE CURBING ON ISLAND SHALL BE PAID FOR UNDER ITEMS 609.11 VERTICAL CURB TYPE 1 AND 609.12 VERTICAL CURB TYPE 1 - CIRCULAR.
7. FIELD CUT B406 AND B409 BARS TO CLEAR GANTRY PEDESTAL.

Date: 8/28/2015

Filename: 060_Exit53_Island_B_Details.dgn

Scale: AS NOTED

No.	Revision	By	Date

Designed by: HNTB

CONSULTANT PROJECT MANAGER: R. Bruce Munger, P.E.

	By	Date		By	Date
Designed	AGP	08/15	Checked	FAC	08/15
Drawn	KZT	08/15	In Charge of	RAL	08/15

HNTB CORPORATION
340 County Road, Suite 6-C
Westbrook, ME 04092
TEL (207) 774-5155
FAX (207) 228-0909

MAINE TURNPIKE

THE GOLD STAR MEMORIAL HIGHWAY

MTA PROJECT MANAGER: William Yates

INTERCHANGE 53
TOLL PLAZA REPLACEMENT

ISLAND TYPE B DETAILS

SHEET NUMBER: STR-14

CONTRACT: 2015.09

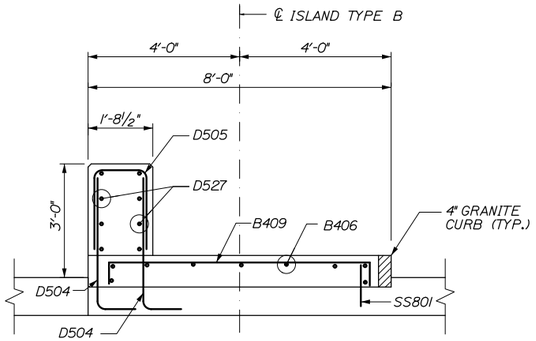

SECTION A-A
SCALE: ½" = 1'-0"

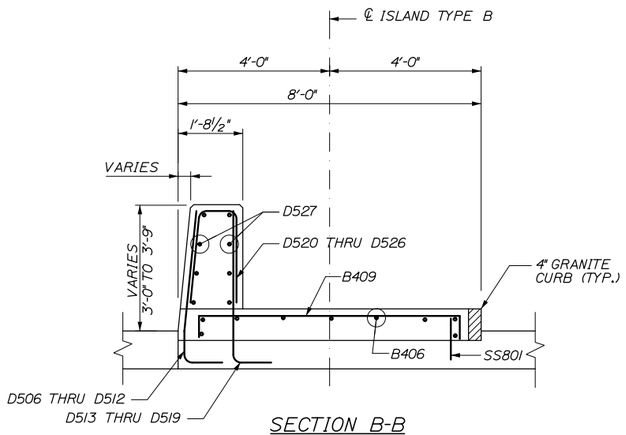

SECTION B-B
SCALE: ½" = 1'-0"

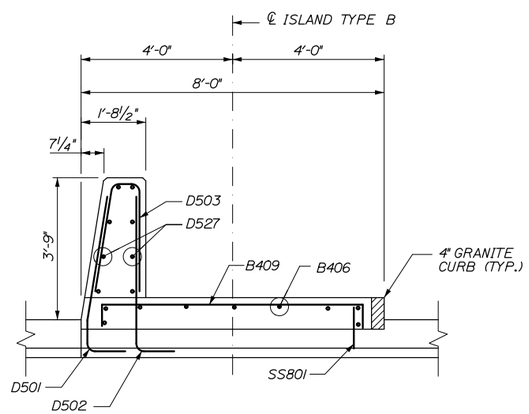

SECTION C-C
SCALE: ½" = 1'-0"

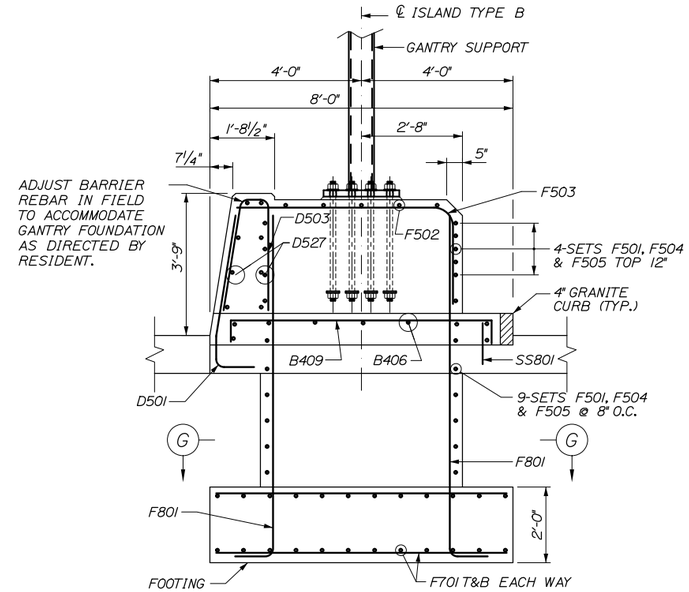

SECTION D-D
SCALE: ½" = 1'-0"

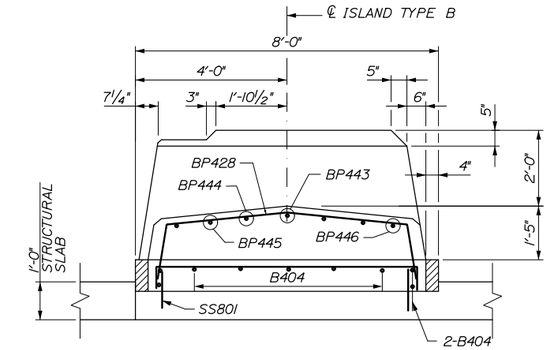

SECTION F-F
SCALE: ½" = 1'-0"

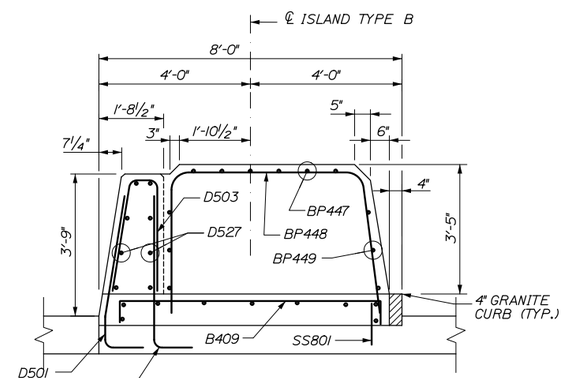

SECTION E-E
SCALE: ½" = 1'-0"

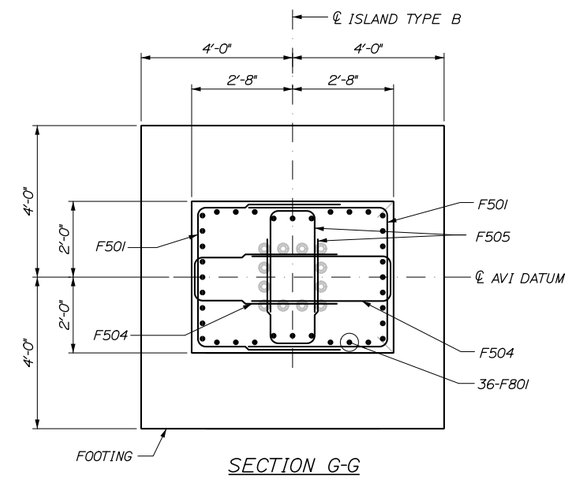

SECTION G-G
SCALE: ½" = 1'-0"

Date:8/17/2015

Filename: 061_Exit53_Island B Sections.dgn

Scale: AS NOTED			
No.	Revision	By	Date

Designed by: HNTB

CONSULTANT PROJECT MANAGER: R. Bruce Munger, P.E.

	By	Date		By	Date
Designed	AGP	08/15	Checked	FAC	08/15
Drawn	KZT	08/15	In Charge of	RAL	08/15

HNTB CORPORATION
340 County Road, Suite 6-C
Westbrook, ME 04092
TEL (207) 774-5155
FAX (207) 228-0909

MAINE TURNPIKE

THE GOLD STAR MEMORIAL HIGHWAY

MTA PROJECT MANAGER: William Yates

INTERCHANGE 53
TOLL PLAZA REPLACEMENT

ISLAND TYPE B SECTIONS

SHEET NUMBER: STR-15

CONTRACT:2015.09

61OF 95

INTERCHANGE 53 - TOLL ISLAND B

MARK	SIZE	NO.	LENGTH	TYPE	A	B	C	D	E	F	G	INCR.	REMARKS
ISLAND - SLAB													
B404	4	9	27' - 0"	STR									
B406	4	18	23' - 0"	STR									
B409	4	55	8' - 0"	17		6"	7'-3"	6"					

MARK	SIZE	NO.	LENGTH	TYPE	A	B	C	D	E	F	G	INCR.	REMARKS
ISLAND - FRONT BUMPER BLOCK													
BP428	4	2	9' - 11"	17D	4 1/2"	1'-6"	2 3/4"	3'-3 1/2"					
BP429	4	2	9' - 9"	17D	4 1/4"	1'-5"	2 1/2"	3'-3"					
BP430	4	2	9' - 6"	17D	4 1/4"	1'-4"	2 1/2"	3'-2"					
BP431	4	1	9' - 0"	17D	4"	1'-3"	2 1/4"	3'-0 1/2"					
BP432	4	1	8' - 9"	17D	4"	1'-3"	2 1/4"	2'-11 1/2"					
BP433	4	1	8' - 3"	17D	3 3/4"	1'-2"	2"	2'-9 1/2"					
BP434	4	1	7' - 9"	17D	3 1/2"	1'-1"	2"	2'-7"					
BP435	4	1	7' - 3"	17D	3 1/4"	1'-0"	1 3/4"	2'-5"					
BP436	4	1	6' - 8"	17D	3"	1'-0"	1 3/4"	2'-2"					
BP437	4	1	6' - 0"	17D	2 3/4"	11"	1 1/2"	1'-11"					
BP438	4	1	5' - 4"	17D	2 1/4"	10"	1 1/2"	1-7 1/2"					
BP439	4	1	4' - 6"	17D	1 3/4"	10"	1 1/2"	1'- 3 1/2"					
BP440	4	1	3' - 9"	17D	1 1/2"	9"	1 1/4"	11 1/2"					
BP441	4	1	2' - 11"	17D	1"	8 1/2"	1 1/4"	7"					
BP442	4	1	2' - 1"	17D	--	8 1/2"	--	2"					
BP443	4	1	16' - 5"	STR									
BP444	4	2	14' - 4"	STR									
BP445	4	2	11' - 2"	STR									
BP446	4	2	16' - 8"	STR									* FIELD BEND AS REQUIRED
BP447	4	6	8' - 3"	17A		3'-1"	2'-1"	3'-1"					R=5 1/2" (INSIDE RADIUS)
BP448	4	3	11' - 4"	17B	3'-9"	4'-2"	3'-9"	5'-6"					R=5 1/2" (INSIDE RADIUS), LEG "A" VERTICAL
BP449	4	6	9' - 6"	17A		3'-8"	2'-2"	3'-8"					R=9 1/2" (INSIDE RADIUS)

MARK	SIZE	NO.	LENGTH	TYPE	A	B	C	D	E	F	G	INCR.	REMARKS
ISLAND - BARRIER WALL													
D501	5	37	5' - 2"	17H	1'-0"	10"	3'-3"	6 1/2'					
D502	5	33	3' - 10"	17		4'-0"	1'-0"	--					
D503	5	37	6' - 6"	17G	2'-10"	9 1/2"	1'-3"						
D504	5	8	4' - 5"	17		3'-5"	1'-0"	--					
D505	5	4	5' - 7"	17		2'-1"	1'-5"	2'-1"					
D506	5	1	4' - 7"	17H	1'-0"	10"	2'-9"	--					
D507	5	1	4' - 8"	17H	1'-0"	10"	2'-10"	1"					
D508	5	1	4' - 9"	17H	1'-0"	10"	2'-11"	2"					
D509	5	1	4' - 11"	17H	1'-0"	10"	3'-1"	3"					
D510	5	1	5' - 1"	17H	1'-0"	10"	3'-2"	4"					
D511	5	1	5' - 2"	17H	1'-0"	10"	3'-3"	5"					
D512	5	1	5' - 3"	17H	1'-0"	10"	3'-4"	6"					
D513	5	1	4' - 7"	17		3'-7"	1'-0"	--					
D514	5	1	4' - 8"	17		3'-8"	1'-0"	--					
D515	5	1	4' - 9"	17		3'-9"	1'-0"	--					
D516	5	1	4' - 11"	17		3-11"	1'-0"	--					
D517	5	1	5' - 0"	17		4'-0"	1'-0"	--					
D518	5	1	5' - 1"	17		4'-1"	1'-0"	--					
D519	5	1	5' - 2"	17		4'-2"	1'-0"	--					
D520	5	1	5' - 6"	17G	2'-1"	1'-4"	1'-4"						
D521	5	1	5' - 7"	17G	2'-2"	1'-3"	1'-4"						
D522	5	1	5' - 9"	17G	2'-4"	1'-1"	1'-4"						
D523	5	1	5' - 10"	17G	2'-5"	1'-0"	1'-4"						
D524	5	1	5' - 11"	17G	2'-6"	11"	1'-4"						
D525	5	1	6' - 3"	17G	2'-8"	10"	1'-4"						
D526	5	1	6' - 4"	17G	2'-9"	9 1/2"	1'-4"						
D527	5	16	25' - 6"	STR									
			-										

MARK	SIZE	NO.	LENGTH	TYPE	A	B	C	D	E	F	G	INCR.	REMARKS
ISLAND - GANTRY PEDESTAL AND FOOTING													
F501	5	26	11' - 0"	17		3'-8"	3'-8"	3'-8'					
F502	5	5	8' - 8"	17		2'-7"	3'-6"	2'-7'					
F503	5	5	7' - 11"	17		2'-7"	5'-4"	--					
F504	5	26	8' - 6"	17		3'-8"	1'-2"	3'-8'					
F505	5	26	6' - 6"	17		2'-8"	1'-2"	2'-8'					
F701	7	48	7' - 8"	STR									
F801	8	36	10' - 7"	17		9'-3'	1'-4"	--					

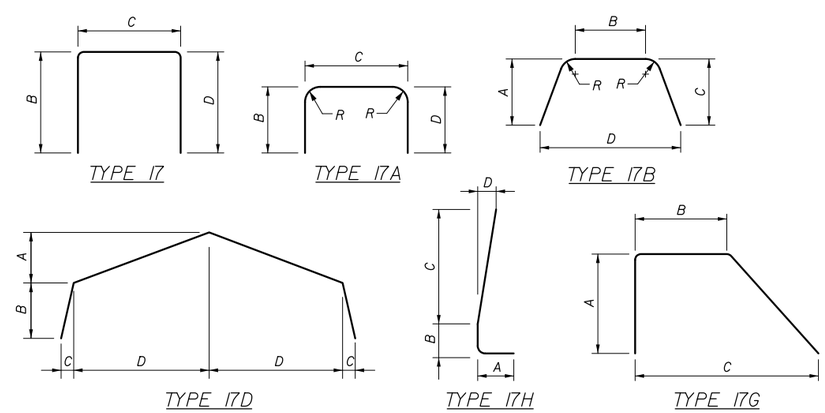

Date:8/17/2015

Filename: 062_Exit53_Island B Rebar Schedule.dgn

Scale: AS NOTED

No.	Revision	By	Date

Designed by: HNTB

CONSULTANT PROJECT MANAGER: R. Bruce Munger, P.E.

	By	Date		By	Date
Designed	AGP	08/15	Checked	FAC	08/15
Drawn	KZT	08/15	In Charge of	RAL	08/15

HNTB CORPORATION
340 County Road, Suite 6-C
Westbrook, ME 04092
TEL (207) 774-5155
FAX (207) 228-0909

MAINE TURNPIKE

THE GOLD STAR MEMORIAL HIGHWAY

MTA PROJECT MANAGER: William Yates

INTERCHANGE 53
TOLL PLAZA REPLACEMENT
ISLAND TYPE B
REINFORCEMENT SCHEDULE

SHEET NUMBER: STR-16

CONTRACT:2015.09

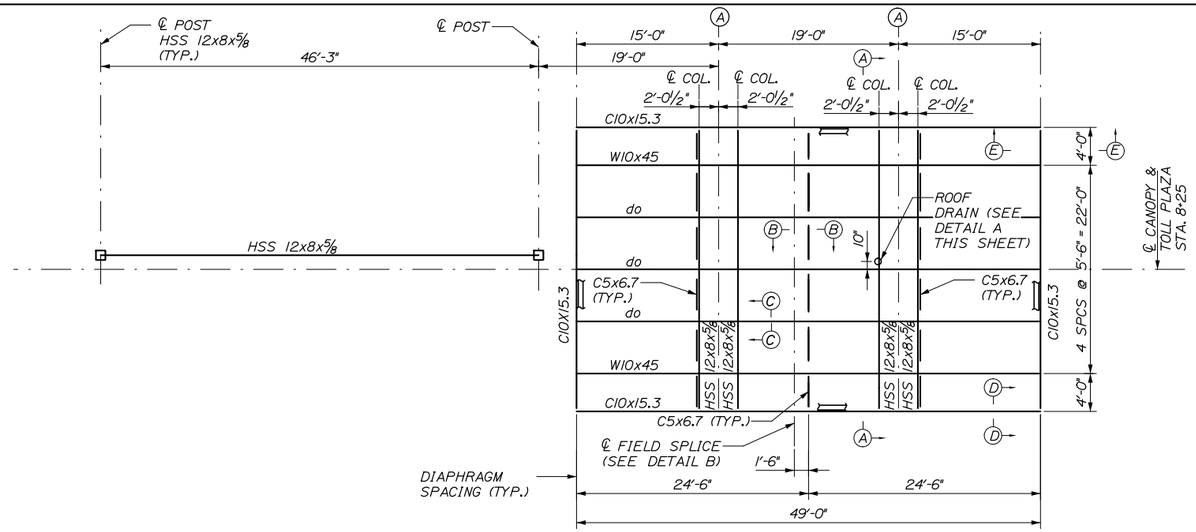

PLAN - TOLL PLAZA

SCALE: 1/8" = 1'-0"

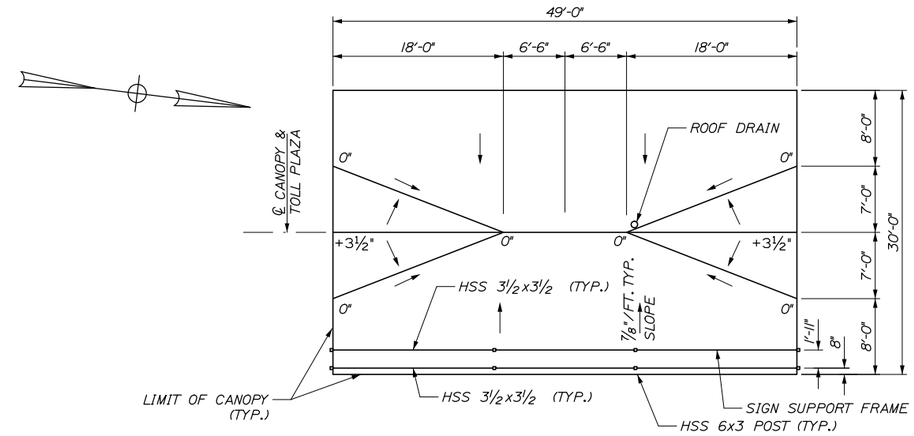

CANOPY CRICKET DETAIL

SCALE: 1/8" = 1'-0"

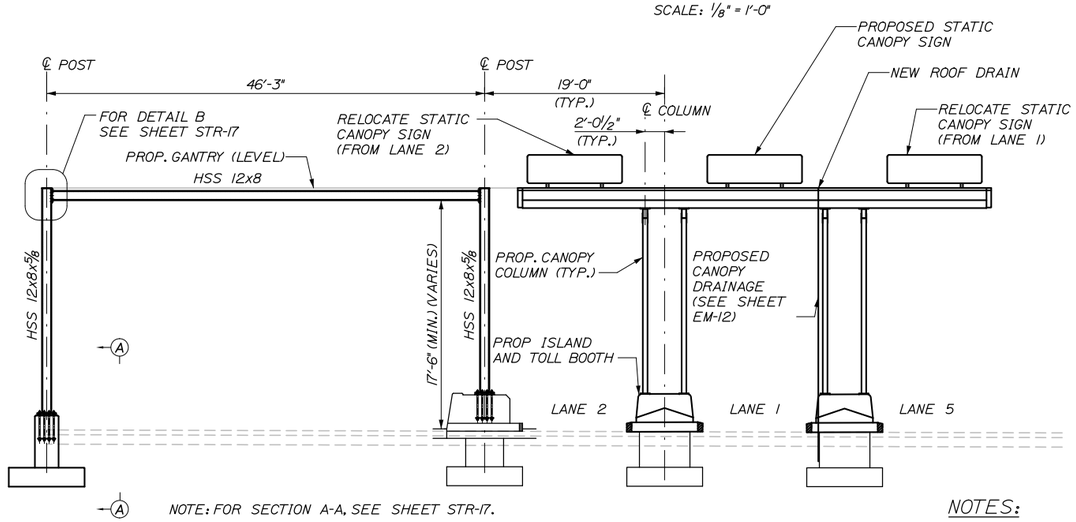

ELEVATION - TOLL PLAZA

SCALE: 1/8" = 1'-0"

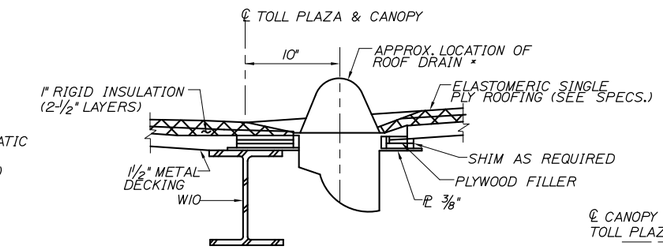

SECTION F-F

NTS

* NOTE: FOR ADDITIONAL DETAILS FOR THE INSTALLATION OF ROOF DRAIN, SEE MECHANICAL DRAWINGS.

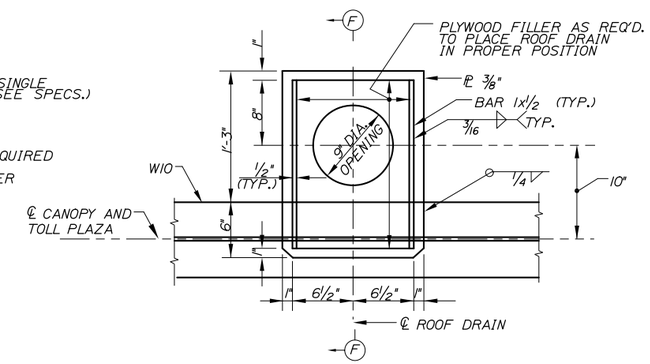

DETAIL A

NTS

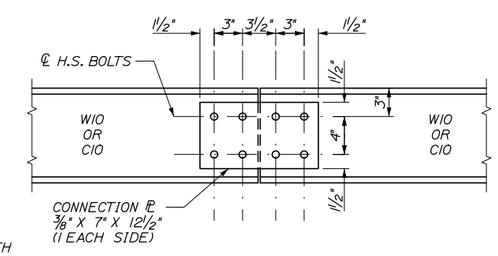

FIELD SPLICE DETAIL

SCALE 1 1/2" = 1'

NOTES:

1. FOR SECTIONS A-A, B-B, C-C, D-D AND E-E SEE SHEET STR-18.
2. STRUCTURAL STEEL FOR CANOPY FRAMING SHALL CONFORM TO THE FOLLOWING:
   ANGLES, PLATES AND CHANNELS -ASTM A572 GRADE 50.
   WIDE FLANGE SECTIONS -ASTM A992.
   HOLLOW STRUCTURAL SECTIONS (HSS)-ASTM A500 GRADE B.
3. CONNECTION BETWEEN STEEL ELEMENTS SHALL BE MADE WITH EITHER ASTM A325 HIGH STRENGTH BOLTS OR WELD MATERIAL CONFORMING TO E70XX. MINIMUM BOLT SIZE SHALL BE 3/4" DIA. IN STANDARD HOLES UNLESS NOTED OTHERWISE. MINIMUM WELD SIZE SHALL BE 1/4" INCH UNLESS NOTED OTHERWISE.
4. ANCHOR RODS SHALL CONFORM TO ASTM F1554 GRADE 55, AND SHALL BE HOT DIPPED GALVANIZED IN ACCORDANCE WITH ASTM A153.
5. METAL ROOF DECK SHALL CONFORM TO ASTM A653, STRUCTURAL GRADE 33, AND SHALL HAVE ZINC COATED FINISH OF G-90 OR BETTER. DECK MATERIAL SHALL BE 18 GAGE MINIMUM WITH THE FOLLOWING MINIMUM CROSS SECTIONAL PROPERTIES:
   IP = 0.289 in4/ft SP = 0.318 in4/ft
   IN = 0.295 in4/ft SN = 0.327 in4/ft

Scale: AS NOTED

No.	Revision	By	Date

Designed by: HNTB

CONSULTANT PROJECT MANAGER: R. Bruce Munger, P.E.

	By	Date		By	Date
Designed	AGP	08/15	Checked	FAC	08/15
Drawn	KZT	08/15	In Charge of	RAL	08/15

HNTB CORPORATION
340 County Road, Suite 6-C
Westbrook, ME 04092
TEL (207) 774-5155
FAX (207) 228-0909

MAINE TURNPIKE

THE GOLD STAR MEMORIAL HIGHWAY

MTA PROJECT MANAGER: William Yates

INTERCHANGE 53
TOLL PLAZA REPLACEMENT

CANOPY FRAMING & DETAILS

SHEET NUMBER: STR-17

CONTRACT:2015.09

Date:8/18/2015

Filename: 063_Exit53_Prop Canopy Framing & Dets.dgn

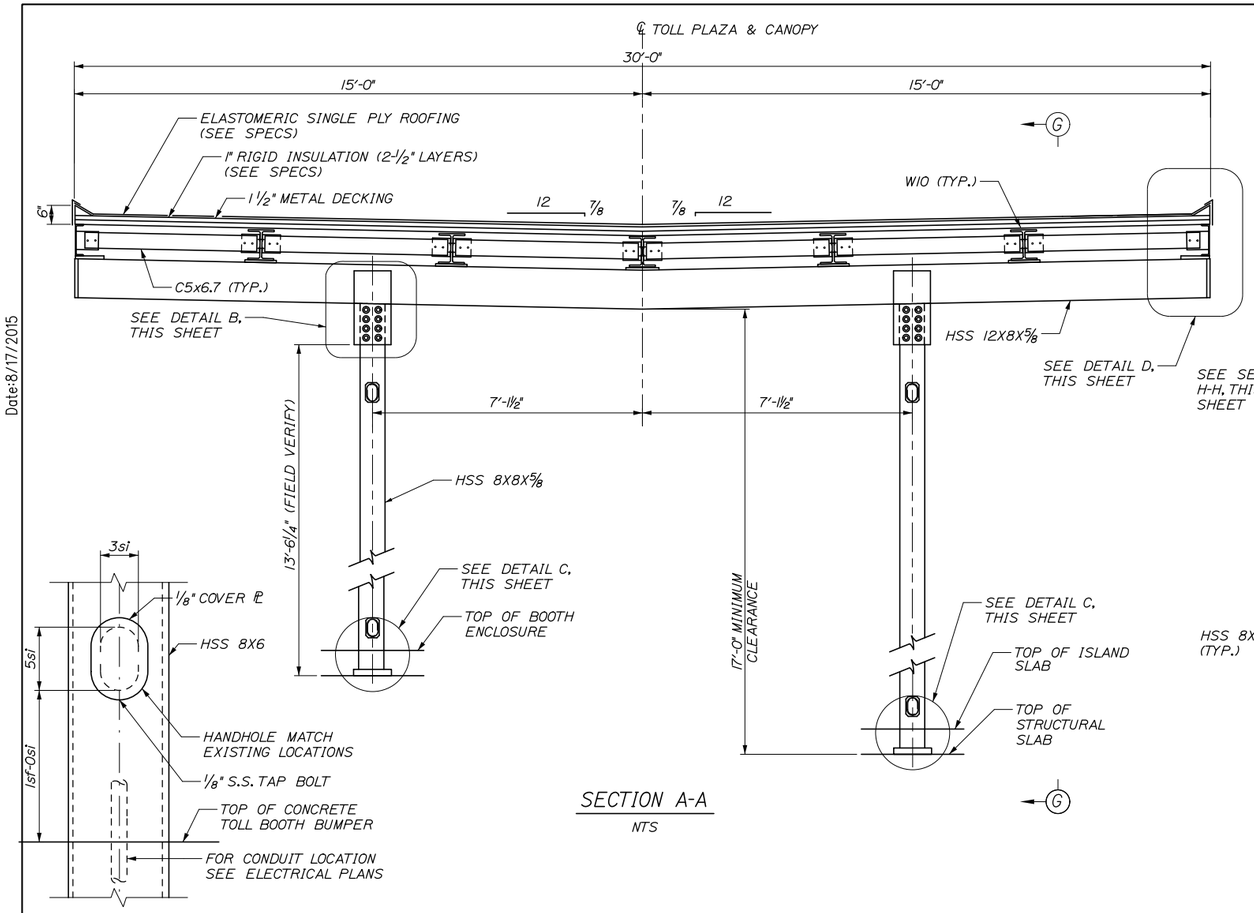

SECTION A-A
NTS

DETAIL D

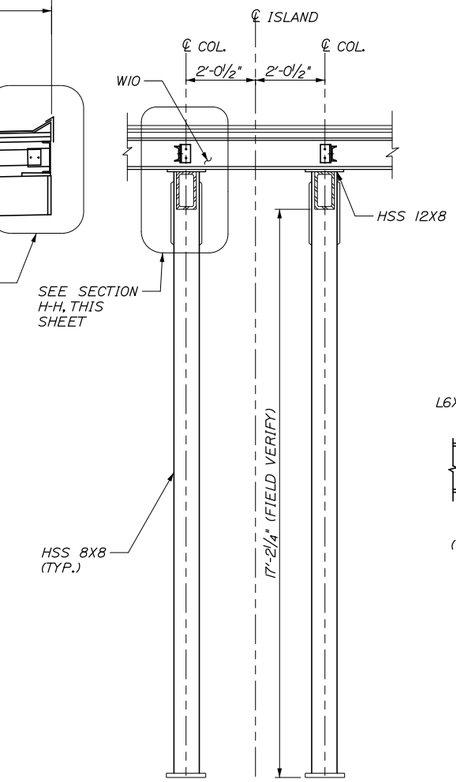

SECTION G-G
TAKEN @ ISLAND A (ISLAND B SIMILAR OPPOSITE HAND)
NTS

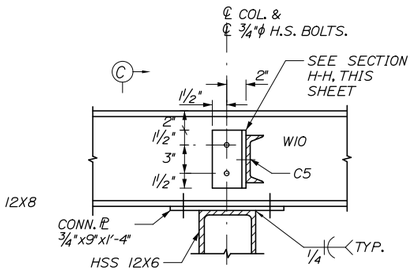

SECTION B-B
NTS

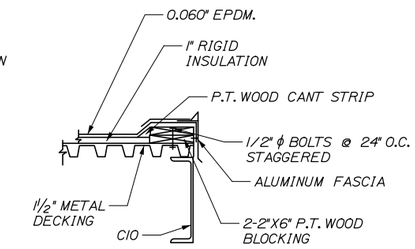

SECTION E-E
NTS

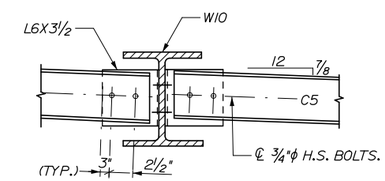

SECTION C-C
NTS

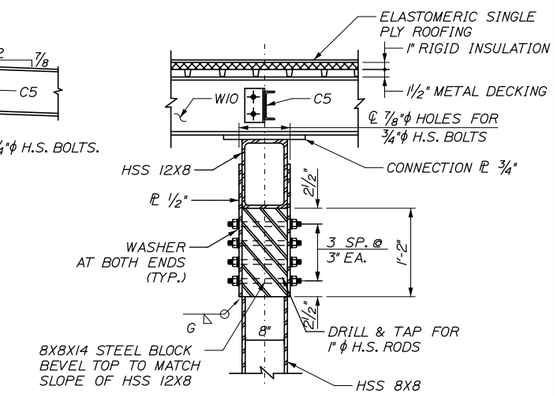

SECTION H-H
NTS

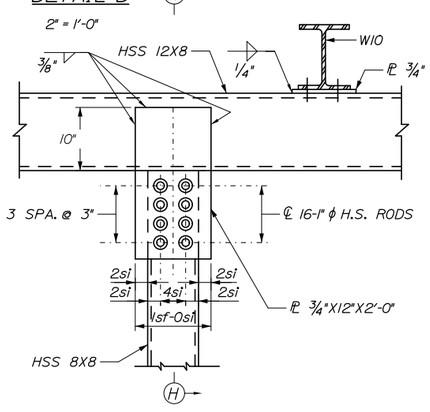

DETAIL B
1"=1'-0"

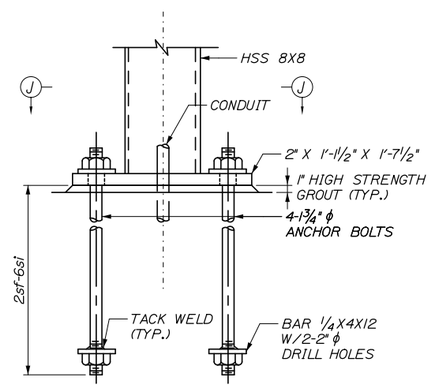

DETAIL C
1 1/2"=1'-0"

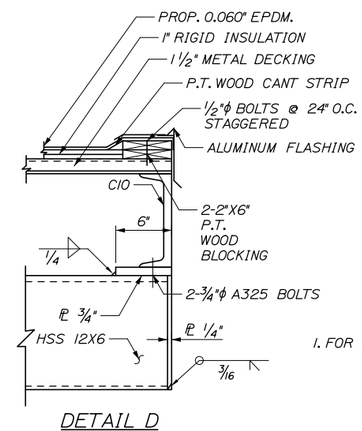

DETAIL D
NTS

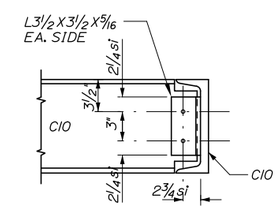

SECTION D-D
NTS

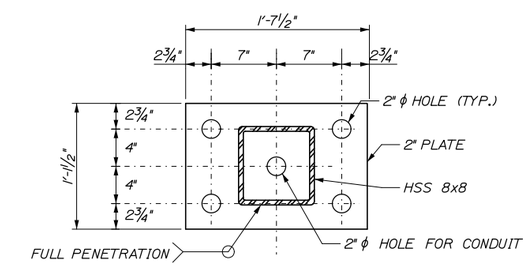

SECTION J-J
NTS

NOTES:
1. FOR STRUCTURAL NOTES SEE SHEET STR-01.

Date:8/17/2015

Filename: 064_Exit53_Prop Canopy Sections & Dets.dgn

Scale: AS NOTED				Designed by: HNTB						HNTB CORPORATION 340 County Road, Suite 6-C Westbrook, ME 04092 TEL (207) 774-5155 FAX (207) 228-0909	MAINE TURNPIKE	THE GOLD STAR MEMORIAL HIGHWAY	INTERCHANGE 53 TOLL PLAZA REPLACEMENT
No.	Revision	By	Date	CONSULTANT PROJECT MANAGER: R. Bruce Munger, P.E.									CANOPY SECTIONS & DETAILS
					By	Date		By	Date				SHEET NUMBER: STR-18
				Designed	AGP	08/15	Checked	FAC	08/15				
				Drawn	KZT	08/15	In Charge of	RAL	08/15		MTA PROJECT MANAGER: William Yates		CONTRACT:2015.09 64 OF 95

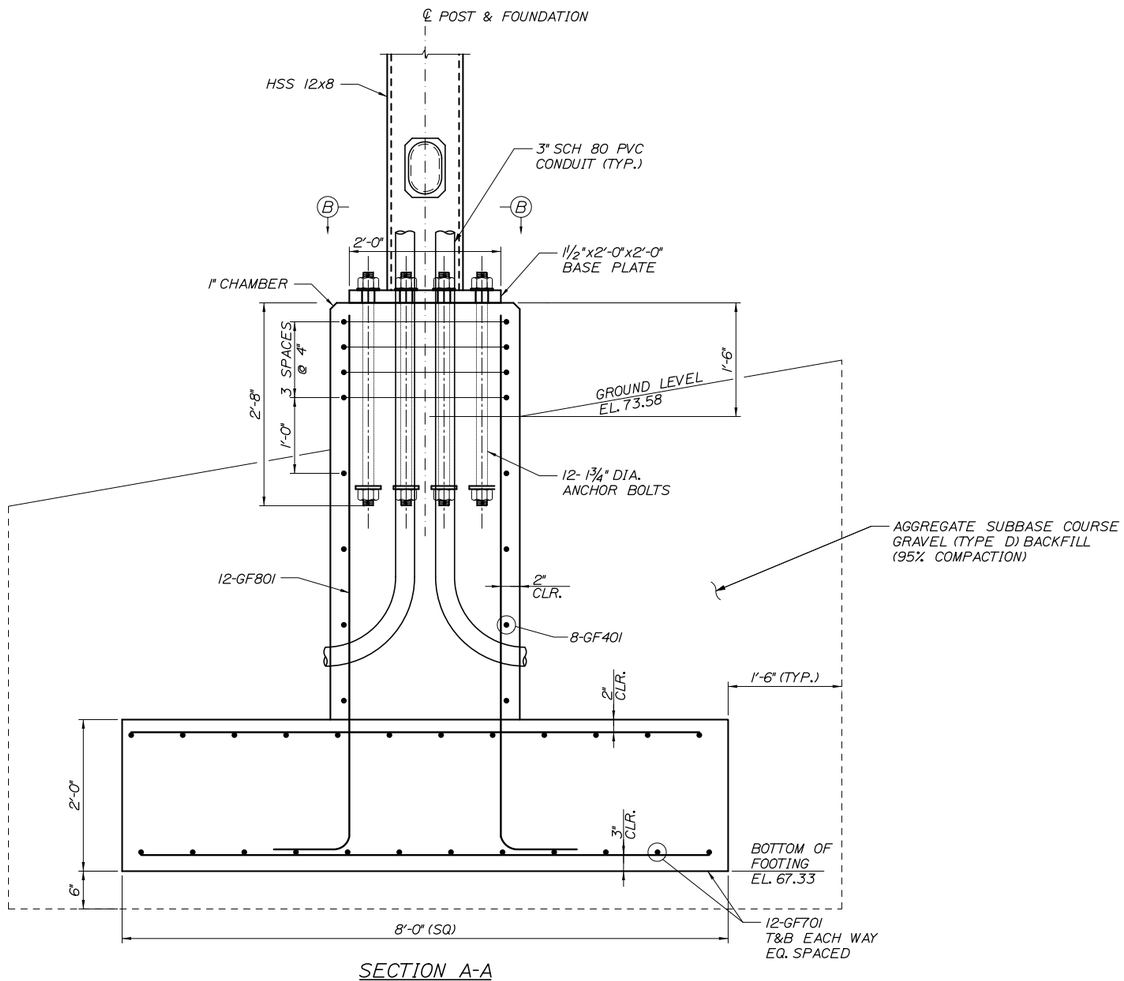

SECTION A-A
SCALE: 1" = 1'-0"

GANTRY COLUMN - FOUNDATION CONNECTION DETAILS

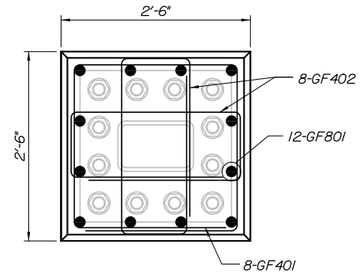

SECTION B-B
SCALE: 1" = 1'-0"

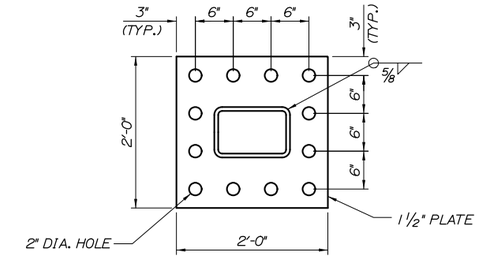

BASE PLATE DETAILS
SCALE: 1" = 1'-0"

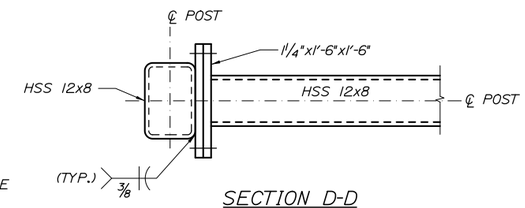

SECTION D-D
SCALE: 1" = 1'-0"

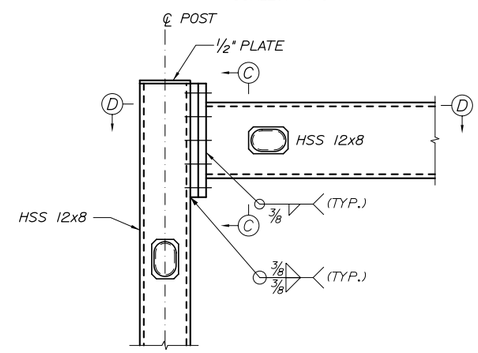

DETAIL B
SCALE: 1" = 1'-0"

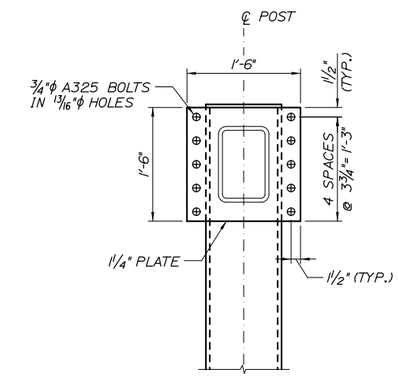

SECTION C-C
SCALE: 1" = 1'-0"

BEAM - COLUMN CONNECTION DETAILS

NOTE:
1. FOR SECTION A-A LOCATION, SEE SHEET STR-17.
2. FOR DETAIL B LOCATION SEE SHEET STR-17.
3. CONNECTION BOLTS SHALL BE A325 ¾" DIAMETER, STANDARD HOLES.

INTERCHANGE 53 - GANTRY FOOTING

MARK	SIZE	NO.	LENGTH	TYPE	A	B	C	D	E	F	G	INCR.	REMARKS
GANTRY FOOTING AND PEDESTAL													
GF401	4	8	10' - 4"	T1	1'-8"	2'-2"	2'-2"	2'-2"	2'-2"				
GF402	4	16	7' - 10"	T1	1'-8"	11"	2'-2"	11"	2'-2"				
GF701	7	48	7' - 8"	STR									
GF801	8	12	8' - 6"	17		7'-0"	1'-6"	--					

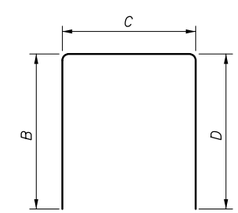

TYPE 17

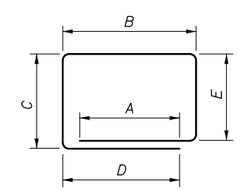

TYPE T1

Scale: AS NOTED

No.	Revision	By	Date

Designed by: HNTB

CONSULTANT PROJECT MANAGER: R. Bruce Munger, P.E.

	By	Date		By	Date
Designed	AGP	08/15	Checked	FAC	08/15
Drawn	KZT	08/15	In Charge of	RAL	08/15

HNTB CORPORATION
340 County Road, Suite 6-C
Westbrook, ME 04092
TEL (207) 774-5155
FAX (207) 228-0909

MAINE TURNPIKE

THE GOLD STAR MEMORIAL HIGHWAY

MTA PROJECT MANAGER: William Yates

INTERCHANGE 53
TOLL PLAZA REPLACEMENT

GANTRY SECTIONS & DETAILS

SHEET NUMBER: STR-19

CONTRACT: 2015.09

Date: 8/17/2015

Filename: 065_Exit53_Gantry Dets.dgn

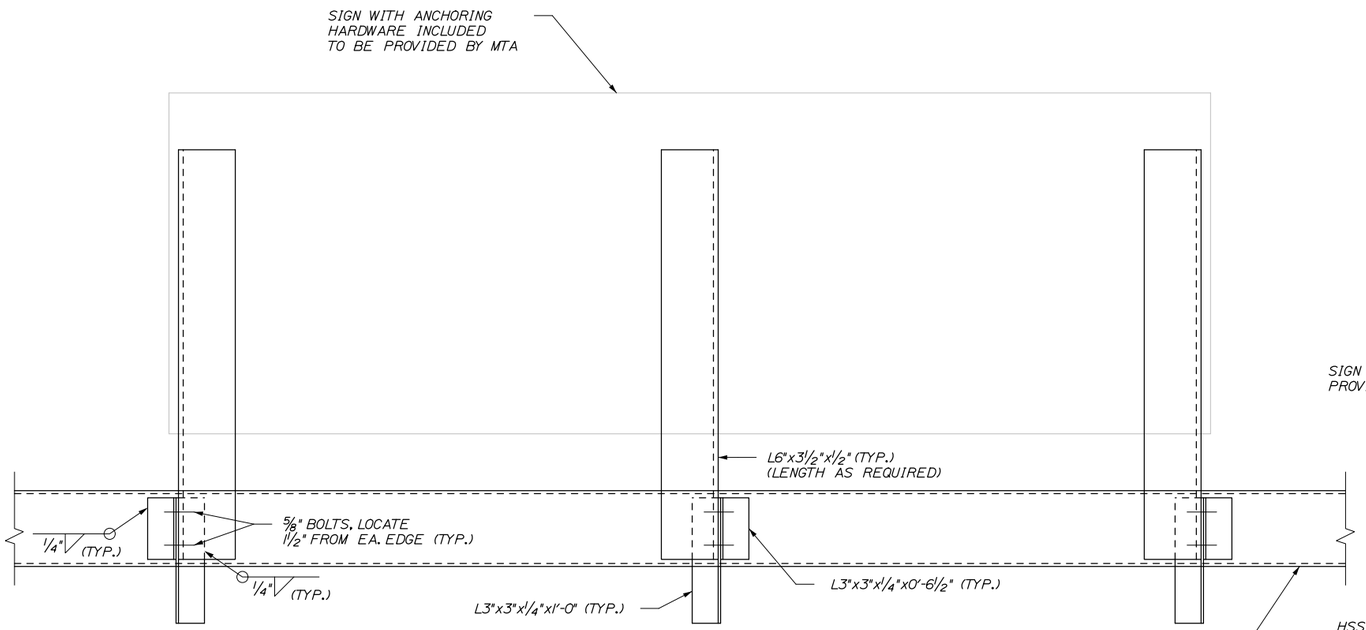

CANOPY FRAMING PLAN
1½" = 1'-0"

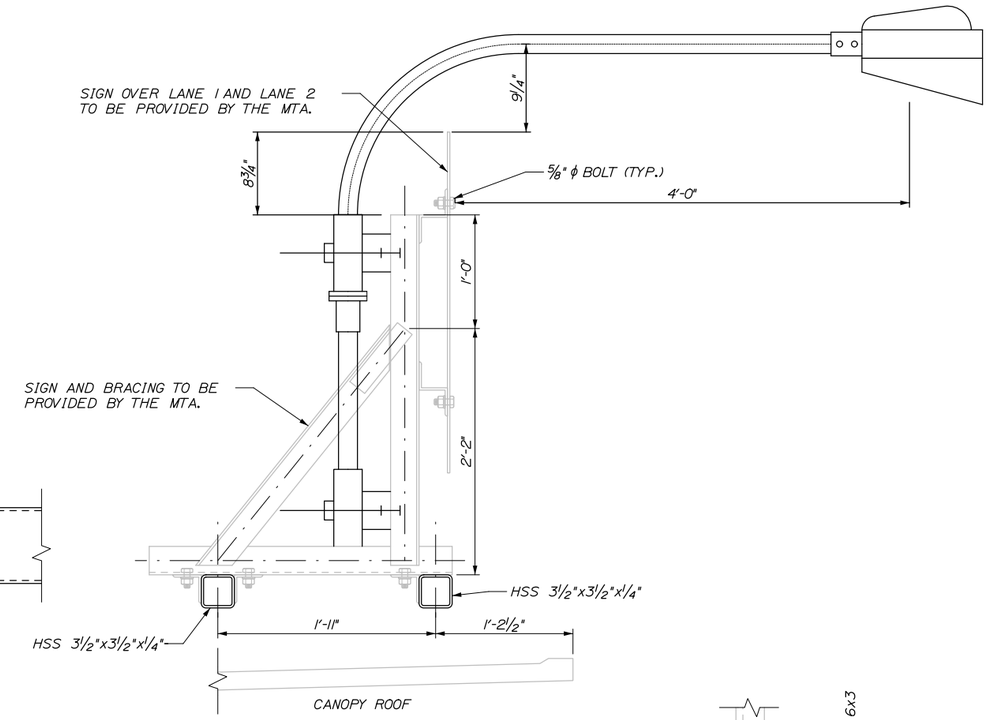

CANOPY MOUNTED SIGN
1½" = 1'-0"

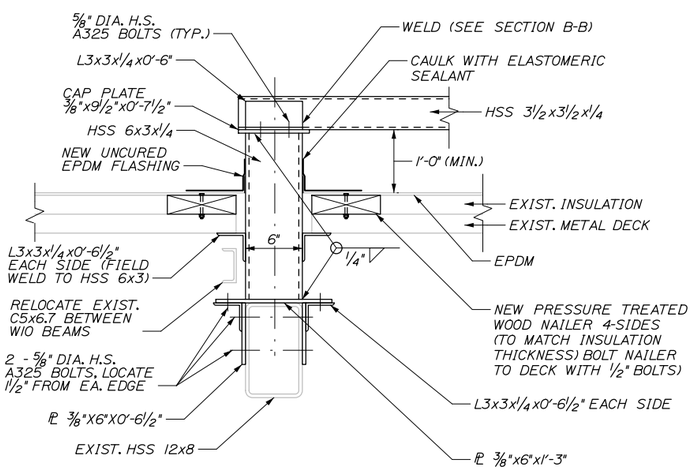

CANOPY MOUNTED INTERIOR SIGN POST
1½" = 1'-0"

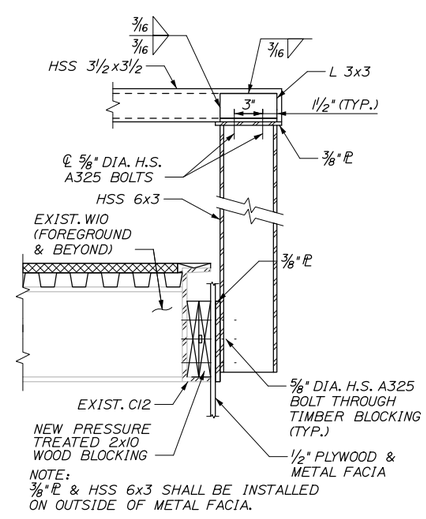

SECTION B-B
1½" = 1'-0"

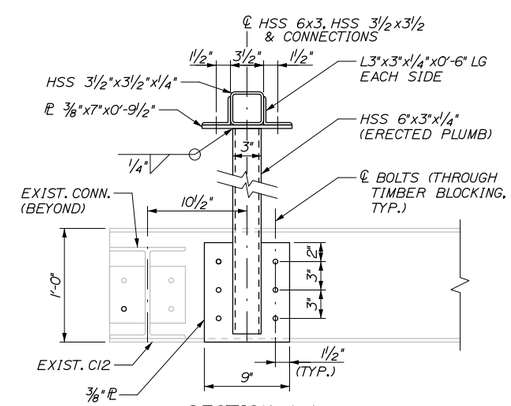

SECTION A-A
1½" = 1'-0"

CANOPY MOUNTED EXTERIOR SIGN COLUMN

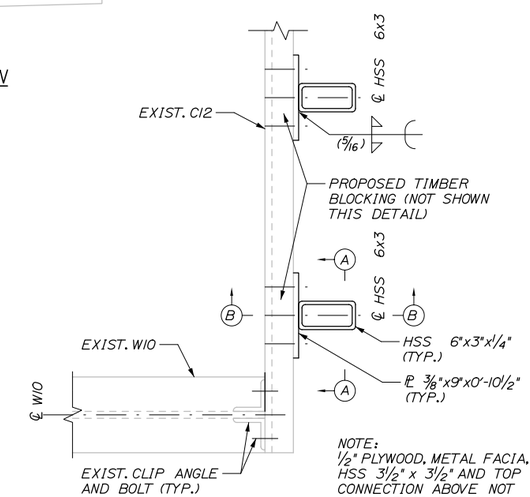

PLAN VIEW DETAIL A
1½" = 1'-0"

NOTES:

1. CONTRACTOR TO SUBMIT FLASHING DETAILS FOR REVIEW PRIOR TO CONSTRUCTION.

Date: 8/17/2015

Filename: 066_Exit53_CanopySignDetails.dgn

Scale: AS NOTED				Designed by: HNTB						HNTB CORPORATION 340 County Road, Suite 6-C Westbrook, ME 04092 TEL (207) 774-5155 FAX (207) 228-0909	MAINE TURNPIKE	THE GOLD STAR MEMORIAL HIGHWAY	INTERCHANGE 53 TOLL PLAZA REPLACEMENT CANOPY SIGNS TYPICAL SECTIONS
No.	Revision	By	Date	CONSULTANT PROJECT MANAGER: R. Bruce Munger, P.E.								MTA PROJECT MANAGER: William Yates	SHEET NUMBER: STR-20
					By	Date		By	Date				CONTRACT: 2015.09
				Designed	AGP	08/15	Checked	FAC	08/15				66 OF 95
				Drawn	KZT	08/15	In Charge of	RAL	08/15				

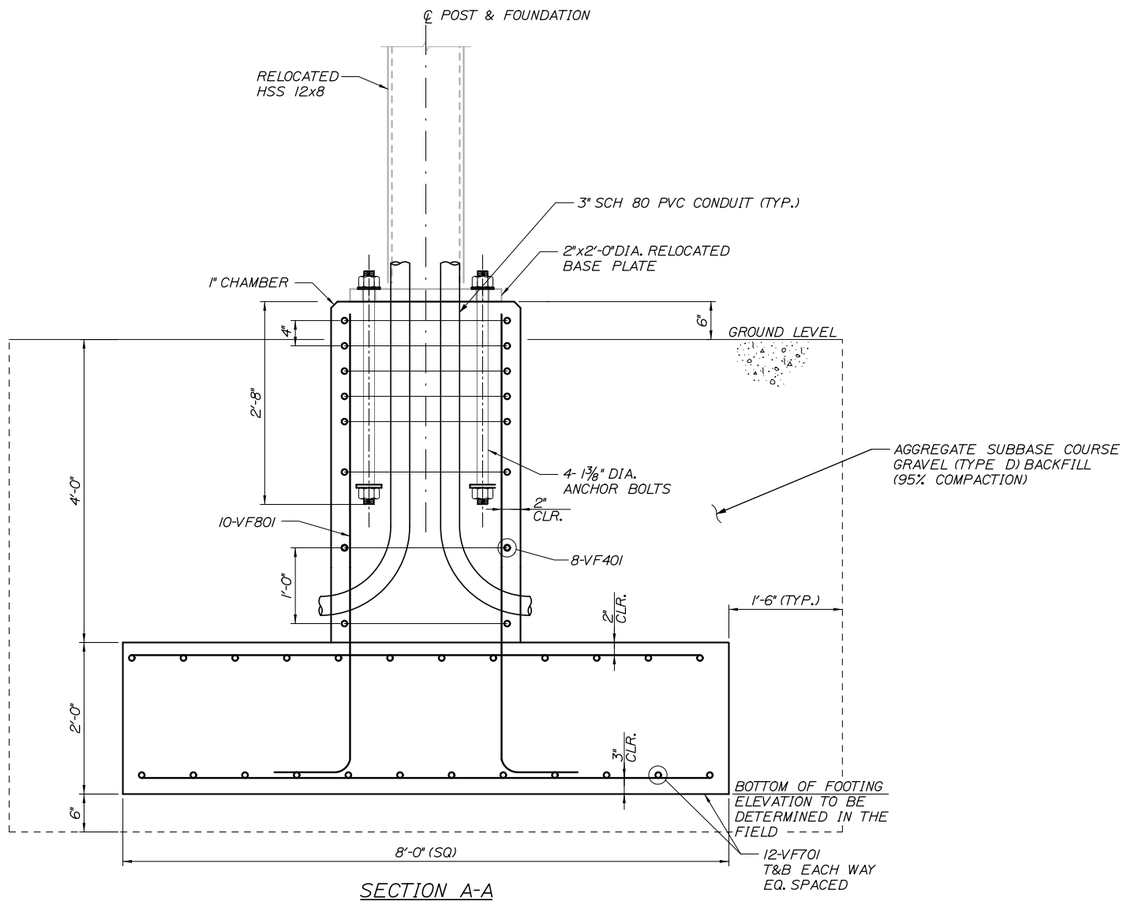

SECTION A-A

SCALE: 1" = 1'-0"

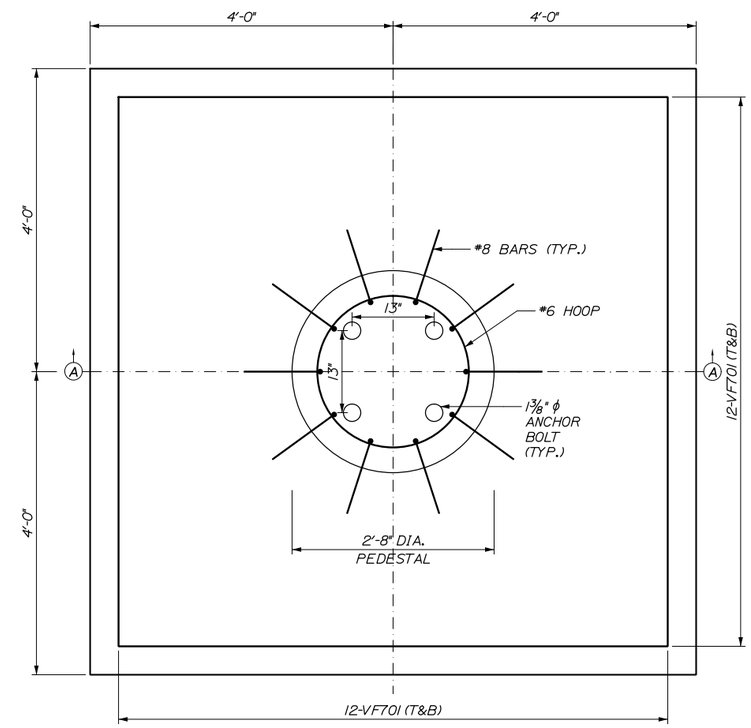

PLAN

SCALE: 1" = 1'-0"

VMS SIGN STRUCTURE - FOUNDATION CONNECTION DETAILS

INTERCHANGE 53 - GANTRY FOOTING

MARK	SIZE	NO.	LENGTH	TYPE	A	B	C	D	E	F	G	INCR.	REMARKS
GANTRY FOOTING AND PEDESTAL													
VF401	4	8	8' - 10"	120	2'-4"	8"	2'-2"	2'-2"	2'-2"				
VF701	7	48	7' - 8"	STR									
VF801	8	10	7' - 6"	17		6'-0"	1'-6"	--					

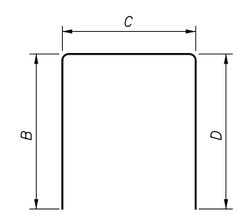

TYPE 17

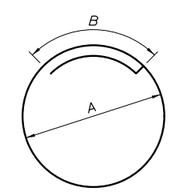

TYPE 120

NOTES:

1. REMOVAL, DISASSEMBLY, AND RELOCATION OF VMS AND SUPPORTING STRUCTURE TO PAID FOR UNDER ITEM 645.123
2. FOR LOCATION OF VMS SIGN STRUCTURE, SEE SHEET GP-02
3. CONTRACTOR SHALL FIELD VERIFY THE ANCHOR BOLT LOCATIONS WITHIN THE NEW VMS FOUNDATION TO CONFIRM THAT THEY PROPERLY ALIGN WITH THE BASE PLATE HOLES BEFORE CASTING THE ANCHOR BOLTS IN THE VMS FOUNDATION
4. PRIOR TO MOVING SIGN STRUCTURE ALL WIRING SHALL BE PULLED BACK FROM THE CABINET AND SECURED.

Date:8/17/2015

Filename: 067_VMS_Foundation.dgn

Scale: AS NOTED

No.	Revision	By	Date

Designed by: HNTB

CONSULTANT PROJECT MANAGER: R. Bruce Munger, P.E.

	By	Date		By	Date
Designed	AJF	08/15	Checked	BRG	08/15
Drawn	SLR	08/15	In Charge of	RAL	08/15

HNTB CORPORATION
340 County Road, Suite 6-C
Westbrook, ME 04092
TEL (207) 774-5155
FAX (207) 228-0909

MAINE TURNPIKE

THE GOLD STAR MEMORIAL HIGHWAY

MTA PROJECT MANAGER: William Yates

INTERCHANGE 53
TOLL PLAZA REPLACEMENT

VMS FOUNDATION

SHEET NUMBER: STR-21

CONTRACT:2015.09

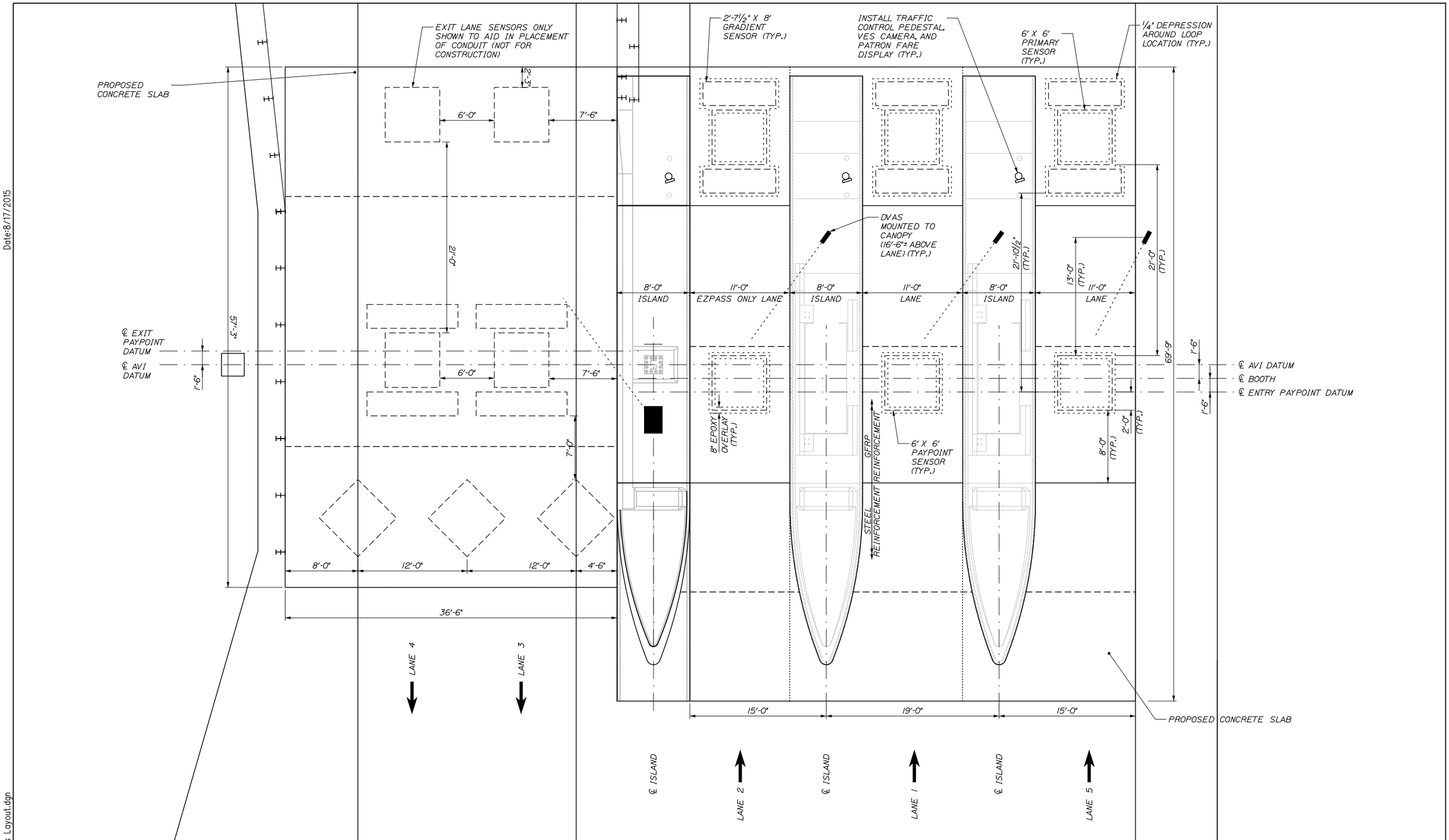

Date:8/17/2015

Filename: 068_Exit53-Sensors Layout.dgn

Scale: 5 0 5 10

No.	Revision	By	Date

Designed by:

HNTB

CONSULTANT PROJECT MANAGER: R. Bruce Munger, P.E.

	By	Date		By	Date
Designed	WA	08/15	Checked	WA	08/15
Drawn	CNP	08/15	In Charge of	RAL	08/15

HNTB CORPORATION
340 County Road, Suite 6-C
Westbrook, ME 04092
TEL (207) 774-5155
FAX (207) 228-0909

MAINE TURNPIKE

THE GOLD STAR MEMORIAL HIGHWAY

MTA PROJECT MANAGER: William Yates

INTERCHANGE 53
TOLL PLAZA REPLACEMENT

SENSOR LAYOUT

SHEET NUMBER: EM-01

CONTRACT:2015.09

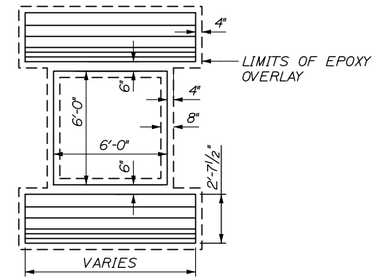

LOOP DETAIL AND EPOXY OVERLAY

N.T.S.

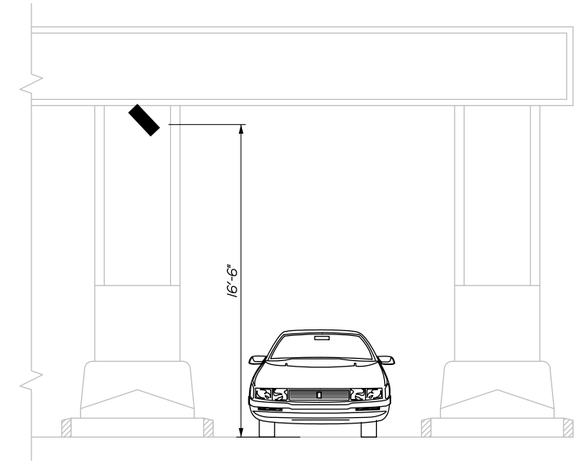

SECTION VIEW

N.T.S.

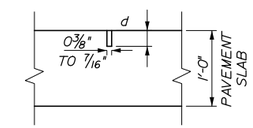

d = 1¼" TO 1½" FOR SINGLE LEAD CUT
2½" FOR MULTIPLE LEAD CUT

LEAD-IN CUT

N.T.S.

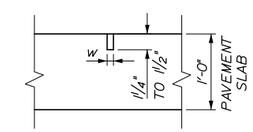

W = ½" FOR GRADIENT ENDS
⅜" FOR ALL OTHER CUTS

SENSOR CUT

N.T.S.

NOTES:

1. TRANSCORE SHALL INJECT LOCTITE EPOXY INTO SAW CUT BEFORE INSTALLING SENSORS AND LEADS. TRANSCORE SHALL PROVIDE EQUIPMENT, TEMPLATES AND EPOXY. SEE SPECIAL PROVISIONS SECTION 655 FOR MORE INFORMATION.

2. ALL LAYOUT FOR PRIMARY AND GRADIENT SENSORS SHALL BE PROVIDED BY AND VERIFIED BY TRANSCORE PRIOR TO CUTTING CONCRETE.

3. ¼" DEPRESSION FOR EPOXY OVERLAY SHALL BE COMPLETED PRIOR TO SAW CUTTING CONCRETE FOR LOOPS.

4. MEASUREMENT FOR ITEM 515.23 EPOXY OVERLAY SHALL BE 10 SY PER LANE.

5. LOOP LAYOUT IS TYPICAL FOR ALL ENTRY LANES.

6. THE CONTRACTOR SHALL EXTEND THE GALVANIZED RIGID METAL CONDUIT 9'-9" BEYOND THE LIMITS OF THE CANOPY FOR THE INSTALLATION OF THE DVAS IN LANE 5.

Date:8/17/2015

Filename: 069_Exit53_SensorDetails.dgn

Scale: 5 0 5 10

No.	Revision	By	Date

Designed by:

HNTB

CONSULTANT PROJECT MANAGER: R. Bruce Munger, P.E.

	By	Date		By	Date
Designed	WA	08/15	Checked	WA	08/15
Drawn	CNP	08/15	In Charge of	RAL	08/15

HNTB CORPORATION
340 County Road, Suite 6-C
Westbrook, ME 04092
TEL (207) 774-5155
FAX (207) 228-0909

MAINE TURNPIKE

THE GOLD STAR MEMORIAL HIGHWAY

MTA PROJECT MANAGER: William Yates

INTERCHANGE 53
TOLL PLAZA REPLACEMENT

SENSOR DETAILS

SHEET NUMBER: EM-02

CONTRACT:2015.09

Date:8/17/2015

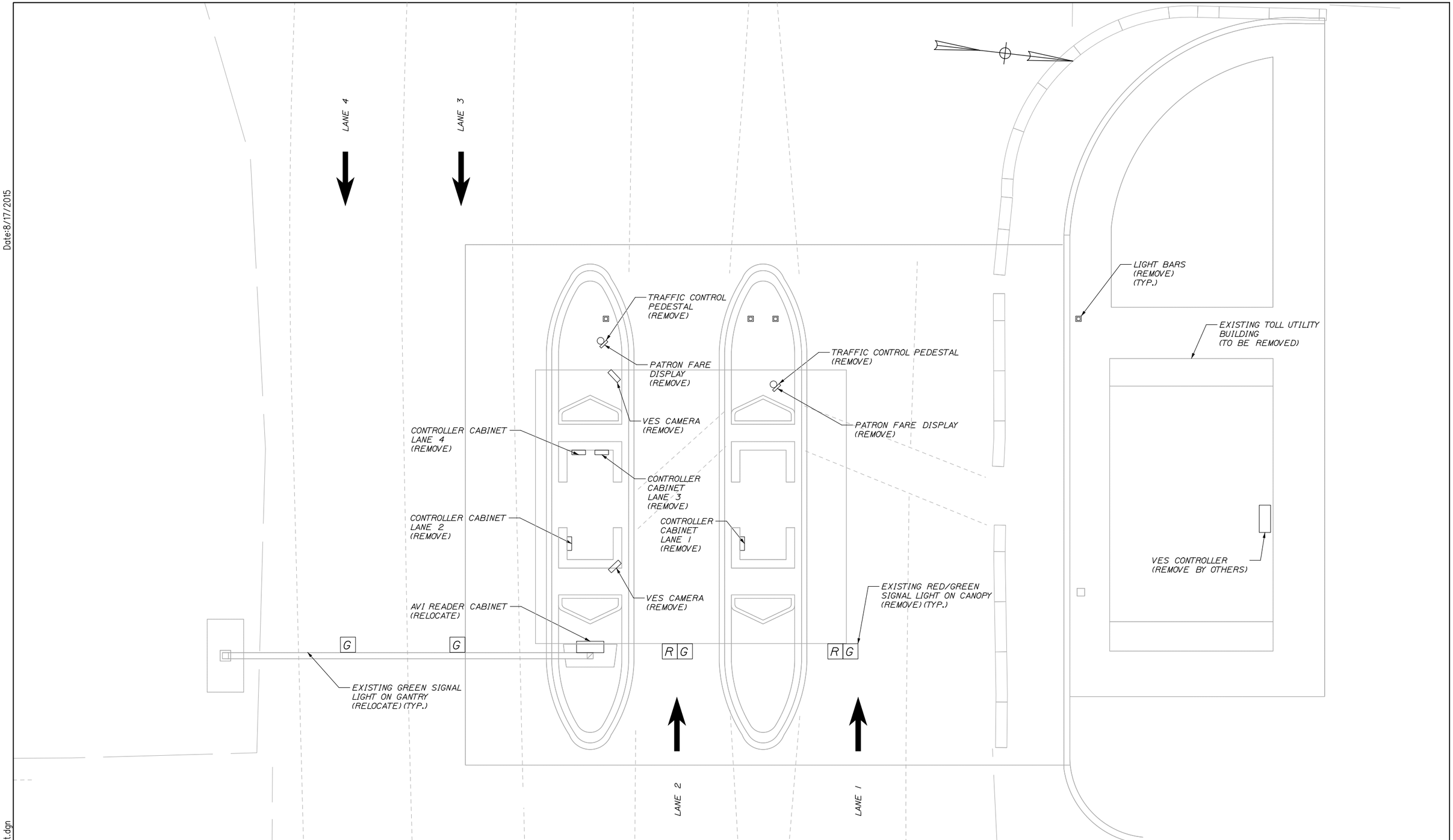

Scale: 5 0 5 10

No.	Revision	By	Date

Designed by:

HNTB

CONSULTANT PROJECT MANAGER: R. Bruce Munger, P.E.

	By	Date		By	Date
Designed	WA	08/15	Checked	WA	08/15
Drawn	CNP	08/15	In Charge of	RAL	08/15

HNTB CORPORATION
340 County Road, Suite 6-C
Westbrook, ME 04092
TEL (207) 774-5155
FAX (207) 228-0909

MAINE TURNPIKE

THE GOLD STAR MEMORIAL HIGHWAY

MTA PROJECT MANAGER: William Yates

INTERCHANGE 53 TOLL PLAZA REPLACEMENT

EXISTING ELECTRICAL PLAN

SHEET NUMBER: EM-03

CONTRACT:2015.09

Filename: 070_Exit53-ElecExist.dgn

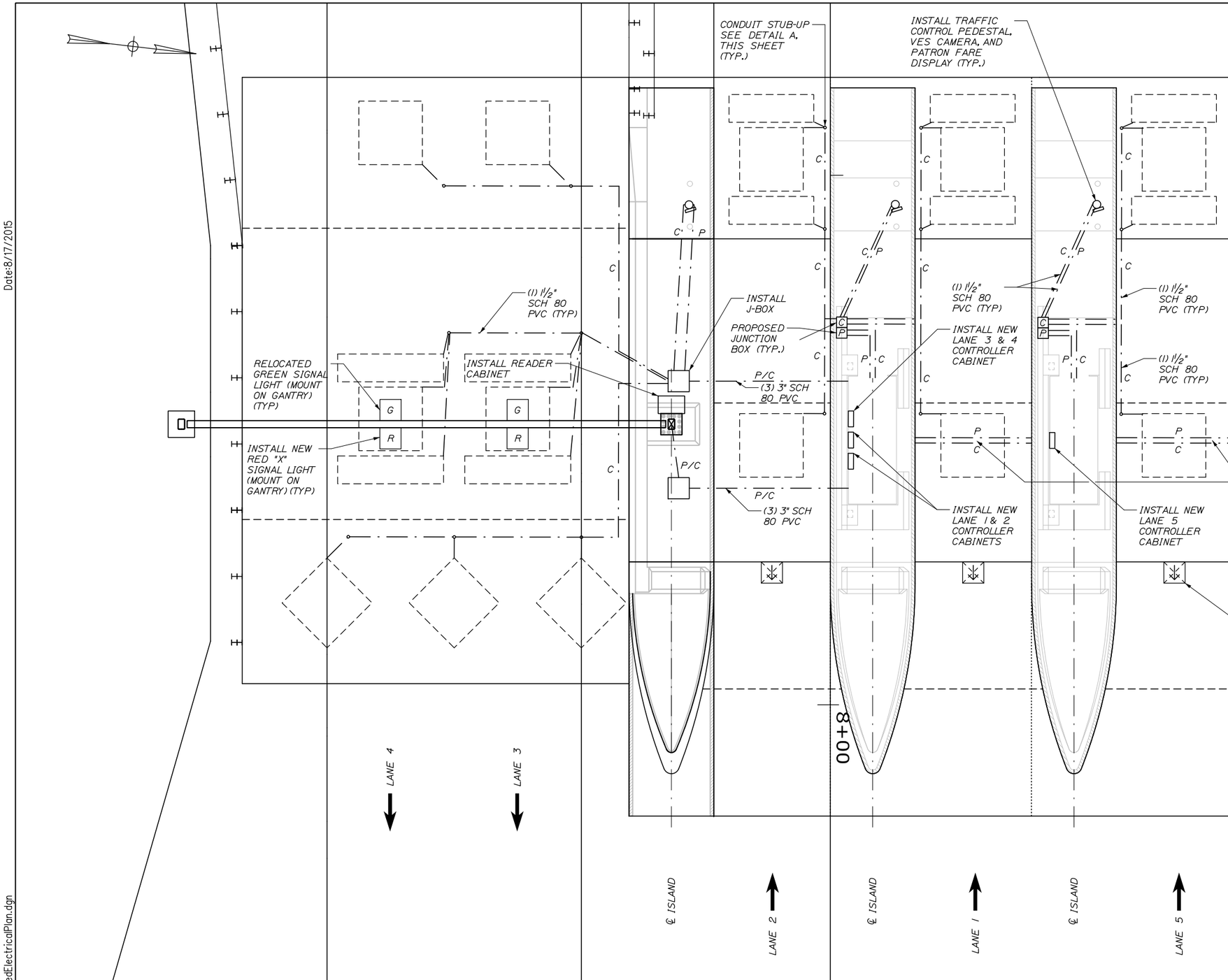

NOTES:

1. INSTALL NEW LANE CONTROLLERS AT LOCATIONS AS SHOWN ON THE PLANS.

2. ALL CONDUIT IN GRAVEL BELOW CONCRETE SHALL BE 1½" SCHEDULE 80 PVC.

3. ALL EXPOSED CONDUIT SHALL BE 1½" GALVANIZED RIGID MENTAL CONDUIT.

4. EXITING LANE SENSORS ARE TO BE INSATLLED BY OTHERS AT A LATER DATE.

5. THE CONTRACTOR SHALL SUBMIT A PLAN DETAILING HOW ALL CONDUITS SHALL LEAD TO THE NEW LANE CONTROLLER CABINET. EXISTING WIREWAYS AND CONDUITS SHALL BE USED WHERE POSSIBLE.

6. NEW CASH OUT WORK STATION TO BE INSTALLED IN THE TOLL BUILDING (BY OTHERS).

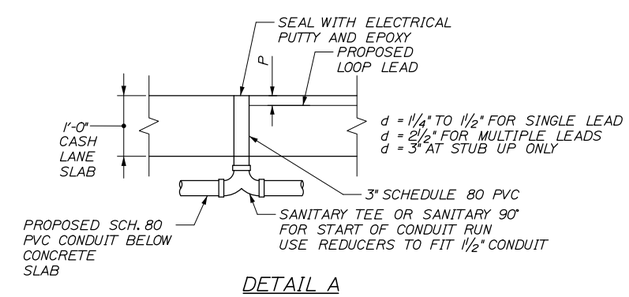

DETAIL A
STUB UP IN CASH LANE SLAB
SECTION VIEW

NOTE: SEALING STUB-UPS SHALL BE INCIDENTAL TO THE PVC PAY ITEM.

Scale: 5 0 5 10

No.	Revision	By	Date

Designed by: HNTB

CONSULTANT PROJECT MANAGER: R. Bruce Munger, P.E.

	By	Date		By	Date
Designed	WA	08/15	Checked	WA	08/15
Drawn	CNP	08/15	In Charge of	CDH	08/15

HNTB CORPORATION
340 County Road, Suite 6-C
Westbrook, ME 04092
TEL (207) 774-5155
FAX (207) 228-0909

MAINE TURNPIKE

THE GOLD STAR MEMORIAL HIGHWAY

MTA PROJECT MANAGER: William Yates

INTERCHANGE 53
TOLL PLAZA REPLACEMENT

PROPOSED ELECTRICAL PLAN

SHEET NUMBER: EM-04

CONTRACT:2015.09

Date:8/17/2015

Filename: 071_Exit53-ProposedElectricalPlan.dgn

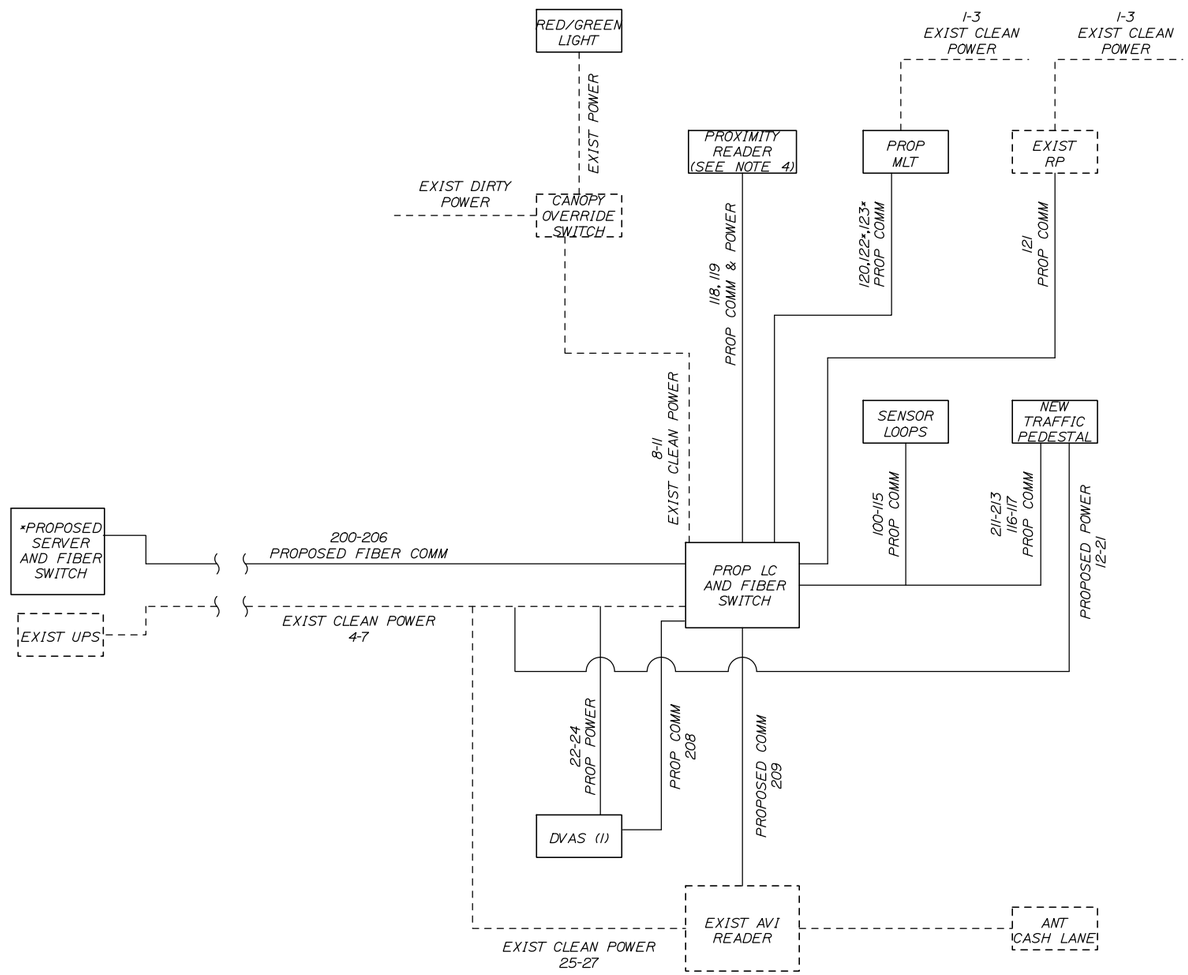

TOLLING EQUIPMENT SYSTEMS DIAGRAM - ENTRY LANE ONLY

*PROVIDED BY SYSTEM INTEGRATOR

NOTES:

1. NUMBERS CORRESPOND TO NUMBERS LISTED ON WIRING SCHEDULES.

2. DIAGRAM SHOWN FOR TYPICAL CASH LANE.

3. EXIT LANE CONTROLLER WILL HAVE CABLES TO ANTENNA, POWER, COMMUNICATIONS (FIBER OPTIC CABLE) AND DVAS.

4. PROXIMITY READER FOR FUTURE. INSTALL AND LEAVE SLACK UNDER COUNTER.

5. KEY SWITCHES SHALL BE USED IN BOTH DVAS AND VES CAMERAS CLEAN POWER LINES.

Date:8/17/2015

Filename: 072_WiringDiagram.dgn

No.	Revision	By	Date

Scale:

Designed by:

HNTB

CONSULTANT PROJECT MANAGER: R. Bruce Munger, P.E.

	By	Date		By	Date
Designed	RBM	08/15	Checked	RBM	08/15
Drawn	CDH	08/15	In Charge of	RAL	08/15

HNTB CORPORATION
340 County Road, Suite 6-C
Westbrook, ME 04092
TEL (207) 774-5155
FAX (207) 228-0909

MAINE TURNPIKE

THE GOLD STAR MEMORIAL HIGHWAY

MTA PROJECT MANAGER: William Yates

INTERCHANGE 53
TOLL PLAZA REPLACEMENT
POWER & COMMUNICATIONS
LINE DIAGRAM

SHEET NUMBER: EM-05

CONTRACT:2015.09

TOLL LANE POWER

WIRING SHOWN IS FOR TYPICAL CASH LANE. REPLICATE FOR SIMILAR LANES.

ATT/ETC LANE TYPE POWER WIRING SCHEDULE

	WIRE LABEL	DESCRIPTION	AWG	COLOR	CORE	JACKET	VOLTAGE	CIRCUIT BREAKER	FROM	TO	LANE SERVER TERMINAL #	TERMINATION REQUIREMENTS	TERMINATIONS	STATUS
	BOOTH QUAD OUTLET													
1	(LANE CONTROLLER) .L.B QUAD	PERIPHERAL POWER (HOT, NON-SWITCHED)	12	BLACK	STRANDED	THHW	120 VAC	20	EXISTING UPS	BOOTH QUAD OUTLET LOCATE WITHIN 3 FT OF ATTENDANT WORK AREA	N/A	INSTALL QUAD OUTLET	POWER PANEL	REUSE EXISTING
2	(LANE CONTROLLER) .N.B QUAD	PERIPHERAL POWER (NEUTRAL)		WHITE									POWER PANEL	REUSE EXISTING
3	(LANE CONTROLLER) .G.B QUAD	PERIPHERAL POWER (GROUND)		GREEN									POWER PANEL	REUSE EXISTING
	LANE SERVER													
4	(LANE CONTROLLER)..S.T1-1	LANE SERVER POWER (HOT, NON-SWITCHED)	12	BLACK	STRANDED	THHW	120 VAC	20	BOOTH or MAIN POWER DISTRIBUTION PANEL and ISOLATED GROUND BAR	LANE SERVER FIELD WIRING (T1) TERMINAL BLOCK	T1-1	BARE WIRE (Capped and Taped for termination by UTS)	POWER PANEL	REUSE EXISTING
5	(LANE CONTOLLER) .N.LS.T1-2	LANE SERVER POWER (NEUTRAL)		WHITE							T1-2		POWER PANEL	REUSE EXISTING
6	(LANE CONTROLLER) .LS.T1-3	LANE SERVER POWER (GROUND)		GREEN							T1-4		POWER PANEL	REUSE EXISTING
7	(LANE CONTROLLER)IG.LS.T1-4	LANE SERVER POWER (ISOLATED GROUND)		GREEN W/ WHITE STRIPE							T1-3		POWER PANEL	REUSE EXISTING
	CANOPY TRAFFIC SIGNAL													
8	COS.CTS-R.SIG	RED CANOPY TRAFFIC SIGNAL POWER (HOT, SWITCHED)	12	RED	STRANDED	THHW	120 VAC	N/A	PROPOSED LANE CONTROLLER (T1) TERMINAL BLOCK	CANOPY OVERRIDE SWITCH (See Note #2)	T1-9	BARE WIRE	POWER PANEL	REUSE EXISTING
9	COS.CTS-G.SIG	GREEN CANOPY TRAFFIC SIGNAL POWER (HOT, SWITCHED)		BLUE							T1-10		POWER PANEL	REUSE EXISTING
10	COS.CTS-N.SIG	CANOPY TRAFFIC SIGNAL POWER (NEUTRAL)		WHITE							T1-11		POWER PANEL	REUSE EXISTING
11	COS.CTS-CG.SIG	CANOPY TRAFFIC SIGNAL POWER (COMMON GROUND)		GREEN							T1-8		POWER PANEL	REUSE EXISTING
	TRAFFIC CONTROL PEDESTAL (TCP)													
12	ITS.LS.T1-12	LANE 1 ISLAND TRAFFIC SIGNAL RED LIGHT POWER (HOT, SWITCHED)	12	BLACK	STRANDED	THHW	120 VAC	-	PROPOSED LANE CONTROLLER (T1) TERMINAL BLOCK	TRAFFIC CONTROL PEDESTAL FIELD WIRING TERMINAL BLOCK 'TA'	T1-12	TA - TH RED	POWER PANEL	REUSE EXISTING
13	ITS.LS.T1-13	LANE 1 ISLAND TRAFFIC SIGNAL AMBER LIGHT POWER (HOT, SWITCHED)		RED							T1-13	TA - TH AMBER	POWER PANEL	REUSE EXISTING
14	ITS.LS.T1-15	LANE 1 ISLAND TRAFFIC SIGNAL GREEN LIGHT POWER (HOT, SWITCHED)		BLUE							T1-15	TA - TH GREEN	POWER PANEL	REUSE EXISTING
15	ITS.LS.T1-16	LANE 1 ISLAND TRAFFIC SIGNAL POWER (NEUTRAL)		WHITE							T1-16	TA - TH (N)	POWER PANEL	REUSE EXISTING
16	PTD.LS.T1-6	LANE 1 PATRON TOLL DISPLAY POWER (HOT, NON-SWITCHED)	12	BLACK	STRANDED	THHW	120 VAC	-	PROPOSED LANE CONTROLLER (T1) TERMINAL BLOCK	TRAFFIC CONTROL PEDESTAL FIELD WIRING TERMINAL BLOCK 'TA'	T1-6	TA - PTD (H)	POWER PANEL	REUSE EXISTING
17	PTD.LS.T1-7	LANE 1 PATRON TOLL DISPLAY POWER (NEUTRAL)		WHITE							T1-7	TA - PTD (N)	POWER PANEL	REUSE EXISTING
18	PTD.LS.T1-8	LANE 1 PATRON TOLL DISPLAY POWER (GROUND)		GREEN							T1-8	TA - PTD / VIOL (G)	POWER PANEL	REUSE EXISTING
19	(Primary Power Panel).TCP	VES/TCP POWER (HOT, NON-SWITCHED)	12	BLACK	STRANDED	THHW	120 VAC	-	EXISTING CLEAN POWER FEED (SEPARATE BREAKERS FOR EACH SET OF VES CAMERAS)	TRAFFIC CONTROL PEDESTAL FIELD WIRING TERMINAL BLOCK 'TB'	N/A	TB - 120V (H)	POWER PANEL	REUSE EXISTING
20	(Primary Power Panel)N.TCP	VES/TCP POWER (NEUTRAL)		WHITE							N/A	TB - 120V (N)	POWER PANEL	REUSE EXISTING
21	(Primary Power Panel)G.TCP	VES/TCP POWER (GROUND)		GREEN							N/A	TB - 120V (G)	POWER PANEL	REUSE EXISTING
	LANE DIGITAL VIDEO AND AUDIT CAMERA (DVAS)													
22	(Primary Power Panel).PP	LANE DVAS PAYPOINT CAMERA ENCLOSURE POWER (HOT - NON-SWITCHED)	12	BLACK	STRANDED	THHW	120 VAC	1 PER CAMERA	EXISTING CLEAN POWER FEED (SEPARATE BREAKERS FOR EACH CAMERA)	DVAS CAMERA ENCLOSURE FIELD WIRING POWER STRIP	N/A		POWER PANEL	REUSE EXISTING
23	(Primary Power Panel)N.PP	LANE DVAS PAYPOINT CAMERA ENCLOSURE POWER (NEUTRAL)		WHITE									POWER PANEL	REUSE EXISTING
24	(Primary Power Panel)G.PP	LANE DVAS PAYPOINT CAMERA ENCLOSURE POWER (GROUND)		GREEN									POWER PANEL	REUSE EXISTING
	AUTOMATIC VEHICLE IDENTIFICATION (AVI)													
25	(Primary Power Panel)L.AVI	LANE AVI READER QUAD POWER (AC HOT)	12	BLACK	STRANDED	THHW	120 VAC	20	EXISTING CLEAN POWER FEED	EXISTING AVI READER	N/A	QUAD OUTLET	POWER PANEL	REUSE EXISTING
26	(Primary Power Panel)N.AVI	LANE AVI READER QUAD POWER (AC NEUTRAL)		WHITE									POWER PANEL	REUSE EXISTING
27	(Primary Power Panel) G.AVI	LANE AVI QUAD READER (GROUND)		GREEN									POWER PANEL	REUSE EXISTING

GENERAL NOTES:

1) RF MODULE POWER CONNECTOR IS DEPENDENT ON EQUIPMENT TYPE. SEE SPECIFIC USER INSTALLATION MANUAL OR UTS CONSTRUCTION AND INSTALLATION GUIDE FOR TYPE

2) Canopy Override Switch - These are switched hot leads from the Lane Server clean power source fed through lane server switched terminals. When manually switching with dirty power, Line and Neutral leads must both be switched.

Date:8/17/2015

Filename: 073_Power Schedule.dgn

Scale:

No.	Revision	By	Date

Designed by: HNTB

CONSULTANT PROJECT MANAGER: R. Bruce Munger, P.E.

	By	Date		By	Date
Designed	RBM	08/15	Checked	RBM	08/15
Drawn	CDH	08/15	In Charge of	CDH	08/15

HNTB CORPORATION
340 County Road, Suite 6-C
Westbrook, ME 04092
TEL (207) 774-5155
FAX (207) 228-0909

MAINE TURNPIKE

THE GOLD STAR MEMORIAL HIGHWAY

MTA PROJECT MANAGER: William Yates

INTERCHANGE 53
TOLL PLAZA REPLACEMENT

TYPICAL TOLL LANE POWER SCHEDULE

SHEET NUMBER: EM-06

CONTRACT:2015.09

WIRING SHOWN IS FOR CASH LANE. REPLICATE FOR SIMILAR LANES.

ATT/ETC DESCRETE WIRING SCHEDULE - DATA: DOOR WIRING LOGIC, SERIAL, VIDEO, AUDIO (Primary Server)

Intelligent Vehicle Identification System (IVIS) (For Wiring Only. Home Run Lead supplied as part of Sensor)

	WIRE LABEL	DESCRIPTION	AWG	COLOR	CORE	STANDARD	FROM	TO	LANE SERVER TERMINAL #	STATUS
100	T4-49.G1	NOT USED						SENSORS COME WITH 80' PIGTAIL. IF ADDITIONAL WIRE NEEDED SPLICE TO IMSA50-2 TYPE CABLE. INSTALL THE HOME RUN CABLE FROM THE LANE GROUND BOX TO THE LANE SERVER CONNECTION SPECIFIED IN THE ADJ COLUMN. ALL SPLICES MUST BE SOLDERED, TIGHTLY TWISTED, AND INSULATED TO BE WATER RESISTANT. FOR LANES NOT HAVING PRE-CLASSIFICATION, DELETE REQUIREMENTS FOR PRE-CLASSIFICATION SENSORS AND INTELLIGENT QUEUING SENSOR	T4-49	
101	T4-50.G1								T4-50	
102	T4-51.P1	NOT USED							T4-51	
103	T4-52.P1								T4-52	
104	T4-53.G2	NOT USED							T4-53	
105	T4-54.G2								T4-54	
106	T4-55.IQ	NOT USED							T4-55	
107	T4-56.IQ								T4-56	
108	T4-57.PP	PAY POINT PRIMARY SENSOR	16	BLACK	STRANDED	IMSA50-2	PAY POINT PRIMARY SENSOR		T4-57	NEW
109	T4-58.PP								T4-58	NEW
110	T4-59.G3	POST CLASSIFICATION GRADIENT SENSOR #1	16	BLACK	STRANDED	IMSA50-2	POST-CLASSIFICATION GRADIENT SENSOR #1		T4-59	NEW
111	T4-60.G3								T4-60	NEW
112	T4-61.P4	POST CLASSIFICATION PRIMARY SENSOR	16	BLACK	STRANDED	IMSA50-2	POST-CLASSIFICATION PRIMARY SENSOR		T4-61	NEW
113	T4-62.P4								T4-62	NEW
114	T4-63.G4	POST CLASSIFICATION GRADIENT SENSOR #2	16	BLACK	STRANDED	IMSA50-2	POST-CLASSIFICATION GRADIENT SENSOR #2		T4-63	NEW
115	T4-64.G4								T4-64	NEW

Toll Booth Peripheral Cables (MLT, Printer, PC Prox, PFD Display)

116	S3.1.PTD	LANE PATRON TOLL DISPLAY COMMUNICATIONS	RJ-45	BARE WIRE AT PEDESTAL	FIELD WIRED - ONLY FOUR PINS USED: PIN 3 - DEVICE RECEIVE, PIN 5 - GROUND, PINS 7 AND 8 JUMPERED	RS232	PEDESTAL WIRE CENTER TA - PTD DATA	TBD		NEW
							PEDESTAL WIRE CENTER TA - PTD DATA			NEW
117	Lane TR	LANE TRIGGER	RJ-45	BARE WIRE	Pin to Pin	TTL(optically Isolated)	(See Note 1 below) Wire to Designated Trigger Terminals for Front and Rear Trigger (+/-) in Pedestal Wire Center	TBD		NEW
118	S8.PROX	LANE MANUAL LANE TERMINAL PCPROX CARD READER	RJ-45	DB9 (MALE)	SERIAL	RS232	(See Note 1 below)	S-8		NEW
119	PROXPWR	LANE MANUAL LANE TERMINAL PCPROX CARD READER POWER	PS2 (MALE)	PS2 (FEMALE)	SERIAL	RS232	(See Note 1 below)	PS/2		NEW
120	S9.MLT	LANE TOLL BOOTH MANUAL LANE TERMINAL (MLT) COMMUNICATIONS	RJ-45	DB9 (MALE)	SERIAL	RS232	(See Note 1 below)	TBD		NEW
121	S10.RP	LANE TOLL BOOTH RECEIPT PRINTER COMMUNICATIONS	RJ-45	DB25 (MALE)	NULL MODEM	RS232	PREFAB NULL MODEM CABLE - NOT TO EXCEED 50 FT	TBD		NEW
122*	MLTVGA	LANE TOLL BOOTH MANUAL LANE TERMINAL VIDEO	DB15(VGA) (FEMALE)	DB15(VGA) (MALE)	VGA/SVGA/XGA analog	VIDEO	PREFAB VIDEO CABLE - NOT TO EXCEED 50 FT	MONITOR		NEW
123*	MLTAUDIO	LANE TOLL BOOTH MANUAL LANE TERMINAL SPEAKER	3.5mm Plug (MALE)	3.5mm Plug (MALE)	AUDIO	AUDIO	PREFAB AUDIO CABLE	AUDIO		NEW

Notes:

1.) Lane Server to peripheral cable pin connections - refer to peripheral Installation Guide. RJ-45 at Lane Server: 1= CTS, 2=CD, 3=RxD, 4=Gnd, 5=Gnd, 6=TxD, 7=DTR, 8=RTS. (No handshaking is used)

2.) * Provided by System Integrator

Date:8/17/2015

Filename: 074_Data Schedule.dgn

Scale:			
No.	Revision	By	Date

Designed by: HNTB

CONSULTANT PROJECT MANAGER: R. Bruce Munger, P.E.

	By	Date		By	Date
Designed	RBM	08/15	Checked	RBM	08/15
Drawn	CDH	08/15	In Charge of	RAL	08/15

HNTB CORPORATION
340 County Road, Suite 6-C
Westbrook, ME 04092
TEL (207) 774-5155
FAX (207) 228-0909

MAINE TURNPIKE

THE GOLD STAR MEMORIAL HIGHWAY

MTA PROJECT MANAGER: William Yates

INTERCHANGE 53
TOLL PLAZA REPLACEMENT

TYPICAL TOLL LANE DATA SCHEDULE

SHEET NUMBER: EM-07

CONTRACT:2015.09

WIRING SHOWN IS FOR CASH LANE. REPLICATE FOR SIMILAR LANES.

ATT-ETC LANE NETWORK WIRING SCHEDULE

	WIRE LABEL	DESCRIPTION	COLOR	CONNECTOR AT FX PATCH PANEL (COMPUTER ROOM)	COMMUNICATIONS SWITCH IN THE LANE SERVER	WIRING CONVENTION	PROTOCOL	FIELD WIRING INSTRUCTIONS	STATUS
	LANE SERVER MULTIMODE FIBER (FOR REMOTE SWITCH ACCESS)								
200	(Ln#)LS	LANE SERVER NETWORK CONNECTION - SEND	BLUE	ST (MALE)	ST (MALE)	6-FIBER (TYP) (4 Min Fiber) MULTI-MODE 100mbs	62.5/125 MICRONS INDOOR/ OUTDOOR RISER RATED	FROM PLAZA COMMUNICATIONS RACK FIBER (FX) PATCH PANEL TO THE BOOTH LANE SERVER FIBER LINE INTERFACE UNIT (LIU) IN THE CABINET OR GUTTER. PROVIDE 1 EA 3M DUPLEX FX PATCH CABLE (STM to STM) FROM THE LIU TO THE LANE 1 LANE SERVER NETWORK SWITCH.	NEW
201		LANE SERVER NETWORK CONNECTION - RECEIVE	ORANGE						NEW
202		LANE SERVER NETWORK CONNECTION - SPARE SEND	GREEN						NEW
203		LANE SERVER NETWORK CONNECTION - SPARE RECEIVE	BROWN						NEW
204		LANE SERVER NETWORK CONNECTION - SPARE SEND (optional)	SLATE						NEW
205		LANE SERVER NETWORK CONNECTION - SPARE RECEIVE (optional)	WHITE						NEW
	LANE SERVER ETHERNET CONNECTION (FOR LOCAL SWITCH -SAME ROOM- ACCESS)								
206	(Ln#).LS	LANE SERVER NETWORK CONNECTION (CAT5E/6 CABLE ALTERNATIVE TO FIBER ABOVE IF LOCAL SWITCH PROVIDED AND CONNECTION IS LESS THAN 300 FEET)	CAT5E COLOR STANDARD	RJ-45 (MALE)	RJ-45 (MALE)	CAT5E/6 DIRECT BURIAL	UTP	CAT5E BULK CABLE FROM THE SERVER ROOM TO THE LANE CABINET FIBER SWITCH LANE SERVER SWITCH. TERMINATE AND TEST CABLE RUN.	NEW
	DIGITAL VIDEO AUDIT SYSTEM (DVAS)								
208	DVAS.(Ln#).PP	LANE DVAS PAYPOINT CAMERA NETWORK CONNECTIONS	CAT5E COLOR STANDARD	RJ-45 (MALE)	RJ-45 (MALE)	CAT5E/6 DIRECT BURIAL	UTP	CAT5E BULK CABLE FROM THE LANE CONTROLLER AND FIBER SWITCH TO THE LANE DVAS PAYPOINT CAMERA. TERMINATE AND TEST CABLE RUN. ALLOW 10' OF CABLE TO REACH FROM THE DVAS DATA JUNCTION BOX TO THE LANE 1 CAMERA ENCLOSURE.	NEW
	AUTOMATIC VEHICLE IDENTIFICATION (AVI)								
209	(Ln#).AVIE	LANE AVI READER ETHERNET DATA CONNECTION	CAT5E COLOR STANDARD	RJ-45 (MALE)	RJ-45 (MALE)	CAT5E/6 DIRECT BURIAL	10/100 UTP	CAT5E BULK CABLE FROM THE LANE CONTROLLER CONNECTION PANEL AVI 110 JACK TO THE LANE AVI READER SERIAL TO ETHERNET CONVERTER	NEW
210	(Ln#).AVIS	LANE AVI READER DATA CONNECTION	COLOR STANDARD	DB-9F	DB-9M	SERIAL PATCH CABLE	10/100 UTP	SERIAL PATCH CABLE BETWEEN EACH MARKIV READER AND SERIAL TO ETHERNET CONVERTER	NOT USED
	TRAFFIC CONTROL PEDESTAL (TCP) MAINTENANCE PORT								
211	(Ln#).TCPFVES	LANE TRAFFIC CONTROL PEDESTAL VES CAMERA CONNECTION	CAT5E COLOR STANDARD	RJ-45 (MALE)	RJ-45 (MALE)	CAT5E/6 DIRECT BURIAL	GIGABIT UTP	CAT5E BULK CABLE FROM THE LANE CONTROLLER CONNECTION PANEL VES 110 JACK TO THE LANE ISLAND TRAFFIC CONTROL PEDESTAL FRONT CAMER PORT.	NEW
212	(Ln#).TCPRVES	LANE TRAFFIC CONTROL PEDESTAL VES CAMERA CONNECTION	CAT5E COLOR STANDARD	RJ-45 (MALE)	RJ-45 (MALE)	CAT5E/6 DIRECT BURIAL	GIGABIT UTP	CAT5E BULK CABLE FROM THE LANE CONTROLLER CONNECTION PANEL VES 110 JACK TO THE LANE ISLAND TRAFFIC CONTROL PEDESTAL REAR CAMER PORT.	NEW
213	(Ln#).TCPM	LANE TRAFFIC CONTROL PEDESTAL MAINTENANCE NETWORK CONNECTION	CAT5E COLOR STANDARD	RJ-45 (MALE)	RJ-45 (MALE)	CAT5E/6 DIRECT BURIAL	GIGABIT UTP	CAT5E BULK CABLE FROM THE LANE CONTROLLER AND FIBER SWITCH TO THE LANE ISLAND TRAFFIC CONTROL PEDESTAL MAINTENANCE PORT.	NEW

NOTES:

1). ALL NETWORK CABLES ARE GIGABIT COMPLIANT, SUITABLE FOR OUTDOOR/WET ENVIRONMENT, OSP GRADE FOR DIRECT BURIAL

2). LANE SERVER NETWORK CONNECTIONS WILL BE FROM THE LANE CONTROLLERS TO THE PLAZA COMPUTERS, TO BE LOCATED IN THE THE EXISTING CABINETS FOR EXISTING VES CONTROLLER

Date:8/17/2015

Filename: 075_Network Schedule.dgn

Scale:

No.	Revision	By	Date

Designed by: HNTB

CONSULTANT PROJECT MANAGER: R. Bruce Munger, P.E.

	By	Date		By	Date
Designed	RBM	08/15	Checked	RBM	08/15
Drawn	CDH	08/15	In Charge of	RAL	08/15

HNTB CORPORATION
340 County Road, Suite 6-C
Westbrook, ME 04092
TEL (207) 774-5155
FAX (207) 228-0909

MAINE TURNPIKE

THE GOLD STAR MEMORIAL HIGHWAY

MTA PROJECT MANAGER: William Yates

INTERCHANGE 53
TOLL PLAZA REPLACEMENT

TYPICAL TOLL LANE NETWORK SCHEDULE

SHEET NUMBER: EM-08

CONTRACT:2015.09

Date:8/17/2015

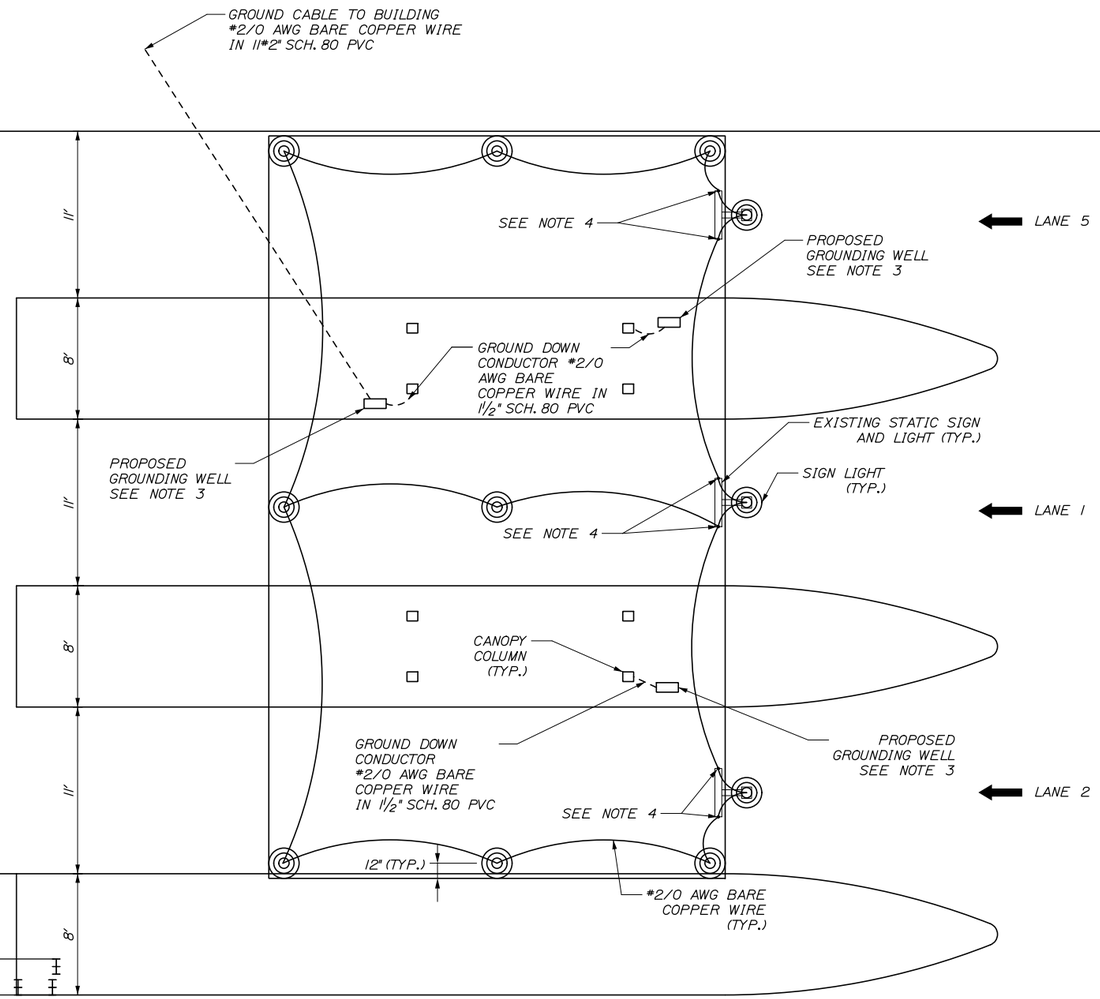

LIGHTNING SUPPRESSION ON CANOPY NOTES:

1. GROUNDING WELLS SHALL BE INSTALLED IN THE APPROACH SIDE WALKWAY PORTION OF ISLANDS FOR LANES 5 AND 1. THE PATH OF THE NEW GROUND DOWN CONNECTOR SHALL BE AS SHOWN AT ISLAND 5 AND 1, AND SHALL BE ATTACHED TO THE PROPOSED SUPPORT COLUMNS (SEE SHEET STR-18).

2. THE GROUNDING WELLS SHALL CONSIST OF A 17"X10.125"X16.25", TR15 QUAZITE JUNCTION BOX WITH A SINGLE 3/4"X10' COPPER CLAD STEEL GROUNDING ROD UL 467 COMPLIANT CENTERED WITHIN THE WELL.

3. BOND EACH SIGN MOUNTING FRAME MEMBER WITH #2/0 AWG BARE COPPER WIRE (TYP).

4. ALL LIGHTNING PROTECTION WORK SHALL BE PROVIDED IN FULL CONFORMANCE WITH UL 96A AND WITH NFPA 780.

5. LIGHTNING PROTECTION CONDUCTOR BENDS SHALL NOT FORM AN INCLUDED ANGLE LESS THAN 90 DEGREES OR HAVE A RADIUS BEND LESS THAN 8".

6. LIGHTNING PROTECTION AIR TERMINALS TO BE INSTALLED ON THE EXISTING CANOPY SIGN LIGHTING FIXTURES SHALL BE 10 INCHES TALL. LIGHTNING PROTECTION AIR TERMINALS TO BE INSTALLED ON THE EXISTING CANOPY ROOF SHALL BE 24 INCHES TALL.

7. A ROOF PENETRATION TO ACCOMIDATE A 1 1/2" CONDUIT IS REQUIRED FOR GROUNDING DOWN PROPOSED LANES 1 AND 5 CONDUCTOR. THE REPAIR OF THE ROOF SHALL BE INCIDENTAL TO THE LIGHTNING SUPPRESION SYSTEM. THE ROOF SHALL BE REQUIRED BY THE ROOFING SUBCONTRACTOR OR AS DIRECTED BY THE RESIDENT.

Filename: 076_Exit53_Lightning Suppression.dgn

Scale: 25 0 25 50

No.	Revision	By	Date

Designed by: HNTB

CONSULTANT PROJECT MANAGER: R. BRUCE MUNGER, P.E.

	By	Date		By	Date
Designed	RBM	08/15	Checked	RBM	08/15
Drawn	PMK	08/15	In Charge of	RAL	08/15

HNTB CORPORATION
340 County Road, Suite 6-C
Westbrook, ME 04092
TEL (207) 774-5155
FAX (207) 228-0909

MAINE TURNPIKE

THE GOLD STAR MEMORIAL HIGHWAY

MTA PROJECT MANAGER: William Yates

INTERCHANGE 53
TOLL PLAZA REPLACEMENT

LIGHTNING SUPPRESSION

SHEET NUMBER: EM-09

CONTRACT:2015.09

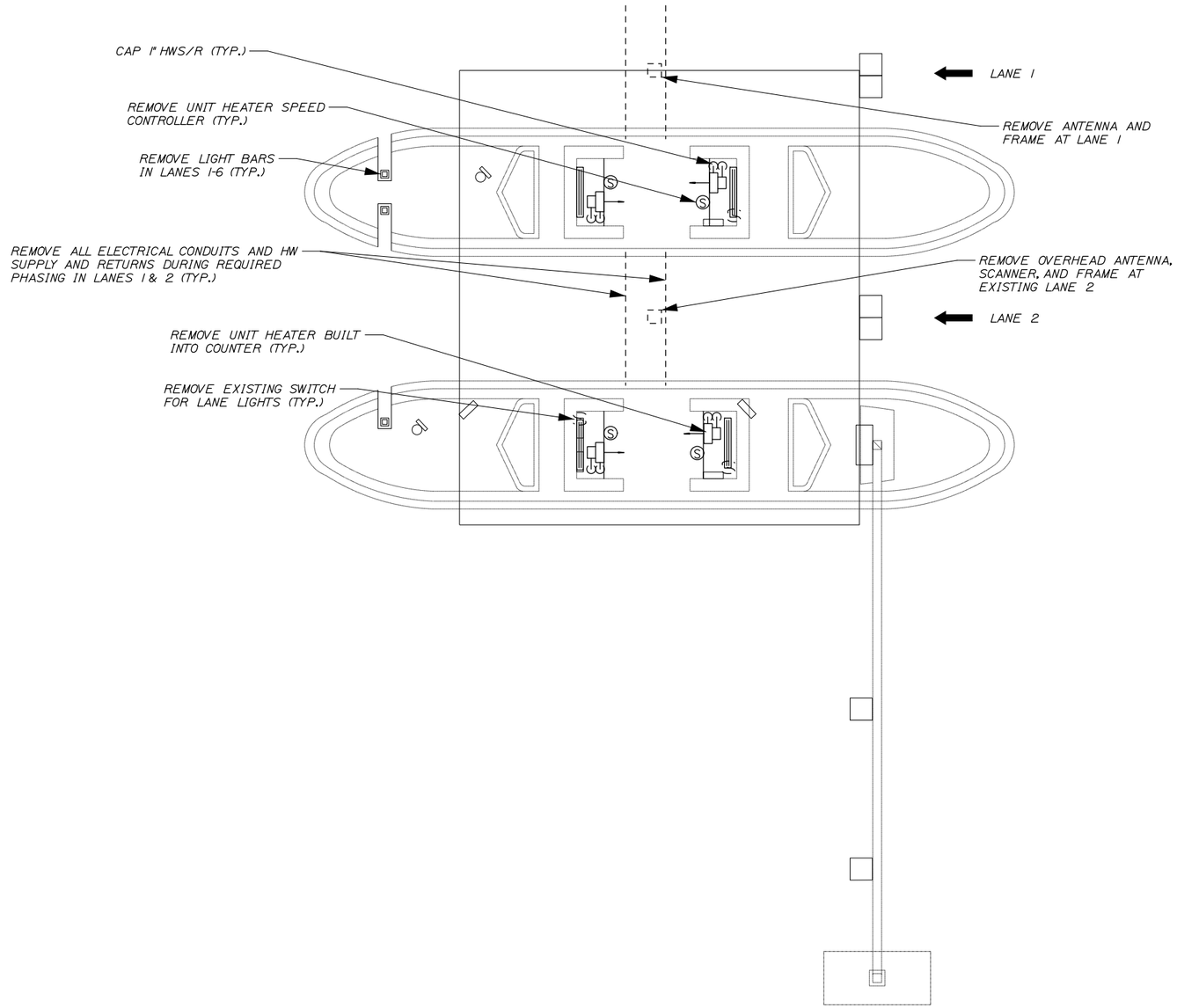

NOTES:

1. BEFORE ELECTRICAL AND MECHANICAL DEMOLITION, CONTRACTOR SHALL SUBMIT A DEMOLITION PLAN TO THE RESIDENT FOR APPROVAL.

2. DEMOLITION CANNOT BEGIN WITHOUT APPROVAL FROM THE AUTHORITY, THE SYSTEM INTEGRATOR, AND THE RESIDENT.

3. REFER TO THE GENERAL NOTES FOR SALVAGE AND DISPOSAL INSTRUCTIONS OF SPECIFIC ITEMS. ITEMS TO BE DISPOSED OF MUST BE DONE SO IN A LEGAL LAWFUL MANNER BY THE CONTRACTOR.

4. REMOVE ALL EXISTING EQUIPMENT TO BE SALVAGED, DISPOSED OF AND/OR RELOCATED AS DIRECTED BY THE RESIDENT OR INDICATED ON THE DRAWINGS.

5. EQUIPMENT TO BE SALVAGED SHALL BE CAREFULLY PACKED AND DELIVERED TO THE SIGN SHOP OR TRANSCORE'S WAREHOUSE AS DESCRIBED IN THE GENERAL NOTES.

6. ANY EXISTING WORK DISTURBED OR DAMAGED BY THE ALTERATIONS OR NEW WORK SHALL BE REPAIRED OR REPLACED TO THE RESIDENT'S AND AUTHORITY'S SATISFACTION AT NO ADDED COST TO THE AUTHORITY.

7. ANY EXISTING WIRING AND CONDUIT DISCONTINUED UNDER THIS PROJECT SHALL BE COMPLETELY REMOVED AND BECOME THE PROPERTY OF THE CONTRACTOR.

8. PRIOR TO DEMO OF ALL EXISTING ISLANDS THE CONTRACTOR SHALL VERIFY ALL COMMUNICATION AND POWER LINES IN PLAZA ROOF COLUMNS FOR ALL ISLANDS. THE CONTRACTOR SHALL SUBMIT FOR REVIEW A LINE DIAGRAM OF ALL DATA, POWER AND COLUMNS SHOWING ORIGIN AND DESTINATION. LINES ASSOCIATED WITH EQUIPMENT TO REMAIN (INCLUDING EQUIPMENT REQUIRED TO BE OPERATING FOR INTERMEDIATE PHASES OF CONSTRUCTION) SHALL BE RE-ROUTED. THIS WORK SHALL BE COORDINATED WITH THE RESIDENT AND THE SYSTEM INTEGRATOR. WORK ASSOCIATED WITH VERIFICATION AND SUBMITTAL REVIEW SHALL BE INCIDENTAL TO ITEM 800.10. WORK ASSOCIATED WITH RE-ROUTING WIRES WILL BE PAID FOR BY THE INDIVIDUAL LABOR AND MATERIAL PAY ITEMS.

9. NOT SHOWN: REMOVE LANE CONTROLLER CABINETS, TRANSFORMER BOXES AND COS BOX IN APPROPRIATE PHASES. SEE SPECIFICATIONS FOR MORE INFORMATION.

10. LOCATION AND NUMBER OF UNDERGROUND CONDUITS ARE APPROXIMATE. DIG SAFE/DIG SMART TO BE CONTACTED TO LOCATE UNDERGROUND UTILITIES PRIOR TO DEMOLITION.

11. CLEAN AND DIRTY POWER PANELS, LANE CONTROLLER CABINETS AND ALL OTHER EQUIPMENT, WIRING AND COMMUNICATION ASSOCIATED WITH TOLLING IN EXISTING CASH LANES 1 & 2 SHALL BE REMOVED BY THE CONTRACTOR. CONTRACTOR SHALL COORDINATE WITH THE RESIDENT CONCERNING WHICH EQUIPMENT SHALL BE REMOVED AND WHEN. PAYMENT FOR THIS WORK SHALL BE INCIDENTAL TO ITEM 800.10 ELECTRICAL DEMOLITION.

Date:8/17/2015

Filename: 077_ElectricalDemo.dgn

Scale:

No.	Revision	By	Date

Designed by:

HNTB

CONSULTANT PROJECT MANAGER: R. Bruce Munger, P.E.

	By	Date		By	Date
Designed	RBM	08/15	Checked	RBM	08/15
Drawn	PMK	08/15	In Charge of	RAL	08/15

HNTB CORPORATION
340 County Road, Suite 6-C
Westbrook, ME 04092
TEL (207) 774-5155
FAX (207) 228-0909

MAINE TURNPIKE

THE GOLD STAR MEMORIAL HIGHWAY

MTA PROJECT MANAGER: William Yates

INTERCHANGE 53
TOLL PLAZA REPLACEMENT

ELECTRICAL AND MECHANICAL DEMOLITION PLAN

SHEET NUMBER: EM-10

CONTRACT:2015.09

CABINET UNIT HEATER SCHEDULE

TAG	DESIGN MANUFACTURER & MODEL	SUPPLY FAN		ELECTRIC		HEATING			WEIGHT (LBS)	CONTROLS AND ACCESSORIES BY MANUFACTURER OF UNIT
		CFM	HP	POWER	WATTS	BTUH	AFUE	FUEL		
CUH-1	RINNAI RHFE-1004FTA OR APPROVED EQUAL	263	0.10	115/60/1	117	36,600	81%	LP GAS	88	WITH WALL-MOUNTED THERMOSTAT, LP CONVERSION KIT, VENT EXTENSION KIT, COVER KIT FOR VENT IN TOLL BOOTH

ROOF-MOUNTED HEAT PUMP SCHEDULE

TAG	DESIGN MANUFACTURER AND MODEL	COOLING NOMINAL SIZE	ELECTRIC				WEIGHT	REMARKS
			POWER	COMPRESSOR	FAN	HEATER		
RHUP-1	DOMETIC B59516 OR APPROVED EQUAL	15,000	115/60/1	13.2 FLA	2.7 FLA	13.7 FLA	74 LBS	WITH AIR DISTRIBUTION BOX AND THERMOSTAT SUPPLIED BY MANUFACTURER

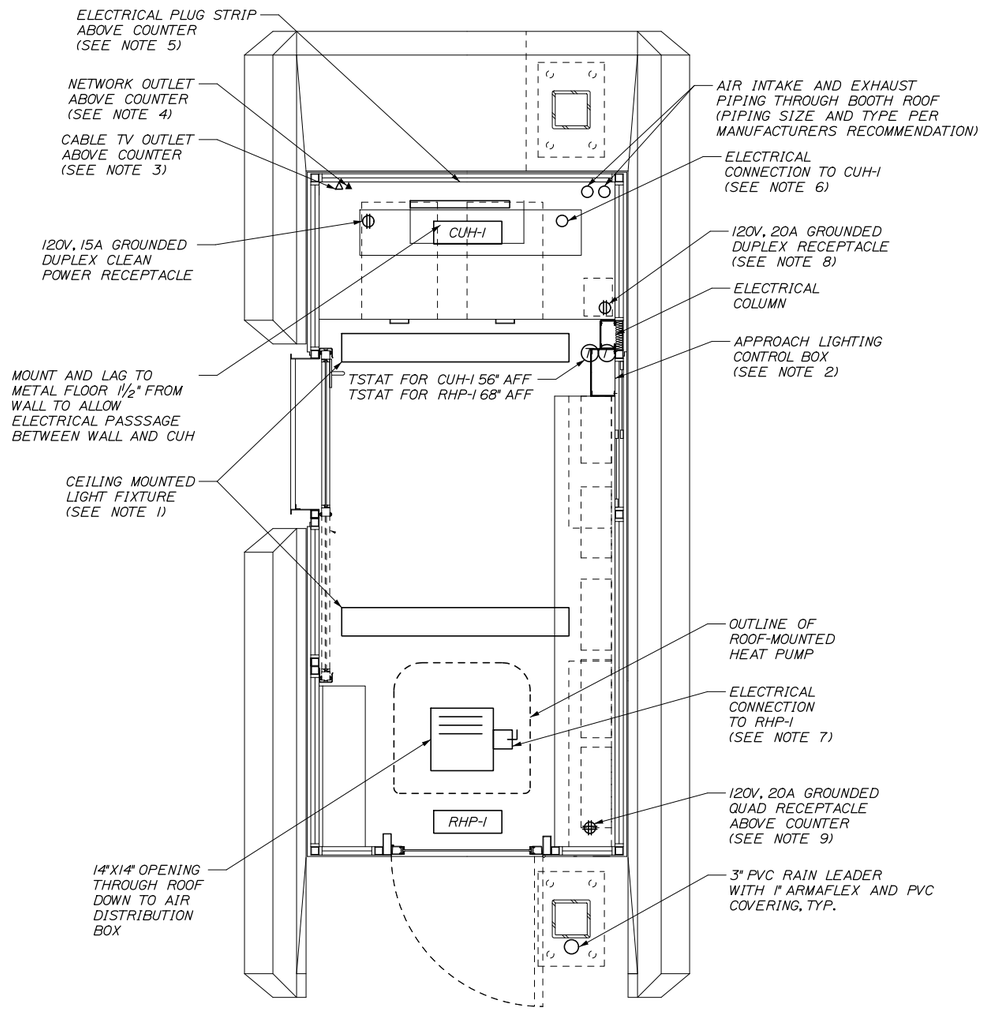

PROPOSED TOLL BOOTH
¾" = 1'-0"

NOTES:

1. PROVIDE NEW CEILING MOUNTED LIGHT FIXTURES IN PROPOSED BOOTHS THAT REMAIN. LIGHTS SHALL BE CREE #SMK-LE-S/SMK-LE-EC/CR-LE-32L-35K-10V, OR APPROVED EQUAL.

2. AT THE PROPOSED BOOTHS, PROVIDE APPROACH LIGHTING CONTROL SWITCHES TO BE INSTALLED ADJACENT TO THE ELECTRICAL COLUMN. IN THE PROPOSED BOOTHS PROVIDE A 0-20 VOLT DIMMER WIRED TO THE CEILING LIGHTS. WIRE THE BOOTH LIGHTS TO A 20A/1P BREAKER IN THE RESPECTIVE DIRTY POWER PANEL.

3. PROVIDE A COAX OUTLET WITH RG6 CABLE EXTENDED THROUGH THE TUNNEL TO THE TELEPHONE BOARD IN THE PLAZA BUILDING.

4. PROVIDE A CAT5e NETWORK OUTLET WITH CAT5e CABLE EXTENDED THROUGH THE UTILITY CHASE TO THE TELEPHONE BOARD IN THE PLAZA BUILDING.

5. PROVIDE PLUG-STRIP ABOVE THE BOOTH COUNTER. PLUG STRIP SHALL BE LEGRAND #2000 USB SERIES. PLUG STRIP SHALL HAVE A DUPLEX USB JACK AT ONE END AND FOUR 15A, GROUNDED ELECTRICAL OUTLETS SPACED ALONG THE REMAINING LENGTH. WIRE THE PLUG STRIP TO A 20A/1P BREAKER IN THE RESPECTIVE DIRTY POWER PANEL.

6. VERIFY EXACT LOCATION OF ELECTRICAL CONNECTION POINT FOR CUH-1. WIRE CUH-1 TO A 15A/1P BREAKER IN THE RESPECTIVE DIRTY POWER PANEL.

7. PROVIDE A 30A/1P WEATHERPROOF DISCONNECT SWITCH AT THE ROOF-TOP RHP-1. WIRE RHP-1 TO A 30A/1P BREAKER IN THE RESPECTIVE DIRTY POWER PANEL.

8. PROVIDE A 120V, 20A DUPLEX RECEPTACLE TO BE INSTALLED IN THE ELECTRICAL COLUMN 18" ABOVE THE FLOOR. CONNECT THE RECEPTACLE TO A 20A/1P BREAKER IN THE RESPECTIVE DIRTY POWER PANEL.

9. PROVIDE A 120V, 20A QUAD RECEPTACLE INSTALLED ABOVE THE COUNTER. CONNECT THE RECEPTACLE TO THE PLUG STRIP CIRCUIT (SEE NOTE 5).

10. INSTALL ½" (SIZE 18 EHD) CORRUGATED STAINLESS STEEL TUBING TO EACH CABINET UNIT HEATER (CUH-1) LOCATED IN THE TOLL BOOTHS FROM THE RELOCATED PROPANE TANKS. THE ½" TUBING SHALL BE INSTALLED IN 1" SCHEDULE 80 PVC CONDUIT AS SHOWN ON THE GENERAL PLAN SHEET GP-01. PAYMENT WILL BE INCIDENTAL TO THE BOOTH INSTALLATION ITEM 800.40

11. AT THE CABINET UNIT HEATERS PROVIDE A UL LISTED GAS COCK SHUT OFF VALVE AND A DRIP LEG. PAYMENT WILL BE INCIDENTAL TO THE BOOTH INSTALLATION ITEM 800.40

Scale:

No.	Revision	By	Date

Designed by: HNTB

CONSULTANT PROJECT MANAGER: R. Bruce Munger, P.E.

	By	Date		By	Date
Designed	RBM	08/15	Checked	RBM	08/15
Drawn	PMK	08/15	In Charge of	PMK	08/15

HNTB CORPORATION
340 County Road, Suite 6-C
Westbrook, ME 04092
TEL (207) 774-5155
FAX (207) 228-0909

MAINE TURNPIKE

THE GOLD STAR MEMORIAL HIGHWAY

MTA PROJECT MANAGER: William Yates

INTERCHANGE 53
TOLL PLAZA REPLACEMENT

ELECTRICAL AND MECHANICAL BOOTH DETAILS

SHEET NUMBER: EM-11

CONTRACT:2015.09

Date:8/17/2015
Filename: 078_Booth Electrical-Mechanical Details.dgn

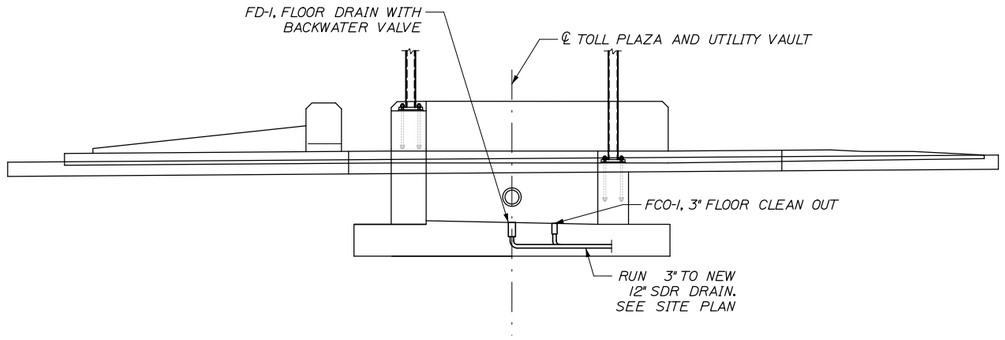

ISLAND ELEVATION
3/16" = 1'-0"

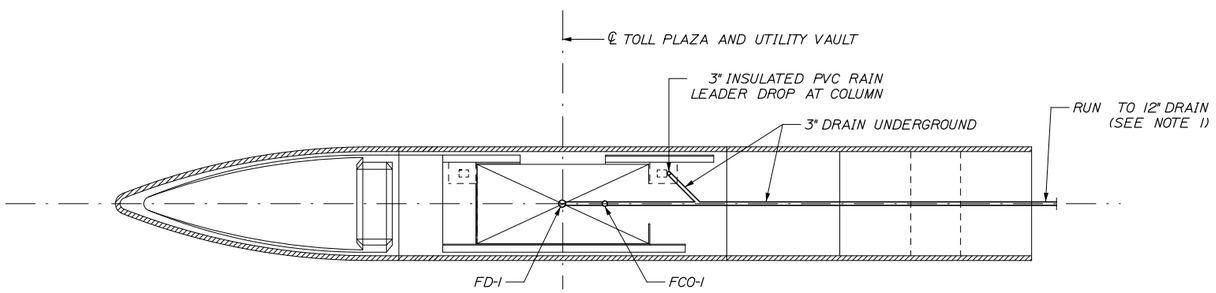

ISLAND PLAN
3/16" = 1'-0"

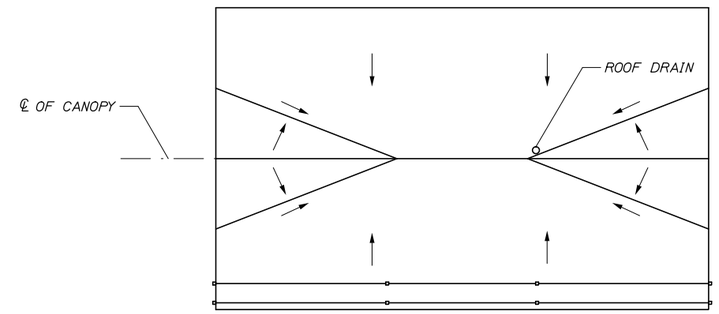

CANOPY ROOF PLAN
NTS

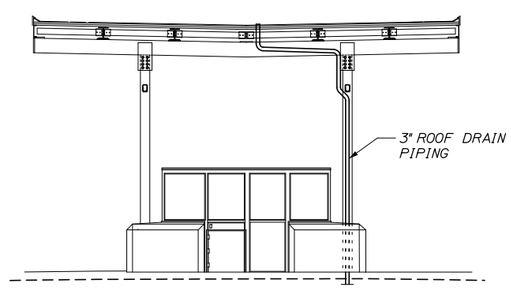

BOOTH AND CANOPY ELEVATION
3/16" = 1'-0"

NOTES:

1. CONNECT 3" PIT DRAIN TO 12" RCP STORM DRAIN WITH INSERTA TEE OR APPROVED EQUAL. PAYMENT SHALL BE INCIDENTAL TO 3" DRAIN PIPE.

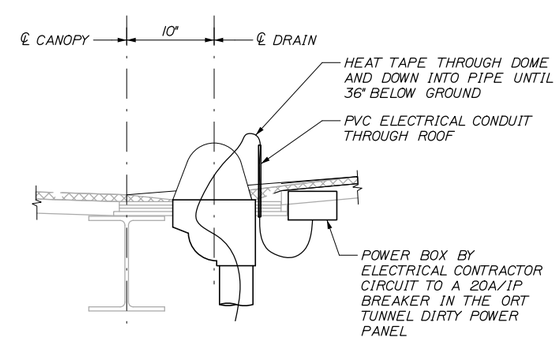

SECTION A - A
NTS

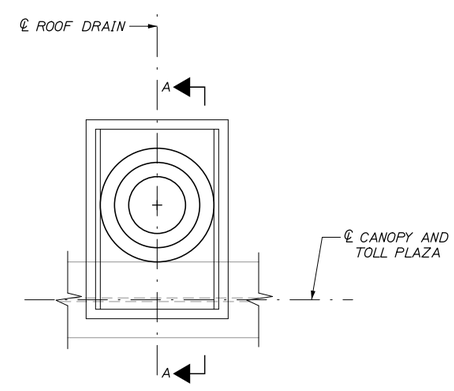

ROOF DRAIN PLAN
NTS

Date:8/17/2015

Filename: 079_CanopyBooth-ElecMech.dgn

Scale:			
No.	Revision	By	Date

Designed by:

HNTB

CONSULTANT PROJECT MANAGER: R. Bruce Munger, P.E.

	By	Date		By	Date
Designed	RBM	08/15	Checked	RBM	08/15
Drawn	PMK	08/15	In Charge of	RAL	08/15

HNTB CORPORATION
340 County Road, Suite 6-C
Westbrook, ME 04092
TEL (207) 774-5155
FAX (207) 228-0909

MAINE TURNPIKE

THE GOLD STAR MEMORIAL HIGHWAY

MTA PROJECT MANAGER: William Yates

INTERCHANGE 53
TOLL PLAZA REPLACEMENT

MECHANICAL & ELECTRICAL DETAIL
BOOTH AND CANOPY

SHEET NUMBER: EM-12

CONTRACT:2015.09

GENERAL NOTES:

1. The notes on the drawings are not intended to replace specifications. in addition to general notes. See specifications for requirements
2. Structural drawings shall be used in conjunction with job specifications and architectural, mechanical, electrical, plumbing, and site drawings. Consult, openings, chases, inserts, reglets, sleeves, depressions, and other details not shown on structural drawings.
3. All dimensions and conditions must be verified in the field. Any discrepancies shall be brought to the attention of the engineer before proceeding with the affected part of the work.
4. Do not scale plans.
5. Sections and details shown on any structural drawings shall be considered typical for similar conditions.
6. All propietary products shall be installed in accordance with the manufacturers written instructions.
7. The structure is designed to be self supporting and stable after the erection is complete. It is the contractor's sole responsibility to determine erection procedures and sequencing to ensure the safety of the building and its components during erection. This includes the addition of necessary shoring, sheeting temporary bracing, guys or tiedowns. Such material shall remain the property of the contractor after completion of the project.
8. All applicable federal, state, and municipal regulations shall be followed, including the federal department of labor occupational safety and health act.

DESIGN LOADS:

1. Building code: IBC (2009) International Building Code.
2. Design Live Loads: (Ground Snow load = 60 psf)
   Roof ..... 45 psf + drift as applicable
   Floor ..... 100 psf
3. Design wind loads are based on exposure C using 115 mph basic wind speed.
4. Seismic Design Utilizes a Bearing wall system: Ordinary reinforced masonry shear walls. Analysis Procedure shall be equivalent Lateral Force Procedure per IBC 2009.

FOUNDATION NOTES:

1. Foundations have been designed with a presumptive soil bearing capacity of 2000 psf to be verified by the general contractor in the field.
2. Interior spread footings and exterior strip footings shall be founded on undisturbed native soil or compacted structural fill.
3. Exterior strip and spread footings shall be founded a minimum of 4'-0" below finished site grade.
4. Slabs on grade shall bear on a minimum of 12" of compacted structural fill or compacted ⅜" crushed stone. If loose or undesirable fills are encountered at the slab subgrade level, they shall be over excavated to the surface of the natural soil and replaced with structural fill. Refer to drawings and specifications for vapor barrier requirements. Moist cure slabs in accordance with ACI.
5. Structural fill shall be used at all locations below footings and slabs and adjacent to the foundation walls. Prior to placement of structural fill, remove all topsoil and other unsuitable material. Compacted structural fill shall consist of clean granular material free of organics, loam, trash, snow, ice, frozen soil or any other objectionable material. It shall be well graded within the following limits:

SCREEN OR SIEVE SIZE	PERCENT FINER BY WEIGHT
6 INCH	100
3 INCH	70–100
NO. 4	35–70
NO. 40	5–35
NO. 200	0–5

6. Structural fill (or ⅜" crushed stone) beneath slabs shall be placed in layers not exceeding 6 inches in loose measure and compacted by self-propelled compaction equipment at approximate optimum moisture content to a dry density of at least 95% of the maximum in place dry density as determined by the modified proctor test (ASTM D-1557). For structural fill or 100% of the rodded unit weight as determined by ASTM C-29 for ⅜" crushed stone.
7. Underdrains shall be placed as shown on the site drawings. Underdrains shall be installed to positively drain to a suitable discharge point away from the structure. Refer to site drawings for additional information.
8. Exterior concrete slabs on grade, shall be underlain by at least 4 feet of structural fill meeting gradation and compaction requirements noted above. Reinforce slabs with #4 @ 12" each way at center of slab.
9. Backfill both sides of foundation walls simultaniously.

CONCRETE NOTES:

1. All concrete work shall conform to ACI 318-Latest Edition.
2. Concrete strength at 28 days shall be:
   a) 3500 psi for frost walls.
   b) 3000 psi for footings & piers.
   c) 4000 psi for all slabs on grade.
3. All concrete shall be air entrained 4% to 6% per the specifications.
4. Concrete shall not be placed in water or on frozen ground.
5. Concrete materials:
   A. Portland Cement: ASTM C 150, Type I or Type II unless otherwise acceptable to Architect. Use one brand of cement throughout project, unless otherwise acceptable to Architect.
   B. Normal Weight Aggregates: ASTM C 33. Provide from a single source for exposed concrete. Do not use aggregates containing soluble salts or other substances such as iron sulfides, pyrite, marcasite, or ochre which can cause stains on exposed concrete surfaces.
   C. Light Weight Aggregates: ASTM C 330.
   D. Water: Potable.
   E. Air-Entraining Admixture: ASTM C 260.
   F. High-Range Water-Reducing Admixture (Super Plasticizer): ASTM C 494, Type F or Type G containing not more than 1% chloride ions.
      1. Fiber reinforcement shall be added and distributed prior to incorporation of Super Plasticizer.
   G. Normal range water reducing admixture: ASTM C 494 Type A containing no calcium chloride.
   H. Accelerating Admixture: ASTM C 494 Type C or E.
   I. Calcium Chloride not permited.
6. Provide PVC sleeves where pipes pass through concrete walls or slabs.
7. Reinforcing bars shall conform to ASTM A615 Grade 60 deformed bars, and shall be detailed, fabricated and erected in accordance with ACI 315-Latest edition.
8. Welded wire fabric shall be provided in flat sheets.
9. Fiber reinforced concrete shall conform to ASTM C-1116.
10. Complete shop drawings and schedules of all reinforcing steel shall be prepared by the contractor and submitted to the engineer for review prior to commencement of that portion of the work. All accessories must be shown on the shop drawings. Submit (2) black line prints to the Engineer/Architect.
11. Splices of reinforcing bars shall be in accordance with ACI 318. Splices of WWF shall be 6" minimum.
12. Concrete finishes: See specifications and Architectural drawings for applicable finishes.
13. Anchor bolts shall conform to ASTM A307 hot dipped galvanized unless noted otherwise on plan.
14. Provide control/construction joints in foundation walls at a maximum spacing of 15 ft. from any corner or 30 ft. along length of wall. At control joints, discontinue every other horizontal bar. At construction joints all reinforcing shall be continuous through the joint.
15. The general contractor shall be responsible for coordination of door bondout locations, slab depression & other required bondouts. Coordinate location of bondouts with Architectural, Mechanical & Plumbing, Electrical and kitchen equipment vendors as necessary to properly install each specific item.
16. Provide ¼" wide x 1" deep control joints in slabs at 15'X15' intervals (225 SF max) as shown on drawings. Clean joint free of dust and debris; fill with elastomeric caulk compatible with concrete.

MASONRY NOTES:

1. All hollow load bearing concrete masonry units shall be ASTM C90 grade N, type I standard weight standard blocks including stretchers & corner blocks unless noted otherwise.
2. All load bearing concrete masonry units shall conform ASTM C90 grade N, type I standard weight standard blocks including stretchers & corner blocks.
3. Masonry prism strength (f'm) shall be 1,500 psi.
4. Mortar shall conform to ASTM Specification C270, type M or S.
5. Concrete masonry units shall be laid in running bond.
6. Wall penetrations shall be coordinated with the Architect, Owners and vendors/designers.
7. Provide joint reinforcing per drawings & specifications in all concrete masonry unit construction.
8. All masonry reinforcement shall be spliced 48 bar diameters.
9. Reinforcing bars shall conform to ASTM A615 grade 60 deformed bars and shall be detailed, fabricated and placed in accordance with ACI 315-Latest Edition.
10. Masonry walls which support structural members shall have cells grouted solid full height under bearing with 2-#6 minimum vertical reinforcing bar in each cell UNO on plan.
11. Bond beams shall be filled with grout capable of achieving 3000 psi compressive strength at 28 days. Reinforcing shall be supported prior to placing concrete to provide a minimum 1/2" clearance around all bars.
12. Cells of masonry units containing vertical reinforcing shall be filled with grout Unless otherwise noted. Maximum grout lift without cleanouts and inspection shall be 4'-0". Support all vertical bars in units as shown on the drawings.
13. Provide steel lintels for all masonry openings unless cmu lintel is indicated. Refer to lintel schedule for lintel sizes. All lintels used in exterior masonry walls shall be hot dipped galvanized.

STRUCTURAL STEEL NOTES:

1. Structural steel fabrication, erection, and connection design shall conform to AISC "Specification for the design, fabrication, and erection of structural steel"-Ninth edition.
2. Structural steel:
   a) Structural steel shall conform to ASTM A-36.
   b) Structural tubing shall conform to ASTM A-500 GR-B
   c) Structural pipe shall conform to ASTM A-53, TYPE E OR S
3. The fabricator shall design connections for the reactions shown on the drawings or the maximum end reaction that can be produced by a laterally supported uniformly loaded beam for each given beam size and span.
4. Field connections shall be bolted using 3/4" diameter ASTM A325 high strength bolts except where field welding is indicated on the drawings.
5. All welding shall conform to AWS D1.1-Latest edition. Welding electrodes shall be E70XX.
6. Structural steel lintels in exterior wall shall be galvanized in accordance with ASTM A 125, Hot Dipped

TIMBER FRAMING:

1. All Timber framing shall be in accordance with the AITC timber construction manual or the national design specification (NDS) - latest edition
2. Individual timber framing members shall be visually graded, minimum grade #2 Spruce-Pine-Fir (SPF), kiln dried to 19% maximum moisture content.
3. Timber shall be southern yellow pine treated with ACQ water borne preservative in accordance with AWPA treatment C1 with 0.40 PCF retainage for items in contact with roofing, masonry or concrete with 0.60 PCF retainage for items in contact with earth.
4. Metal connectors shall be used at all timber to timber connections or as noted on the design drawings. All metal connectors in contact with pressure treated timber shall be hot-dipped galvanized.
5. Provide Simpson H2.5A hurricane anchors where timber framing and/or trusses bear on bearing walls and structural beams.
6. Nails and screws not specified shall conform with IBC 2009. All nails and screws in contact with pressure treated timber shall be stainless steel.
7. Provide ½" thick APA rated exterior wall sheathing fastened w/ 10d nails @ 4" o.c. at panel edges and 6" o.c. intermediate. Lap sheathing 1'-0" minimum over existing structure (Where applicable).
8. Provide ⅝" thick APA rated roof sheathing fastened w/ 10d nails @ 6" o.c. at panel edges and intermediate.
9. Provide ¾" thick APA rated floor sheathing fastened w/ construction adhesive and 10d ring shank nails @ 6" o.c. at panel edges and intermediate.
10. LVL indicated laminated veneer lumber beams manufactured by Boise Cascade or approved equal.

LINTEL SCHEDULE

MASONRY OPENING	LINTEL SIZE
UP TO 3'-0"	L3 1/2x3 1/2x5/16
3'-1"-4'-6"	L4x3 1/2x5/16 (4" LEG VERT.)
4'-7"-6'-0"	L5x3 1/2x5/16 (5" LEG VERT.)
6'-1"-8'-0"	L6x3 1/2x5/16 (6" LEG VERT.)

NOTES:

1. PROVIDE LINTELS OVER ALL OPENINGS EXCEPT WHERE LINTEL BLOCKS ARE PROVIDED.
2. PROVIDE ONE ANGLE FOR EACH 4" OF WALL THICKNESS. FOR 6" WALLS, PROVIDE WT OR BUILT-UP SECTION WITH PROPERTIES EQUAL TO OR GREATER THAN 1 1/2 TIMES THE ANGLE PROPERTIES FOR A 4" WALL THICKNESS.
3. PROVIDE 8" OF BEARING @ EACH END OF ALL LINTELS.
4. ALL EXTERIOR LINTELS SHALL BE HOT-DIPPED GALVANIZED.

THESE DRAWINGS HAVE BEEN DEVELOPED BY L&L STRUCTURAL ENGINEERING SERVICES, INC. FOR THE TITLED SET ONLY. THE DRAWINGS ARE THE SOLE PROPERTY OF L&L ENGINEERING SERVICES, INC. AND THEY SHALL NOT BE USED, LENT, COPIED OR ALTERED WITHOUT THE WRITTEN CONSENT OF L&L STRUCTURAL ENGINEERING SERVICES, INC.

L & L STRUCTURAL
ENGINEERING SERVICES, INC.
SIX Q STREET
SOUTH PORTLAND, MAINE 04106
PHONE: (207) 767-4830
FAX: (207) 799-5432
EMAIL: JLEASURE@L-L-ENG.COM

STATE OF MAINE
JOSEPH H. LEASURE
No. 6242
LICENSED
PROFESSIONAL ENGINEER

rev.	date	description	appr'd
A	08/10/15	FOR COORDINATION ONLY	JHL
0	08/12/15	FOR CONSTRUCTION	JHL

designed by: RJW
drawn by: RJW
checked by: JHL
scale: AS NOTED
date: 08/10/2015
plot date: 08/12/2015
project #: 2015-092

MAINE TURNPIKE AUTHORITY
MILE MARKER 53.0
FALMOUTH, ME
ADMINISTRATION BUILDING
GENERAL NOTES AND LINTEL SCHEDULE

S1

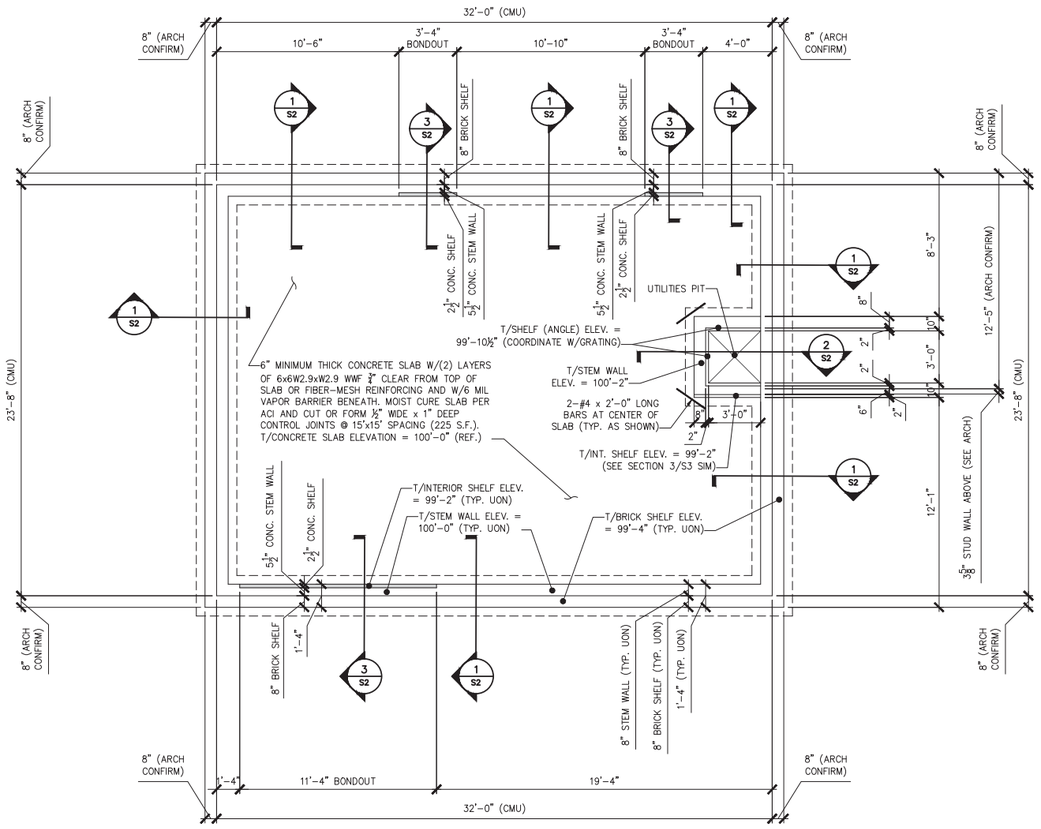

FOUNDATION PLAN

1/4" = 1'-0"

NOTES:

1. SEE GENERAL NOTES ON DWG S1.
2. "E" INDICATES: EXISTING CONDITIONS, OR MEMBERS.
3. "TYP." INDICATES: TYPICAL (ALSO SEE GENERAL NOTE #5).
4. "V.I.F." INDICATES: G.C. SHALL "VERIFY IN FIELD" EXISTING DIMENSIONS, ELEVATIONS, OR CONDITIONS INDICATED AND REPORT ANY DISCREPANCIES TO THE ENGINEER.
5. "U.O.N." INDICATES: UNLESS OTHERWISE NOTED.
6. "S.S." INDICATES: STAINLESS STEEL.
7. "M.O." INDICATES: MASONRY OPENING.
8. "HDG" INDICATES: HOT DIPPED GALVANIZED

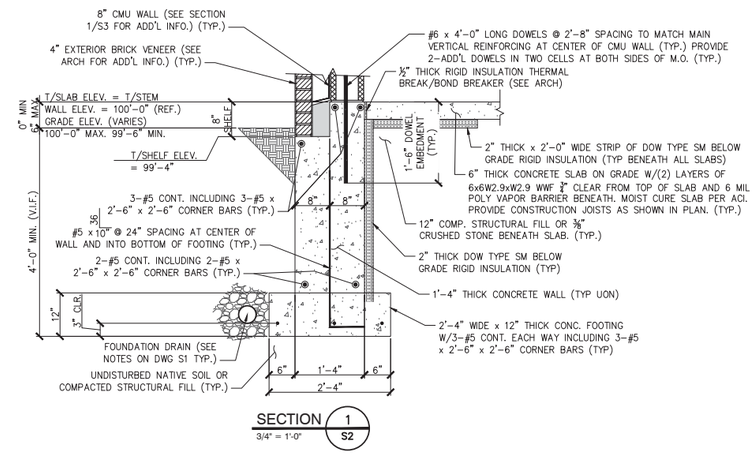

SECTION 1/S2

3/4" = 1'-0"

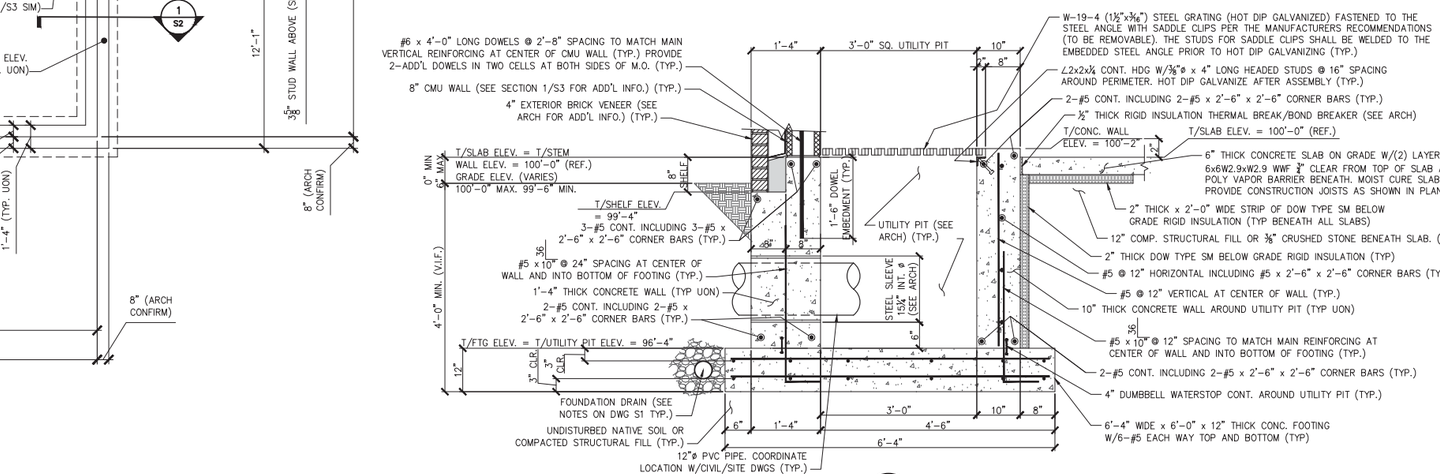

SECTION 2/S2

3/4" = 1'-0"

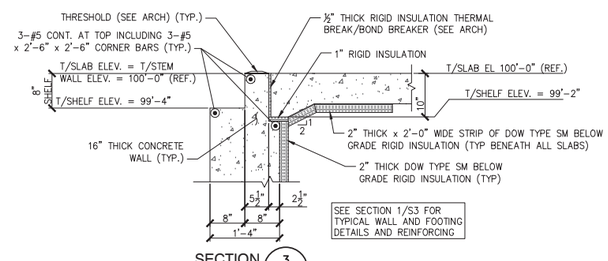

SECTION 3/S2

3/4" = 1'-0"

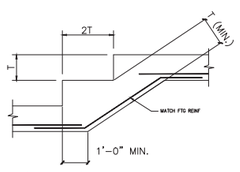

NOTE: T = FOOTING THICKNESS

TYP. STEP FOOTING DETAIL

N.T.S.

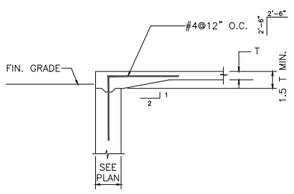

TYP. DETAIL @ DOOR OPNG.

N.T.S.

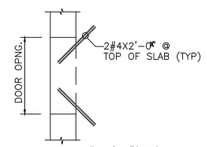

NOTE: PROVIDE 2#4X4'-0"(TOP) IN SLAB AT INSIDE CORNERS.

TYP. SLAB CORNER DETAIL @ DOOR

N.T.S.

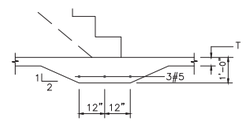

NOTE: EXTEND MIN 12" EACH SIDE OF STAIR STRINGER SEE ARCH DWGS FOR STAIR LOCATION.

THICKENED SLAB AT STAIR DETAIL

N.T.S.

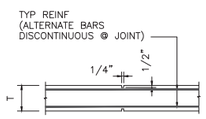

TYP CONTROL JOINT IN WALL

N.T.S.

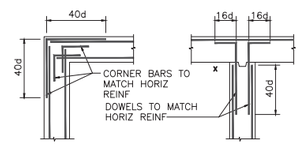

TYP WALL REINF DETAILS (U.O.N.)

N.T.S.

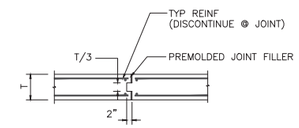

TYP EXPANSION JOINT IN WALL

N.T.S.

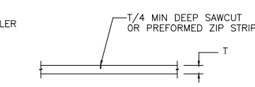

TYP. CONTROL JOINT DETAIL (CJ)

N.T.S.

THESE DRAWINGS HAVE BEEN DEVELOPED BY L&L STRUCTURAL ENGINEERING SERVICES, INC. FOR THE TITLED SET ONLY. THE DRAWINGS ARE THE SOLE PROPERTY OF L&L ENGINEERING SERVICES, INC. AND THEY SHALL NOT BE USED, LENT, COPIED OR ALTERED WITHOUT THE WRITTEN CONSENT OF L&L STRUCTURAL ENGINEERING SERVICES, INC.

L & L STRUCTURAL
ENGINEERING SERVICES, INC.
SIX Q STREET
SOUTH PORTLAND, MAINE 04106
PHONE: (207) 767-4830
FAX: (207) 799-5432
EMAIL: JLEASURE@LL-ENG.COM

STATE OF MAINE JOSEPH H. LEASURE No. 8242 LICENSED PROFESSIONAL ENGINEER

rev.	date	description	appr'd
A	08/10/15	FOR COORDINATION ONLY	JHL
0	08/12/15	FOR CONSTRUCTION	JHL

designed by: RJW
drawn by: RJW
checked by: JHL
scale: AS NOTED
date: 08/10/2015
plot date: 08/12/2015
project #: 2015-092

MAINE TURNPIKE AUTHORITY

MILE MARKER 53.0
FALMOUTH, ME

ADMINISTRATION BUILDING
FOUNDATION PLAN, SECTIONS, AND DETAILS

S2

ROOF TRUSS LOADING
TCLL: = 45 P.S.F.
TCDL: = 10 P.S.F.
BCLL: = 0 P.S.F.
BCDL: = 10 P.S.F.

NOTES:
1. MAXIMUM PERMISSIBLE LIVE LOAD DEFLECTION SHALL BE L/360.
2. TRUSS DESIGNER SHALL DESIGN TRUSSES FOR APPLICABLE LIVE, DEAD AND LATERAL LOADS IN ACCORDANCE WITH THE 2009 IBC INTERNATIONAL BUILDING CODE INCLUDING WIND, SNOW, UNBALANCED SNOW AND DEAD LOADS (TYP).
3. PROVIDE TEMPORARY AND PERMANENT TRUSS BRACING AS REQUIRED BY MANUFACTURER (SEE TRUSS SHOP DWGS) AND IN ACCORDANCE WITH THE HIB-LATEST EDITION PUBLISHED BY THE TRUSS PLATE INSTITUTE (TYP.)

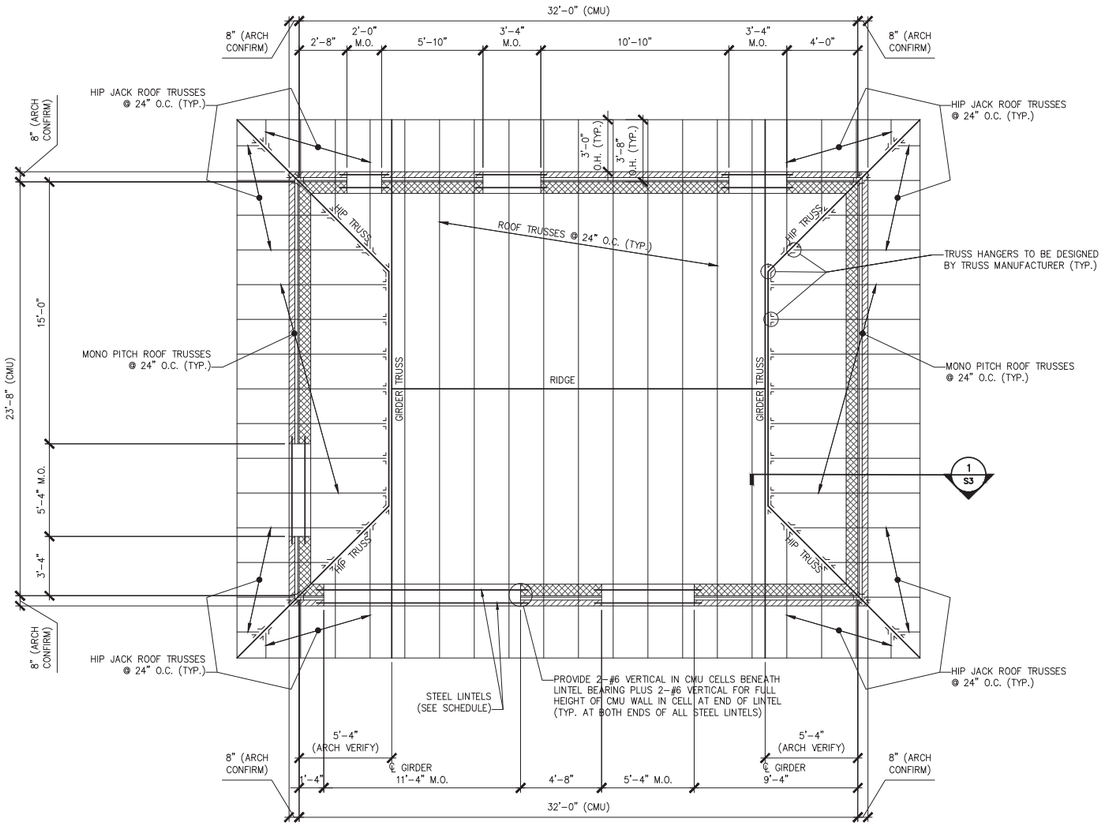

ROOF FRAMING PLAN
1/4" = 1'-0"

NOTES:
1. SEE GENERAL NOTES ON DWG S1.
2. "E" INDICATES: EXISTING CONDITIONS, OR MEMBERS.
3. "TYP." INDICATES: TYPICAL (ALSO SEE GENERAL NOTE #5).
4. "V.I.F." INDICATES: G.C. SHALL "VERIFY IN FIELD" EXISTING DIMENSIONS, ELEVATIONS, OR CONDITIONS INDICATED AND REPORT ANY DISCREPANCIES TO THE ENGINEER.
5. "U.O.N." INDICATES: UNLESS OTHERWISE NOTED.
6. "S.S." INDICATES: STAINLESS STEEL.
7. "M.O." INDICATES: MASONRY OPENING.

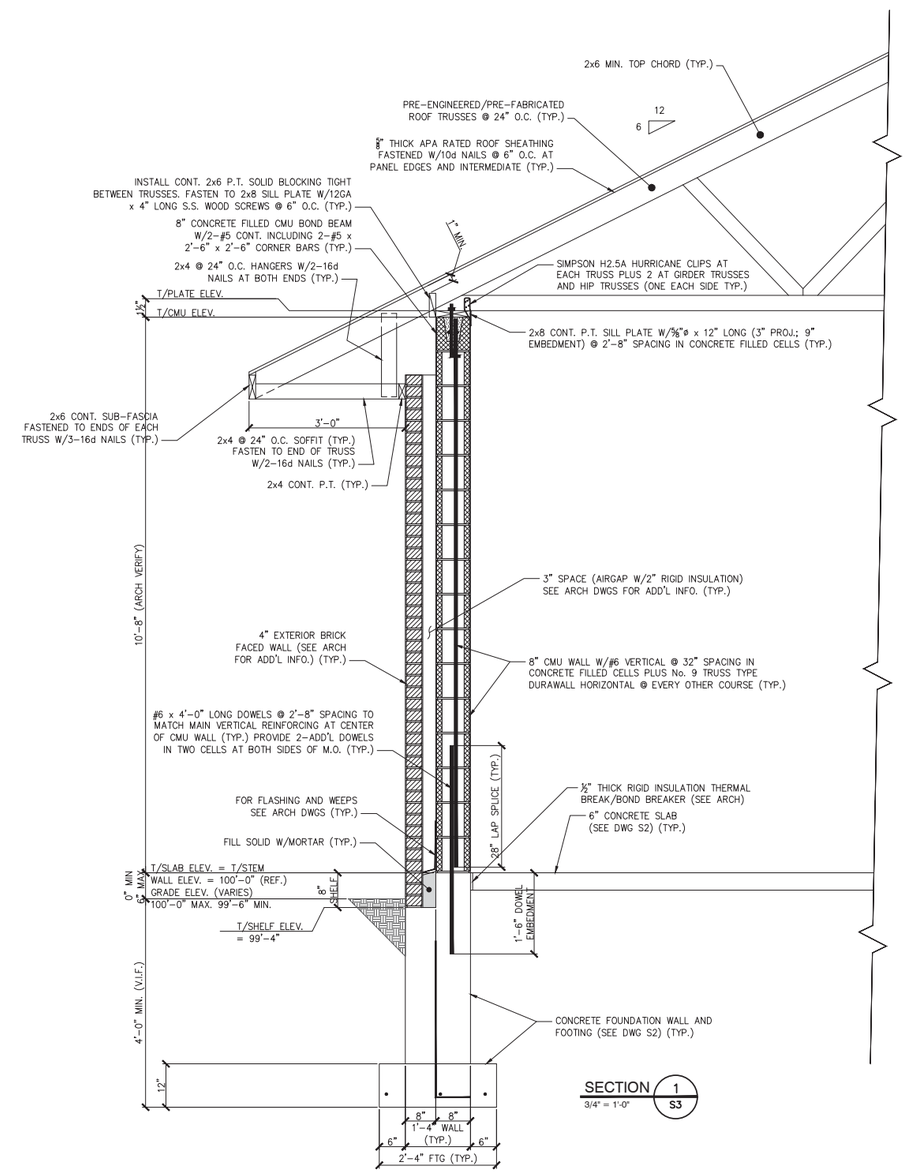

SECTION 1/S3
3/4" = 1'-0"

THESE DRAWINGS HAVE BEEN DEVELOPED BY L&L STRUCTURAL ENGINEERING SERVICES, INC. FOR THE TITLED SET ONLY. THE DRAWINGS ARE THE SOLE PROPERTY OF L&L ENGINEERING SERVICES, INC. AND THEY SHALL NOT BE USED, LENT, COPIED OR ALTERED WITHOUT THE WRITTEN CONSENT OF L&L STRUCTURAL ENGINEERING SERVICES, INC.

L & L STRUCTURAL
ENGINEERING SERVICES, INC.
SIX Q STREET
SOUTH PORTLAND, MAINE 04106
PHONE: (207) 767-4830
FAX: (207) 799-5432
EMAIL: JLEASURE@LL-ENG.COM

STATE OF MAINE JOSEPH H. LEASURE No. 6242 LICENSED PROFESSIONAL ENGINEER

rev.	date	description	appr'd
A	08/10/15	FOR COORDINATION ONLY	JHL
0	08/12/15	FOR CONSTRUCTION	JHL

designed by: RJW
drawn by: RJW
checked by: JHL
scale: AS NOTED
date: 08/10/2015
plot date: 08/12/2015
project # 2015-092

MAINE TURNPIKE AUTHORITY
MILE MARKER 53.0
FALMOUTH, ME

ADMINISTRATION BUILDING
ROOF FRAMING PLAN, SECTIONS, AND DETAILS

S3

ABBREVIATIONS

&	AND
∠	ANGLE
@	AT
‹	CENTER LINE
~	DIAMETER OR ROUND
#	POUND OR NUMBER
ACOUS	ACOUSTICAL
A.C.T.	ACOUSTICAL CEILING TILE
A.F.F.	ABOVE FINISHED FLOOR
ALUM	ALUMINUM
APPROX	APPROXIMATE
ARCH	ARCHITECTURAL
BD	BOARD
BLDG	BUILDING
BLKG	BLOCKING
C.J.	CONTROL JOINT
CLG	CEILING
CLO	CLOSET
CLR	CLEAR
CMU	CONCRETE MASONRY UNIT
CO	CASED OPENING
CONC	CONCRETE
CONSTR	CONSTRUCTION
CONT.	CONTINUOUS
CONTR	CONTRACTOR
CT	CERAMIC TILE
CU. FT.	CUBIC FEET
DET	DETAIL
D.F.	DRINKING FOUNTAIN
DIA	DIAMETER
DIM	DIMENSION
DISP	DISPENSER
DN	DOWN
DS	DOWNSPOUT
DWG	DRAWING
EA	EACH
EXP. JT.	EXPANSION JOINT
ELEC	ELECTRICAL
ELEV	ELEVATION
EQ	EQUAL
EQPT	EQUIPMENT
EXIST.	EXISTING
EXP.	EXPANSION
EXT	EXTERIOR
FD	FLOOR DRAIN
FE	FIRE EXTINGUISHER
FIN. FL.	FINISH FLOOR
GA	GAUGE
GALV	GALVANIZED
GYP BD	GYPSUM BOARD
HGT	HEIGHT
HM	HOLLOW METAL
HP	HANDICAPPED
ID	INSIDE DIMENSION
INSUL	INSULATION, INSULATED
INT	INTERIOR
JT	JOINT
LAM	LAMINATE(D)
LAV	LAVATORY
MAX	MAXIMUM
MECH	MECHANICAL
MEMB	MEMBER
MTL	METAL
MFR	MANUFACTURER
MIN.	MINIMUM
MISC.	MISCELLANEOUS
MO	MASONRY OPENING
NIC	NOT IN CONTRACT
NTS	NOT TO SCALE
O.C.	ON CENTER
OD	OUTSIDE DIAMETER
OPG	OPENING
OPP	OPPOSITE
OVHD	OVERHEAD
P.LAM	PLASTIC LAMINATE
PL	PLATE
PLYWD	PLYWOOD
PTD	PAINTED
R	RISER
RAD	RADIUS
REINF	REINFORCED
REQ'D	REQUIRED
SAF.	SAFETY
SH	SHELF
SHT(S)	SHEET (SHEETS)
SIM	SIMILAR
SPEC	SPECIFICATION
SST	STAINLESS STEEL
ST	STORAGE
STD	STANDARD
STL	STEEL
STRUCT.	STRUCTURAL
SUSP	SUSPENDED
TH	THICK
TOC	TOP OF CURB
TOS	TOP OF SLAB
TR	TREAD
TS	TUBE SHAPE
TYP	TYPICAL
VCT	VINYL COMPOSITION TILE
W/	WITH
WC	WATER CLOSET
WD	WOOD

MAINE STATE PLUMBING CODE/UPC

Occupancy Classification:	Business Office
Occupancy Area:	735 sf Net
Occupancy Load:	8

Office: 8 Occupants (4 Male/4 Female)

FIXTURES	TOILETS	URINALS	LAVS
Unisex Toilet Room (Less than 10 Occupants)	1	0	1

Drinking Fountain: 1 Required per 150 occupants - Beverage Station

NFPA 101 LIFE SAFETY CODE - 2012 EDITION

Building Classification:	Business - (832 sf)
Construction Type:	V/000
Hazard Classification:	Ordinary Hazard
Occupant Loads:	Office @ 100 sf/occupant = 9 Occupants
Janitor, Mech, Stor Rating:	1 hour if over 100 sf
Minimum Headroom:	7'-6" at occupied areas
Building Uses	Business

(xx' denotes sprinkled condition)

Max. Allowable Travel Distance:	150' (250')
Max. Allowable Common Path:	75' (100')
Max. Dead End Corridor Length:	20' (50')
Minimum Egress Corridor Width:	44" if over 50 occupants; 36" otherwise
Minimum Number of Required Exits	2 (1 if exit distance is less than 75')
Minimum Exit Access Corridor rating:	1 hr (none)
Separation of exits:	0.5 diagonal distance = 19'
Minimum Egress Door Width:	36"
Exit Lighting:	Required
Emergency Lighting:	Not Required
Fire Alarm System:	Not Required
Fire Sprinkler System:	Not Required
Portable Fire Extinguishers:	Required

2009 INTERNATIONAL BUILDING CODE

Use Group Classification:	Business - 832 sf
Occupant Loads:	100 sf/occupant @ business = 9 occupants
Area Use Separation Ratings:	1 hour @ demising partitions
Janitor, Mech & Storage Rooms:	1 hour if over 50 sf but under 100 sf
Building Limitations	
Construction Type:	5B
Maximum Height:	2 Story (+10'/1story)
Maximum Area / Floor:	9,000 sf (27,000 sf)
Fire Resistance Ratings	
Structural Frame	None
Load Bearing Exterior Walls:	None
Load Bearing Interior Walls:	None
Mechanical Rooms:	1 hour (none)
Exit Corridors:	1 hour (none if sprinkled)
Roof/Floor Structure	None
Minimum Number of Exits:	2
Maximum Exit Travel Distance:	200' (250')
Maximum Dead End Corridor Length:	20'
Maximum Common Travel Path:	75'
Minimum Corridor Width:	44" (36" if under 50 occupants)
Fire Alarm/Detection System:	Not Required
Fire Sprinkler System:	Not Required
Portable Fire Extinguishers:	Required
Exit Lights	Required
Emergency Lighting	Required
Building Live Loads	
Offices:	100 psf
Corridors:	80 psf

2009 INTERNATIONAL ENERGY EFFICIENCY CODE (IECC)

MUBEC (Maine Uniform Building Energy Code)

MINIMUM INSULATION VALUES
Per 2009 IECC; Table 502.1.2, 502.2(1) and 502.3

ZONE 6A	R-VALUE	U-FACTOR	SHGC
Exterior wall	13 + 7.5 ci	0.064	NA
Roof	30.0	0.033	NA
Slab (24" band)	10.0	0.100	NA
Frost Wall (ci)	10.0	0.100	NA
Doors - Opaque	1.4	0.70	NA
Windows	1.8	0.55	0.40
Storefront (window)	2.2	0.45	0.40
Storefront (door)	1.25	0.80	0.40

MATERIALS

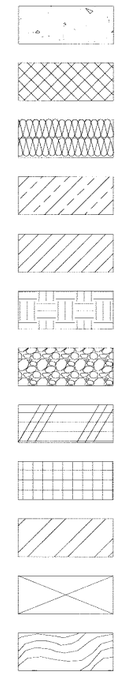

SYMBOLS

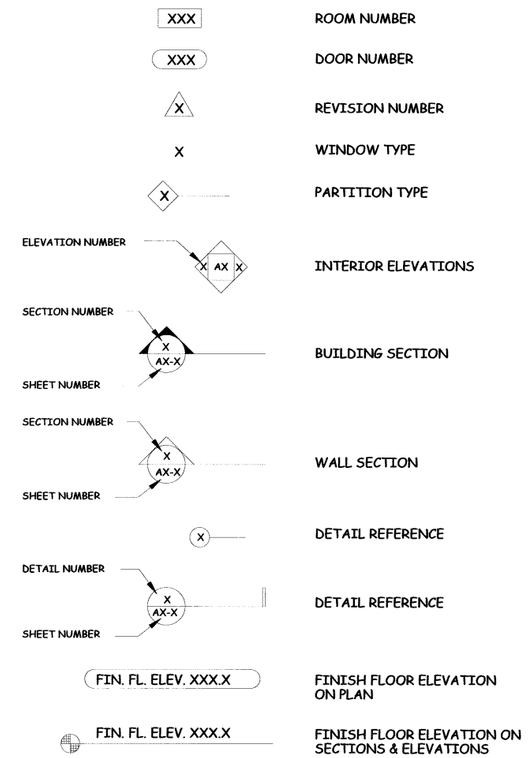

GENERAL NOTES:

1. ALL WORK SHALL CONFORM TO LOCAL AND STATE LAWS, ORDINANCES AND PREVAILING EDITIONS OF ADOPTED BUILDING CODES. IT IS THE CONTRACTOR'S RESPONSIBILITY TO SECURE ALL PERMITS FOR THE WORK.
2. THE CONTRACTOR SHALL VERIFY ALL CONDITIONS AND DIMENSIONS PRIOR TO COMMENCING THE WORK AND REPORT ANY DISCREPANCIES TO THE ARCHITECT. CONTRACTOR SHALL PROCEED WITH THE WORK ONLY AFTER SUCH DISCREPANCIES HAVE BEEN RESOLVED BY THE ARCHITECT. CONTRACTOR SHALL ALLOW A 48 HOUR TIME FRAME FOR RESOLVING DISCREPANCIES ONCE THE ARCHITECT HAS ACKNOWLEDGED THE CONDITION.
3. CONTRACTOR SHALL REVIEW AND VERIFY ALL EXISTING CONDITIONS PRIOR TO STARTING THE WORK IN ANY GIVEN AREA.
4. WORK WITH GIVEN DIMENSIONS AND LARGE SCALE DETAILS. DO NOT SCALE THE DRAWINGS AS THE REPRODUCTIVE PROCESS TENDS TO DISTORT THE ACCURACY OF THE GRAPHIC SCALE INDICATED.
5. ALL WOOD IN CONTACT WITH MASONRY OR CONCRETE SHALL BE PRESSURE PRESERVATING TREATED.
6. INSTALL SOLID BLOCKING AT WALL FRAMING BEHIND ALL SURFACE MOUNTED FIXTURES, TRIM AND HANDRAILS.
7. ALL GRAB BARS SHALL BE ABLE TO SUPPORT A DEAD WEIGHT OF 250 LBS AT ANY POINT.
8. THE LOCATION OF ANY DOOR JAMBS NOT DIMENSIONED SHALL BE 6" FROM ADJACENT PERPENDICULAR WALL.
9. ALL WALL PARTITIONS SHALL EXTEND FLOOR TO STRUCTURE ABOVE, UNLESS OTHERWISE NOTED.
10. ALL NEW SHEETROCK IN WET AREAS (PLUMBING FIXTURES) SHALL BE MOISTURE RESISANT TYPE, UNLESS OTHERWISE NOTED.
11. REFER TO ACCESSIBILITY DETAIL SHEET FOR AMERICANS WITH DISABILITIES ACT (ADA) CONSTRUCTION CRITERIA.

GRANT HAYS ASSOCIATES
ARCHITECTURE & INTERIOR DESIGN
P.O. BOX 6179 FALMOUTH MAINE 04105
207.871.5900 www.granthays.com

SEAL

REVISIONS

PROJECT NAME

MAINE TURNPIKE TOLL ADMINISTRATION BUILDING
MILE MAKER (MM) 53.0
WEST FALMOUTH MAINE 04105

SHEET

ABREVIATIONS LEGENDS & SYMBOLS

DATE
14 AUGUST 2015

SCALE
1/4" = 1'-0"

DRAWN
SAM/MFH

JOB NO.
150408

SHEET
A1

COPYRIGHT
REPRODUCTION OR REUSE OF THIS DOCUMENT WITHOUT WRITTEN PERMISSION FROM GRANT HAYS ASSOCIATES IS PROHIBITED.

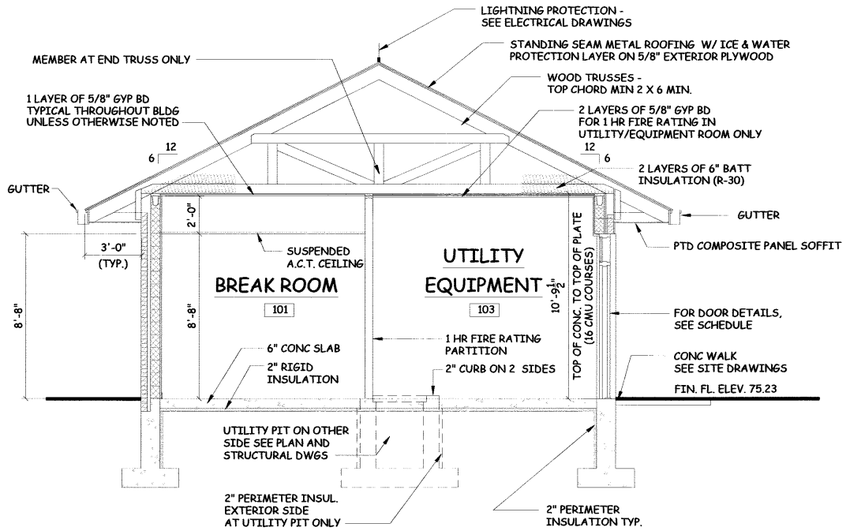

TYPICAL BUILDING SECTION A-A 1/4" = 1'-0"

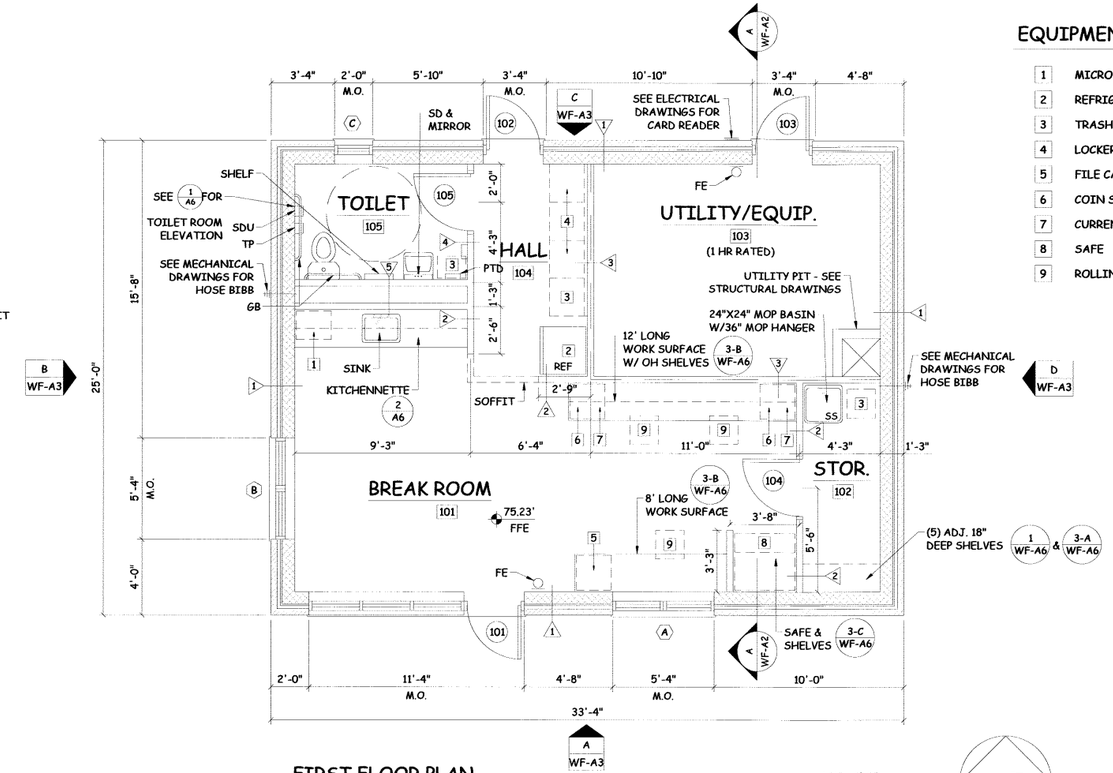

FIRST FLOOR PLAN 1/4" = 1'-0"

EQUIPMENT TYPES:

1	MICROWAVE OVEN
2	REFRIGERATOR
3	TRASH BIN
4	LOCKERS - 2 TIER
5	FILE CABINET - 2 DRAWER
6	COIN SORTER
7	CURRENCY SCANNER
8	SAFE
9	ROLLING CHAIR

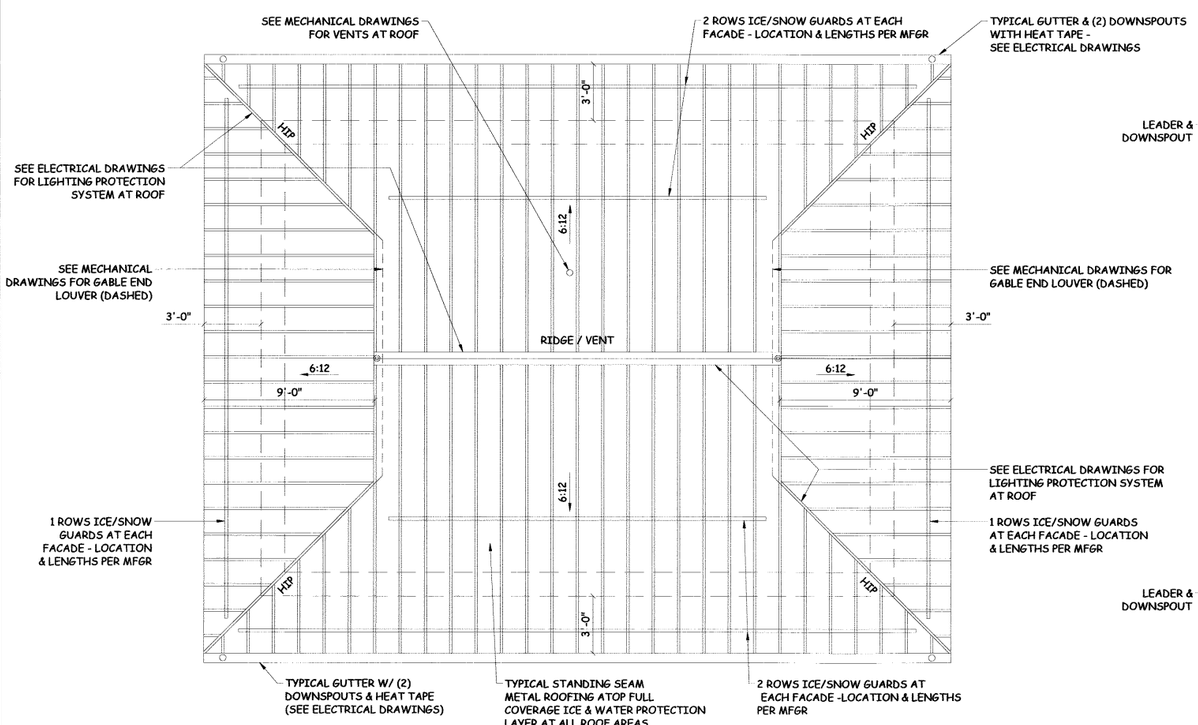

ROOF PLAN 1/4" = 1'-0"

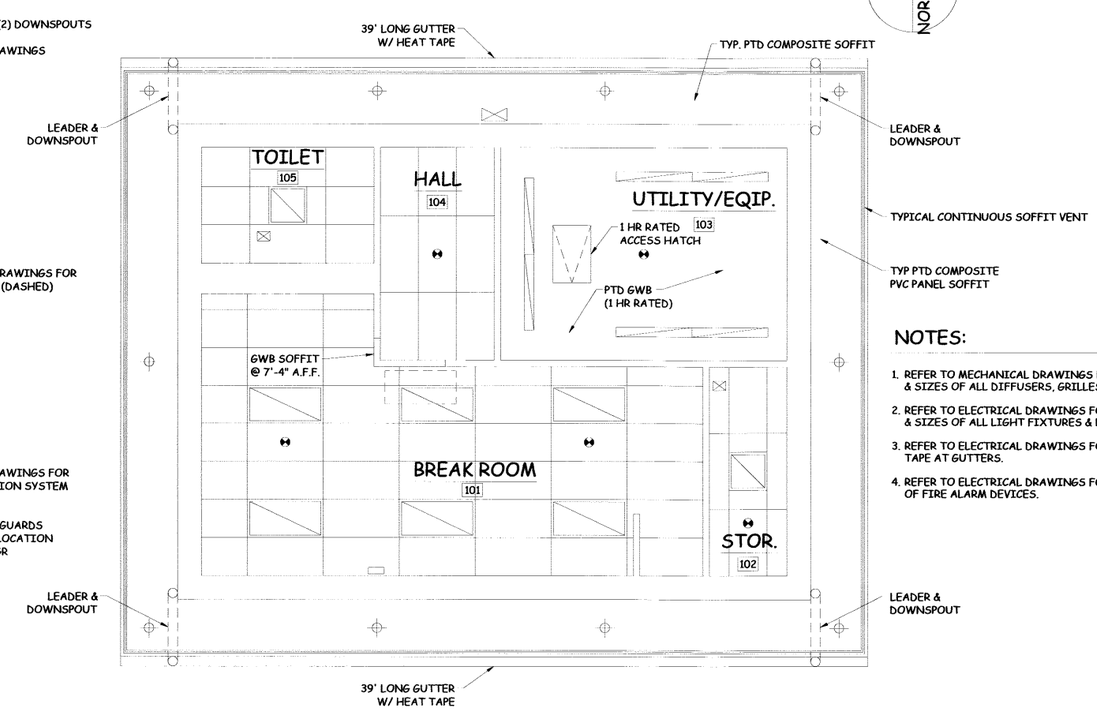

REFLECTED CEILING PLAN 1/4" = 1'-0"

NORTH

NOTES:

1. REFER TO MECHANICAL DRAWINGS FOR LOCATIONS & SIZES OF ALL DIFFUSERS, GRILLES, & EQUIPMENT.
2. REFER TO ELECTRICAL DRAWINGS FOR LOCATIONS & SIZES OF ALL LIGHT FIXTURES & DEVICES.
3. REFER TO ELECTRICAL DRAWINGS FOR HEAT TAPE AT GUTTERS.
4. REFER TO ELECTRICAL DRAWINGS FOR LOCATIONS OF FIRE ALARM DEVICES.

GRANT HAYS ASSOCIATES
ARCHITECTURE & INTERIOR DESIGN
P.O. BOX 6179 FALMOUTH MAINE 04105
207.871.5900 www.granthays.com

SEAL
LICENSED ARCHITECT MICHAEL F. HAYS No. 1724 STATE OF MAINE

REVISIONS

PROJECT NAME
MAINE TURNPIKE TOLL ADMINISTRATION BUILDING MILE MAKER (MM) 53.0
WEST FALMOUTH MAINE 04105

SHEET
FLOOR PLAN, ROOF PLAN, REFLECTED CEILING PLAN & BUILDING SECTION

DATE
14 AUGUST 2015

SCALE
1/4" = 1'-0"

DRAWN
SAM/MFH

JOB NO.
150408

SHEET
A2

COPYRIGHT
REPRODUCTION OR REUSE OF THIS DOCUMENT WITHOUT WRITTEN PERMISSION FROM GRANT HAYS ASSOCIATES IS PROHIBITED.

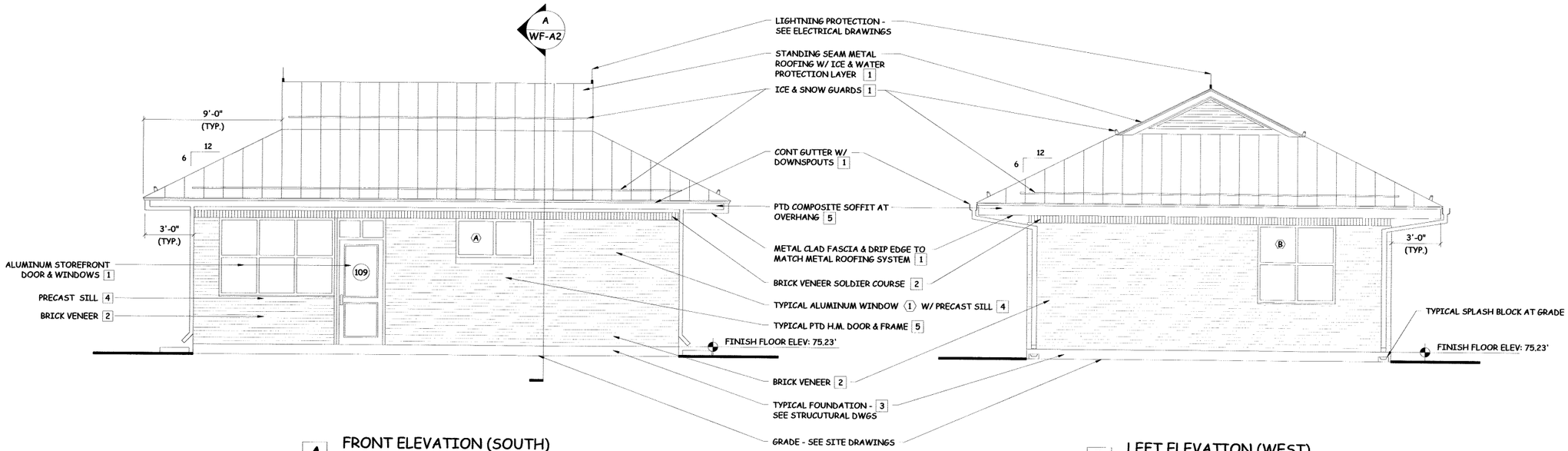

A FRONT ELEVATION (SOUTH)

B LEFT ELEVATION (WEST)

EXTERIOR MATERIALS COLOR LEGEND	
1 GREEN KYNAR	5 GREEN PAINT
2 BRICK RED - NATURAL	
3 CONCRETE - NATURAL	
4 WARM GRAY	

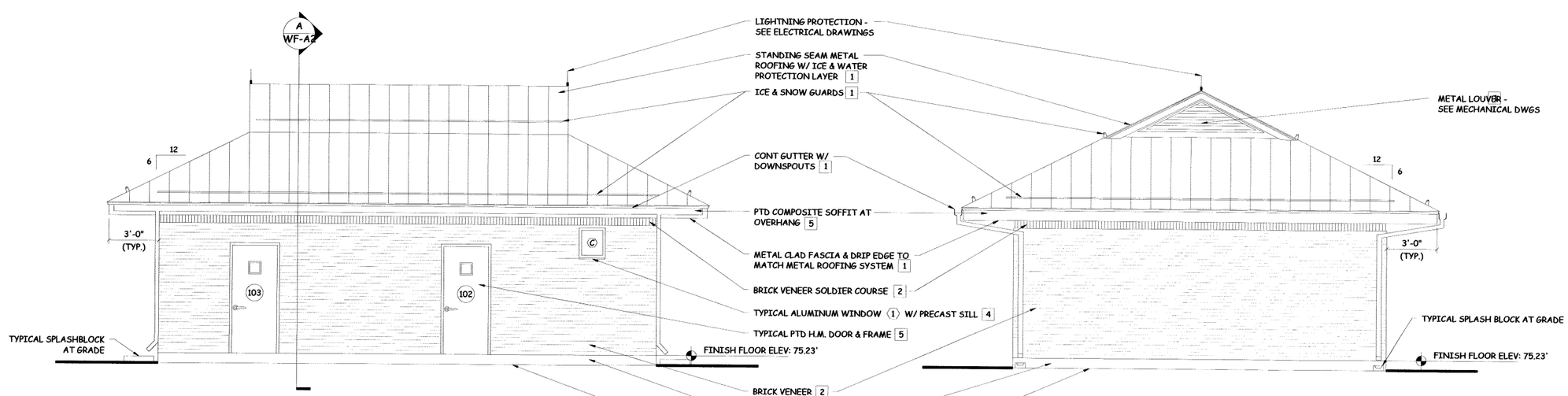

C REAR ELEVATION (NORTH)

D RIGHT ELEVATION (EAST)

GRANT HAYS ASSOCIATES
ARCHITECTURE & INTERIOR DESIGN
P.O. BOX 6179 FALMOUTH MAINE 04105
207.871.5900 www.granthays.com

SEAL

LICENSED ARCHITECT
MICHAEL F. HAYS
No. 1724
STATE OF MAINE

REVISIONS

PROJECT NAME

MAINE TURNPIKE TOLL ADMINISTRATION BUILDING
MILE MAKER (MM) 53.0
WEST FALMOUTH
MAINE 04105

SHEET

EXTERIOR ELEVATIONS

DATE
14 AUGUST 2015

SCALE
1/4" = 1'-0"

DRAWN
SAM/MFH

JOB NO.
150408

SHEET
A3

COPYRIGHT
REPRODUCTION OR REUSE OF THIS DOCUMENT WITHOUT WRITTEN PERMISSION FROM GRANT HAYS ASSOCIATES IS PROHIBITED.

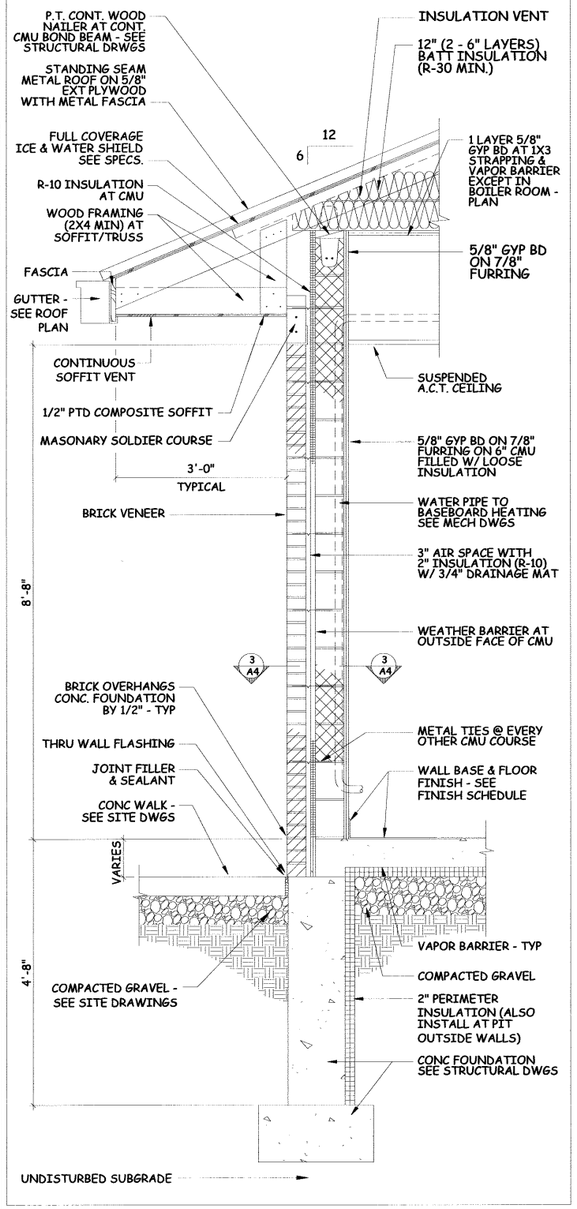

1 TYPICAL EXTERIOR WALL SECTION 3/4"=1'-0"

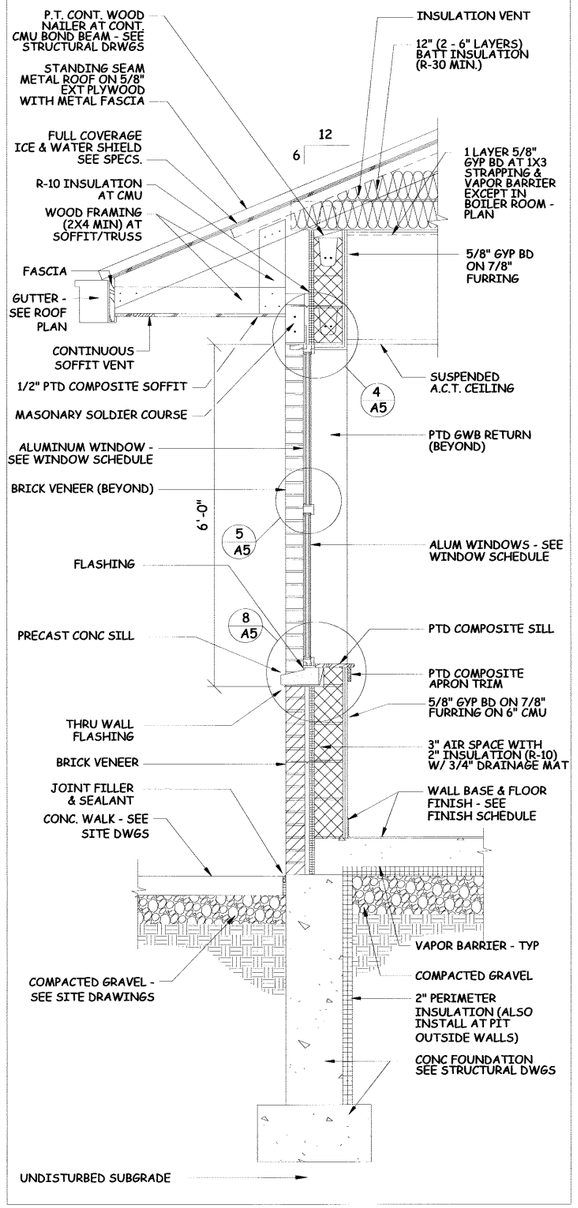

2 EXTERIOR WINDOW WALL SECTION 3/4"=1'-0"

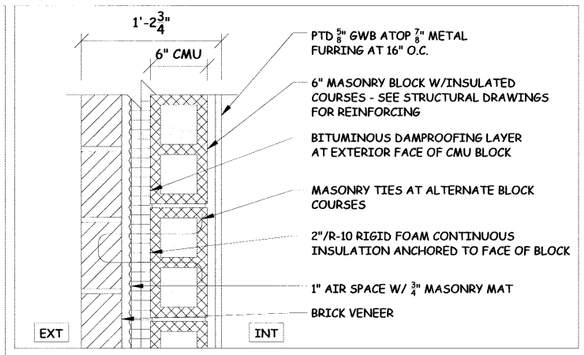

3 EXTERIOR WALL TYPE 1 3"=1'-0"

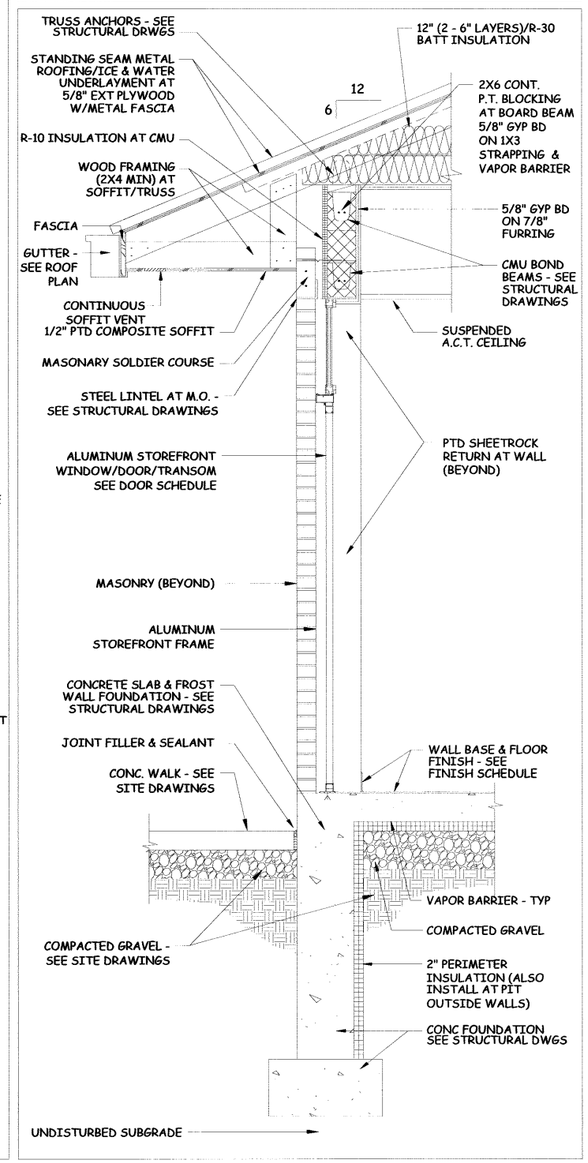

4 EXTERIOR DOOR WALL SECTION 3/4"=1'-0"

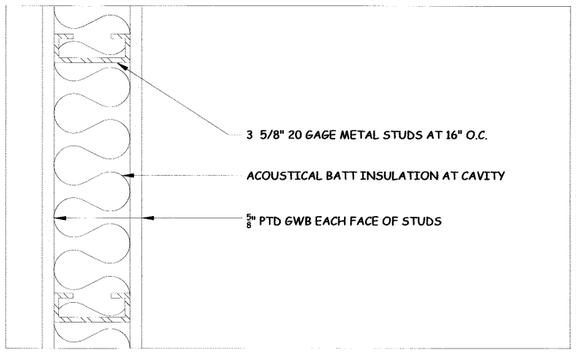

5 INTERIOR PARTITION TYPE 2 3"=1'-0"

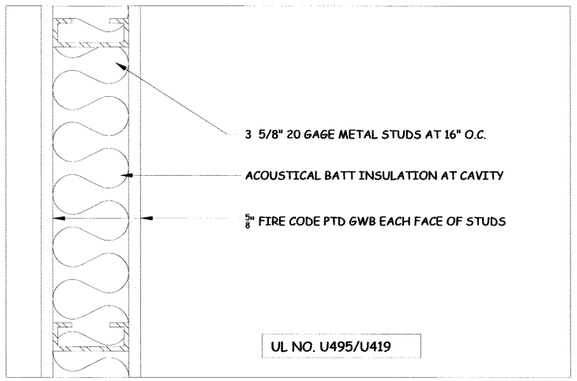

6 1 HOUR RATED PARTITION TYPE 3 3"=1'-0"

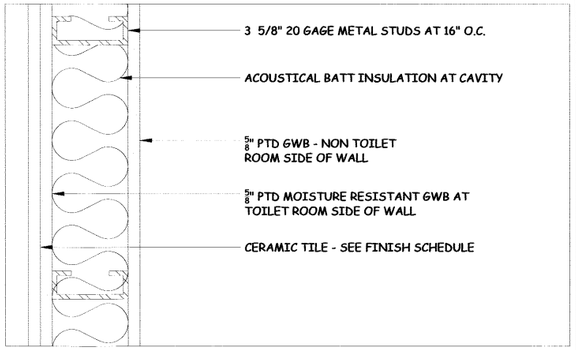

7 WATER RESISTANT PARTITION TYPE 4 3"=1'-0"

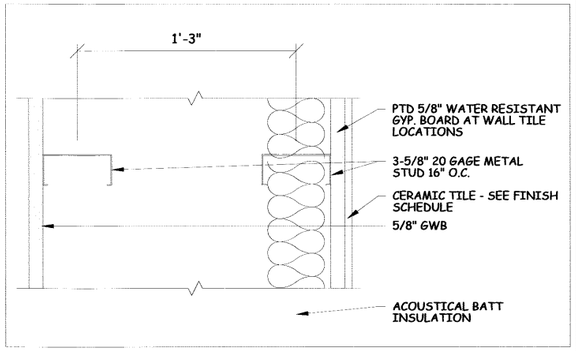

8 PLUMBING CHASE TYPE 5 3"=1'-0"

GRANT HAYS ASSOCIATES
ARCHITECTURE & INTERIOR DESIGN
P.O. BOX 6179 FALMOUTH MAINE 04105
207.871.5900 www.granthays.com

SEAL

LICENSED ARCHITECT MICHAEL F. HAYS No. 1724 STATE OF MAINE

REVISIONS

PROJECT NAME

MAINE TURNPIKE TOLL ADMINISTRATION BUILDING MILE MAKER (MM) 53.0

WEST FALMOUTH MAINE 04105

SHEET

WALL SECTIONS & PARTITION TYPES

DATE 14 AUGUST 15

SCALE AS NOTED

DRAWN SAM/MFH

JOB NO. 150408

SHEET A4

COPYRIGHT
REPRODUCTION OR REUSE OF THIS DOCUMENT WITHOUT WRITTEN PERMISSION FROM GRANT HAYS ASSOCIATES IS PROHIBITED.

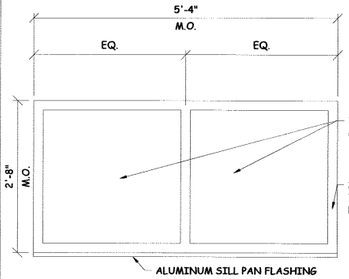

(A) FIXED THERMAL BREAK ALUMINUM STOREFRONT WINDOW

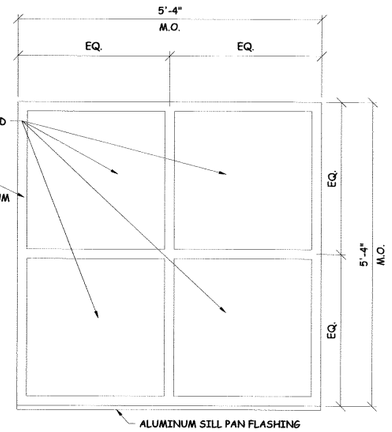

(B) FIXED THERMAL BREAK ALUMINUM STOREFRONT WINDOW

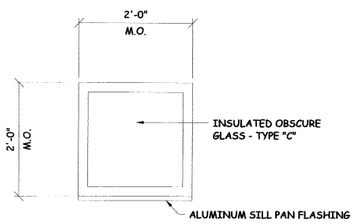

(C) FIXED THERMAL BREAK ALUMINUM STOREFRONT WINDOW

WINDOW TYPES NO SCALE

(1) **** ****

(2) **** ****

(3) **** ****

(4) **** ****

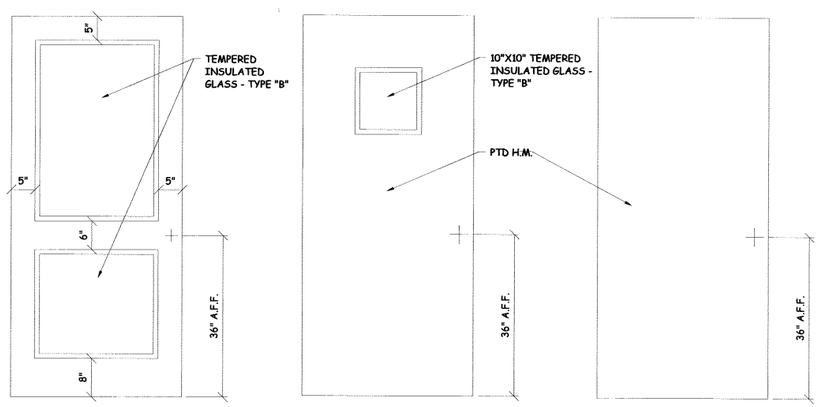

(A) EXTERIOR ALUMINUM WIDE STYLE FULL LITE DOOR

(B) EXTERIOR FINISH PTD INSULATED H.M. DOOR W/ LITE

(C) INTERIOR FLUSH PTD H.M. DOOR

DOOR TYPES NO SCALE

DOOR SCHEDULE

ABBREVIATIONS

AL	ALUMINUM	T	TEMPERED
E	EXISTING	TH	THERMAL INSULATED
EMHO	ELECTRO MAGNETIC HOLD OPENER	V	VINYL
GL	GLASS	W	WIRE
HM	HOLLOW METAL	WD	WOOD
INSUL	INSULATED	W/	WITH
SS	STAINLESS STEEL		

DOORS										FRAMES					THRESHHOLDS		
NO.	TYPE	SIZE (w x h)	THK	INSUL	HDWE	FR	GLASS TYPE	GLASS SIZE	REMARKS	TYPE	FR	PROFILE	DETAILS HEAD	DETAILS JAMB	MATERIAL	DETAILS SILL	DETAILS FIN
101	A	3070	1 3/4"	NO	HW-1	NO	INSUL/TEMP	FULL		A	NO	T-BREAK			ALUM		-
102	B	3070	1 3/4"	YES	HW-2	NO	INSUL/TEMP	10X10		B	NO	MAS			ALUM		-
103	B	3070	1 3/4"	YES	HW-3	NO	INSUL/TEMP	10X10		B	NO	MAS			ALUM		-
104	C	3070	1 3/4"	NO	HW-4	NO	NONE	NONE		C	NO	DW			NONE	-	
105	C	3070	1 3/4"	NO	HW-5	NO	NONE	NONE		C	NO	DW			NONE	-	

WINDOW SCHEDULE

ABBREVIATIONS

AL	ALUMINUM	T	TEMPERED
E	EXISTING	TH	THERMAL INSULATED
EMHO	ELECTRO MAGNETIC HOLD OPENER	V	VINYL
GL	GLASS	W	WIRE
HM	HOLLOW METAL	WD	WOOD
SS	STAINLESS STEEL	W/	WITH

NO.	TYPE	MANUFACTURER MATERIAL	MANUFACTURER MODEL	NOMINAL SIZE WIDTH	NOMINAL SIZE HEIGHT	DETAILS HEAD	DETAILS JAMB	DETAILS SILL	DETAILS MUNT	DETAILS MULL	REMARKS
A	FIXED	ALUMINUM	T- BREAK	5'-4"	2'-8"						TYPE "A" GLASS
B	FIXED	ALUMINUM	T- BREAK	5'-4"	5'-4"						TYPE "A" GLASS
C	FIXED	ALUMINUM	T- BREAK	2'-0"	2'-0"						TYPE "C" GLASS

FINISH SCHEDULE

ABBREVIATIONS

C	CARPET	FRP	FIBERGLASS REINFORCED PANELS	QT	QUARRY TILE
CH	CONCRETE W/ HARDENER	FV	FIELD VERIFY	ss	stainless steel
CMU	CONCRETE MASONRY UNIT	GL	GLASS	VSB	VINYL STRAIGHT BASE
CT	CERAMIC TILE	GWB	GYPSUM WALL BOARD	VCT	VINYL COMPOSITION TILE
E	EXISTING	P	PAINT	VWC	VINYL WALL COVERING
EP	EPOXY PAINT	PCS	PAINT COAT SYSTEM	WC(T)	WALL COVERING (TYPE)
FCS	FLOOR COATINGS SYSTEM	RCB	RUBBER COVE BASE	WD	WOOD

NO.	NAME	WALLS N	WALLS E	WALLS S	WALLS W	FLOOR MATL	FLOOR BASE	FLOOR MATL	FLOOR BASE	CLG A TYPE	CLG A HT	CLG B TYPE	CLG B HT	REMARKS
101	BREAK ROOM	P	P	P	P	CT	VCB	-	-	SAT	8'-8"	-	-	
102	STORAGE	P/FRP*	P/FRP*	P	P/FRP*	CT	VCB	-	-	SAT	8'-8"	-	-	* FRP TO 48" A.F.F.
103	UTILITY/EQUIPMENT	P	P	P	P	EPOXY	VCB	-	-	P	10'-6"	-	-	
104	HALL	P	P	P	P	CT	VCB	-	-	SAT	7'-6"	P *	7'-4" *	* GWB SOFFIT HT A.F.F.
105	TOILET	P/CT*	P/CT*	P/CT*	P/CT*	CT	CT	-	-	SAT	8'-8"	-	-	* SEE 2-A6 FOR CT HEIGHT

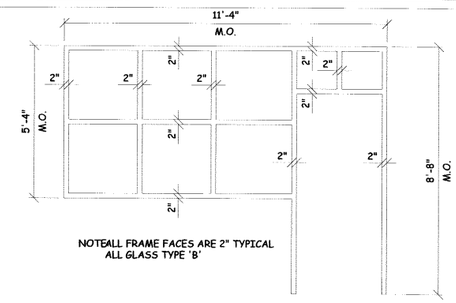

NOTE:ALL FRAME FACES ARE 2" TYPICAL
ALL GLASS TYPE "B"

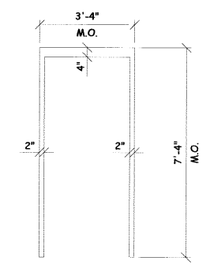

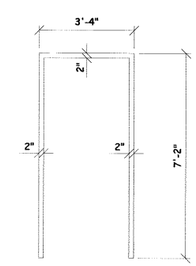

(A) EXTERIOR FIXED THERMAL - BREAK ALUMINUM STOREFRONT W/ TEMPERED INSULATED GLASS

(B) EXTERIOR MASONRY PROFILE PAINTED HOLLOW METAL FRAME

(C) INTERIOR DRYWALL PROFILE PAINTED HOLLOW METAL FRAME

DOOR FRAME TYPES 3/8" = 1'-0"

GRANT HAYS ASSOCIATES
ARCHITECTURE & INTERIOR DESIGN
P.O. BOX 6179 FALMOUTH MAINE 04105
207.871.5900 www.granthays.com

SEAL

LICENSED ARCHITECT
MICHAEL F. HAYS
No. 1724
STATE OF MAINE

REVISIONS

PROJECT NAME

MAINE TURNPIKE TOLL ADMINISTRATION BUILDING
MILE MAKER (MM) 53.0
WEST FALMOUTH MAINE 04105

SHEET

DOOR, WINDOW & FINISH SCHEDULES

DATE
14 AUGUST 2015

SCALE
AS NOTED

DRAWN
SAM/MFH

JOB NO.
150408

SHEET
A5

COPYRIGHT
REPRODUCTION OR REUSE OF THIS DOCUMENT WITHOUT WRITTEN PERMISSION FROM GRANT HAYS ASSOCIATES IS PROHIBITED.

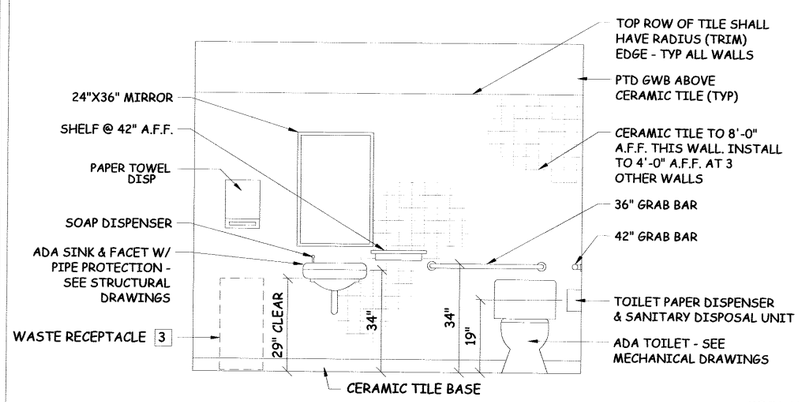

A TOILET ROOM 105 @ FIXTURE WALL

NOTES: ALL NON-FIXTURE WALLS SHALL RECIEVE CERAMIC TILE BASE, CERAMIC TILE WAINSCOT TO 48" A.F.F. W/PAINTED GWB ABOVE.

* SEE SHEET WF-A8 FOR ADA MOUNTING HEIGHTS FOR ALL TOILET ACCESSORIES

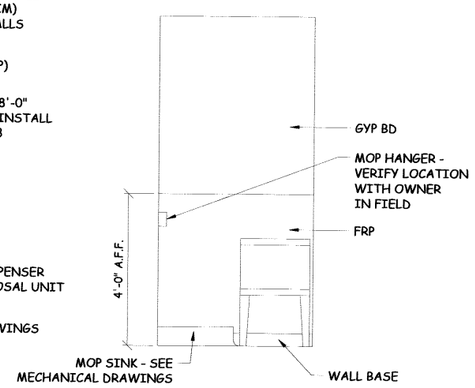

B STORAGE ROOM 102 @ MOP SINK

NOTES: 48" HIGH FRP WAINSCOT SHALL EXTEND TO DOOR FRAME EDGE AT WEST WALL & SIM DIMENSION AT EAST WALL

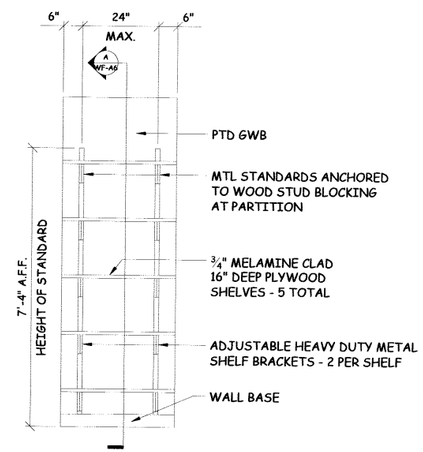

C STORAGE ROOM 102 @ SHELVES
SCALE: 1/2" = 1'-0"

1 INTERIOR ELEVATIONS

1/2" = 1'-0"

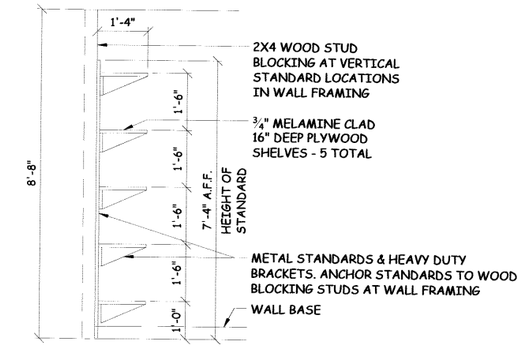

A SECTION AT STORAGE 102 SHELVES
SCALE: 1/2" = 1'-0"

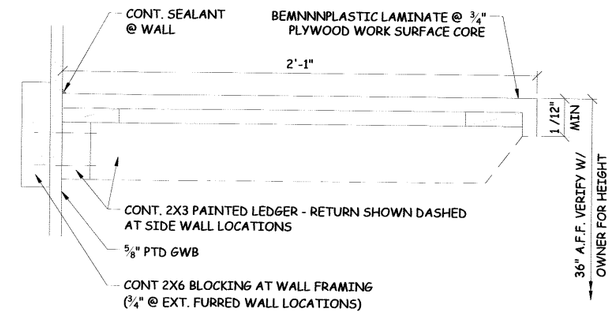

B SECTION AT BREAK ROOM 101 WORK SURFACES
SCALE: 3" = 1'-0"

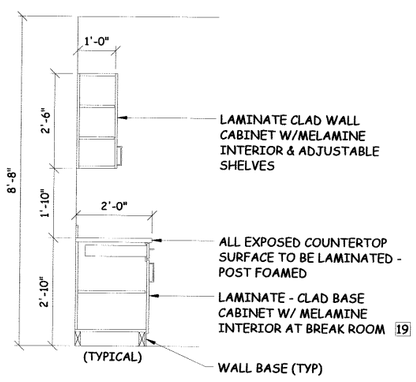

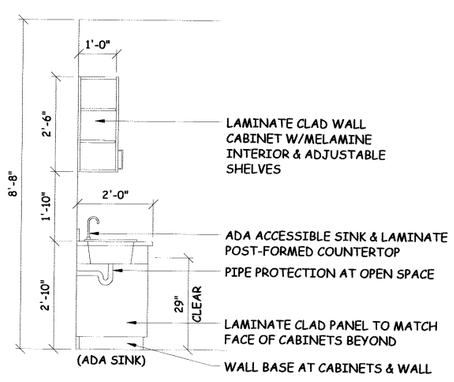

KITCHEN CABINET SECTIONS
SCALE: 1/2" = 1'-0"

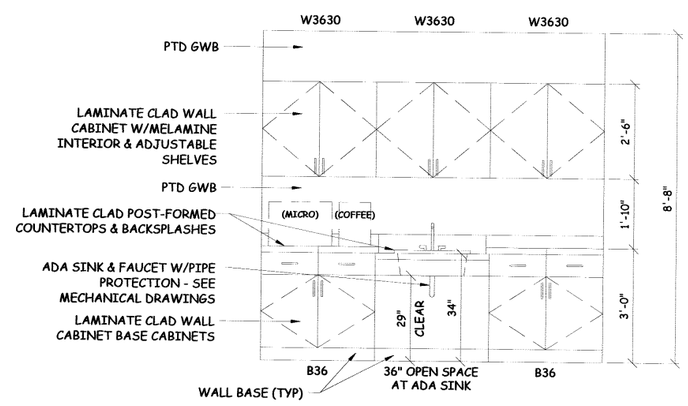

KITCHEN CABINET ELEVATION AT BREAK ROOM 101
SCALE: 1/2" = 1'-0"

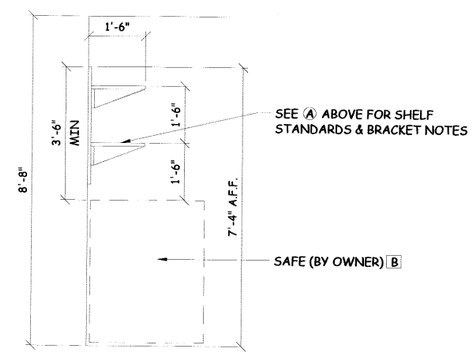

C SECTION AT BREAK ROOM 101 SAFE SHELVING
SCALE: 1/2" = 1'-0"

2 KITCHEN CABINETS

1/2" = 1'-0"

GRANT HAYS ASSOCIATES
ARCHITECTURE & INTERIOR DESIGN
P.O. BOX 6179 FALMOUTH MAINE 04105
207.871.5900 www.granthays.com

SEAL

LICENSED ARCHITECT MICHAEL F. HAYS No. 1724 STATE OF MAINE

REVISIONS

PROJECT NAME

MAINE TURNPIKE TOLL ADMINISTRATION BUILDING MILE MAKER (MM) 53.0

WEST FALMOUTH MAINE 04105

SHEET

INTERIOR ELEVATIONS & SECTIONS

DATE 14 AUGUST 2015

SCALE AS NOTED

DRAWN SAM/MFH

JOB NO. 150408

SHEET A6

COPYRIGHT
REPRODUCTION OR REUSE OF THIS DOCUMENT WITHOUT WRITTEN PERMISSION FROM GRANT HAYS ASSOCIATES IS PROHIBITED.

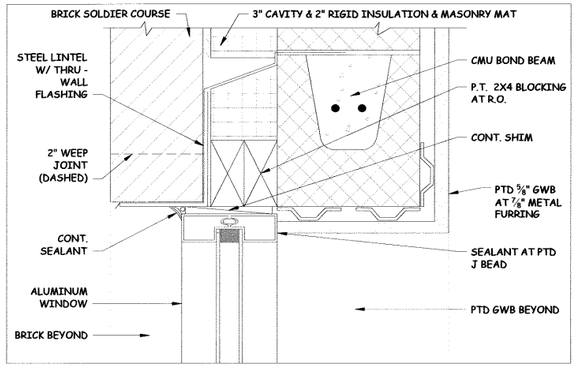

1 EXTERIOR WINDOW HEAD 3" = 1'-0"

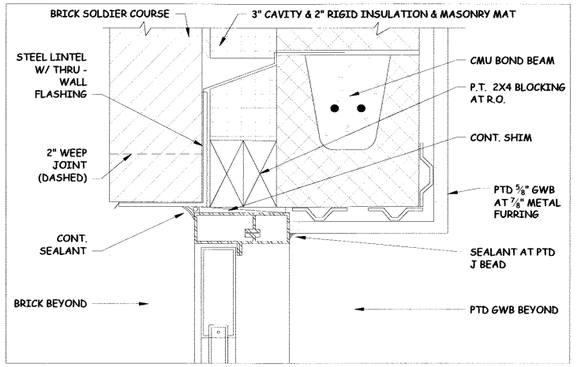

5 EXTERIOR DOOR HEAD 3" = 1'-0"

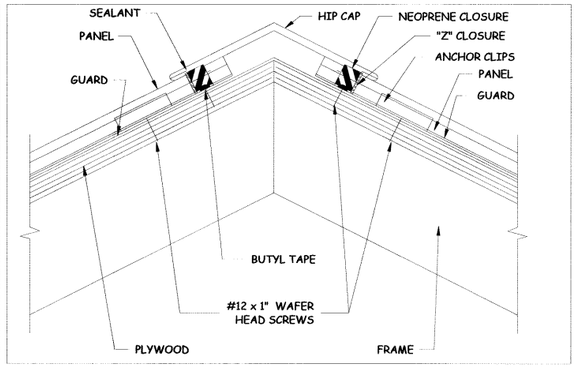

9 ROOF HIP/RIDGE DETAIL 3" = 1'-0"

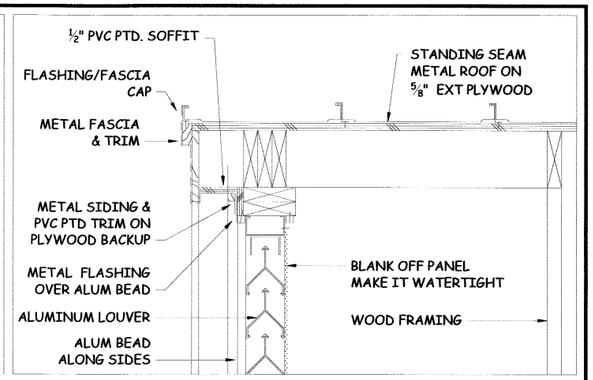

13 GABLE LOUVER RAKE DETAIL 1 1/2" = 1'-0"

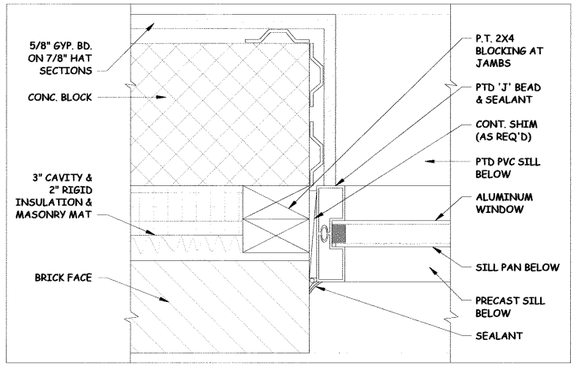

2 EXTERIOR WINDOW JAMB 3" = 1'-0"

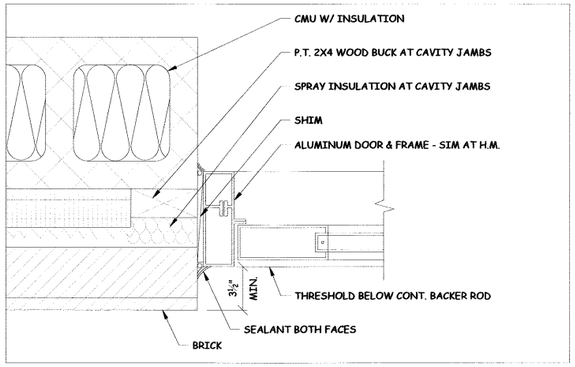

6 EXTERIOR DOOR JAMB DETAIL 3" = 1'-0"

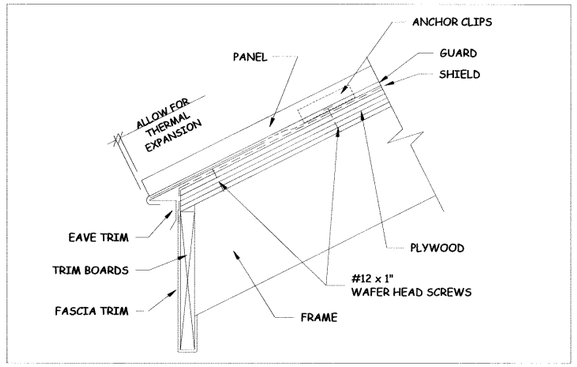

10 ROOF EAVE DETAIL 3" = 1'-0"

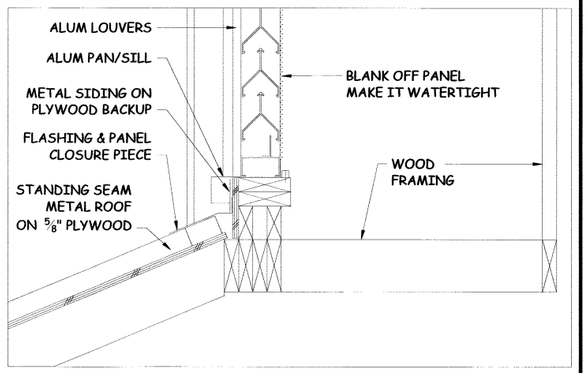

14 GABLE LOUVER SILL DETAIL 1 1/2" = 1'-0"

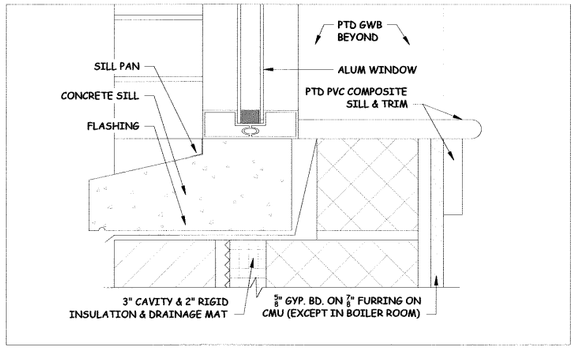

3 EXTERIOR WINDOW SILL 3" = 1'-0"

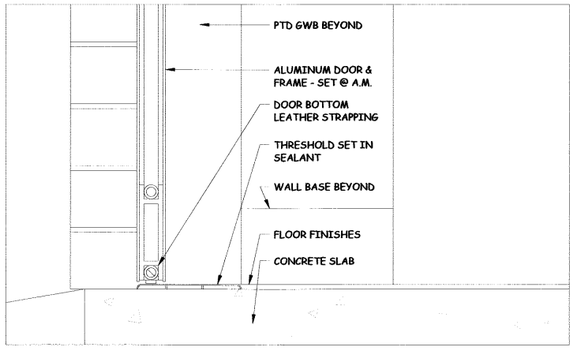

7 THRESHOLD DETAIL 3" = 1'-0"

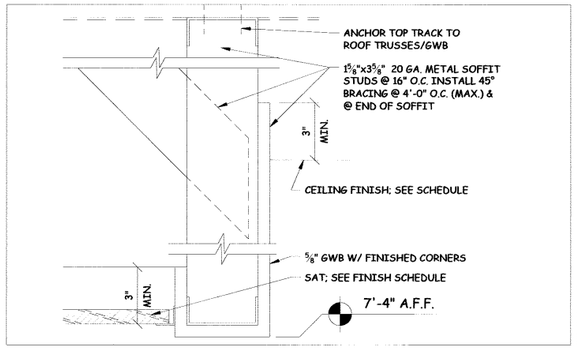

11 SOFFIT DETAIL 3" = 1'-0"

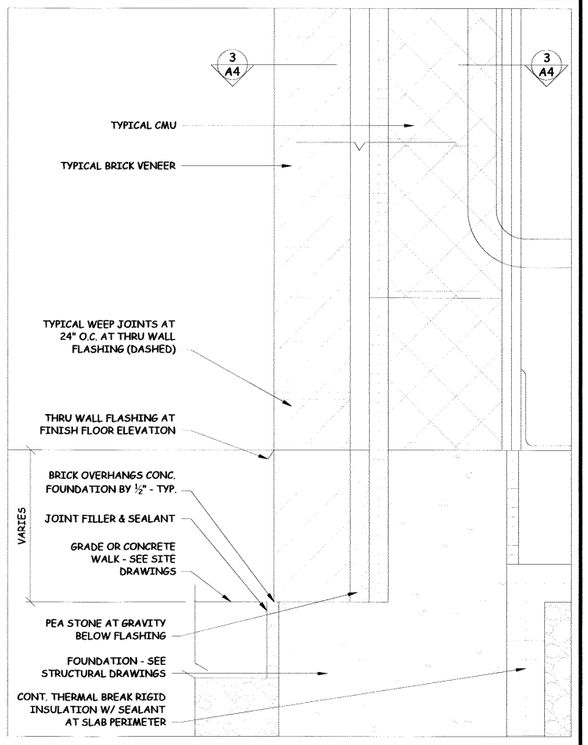

15 CAVITY WALL SECTION DETAIL 3" = 1'-0"

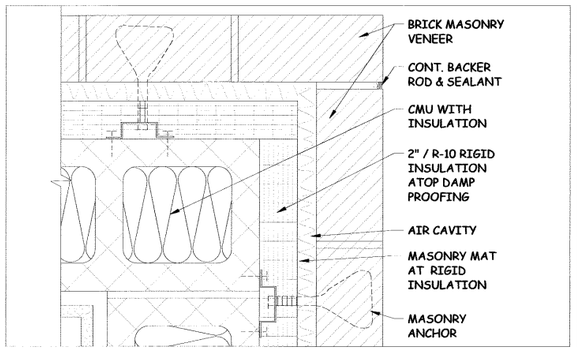

4 MASONRY EXPANSION JOINT DETAIL 3" = 1'-0"

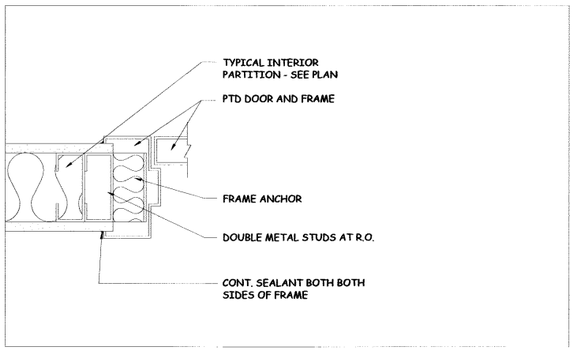

8 TYP. INTERIOR H.M. JAMB (HEAD SIM) 3" = 1'-0"

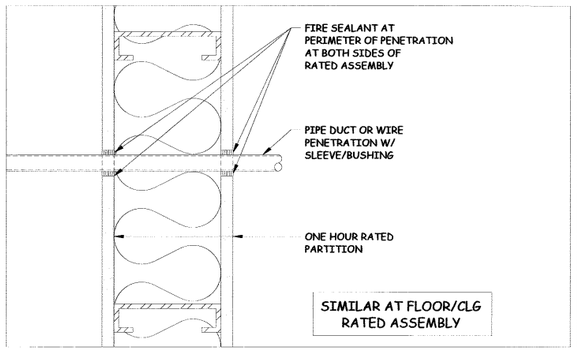

12 FIRE SEALANT AT PENETRATIONS 3" = 1'-0"

GRANT HAYS ASSOCIATES
ARCHITECTURE & INTERIOR DESIGN
P.O. BOX 6179 FALMOUTH MAINE 04105
207.871.5900 www.granthays.com

SEAL

LICENSED ARCHITECT MICHAEL F. HAYS No. 1724 STATE OF MAINE

REVISIONS

PROJECT NAME

MAINE TURNPIKE TOLL ADMINISTRATION BUILDING MILE MAKER (MM) 53.0

WEST FALMOUTH MAINE 04105

SHEET

DETAILS

DATE 14 AUGUST 2015

SCALE AS NOTED

DRAWN SAM/MFH

JOB NO. 150408

SHEET A7

COPYRIGHT
REPRODUCTION OR REUSE OF THIS DOCUMENT WITHOUT WRITTEN PERMISSION FROM GRANT HAYS ASSOCIATES IS PROHIBITED.

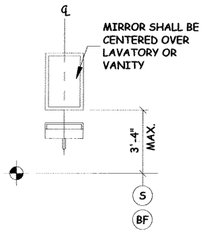

MIRROR OR MEDICINE CABINET
NTS

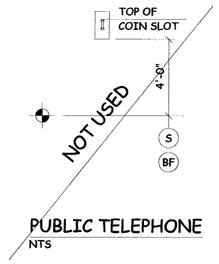

PUBLIC TELEPHONE
NTS

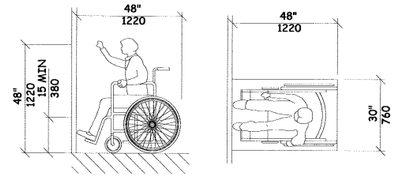

HIGH FORWARD REACH LIMIT
NTS

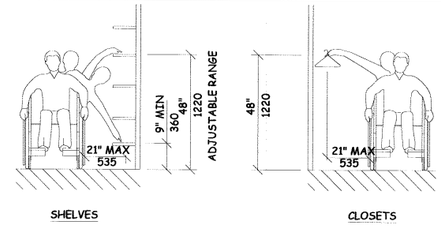

STORAGE SHELVES AND CLOSETS
NTS

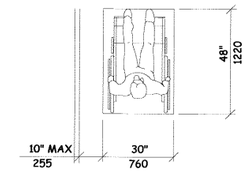

CLEAR FLOOR SPACE PARALLEL APPROACH
NTS

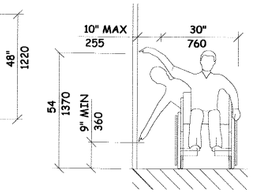

HIGH AND LOW SIDE REACH LIMITS
NTS

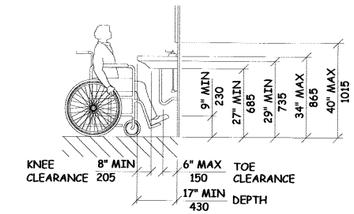

LAVATORY CLEARANCES
NTS

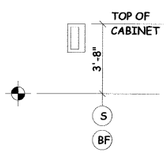

FIRE EXTINGUISHER CABINET (FEC)
NTS

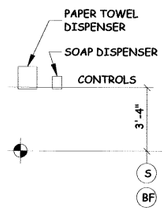

TOWEL & SOAP DISPENSERS
NTS

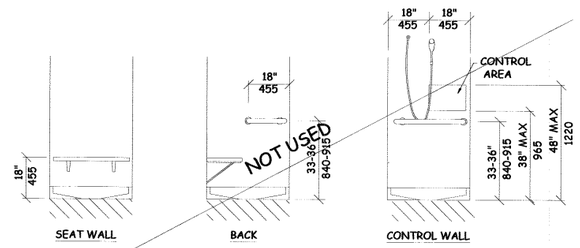

SHOWER SEAT ELEVATIONS
NTS

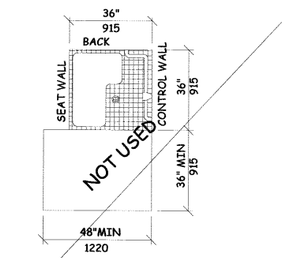

SHOWER STALL PLAN
NTS

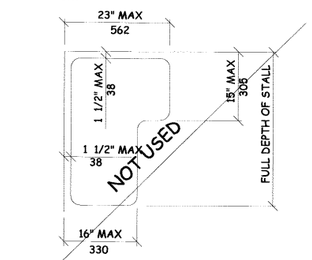

SHOWER SEAT DESIGN
NTS

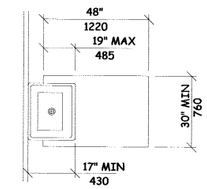

CLEAR FLOOR SPACE AT LAVATORIES
NTS

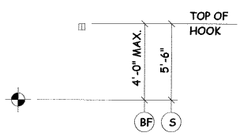

CLOTHES HOOK
NTS

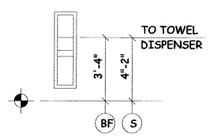

TOWEL DISPENSER DISPOSAL UNIT
NTS

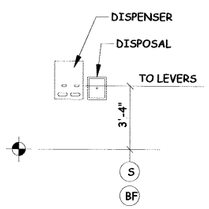

SANITARY NAPKIN DISPENSER & DISPOSAL
NTS

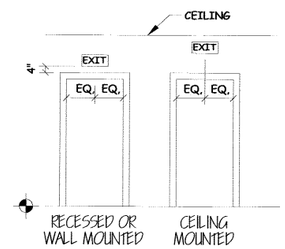

EXIT SIGNS
TYPICAL UNLESS OTHERWISE NOTED
NTS

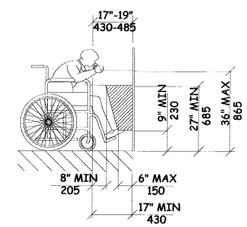

EQUIPMENT PERMITTED IN SHADED AREA DRINKING FOUNTAIN SPOUT HEIGHT AND KNEE CLEARANCE
NTS

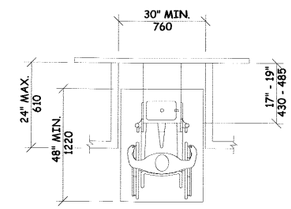

DRINKING FOUNTAIN
NTS

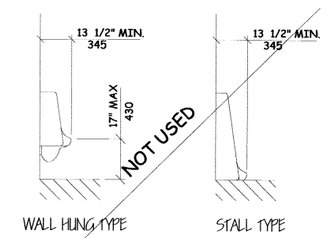

HEIGHT AND DEPTH OF URINALS
NTS

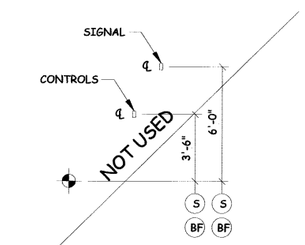

ELEVATOR CONTROLS & SIGNALS
NTS

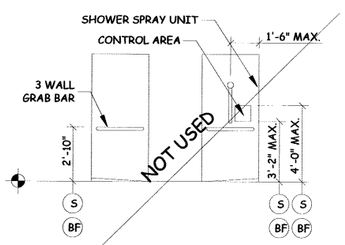

BARRIER FREE SHOWER
NTS

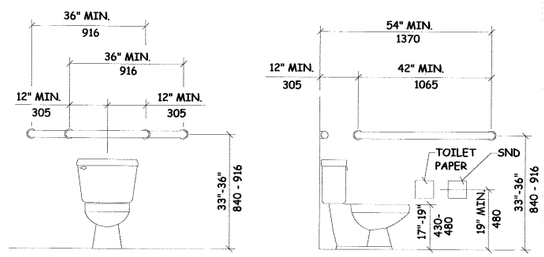

GRAB BARS AT WATER CLOSETS
NTS

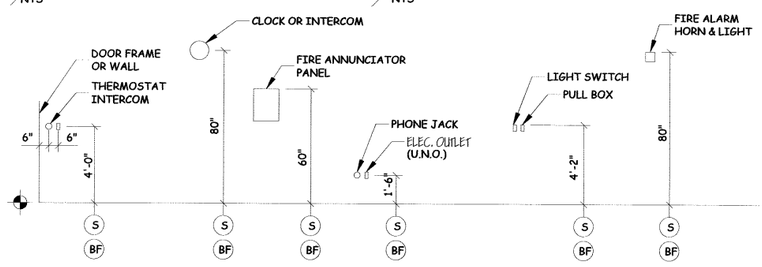

ELECTRICAL & FIRE PROTECTION DEVICES
TYPICAL UNLESS NOTED OTHERWISE
NTS

LEGEND:

- (S) STANDARD MOUNTING HEIGHT
- (BR) BARRIER FREE ADULT MOUNTING HEIGHT
- FINISH FLOOR LINE

NOTE:

MOUNT ALL FIXTURES AT STANDARD MOUNTING HEIGHT UNLESS INDICATED ON PLAN BY A SYMBOL. A ♿ SYMBOL AT ANY ROOM SHALL INCLUDE ONE OF ANY FIXTURE AND ACCESSORY WITHIN THE ROOM.

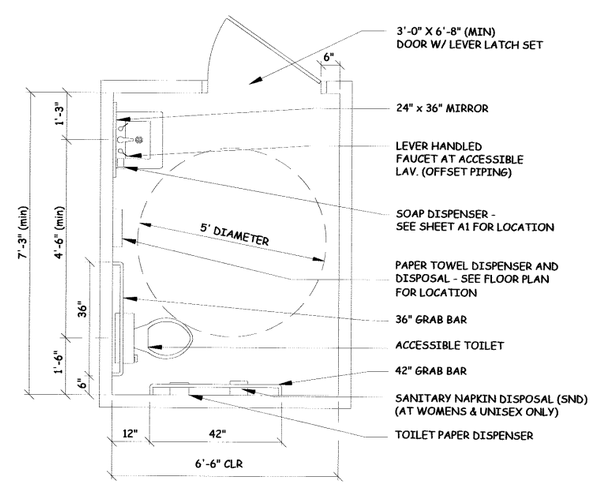

1 TYPICAL ACCESSORIES
NTS

ACCESSIBILITY ACCESSORY MOUNTING HEIGHTS

GRAB BARS	33"-36"
TOILET PAPER HOLDER	19" MIN
PAPER TOWEL DISPENSER	48" MAX
SOAP/DISPENSER AT WALL	48" MAX
SANITARY NAPKIN DISPOSAL	19" MAX
MIRROR (BOTTOM)	40" MAX
SHELVES/STORAGE	48" MAX
ELECTRICAL SWITCHES/OUTLECTS	48" MAX
COAT HOOKS/RODS	48" MAX
SIGNAGE (TO BRAILLE COMPONENT)	60" MAX

ACCESSIBILITY GENERAL NOTES

1. DOORWAYS SHALL HAVE A MINIMUM CLEAR WIDTH OF 32" WITH THE DOOR OPEN 90 DEGREES. MEASURED BETWEEN THE FACE OF THE DOOR AND THE OPPOSITE STOP.
2. ALL DOORS SHALL HAVE LEVER HANDLE HARDWARE, EXCEPT AT SECURED STORAGE ROOMS, MECHANICAL ROOMS, AND ELEVATOR MACHINE ROOMS.
3. ALL CLOSERS SHALL BE 5LB PULL MAXIMUM AT DOORS EQUIPPED WITH LEVER HANDLE HARDWARE.
4. ALL DOORS WITH CLOSERS SHALL HAVE 18" CLEAR DISTANCE FROM THE LATCHSIDE OF THE OPENING TO ANY ADJACENT WALL OR OBSTRUCTION ON THE PULL SIDE OF THE OPENING.
5. ALL DOORS WITH CLOSERS SHALL HAVE 12" CLEAR DISTANCE FROM THE LATCHSIDE OF THE OPENING TO ANY ADJACENT WALL OR OBSTRUCTION ON THE PUSH SIDE OF THE OPENING.
6. ALL SIGNAGE SHALL BE MOUNTED 60" AFF TO BRAILLE COMPONENT AT LATCH-SIDE WALL OF DOORS AND OPENINGS.

GRANT HAYS ASSOCIATES
ARCHITECTURE & INTERIOR DESIGN
P.O. BOX 6179 FALMOUTH MAINE 04105
207.871.5900 www.granthays.com

SEAL

LICENSED ARCHITECT
MICHAEL F. HAYS
No. 1724
STATE OF MAINE

REVISIONS

PROJECT NAME

MAINE TURNPIKE TOLL ADMINISTRATION BUILDING
MILE MAKER (MM) 53.0
WEST FALMOUTH MAINE 04105

SHEET

ACCESSIBILITY DETAILS & NOTES

DATE
14 AUGUST 2015

SCALE
NONE

DRAWN
SAM/MFH

JOB NO.
150408

SHEET
A8

COPYRIGHT
REPRODUCTION OR REUSE OF THIS DOCUMENT WITHOUT WRITTEN PERMISSION FROM GRANT HAYS ASSOCIATES IS PROHIBITED.

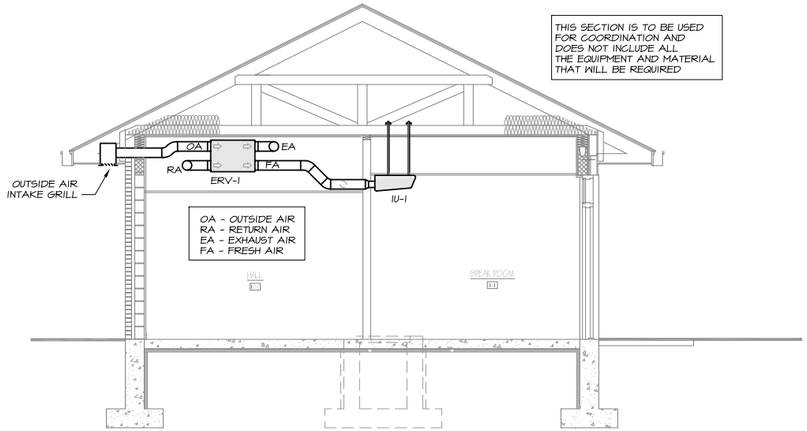

1 SECTION THROUGH ERV-1

SCALE: 1/4" = 1'-0"

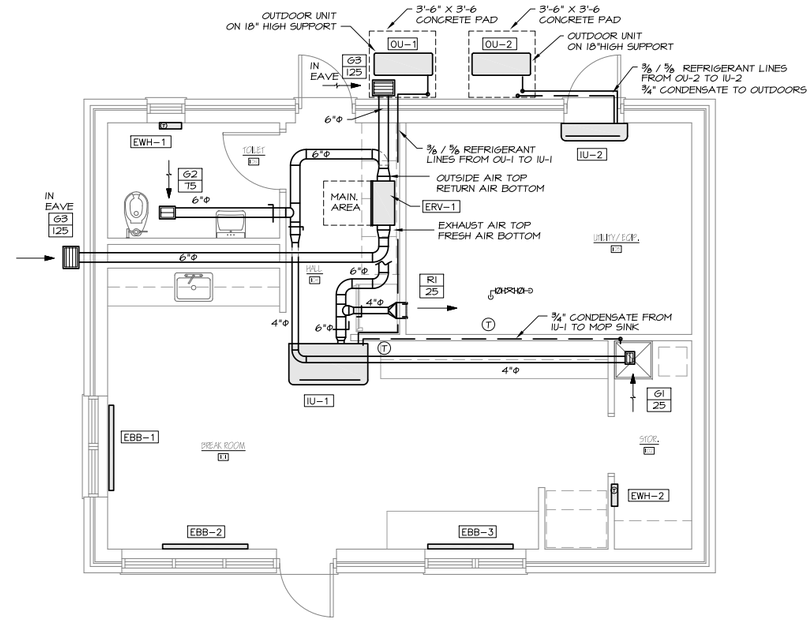

3 MECHANICAL FLOOR PLAN

SCALE: 1/4" = 1'-0"

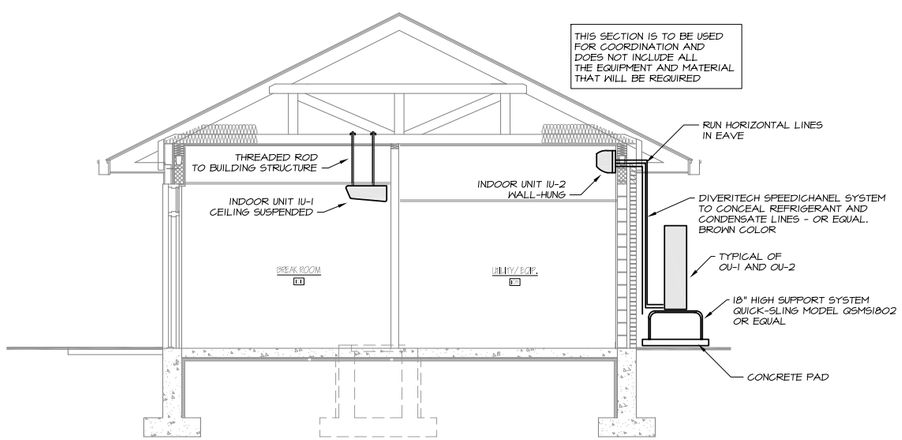

2 SECTION THROUGH OU-1,2 & IU-1,2

SCALE: 1/4" = 1'-0"

SHEETMETAL LEGEND

- EXHAUST INLET, SURFACE MOUNT
- DOUBLE DEFLECTION REGISTER
- MANUAL DAMPER - LOCKING QUADRANT
- THERMOSTAT

1/4" = 1'-0" (0' 1' 2' 3' 4' 8' 12' 16')

MECHANICAL SYSTEMS ENGINEERS
ROYAL RIVER CENTER, UNIT 10B
10 FOREST FALLS DRIVE, YARMOUTH, MAINE 04096
(207) 846-1441
FACEBOOK: MECHANICAL SYSTEMS ENGINEERS
© COPYRIGHT 2015

GRANT HAYS ASSOCIATES
ARCHITECTURE & INTERIOR DESIGN
P.O. BOX 6179 FALMOUTH MAINE 04105
207.871.5900 www.granthays.com

SEAL

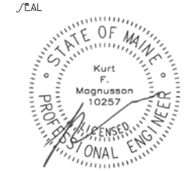

REVISIONS

PROJECT NAME

MAINE TURNPIKE TOLL ADMINISTRATION BUILDING
MILE MARKER (MM) 53.0
WEST FALMOUTH MAINE 04105

SHEET

MECHANICAL PLAN VIEW & SECTIONS

DATE 14 August 2015

SCALE 1/4" = 1'-0"

DRAWN KFM

JOB NO. 150408

SHEET M1

COPYRIGHT
REPRODUCTION OR REUSE OF THIS DOCUMENT WITHOUT WRITTEN PERMISSION FROM GRANT HAYS ASSOCIATES IS PROHIBITED.

GENERAL NOTES

1. All systems are to be to meet the following Codes and Standards.
   - 1.1. ASHRAE 90.1 2007 - Energy Standard for Commercial Buildings.
   - 1.2. ASHRAE 60.1 2007 - Standard for Indoor Air Quality in Commercial Buildings.
   - 1.3. 2009 IECC - International Energy Conservation Code.
   - 1.4. NFPA - National Fire Protection Association Standards.
2. Do not cut any structural members with pre-approval of structural engineer.

SHEETMETAL NOTES

1. All ductwork to be fabricated and installed per SMACNA Low Pressure Ductwork Standards.
2. Ductwork is shown diagrammatically and does not indicate all the offsets, rises and drops that will be required.
3. All outside air and fresh air ductwork ductwork above ceiling to be insulated with 1-1/2" fiberglass duct wrap with foil faced vapor barrier.

PIPING NOTES

1. Piping is shown diagrammatically and does not indicate all the offsets, rises and drops that will be required.
2. All refrigeration piping to be Type "K" copper or ACR Tube.
3. Insulate all refrigeration piping with 1" Closed Cell Insulation.
4. Paint all outdoor refrigerant piping with a protective paint approved by the equipment manufacturer.

CONTROL NOTES

1. It will be the Mechanical Contractor's responsibility to provide and install all controls and all control wiring.
2. All control wiring that is run in concealed spaces to be plenum rated.
3. All control wiring that is run exposed shall be in electrical conduit provided and installed by the mechanical contractor (or his ATC subcontractor).
4. Thermostats for the heat pump systems IU-1,2 to be hard-wired and provided by the heat pump manufacturer.
   - 4.1. First stage heat to be the heat pump.
   - 4.2. Second stage heat for OU/IU-1 to be the electric baseboard heat EBB-1,2,3. Provide transformer and wiring to enable the relays in EBB-1,2,3 on a call from the heat relay in IU-1.
5. Thermostats for the electric wall heaters EWH-1,2 to be built-in.
6. ERV-1 to run 24/7

VARIABLE REFRIGERANT FLOW OUTDOOR UNIT SCHEDULE

TAG	DESIGN MANUFACTURER AND MODEL	NOMINAL TONS	COOLING BTUH *	HEATING BTUH **	ELECTRIC			REFRIGERANT	WEIGHT	REMARKS
					POWER	MCA	MOP			
OU-1	MITSUBISHI PUZ-HA30NHA4-BS	2.5	30,000	32,000	208/60/1	28	30	410A	265 LBS	MOUNT ON 18" HIGH SUPPORT BASE, SEACOAST PROTECTION AND WIND BAFFLE
OU-2	MITSUBISHI PUZ-HA30NHA4-BS	2.5	30,000	32,000	208/60/1	28	30	410A	265 LBS	MOUNT ON 18" HIGH SUPPORT BASE, SEACOAST PROTECTION AND WIND BAFFLE

* COOLING OPERATING RANGE OF 0 DEG. F. TO 115 DEG. F. ** HEATING OPERATING RANGE OF -13 DEG. F. TO 70 DEG. F.

VARIABLE REFRIGERANT FLOW INDOOR UNIT SCHEDULE

TAG	DESIGN MANUFACTURER AND MODEL	NOMINAL TONS	CFM	ELECTRIC		REFRIGERANT	WEIGHT	REMARKS
				POWER	AMPS			
IU-1	MITSUBISHI PCA-A30KA4	2.5	670	208/60/1	0.54	410A	71 LBS	CEILING SUSPENDED WITH EXTERNAL HEAT RELAY KIT AND WIRED THERMOSTAT
IU-2	MITSUBISHI PKA-A30KA4	2.5	700	208/60/1	0.36	410A	46 LBS	WALL HUNG WITH WIRED THERMOSTAT

HEAT RECOVERY UNIT SCHEDULE

TAG	DESIGN MANUFACTURER AND MODEL	RECOVERY TYPE	EFFECTIVENESS			WINTER O.A.		EXHAUST AND SUPPLY		ELECTRIC		WEIGHT	REMARKS
			SENSIBLE	WINTER	SUMMER	TEMP.	GRAINS	EXHAUST	SUPPLY	POWER	FLA		
ERV-1	RENEWAIRE EV130	CORE	72%	66%	50%	-5	2.5	125	125	120/60/1	1.3	49 LBS	WITH BACKDRAFT DAMPERS AND 3' POWER CORD

ELECTRIC BASEBOARD SCHEDULE

TAG	DESIGN MANUFACTURER AND MODEL	LENGHT	BTUH	ELECTRIC			REMARKS
				POWER	AMPS	WATTS	
EBB-1	MARKEL F3712-060	5'	4250	208/60/1	6	1250	ARCHITECTURAL, 12 GAUGE WHITE HOUSING WITH BUILT-IN HEATING RELAY
EBB-2	MARKEL F3712-060	5'	4250	208/60/1	6	1250	ARCHITECTURAL, 12 GAUGE WHITE HOUSING WITH BUILT-IN HEATING RELAY
EBB-3	MARKEL F3712-060	5'	4250	208/60/1	6	1250	ARCHITECTURAL, 12 GAUGE WHITE HOUSING WITH BUILT-IN HEATING RELAY

ELECTRIC WALL HEATERS

TAG	DESIGN MANUFACTURER AND MODEL	BTUH	ELECTRIC			REMARKS
			POWER	AMPS	WATTS	
EWH-1	MARKEL E3321TD-RP	2560	120/60/1	6.25	750	COMMERCIAL FAN-FORCED WITH 4" SURFACE MOUNTING FRAME AND BUILT-IN THERMOSTAT
EWH-2	MARKEL E3321TD-RP	2560	120/60/1	6.25	750	COMMERCIAL FAN-FORCED WITH 2" SEMI-RECESSED FRAME AND BUILT-IN THERMOSTAT

AIR TERMINAL SCHEDULE

TAG	DESIGN MANUFACTURER & MODEL	SIZE	MAX NC	MAX SP	REMARKS
R1	PRICE 5205	8"X6"	20	.07	DOUBLE DEFLECTION SUPPLY REGISTER
G1	PRICE 530	8"X6"	20	.07	45 DEGREE RETURN GRILLE FOR SURFACE MOUNT
G2	PRICE 530	10"X8"	20	.07	45 DEGREE RETURN GRILLE FOR SURFACE MOUNT
G3	PRICE 530	12"X10"	20	.07	45 DEGREE OUTSIDE AIR AND EXHAUST GRILLE FOR SURFACE MOUNT

MECHANICAL SYSTEMS ENGINEERS
ROYAL RIVER CENTER, UNIT 10B
10 FOREST FALLS DRIVE, YARMOUTH, MAINE 04096
(207) 846-1441
FACEBOOK: MECHANICAL SYSTEMS ENGINEERS

© COPYRIGHT 2015

GRANT HAYS ASSOCIATES
ARCHITECTURE & INTERIOR DESIGN
P.O. BOX 6179 FALMOUTH MAINE 04105
207.871.5900 www.granthays.com

SEAL

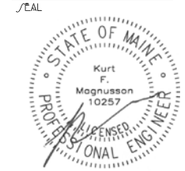

REVISIONS

PROJECT NAME

MAINE TURNPIKE TOLL ADMINISTRATION BUILDING
MILE MARKER (MM) 53.0
WEST FALMOUTH MAINE 04105

SHEET

MECHANICAL SCHEDULES NOTES

DATE
14 August 2015

SCALE
1/4" = 1'-0"

DRAWN
KFM

JOB NO.
150408

SHEET
M2

COPYRIGHT
REPRODUCTION OR REUSE OF THIS DOCUMENT WITHOUT WRITTEN PERMISSION FROM GRANT HAYS ASSOCIATES IS PROHIBITED.

LEGEND

ADA	AMERICANS WITH DISABILITIES ACT
AFF	ABOVE FINISHED FLOOR
BFP	BACKFLOW PREVENTER
CNTR	COUNTER
CO	CLEANOUT
CONT	CONTINUATION
COORD	COORDINATION
CW	COLD WATER,
C&HW	COLD & HOT WATER
DAW	DROP AT WALL
DIV	DIVISION
DIW	DROP IN WALL
DN	DOWN
DNAW	DOWN AT WALL
DNIW	DOWN IN WALL
DO	DRAWOFF
ET	EXPANSION TANK
FCO	FLOOR CLEANOUT
FD	FLOOR DRAIN
GPF	GALLONS PER FLUSH
HB	HOSE BIB
HW	HOT WATER
IDW	INDIRECT WASTE
LV	LAVATORY
MTD	MOUNTED
PC	PLUMBING CONTRACTOR
PG	PRESSURE GAUGE
S	SANITARY WASTE
SA	SHOCK ABSORBER
SS	STAINLESS STEEL
T	THERMOMETER
TP	TRAP PRIMER
TYP	TYPICAL
V	VENT
VB	VACUUM BREAKER
VC	VITREOUS CHINA
VRV	VACUUM RELIEF VALVE
VS	VENT STACK
VTR	VENT THRU ROOF
W	WASTE
W/	WITH
WC	WATER CLOSET
WCO	WALL CLEANOUT
WH	WATER HEATER

SANITARY/ WASTE PIPING BELOW SLAB / GRADE

SANITARY / WASTE PIPING ABOVE SLAB

VENT PIPING ABOVE SLAB

VENT PIPING BELOW SLAB

COLD WATER PIPING

COLD WATER PIPING BELOW SLAB

120 HOT WATER PIPING

BALL VALVE

VERTICAL BALL VALVE

CHECK VALVE

BACKFLOW PREVENTER

VACUUM RELIEF VALVE

THERMOMETER

PRESSURE GAUGE

TRAP PRIMER

DROP/RISE IN LINE

LINE UP TO FLOOR ABOVE

TEE -DROP

SHOCK ABSORBER

MIXING VALVE

FLOOR CLEANOUT

FLOOR DRAIN

HOSE BIB, NON-FREEZE

WATER METER

XX-1 PLUMBING FIXTURE/ EQUIPMENT NUMBER TAG

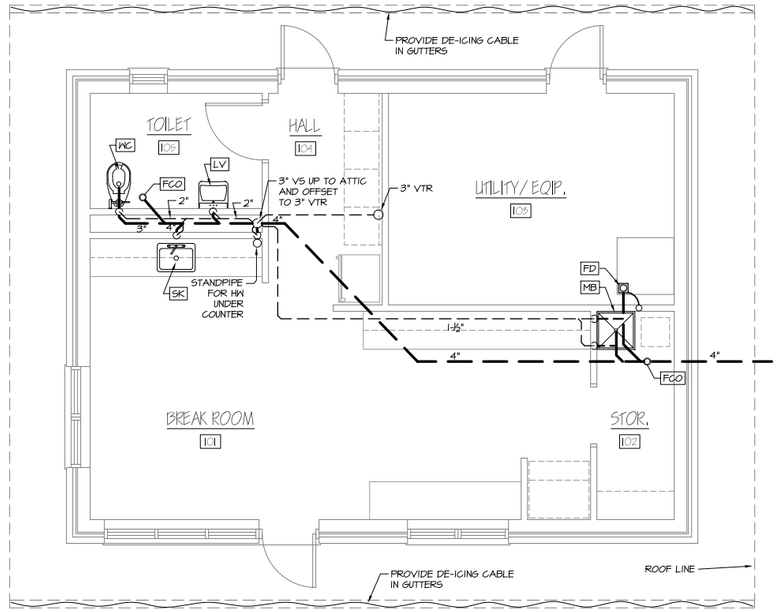

DRAIN AND VENT PLAN

SCALE: 1/4" = 1'-0"

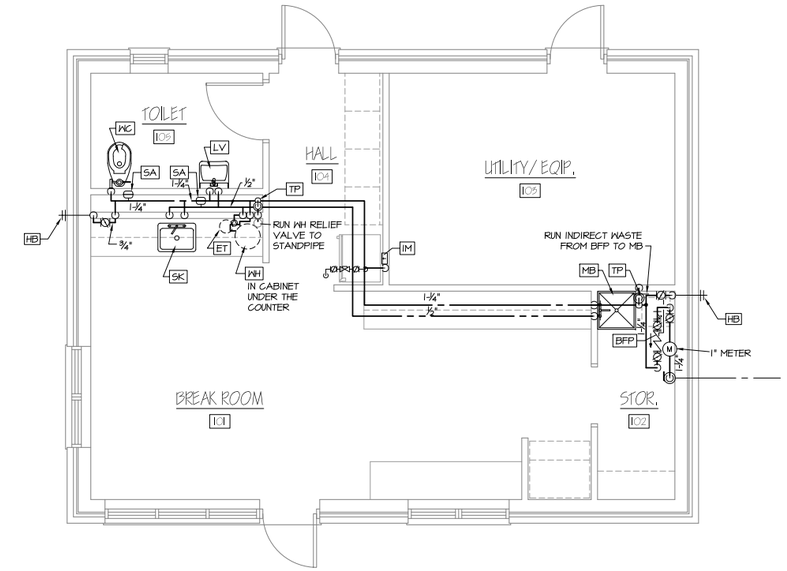

DOMESTIC WATER PLAN

SCALE: 1/4" = 1'-0"

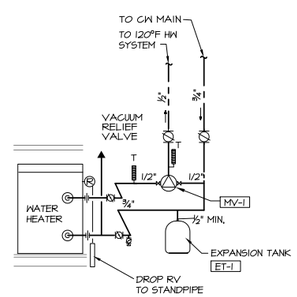

1 / P1 **HOT WATER TANK DIAGRAM**

SCALE: NONE

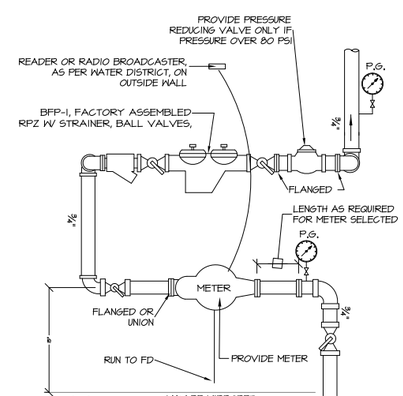

2 / P1 **WATER ENTRANCE**

SCALE: NONE

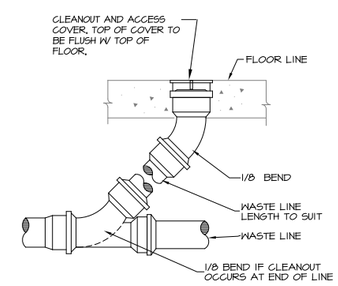

3 / TYP **FLOOR CLEAN OUT DETAIL**

SCALE: NONE

¼" = 1'-0" 0' 1' 2' 3' 4' 8' 12' 16'

MECHANICAL SYSTEMS ENGINEERS
ROYAL RIVER CENTER, UNIT 10B
10 FOREST FALLS DRIVE, YARMOUTH, MAINE 04096
(207) 846-1441
FACEBOOK: MECHANICAL SYSTEMS ENGINEERS

© COPYRIGHT 2015

GRANT HAYS ASSOCIATES
ARCHITECTURE & INTERIOR DESIGN
P.O. BOX 6179 FALMOUTH MAINE 04105
207.871.5900 www.granthays.com

SEAL

STATE OF MAINE
Kurt F. Magnusson
10257
LICENSED PROFESSIONAL ENGINEER

REVISIONS

PROJECT NAME

MAINE TURNPIKE TOLL ADMINISTRATION BUILDING
MILE MARKER (MM) 53.0
WEST FALMOUTH MAINE 04105

SHEET

PLUMBING PLANS & DETAILS

DATE 14 August 2015

SCALE 1/4" = 1'-0"

DRAWN EJP

JOB NO. 150408

SHEET P-1

COPYRIGHT
REPRODUCTION OR REUSE OF THIS DOCUMENT WITHOUT WRITTEN PERMISSION FROM GRANT HAYS ASSOCIATES IS PROHIBITED.

GENERAL NOTES

1. All work shall be in accordance with the State Plumbing Code, local codes and ordinances, National Fire Code (NFPA), or these plans or specifications, whichever is more strict.

2. All drawings are schematic only, and are intended to indicate the intent, extent, and general arrangement of work. They are not meant to show every fitting, change of direction or every situation. Verify locations in the field. Work indicated shall be furnished complete to perform the function intended.

3. Carefully coordinate the space requirements and location of piping with the other trade contractors.

4. For pipe sizes not shown on floor plans, refer to: appropriate schedules, details, specifications, equipment connection sizes and minimum Code requirements. For otherwise indeterminable pipe segments, the size shall be the same as the largest adjacent segment. Where pipe sizes are erroneously shown to decrease then increase, the smaller segment shall be increased to match the larger segment. Pipe sizes are nominal (not O.D.) unless specifically noted otherwise.

5. All piping in finished areas shall run concealed above ceilings, in walls, in soffits and in chases unless noted otherwise.

6. No structural members shall be cut without approval of the Architect.

7. All plumbing shall be supported from the building structure. All piping drops to fixtures shall be anchored solid to walls with a steel support bracket with adjustable clip.

8. Openings between pipes and sleeves shall be caulked and sealed smoke and water tight. All pipe penetrations through a fire rated wall or floor shall have a UL rated fire stop system rated to match the rating of the wall, as per the NFPA.

9. All wall fixtures shall be carrier mounted unless otherwise specified.

10. All domestic water and storm water piping, above slab, shall be insulated unless otherwise specified.

11. Run all piping on warm side of building insulation. No water, or drain lines shall be run in exterior walls.

DRAIN SPEC. SCHEDULE

TAG	ITEM	WASTE	VENT	REMARKS
FCO	ROUND - FINISHED AREAS FLOOR CLEANOUT	SIZE OF PIPE	-	ADJUSTABLE
FD	FLOOR DRAIN	3"	1-1/2"	ADJUSTABLE W/ TRAP PRIMER CONNECTION

PLUMBING FIXTURE SCHEDULE

TAG	FIXTURE	COLD WATER	HOT WATER	SAN/ WASTE	VENT	SPECIFICATION AND REMARKS
LV	LAVATORY, WALL MTD - ADA	1/2"	1/2"	1-¼"x 1-½"	1-½"	V.C., 4" CENTERS, COLOR WHITE. SINGLE LEVER DECK MOUNTED LAVATORY FAUCET W/ POP-UP DRAIN, CERAMIC CARTRIDGES, CHROME. ADA INSULATED P-TRAP & SUPPLIES W/ WHEEL HANDLE STOPS & ESCUTCHEONS. FLOOR BOLTED WALL CARRIER FOR CONCEALED ARMS.
MB	MOP BASIN	1/2"	1/2"	3"	1-½"	MOLDED STONE MOP SERVICE BASIN, 24"x24"x10", SERVICE FAUCET WITH VACUUM BREAKER SPOUT AND INTEGRAL STOPS, STAINLESS STEEL WALL GUARDS, MOP BRACKET, VINYL BUMPER GUARD.
SK	SINK, KITCHEN - ADA	1/2"	1/2"	2"	1-½"	22X25X6-1/2" DEEP SINK, 18 GA 304 S.S. REAR DRAIN. KITCHEN FAUCET WITH SPRAY, BASKET DRAIN, CHROME SUPPLIES WITH WHEEL HANDLE STOPS. ADA INSULATION KIT.
WC-1	WATER CLOSET, TANK TYPE - ADA	1"	-	3"	2"	ELONGATED TOILET 16-1/2" HIGH BOWL, VITREOUS CHINA, , 1,000G MAP, INSULATED TANK, 1.28 GPF, LEFT HANDED FRONT MOUNTED TRIP LEVER, CLOSE COUPLED TANK, BOLT CAPS, FULLY GLAZED TRAPWAY, COLOR WHITE. WHITE, ELONGATED, EXTRA HEAVY DUTY, SOLID PLASTIC OPEN FRONT WITH COVER, ANTIMICROBIAL, STAINLESS STEEL POSTS. CHROME WATER CLOSET SUPPLY WITH WHEEL HANDLE STOP.

ELECTRIC WATER HEATER SCHEDULE

TAG	ITEM	GAL	WATTS	VOLTS	PH	SPECIFICATION & REMARKS
WH-1	DOMESTIC HOT WATER	10	4500	240	1	COMPACT. ELEC. BY EC

WATER SPECIALTY SCHEDULE

TAG	ITEM	CW	HW	OUTLET	SPECIFICATION & REMARKS
BFP-1	WATER ENTRANCE BACK FLOW PREVENTER	1"	-	3/4"	RPZ BFP W/ STRAINER, UNIONS
ET-1	EXPANSION TANK	3/4"	-	-	0.85 GAL ACCEPTANCE
HB-1	HOSE BIB W/ VB.	3/4"	-	¾" GHT	SELF DRAINING WALL FAUCET W/ VB
MV-1	MASTER MIXING VALVE	1/2"	1/2"	1/2" 120°	THERMOSTATIC W/ CHECK STOPS,
SA-1	SHOCK ABSORBER	1/2"		-	BELLOWS TYPE WATER HAMMER ARRESTOR
TP-1	TRAP PRIMER	1/2"		-	WITH SPLITTER

¼" = 1'-0"

0' 1' 2' 3' 4' 8' 12' 16'

MECHANICAL SYSTEMS ENGINEERS
ROYAL RIVER CENTER, UNIT 10B
10 FOREST FALLS DRIVE, YARMOUTH, MAINE 04096
(207) 846-1441
FACEBOOK: MECHANICAL SYSTEMS ENGINEERS
© COPYRIGHT 2015

GRANT HAYS ASSOCIATES
ARCHITECTURE & INTERIOR DESIGN
P.O. BOX 6179 FALMOUTH MAINE 04105
207.871.5900 www.granthays.com

SEAL

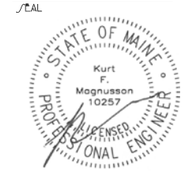

REVISIONS

PROJECT NAME

MAINE TURNPIKE TOLL ADMINISTRATION BUILDING
MILE MARKER (MM) 53.0
WEST FALMOUTH MAINE 04105

SHEET

PLUMBING NOTES & SCHEDULES

DATE
14 August 2015

SCALE
NONE

DRAWN
EJP

JOB NO.
150408

SHEET
P-2

COPYRIGHT
REPRODUCTION OR REUSE OF THIS DOCUMENT WITHOUT WRITTEN PERMISSION FROM GRANT HAYS ASSOCIATES IS PROHIBITED.

1 ELECTRICAL SYMBOLS
NO SCALE

PLAN SYMBOLS

SYMBOL	DESCRIPTION
	125V, 20A, DUPLEX GROUNDED RECEPTACLE GFI = Ground Fault Type WP = Weatherproof AC = Mount 6" Above Sink or Counter REF = Refrigerator
	125V, 20A, QUAD GROUNDED RECEPTACLE
30A	125/250V, 30A, GROUNDED DRYER RECEPTACLE
	TELEPHONE OUTLET
TV	CABLE TELEVISION OUTLET
WN	WIRELESS DATA NETWORK OUTLET Mount 12" Below Ceiling
	ELECTRIC PANELBOARD (See Plans for Details)
	CONTROL PANEL (See Plans for Details)
S	FIRE ALARM SMOKE DETECTOR
H	FIRE ALARM HEAT DETECTOR
F*	FIRE ALARM AUDIO VISUAL Indicates Visual Only
F	FIRE ALARM PULL STATION

SYMBOL	DESCRIPTION
J1 HP1 #2	CEILING MOUNTED LIGHT Panelboard & Circuit Designation Fixture Designation
HP1 #2 R1	RECESSED/CEILING/MTD LIGHT FIXTURE Panelboard & Circuit Designation Fixture Designation
S3	LIGHT/DEVICE SWITCH 3 = Three-Way Type P = Pilot Light
M	CEILING MTD LTG CONTROL MOTION SENSOR
30/2	UNFUSED DISCONNECT SWITCH No. Of Poles Ampere Rating
SM	MANUAL MOTOR STARTER
J CR	JUNCTION BOX CR = Card Reader

2 PROJECT NOTES
NO SCALE

1. PROVIDE LIGHTING FIXTURES AS FOLLOWS:
   TYPE A1 CREE LIGHTING #ZR24-40L HE-35K-10V, OR APPROVED EQUAL
   TYPE A2 CREE LIGHTING #ZR22-32L HE-35K-10V,
   TYPE J1 CREE LIGHTING #LS8-80L-35K-10V, OR APPROVED EQUAL
   TYPE E1 DUAL-LITE #LZ15
   TYPE S1 CREE LIGHTING #LR6-18L-35K-120V-LT6A-DR
   TYPE X1 DUAL-LITE #LX-U-R-W
2. MOUNT DISCONNECT SWITCHES INDICATED ABOVE SUSPENDED ACOUSTICAL TILE CEILING.
3. COORDINATE THE EXACT LOCATION AND MOUNTING HEIGHT OF RECEPTACLE POWERING MECHANICAL UNIT ERV-1 WITH MECHANICAL CONTRACTOR PRIOR TO ROUGH-IN.
4. PLUMBING CONTRACTOR TO PROVIDE TWO LENGTHS OF DE-ICING CABLE WITHIN GUTTERS ON THE FRONT AND REAR OF THE BUILDING. ELECTRICAL CONTRACTOR SHALL PROVIDE THE POWER TO EACH CABLE LENGTH, WIRING BETWEEN THE TWO CABLE LENGTHS AND WIRING TO A SPST SWITCH WITH PILOT LIGHT MOUNTED WITHIN THE UTILITY ROOM.

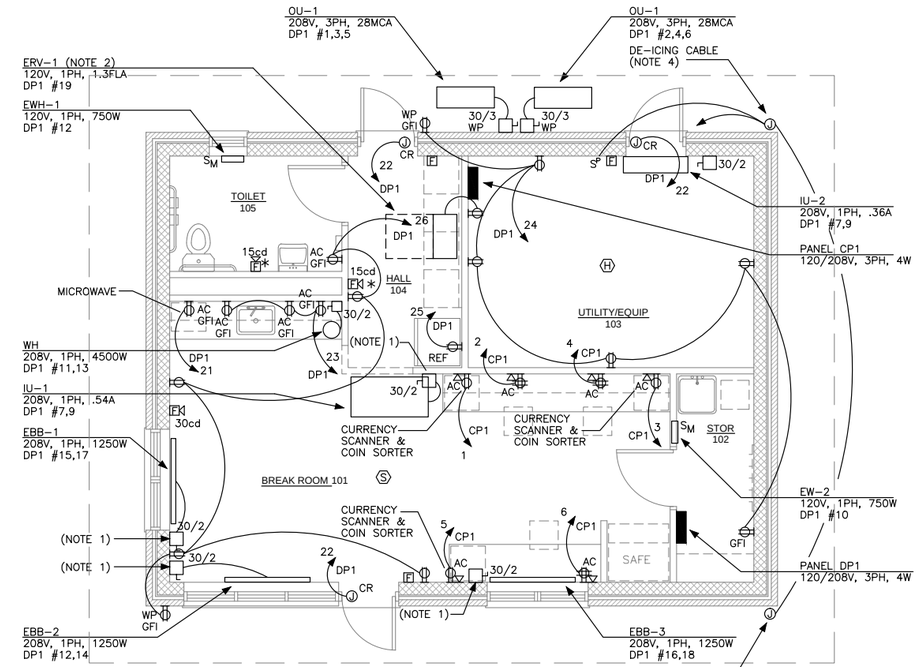

4 BUILDING POWER PLAN
1/4" = 1'-0"

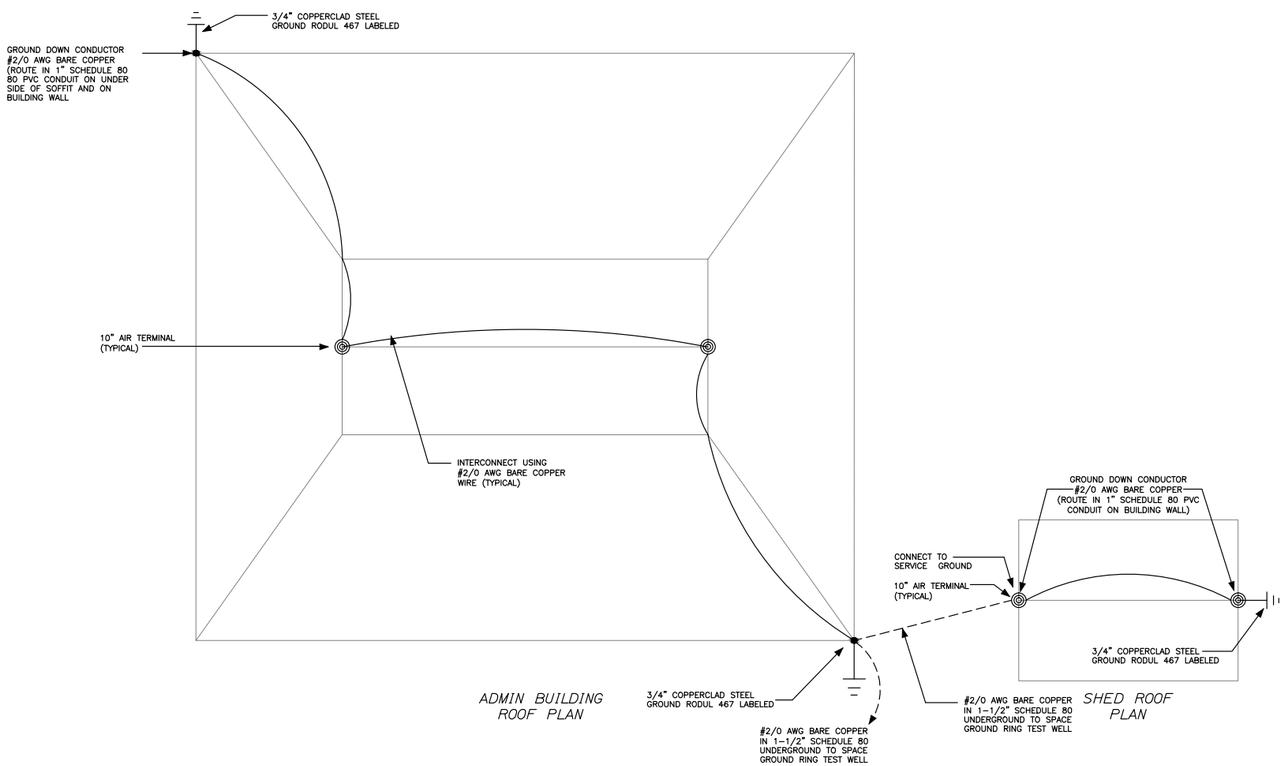

3 BUILDING LIGHTNING PROTECTION PLAN
1/4" = 1'-0"

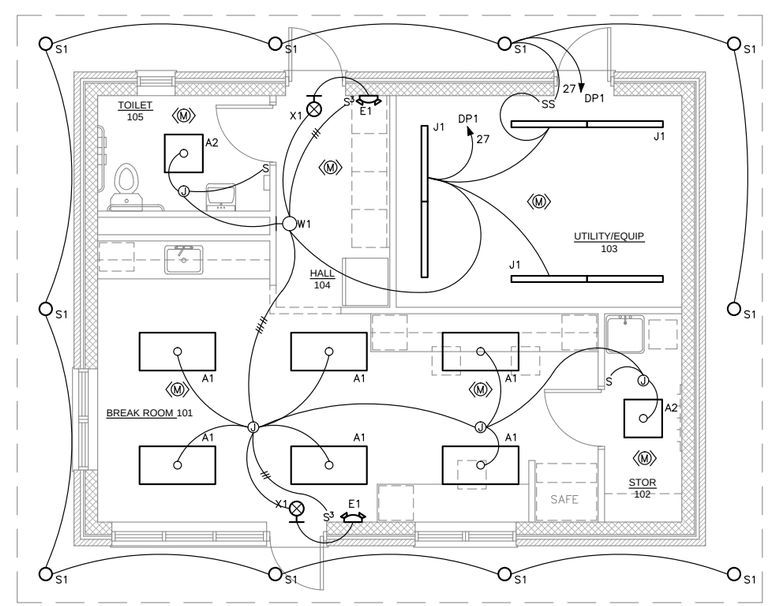

5 BUILDING LIGHTING PLAN
1/4" = 1'-0"

PRELIMINARY
NOT FOR CONSTRUCTION

Bartlett Design
LIGHTING & ELECTRICAL ENGINEERING
946 WASHINGTON STREET, BATH, ME 04530
TEL (207) 443-5447 FAX (207) 443-5850

GRANT HAYS ASSOCIATES
ARCHITECTURE & INTERIOR DESIGN
P.O. BOX 6179 FALMOUTH MAINE 04105
207.871.5900 www.granthays.com

SEAL
STATE OF MAINE
LAWRENCE E. BARTLETT
No. 7928
LICENSED
PROFESSIONAL ENGINEER

REVISIONS

PROJECT NAME
MAINE TURNPIKE TOLL
ADMININSTRATION BUILDING
MILE MAKER (MM) 53.0
WEST FALMOUTH MAINE 04105

SHEET
ADMIN BUILDING
LIGHTING &
POWER PLANS

DATE
30 JUNE 2015
SCALE
1/4" = 1'-0"
DRAWN
JLC
JOB NO.
150408
SHEET
E1

COPYRIGHT
REPRODUCTION OR REUSE OF THIS DOCUMENT WITHOUT WRITTEN PERMISSION FROM GRANT HAYS ASSOCIATES IS PROHIBITED.