CONTRACT DOCUMENTS

CONTRACT 2015.11

WEST GARDINER BARRIER TOLL PLAZA
OPEN ROAD TOLLING CONVERSION
(MM 100.2)

MAINE TURNPIKE AUTHORITY

SPECIFICATIONS

The Specifications are divided into two parts:
Part I, General Provisions and Part II, Special Provisions.

The Maine Turnpike General Provisions and Special Provisions are additions and alterations to the Maine Department of Transportation Standard Specifications **Revision of December 2002**.

TABLE OF CONTENTS

	PAGE
NOTICE TO CONTRACTORS	N-1
PROPOSAL	P-1
CONTRACT AGREEMENT	C-1
CONTRACT BOND	CB-1
FINAL LIEN AND CLAIM WAIVER AND AFFIDAVIT	F-1

ARRANGEMENT OF SPECIFICATIONS

PART I - GENERAL PROVISIONS	GP-1
PART II - SPECIAL PROVISIONS	SP-1
PART III - APPENDICES (Part of Special Provisions)	AP-1

PART I - GENERAL PROVISIONS

SECTION	TITLE	PAGE
100	GENERAL PROVISIONS	
100.1	REPLACEMENT OF FORMER STANDARD SPECIFICATIONS AND DETAILS	GP-1
101	CONTRACT INTERPRETATION	
101.2	DEFINITIONS	GP-1
102	BIDDING	
102.1.1	BASIC REQUIREMENTS	GP-2
102.6	BID GUARANTY	GP-3
102.7.1	LOCATION AND TIME	GP-3
102.7.2	EFFECTS OF SIGNING AND DELIVERY OF BIDS	GP-3

PART I - GENERAL PROVISIONS - Continued

SECTION	TITLE	PAGE
103	AWARD AND CONTRACTING	
103.3.1	NOTICE AND INFORMATION GATHERING	GP-3
103.3.2	NOTICE OF DETERMINATION	GP-3
103.3.3	APPEAL	GP-4
103.4	NOTICE OF AWARD	GP-4
103.5.4	EXECUTION OF CONTRACT BY BIDDER	GP-4
103.8	EXECUTION OF CONTRACT BY DEPARTMENT	GP-5
104	GENERAL RIGHTS AND RESPONSIBILITIES	
104.2.1	FURNISHING OF RIGHT-OF-WAY	GP-5
104.2.3	AUTHORITY OF PROJECT MANAGER AND RESIDENT	GP-5
104.3.5	DUTIES REGARDING INSPECTION OF WORK	GP-5
104.3.7	LAWS TO BE OBSERVED	GP-6
104.3.8	WAGE RATES AND LABOR LAWS	GP-6
104.3.11	RESPONSIBILITY FOR PROPERTY OF OTHERS	GP-7
104.3.14	INTERPRETATION AND INTERPOLATION	GP-7
104.4.2	PRECONSTRUCTION CONFERENCE	GP-7
104.4.5	EARLY NEGOTIATION	GP-8
104.4.7	COOPERATION WITH OTHER CONTRACTORS	GP-8
104.4.10	COORDINATION OF BRIDGE CLOSURE/BRIDGE WIDTH RESTRICTION NOTIFICATION	GP-9
104.5.9	LANDSCAPE SUBCONTRACTORS	GP-9
105	GENERAL SCOPE OF WORK	
105.1	INTENT OF THE CONTRACT	GP-9

SECTION	TITLE	PAGE
105.2.3	JOINT DUTY REGARDING SAFETY	GP-10
105.2.4.1	LOCKOUT/TAGOUT PROCEDURES	GP-10
105.4.1	MAINTENANCE DURING CONSTRUCTION	GP-10
105.4.3	MAINTENANCE DURING WINTER CONSTRUCTION	GP-11
105.5.1	GENERAL REQUIREMENTS	GP-11
105.6	CONSTRUCTION SURVEYING	GP-13
105.6.1	AUTHORITY PROVIDED SERVICES	GP-13
105.6.2	CONTRACTOR PROVIDED SERVICES	GP-13
105.6.2.1	QUALITY CONTROL	GP-13
105.6.3	QUALITY ASSURANCE	GP-13
105.6.4	BOUNDARY MARKERS	GP-14
105.7.1	GENERAL	GP-14
105.7.4	SUBMITTAL REQUIREMENTS	GP-15
105.8.1	TEMPORARY SOIL EROSION AND WATER POLLUTION CONTROL	GP-15
105.10	EQUAL OPPORTUNITY AND CIVIL RIGHTS	GP-16
105.10.1	REQUIREMENTS APPLICABLE TO FEDERALLY FUNDED CONTRACTS	GP-16
105.10.2	REQUIREMENTS APPLICABLE TO ALL CONTRACTS	GP-16
105.11	OTHER FEDERAL REQUIREMENTS	GP-17
105.12	LIMITATIONS OF OPERATIONS	GP-17
106	QUALITY	
106.3.3	SOURCES	GP-18
106.3.4	STORAGE	GP-18

SECTION	TITLE	PAGE
106.3.7	SAMPLING AND TESTING	GP-18
106.6	ACCEPTANCE	GP-18
106.8.3	UNAUTHORIZED WORK	GP-18
107	TIME	
107.1.1	SUBSTANTIAL COMPLETION	GP-19
107.3.1	GENERAL	GP-19
107.3.2	NIGHT WORK	GP-19
107.3.3	SUNDAYS AND HOLIDAYS	GP-20
107.4.2	SCHEDULE OF WORK REQUIRED	GP-20
107.4.4	SCHEDULE REVISIONS	GP-20
107.7.2	SCHEDULE OF LIQUIDATED DAMAGES	GP-20
107.9.1	FINAL CLEAN-UP AND FINISHING	GP-21
108	PAYMENT	
108.1	MEASUREMENT OF QUANTITIES FOR PAYMENT	GP-21
108.1.2	GENERAL MEASUREMENT PROVISIONS	GP-21
108.1.3	PROVISIONS RELATING TO CERTAIN MEASUREMENTS	GP-21
108.2.1	GENERATION OF PROGRESS PAYMENT ESTIMATES	GP-21
108.2.2	PAYMENT	GP-22
108.2.3	MOBILIZATION PAYMENTS	GP-22
108.3	RETAINAGE	GP-22
108.4	PAYMENT FOR MATERIALS OBTAINED AND STORED	GP-23
108.4.1	PRICE ADJUSTMENT FOR HOT MIX ASPHALT	GP-23
108.5	RIGHT TO WITHHOLD PAYMENT	GP-23

PART I - GENERAL PROVISIONS - Continued

SECTION	TITLE	PAGE
108.6	TAXES, FEES, ALLOWANCES, AND NOTICES	GP-24
108.8	FINAL PAYMENT	GP-24
109	CHANGES	
109.1.1	CHANGES PERMITTED	GP-24
109.1.2	SUBSTANTIAL CHANGES TO MAJOR ITEMS	GP-24
109.3	EXTRA WORK	GP-24
109.4	DIFFERING SITE CONDITIONS	GP-25
109.4.1	DEFINITION	GP-25
109.4.4	INVESTIGATION / ADJUSTMENT	GP-25
109.5.1	DEFINITIONS – TYPES OF DELAYS	GP-25
109.5.2	ENTITLEMENT TO ADJUSTMENTS	GP-25
109.5.5	DOCUMENTING THE DELAY AND REQUEST FOR ADJUSTMENTS	GP-26
109.5.6	DECISION BY PROGRAM MANAGER	GP-26
109.5.7	ADDITIONAL CONSIDERATION BY DEPARTMENT	GP-26
109.6.1	OVERVIEW – GENERAL REQUIREMENTS	GP-26
109.7.2	BASIS OF PAYMENT	GP-26
109.7.3	COMPENSABLE ITEMS	GP-26
109.7.5	FORCE ACCOUNT WORK	GP-27
110	INDEMNIFICATIONS, BONDING AND INSURANCE	
110.2.1	BONDS	GP-27
110.2.3	BONDING FOR LANDSCAPE SUBCONTRACTORS	GP-28
110.2.3	BONDING FOR LANDSCAPE ESTABLISHMENT PERIOD	GP-28

PART I - GENERAL PROVISIONS - Continued

SECTION	TITLE	PAGE
110.3	INSURANCE	GP-29
110.3.05	UMBRELLA LIABILITY	GP-29
110.3.2	COMMERCIAL GENERAL LIABILITY	GP-29
110.3.4	PROFESSIONAL LIABILITY	GP-29
110.3.5	OWNER'S AND CONTRACTOR'S PROTECTIVE LIABILITY	GP-30
110.3.6	BUILDER'S RISK INSURANCE	GP-30
110.3.8	ADMINISTRATIVE AND GENERAL PROVISIONS	GP-30
111	RESOLUTION OF DISPUTES	
111.1.2	ESCALATION PROCESS	GP-30
111.1.8	COMMISSIONER COMMUNICATIONS BEFORE APPEAL	GP-31
111.2	PROJECT LEVEL NEGOTIATION TO 111.6 JUDICIAL REVIEW	GP-31
112	DEFAULT AND TERMINATION	
112.2	TERMINATION	GP-31
203	EXCAVATION AND EMBANKMENT	
203.01	DESCRIPTION	GP-32
203.18	METHOD OF MEASUREMENT	GP-32
502	STRUCTURAL CONCRETE	
502.10	FORMS AND FALSE WORK	GP-32
502.11	PLACING CONCRETE	GP-32
502.15	CURING CONCRETE	GP-32
503	REINFORCING STEEL	
503.06	PLACING AND FASTENING	GP-33

SECTION	TITLE	PAGE
504	STRUCTURAL STEEL	
504.09	FACILITIES FOR INSPECTION	GP-33
504.18	PLATES FOR FABRICATED MEMBERS	GP-33
504.31	SHOP ASSEMBLY	GP-33
535	PRECAST, PRESTRESSED CONCRETE SUPERSTRUCTURE	
535.02	MATERIALS	GP-34
535.05	INSPECTION FACILITIES	GP-34
535.26	LATERAL POST-TENSIONING	GP-34
603	PIPE CULVERTS AND STORMDRAINS	
603.0311	CORRUGATED POLYETHYLENE PIPE FOR OPTION III	GP-34
604	MANHOLES, INLETS, AND CATCH BASINS	
604.02	MATERIALS	GP-34
605	UNDERDRAINS	
605.05	UNDERDRAIN OUTLETS	GP-35
606	GUARDRAIL	
606.02	MATERIALS	GP-35
606.09	BASIS OF PAYMENT	GP-35
615	LOAM	
615.02	MATERIALS	GP-35
618	SEEDING	
618.01	DESCRIPTION	GP-36
618.03	RATES OF APPLICATION	GP-36
618.09	CONSTRUCTION METHOD	GP-36

SECTION	TITLE	PAGE
618.15	TEMPORARY SEEDING	GP-36
620	GEOTEXTILES	
620.03	PLACEMENT	GP-36
620.07	SHIPMENT, STORAGE, PROTECTION AND REPAIR OF FABRIC	GP-36
620.09	BASIS OF PAYMENT	GP-36
621	LANDSCAPING	
621.0036	ESTABLISHMENT PERIOD	GP-37
626	HIGHWAY SIGNING	
626.034	CONCRETE FOUNDATIONS	GP-37
639	ENGINEERING FACILITIES	
639.04	FIELD OFFICES	GP-37
639.09	TELEPHONE	GP-37
639.11	BASIS OF PAYMENT	GP-38
652	MAINTENANCE OF TRAFFIC	
652.2	MATERIALS	GP-38
652.2.4	OTHER DEVICES	GP-38
652.2.5	SAFETY VESTS	GP-38
652.3.1	RESPONSIBILITY OF THE DEPARTMENT	GP-38
652.3.2	RESPONSIBILITY OF THE CONTRACTOR	GP-39
652.3.3	SUBMITTAL OF TRAFFIC CONTROL PLAN	GP-39
652.3.4	GENERAL	GP-39
652.3.41	LOCAL ROAD GENERAL REQUIREMENTS	GP-40

SECTION	TITLE	PAGE
652.3.5	INSTALLATION OF TRAFFIC CONTROL DEVICES	GP-41
652.3.6	TRAFFIC CONTROL	GP-42
652.41	TRAFFIC OFFICERS	GP-42
652.6	NIGHT WORK	GP-42
652.61	CONSTRUCTION VEHICLES	GP-42
652.7	METHOD OF MEASUREMENT	GP-42
652.8.2	OTHER ITEMS	GP-43
653	POLYSTYRENE PLASTIC INSULATION	
653.05	PLACING BACKFILL	GP-43
653.06	COMPACTION	GP-43
656	TEMPORARY SOIL EROSION AND WATER POLLUTION CONTROL	
656.01	DESCRIPTION	GP-43
656.02	GENERAL	GP-44
656.03	SILT FENCE	GP-44
656.04	TEMPORARY EROSION CHECKS	GP-45
656.041	EROSION CONTROL FILTER BERM	GP-45
656.05	TEMPORARY BERMS	GP-45
656.06	TEMPORARY SLOPE DRAINS	GP-45
656.07	DUMPED STONE	GP-45
656.08	SILT FENCE	GP-46
656.081	BOOM SUPPORTED FLOATING SILT FENCE	GP-46
656.082	MAINTENANCE	GP-46

SECTION	TITLE	PAGE
656.085	EROSION CONTROL COMPLIANCE OFFICER	GP-46
656.09	REMOVING AND DISPOSING	GP-47
656.10	METHOD OF MEASUREMENT	GP-47
656.11	BASIS OF PAYMENT	GP-47
701	STRUCTURAL CONCRETE RELATED MATERIALS	
701.10	FLY ASH – CHEMICAL REQUIREMENTS	GP-48
703	AGGREGATES	
703.06	AGGREGATE FOR BASE AND SUBBASE	GP-48
703.22	UNDERDRAIN BACKFILL MATERIAL	GP-49
706	NON-METALLIC PIPE	
706.06	CORRUGATED POLYETHYLENE PIPE FOR UNDERDRAIN, OPTION I AND OPTION II IN CULVERT PIPE	GP-49
709	REINFORCING STEEL AND WELDED STEEL WIRE FABRIC	
709.03	STEEL STRAND	GP-49
712	MISCELLANEOUS HIGHWAY MATERIALS	
712.07	TOPS AND TRAPS	GP-49
712.08	CORRUGATED METAL UNITS	GP-49
712.09	CATCH BASIN AND MANHOLE STEPS	GP-50
712.23	FLASHING LIGHTS	GP-50
712.32	COPPER TUBING	GP-51
712.33	NON-METALLIC PIPE, FLEXIBLE	GP-51
712.34	NON-METALLIC PIPE, RIGID	GP-51
712.341	METALLIC PIPE	GP-51

SECTION	TITLE	PAGE
712.35	EPOXY RESIN	GP-51
712.36	BITUMINOUS CURB	GP-52
712.37	PRECAST CONCRETE SLAB	GP-52
712.38	STONE SLAB	GP-52
717	ROADSIDE IMPROVEMENT MATERIAL	
717.03	C. METHOD #3 – ROADSIDE MIXTURE #3	GP-52
717.05	MULCH BINDER	GP-53

PART II - SPECIAL PROVISIONS

SECTION	TITLE	PAGE
__	GENERAL DESCRIPTION OF WORK	SP-1
__	PLANS	SP-1
101.2	DEFINITION	SP-1
102.11.2	CURABLE BID DEFECTS	SP-2
103.4	NOTICE OF AWARD	SP-2
104.3.8	WAGE RATES AND LABOR LAWS	SP-2
104.4.4	REQUEST FOR INFORMATION (RFI)	SP-5
104.4.6	UTILITY COORDINATION	SP-5
104.4.7	COOPERATION WITH OTHER CONTRACTORS	SP-5
105.2.4.2	LEAD PAINT	SP-6
105.2.4.3	UNIVERSAL WASTE	SP-9
105.3	TRAFFIC CONTROL AND MANAGEMENT	SP-9
105.4.3	MAINTENANCE DURING WINTER CONSTRUCTION	SP-9
105.5.1	GENERAL REQUIREMENTS	SP-9
105.7.4	SUBMITTAL REQUIREMENTS	SP-10
105.8.1	TEMPORARY SOIL EROSION AND WATER POLLUTION CONTROL	SP-10
105.8.1.1	ENVIRONMENTAL STANDARDS	SP-11
105.8.1.11	WATER POLLUTION CONTROL REQUIREMENTS	SP-12
105.8.1.12	CONSTRUCTION REQUIREMENTS	SP-13
105.8.2	PERMIT REQUIREMENTS	SP-14
105.8.3	WETLAND AND WATER BODY IMPACTS	SP-16
107.1	CONTRACT TIME AND CONTRACT COMPLETION DATE	SP-16

PART II – SPECIAL PROVISIONS - Continued

SECTION	TITLE	PAGE
107.1.1	SUBSTANTIAL COMPLETION	SP-16
107.4.2	SCHEDULE OF WORK REQUIRED	SP-17
107.4.6	PROSECUTION OF WORK	SP-17
107.4.7	LIMITATIONS OF OPERATIONS	SP-18
107.4.9	FAILURE TO STOP WORK WHEN DIRECTED	SP-19
107.6	COMPLETION INCENTIVE AND DISINCENTIVE	SP-19
107.7.2	SCHEDULE OF LIQUIDATED DAMAGES	SP-20
108.4	PAYMENT FOR MATERIALS OBTAINED AND STORED	SP-20
108.4.1	PRICE ADJUSTMENT FOR HOT MIX ASPHALT	SP-21
109.7.3	COMPENSABLE ITEMS	SP-22
202.	REMOVING STRUCTURES AND OBSTRUCTIONS (Removing Existing Manholes or Catch Basins)	SP-23
202.	REMOVING STRUCTURES AND OBSTRUCTIONS (Removing Existing Structural Concrete)	SP-24
202.	REMOVING STRUCTURES AND OBSTRUCTIONS (Removing Pavement Surface)	SP-25
203.	EXCAVATION AND EMBANKMENT	SP-26
203.	EXCAVATION AND EMBANKMENT (Common Borrow, Truck Measure)	SP-28
205.	SHOULDER RECONSTRUCTION (Widening of Existing Shoulder)	SP-29
206.	STRUCTURAL EXCAVATION	SP-31
401.	HOT MIX ASPHALT PAVEMENTS	SP-33
403.	HOT MIX ASPHALT PAVEMENT	SP-55
403.	HOT MIX ASPHALT PAVEMENT (Hot Mix Asphalt, 12.5 mm (Polymer Modified))	SP-57

PART II – SPECIAL PROVISIONS - Continued

SECTION	TITLE	PAGE
409.	BITUMINOUS TACK COAT	SP-59
419.	SAWING AND SEALING JOINTS IN BITUMINOUS PAVEMENT (Sawing Bituminous Pavement)	SP-60
424	ASPHALT RUBBER FIBER CRACK SEALER	SP-61
459	BITUMINOUS CONCRETE WATERWAY	SP-64
470	BERM DROPOFF CORRECTION (Grindings)	SP-66
502.	STRUCTURAL CONCRETE (Structural Concrete, Space Frame Pedestals) (Structural Concrete, Grade Beams and ORT Slabs) (Structural Concrete, Pavement Slabs) (Structural Concrete, Plaza Islands and Slab Infill Concrete) (Structural Concrete, Departure Slab)	SP-68
503.	REINFORCING STEEL (GRFP Reinforcing)	SP-100
503.	REINFORCING STEEL (Synthetic Fiber Reinforcement)	SP-104
504.	STRUCTURAL STEEL (Space Frame Canopy, Fabricated and Delivered) (Space Frame Canopy, Erected) (Steel Post Support System)	SP-105
504.	STRUCTURAL STEEL (Mounting Bracket Assemblies)	SP-110
506	FIELD COATING APPLICATION	SP-113
506	SHOP COATING APPLICATION	SP-129
508.	MEMBRANE WATERPROOFING	SP-137
511.	COFFERDAMS (Temporary Earth Support Systems)	SP-138
515.	PROTECTIVE COATING FOR CONCRETE SURFACES (Clear Concrete Protective Coating)	SP-143

PART II – SPECIAL PROVISIONS - Continued

SECTION	TITLE	PAGE
515.	PROTECTIVE COATING FOR CONCRETE SURFACES (Epoxy Overlay)	SP-146
518.	STRUCTURAL CONCRETE REPAIR (Concrete Slab Crack Repairs) (Partial Depth Concrete Slab Repairs Type I) (Partial Depth Concrete Slab Repairs Type II) (Full Depth Concrete Slab Repairs)	SP-152
526.	CONCRETE BARRIER (Temporary Concrete Barrier Type I - Supplied by Authority)	SP-159
526.	CONCRETE BARRIER (Median Barrier Type I, IA, IB, IC, II, III) (Median Barrier Transition Type I, II)	SP-163
527.	ENERGY ABSORBING UNIT (Energy Absorbing System (CAT) – Remove and Stack)	SP-167
527.	ENERGY ABSORBING UNIT (Center Barrier Crash Attenuator (FasTRACC))	SP-168
527.	ENERGY ABSORBING UNIT (Work Zone Crash Cushion)	SP-169
602.	PIPE LINING (Flowable Concrete Fill)	SP-170
603.	PIPE CULVERTS AND STORM DRAINS (Reinforced Concrete Pipe) (Concrete Collar)	SP-174
604	MANHOLES, INLETS AND CATCH BASINS (Catch Basin)	SP-175
604	MANHOLES, INLETS AND CATCH BASINS (Rebuild Catch Basin to Grade - Type II) (Rebuild Catch Basin to Grade - Type IV)	SP-176
606.	GUARDRAIL (Bridge Transition – Type III) (Bridge Transition – Type III, Modified)	SP-179
606.	GUARDRAIL (Guardrail Beam)	SP-180

PART II – SPECIAL PROVISIONS - Continued

SECTION	TITLE	PAGE
606.	GUARDRAIL (Terminal End – Anchored End)	SP-181
606.	GUARDRAIL (Delineator Post) (Remove and Reset Delineator Post)	SP-183
606.	GUARDRAIL (Guardrail – Remove, Modify and Reset)	SP-186
606.	GUARDRAIL (Guardrail – Remove, Stack and Dispose)	SP-188
606.	GUARDRAIL (Single Offset Block)	SP-190
606.	GUARDRAIL (Asymmetrical Thrie Beam Transition)	SP-192
606.	GUARDRAIL (Widen Shoulders for Guardrail 350 Flared Terminal)	SP-193
606.	GUARDRAIL (Guardrail 350 FLEAT Terminal)	SP-195
607.	FENCES (Chain Link Fence – 3’ High) (Post Assemblies for Chain Link Fence – 3’ High)	SP-197
609.	CURBING (Concrete Curb Type 2)	SP-199
610.	STONE FILL, RIPRAP, STONE BLANKET AND STONE DITCH PROTECTION (Stone Check Dams)	SP-200
619.	MULCH	SP-202
626.	FOUNDATIONS, CONDUIT AND JUNCTION BOXES FOR HIGHWAY SIGNING, LIGHTING AND SIGNALS (18-Inch Diameter Drilled Shaft) (36-Inch Diameter Drilled Shaft) (36-Inch Diameter Drilled Shaft – Rock Socket)	SP-204

PART II – SPECIAL PROVISIONS - Continued

SECTION	TITLE	PAGE
627.	PAVEMENT MARKINGS (Painted Pavement Markings)	SP-217
627.	PAVEMENT MARKINGS (Temporary Raised Pavement Markers)	SP-219
631.	EQUIPMENT RENTAL	SP-221
634.	HIGHWAY LIGHTING (Replacement LED Fixture) (Remove and Reset Light Standard)	SP-223
639.	ENGINEERING FACILITIES (Field Office, Type B)	SP-226
643	TRAFFIC SIGNALS (Lane use Signal Modification)	SP-227
645.	HIGHWAY SIGNING (Remove and Stack Sign)	SP-228
645.	HIGHWAY SIGNING (Remove and Stack Canopy Mounted Sign)	SP-229
645.	HIGHWAY SIGNING (Overhead Guide Sign) (Cantilever Guide Sign) (Bridge Overpass-Mounted Mainline Sign)	SP-230
645.	HIGHWAY SIGNING (Variable Speed Limit Sign)	SP-232
645.	HIGHWAY SIGNING (Remove and Reset Mainline Sign)	SP-233
652.	MAINTENANCE OF TRAFFIC (General)	SP-235
652.	MAINTENANCE OF TRAFFIC (Specific Project Maintenance of Traffic Requirements)	SP-238

SECTION	TITLE	PAGE
652.	MAINTENANCE OF TRAFFIC (Temporary Mainline Lane Closures) (Lane Closure Installation and Removal Procedures) (Temporary Mainline Shoulder Closures) (Work Requiring Complete Stoppages of Traffic) (Short-Term or Work Hour Speed)	SP-241
652.	MAINTENANCE OF TRAFFIC (Flashing Beacon (Solar Powered))	SP-246
652.	MAINTENANCE OF TRAFFIC (Portable Changeable Message Sign)	SP-248
652.	MAINTENANCE OF TRAFFIC (Truck Mounted Attenuator)	SP-250
655.	ELECTRICAL WORK	SP-252
655.	ELECTRICAL (Concrete Encased Conduit)	SP-291
655.	ELECTRICAL (Lightning Suppression System)	SP-293
655.	ELECTRICAL (Space Frame Lighting)	SP-296
655.	ELECTRICAL (LED Replacement Canopy Light Fixture)	SP-298
656.	TEMPORARY SOIL EROSION AND WATER POLLUTION CONTROL	SP-299
719.	SIGNING MATERIAL	SP-305
800.	MISCELLANEOUS INCIDENTALS (Electrical Demolition)	SP-306
800.	MISCELLANEOUS INCIDENTALS (Mechanical Demolition)	SP-308
800.	MISCELLANEOUS INCIDENTALS (Toll Plaza Facility Demolition and Restoration)	SP-309

PART III – APPENDICES

SECTION	TITLE	PAGE
APPENDIX A -	PERMITS	AP - A1
APPENDIX B -	LEAD PAINT ASSESSMENT	AP - B1
APPENDIX C -	PLAZA SAFETY REQUIREMENTS	AP - C1
APPENDIX D -	DEFINED TERMS	AP - D1
APPENDIX E -	PLAZA WORK CHECKLIST	AP – E1
APPENDIX F -	PRODUCT DATA SHEETS	AP – F1
APPENDIX G -	SIGN DETAILS	AP – G1
APPENDIX H -	SUSPENDED CEILING TIE WIRE REPLACEMENT DETAILS	AP – H1
APPENDIX I -	REBAR SCHEDULE FOR PAVEMENT SLABS	AP – I1

MAINE TURNPIKE AUTHORITY

MAINE TURNPIKE

CONTRACT DOCUMENTS

CONTRACT 2015.11

WEST GARDINER BARRIER TOLL PLAZA
OPEN ROAD TOLLING CONVERSION
(MM 100.2)

NOTICE TO CONTACTORS

PROPOSAL

CONTRACT AGREEMENT

CONTRACT BOND

FINAL LIEN AND CLAIM WAIVER AND AFFIDAVIT

SPECIFICATIONS

MAINE TURNPIKE AUTHORITY

NOTICE TO CONTRACTORS

Sealed Proposals will be received by the Maine Turnpike Authority for:

CONTRACT 2015.11

WEST GARDINER BARRIER TOLL PLAZA
OPEN ROAD TOLLING CONVERSION
(MM 100.2)

at the office of the Maine Turnpike Authority, 2360 Congress Street, Portland, ME, until 11:00 a.m., prevailing time as determined by the Authority on March 19, 2015 at which time and place the Proposals will be publicly opened and read. Bids will be accepted from Contractors **prequalified** by the Maine Department of Transportation for Highway and Bridge Construction Projects with an electrical subcontractor **prequalified** by the Maine Department of Transportation for Traffic Signals and Lighting Projects. All other bids may be rejected. This Project includes a wage determination developed by the State of Maine Department of Labor.

The work consists of removing four interior toll lanes and constructing one northbound and one southbound open road tolling (ORT) lane along with installation of infrastructure and select portions of toll equipment in support of the toll system for the ORT lanes for the Maine Turnpike Authority. The work also consists of tolling equipment and infrastructure upgrades in support of the toll system for the cash lanes for the Maine Turnpike Authority.

The work includes earthwork, pavement, concrete, toll plaza demolition and modification, concrete drilled shafts and rocker sockets, signing, bridge overpass-mounted, overhead and cantilever sign structures, concrete barrier, guardrail, electrical work, lighting and lightning suppression systems. The work also includes the demolition and replacement of the six inch pavement slab in lanes 1, 2, 7 and 8 and portions of the 12 inch island slabs, repair of the exposed 12 inch structural slab, demolition and installation of tolling equipment in the tunnel, canopy, and toll booth, maintenance of traffic and all other work incidental thereto in accordance with the Plans and Specifications.

The general limits of work are from Mile 98.1 (Station 5004+00) to Mile 102.4 (Station 5231+00) in West Gardiner.

Plans and Contract documents may be examined by prospective bidders weekdays between 8:00 a.m. and 4:30 p.m. at the office of the Maine Turnpike Authority, 2360 Congress Street, Portland, Maine. The full size plans and Contract documents may be obtained from the Authority upon payment of One Hundred and Sixty-Five ($165.00) dollars for each set, which payment will not be returned. The half size plans and Contract documents may be obtained from the Authority upon payment of One Hundred and Ten ($110.00) dollars for each set, which payment will not be returned. Checks shall be made payable to: Maine Turnpike Authority. The plans, geotechnical report and Contract documents may also be downloaded from a link on our website at http://www.maineturnpike.com/project-and-planning/Construction-Contracts.aspx.

For general information regarding Bidding and Contracting procedures, contact Nate Carll, Purchasing Manager, at (207) 871-7771 Ext. 115. For information regarding Schedule of Items, plan holders list and bid results, visit our website at http://www.maineturnpike.com/project-and-planning/Construction-Contracts.aspx . For Project specific information, fax all questions to Nate Carll, Purchasing Manager, at (207) 871-7739. Responses will not be prepared for questions received by telephone. Bidders shall not contact any other Authority staff or Consultants for clarification of Contract provisions, and the Authority will not be responsible for any interpretations so obtained.

All work shall be governed by the Specifications entitled "State of Maine, Department of Transportation, Standard Specifications, **Revision of December 2002**", "Standard Details, **Revision of December 2002**" and "Best Management Practices for Erosion and Sediment Control", latest issue. Copies and recent updates to these publications can be downloaded at: http://www.maine.gov/mdot/contractors/publications/.

Proposals must be accompanied by an original bid bond, certified or cashier's check payable to the Maine Turnpike Authority in an amount not less than Five (5%) Percent of the Total Amount in the Proposal, but not less than $500.00. The Bidder to whom a Contract is awarded will be required to furnish a Surety Corporation Bond, satisfactory to the Authority, on the standard Contract Bond form of the Authority, for a sum not less than the Total Amount of the Proposal.

Proposals must be made upon the Proposal Forms furnished by the Authority separately with the Contract Documents, and must be enclosed in the sealed special addressed envelope provided therefore bearing the name and address of the Bidder, the name of the Contract, and the date and time of Proposal opening on the outside.

A pre-bid conference will be held on March 03, 2015 at 10:00 a.m. at the Maine Turnpike Authority, 2360 Congress Street, Portland, Maine.

The Authority reserves the unqualified right to reject any or all Proposals and to accept that Proposal which in its sole judgment will under all circumstances serve its best interest.

MAINE TURNPIKE AUTHORITY

_____

Nate Carll
Purchasing Manager
Maine Turnpike Authority

Portland, Maine

Maine Turnpike Authority

MAINE TURNPIKE

PROPOSAL

CONTRACT 2015.11

WEST GARDINER BARRIER TOLL PLAZA
OPEN ROAD TOLLING CONVERSION
(MM 100.2)

MAINE TURNPIKE AUTHORITY

PROPOSAL

CONTRACT 2015.11

WEST GARDINER BARRIER TOLL PLAZA
OPEN ROAD TOLLING CONVERSION
(MM 100.2)

TO MAINE TURNPIKE AUTHORITY:

The work consists of removing four interior toll lanes and constructing one northbound and one southbound ORT lane along with installation of infrastructure and select portions of toll equipment in support of the toll system for the ORT lanes for the Maine Turnpike Authority. The work also consists of tolling equipment and infrastructure upgrades in support of the toll system for the cash lanes for the Maine Turnpike Authority.

The work includes earthwork, pavement, concrete, toll plaza demolition and modification, concrete drilled shafts and rocker sockets, signing, bridge overpass-mounted, overhead and cantilever sign structures, concrete barrier, guardrail, electrical work, lighting and lightning suppression systems. The work also includes the demolition and replacement of the six inch pavement slab in lanes 1, 2, 7 and 8 and portions of the 12 inch island slabs, repair of the exposed 12 inch structural slab, demolition and installation of tolling equipment in the tunnel, canopy, and toll booth, maintenance of traffic and all other work incidental thereto in accordance with the Plans and Specifications.

The general limits of work are from Mile 98.1 (Station 5004+00) to Mile 102.4 (Station 5231+00) in West Gardiner.

This Work will be done under a Contract known as Contract 2015.11 according to the Plans and Specifications which are on file in the office of the Maine Turnpike Authority, 2360 Congress Street, Portland, Maine.

On the acceptance of this Proposal for said Work, the undersigned will give the required bond with good security conditioned for the faithful performance of said Work, according to said Plans and Specifications, and the doing of all other work required by said Specifications for the consideration herein named and with the further condition that the Maine Turnpike Authority shall be saved harmless from any and all damages that might accrue to any person, persons or property by reason of the carrying out of said Work, or any part thereof, or by reason of negligence of the undersigned, or any person or persons under his employment and engaged in said Work.

The undersigned hereby declares that he/she has carefully examined the Plans, Specifications and other Contract Documents, and that he/she will contract to carry out and complete the said Work as specified and delineated at the price per unit of measure for each scheduled item of Work stated in the Schedule of Prices as follows:

It is understood that the TOTAL AMOUNT stated by the undersigned in the following Schedule of Prices is based on approximate quantities and will be used solely for the comparison of bids, and that the quantities stated in the Schedule of Prices for the various items are estimates only and may be increased or decreased all as provided in the Specifications.

SCHEDULE OF BID PRICES
CONTRACT NO. 2015.11
WEST GARDINER BARRIER TOLL PLAZA
OPEN ROAD TOLLING CONVERSION
MILE MARKER 100.2

Item No	Item Description	Units	Approx. Quantities	Unit Prices in Numbers		Bid Amount in Numbers	
				Dollars	Cents	Dollars	Cents
202.15	Removing Existing Manhole or Catch Basin	Each	6				
202.17	Removing Existing Structural Concrete	Lump Sum	1				
202.202	Removing Pavement Surface	Square Yard	9,500				
203.20	Common Excavation	Cubic Yard	3,500				
203.241	Common Borrow, Truck Measure	Cubic Yard	3,550				
203.25	Granular Borrow	Cubic Yard	350				
205.51	Widening of Existing Shoulder, Plan Quantity	Linear Foot	2,000				
206.08	Structural Earth Excavation – Major Structures	Cubic Yard	141				
304.09	Aggregate Base Course - Crushed	Cubic Yard	1,220				
304.10	Aggregate Subbase Course - Gravel	Cubic Yard	1,350				
403.207	Hot Mix Asphalt, 19.0 mm Nominal Maximum Size	Ton	2,700				

CARRIED FORWARD:

Item No	Item Description	Units	Approx. Quantities	Unit Prices in Numbers		Bid Amount in Numbers	
				Dollars	Cents	Dollars	Cents
			BROUGHT FORWARD:				
403.208	Hot Mix Asphalt, 12.5 mm Nominal Maximum Size, Surface	Ton	140				
403.2083	Hot Mix Asphalt, 12.5 mm (Polymer Modified)	Ton	1,450				
403.209	Hot Mix Asphalt, 9.5 mm Nominal Maximum Size (sidewalks, drives, islands & incidentals)	Ton	500				
403.211	Hot Mix Asphalt (shimming)	Ton	280				
403.213	Hot Mix Asphalt, 12.5 mm Nominal Maximum Size, Base	Ton	930				
409.15	Bituminous Tack Coat, Applied	Gallon	2,750				
419.30	Sawing Bituminous Pavement	Linear Foot	4,000				
424.323	Asphalt Rubber Fiber Crack Sealer - Applied	Pound	950				
459.061	Bituminous Concrete Waterway, Type II	Each	2				
470.081	Berm Dropoff Correction – Grindings, Non-Guardrail Areas	Ton	3,600				
502.231	Structural Concrete, Space Frame Pedestals	Cubic Yard	30				
502.261	Structural Concrete, Grade Beams and ORT Slabs	Cubic Yard	205				

CARRIED FORWARD:

Item No	Item Description	Units	Approx. Quantities	Unit Prices in Numbers		Bid Amount in Numbers	
				Dollars	Cents	Dollars	Cents
			BROUGHT FORWARD:				
502.262	Structural Concrete, Pavement Slabs	Cubic Yard	175				
502.263	Structural Concrete, Plaza Islands and Slab Infill Concrete	Cubic Yard	93				
502.264	Structural Concrete, Departure Slab	Cubic Yard	46				
503.14	Epoxy-Coated Reinforcing Steel, Fabricated and Delivered	Pound	19,200				
503.15	Epoxy-Coated Reinforcing Steel, Placing	Pound	19,200				
503.18	Glass Fiber Reinforced Polymer (GFRP) Reinforcing Bars, Fabricated and Delivered	Pound	42,600				
503.19	Glass Fiber Reinforced Polymer (GFRP) Reinforcing Bars, Placing	Pound	42,600				
503.90	Synthetic Fiber Reinforcement	Pound	1,100				
504.80	Space Frame Canopy, Fabricated and Delivered	Lump Sum	1				
504.81	Space Frame Canopy, Erection	Lump Sum	1				
504.90	Steel Post Support System	Lump Sum	1				
504.91	Mounting Bracket Assemblies	Lump Sum	1				

CARRIED FORWARD:

Item No	Item Description	Units	Approx. Quantities	Unit Prices in Numbers		Bid Amount in Numbers	
				Dollars	Cents	Dollars	Cents
			BROUGHT FORWARD:				
506.14	Field Painting of Existing Steel – Canopy Supports	Lump Sum	1				
506.15	Shop Coating of New Steel	Lump Sum	1				
506.17	Surface Preparation of Existing Steel – Canopy Supports	Lump Sum	1				
506.18	Containment System and Pollution Control Measures	Lump Sum	1				
506.191	Disposal of Hazardous or Toxic Material	Lump Sum	1				
508.14	High Performance Waterproofing Membrane	Lump Sum	1				
511.091	Temporary Earth Support Systems	Lump Sum	1				
515.202	Clear Protective Coating for Concrete Surfaces	Square Yard	1,450				
515.23	Epoxy Overlay	Square Yard	115				
518.64	Concrete Slab Crack Repairs	Linear Foot	100				
518.81	Partial Depth Concrete Slab Repairs Type I	Square Foot	2,400				
518.82	Partial Depth Concrete Slab Repairs Type II	Square Foot	1,300				

CARRIED FORWARD:

Item No	Item Description	Units	Approx. Quantities	Unit Prices in Numbers		Bid Amount in Numbers	
				Dollars	Cents	Dollars	Cents
			BROUGHT FORWARD:				
518.83	Full Depth Concrete Slab Repairs	Square Foot	250				
526.306	Temporary Concrete Barrier Type I - Supplied by Authority	Lump Sum	1				
526.351	Median Barrier Type I - Precast	Linear Foot	930				
526.3511	Median Barrier Type IA - Precast	Linear Foot	1,350				
526.3512	Median Barrier Type IB - Precast	Linear Foot	126				
526.3513	Median Barrier Type IC - Cast-in-Place	Linear Foot	40				
526.352	Median Barrier Type II - Cast-in-Place	Linear Foot	200				
526.353	Median Barrier Type III - Precast	Linear Foot	174				
526.361	Median Barrier Transition Type I - Precast	Each	4				
526.362	Median Barrier Transition Type II - Precast	Each	2				
527.305	Energy Absorbing System (CAT) - Remove and Stack	Each	2				
527.306	Center Barrier Crash Attenuator (FasTRACC)	Each	2				

CARRIED FORWARD:

Item No	Item Description	Units	Approx. Quantities	Unit Prices in Numbers		Bid Amount in Numbers	
				Dollars	Cents	Dollars	Cents
				BROUGHT FORWARD:			
527.341	Work Zone Crash Cushions - TL-3	Unit	6				
602.30	Flowable Concrete Fill	Cubic Yard	5				
603.155	12 inch Reinforced Concrete Pipe - Class III	Linear Foot	710				
603.165	15 inch Reinforced Concrete Pipe - Class III	Linear Foot	330				
603.175	18 inch Reinforced Concrete Pipe - Class III	Linear Foot	400				
603.195	24 inch Reinforced Concrete Pipe - Class III	Linear Foot	24				
603.28	Concrete Collar for Reinforced Concrete Pipe	Each	4				
604.09	Catch Basin Type B1	Each	29.8				
604.18	Adjusting Manhole or Catch Basin to Grade	Each	3				
604.184	Rebuild Catch Basin to Grade - Type II	Each	2				
604.186	Rebuild Catch Basin to Grade - Type IV	Each	1				
604.26	Catch Basin Type B5	Each	2.4				

CARRIED FORWARD:

Item No	Item Description	Units	Approx. Quantities	Unit Prices in Numbers		Bid Amount in Numbers	
				Dollars	Cents	Dollars	Cents
			BROUGHT FORWARD:				
606.1723	Bridge Transition - Type III	Each	2				
606.1724	Bridge Transition - Type III, Modified	Each	2				
606.178	Guardrail Beam	Linear Foot	50				
606.24	Guardrail Type 3d - Single Rail	Linear Foot	925				
606.2401	Guardrail Type 3d - Double Rail	Linear Foot	50				
606.278	Terminal End - Anchored End	Each	6				
606.353	Delineator Post	Each	40				
606.354	Delineator Post - Remove and Reset	Each	10				
606.3606	Guardrail - Remove, Modify and Reset, Double Rail	Linear Foot	150				
606.3631	Guardrail - Remove, Stack and Dispose	Linear Foot	150				
606.471	Single Offset Block - W-Beam	Each	50				
606.48	Single Galvanized Steel Post	Each	10				

CARRIED FORWARD:

Item No	Item Description	Units	Approx. Quantities	Unit Prices in Numbers		Bid Amount in Numbers	
				Dollars	Cents	Dollars	Cents
			BROUGHT FORWARD:				
606.65	Guardrail Thrie Beam - Single Rail	Linear Foot	900				
606.66	Terminal End Thrie Beam	Each	2				
606.701	Asymmetrical Thrie Beam Transition	Each	2				
606.754	Widen Shoulder for Guardrail 350 Flared Terminal	Each	4				
606.80	Guardrail 350 FLEAT Terminal	Each	4				
607.40	Chain Link Fence - 3' High	Linear Foot	400				
607.41	Post Assembly for Sign or Chain Link Fence	Each	56				
609.191	Concrete Curb Type 2	Linear Foot	48				
610.08	Plain Riprap	Cubic Yard	10				
610.181	Temporary Stone Check Dam	Cubic Yard	10				
613.319	Erosion Control Blanket	Square Yard	3,600				
615.07	Loam	Cubic Yard	620				

CARRIED FORWARD:

Item No	Item Description	Units	Approx. Quantities	Unit Prices in Numbers		Bid Amount in Numbers	
				Dollars	Cents	Dollars	Cents
			BROUGHT FORWARD:				
618.1411	Seeding Method Number 3, Plan Quantity	Unit	51				
619.1201	Mulch, Plan Quantity	Unit	51				
619.1202	Temporary Mulch	Lump Sum	1				
620.58	Erosion Control Geotextile	Square Yard	20				
626.11	Precast Concrete Junction Box	Each	12				
626.31	18 Inch Foundation	Each	2				
626.311	18-Inch Diameter Drilled Shaft	Linear Foot	78				
626.32	24 Inch Foundation	Each	24				
626.3321	36-Inch Diameter Drilled Shaft	Linear Foot	126				
626.3322	36-Inch Diameter Drilled Shaft - Rock Socket	Linear Foot	48				
627.681	Temporary 6 Inch Painted Pavement Marking Line - Yellow or White	Linear Foot	10,800				
627.77	Removing Existing Pavement Marking	Square Foot	5,700				

CARRIED FORWARD:

Item No	Item Description	Units	Approx. Quantities	Unit Prices in Numbers		Bid Amount in Numbers	
				Dollars	Cents	Dollars	Cents
			BROUGHT FORWARD:				
627.812	Temporary Raised Pavement Markers	Each	410				
629.05	Hand Labor, Straight Time	Hour	160				
631.10	Air Compressor (including operator)	Hour	100				
631.11	Air Tool (including operator)	Hour	100				
631.12	All Purpose Excavator (including operator)	Hour	80				
631.171	Truck - small (including operator)	Hour	80				
631.32	Culvert Cleaner (including operators)	Hour	10				
631.36	Foreman	Hour	100				
631.50	Jackhammer (air tool including operator)	Hour	160				
631.51	Bucket Truck	Hour	160				
631.52	Scissor Lift	Hour	160				
631.53	Electrician	Hour	200				

CARRIED FORWARD:

Item No	Item Description	Units	Approx. Quantities	Unit Prices in Numbers		Bid Amount in Numbers	
				Dollars	Cents	Dollars	Cents
			BROUGHT FORWARD:				
631.54	Electrician's Apprentice	Hour	200				
634.175	Replacement LED Fixture	Each	11				
634.208	Remove and Reset Light Standard	Each	12				
639.191	Field Office, Type B	Each	1				
643.711	Lane Use Signal Modification	Each	4				
645.105	Remove and Stack Sign	Each	69				
645.107	Remove and Stack Canopy Mounted Sign	Each	4				
645.121	Overhead Guide Sign: (Sta. 5107+00)	Lump Sum	1				
645.122	Overhead Guide Sign: (Sta. 5125+00)	Lump Sum	1				
645.131	Bridge Overpass-Mounted Guide Sign: (Sta. 5057+18)	Lump Sum	1				
645.1311	Bridge Overpass-Mounted Guide Sign: (Sta. 5057+18)	Lump Sum	1				
645.132	Bridge Overpass-Mounted Guide Sign: (Sta. 5195+84)	Lump Sum	1				

CARRIED FORWARD:

Item No	Item Description	Units	Approx. Quantities	Unit Prices in Numbers		Bid Amount in Numbers	
				Dollars	Cents	Dollars	Cents
			BROUGHT FORWARD:				
645.1321	Bridge Overpass-Mounted Guide Sign: (Sta. 5195+84)	Lump Sum	1				
645.151	Cantilever Guide Sign: (Sta. 5080+50)	Lump Sum	1				
645.152	Cantilever Guide Sign: (Sta. 5097+75)	Lump Sum	1				
645.153	Cantilever Guide Sign: (Sta. 5134+00)	Lump Sum	1				
645.154	Cantilever Guide Sign: (Sta. 5152+00)	Lump Sum	1				
645.155	Variable Speed Limit Sign	Each	2				
645.161	Breakaway Device Single Pole	Each	2				
645.162	Breakaway Device Multi Pole	Each	6				
645.251	Roadside Guide Signs, Type I	Square Foot	450				
645.271	Regulatory, Warning, Confirmation and Route Assembly Sign, Type I	Square Foot	420				
645.289	Steel H-Beam Poles	Pound	4,200				
645.501	Remove and Reset Mainline Sign No. 1	Lump Sum	1				

CARRIED FORWARD:

Item No	Item Description	Units	Approx. Quantities	Unit Prices in Numbers		Bid Amount in Numbers	
				Dollars	Cents	Dollars	Cents
			BROUGHT FORWARD:				
645.502	Remove and Reset Mainline Sign No. 2	Lump Sum	1				
645.503	Remove and Reset Mainline Sign No. 3	Lump Sum	1				
645.504	Remove and Reset Mainline Sign No. 4	Lump Sum	1				
645.505	Remove and Reset Mainline Sign No. 5	Lump Sum	1				
645.506	Remove and Reset Mainline Sign No. 6	Lump Sum	1				
645.507	Remove and Reset Mainline Sign No. 7	Lump Sum	1				
652.30	Flashing Arrow	Each	4				
652.301	Flashing Beacon - Solar Powered	Each	2				
652.312	Type III Barricades	Each	12				
652.33	Drum	Each	470				
652.34	Cone	Each	50				
652.35	Construction Signs	Square Foot	2,100				

CARRIED FORWARD:

Item No	Item Description	Units	Approx. Quantities	Unit Prices in Numbers		Bid Amount in Numbers	
				Dollars	Cents	Dollars	Cents
				BROUGHT FORWARD:			
652.361	Maintenance of Traffic Control Devices	Lump Sum	1				
652.38	Flaggers	Hour	80				
652.41	Portable-Changeable Message Sign	Each	2				
652.45	Truck Mounted Attenuator	Calendar Day	60	125	00	7,500	00
655.01	Installation of ORT Controller Cabinet	Each	2				
655.012	Installation of Cash Lane Controller Cabinet	Each	4				
655.02	DVAS Mount Installation	Each	8				
655.03	VCARS Mount Installation	Each	12				
655.04	Installation of Sensor Loops	Lump Sum	1				
655.05	Installation of AVI Antennas	Each	10				
655.06	Installation of AVI Readers	Each	2				
655.07	Traffic Control Pedestal Preparation Work	Each	4				

CARRIED FORWARD:

Item No	Item Description	Units	Approx. Quantities	Unit Prices in Numbers		Bid Amount in Numbers	
				Dollars	Cents	Dollars	Cents
			BROUGHT FORWARD:				
655.08	#2/0 Wire for UPS re-wiring	Linear Foot	200				
655.09	Armor Cable - 10/3	Linear Foot	300				
655.10	#4 AWG Wire	Linear Foot	450				
655.101	#6 AWG Wire	Linear Foot	7,100				
655.11	#10 AWG Wire	Linear Foot	2,600				
655.12	#12 AWG Wire	Linear Foot	15,900				
655.13	#14 AWG Wire	Linear Foot	6,000				
655.14	4pr/24 (Category 5e) Cable	Linear Foot	15,700				
655.15	LMR 400 Cable	Linear Foot	1,100				
655.16	Fiber Optic Cable – 6 Fiber	Linear Foot	2,700				
655.17	IVIS Homerun Loop Cable (IMSA 50-2 #16)	Linear Foot	4,200				
655.18	Half Diamond Loop Wire (#16 XHHW or XLP Stranded Wire)	Linear Foot	400				

CARRIED FORWARD:

Item No	Item Description	Units	Approx. Quantities	Unit Prices in Numbers		Bid Amount in Numbers	
				Dollars	Cents	Dollars	Cents
				BROUGHT FORWARD:			
655.200	1 1/2" Schedule 40 PVC Conduit	Linear Foot	100				
655.201	3" Schedule 40 PVC Conduit	Linear Foot	100				
655.202	4" Schedule 40 PVC Conduit	Linear Foot	50				
655.2021	1" Schedule 80 PVC Conduit	Linear Foot	100				
655.203	1 1/2" Schedule 80 PVC Conduit	Linear Foot	950				
655.2031	2" Schedule 80 PVC Conduit	Linear Foot	2,500				
655.204	3" Schedule 80 PVC Conduit	Linear Foot	1,750				
655.205	4" Schedule 80 PVC Conduit	Linear Foot	190				
655.206	1" Galvanized Rigid Metal Conduit	Linear Foot	470				
655.2061	3/4" Galvanized Rigid Metal Conduit	Linear Foot	100				
655.207	1 1/2" Galvanized Rigid Metal Conduit	Linear Foot	350				
655.208	3" Galvanized Rigid Metal Conduit	Linear Foot	550				

CARRIED FORWARD:

Item No	Item Description	Units	Approx. Quantities	Unit Prices in Numbers		Bid Amount in Numbers	
				Dollars	Cents	Dollars	Cents
			BROUGHT FORWARD:				
655.209	1/2" Liquid Tight Metallic Flexible Conduit	Linear Foot	360				
655.210	3/4" Liquid Tight Metallic Flexible Conduit	Linear Foot	270				
655.2101	1 1/2" Liquid Tight Metallic Flexible Conduit	Linear Foot	100				
655.211	1 1/2" Electrical Metallic Tubing Conduit	Linear Foot	30				
655.212	2" Electrical Metallic Tubing Conduit	Linear Foot	150				
655.213	3" Electrical Metallic Tubing Conduit	Linear Foot	180				
655.214	4" Electrical Metallic Tubing Conduit	Linear Foot	40				
655.215	3/4" Electrical Metallic Tubing Conduit	Linear Foot	50				
655.221	Type A Pull Box Inside	Each	8				
655.222	Type C Pull Box in Tunnel	Each	4				
655.223	Type D Pull Box Outdoor Canopy	Each	4				
655.224	Type E Pull Box Steel In booth	Each	4				

CARRIED FORWARD:

Item No	Item Description	Units	Approx. Quantities	Unit Prices in Numbers		Bid Amount in Numbers	
				Dollars	Cents	Dollars	Cents
			BROUGHT FORWARD:				
655.225	Type F Pull Box Outside	Each	4				
655.30	12" x 12" x 6" Galvanized Junction Box	Each	58				
655.31	18" x 18" x 6" Galvanized Junction Box	Each	4				
655.40	24" x 24" x 12" Junction Box	Each	6				
655.42	36” x 30” x 20” NEMA 4X Cabinet	Each	2				
655.43	60 AMP Panelboard Cabinet	Each	1				
655.63	4-inch x 4-inch Plastic NEMA 4R Wireway	Linear Foot	12				
655.64	6-inch x 6-inch Plastic NEMA 4R Wireway	Linear Foot	12				
655.71	Removal of Existing Select Toll Equipment	Lump Sum	1				
655.75	Concrete Encased Conduit	Cubic Yard	25				
655.80	Lightning Suppression System	Each	2				
655.81	Key Switch	Each	4				

CARRIED FORWARD:

Item No	Item Description	Units	Approx. Quantities	Unit Prices in Numbers		Bid Amount in Numbers	
				Dollars	Cents	Dollars	Cents
			BROUGHT FORWARD:				
655.82	Duplex Receptacle	Each	8				
655.83	NEMA L5-30R Receptacle	Each	4				
655.90	Space Frame Lighting	Lump Sum	1				
655.91	LED Replacement Canopy Light Fixture	Each	12				
656.50	Baled Hay, in place	Each	50				
656.60	Temporary Berms	Linear Foot	2,100				
656.62	Temporary Slope Drains	Linear Foot	150				
656.632	30" Temporary Silt Fence	Linear Foot	5,900				
659.10	Mobilization	Lump Sum	1				
800.10	Electrical Demolition	Lump Sum	1				
800.20	Mechanical Demolition	Lump Sum	1				
800.30	Toll Plaza Demolition and Restoration	Lump Sum	1				

TOTAL:

Acknowledgment is hereby made of the following Addenda received since issuance of the Plans and Specifications: _____
_____
_____

We will enter into a Contract with the following electrical contractor prequalified by the Maine Department of Transportation for Traffic Signals and Lighting Projects for all the 655 pay item work if awarded the Project_____.

Accompanying this Proposal is an original bid bond, cashiers or certified check on _____ Bank, for _____, payable to the Maine Turnpike Authority. In case this Proposal shall be accepted by the Maine Turnpike Authority and the undersigned should fail to execute a Contract with, and furnish the security required by the Maine Turnpike Authority as set forth in the Specifications, within the time fixed therein, an amount of money equal to Five (5%) Percent of the Total Amount of the Proposal for the Contract awarded to the undersigned, but not less than $500.00, obtained out of the original bid bond, cashier's or certified check, shall become the property of the Maine Turnpike Authority; otherwise the check will be returned to the undersigned.

The performance of said Work under this Contract will be completed during the time specified in Subsection 107.1.

It is agreed that time is of the essence of this Contract and that I (we) will, in the event of my (our) failure to complete the Work within the time limit named above, pay to the Maine Turnpike Authority liquidated damages in the amount or amounts stated in the Specifications.

The undersigned is an Individual/Partnership/Corporation under the laws of the State of _____, having principal office at _____, thereunto duly authorized.

_____ *(SEAL)*

_____ *(SEAL)*

Affix Corporate Seal
or Power of Attorney
Where Applicable

_____ *(SEAL)*

By: _____

Its: _____

Information below to be typed or printed where applicable:

INDIVIDUAL:

_____	_____
(Name)	(Address)

PARTNERSHIP - Name and Address of General Partners:

_____	_____
(Name)	(Address)
_____	_____
(Name)	(Address)
_____	_____
(Name)	(Address)
_____	_____
(Name)	(Address)

INCORPORATED COMPANY:

_____	_____
(President)	(Address)
_____	_____
(Vice-President)	(Address)
_____	_____
(Secretary)	(Address)
_____	_____
(Treasurer)	(Address)

MAINE TURNPIKE AUTHORITY

MAINE TURNPIKE

YORK TO AUGUSTA

CONTRACT AGREEMENT

This Agreement made and entered into between the Maine Turnpike Authority, and sometimes termed the "Authority", and _____

_____

herein termed the "Contractor":

WITNESSETH: That the Authority and the Contractor, in consideration of the premises and of the mutual covenants, considerations and agreements herein contained, agree as follows:

FIRST: The parties hereto mutually agree that the documents attached hereto and herein incorporated and made a part hereof collectively evidencing and constituting the entire Contract to the same extent as if herein written in full, are the Notice to Contractors, the Accepted Proposal, the Specifications, the Plans, this Agreement, the Contract Bond and all Addenda to the Contract Documents duly issued and herewith enumerated:

_____

_____

SECOND: The Contractor for and in consideration of certain payments to be made as hereafter specified, hereby covenants and agrees to perform and execute all of the provisions of this Contract and of all documents and parts attached hereto and made a part thereof, and at his own cost and expense to furnish and perform everything necessary and required to construct and complete, ready for its intended purpose, in accordance with the Contract and such instructions as the Engineer may give, acceptable to the Authority, in the times provided, all of the Work covered and included under Contract No. _____ covering _____ as herein described.

THIRD: In consideration of the performance by the Contractor of his covenants and agreements as herein set forth, the Authority hereby covenants and agrees to pay the Contractor according to the Schedule of Prices set forth in the Proposal with additions and deductions as elsewhere herein provided in the times and in the manner stated in the Specifications. This Agreement shall insure to the benefit of, and shall be binding upon the parties hereto, and upon their respective successors and assigns; but neither party hereto shall assign or transfer his interest herein in whole or in part without the consent of the other, except as herein provided.

IN WITNESS WHEREOF the parties to this Agreement have executed the same in quintuplicate.

AUTHORITY -

MAINE TURNPIKE AUTHORITY

By: _____

Title: CHAIRMAN

Date of Signature: _____

ATTEST:

_____
Secretary

CONTRACTOR -

_____
CONTRACTOR

By: _____

Title: _____

Date of Signature: _____

WITNESS:

_____

CONTRACT BOND

KNOW ALL MEN BY THESE PRESENTS that _____

of _____ in the County of _____ and State of _____

as Principal, and _____ a Corporation duly organized under

the laws of the State of _____ and having a usual place of business in _____

_____

As Surety, are held and firmly bound unto the Maine Turnpike Authority in the sum of _____Dollars ($_____.___), to be paid to said Maine Turnpike Authority, or its successors, for which payment, well and truly to be made, we bind ourselves, our heirs, executors, successors and assigns jointly and severally by these presents.

The condition of this obligation is such that the Principal, designated as Contractor in the foregoing Contract No. _____ shall faithfully perform the Contract on his part and satisfy all claims and demands incurred for the same and shall pay all bills for labor, material, equipment and all other items contracted for, or used by him, in connection with the Work contemplated by said Contract, and shall fully reimburse the Obligee for all outlay and expense which the Obligee may incur in making good any default of said Principal, then this Obligation shall be null and void; otherwise it shall remain in full force and effect.

Signed and sealed this _____ day of _____, A.D., 201___

Witnesses:	CONTRACTOR	
_____	_____	*(SEAL)*
_____	_____	*(SEAL)*
_____	_____	*(SEAL)*
	SURETY	
_____	_____	*(SEAL)*
_____	_____	*(SEAL)*
_____	_____	*(SEAL)*

(Surety must attach copy of Power of Attorney showing authority of Office or Agent to execute bonds)

FINAL LIEN AND CLAIM WAIVER AND AFFIDAVIT

Upon receipt of the sum of _____, which sum represents the total amount paid, including the current payment for work done and materials supplied for Project No. _____, in _____, Maine, under the undersigned's Contract with the Maine Turnpike Authority.

The undersigned, on oath, states that the Final Payment of _____ is the final payment for all work, labor, materials, services and miscellaneous (all of which are hereinafter referred to as "Work Items") supplied to the said Project through _____and that no additional sum is claimed by the undersigned respecting said Project.

The undersigned, on oath, states that all persons and firms who supplied Work Items to the undersigned in connection with said Project have been fully paid by the undersigned for such Work Items or that such payment will be fully effected immediately upon receipt of this payment.

In consideration of the payment herewith made, the undersigned does fully and finally release and hold harmless the Maine Turnpike Authority, and its Surety, if any, from any and all claims, liens or right to claim or lien, arising out of this Project under any applicable bond, law or statute.

It is understood that this Affidavit is submitted to assure the Owner and others that all liens and claims relating to the Work Items furnished by the undersigned are paid.

_____
(Contractor)

By: _____

Title: _____

State of MAINE

County of _____

I, _____, hereby certify on behalf of _____
(Company Officer) *(Company Name)*

its _____, being first duly sworn and stated that the foregoing representations are
(Title)

are true and correct upon his own knowledge and that the foregoing is his free act and deed in said capacity and the free act and deed of the above-named _____.
(Company Name)

The above-named, _____, personally appeared before me this ____ day of _____ and swears that this is his free act and deed.

(SEAL)

_____
Notary Public

My Commission Expires: _____

MAINE TURNPIKE AUTHORITY

SPECIFICATIONS

PART I – GENERAL PROVISIONS

(Rev. May 18, 2009)

DIVISION 100 - GENERAL PROVISIONS

100.1 Replacement of Former Standard Specifications and Details

The following paragraphs are added:

The Maine Department of Transportation Standard Specifications Revisions of 2002 as modified herein is referenced and incorporated in all Maine Turnpike Authority Construction Contracts. These Maine Turnpike General Provisions replace all previous Maine Turnpike General Provisions and are additions and alterations to the Maine Department of Transportation Standard Specifications. Maine Department of Transportation Consolidated Special Provisions or corrections, additions, and revisions to their Standard Specifications are not referenced or incorporated unless specifically included in the Contract. Applicable MaineDOT December 28, 2004 Consolidated Special Provisions, corrections, additions, and revisions have been incorporated into this document.

All references to components or employees of the Maine Department of Transportation listed in Column A shall also refer to components or employees of the Maine Turnpike Authority in Column B unless otherwise stated.

A	B
Maine Department of Transportation	Maine Turnpike Authority
Department	Authority
Commissioner	Executive Director
Contracts Engineer	Purchasing Manager
Contracts Section	Purchasing Department
Chief Engineer	Director of Engineering
Bureau of Project Development	Maine Turnpike Authority

SECTION 101 – CONTRACT INTERPRETATION

101.2 Definitions

The following definitions are added or revised:

Authority - The Maine Turnpike Authority, a body corporate and politic duly created and existing under and by virtue of an act of the Legislature of the State of Maine, Chapter 69 of the Private and Special Laws of 1941, as amended.

Award - The resolution of the Authority at an official meeting expressly authorizing the Executive Director or his designee to notify the successful Bidder that his/her Proposal has been accepted and that he/she is required to execute the Contract Agreement and to furnish satisfactory Bonds.

Environmental Information - Hazardous waste assessments, dredge material test results, boring logs, geophysical studies, and other records and reports of the environmental conditions. For a related provision, see Subsection 104.3.14, Interpretation and Interpolation.

Fabrication Engineer - The Department's representative responsible for Quality Assurance of pre-fabricated products that are produced off-site.

Geotechnical Information - Replace with the following: "Boring logs, soil reports, geotechnical design reports, ground penetrating radar evaluations, seismic refraction studies, and other records of subsurface conditions. For a related provision, see Subsection 104.3.14, Interpretation and Interpolation.

Holidays - The following are extended to include the Holiday Period:

HOLIDAY	HOLIDAY PERIOD
Martin Luther King Day	12:01 a.m. (Midnight) to 11:59 p.m. Martin Luther King Day.
President's Day	12:01 a.m. (Midnight) preceding Friday to 12:01 p.m. following Tuesday.
Easter	12:01 a.m. (Midnight) preceding Friday to 12:01 p.m. following Monday.
Memorial Day	12:01 p.m. preceding Thursday to 6:00 a.m. following Tuesday.
Labor Day	12:01 p.m. preceding Thursday to 6:00 a.m. following Tuesday.
Columbus Day	12:01 a.m. (Midnight) preceding Friday to 12:01 p.m. following Tuesday.
Veterans' Day	12:01 a.m. (Midnight) to 11:59 p.m. Veterans' Day.
Thanksgiving Day	12:01 a.m. (Midnight) preceding Wednesday to 12:01 p.m. following Monday.

Project - The following sentence is added:

All the Work to be performed under the Contract.

Solicitation - Contract proposal sent to a select list of Contractors. Solicitations do include a requirement for a bid bond. Solicitations do not need Maine Turnpike Board Approval for an award.

Turnpike - The entire toll highway, including all approaches, bridges, interchanges, toll facilities, and structures owned by the Maine Turnpike Authority, and authorized by Chapter 69, Private and Special Laws of Maine, 1941, as amended, and located on properties held in the name of the Authority.

Working Day - The Contractor shall not work during the period from 1/2-hour after sunset to 1/2-hour before sunrise, unless otherwise approved by the Resident.

If, after approval, Work is performed on a Saturday, Sunday, or a holiday, the day shall be considered a Working Day.

SECTION 102 - BIDDING

102.1.1 Basic Requirements

This Subsection is amended by the addition of the following:

To be eligible to Bid, prospective Bidders must not have been debarred or suspended from Bidding by the Authority or the Maine Department of Transportation.

102.6 Bid Guaranty

The second paragraph is deleted and replaced with the following:

No Proposal will be considered unless accompanied by a "Proposal Guaranty" in the form of an original bid bond, certified or cashier's check in favor of the Maine Turnpike Authority, in the amount of not less than five (5%) percent of the Total Amount of the Proposal, except that the amount of the check or Proposal Guaranty shall not be less than $500.00. Solicitations do not require a Bid Guaranty.

Sentence (C) of the third paragraph is deleted and not replaced.

102.7.1 Location and Time

The first paragraph is deleted and replaced with the following:

The Proposal and the Proposal Guaranty shall be enclosed in a sealed envelope furnished by the Authority for this purpose, and shall bear on the outside, the name and address of the Bidder as well as the designation of the Project as named in the Proposal form. Proposals will be received at the place and time stated in the Notice to Contractors, Solicitation, or Addendum as determined by the Authority. Proposals received after the time for opening of bids will be returned to the Bidder unopened. See also Subsection 102.11, Bid Responsiveness.

102.7.2 Effects of Signing and Delivery of Bids

Paragraph C, Certifications, is deleted and not replaced.

SECTION 103 - AWARD AND CONTRACTING

103.3.1 Notice and Information Gathering

This Subsection is deleted and replaced with the following:

The Authority will review the Bid Proposals. As a condition for Award of a Contract, the Authority may require an Apparent Successful Bidder to demonstrate to the Authority's satisfaction that the Bidder is responsible and qualified to perform the Work. If such information is required, the Authority, or the Authority's agent, will contact the Apparent Successful Bidder and request specific information. If requested by the Apparent Successful Bidder, this request can be in writing. The Apparent Successful Bidder shall respond to the request within 24-hours (one work day) unless both parties agree in writing to extend the deadline.

103.3.2 Notice of Determination

The first paragraph is deleted and replaced with the following:

If the Authority determines that a Bidder is "Not Qualified", the Authority or its representative will notify the Bidder in writing of its determination. The notice will set forth the specific reasons therefore to the extent practical. Such reasons may include the following:

N. Bidder has previously performed Work for the State or for the Authority in an unsatisfactory manner;

O. Bidder does not have the capacity to perform the required Work in the opinion of the Authority;

P. This Project combined with other projects committed to by the Bidder puts him in excess of his capacity in the opinion of the Authority;

Q. Reasonable grounds for believing that the Bidder is interested in more than one Proposal for the Work contemplated;

R. Developments arise which, in the opinion of the Authority, adversely affect the Bidder's responsibility; and/or,

S. Lack of qualifications as determined by the Authority.

The Maine Turnpike Authority Board or Executive Director must approve the Award of a Contract. Once approved, the Contractor will be provided with a "Notice of Award". See Subsection 103.4.

103.3.3 Appeal

"Commissioner" is replaced with "Chief Operations Officer".

The third and fourth paragraphs are deleted and replaced with the following:

Within 14 Days of Receipt of such information and arguments, the Chief Operations Officer will notify the Bidder in writing as to whether the decision of "Not Qualified" is upheld, modified, or reversed. The Chief Operations Officer's decision is final.

After a final determination of "Not Qualified" the Bidder's Bid Guaranty will be returned and the Bidder will be ineligible to bid on future MTA Contracts until the Bidder has been determined "Qualified" by the Maine Turnpike.

103.4 Notice of Award

This Subsection is deleted and replaced with the following:

Within five (5) days of the Maine Turnpike Authority Board or Executive Director approval of a Contract Award, the Authority will transmit to the successful Bidder a Notice of Award along with the Contract Documents for execution by the Contractor. The Authority has the option of notifying the successful low Bidder that the above noted material is available at the Authority for the Contractor to pick-up. The Contractor has 20 days following the Bid Opening to deliver to the Authority the signed Contract Documents, required bonds, insurance certificates, and other required information from the successful Bidder. Once these Documents are submitted to the Authority, the Authority will execute the Contract. If the Authority does not execute the Contract within 30 days of receipt of all the proper requested information, the successful Bidder may withdraw their bid without forfeiture of its Bid Guaranty or bidding eligibility. If the Authority and the successful Bidder agree in writing, an extension may be allowed.

103.5.4 Execution of Contract by Bidder

The first sentence is deleted and replaced with the following:

The properly completed and signed Contract Agreement form provided in the Contract Documents constitutes the Bidder's offer.

103.8 Execution of Contract by Department

This Subsection is deleted and replaced with the following:

The Contract will be awarded or Proposals rejected within twenty (20) days from the date of Proposal openings, except that by mutual written agreement between the Bidders and the Authority, the award may be withheld for any length of time. Any Bidder not agreeing to extend the award date shall be eliminated from the Bid List without prejudice, and their Bid Bond released.

The Contract shall not be binding until the Contract has been executed by the Authority, nor shall any Work be performed on account of the proposed Contract until the Contract has been fully executed and delivered.

SECTION 104 - GENERAL RIGHTS AND RESPONSIBILITIES

104.2.1 Furnishing of Right-of-Way

The first sentence is deleted and replaced with the following:

The Maine Turnpike Authority will secure all necessary rights to real property within the Project Limits shown on the Plans.

104.2.3 Authority of Project Manager and Resident

The following sentences are added:

The Resident is not responsible for supervising the construction Work and is not responsible for monitoring jobsite safety.

The Resident is not authorized to increase the obligation of the Authority to the Contractor, except as specifically set forth in the Specifications.

104.3.5 Duties Regarding Inspection of Work

The following paragraphs are added at the end of Paragraph A. Safe Access:

The Contractor shall furnish the Resident with every reasonable facility for ascertaining whether or not the Work is performed and the materials are furnished in accordance with the requirements and intent of the Contract. Such inspection may include mill, plant or shop inspection. If at any time before acceptance of the Work, the Resident requests it in writing, the Contractor shall remove or uncover such portion of the finished Work as directed. After examination, the Contractor shall restore said portions of the Work to the standards required by the Specifications. Should the Work exposed or examined meet the requirements of the Plans and Specifications, the uncovering or removing and the restoration of the uncovered Work shall be paid for as Extra Work except that no such payment will be made in those cases for which such removal is required by the Plans and Specifications as a part of the Work under the Project. Should the Work not meet the requirements of the Plans and Specifications, the uncovering or removing and restoration shall be at the Contractor's own expense. Any Work done or materials used without suitable supervision or inspection may be ordered to be removed and replaced by the Contractor without extra compensation.

No Work shall be done at night, on weekends, or legal holidays, without prior notice and approval of the Resident. No night Work shall be done until the Contractor has provided an adequate and sufficient source of artificial light to permit examination by the Resident of the suitability of the materials being used and the quality and character of the workmanship.

104.3.7 Laws to be Observed

This Subsection is amended by the addition of the following:

Any section of roadway open to the traveling public is a public way and subject to the applicable rules, regulations, and laws.

104.3.8 Wage Rates and Labor Laws

This Subsection is amended as follows:

A. Federal Wage Rates and Labor Laws is deleted and not replaced.

B. State Wage Rates and Labor Laws.

This Subsection is amended by the addition of the following:

This Contract is governed by the Prevailing Wage Provisions in Title 26, Chapter 15 of the Maine Revised Statutes Annotated. State Wage Rates, if applicable to the Contract, will be included in the Special Provisions.

Fair Minimum Wages

The hourly wage rate paid to laborers of the General Contractor and all Subcontractors shall not be less than the prevailing hourly rate of wages for Work of similar character in the State of Maine. The fair minimum hourly rates determined by the State of Maine Department of Labor for this Contract are included as part of this Contract.

A copy of the Wage Determination(s) shall be provided by the Contractor to all Subcontractors on the Project. In addition, the Wage Determination(s) must be kept posted at the Work site by the Contractor and by all Subcontractors at a prominent location, easily accessible by the workers. On a Project where there is no such location, a Contractor may comply with this requirement by providing each worker with a copy of the Wage Determination(s) within the first full day that the worker works on that Project. The Contractor must be able to document that each worker has received a copy of the Wage Determination(s).

Records

The Contractor and all Subcontractors shall keep an accurate record noting:

- The name and occupation of each and all laborers, workmen, and mechanics employed by them, and all independent Contractors working under Contract to them in connection to the Project;
- Number of hours worked;
- Title of the job;
- Hourly rate or other method of remuneration for the job; and,
- Actual wages or other compensation paid to each of the laborers, workmen, mechanics, and independent Contractors.

A copy of this record must be kept at the jobsite and shall be available at all reasonable hours to the inspection of the Bureau of Labor and/or the Maine Turnpike Authority, its officers and agents. These records must be preserved for a minimum of three (3) years after the completion of the Contract.

A copy of each record must be filed monthly with the Maine Turnpike Authority. This information shall be sent directly to the Maine Turnpike Authority, Director of Engineering and Building Maintenance, Attention: Wage Rate Records, 2360 Congress Street, Portland, ME 04102. The records shall note the Maine Turnpike Contract Number.

The Contractor and all Subcontractors are subject to penalties described in Title 26, Chapter 15 of the Maine Revised Statutes Annotated, for any violations of the Fair Minimum Wage Rates Policy for the State of Maine.

104.3.11 Responsibility for Property of Others

This Subsection is amended by the addition of the following:

The Contractor shall respond to all damage claims in writing, within 30 days, to the party making a damage claim. The response shall state that the Contractor accepts responsibility for the damage or outlines the reasons why the claim has been denied. If the Contractor has turned the claim over to their insurance agent or carrier, the name of the agent or carrier, along with the contact person, address and telephone information shall be included in the response to the claimant and a copy to the Authority. A standard form letter denying the claim without an explanation of the situation shall be unacceptable. A copy of the response letter shall be submitted to the Authority within the 30 day response time. The Authority shall review the response letter and will determine if the Contractor has replied in a responsive manner. If the Authority does not receive a response letter or action report from the Contractor within the 30 day response time, the Authority will determine if the Contractor is responsible for the claimed damage. If, in the absence of the Contractor's response or action report, the Authority deems the claim to be valid, the Authority will at its option pay the damage claim and deduct the amount of the claim from the Contractor. The Contractor will not be entitled to recoup these funds if their response was not transmitted within the 30 day response time. The Authority will not intervene in any claim actions where the Contractor's insurance carrier is conducting a valid, ongoing claim investigation.

104.3.14 Interpretation and Interpolation

The first sentence is change from "...and Geotechnical Information." to "...Environmental Information, and Geotechnical Information".

104.4.2 Preconstruction Conference

The following Matrix is added:

Project Decision Matrix

A Project "communication decision tree" will be developed mutually by the Authority and the Contractor during either the preconstruction meeting or partnering session. This Decision Matrix will clearly define, by descriptive job title and name, the respective counterparts for the Authority, and the Contractor who will be responsible for resolving issues at their respective levels of communication. Each level of communicators will be assigned a dollar magnitude of authority and a designated period of time within which all disputed issues must either be resolved or referred to the next higher level of communicators. The purpose of this Decision Matrix is to accelerate the resolution of decisions, to promote resolution at the lowest possible level, and to reduce the number of issues that become disputes.

The following is a sample of the Decision Matrix:

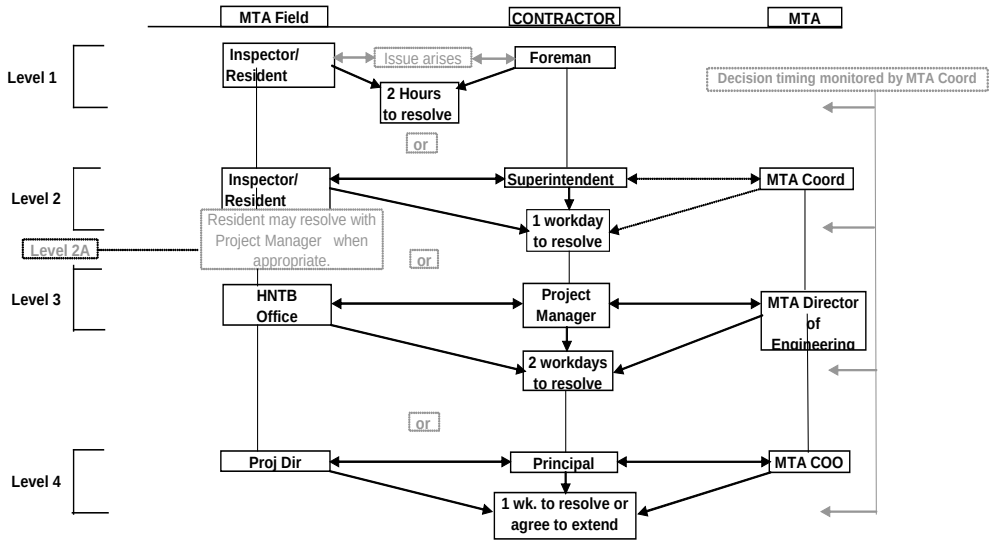

Level 5 **If an issue is not resolved at Level 4, the matter becomes a Dispute. Refer to Section 111**

Notes:

1) **Each project will enter names in all title boxes at Preconstruction or Partnering sessions.**
2) **Substitute names will be provided for all key decision levels.**
3) **Each decision level will be empowered with a maximum dollar guidance value.**
4) **Issues will automatically bounce up to next level if decision time limits are surpassed.**

104.4.5 Early Negotiation

The second paragraph in Part A is deleted and replaced with the following:

Such notice may not be verbal. Notice shall be in the form of a written memo with signatures representing both the Owner and Contractor or shall be in the form of meeting minutes within 14 days of the date that the issue became known. Meeting minutes shall not be valid documentation until they are accepted by the Resident and the Contractor.

Paragraph C, Additional Consideration, is deleted and not replaced. See related Subsection 104.4.2.

104.4.7 Cooperation With Other Contractors

This Subsection is amended by the addition of the following:

The Contractor shall cooperate with the Maine Turnpike Authority. The Authority reserves the right to conduct maintenance operations and to erect and remove traffic control devices as deemed necessary by the Authority or the Resident within or adjacent to the Project.

The Contractor shall note that other contracts may be awarded for Work adjacent to this Contract and these shall be considered adjacent contracts. The Contractor shall cooperate with other Contractors and the Resident so that all Work can be completed in a safe and timely manner. The Resident may direct the Contractor to revise the Work or schedule based on Work that is ongoing in the adjacent Contract. The Contractor's Superintendent or Project Manager shall attend coordination meetings with the Resident and the adjacent Contractors at least once every two weeks. All Contractors bear the full responsibility of cooperation and coordination with each other in the planning and scheduling of traffic closures, stoppages, and other construction activity. The Resident's responsibility for coordination is limited to the timely dissemination of all schedules and information submitted by adjacent Contractors. Neither the Resident, nor the Maine Turnpike Authority, shall bear any responsibility for costs resulting from a Contractor's failure to submit all information as required. Issues and concerns not presented for review and discussion at joint Contractor meetings will not later be cause for claims. This cooperation shall be completed at no additional cost to the Authority.

The Contractor working on an adjacent section may require the placement of temporary construction signs and traffic control devices within this Project area. The placement and maintenance of these devices by another Contractor shall be allowed in this Contract at no additional cost to the Authority.

104.4.10 Coordination of Bridge Closure/Bridge Width Restriction Notification

This Subsection is deleted and replaced with the following:

The Contractor shall notify the Authority a minimum of two (2) weeks prior to the date of closure/restriction with the date on which the closure/restriction will begin and the anticipated duration of the closure/restriction. The Authority will be responsible for notification to others.

104.5.9 Landscape Subcontractors

This Subsection is deleted and replaced with the following:

The Contractor shall retain only Landscape Subcontractors that are certified by the Maine Department of Transportation Environmental Office Landscape Unit.

SECTION 105 – GENERAL SCOPE OF WORK

Scope of Section

The second paragraph is deleted and replaced with the following:

This Contract is not federally funded.

105.1 Intent of the Contract

This Subsection is amended by the addition of the following:

The Plans and Specifications complement and supplement each other. Should any Work be required, which is not denoted on the Plans or in the Specifications because of an omission, but which is nevertheless necessary for the proper performance and completion of the Project, such Work shall be fully performed as if it were described and delineated. Should any misunderstanding arise as to the intent or meaning of said Plans and Specifications, refer to Subsection 104.4.4, Requests for Information.

The silence of the Specifications, Plans, or other supplemental documents as to any detail, or the apparent omission from them of a detailed description concerning any point, shall be regarded as meaning that only material and workmanship of excellent quality are to be used.

105.2.3 Joint Duty Regarding Safety

The first sentence is amended as follows:

The "Contractor's TCP" is deleted and replaced with "Traffic Control Plan".

This Subsection is amended by the addition of the following:

Nothing in the foregoing paragraphs shall be construed as relieving the Contractor from full responsibility for safe prosecution of the Work at all times. The Resident is not responsible for jobsite safety.

The following Subsection is added:

105.2.4.1 Lockout/Tagout Procedures

Prior to the start of Work, the Contractor and the Maine Turnpike Authority shall exchange and review the other party's Lockout/Tagout Procedures for the control of hazardous energy. If the Lockout/Tagout Procedures are similar and neither party has concerns, the two parties shall agree to abide by the procedures of the other party. Only the authorized individual who locked or tagged-out a circuit or piece of equipment is permitted to remove the lockout/tagout, except as provided for in the respective Lockout/Tagout Procedures.

Should either the Contractor or the Maine Turnpike Authority have concerns with the other party's Lockout/Tagout Procedures, the Safety Officers of the Contractor and the Maine Turnpike Authority shall meet, discuss and resolve the areas of concern. The Authority reserves the right to have the Contractor comply with the restrictions and prohibitions of the Maine Turnpike Authority's Lockout/Tagout Procedures if the Authority determines the Contractor's Lockout/Tagout Procedures are inadequate to protect the Authority's employees and patrons.

105.4.1 Maintenance During Construction

This Subsection is amended by the addition of the following:

Paved Surface - The Contractor is responsible for maintaining the existing paved shoulder, ramps, and travel lanes on the Maine Turnpike in good condition. The presence of tracked-dirt on the paved surfaces is unacceptable. The Resident shall have the sole authority to determine the acceptability of the paved surfaces. The use of stabilized construction entrances and frequent sweeping of the shoulder are the responsibility of the Contractor and shall be completed at no additional costs to the Authority.

Gravel Surface - The Contractor is responsible for maintaining gravel surfaces that are used for traffic in good condition. Potholes and wheel ruts are unacceptable. The Resident shall have the sole authority to determine the acceptability of the surfaces. Repairing the surfaces are the responsibility of the Contractor and shall be completed at no additional costs to the Authority.

Signs and Delineators - The Contractor is responsible for maintaining all mile markers, delineator, and signs including regulatory, warning, and guide signs during construction. Maintenance of signs shall mean that signs are clearly visible to motorists at the required height during construction. These items shall be kept in their existing location as long as is practicable. At no time shall any signs not be visible to the

driver. Construction material or equipment shall not obscure signs. This Work shall be accomplished at no additional cost to the Authority.

Erosion and Sedimentation Control - The Contractor shall plan their operations to protect existing Work from erosion. The Contractor is responsible for the inspection and maintenance of all erosion and sedimentation control devices until final acceptance. No payment will be made to repair failed areas if the Best Management Practices had not been utilized prior to a weather event.

105.4.3 Maintenance During Winter Construction

This Subsection is amended by the addition of the following:

The Maine Turnpike Authority will be responsible for winter maintenance including snow removal and application of salt on Maine Turnpike pavement open to traffic.

105.5.1 General Requirements

This Subsection is amended by the addition of the following:

Toll Free Passage on the Turnpike

The Contractor shall be granted free use of the turnpike for movement of vehicles, labor and equipment and for delivery of material essential to the Work. The Contractor will be issued cards with the Contract Number and Contractor Name while working on the Project. The cards shall be transferable and distributed by the Contractor to employees and vehicles working on the Project. The cards may only be used while working on the Project designated on the cards. Such free use shall be limited to the portion of the turnpike between the site of the Work and the nearest practicable exit including movement of vehicles, labor, equipment and materials from one site to another Work site. All vehicles must stop at a manned lane at the toll plazas to present the cards to the toll attendant. Vehicles without the required cards shall pay the required toll. This shall not be a reimbursable expense. The Contractor shall advise the Resident of the number of cards that are required. All cards shall be returned to the Resident at the completion of the Project. The use of the cards for toll free travel shall be revoked if the cards are misused. The Contractor shall nevertheless comply with regulations of the Authority relating to use of the turnpike and with established controls for non-revenue vehicles.

Existing Access

All existing access from local roads to the Maine Turnpike shall remain passable to emergency vehicles at all time. At no time shall construction equipment or material block these roads. Any misuse of this privilege will result in the Contractor's loss of access through these gates. The Contractor shall provide a lock and a piece of chain to link to the existing padlock on the gate allowing access to the Contractor and emergency vehicles.

Access From Local Roads

The Contractor shall not impact wetlands or streams to construct access to the Project. The Contractor may construct temporary access to the turnpike to facilitate the Project. Any damage caused to private property or local roads as a result of the access shall be repaired at the Contractor's own expense. The Contractor shall prepare a written plan outlining the proposed access.

At a minimum, the plan shall outline the following:

- Estimated number of vehicles;

- Time and duration of operation;
- Types of vehicles to use the access;
- Plans to construct a stabilized construction entrance;
- Plan to keep the local road free of tracked-mud and dust;
- Plan to control access to prevent unauthorized use;
- Restoration plan; and,
- Written permission from private property owners (if required).

The Contractor is required to retain the services of qualified flaggers to control the Contractor's operation at the local road access. Flaggers shall be present whenever construction vehicles are utilizing the access. The Contractor shall be responsible for constructing a gate across the access point to prohibit unauthorized access. The Contractor shall also construct a stabilized construction entrance in accordance with the MaineDOT Best Management Practices. All cost associated with the access including, but not necessarily limited to, the construction, restoration, flaggers, gate, and stabilized construction entrance shall be the responsibility of the Contractor. Failure to utilize flaggers will result in termination of permission to use local roads for access. Failure to keep local roads clear of tracked-mud will result in termination of permission to use local roads for access.

Construction Access

The Contractor shall construct a stabilized construction entrance in accordance with the Best Management Practices at all locations where construction vehicles will exit the mainline and/or enter the existing paved shoulder from a non-paved area. The Resident shall approve of the locations. The stabilized construction entrance shall be constructed in conjunction with the clearing activities or other early activities. Additional stabilized construction entrances may be required due to the Contractor's operations as well as site conditions. The construction and maintenance of the stabilized construction entrance shall be incidental.

Change of Direction

The Contractor will not be permitted to reverse directions (U-turns) at the toll plazas or at interchanges. All vehicles must exit the turnpike prior to reversing directions.

The Contractor shall not use the median openings on the turnpike unless the opening is located within passing lane closures on both roadways. The Contractor will be assessed a fine every time any employee of the Contractor, Subcontractor or supplier is observed using a median opening by a Resident or turnpike employee anywhere on the Maine Turnpike throughout the duration of the Contract. The fine will be deducted from monies owed to the Contractor.

The fines will be levied on a per occurrence basis as follows:

NUMBER OF OCCURRENCES	FINE
First	$100

For the second occurrence, and any occurrence thereafter, the fine is increased by $100 per each occurrence. The number of occurrences is not specific to a Contract, an individual or a vehicle, but based solely on the number of times any employee of the Contractor, Subcontractor or supplier is observed using a median opening anywhere on the Maine Turnpike. The Contractor shall be notified in writing of the violation by the Authority.

105.6 Construction Surveying

This Subsection is deleted in its entirety and replaced with the following:

105.6.1 Authority Provided Services

The Authority will provide the Contractor with the description and coordinates of vertical and horizontal control points, set by the Authority, within the Project Limits, for full construction Projects and other Projects where survey control is necessary. For Projects of 1,500 feet in length, or less: The Authority will provide three points. For Projects between 1,500 and 5,000 feet in length: The Authority will provide one set of two points at each end of the Project. For Projects in excess of 5,000 feet in length: The Authority will provide one set of two points at each end of the Project, plus one additional set of two points for each mile of Project length. For non-full construction Projects and other Projects where survey control is not necessary, the Authority will not set any control points and, therefore, will not provide description and coordinates of any control points: Upon request of the Contractor, the Authority will provide the Authority's survey data management software and Survey Manual to the Contractor, or its survey Subcontractor, for the exclusive use on the Authority's Projects.

105.6.2 Contractor Provided Services

Utilizing the survey information and points provided by the Authority, described in Subsection 105.6.1, Authority Provided Services, the Contractor shall provide all additional survey layout necessary to complete the Work. This may include, but not necessarily be limited to, reestablishing all points provided by the Authority, establishing additional control points, running axis lines, providing layout and maintenance of all other lines, grades, or points, and survey quality control to ensure conformance with the Contract. The Contractor is also responsible for providing construction centerline, or close reference points, for all utility facility relocations and adjustments as necessary to complete the Work. When the Work is to connect with existing structures, the Contractor shall verify all dimensions before proceeding with the Work. The Contractor shall employ or retain competent engineering and/or surveying personnel to fulfill these responsibilities.

The Contractor must notify the Authority of any errors or inconsistencies regarding the data and layout provided by the Authority as provided by Subsection 104.3.3, Duty to Notify Department If Ambiguities Discovered.

105.6.2.1 Quality Control

The Contractor is responsible for all construction survey quality control. Construction survey quality control is generally defined as, first, performing initial field survey layout of the Work and, second, performing an independent check of the initial layout using independent survey data to assure the accuracy of the initial layout; additional iterations or checks may be required if significant discrepancies are discovered in this process. Construction survey layout quality control also requires written documentation of the layout process such that the process can be followed and repeated, if necessary, by an independent survey crew.

105.6.3 Quality Assurance

It is the Authority's prerogative to perform construction survey quality assurance. Construction survey quality assurance may or may not be performed by the Authority. Construction survey quality assurance is generally defined as an independent check of the construction survey quality control. The construction survey quality assurance process may involve physically checking the Contractor's construction survey layout using independent survey data, or may simply involve reviewing the construction survey quality control written documentation. If the Authority elects to physically check the

Contractor's survey layout, the Contractor's designated surveyor may be required to be present. The Authority will provide a minimum notice of 48-hours to the Contractor, whenever possible, if the Contractor's designated surveyor's presence is required. Any errors discovered through the quality assurance process shall be corrected by the Contractor, at no additional cost to the Authority.

105.6.4 Boundary Markers

The Contractor shall preserve and protect from damage all monuments or other points that mark the boundaries of the right-of-way or abutting parcels that are outside the area that must be disturbed in order to perform the Work. The Contractor indemnifies and holds harmless the Authority from all claims to reestablish the former location of all such monuments or points including claims arising from 14 MRSA § 7554-A. For a related provision, see Subsection 104.3.11, Responsibility for Property of Others.

105.7.1 General

The following paragraphs are added:

Within ten (10) days after the date of execution of the Contract, the Contractor shall inform the Resident in writing of the sources from which he proposes to obtain the materials required for the Project and statements of quality of these materials as hereinafter required in Subsection 106.01, Roles Regarding Quality. Information or materials not required to be incorporated in the Work within six (6) months after said date of execution, may be furnished within thirty (30) days.

Prior to the approval of the submittal, any Work done or materials ordered shall be at the Contractor's own risk. All submittals shall be stamped and signed by the Contractor verifying their approval of the Shop Drawings.

Prior to forwarding submittals to the Resident for review and approval, the Contractor shall mark the Item Number on each submittal for identification, thoroughly check the submittals for compliance with the Contract Documents, and place its stamp of approval on each sheet certifying that the Contractor has so checked each submittal. The Contractor shall certify that "This Shop Drawing has been thoroughly checked and complies with the Contract Documents and field measurements and the item fits with adjoining Work except as noted". Submittals which do not contain this stamp of approval and certification, or which are incomplete, have not been checked, have been checked only superficially, or contain numerous errors, will be returned un-reviewed by the Resident for resubmission by the Contractor. Delays in obtaining approvals, other than those caused by the Authority, are not grounds for granting an extension of time. Disclaimers by the Contractor, any Subcontractor, or supplier of responsibility for any requirements of the Contract Documents, will not be accepted by the Authority and will be deemed invalid.

The following submissions are required if applicable to the Work:

- Construction plans for access
- Project master schedule
- Updated schedules as required
- Shop Drawings
- Spill Prevention Control and Countermeasure (SPCC) Plan
- Traffic control plans
- Temporary earth support system submission
- Bridge beam or structural steel erection plan

105.7.4 Submittal Requirements

The second paragraph is deleted and replaced with the following:

For the first and subsequent submittals, the Contractor shall submit a minimum of seven (7) sets of drawings to the Resident on the size sheets required unless otherwise directed by the Resident.

105.8.1 Temporary Soil Erosion and Water Pollution Control

This Subsection is amended by the addition of the following:

Spill Prevention Control and Countermeasure (SPCC) Plan

Any areas where petroleum products, oils or hazardous materials are handled or stored will require a Spill Prevention Control and Countermeasure (SPCC) Plan. The Plan will be submitted to the Resident before construction begins for review and approval. At a minimum, the Plan shall provide the following information:

1. Name of person who is responsible for spill prevention;

2. Description of handling or storage location, noting setbacks from water bodies where relevant. Significant sand and gravel aquifers and other sensitive resources must be avoided wherever possible;

3. Description of storage and containment facilities;

4. Description of equipment and/or materials used to prevent discharges (including sorbent materials);

5. Preventative measures to minimize the possibility of a spill; and,

6. Contingency plan if spill should occur.

The approved plan must be posted at the jobsite. All personnel working in the area are required to read and be familiar with the plan.

There shall be no separate payment for preparation of a SPCC Plan acceptable to the Resident and preparation is considered incidental to the Work.

ENVIRONMENTAL STANDARDS

The Project will be performed in accordance with the MaineDOT Best Management Practices (BMP) latest issue. The Contractor shall fully comply with all erosion and sedimentation control requirements outlined in the BMP's or contained herein. Non-compliance with these requirements as determined by the Resident shall result in a financial penalty of $1,000 per day, per violation. Any fines assessed to the Maine Turnpike Authority as a result of the Contractor's non-compliance shall be paid by the Contractor. If the Contractor fails to pay, the cost of the fine will be deducted from monies due, or which may become due to the Contractor under this Contract.

In the event of conflict between these Specifications and other erosion and pollution control laws, rules or regulations of other Federal, State and local agencies, the more restrictive law, rules or regulations shall apply.

The standards as described below shall be met on the Project:

1. Temporary erosion control measures shall be maintained until the site is permanently stabilized with vegetation or other permanent control measures.

2. The Contractor will immediately take appropriate measures to prevent erosion or sedimentation from occurring or to correct any existing problems regardless of the time of year.

3. Work in wetlands is prohibited except to the minimum extent necessary for completion of the Work as detailed on the Plans. Excavated and other material shall not be stockpiled in wetlands. Haybales, silt fence or other suitable barriers shall be used, where necessary, to prevent sedimentation from eroding materials.

4. Uncured concrete shall not be placed directly into the water body. Concrete may be placed in forms and shall cure at least one (1) week prior to form removal. No washing of tools, forms, etc. shall occur in or adjacent to the water body or wetland. Any additional requirements are outlined in Subsection 107.261 of the Special Provisions.

5. Disturbance of natural resources beyond the construction limits shown on the Plans is not allowed.

6. Bare earth slopes shall be roughened to dissipate sheet flow. This shall be accomplished by "tracking" the slope perpendicular to the centerline. No bare earth shall be maintained for more than five days without surface roughening. This Work will not be measured separately for payment, but shall be incidental to the Excavation item.

7. No wheeled or tracked equipment shall be operated in the water. Equipment operating on the shore may reach into the water with a bucket or similar extension. Equipment may NOT cross streams.

8. Existing ditches shall be maintained until the new ditches are stabilized. Stone check dams shall be placed in existing ditches prior to construction as to prevent the release of sedimentation. Stone check dams shall be installed at the outlets of all existing and proposed ditches adjacent to all stream and wetlands.

9. The Contractor's operation may require the placement of temporary pipes and fill over a ditch line to provide access to the Work area. The Resident shall approve the size of the pipe. The placement and removal of the temporary access will not be measured separately for payment, but shall be incidental to the Excavation item.

105.10 Equal Opportunity and Civil Rights

105.10.1 Requirements Applicable to Federally Funded Contracts

This Subsection is deleted and not replaced.

105.10.2 Requirements Applicable to All Contracts

The following is added after Paragraph (A), Maine Code of Fair Practice and Affirmative Action, Paragraph 4).

The Maine Turnpike Authority is an equal opportunity employer and as such, requires all Contractors to pursue in good faith affirmative action programs.

THEREFORE;

The Contractor hereby agrees to the following requirements:

1. The Contractor will pursue an affirmative action program which includes procedures designed to increase the numbers of minorities, women, and handicapped at all levels and in all segments of the workforce where imbalances exist. Such a program should include an assessment of the existing situation, and the development of realistic goals for necessary actions. These goals and related procedures and timetables should not require rigid quotas but are commitments which the Contractor should make every good faith effort to achieve.

2. In connection with Contracts in excess of $250,000, the Contractor will insure contractually that all Subcontractors shall also pursue an affirmative action program meeting the above requirements. The Contractor shall also ensure contractually that all Subcontractors with Contracts in excess of $50,000 pursue an affirmative action program meeting the above requirements.

3. An affirmative action program will provide that no Contractor and/or Subcontractor will discriminate against an employee or applicant for employment because of race, color, religious creed, sex, national origin, ancestry, age, physical handicap or mental handicap unless based upon a bona fide occupational qualification. Such action shall include, but not necessarily be limited to, the following; employment, upgrading, demotions, transfers, recruitment or recruitment advertising, layoffs or terminations, rates of pay and compensation, and selection for training and apprenticeship.

Paragraph (D), Prevention of Sexual Harassment, is deleted and replaced with the following:

Contractors are responsible, under Maine State Law, for ensuring and maintaining a Work environment that is free from sexual harassment. The Contractor shall comply with all relevant provisions of Maine State Law in regard to sexual harassment including, but not necessarily limited to, 5 MRSA 4572, 26 MRSA 806-807, and the regulations of the Maine Human Rights Commission.

Subsections 105.10.2 (E), DBE Reporting Requirements, and (F), Certification of Continuing EEO Efforts, are deleted and not replaced.

105.11 Other Federal Requirements

This Subsection is deleted in its entirety and not replaced.

The following Subsection is added:

105.12 Limitations of Operations

The Contractor shall keep the existing shoulder clear of construction activity except for the period of shoulder reconstruction. The Contractor shall not park or store construction equipment, vehicles, or materials on the shoulder. Construction vehicles shall not enter the mainline travel lane until they can safely merge with the traffic in the travel lane. The construction access shall be in accordance with the details in the Plans. The Resident must approve all shoulder closures.

Existing drainage shall be maintained at all times. All ditches that discharge into wetlands shall have a series of stone check dams installed in the ditch near the outlet prior to the commencement of clearing activities in the area.

SECTION 106 – QUALITY

106.3.3 Sources

Paragraph A, General, is amended by the addition of the following:

Preference in the purchase of supplies and materials, other considerations being equal, shall be given in favor first of supplies and materials manufactured and sold within the State of Maine, and second, of supplies and materials manufactured within the United States. Materials and supplies sold outside the United States will be considered third in the preference order.

106.3.4 Storage

This Subsection is amended by the addition of the following:

The Contractor shall be responsible for the security of all storage areas. Materials and supplies that are stolen, damaged or otherwise made unacceptable while in storage shall be replaced in kind at the Contractor's own expense.

106.3.7 Sampling and Testing

The forth paragraph is deleted in its entirety and not replaced.

106.6 Acceptance

All paragraphs after the first paragraph are deleted and not replaced.

106.8.3 Unauthorized Work

The following paragraphs are added:

No omission or failure on the part of the Resident to disapprove or reject any Work or material shall be taken to be an acceptance of any defective Work or material. Within the time set by the Resident, the Contractor shall remove any Work or material condemned by the Resident and shall rebuild and replace the same without extra compensation and in default thereof the removal and replacement may be done by the Authority at the expense of the Contractor; or, in case the Resident should not consider the defect of sufficient importance to require the Contractor to rebuild or replace any imperfect Work or material, he shall have power, and is hereby authorized, to make an equitable deduction from the Contract price.

Materials which do not conform to the requirements of these Specifications shall be considered as defective and will be rejected, whether in place or not, and shall be removed from the Project. No material which has been rejected, the defects of which have been corrected or removed, shall be used until approved by the Resident in writing.

SECTION 107 – TIME

The following Subsection is added:

107.1.1 Substantial Completion

An 80 percent reduction of retainage will be considered by the Authority when the Project is substantially complete. The Contractor shall include an explanation of the outstanding Work, an estimate of the cost to complete the Work, and a schedule for completing the Work. Seasonal limitations as well as warranty and establishment periods (for vegetation) shall be addressed.

107.3.1 General

This Subsection is amended as follows:

See related Subsection 101.2, Definitions: Holidays.

Work that impacts traffic may be subjected to further restrictions. See related Special Provision Section 652.

107.3.2 Night Work

This Subsection is amended by the addition of the following:

- The Maine Turnpike encourages the Contractor to construct the Project cost effectively while maintaining quality and conformance with all Federal, State and local laws. To facilitate this process, the Maine Turnpike recognizes that the Contractor may choose to construct portions of the Project at night.
- The following is a partial list of activities that would be favorably considered for night construction. The final determination of applicability by the Authority will be based on the Contractor's plan of operation. The Contractor shall demonstrate that the Work can be accomplished in conformance with the appropriate regulations.

Highway Related Work

- Installation and removal of traffic control devices (drums, concrete barrier, impact attenuators)
- Installation and removal of painted pavement markings
- Placement of pavement
- Sawcutting of pavement
- Installation and removal of guardrail

Bridge Related Work

- Delivery of materials (except oversize loads)
- Placement and removal of pier forms
- Shielding of old and new bridge
- Installation and removal of deck and diaphragm forms
- Installation and removal of overhang brackets
- Field painting and preparation of damaged paint areas
- Application of penetrating sealers
- Installation of sign panels on sign bridges

107.3.3 Sundays and Holidays

This Subsection is amended by the addition of the following:

"Saturday" is added before Sunday.

Requests to work outside of the allowable periods must be submitted in writing and approved by the Resident prior to the start of Work. Approval for Work, that in the Authority's opinion will not significantly impact traffic flow, will not be unreasonably withheld.

107.4.2 Schedule of Work Required

This Subsection is amended by the addition of the following:

No Pay Requisition will be approved for payment until the schedule requirement is fulfilled and accepted by the Maine Turnpike Authority.

In addition to the Schedule required hereinbefore, the Contractor shall submit, no later than 12:00-noon every Thursday, a detailed plan of his operations for the following week. This plan shall show the type of Work to be done and the traffic lanes that are to be impacted. This updated plan will be used by the Resident to schedule the appropriate resources and inform other interested parties of the proposed Work.

107.4.4 Schedule Revisions

This Subsection is amended by the addition of the following:

The progress of Work shall be compared against the Schedule of Work at a job meeting once every month. If the Authority determines that the Contractor's actual progress is not in substantial conformity with the Schedule of Work, then the Contractor shall submit a revised Schedule of Work to the Authority depicting the increased or decreased variations in activity durations and milestones as compared to previously submitted schedule(s). If noted in the meeting minutes, or directed in writing by the Resident, the Contractor shall submit a revised Schedule to the Authority within one week of the request. If a revised realistic Schedule is not received within one week of the request, the monthly pay requisition will be withheld. Failure to modify completion dates without a commitment to modify Project resources shall be deemed an unrealistic Schedule unless the particular activity had adequate float.

107.7.2 Schedule of Liquidated Damages

The table of liquidated damages is deleted and replaced with the following:

Original Contract Amount From More Than	Original Contract Amount up to and Including	Amount of Liquidated Damages per Calendar Day
$0	$100,000	$100
$100,000	$300,000	$200
$300,000	$500,000	$400
$500,000	$1,000,000	$575
$1,000,000	$2,000,000	$750
$2,000,000	$4,000,000	$900
$4,000,000	and more	$1,875

This Subsection is amended by the addition of the following:

At the option of the Authority, the Contractor may be held responsible for all costs incurred by the Authority which are due to any Work that remains incomplete after the time specified for the completion of the Contract, in addition to the daily calendar day charge.

107.9.1 Final Clean-up and Finishing

This Subsection is amended by the addition of the following:

No separate payment will be made for final clean-up and restoration of property, but the cost thereof shall be included in the prices bid for the various items scheduled in the Proposal.

SECTION 108 - PAYMENT

108.1 Measurement of Quantities for Payment

This Subsection is amended by the addition of the following:

The quantities in the Schedule of Items are the approximate totals. The breakdown of quantities for various locations is approximate and is for information only. No change in the bid price will be considered for changes in the actual quantities at each location except as provided for in Subsection 109.1, Changes in Quantities.

108.1.2 General Measurement Provisions

The first sentence is deleted and replaced with the following:

The Maine Turnpike Authority will utilize the U.S. Customary system for all units of measurement.

108.1.3 Provisions Relating to Certain Measurements

This Subsection is amended by the addition of the following:

No allowance will be made for surface laid over a greater area than indicated on the Plans or otherwise authorized, or for excavation removed or embankment placed beyond the slope lines shown on the cross-sections, except as otherwise specifically noted or authorized by the Resident in writing.

108.2.1 Generation of Progress Payment Estimates

The first paragraph is deleted and replaced with the following:

The Resident will make current estimates in writing once each month, on or before the date set by the Resident at the time of starting Work, or from time to time as the Work progresses. Progress payments twice per month will not be allowed. The estimate shall include all materials complete in place and the amount of Work performed in accordance with the Contract, during the preceding month or period and the value thereof figured at the unit prices contracted together with estimates of the cost of Extra Work performed during the same period. Estimates or payments will not be made, if in the opinion of the Resident, the Work is not proceeding in accordance with the provisions of the Contract. The Contractor agrees to waive all claims relating to the timing and amount of such estimates.

108.2.2 Payment

The first two sentences are deleted and replaced with the following:

The Maine Turnpike Authority will make payment within 30 days of Contractor and Resident concurrence of progress payment.

108.2.3 Mobilization Payments

The second paragraph is deleted and replaced with the following:

A. The first payment of 50 percent of the lump sum price for mobilization or five percent of the original Contract Amount, whichever is less, will be made with the first monthly estimate.

B. The second payment of 25 percent of the lump sum price for mobilization or 2.5 percent of the original Contract Amount, whichever is less, will be made following completion of 25 percent of the proposed Contract Amount.

C. The third payment of 25 percent of the lump sum price for mobilization or 2.5 percent of the original Contract Amount, whichever is less, will be made following completion of 50 percent of the proposed Contract Amount.

D. Upon substantial completion of the Work on the Project, as determined by the Resident, payment of any amount bid for mobilization in excess ten percent of the original Contract Amount will be paid.

All payments are subject to standard retainage.

Demobilization will not be measured separately for payment, but shall be incidental to Item 659.10, Mobilization.

108.3 Retainage

This Subsection is deleted and replaced with the following:

From the total of the amounts so ascertained there will be deducted an amount equivalent to 7.5 percent of the whole, to be retained by the Authority until after the completion of the entire Contract in an acceptable manner, and the balance, or a sum equivalent to 92.5 percent of the whole shall be certified by the Resident to the Authority for payment.

If it became evident, on the basis of approved progress schedules, or otherwise, that the completion date for the Contract will not be met, the Authority reserves the right to retain the amount of the liquidated damages which have apparently accumulated, in addition to 7.5 percent of the value of the Work done to date.

If at any time there shall be evidence of any lien or claim for which, if established, the Authority might become liable and which is chargeable to the Contractor, the Authority shall have the right to retain out of any payment, then due or thereafter to become due, an amount sufficient to completely indemnify the Authority against such lien or claim.

If the Contractor elects to furnish to the Authority a surety bond in the amount of twice the amount of all liens or claims pending against the Contractor, then the Authority will not exercise the aforementioned right to make retention out of payments on account of such liens or claims.

The payment of any current estimates or of any retained percentages shall in no way affect the obligations of the Contractor to repair or renew any defective parts of the construction and to be responsible for all damage due to such defect.

All material estimates and payments shall be subject to correction in subsequent partial estimates and payments and on the final estimate and payment.

108.4 Payment for Materials Obtained and Stored

The first paragraph is amended as follows:

In the second sentence, the words "...Delivered on or near the Work site at acceptable storage places." are deleted and not replaced.

108.4.1 Price Adjustment for Hot Mix Asphalt

This Subsection is deleted and replaced with the following:

For Contracts containing an excess of 5,000 tons of bituminous pavement, an asphalt price adjustment will be made for all bituminous concrete placed six (6) months after the bid date of the Contract. No asphalt price adjustment will be allowed for Contracts containing less than 5,000 tons. For Contracts containing more than 5,000 tons, no adjustment will be made for asphalt placed at any time within six months of the bid date.

Price adjustment will be based on the variance in cost for the performance-graded binder component of the hot mix asphalt. The quantity of hot mix asphalt for each pay item will be multiplied by performance graded binder given in the table below, times the difference in price in excess of ten percent between the base price and the period price of asphalt cement. Adjustments will be made upward or downward, as prices increase or decrease. The quantity of Hot Mix Asphalt will be determined from the quantity shown on the progress estimate for each pay period. The base price of performance graded binder to be used is the price per standard ton current with the bid opening date. The period price shall be determined by the Authority and shall be the price per standard ton current with the ending date of the progress estimate. The prices shall be determined by using the average N.E. Barge Price, FOB, as listed in the Asphalt Weekly Monitor.

Plant Mix B Pavement	4.0%
Hot Bituminous Pavement Grading B	4.5%
Hot Bituminous Pavement Grading C	5.5%
Hot Bituminous Pavement Grading D	5.5%
Hot Bituminous Pavement Grading E	5.5%

108.5 Right to Withhold Payment

This Subsection is amended by the addition of the following:

L. Contractor's failure to, or refusal to, remove within 24-hours after receipt of proper notice, any employee or person engaged in Work under Contract.

M. Contractor's failure to submit required schedule or schedule updates.

108.6 Taxes, Fees, Allowances, and Notices

This Subsection is amended by the addition of the following:

The Maine Turnpike Authority, an agency of the State of Maine, is exempt from payment of sales tax, under the present Maine Sales Tax Law, on any property purchased by it at retail for consumption. The Maine Tax Bureau has interpreted this to mean that all materials purchased by the Contractor which ultimately remain the property of the Maine Turnpike Authority, even though in a changed form, are not subject to the sales tax.

108.8 Final Payment

This Subsection is amended by the addition of the following:

Before final payment is made, the Contractor shall furnish to the Authority, on the forms prescribed (Sheet F-1), a sworn affidavit to the effect that no claims are pending. If such affidavit that claims have been paid cannot be given because of a dispute as to the amount or legality of such claim, the Contractor's affidavit shall clearly set out the facts as to the name, address, amount, and nature of the dispute. The Authority will review the matter and will make payment that the Authority deems is appropriate to the Contractor.

SECTION 109 – CHANGES

109.1.1 Changes Permitted

The following is added to the end of the paragraph:

There will be no adjustment to Contract Time due to an increase or decrease in quantities, compared to those estimated, except as addressed through Contract Modification(s).

109.1.2 Substantial Changes to Major Items

The following is added to the end of the paragraph:

Contract Time adjustments may be made for substantial changes to Major Items when the change affects the Critical Path, as determined by the Authority.

109.3 Extra Work

The following paragraphs are added:

No Extra Work shall be performed except pursuant to the written orders of the Resident, expressly and unmistakably indicating its intention to treat the Work described therein as Extra Work.

If the Contractor determines that Work directed by the Resident is Extra Work, he shall, within 48-hours, give written notice thereof to the Resident stating why he deems it to be Extra Work and shall furnish to the Resident daily time slips and memoranda for the purpose of affording to the Authority an opportunity to verify the Contractor's claim at the time and (if it desires to do so) cancel promptly such order, direction or requirement of the Resident.

Accordingly, the failure of the Contractor to serve such notice or to furnish such time slips and memoranda shall be deemed to be a conclusive and binding determination on his part that the direction,

order or requirement of the Resident does not involve the performance of Extra Work, and shall be deemed to be a waiver by the Contractor of all claims for additional compensation or damages by reason thereof.

Refer to related Subsections 104.4.2, Preconstruction Conference, and 109.7.5, Force Account Work.

109.4 Differing Site Conditions

109.4.1 Definition

This Subsection is amended by the addition of the following:

Paragraph (A) is the definition of Differing Site Conditions. Paragraphs (B), (C) and (D) are not all required along with Paragraph (A) to prove Differing Site Conditions. However, they will be considered by the Maine Turnpike Authority as part of the evaluation of Differing Site Conditions. See related Subsection 102.3, Examination of Documents, Site, and Other Information.

109.4.4 Investigation / Adjustment

This Subsection is amended as follows:

In the third sentence, delete the words "Subsections (A) - (E)".

109.5.1 Definitions - Types of Delays

This Subsection is amended as follows:

B. Compensable Delay -

Replace (1) with the following:

1(A) a weather related Uncontrollable Event of such an unusually severe nature that a Federal Emergency Disaster is declared. The Contractor will only be entitled to an Equitable Adjustment if the Project falls within the geographic boundaries prescribed under the disaster declaration.

1(B) a weather related Uncontrollable Event of such an unusually severe nature that the Contractor's critical path schedule is disrupted.

109.5.2 Entitlement to Adjustments

This Subsection is amended as follows:

A. Types of Adjustments -

Paragraph 2. is deleted and replaced with the following:

2. If a Compensable Delay 1(A), (2), or (3), the Contractor is entitled to an extension of time and an equitable adjustment as set forth in Subsection 109.7, Equitable Adjustment to Compensation. If a Compensable Delay 1(B), the Contractor is entitled to an extension of time and an equitable adjustment as set forth in Subsection 109.7, Equitable Adjustment to Compensation, except that Cost of extended jobsite overhead and time will not be allowed.

109.5.5 Documenting the Delay and Request for Adjustments

The last paragraph is deleted and replaced with the following:

The Authority may require that all cost shown in the report be certified by an accountant.

109.5.6 Decision by Program Manager

This Subsection is deleted and not replaced.

Refer to related Subsection 104.4.2, Preconstruction Conference.

109.5.7 Additional Consideration by Department

This Subsection is deleted and not replaced.

Refer to related Subsection 104.4.2, Preconstruction Conference.

109.6.1 Overview - General Requirements

This Subsection is amended by the addition of the following:

The Maine Turnpike will not participate in any costs borne by the Contractor that are not in accordance with Maine Turnpike policies. All money paid to a business or resident as compensation for impacts created by the Contractor's operation will not be reimbursed by the Authority. All Contractor costs must be documented. Monies paid by the Contractor to others must be documented by a receipt for the cost to be considered as part of the VECP. Copies of all receipts shall be submitted to the Resident.

109.7.2 Basis of Payment

This Subsection is deleted in its entirety and replaced with the following:

Equitable Adjustments will be established by mutual Agreement for compensable items listed in Subsection 109.7.3, Compensable Items, based upon Unit or Lump Sum Prices. If Agreement cannot be reached, the Contractor shall accept payment on a Force Account basis as provided in Subsection 109.7.5, Force Account Work, as full and complete compensation for all Work relating to the Equitable Adjustment.

109.7.3 Compensable Items

This Subsection is deleted and replaced with the following:

The Contractor is entitled to compensation for the following items, with respect to agreed upon Unit or Lump Sum Prices:

1. Labor expenses for non-salaried workers and salaried foremen.

2. Costs for Materials.

3. A markup on the totals of Items 1 and 2 of this Subsection (109.7.3) for home office overhead and profit of the Contractor, its Subcontractors and suppliers, and any lower tier Subcontractors or suppliers, with no mark-ups on mark-ups.

4. Cost for Equipment, based on Blue Book Rates or leased rates, as set forth in Subsection 109.7.5(C), or the Contractor's Actual Costs.

5. Costs for extended jobsite overhead.

6. Time.

7. Subcontractor quoted Work, as set forth below in Subsection 109.7.5, Force Account Work.

109.7.5 Force Account Work

This Subsection is amended by the addition of the following:

C. Equipment

When the Contractor is paid for furnishing and operating equipment on an hourly or daily basis, it shall be operated as approved by the Resident in such a manner as to obtain maximum production under the prevailing conditions. The Resident may order the removal and require replacement of any unsatisfactory equipment.

The first sentence of the second paragraph, which begins: "Equipment leased...", is deleted.

The second sentence of the sixth paragraph is changed from "The Contractor may furnish..." to read "If requested by the Authority, the Contractor will produce cost data to assist the Authority in the establishment of such rental rate, including all records that are relevant to the Actual Costs including rental Receipts, acquisition costs, financing documents, lease Agreements, and maintenance and operational cost records."

The following sentence is added:

Equipment leased by the Contractor for Force Account Work and actually used on the Project will be paid for at the actual invoice amount plus 10 percent markup for administrative costs.

The following sentence is added:

F. Subcontractor Quoted Work - When accomplishing Force Account Work that utilizes Subcontractor quoted Work, the Contractor will be allowed a maximum markup of five percent for profit and overhead.

SECTION 110 - INDEMNIFICATIONS, BONDING AND INSURANCE

110.2.1 Bonds

The first three paragraphs are deleted and replaced with the following:

The Bidder to whom the Contract is awarded shall furnish a Surety Corporation Bond, satisfactory to the Authority, on the form of the Contract Bond bound herewith, as security for the faithful performance of the Work. The Contract Bond must be executed or countersigned on the part of such Surety by the Resident Agent of the Surety for the State of Maine.

The Bond shall be in an amount not less than the Total Amount bid in the Proposal and shall be maintained by the Contractor until the final payment under the Contract is made. In the event of insolvency

of the Surety, the Contractor shall forthwith furnish and maintain as above provided, other security satisfactory to the Authority.

If the Contractor is unable to continue the Work, then the completion of the Contract shall be the sole responsibility of the Surety. The Surety shall assume the role of and become the Contractor. Work shall not commence until the Authority has approved, in writing, the Subcontractor's employed by the Surety. All Work to complete the Contract will be paid for at Contract bid prices as shown on the Proposal bid sheets. All payments made by the Authority will be paid directly to the Surety who in turn will then pay the Subcontractors and suppliers. Regardless of the amounts previously paid to the Contractor as Progress Estimates for Work reported to have been put in place by the Contractor or his Subcontractors, the full Scope of the Contract Work shall be completed by the Surety and its designates for compensation not to exceed the Contract Price less the aggregate of prior payments to the Contractor.

110.2.3 Bonding for Landscape Subcontractors

This Subsection is deleted and replaced with the following:

110.2.3 Bonding for Landscape Establishment Period

The Contractor shall provide a signed, valid, and enforceable Performance, Warranty, or Maintenance Bond complying with the Contract, to the Department at Final Acceptance.

The Bond shall be in the full amount for all Pay Items for Work pursuant to Section 621, Landscape, made payable to the Maine Turnpike Authority.

The Contractor shall pay all premiums and take all other actions necessary to keep said Bond in effect for the duration of the Landscape Establishment Period as described in Special Provision 621.0036, Establishment Period. If the Surety becomes financially insolvent, ceases to be licensed or approved to do business in the State of Maine, or stops operating in the United States, the Contractor shall file new Bonds complying with this Subsection and within 10 days of the date the Contractor is notified or becomes aware of such change.

All Bonds shall be procured from a company organized and operating in the United States, licensed or approved to do business in the State of Maine by the State of Maine Department of Business Regulation, Bureau of Insurance, and listed on the latest Federal Department of the Treasury listing for "Companies Holding Certificates of Authority as Acceptable Sureties on Federal Bonds and as Acceptable Reinsuring Companies."

By issuing a Bond, the Surety agrees to be bound by all terms of the Contract, including those related to payment, time for performance, quality, warranties, and the Department's self help remedy as provided in Subsection 112.1, Default, to the same extent as if all terms of the Contract are contained in the Bond(s).

Regarding claims related to any obligations covered by the bond, the Surety shall provide, within 60 Days of Receipt of written notice thereof, full payment of the entire claim or written notice of all bases upon which it is denying or contesting payment. Failure of the Surety to provide such notice within the 60-day period constitutes the Surety's waiver of any right to deny or contest payment and the Surety's acknowledgment that the claim is valid and undisputed.

110.3 Insurance

This Subsection is amended by the addition of the following:

Each policy shall be signed by the President and Secretary of the insurance company and shall be countersigned by a licensed Resident Agent of the State of Maine as an authorized representative of the company.

Before Work is commenced pursuant to the Agreement, the Contractor shall file with the Authority a Certificate of Insurance, executed by an insurance company or companies satisfactory to the Authority and licensed or approved by the State of Maine Department of Business Regulation, Bureau of Insurance to do business in the State of Maine, stating that the Contractor carries insurance in accordance with the requirements of the Contract.

If at any time, any of the said policies shall be or become unsatisfactory to the Authority, the Contractor shall promptly obtain new and satisfactory policies and furnish certificates therefor as required above. All policies shall contain a valid provision or endorsement providing that the insurance company will notify the Authority in writing at least thirty (30) days prior to the termination of any policy or before any changes are made in any policies. The policy shall also indicate which exclusions have been deleted and any additional coverages.

Neither approval by the Authority, nor a failure to disapprove insurance furnished by a Contractor, shall release the Contractor of full responsibility for liability, damages and accidents as set forth herein.

No separate payment shall be made for any insurance that the Contractor may be required to carry, but all costs thereof shall be included in the prices bid for the various items scheduled in the Proposal.

The following Subsection is added:

110.3.05 Umbrella Liability

An Umbrella Liability Policy in excess of Employer's Liability, General Liability, and Automobile Liability shall be provided with a limit of $4,000,000.

110.3.2 Commercial General Liability

This Subsection is amended by the addition of the following:

Where the Work to be performed has to do with railroads, then railroad Protective Liability Insurance shall be provided, with the Maine Turnpike Authority as a named insured.

The Contractual Liability Insurance shall cover the Contractor's obligation to indemnify the Authority as provided in Subsection 110.1, Indemnification.

110.3.4 Professional Liability

The first sentence is deleted and replaced with the following:

Contractors who engage in design Work, preliminary engineering Work, and environmental consulting Work for the Authority shall maintain a Professional Liability policy for errors and omissions with a minimum limit of liability of $5,000,000. The Authority reserves the right to require increased insurance limits for certain major Projects.

110.3.5 Owner's and Contractor's Protective Liability

This Subsection is deleted and replaced with the following:

For Projects with a Contract price in excess of $500,000, an "Owner's Protective" policy in the name of the Maine Turnpike Authority, with a $5,000,000 limit, shall also be provided.

110.3.6 Builder's Risk Insurance

This Subsection is amended by the addition of the following:

The Contractor shall provide Builder's Risk Insurance if the Project requires it. This determination will be made by the Authority and shall be so stated in the Special Provisions. The insurance coverage shall be shown on a special form and provide for transient and off-premise coverage and materials intended for use at the Project site. Any exclusion related to design, materials, or workmanship shall not apply to resulting damage.

110.3.8 Administrative and General Provisions

A. Additional Insured

This paragraph is deleted and replaced with the following:

Each policy, with the exception of Workers' Compensation and Professional Liability Insurance, shall name the Authority as an additional named insured. The Maine Turnpike Authority Contract Number shall be clearly stated on each policy.

SECTION 111 - RESOLUTION OF DISPUTES

111.1.2 Escalation Process

This Subsection is deleted and replaced with the following:

To resolve Issues and Disputes, the Contractor and the Maine Turnpike Authority will develop a Decision Matrix at the preconstruction or partnering meeting. See related Subsection 104.4.2, Preconstruction Conference. If an issue is not resolved, the matter becomes a Dispute and is eligible for settlement by an Alternate Dispute Resolution (ADR) process as outlined in this Section. Either the Authority or the Contractor may request an ADR process. If a Contractor is dissatisfied with an ADR recommendation, the decision may be appealed to the MTA Executive Director. A decision by the MTA Executive Director may be appealed to either Mediation or Arbitration. All costs of ADR, including Neutral Evaluations, Dispute Review Boards (DRBs), Mediation or Arbitration shall be shared equally.

ALTERNATIVE DISPUTE RESOLUTION

Preliminary ADR:

The purpose of the optional use of ADR is to assist the consenting parties to resolve disputes in a manner that complies with the Contract, that is fair, impartial, less expensive, faster and less formal than litigation. A Project issue becomes a Dispute eligible for ADR only when mutually acceptable resolution can not be achieved within the Decision Matrix-prescribed time period at the level of the Authority's Chief Operating Officer (COO), and the Contractor's Principal.

The Contractor and the Authority shall select a mutually acceptable form of Preliminary ADR from the following options, with the preference expressed in the order of listing.

1. NEUTRAL EVALUATION: Jointly selected by the disputing parties, the Neutral would conduct a third party, neutral investigation of both sides of the dispute, resulting in the submission of a Report of Recommended Settlement to the disputing parties.

2. DISPUTE REVIEW BOARD (DRB): The parties would jointly select two to three mutually acceptable experts who would hear and weigh a presentation of positions and evidence by the parties; resulting in the issuance by the DRB of a Recommended Settlement of the matter.

Recommendations by either a Neutral or a DRB will be non-binding unless the parties mutually agree in writing at the time of process selection that such recommendations will be binding.

Appeal to the Executive Director:

If either party rejects a recommendation resulting from ADR, the Dispute may be appealed to the Executive Director of the Authority. Once a dispute has been submitted to ADR, no party shall discuss the elements of the dispute with the Executive Director.

Final ADR - Mediation or Arbitration:

At the request of the Contractor, appeal decisions rendered by the Executive Director may be appealed by the Contractor to a Final ADR process of either Mediation or Arbitration. The costs of Mediation or Arbitration shall be borne equally by the Contractor and the Authority. Decisions by either a Mediator or an Arbitrator(s) will be non-binding unless the parties mutually agree in writing at the time of process selection that such recommendations will be binding.

NOTE: It is the intent of this Specification to retain maximum flexibility for the specific procedures for either Preliminary or Final Alternative Dispute Resolution. The processes shall follow the guidelines of construction industry ADR practices in general. The Authority and the Contractor will contribute equal input to the selection of location, methods, experts and timing of such processes. When a Dispute Review Board is utilized, the Authority and the Contractor shall have equal veto power in the selection of DRB composition.

111.1.8 Commissioner Communications Before Appeal

This Subsection is deleted and not replaced.

111.2 Project Level Negotiation to 111.6 Judicial Review

These Subsections (inclusive) are deleted and not replaced.

SECTION 112 - DEFAULT AND TERMINATION

112.2 Termination

This Subsection is amended by the addition of the following:

When the Contract is terminated, the Contractor shall, if so required by the Authority, promptly remove any or all of his/her equipment and supplies from the Project site or from other property of the

Authority, failing which the Authority may remove such equipment and supplies at the expense of the Contractor.

SECTION 203 - EXCAVATION AND EMBANKMENT

203.01 Description

The following is added at the end of the last paragraph:

Unclassified bids are submitted at the sole risk of the Bidder. The Contractor shall only be entitled to compensation at the unit prices submitted for the actual quantity of Common Excavation and Rock Excavation. No additional compensation shall be considered for changes from the estimated quantities to the actual quantities regardless of the reason for the change.

203.18 Method of Measurement

The seventh paragraph is amended as follows:

Elevations for final cross sections shall be determined as shown and calculated on the Plans. Measurements shall be determined at the bottom of loam line unless otherwise noted.

SECTION 502 - STRUCTURAL CONCRETE

502.10 Forms and False Work

D. Removal of Forms and False Work

The first paragraph is amended as follows:

In the first, second, and third sentences, "forms and false work" are replaced with "forms".

502.11 Placing Concrete

G. Concrete Wearing Surface and Structural Slabs on Precast Superstructures

The last paragraph is amended as follows:

In the third sentence, replace "The temperature of the concrete shall not exceed 24°C [75°F] at the time of placement." with "The temperature of the concrete shall not exceed 24°C [75°F] at the time the concrete is placed in its final position."

502.15 Curing Concrete

The first paragraph is amended as follows:

The first sentence is replaced with: "All concrete surfaces shall be kept wet with clean, fresh water for a curing period of at least seven (7) days after concrete placing, with the exception of vertical surfaces as provided for in Subsection 502.10 (D), Removal of Forms and False Work.

The second paragraph is amended as follows:

The first two sentences are deleted.

The third paragraph is amended as follows:

The entire paragraph, which starts "When the ambient temperature....", is deleted.

The fourth paragraph is amended as follows:

Delete "approved" to now read "...continuously wet for the entire curing period…".

The fifth paragraph is amended as follows:

The second sentence is changed from "...as soon as it is possible to do so without damaging the concrete surface." to: "...as soon as possible."

The seventh paragraph is amended as follows:

The first sentence is changed from "...until the end of the curing period." to "...until the end of the curing period, except as provided for in Subsection 502.10(D), Removal of Forms and False Work."

SECTION 503 - REINFORCING STEEL

503.06 Placing and Fastening

The second paragraph is amended as follows:

The third sentence is changed from "All tack welding shall be done in accordance with Section 504, Structural Steel." to "All tack welding shall be done in accordance with AWS D1.4, Structural Welding Code - Reinforcing Steel."

SECTION 504 - STRUCTURAL STEEL

504.09 Facilities for Inspection

The following is added to the last paragraph:

Failure to comply with the above requirements will be consider to be a denial to allow access to Work by the Contractor. The Department will reject any Work done when access for inspection is denied.

504.18 Plates for Fabricated Members

The second paragraph is amended as follows:

The first sentence is changed from "…ASTM A 898/A 898 M..." to "...ASTM A 898/A 898 M or ASTM A 435/A 435 M as applicable and...".

504.31 Shop Assembly

The following is added to the last sentence:

The minimum assembly length shall include bearing centerlines of at least two substructure units.

SECTION 535 - PRECAST, PRESTRESSED CONCRETE SUPERSTRUCTURE

535.02 Materials

"Steel Strand for Concrete Reinforcement" is changed to "Steel Strand."

The following is added to the beginning of the third paragraph:

Concrete shall be Class P conforming to the requirements in this Subsection. Twenty-eight day compressive strength shall be as stated on the Plans. Coarse aggregate...

535.05 Inspection Facilities

The following is added to the last paragraph:

Failure to comply with the above requirements will be considered to be a denial to allow access to Work by the Contractor. The Department will reject any Work done when access for inspection is denied.

535.26 Lateral Post-Tensioning

The first paragraph is replaced with the following:

Overstressing strands for setting losses cannot be accomplished for chuck to chuck lengths of 7.6 m [25 feet] and less. In such instances, refer to the Plans for all materials and methods. Otherwise, post-tensioning shall be in accordance with PCI standards and shall provide the anchorage force as noted in the Plans. The applied jacking force shall be no less than 100 percent of the design jacking force.

SECTION 603 - PIPE CULVERTS AND STORM DRAINS

603.0311 Corrugated Polyethylene Pipe for Option III

Minimum Mandrel Diameter Table is replaced with the following:

Nominal Size US Customary (in)	Minimum Mandrel Diameter (in)	Nominal Size Metric (nun)	Minimum Mandrel Diameter (mm)
12	11.23	300	280.73
15	14.04	375	350.91
18	16.84	450	421.09
24	22.46	600	561.45
30	28.07	750	701.81
36	33.69	900	842.18
42	39.30	1050	982.54
48	44.92	1200	1122.90

SECTION 604 - MANHOLES, INLETS, AND CATCH BASINS

604.02 Materials

The following are added:

Tops and Traps 712.07

Corrugated Metal Units	712.08
Catch Basin and Manhole Steps	712.09

SECTION 605 - UNDERDRAINS

605.05 Underdrain Outlets

The first paragraph is amended as follows:

In the second sentence, the words "metal pipe" are deleted.

SECTION 606 - GUARDRAIL

606.02 Materials

The fourth paragraph, which reads "Retroreflective beam guardrail delineators..." is deleted and replaced with the following:

Reflectorized sheeting for Guardrail Delineators shall meet the requirements of Subsection 719.01, Reflective Sheeting. Delineators shall be fabricated from high-impact, ultraviolet and weather resistant thermoplastic.

The eighth paragraph, which reads "The sole patented supplier of multiple mailbox..." is deleted and replaced with the following:

Acceptable multiple mailbox assemblies shall be listed on the Department's Approved Products List and shall be NCHRP 350 tested and approved.

606.09 Basis of Payment

The second and third sentences in the first paragraph are deleted in their entirety and replaced with the following:

Butterfly-type guardrail reflectorized delineators shall be mounted on all W-beam guardrail at an interval of every 10 posts [62.5 feet] on tangents sections and every five posts [31.25 feet] on curved sections as directed by the Resident. On divided highways, the delineators shall be yellow on the left hand side and silver/white on the right hand side. On two-way roadways, the delineators shall be silver/white on the right hand side. All delineators shall have retroreflective sheeting applied to only the traffic facing side. Reflectorized guardrail delineators will not be paid for directly, but will be incidental to the guardrail items.

SECTION 615 - LOAM

615.02 Materials

This Subsection is amended as follows:

One hundred percent of the loam material must pass the two inch sieve.

Organic Content	Percent by Volume
Humus	"5% - 10%", as determined by Ignition Test

SECTION 618 - SEEDING

618.01 Description

The first sentence is amended to read:

This Work shall consist of furnishing and applying seed.

The words “and cellulose fiber mulch” are deleted from 618.01(a).

618.03 Rates of Application

The last sentence in 618.03(a) is deleted and replaced with the following:

These rates shall apply to Seeding Method 2, 3, and Crown Vetch.

In 618.03(c), "1.8 kg [4 lb]/unit." is deleted and replaced with "1.95 kg [4 lb]/unit."

618.09 Construction Method

In 618.09(a) 1, sentence two, "100 mm [four inches]" is replaced with "25 mm [one inch] (Method 1 areas) and 50 mm [two inches] (Method 2 areas)".

618.15 Temporary Seeding

The Pay Unit is changed from “Unit” to “Kg [lb]”.

SECTION 620 - GEOTEXTILES

620.03 Placement

Section (c): Replace "Non-woven" in title with "Erosion Control".

The word "Non-woven” in the first paragraph is replaced with "Woven monofilament”.

The word "Non-woven" in the second paragraph is replaced with "Erosion Control".

620.07 Shipment, Storage, Protection and Repair of Fabric

Section (a): the second sentence is replaced with the following:

Damaged geotextiles, as identified by the Resident, shall be repaired immediately.

620.09 Basis of Payment

Pay Item 620.58: "Non-woven" is replaced with "Erosion Control".

Pay Item 620.59: "Non-woven" is replaced with "Erosion Control".

SECTION 621 - LANDSCAPING

621.0036 Establishment Period

In the fourth and fifth paragraphs, "time of Final Acceptance" is replaced with "end of the period of establishment".

In the seventh paragraph, "Final Acceptance date" is replaced with “end of the period of establishment”; and "date of Final Acceptance" is replaced with "end of the period of establishment".

SECTION 626 - HIGHWAY SIGNING

626.034 Concrete Foundations

The following is added to the end of the second paragraph:

Pre-cast and cast-in-place foundations shall be warranted against leaning and corrosion for two years after the Project is complete. If the lean is greater than two degrees from normal or the foundation is spalling within the first two years, the Contractor shall replace the foundation at his own cost.

SECTION 639 - ENGINEERING FACILITIES

639.04 Field Offices

This Subsection is amended by the addition of the following:

The Field Office location shall be approved by the Resident and shall be provided when the Contract starts and shall remain until the Contract is complete. The Contractor shall be responsible for furnishing and maintaining electricity, heat, facsimile machine and appliances for the entire duration of the Contract, which includes periods of time which Work has been suspended.

The Contractor shall provide a plain paper (8-1/2” x 11”) fax/copier machine with a 10 page (minimum) auto document feeder, 15 page (minimum) fax memory, 50 sheet (minimum) paper capacity, and a transmission speed of six pages (minimum) per minute for the Resident's use during the Project. All maintenance and supplies shall be the responsibility of the Contractor. The fax machine shall be connected to a separate telephone line so that the fax machine operates independent of the telephone and answering machine. A total of three phone lines shall be provided by the Contractor. All of the costs associated with the above shall be the responsibility of the Contractor except for the monthly telephone charges.

The following are not required:

- Accessible route conforming to the Americans with Disabilities Act
- Wheelchair accessible toilet

639.09 Telephone

This Subsection is amended as follows:

The Contractor shall be reimbursed at cost for the monthly telephone service charges. Telephone service shall remain throughout the Contract including periods of seasonal shutdowns.

639.11 Basis of Payment

The following is added after the first paragraph:

The Contractor shall be reimbursed at cost for the monthly telephone service charges. No additional markup will be allowed. The Contractor shall submit copies of the monthly bills to the Resident for payment.

SECTION 652 - MAINTENANCE OF TRAFFIC

652.2 Materials

The first sentence in the second paragraph is replaced with the following:

All construction signs shall be fabricated with super high intensity (ASTM 4956 – Type VII) retroreflective sheeting. All construction signs and construction sign packages shall have the Type VII sheeting material. 3924 Diamond Grade fluorescent orange sheeting manufactured by 3M conforms to ASTM 4956 – Type VII.

652.2.4 Other Devices

The eighth paragraph is amended by the addition of the following:

The Portable Message Signs shall be capable of being programmed remotely by telephone, of monitoring the speed of traffic in a travel lane, and of displaying a message in response to a vehicle exceeding an allowable speed threshold. The Contractor shall submit a catalog cut to the Resident for approval, establish a cellular account so that signs may be programmed remotely and provide training for the operation of the sign to the Resident.

The portable-changeable message signs may be moved throughout the Project area as required to provide advance warning of construction operations which may impact the flow of traffic as well used during lane closures to display messages relative to the speed of traffic. The Contractor shall remove, transport and maintain the signs as directed and approved by the Resident.

The Authority will be responsible for the actual programming of the signs.

A deduction will be made from money due the Contractor for signs that fail to operate for extended periods of time.

The following Subsection is added:

652.2.5 Safety Vests

All jobsite personnel shall wear a safety vest labeled as ANSI 107-199 standard performance for Class 2 risk exposure or an equivalent.

652.3.1 Responsibility of the Department

The first paragraph is deleted and replaced with the following:

The Authority will provide Project specific traffic control requirements and traffic control plans for use by the Contractor. The specific traffic control requirements for the Project are identified in Special Provision Section 652, Maintenance of Traffic (Specific Project Maintenance of Traffic Requirements). No

revisions to these requirements or Plans will be permitted unless the Contractor can thoroughly demonstrate an overall benefit to the public and a Contract Modification is approved.

The following sentence is added to the end of this Subsection:

The Maine Turnpike Authority may erect lane closures on the mainline within the Project area to collect survey, provide layout, and for any other reasons deemed necessary by the Resident.

652.3.2 Responsibility of the Contractor

The first paragraph is amended as follows:

The Contractor shall provide continuous and effective traffic control and management for the Project that is appropriate to the means, methods and sequencing allowed by the Contract; and consistent with the Traffic Control Plans and Maintenance of Traffic Specifications. The Contractor is responsible for ensuring a safe environment for the Contract workforce, local road users, and turnpike users; and maintaining the safe efficient flow of traffic through the construction zone at all times during the Contract. The protocols and requirements outlined in the Contract shall be strictly enforced.

The following paragraph is added:

The Contractor shall designate a supervisor to be responsible for the safe placement and maintenance of all traffic control devices. This individual shall be trained to safely install and maintain the devices. The Contractor shall submit to the Resident, in writing, documentation stating that this individual has reviewed and understands the traffic control requirements of the Contract and the Manual of Uniform Traffic Control Devices.

652.3.3 Submittal of Traffic Control Plan

This Subsection is deleted and not replaced.

652.3.4 General

This Subsection is deleted in its entirety and replaced with the following:

Prior to starting any Work on any part of the Project adjacent to or being used by the traveling public, the Contractor shall install the appropriate traffic control devices in accordance with the Plans, Specifications and the latest edition of the Manual of Uniform Traffic Control Devices, Part VI. The Contractor shall continuously maintain the traffic control devices in their proper position, and they shall be kept clean, legible and in good repair throughout the duration of the Work. The Contractor shall correct all problems or violations upon observation by the Contractor or upon notification by the Resident. Failure to correct a problem within one hour of notification during non-working hours or to respond immediately to a problem during Work hours, shall result in a penalty of $150.00 per occurrence. The Resident shall be the sole judge as to the time and response.

No equipment or vehicles of the Contractor, their Subcontractors, or employees engaged in Work on this Contract shall be parked or stopped on lanes carrying traffic, or on lanes or shoulders adjacent to lanes carrying traffic, at any time, except as required by ongoing Work operations. Contractor equipment or vehicles shall never be used to stop, block, or channelize traffic.

Vehicles parked on the shoulder shall be located so all portions of the vehicle(s) are a minimum of one foot from the traveled way. No operation (including loading or unloading vehicles) shall be conducted

on or near the traveled lanes or shoulders without first setting up the proper lane closure and traffic control devices. These precautions shall be maintained at all times while this Work is being performed.

The Contractor shall keep all paved areas of the highway as clear as possible at all times. No materials shall be stored on any paved area of the highway or within 30 feet of the traveled way (unless protected by concrete barriers and specifically approved by the Resident). Private vehicles owned by Contractor's employees shall be parked close together in a group no closer than 30 feet from the traveled way in pre-approved areas.

Channelization devices shall include Vertical Panel Markers, Barricades, Cones, and Cones and Drums. These devices shall be installed and maintained at the spacing shown on the Traffic Control Plans, or determined by the MUTCD, through the Work area.

No lane closures will be allowed during non-working hours, weekends and/or holiday periods unless included in the Contract as long-term traffic control requirement or approved by the Resident.

Any special signs, barricades or other devices deemed necessary by the Resident shall be furnished and maintained by the Contractor. Extra care shall be taken so that the traffic flow will not be disturbed. The use of construction signs and warning devices not shown on the Plans or in the MUTCD, unless approved by the Resident, will be prohibited.

The Contractor's personnel and equipment shall avoid crossing traffic whenever possible. No Contractor's vehicle may slow down or stop in a traffic lane unless said lane has previously been made safe with signs and barricades as required by the Resident.

No vehicle will move onto the traveled way at such a time or in such a manner so as to cause undue concern or danger to traffic approaching from either direction. The Contractor or his employees are not empowered to stop traffic.

The Contractor shall take necessary care at all times, in all operations and use of his equipment, to protect and facilitate traffic. During periods of idleness, the equipment shall not be left in a way to obstruct the traffic artery or to interfere with traffic.

The following Subsection is added:

652.3.41 Local Road General Requirements

Channelization devices consisting of barricades or drums, at a maximum spacing of 50 feet, shall be used in guardrail areas when neither the existing nor the new guardrail is in place. The Contractor shall not remove guardrail until absolutely necessary for construction operations in that area. The guardrail shall be replaced as soon as possible thereafter.

All excavation areas adjacent to the roadway shall be channelized continuously in both directions for the length of the Project in all areas where the centerline strip is not effective in accordance with the latest edition of MUTCD.

Where the roadway is adjacent to an area being excavated or filled, a minimum two foot shoulder should be maintained and the effective slope of the earth excavation or fill slope, beyond the two foot shoulder, shall not be steeper than 1-1/2 horizontal to 1 vertical. The effective slope of rock excavation shall not be steeper than 1 horizontal to 1 vertical beyond the two foot shoulder. In the case of cuts over five feet deep, an earth berm or other approved barrier shall be placed between the travel lane and the excavated area. In this instance, travel speeds shall be limited by specific advisory signing to 20 miles per hour in all cases. When excavation does not leave sufficient usable widths to maintain two-way traffic as provided in

Subsection 105.4, Maintenance of Work, one-lane traffic controlled by a traffic signal or continuous flagging may be considered. Closely spaced vertical panels, drums or other channelizing devices shall be used on any of these types of areas that are left exposed for short durations.

When paving operations or shoulder grading leave a three inch or less exposed vertical face at the edge of the traveled way, channelization devices shall be placed two feet outside of the pavement at intervals not exceeding 600 feet and a 48 inch by 48 inch W8-9 "Low Shoulder" sign shall be placed at a maximum spacing of 1/2 mile. When paving operations or shoulder grading leave a three inch or grater exposed vertical face at the edge of the traveled way, the Contractor shall place shoulder material for a width of at least four feet to meet the pavement grade, and place channelizing devices as above, before the lane is opened to traffic.

652.3.5 Installation of Traffic Control Devices

The first paragraph is deleted and replaced with the following:

Portable signs shall be erected on temporary sign supports approved crashworthy devices in conformance with NCHRP 350 requirements so that the bottom is either 1) 300 mm [12 inches]; or 2) greater than 1.5 m [five feet] above the traveled way. Post-mounted signs shall be erected so the bottom is no less than 1500 mm [five feet] above the traveled way, and 2100 mm [seven feet] above the traveled way in business, commercial, and residential areas. All post-mounted signs on the turnpike mainline shall be erected so the bottom is no less than 2100 mm [seven feet] above the traveled way. Post-mounted signs must also be erected so that the sign face is in a true vertical position. All signs shall be mounted within four feet of the existing edge of pavement. All signs shall be placed so that they are not obstructed in any manner and immediately modified to ensure proper visibility if obstructed. Due to Contractor or Project staging, it may be necessary to relocate previously erected portable or post-mount signs so they are clearly visible. Signs may be mounted lower or higher to fit the situation when authorized by the Resident. Cones shall either be weighted or nailed. Tires will not be allowed as weights.

The following is added to the end of the third paragraph:

NHCRP 350 tested drums with tire sidewall ballasts are acceptable. During winter periods, drums shall be placed on the grass shoulder or removed from the roadway so winter maintenance operations will not be impacted. This requires the placement of drums behind the median guardrail. Drums shall not be placed on snow banks.

The following is added to the end of the fifth paragraph:

The method of covering existing signs must be approved by the Resident. The use of adhesives on the sign face is prohibited.

The sixth paragraph is deleted and replaced with the following:

The Contractor shall replace damaged or missing traffic control devices with similar devices of acceptable quality.

The following paragraph is added to the end of this Subsection:

The Contractor is required to cover all existing signs, including regulatory and warning signs, within the Work zone which may conflict with the proposed construction signs. The Contractor is also required to cover all permanent construction signs when they conflict with a daily traffic control setup.

652.3.6 Traffic Control

The first sentence of the first paragraph is deleted and replaced with the following:

The minimum roadway width for local road one-way and two-way traffic, and minimum number of lanes and lane widths for the Maine Turnpike, are identified on the Project's traffic control plans and/or in Special Provision Section 652, Maintenance of Traffic (Specific Project Maintenance of Traffic).

The last sentence of the third paragraph is deleted and not replaced.

652.41 Traffic Officers

The first paragraph is deleted and replaced with the following:

Local road traffic officers, if required, shall be uniformed police officers. State Police officers and vehicles shall be used to warn and stop traffic on the Maine Turnpike. All State Police shall be scheduled through the Maine Turnpike Authority. The Authority will make payment for the State Police officers and vehicles directly to the State Police.

The Contractor will not be entitled to additional compensation if scheduled Work is not completed due to the unavailability of State Police.

652.6 Night Work

The sixth and seventh paragraphs are deleted and not replaced.

The following Subsection is added:

652.61 Construction Vehicles

The Contractor shall furnish approved signs reading "Construction Vehicle - Keep Back" to be used on trucks hauling to the Project. The signs shall be a minimum of 30 inch by 60 inch, Black and Orange, Type VII. The older type "Construction Vehicle - Do Not Follow" may be used until the end of their service life.

All vehicles used on the Project shall be equipped with amber flashing lights, visible from both front and rear, or by means of a single, approved type, revolving, flashing or strobe lights mounted so as to be visible 360 degrees. The vehicle flashing system shall be in continuous operation while the vehicle is on any part of the Project. Dump trucks and utility trucks shall have a strobe light mounted on each side of the vehicle.

652.7 Method of Measurement

The following is added to the end of the first paragraph:

The per unit measurement for payment of the portable–changeable message sign shall include the establishment and payment of a cellular phone account so that the portable–changeable message sign may be programmed remotely.

The following is added to the end of the second paragraph:

The number and locations of Flaggers will be determined by the Resident. Flaggers used during the Contract, for the convenience of the Contractor, will not be measured separately for payment, but shall be

incidental to the various pay items. The Authority will make payment for the State Police officers and vehicles directly to the State Police when utilized for mainline traffic control activities. State Police escorts, if required to move oversize material or equipment loads to the jobsite, will not be paid separately, but shall be incidental to the various pay items.

652.8.2 Other Items

The last paragraph is deleted and replaced with the following:

There will be no payment made under any 652 pay items after the expiration of the adjusted total Contract time.

SECTION 653 - POLYSTYRENE PLASTIC INSULATION

653.05 Placing Backfill

In the second sentence, "...shall be not less than 150 mm [six inches] loose measure." is changed to "...shall be not less than 250 mm [10 inches] loose measure."

In the third sentence "...crawler type bulldozer of not more than 390 kg/m^2 [80 lb/ft^2] ground contact pressure..." is changed to "...crawler type bulldozer of not more than 4875 kg/m^2 [2000 lb/ft^2] ground contact pressure..."

653.06 Compaction

In the final sentence "...crawler type bulldozer of not more than 390 kg/m^2 [80 lb/ft^2] ground contact pressure..." is change to "...crawler type bulldozer of not more than 4875 kg/m^2 [2000 lb/ft^2] ground contact pressure..." it]."

SECTION 656 - TEMPORARY SOIL EROSION AND WATER POLLUTION CONTROL

Section 656 is deleted in its entirety and replaced with the following:

656.01 Description

This Work shall consist of providing temporary erosion control during construction in accordance with these Specifications, standard details, Best Management Practices, or as otherwise directed.

All temporary erosion control devices shall be in place and approved by the Resident prior to any embankment and excavation operations. The Contractor is responsible for repairing and replacing damaged or missing sandbags, haybales, and silt fence material. The Contractor shall maintain these devices in a clean and properly operating condition as described herein.

The Contractor is responsible for all temporary drainage and erosion control measures. The Contractor shall review his construction operations and staging to determine if additional erosion control measures are required. The Resident may also request additional erosion control measures. The cost for all erosion control devices necessary, due solely to the Contractor's construction operations and are not shown on the Plans, shall be borne solely by the Contractor. The frequency of inspection of these devices by the Contractor and the Erosion Control Compliance Officer (ECCO) shall be bi-weekly and immediately following a rainfall of greater than 1/2 inch in a 24-hour period.

In areas of ledge or frozen ground only, the Contractor may opt to furnish and install an erosion control filter berm in lieu of silt fence. The erosion control filter berm shall be a water permeable windrow of a composted bark mix to remove suspended soil particles from water moving off the site. Erosion control filter berm shall be considered an erosion control device. This material and specific application shall be submitted to the Resident for approval.

656.02 General

Baled hay shall be bales at approximately 350 by 450 by 750 mm [14 by 18 by 30 inch], or an equivalent, securely tied to form a firm bale.

Sandbags shall consist of heavy cloth or woven plastic bags, approximately 0.03 m3 [one cubic foot] capacity, filled with sand or gravel.

Dumped stone shall be a graded mixture of large and small stone with approximately 50 percent of the stones larger than 150 mm [six inch].

Flexible drainage pipe shall consist of collapsible neoprene pipe, a minimum of 12 inches in diameter or equal.

656.03 Silt Fence

(a) Posts

Either hardwood posts or steel posts shall be used.

Hardwood posts shall be straight, at least 450 mm [18 inches] longer than the height of the silt fence and at least 32 mm by 32 mm [1 inch by 1 inch].

Staples shall be of No. 9 wire.

Steel posts shall be at least 450 mm [18 inches] longer than the height of the silt fence and have the means provided for fastening wire to the fence.

(b) Wire Support Fence

If required, wire support fence shall be at least 50 mm [2 inches] higher than the height of the silt fence. Horizontal and vertical wires shall be spaced no more than 150 mm [6 inches] apart. The top and bottom wires shall be at least 10 gauge; all other wires at least 12 gauge.

(c) Silt Fence

The woven geotextile fabric and components shall be made from polypropylene, polyester, polymide or other chemically stable material and be resistant to ultraviolet radiation degradation for at least 12 months of installation. Silt retention capacity shall be no less than 75 percent. The fabric shall have a Mullen burst test of no less than 1790 kPa [260 pounds per square inch] with a maximum average sieve opening size of 850 pm to 250 pm [No. 20 to No. 60]. Roll width of the fabric shall be no less than 150 mm [6 inches] wider than the height of the fence, except fabric for boom supported floating silt fence which shall be no less than 600 mm [two feet] wider than the design width.

(d) Flotation Devices

The flotation boom and weighing devices for boom supported floating silt fence shall be sufficient to hold the fence in an approximately vertical position.

656.04 Temporary Erosion Checks

Temporary erosion checks shall be constructed in ditches and at other locations designated. Checks shall be in accordance with the Standard Detail unless otherwise directed.

Baled hay, sandbags, or both, shall be used in other areas as necessary to inhibit soil erosion.

Sediment deposits behind haybales and silt fence shall be removed when the depth of sediment reaches 50 percent of the erosion control device height.

The Contractor is also required to have on-site, at all times, 25 percent additional Contract quantities of silt fence for use as backup devices.

656.041 Erosion Control Filter Berm

The erosion control berm shall be placed uncompacted, in a windrow in locations approved by the Resident. The cross section of the berm shall be four feet wide at the base and 1-1/2 feet high at the center. The erosion control filter berm shall be removed when no longer required, as determined by the Resident, and shall be distributed over an adjacent area.

656.05 Temporary Berms

When designated, temporary barriers shall be constructed along the edge of the embankment. The barriers shall be of embankment earth material, gravel or sand as available and shaped approximately as shown in the Standard Details. The barriers shall be compacted with the wheels of construction equipment. When placed on pavement, the berms shall be constructed of asphalt grindings or other non-erodible soil material as approved by the Resident, and shaped as shown in the Standard Details.

At designated intervals, temporary slope drains shall be constructed with a crescent shaped barrier placed at each slope drain to direct the water into the inlet pipe.

656.06 Temporary Slope Drains

Collapsible pipe with corrugated metal pipe inlet shall be placed down the embankment slopes at designated locations and in accordance with the Best Management Practices.

At the outlet end of the drain, dumped stone shall be placed to prevent scoring unless otherwise directed.

656.07 Dumped Stone

Dumped stone shall be placed at designated locations and shaped to the extent necessary to spread the stone over the area and in sufficient depth to prevent soil erosion.

656.08 Silt Fence

The silt fence shall be installed at all environmentally sensitive areas as shown on the Plans or as directed. The Contractor shall have the option to provide a reinforced filter fabric or an un-reinforced filter fabric attached to a wire fence.

The fence posts shall be spaced as specified by the Resident, however, not to exceed a maximum of 2.5 m [eight feet] apart when either type of silt fence is used and be driven a minimum of 450 mm [18 inches] into the ground.

The geotextile fabric shall be secured to the post or fence by suitable staples, tie wire or hog rings in such a manner as to prevent tearing and sagging of the fabric. The bottom of the geotextile fabric shall be entrenched into the ground a minimum depth of 150 mm [six inches] to prevent water from flowing under the fence. The geotextile shall be spliced together only at support posts with a minimum 150 mm [six inches] overlap and secure post connection which prevents leakage of silt. The top of the geotextile shall be installed with a reinforced top end section.

The Contractor shall maintain the silt fence in a functional condition at all times. All deficiencies shall be immediately corrected by the Contractor. The Contractor shall make a daily inspection of the silt fences in areas where construction activity causes drainage runoff, to ensure that the silt fences are properly located for effectiveness. Where deficiencies exist, additional silt fences shall be installed as approved or directed.

Sediment deposits shall be removed when sediments reach 50 percent of the height of the device. All sediment deposits remaining in place after the device is no longer required shall be graded to conform with the existing ground, seeded, and mulched immediately.

Geotextile fabric which has decomposed or has become ineffective and is still needed shall be replaced with material equal to the original design.

656.081 Boom Supported Floating Silt Fence

The silt fence fabric shall be securely attached to the flotation boom with a continuous weight placed the entire length of the fence to maintain the fence in a vertical submerged position from the surface of the water to the design depth.

Anchor's shall be placed at the ends of the fence, and intermediate locations if necessary, to hold the fence securely in place.

656.082 Maintenance

The erosion control devices will be cleaned, repaired, or replaced as necessary. All deficiencies shall be corrected immediately by the Contractor.

656.085 Erosion Control Compliance Officer

The Contractor shall designate an Erosion Control Compliance Officer (ECCO) on this Project who shall accompany the Resident's ECCO in the inspection of all erosion control devices. An inspection log shall be maintained by the Resident and the log shall be signed by the Resident's ECCO and the Contractor's ECCO after each inspection. Failure to comply with the erosion and sedimentation control requirements herein or as directed by the Resident's ECCO within 24-hours after the violation is noted in the inspection log, will result in the $1,000 per day per violation penalty until the violation is corrected to the satisfaction of the Resident.

656.09 Removing and Disposing

When no longer needed, material and devices for temporary erosion control shall be removed or may be left in place and dispersed over an adjacent area, as directed.

When removed, such devices may be reused in other locations provided they are in good condition and suitable to perform the erosion control for which they are intended.

When dispersed over adjacent areas, the material shall be scattered to the extent that it causes no unsightly conditions nor creates future maintenance problems. Dumped stone shall be dispersed or covered in such a manner that it will not interfere with future mowing operations.

656.10 Method of Measurement

Baled hay and sandbags will be measured for payment by the number of bales or bags satisfactorily placed. Dumped stone will be measured for payment by the cubic meter [cubic yard] in vehicles.

Temporary berms and temporary slope drains will be measured for payment by the meter [linear foot] measured parallel with the flow line including the pipe inlet.

Temporary silt fence will be measured by the meter [linear foot] along the gradient of the fence, end post to end post.

Boom supported floating silt fence will be measured by the meter [linear foot] not including anchorages.

Erosion control filter berm shall be measured by the linear foot.

The quantity of additional haybales and silt fence material required herein will be measured for payment only when and if they are actually put to use as additional measures on the Project as directed by the Resident. Haybales and silt fence material used for maintenance or replacement of existing devices will not be measured for payment.

The removal of silt and other material from behind the haybales and silt fence will not be measured separately for payment, but shall be incidental to the Erosion Control items.

656.11 Basis of Payment

The accepted quantity of baled hay or sandbags will be paid for at the Contract unit price each for each bale or bag which price shall be full compensation for furnishing and placing the bales or sandbags, for furnishing and driving the stakes for baled hay and for the removing and disposing of the bales, stakes and sandbags when no longer needed.

The accepted quantity of temporary berms will be paid for at the Contract unit price per meter [linear foot] of berm which price shall be full compensation for furnishing, placing and compacting material, for maintaining and for removing the berm when no longer needed.

There will be no separate payment for excavation done in the construction of temporary erosion control items under this Section and all necessary excavation shall be incidental to the Work.

The accepted quantity of dumped stone will be paid for at the Contract unit price per cubic

meter [cubic yard] which price shall be full compensation for furnishing the stone, transporting, placing and shaping. Payment for removal or for covering will be made under Item 629.05, Hand Labor, and the appropriate equipment rental items.

The accepted quantity of temporary silt fence and boom supported floating silt fence will be paid for at the Contract unit price per meter [linear foot] complete in place. Payment shall be full compensation for furnishing, installing, maintaining, for replacing deteriorated geotextile and clogged geotextile when required and for removing and disposing of the fence when no longer needed.

The accepted quantity of erosion control filter berm will be paid for at the Contract unit price per linear foot under Item 656.632, 30 Inch Temporary Silt Fence, which price shall be full compensation for furnishing, placing, and removing the erosion control filter berm.

The removal of sediments and debris that accumulate around erosion control devices, when directed by the Resident, will be paid for under the appropriate Contract items.

Cost of seeding and mulching the area after removal of the temporary silt fence will be paid for at the Contract unit prices for Item 618, Seeding, and Item 619, Mulch.

Payment will be made under:

Pay Item		Pay Unit
656.50	Baled Hay, in place	Each
656.51	Sandbag, in place	Each
656.55	Dumped Stone	Cubic Meter [Cubic Yard]
656.60	Temporary Berms	Meter [Linear Foot]
656.62	Temporary Slope Drains	Meter [Linear Foot]
656.631	375 mm [15 inch] Temporary Silt Fence	Meter [Linear Foot]
656.632	750 mm [30 inch] Temporary Silt Fence	Meter [Linear Foot]
656.64	Boom Supported Floating Silt Fence	Meter [Linear Foot]

SECTION 701 – STRUCTURAL CONCRETE RELATED MATERIALS

701.10 Fly Ash - Chemical Requirements

All references to “ASTM C311’ are changed to “ASTM C114”.

SECTION 703 - AGGREGATES

703.06 Aggregate for Base and Subbase

The first paragraph is deleted and replaced with the following:

The material shall have a minimum degradation value of 15 as determined by Washington State DOT Test Method T113, Method of Test for Determination of Degradation Value (March 2002 version), except that the reported degradation value will be the result of testing a single specimen from that portion of a sample that passes the 12.5 mm [1/2 inch] sieve and is retained on the 2.00 mm [No. 10] sieve, minus any reclaimed asphalt pavement used.

703.22 Underdrain Backfill Material

The first paragraph is amended as follows:

"...for Underdrain Type B..." is changed to "... for Underdrain Type B and C..."

SECTION 706 - NON-METALLIC PIPE

706.06 Corrugated Polyethylene Pipe for Underdrain, Option I and Option II in Culvert Pipe

The first sentence is changed from "...300 mm diameters to 900 mm" to "...300 mm diameters to 1,200 mm".

The last sentence which begins "This pipe and resins..." is deleted in its entirety and replaced with the following:

The manufacturing plants of polyethylene pipe shall be certified by the Eastern States Consortium. Polyethylene pipe shall be accepted based on third party certification by the AASHTO's National Transportation Product Evaluation Program.

SECTION 709 - REINFORCING STEEL AND WELDED STEEL WIRE FABRIC

709.03 Steel Strand

The second paragraph is changed from "...shall be 12mm [1/2 inch] AASHTO M203M/M203 (ASTM A416/A416M)..." to "...shall be 15.24 mm [0.600 inch] diameter AASHTO M203 (ASTM A416)...".

SECTION 712 - MISCELLANEOUS HIGHWAY MATERIALS

The following Subsections are added:

712.07 Tops and Traps

These metal units shall conform to the Plan dimensions and to the following Specification requirements for the designated materials:

Gray iron castings shall conform to the requirements of AASHTO M105, Class 30, unless otherwise designated.

Carbon steel castings shall conform to the requirements of AASHTO M103/M103M. Grade shall be 450-240 [65-35] unless otherwise designated.

Structural steel shall conform to the requirements of AASHTO M183/M183M or ASTM A283/A283M, Grade B or better. Galvanizing, where specified for these units, shall conform to the requirements of AASHTO M 111.

712.08 Corrugated Metal Units

The units shall conform to Plan dimensions and the metal to AASHTO M36/M36M. Bituminous coating, when specified, shall conform to AASHTO M 190 Type A.

712.09 Catch Basin and Manhole Steps

Steps for catch basins and for manholes shall conform to ASTM C478M [ASTM C478], Section 13 for either of the following material:

(a) Aluminum steps-ASTM B221M, [ASTM B21 1] Alloy 6061-T6 or 6005-T5.

(b) Reinforced plastic steps steel reinforcing bar with injection molded plastic coating copolymer polypropylene. Polypropylene shall conform to ASTM D 4101.

712.23 Flashing Lights

Flashing lights shall be power operated or battery operated as specified.

(a) Power operated flashing lights shall consist of housing, adapters, lamps, sockets, reflectors, lens, hoods and other necessary equipment designed to give clearly visible signal indications within an angle of at least 45 degrees and from three to 90 m [10 to 300 feet] under all light and atmospheric conditions.

Two circuit flasher controllers with a two-circuit filter capable of providing alternate flashing operations at the rate of not less than 50 nor more than 60 flashes per minute shall be provided.

The lamps shall be 650 lumens, 120 volt traffic signal lamps with sockets constructed to properly focus and hold the lamp firmly in position.

The housing shall have a rotateable sun visor not less than 175 nun [seven inches] in length designed to shield the lens.

Reflectors shall be of such design that light from a properly focused lamp will reflect the light rays parallel. Reflectors shall have a maximum diameter at the point of contact with the lens of approximately 200 mm [eight inches].

The lens shall consist of a round one-piece convex amber material which, when mounted, shall have a visible diameter of approximately 200 mm [eight inches]. They shall distribute light and not diffuse it. The distribution of the light shall be asymmetrical in a downward direction. The light distribution of the lens shall not be uniform, but shall consist of a small high intensity portion with narrow distribution for long distance throw and a larger low intensity portion with wide distribution for short distance throw. Lenses shall be marked to indicate the top and bottom of the lens.

(b) Battery operated flashing lights shall be self- illuminated by an electric lamp behind the lens. These lights shall also be externally illuminated by reflex reflective elements built into the lens to enable it to be seen by reflex reflection of the light from the headlights of oncoming traffic. The batteries must be entirely enclosed in a case. A locking device must secure the case. The light shall have a flash rate of not less than 50 nor more than 60 flashes per minute from minus 30°C [minus 20°F] to plus 65°C [plus 150°F]. The light shall have an on time of not less than 10 percent of the flash cycle. The light beam projected upon a surface perpendicular to the axis of the light beam shall produce a lighted rectangular projection whose minimum horizontal dimension shall be five degrees each side of the horizontal axis. The effective intensity shall not have an initial value greater than 15.0 candelas or drop below 4.0 candelas during the first 336-hours of continuous flashing. The illuminated lens shall appear to be uniformly

bright over its entire illuminated surface when viewed from any point within an angle of nine degrees each side of the vertical axis and five degrees each side of the horizontal axis. The lens shall not be less than 175 mm [seven inches] in diameter including a reflex reflector ring of 13 mm [1/2 inch] minimum width around the periphery. The lens shall be yellow in color and have a minimum relative luminous transmittance of 0.440 with a luminance of 2854° Kelvin. The lens shall be one-piece construction. The lens material shall be plastic and meet the luminous transmission requirements of this Specification. The case containing the batteries and circuitry shall be constructed of a material capable of withstanding abuse equal to or greater than 1.21 mm thick steel [No. 18 U.S. Standard Gage Steel]. The housing and the lens frame, if of metal shall be properly cleaned, degreased and pretreated to promote adhesion. It shall be given one or more coats of enamel which, when dry shall completely obscure the metal. The enamel coating shall be of such quality that when the coated case is struck a light blow with a sharp tool, the paint will not chip or crack and if scratched with a knife will not powder. The case shall be so constructed and closed as to exclude moisture that would affect the proper operation of light. The case shall have a weep hole to allow the escape of moisture from condensation. Photoelectric controls, if provided, shall keep the light operating whenever the ambient light falls below 215 lx [20 foot candles]. Each light shall be plainly marked as to the manufacturer's name and model number.

If required by the Resident, certification as to conformance to these Specifications shall be furnished based on results of tests made by an independent testing laboratory. All lights are subject to random inspection and testing. All necessary random samples shall be provided to the Resident upon request without cost to the Authority. All such samples shall be returned to the Contractor upon completion of the tests.

712.32 Copper Tubing

Copper tubing and fittings shall conform to the requirements of ASTM B88M Type A [ASTM B88, Type K] or better.

712.33 Non-metallic Pipe, Flexible

Non-metallic pipe and pipe fittings shall be acceptable flexible pipe manufactured from virgin polyethylene polymer suitable for transmitting liquids intended for human or animal consumption.

712.34 Non-metallic Pipe, Rigid

Non-metallic pipe shall be Schedule 40 polyvinylchloride (PVC) that meets the requirement of ASTM D 1785. Fittings shall be of the same material.

712.341 Metallic Pipe

Metallic pipe shall be ANSI, Standard B36. 10, Schedule 40 steel pipe conforming to the requirements of ASTM A53 Types E or S, Grade B. End plates shall be steel conforming to ASTM A36/A36M.

Both the sleeve and end plates shall be hot dip galvanized. Pipe sleeve splices shall be welded splices with full penetration weld before galvanizing.

712.35 Epoxy Resin

Epoxy resin for grouting or sealing shall consist of a mineral filled thixotropic, flexible epoxy

resin having a pot life of approximately one hour at 10°C [50°F]. The grout shall be an approved product suitable for cementing steel dowels into the preformed holes of curb inlets and adjacent curbing. The sealant shall be an approved product, light gray in color and suitable for coating the surface.

712.36 Bituminous Curb

The asphalt cement for bituminous curb shall be of the grade required for the wearing course, or shall be Viscosity Grade AC-20 meeting the current requirements of Subsection 702.01, Asphalt Cement. The aggregate shall conform to the requirements of Subsection 703.07. The coarse aggregate portion retained on the 2.36 mm [No. 8] sieve may be either crushed rock or crushed gravel.

The mineral constituents of the bituminous mixture shall be sized and graded and combined in a composite blend that will produce a stable durable curbing with an acceptable texture. Bituminous material for curb shall meet the requirements of Section 403, Hot Bituminous Pavement.

712.37 Precast Concrete Slab

Portland Cement concrete for precast slabs shall meet the requirements of Section 502, Structural Concrete, Class A.

The slabs shall be precast to the dimension shown on the Plans and cross section and in accordance with the Standard Detail Plans for Concrete Sidewalk Slab. The surface shall be finished with a float finish in accordance with Subsection 502.14(c). Lift devices of sufficient strength to hold the slab while suspended from cables shall be cast into the top or back of the slab.

712.38 Stone Slab

Stone slabs shall be of granite from an acceptable source, hard, durable, predominantly gray in color, free from seams which impair the structural integrity and be of smooth splitting character. Natural color variations characteristic of the deposit will be permitted. Exposed surfaces shall be free from drill holes or indications of drill holes. The granite slabs in any one section of backslope must be all the same finish.

The granite slabs shall be scabble dressed or sawed to an approximately true plane having no projections or depressions over 13 mm [1/2 inch] under a 600 mm [two foot] straightedge or over 25 mm [one inch] under a 1200 mm [four foot] straightedge. The arris at the intersection of the top surface and exposed front face shall be pitched so that the arris line is uniform throughout the length of the installed slabs. The sides shall be square to the exposed face unless the slabs are to be set on a radius or other special condition which requires that the joints be cut to fit, but in any case shall be so finished that when the stones are placed side by side no space more than 20 mm [3/4 inch] shall show in the joint for the full exposed height.

Lift pin holes in all sides will be allowed except on the exposed face.

SECTION 717 - ROADSIDE IMPROVEMENT MATERIAL

717.03 C. Method #3 - Roadside Mixture #3

Seed proportions are amended as follows:

Crown Vetch	25.0%
Perennial Lupine	25.0%

Red Clover	12.5%
Annual Rye	37.5%

717.05 Mulch Binder

The third sentence is amended as follows:

"Paper fiber mulch may be used as a binder at the rate of 2.3 kg/unit [5 lb/unit]."

MAINE TURNPIKE AUTHORITY

SPECIFICATIONS

PART II – SPECIAL PROVISIONS

MAINE TURNPIKE AUTHORITY

SPECIFICATIONS

PART II - SPECIAL PROVISIONS

All work shall be governed by the Maine Department of Transportation Standard Specifications except for that work which applies to sections of the Maine Department of Transportation Standard Specifications which are amended by the Maine Turnpike General Provisions and the following modifications, additions and deletions.

General Description of Work

The work consists of removing four interior toll lanes and constructing one northbound and one southbound ORT lane along with installation of infrastructure and select portions of toll equipment in support of the toll system for the ORT lanes for the Maine Turnpike Authority. The work also consists of tolling equipment and infrastructure upgrades in support of the toll system for the cash lanes for the Maine Turnpike Authority.

The work includes earthwork, pavement, concrete, toll plaza demolition and modification, concrete drilled shafts and rocker sockets, signing, bridge overpass-mounted, overhead and cantilever sign structures, concrete barrier, guardrail, electrical work, lighting and lightning suppression systems. The work also includes the demolition and replacement of the six inch pavement slab in lanes 1, 2, 7 and 8 and portions of the 12 inch island slabs, repair of the exposed 12 inch structural slab, demolition and installation of tolling equipment in the tunnel, canopy, and toll booth, maintenance of traffic and all other work incidental thereto in accordance with the Plans and Specifications.

The general limits of work are from Mile 98.1 (Station 5004+00) to Mile 102.4 (Station 5231+00) in West Gardiner.

Plans

The drawings included in these Contract Documents, and referred to as the Plans, show the general character of the work to be done under this Contract. They bear the general title “Maine Turnpike Authority – Contract 2015.11 – West Gardiner Barrier Toll Plaza, Open Road Tolling Conversion, (MM 100.2)”. The right is reserved by the Resident to make such minor corrections or alterations in the Plans as he deems necessary without change in the unit prices on the Schedule of Prices of the Proposal.

101.2 Definition

Holidays

The following is added after Memorial Day in the General Provisions:

Independence Day 2015	12:01p.m. preceding Thursday to 06:00 p.m. the following Monday
Christmas Day 2015	12:01 p.m. preceding Wednesday to 12:01 p.m. the following Monday.
New Year's Day 2016	06:00 a.m. preceding Thursday to 06:00 a.m. the following Monday.
Independence Day 2016	06:00 a.m. preceding Friday to 06:00 a.m. the following Tuesday.
Christmas Day 2016	06:00 a.m. preceding Friday to 06:00 a.m. the following Tuesday.
New Year's Day 2017	06:00 a.m. preceding Friday to 06:00 a.m. the following Tuesday.

102.11.2 Curable Bid Defects

This Subsection is amended by the addition of the following:

G. If the electrical subcontractor is not identified in the Proposal the Contractor will need to identify prior to Award.

H. If the electrical subcontractor identified in the Proposal is not prequalified by the Maine Department of Transportation for Traffic Signals and Lighting Projects the Contractor will need to agree to contract with a prequalified electrical subcontractor prior to Award.

103.4 Notice of Award

The following sentence is added:

The Maine Turnpike Authority Board is scheduled to consider the Contract Award on March 26, 2015.

104.3.8 Wage Rates and Labor Laws

The fourth paragraph under Records on GP Page 7 of 53 has been amended as follows:

A copy of each record must be filed monthly with the Maine Turnpike Authority. This information shall be sent directly to the Maine Turnpike Authority, Director of Engineering and Building Maintenance, Attention: Wage Rate Records, 2360 Congress Street, Portland, ME 04102. The records shall note the Maine Turnpike Contract Number.

The fair minimum hourly rates determined by the State of Maine Department of Labor for this Contract are as follows:

THIS DOCUMENT MUST BE CLEARLY POSTED AT THE PERTAINING STATE FUNDED PREVAILING WAGE CONSTRUCTION SITE

State of Maine
Department of Labor
Bureau of Labor Standards
Wage and Hour Division
Augusta, Maine 04333-0045
Telephone (207) 623-7906

Wage Determination - In accordance with 26 MRSA §1301 et. seq., this is a determination by the Bureau of Labor Standards, of the fair minimum wage rate to be paid laborers and workers employed on the below titled project.

Title of Project --------West Gardiner Barrier Toll Plaza Open Road Tolling Conversion- 2015.11

Location of Project –West Gardiner, Kennebec County

2015 Fair Minimum Wage Rates
Heavy & Bridge Kennebec County

Occupation Title	Minimum Wage	Minimum Benefit	Total	Occupation Title	Minimum Wage	Minimum Benefit	Total
Asphalt Raker	$14.00	$0.00	$14.00	Line Erector - Power/Cable Splicer	$27.50	$14.26	$41.76
Backhoe Loader Operator	$18.00	$2.23	$20.23	Loader Operator - Front-End	$17.50	$2.90	$20.40
Bulldozer Operator	$18.00	$2.77	$20.77	Mechanic- Maintenance	$22.78	$3.58	$26.36
Carpenter	$20.25	$6.17	$26.42	Mechanic- Refrigeration	$22.00	$4.43	$26.43
Carpenter - Rough	$17.50	$2.99	$20.49	Millwright	$21.50	$4.67	$26.17
Cement Mason/Finisher	$16.81	$0.74	$17.55	Painter	$15.00	$0.00	$15.00
Communication Equip Installer	$23.57	$5.63	$29.20	Pile Driver Operator	$22.21	$4.16	$26.37
Comm Transmission Erector-Microwave & Cell	$20.00	$6.22	$26.22	Pipe/Steam/Sprinkler Fitter	$23.00	$6.37	$29.37
Crane Operator =>15 Tons)	$25.00	$5.10	$30.10	Pipelayer	$23.06	$9.55	$32.61
Crusher Plant Operator	$18.65	$3.62	$22.27	Plumber (Licensed)	$24.00	$3.61	$27.61
Diver	$23.00	$8.25	$31.25	Plumber Helper/Trainee (Licensed)	$17.88	$2.39	$20.27
Driller - Rock	$17.50	$4.86	$22.36	Propane & Natural Gas Servicer & Inst	$24.00	$3.13	$27.13
Earth Auger Operator	$22.50	$10.46	$32.96	Pump Installer	$22.00	$2.70	$24.70
Electrician - Licensed	$25.22	$8.30	$33.52	Reclaimer Operator	$20.75	$10.84	$31.59
Electrician Helper/Cable Puller (Licensed)	$16.39	$6.84	$23.23	Rigger	$20.00	$3.18	$23.18
Excavator Operator	$19.00	$0.83	$19.83	Roller Operator - Pavement	$18.75	$5.25	$24.00
Fence Setter	$14.00	$0.00	$14.00	Screed/Wheelman	$17.00	$3.42	$20.42
Flagger	$9.00	$0.00	$9.00	Truck Driver - Light	$17.00	$1.46	$18.46
Ironworker - Reinforcing	$20.00	$1.23	$21.23	Truck Driver - Medium	$12.50	$0.93	$13.43
Ironworker - Structural	$23.50	$5.28	$28.78	Truck Driver - Heavy	$16.00	$2.50	$18.50
Laborers (Incl.Helpers & Tenders)	$14.00	$1.01	$15.01	Truck Driver - Tractor Trailer	$20.50	$2.85	$23.35
Laborer - Skilled	$18.00	$3.84	$21.84				

The Laborer classifications include a wide range of work duties. Therefore, if any specific occupation to be employed on this project is not listed in this determination, call the Bureau of Labor Standards at the above number for further clarification.

Welders are classified in the trade to which the welding is incidental.

Apprentices - The minimum wage rate for registered apprentices are those set forth in the standards and policies of the Maine State Apprenticeship and Training Council for approved apprenticeship programs.

Posting of Schedule - Posting of this schedule is required in accordance with 26 MRSA §1301 et. seq., by any contractor holding a State contract for construction valued at $50,000 or more and any subcontractors to such a contractor.

Appeal - Any person affected by the determination of these rates may appeal to the Commissioner of Labor by filing a written notice with the Commissioner stating the specific grounds of the objection within ten (10) days from the filing of these rates with the Secretary of State.

Determination No: HB-011-2015

Filing Date: January 13, 2015

Expiration Date: 12-31-2015

A true copy

Attest: Pamela Megathlin

Pamela D. Megathlin
Director
Bureau of Labor Standards

BLS 424HB (R2015) (Heavy & Bridge Kennebec)

THIS DOCUMENT MUST BE CLEARLY POSTED AT THE PERTAINING STATE FUNDED PREVAILING WAGE CONSTRUCTION SITE

State of Maine
Department of Labor
Bureau of Labor Standards
Wage and Hour Division
Augusta, Maine 04333-0045
Telephone (207) 623-7906

Wage Determination - In accordance with 26 MRSA §1301 et. seq., this is a determination by the Bureau of Labor Standards, of the fair minimum wage rate to be paid laborers and workers employed on the below titled project.

Title of Project --------West Gardiner Barrier Toll Plaza Open Road Tolling Conversion- 2015.11

Location of Project –West Gardiner, Kennebec County

2015 Fair Minimum Wage Rates
Highway & Earthwork Kennebec County

Occupation Title	Minimum Wage	Minimum Benefit	Total	Occupation Title	Minimum Wage	Minimum Benefit	Total
Asphalt Raker	$13.08	$0.00	$13.08	Ironworker - Reinforcing	$20.00	$1.23	$21.23
Backhoe Loader Operator	$19.00	$0.76	$19.76	Ironworker - Structural	$22.65	$6.06	$28.71
Bricklayer	$23.24	$1.80	$25.04	Laborers (Incl.Helpers & Tenders)	$12.50	$0.93	$13.43
Bulldozer Operator	$18.00	$2.36	$20.36	Laborer - Skilled	$15.50	$3.40	$18.90
Carpenter	$19.00	$1.75	$20.75	Line Erector - Power/Cable Splicer	$27.42	$8.05	$35.47
Carpenter - Rough	$24.00	$1.90	$25.90	Loader Operator - Front-End	$16.50	$2.27	$18.77
Cement Mason/Finisher	$16.81	$0.74	$17.55	Mechanic- Maintenance	$17.00	$2.47	$19.47
Concrete Pump Operator	$19.00	$3.35	$22.35	Painter	$16.38	$3.50	$19.88
Crane Operator =>15 Tons)	$24.00	$4.81	$28.81	Paver Operator	$19.00	$2.00	$21.00
Crusher Plant Operator	$18.00	$2.85	$20.85	Pipelayer	$15.16	$2.17	$17.33
Diver	$23.00	$8.25	$31.25	Pump Installer	$22.00	$2.70	$24.70
Driller - Rock	$17.50	$4.86	$22.36	Reclaimer Operator	$20.75	$10.84	$31.59
Earth Auger Operator	$22.50	$8.14	$30.64	Rigger	$20.00	$3.18	$23.18
Electrician - Licensed	$23.63	$13.82	$37.45	Roller Operator - Pavement	$17.63	$4.47	$22.10
Electrician Helper/Cable Puller (Licensed)	$16.39	$3.23	$19.62	Screed/Wheelman	$17.50	$2.46	$19.96
Excavator Operator	$18.20	$2.88	$21.08	Stone Mason	$17.00	$0.00	$17.00
Fence Setter	$11.00	$0.00	$11.00	Truck Driver - Light	$17.00	$1.46	$18.46
Flagger	$9.00	$0.00	$9.00	Truck Driver - Medium	$13.00	$0.68	$13.68
Grader/Scraper Operator	$20.00	$4.90	$24.90	Truck Driver - Heavy	$15.00	$1.79	$16.79
Highway Worker/Guardrail Installer	$16.80	$3.56	$20.36	Truck Driver - Tractor Trailer	$16.50	$4.26	$20.76
Hot Top Plant Operator	$20.75	$10.84	$31.59	Truck Driver - Mixer (Cement)	$14.60	$0.68	$15.28

The Laborer classifications include a wide range of work duties. Therefore, if any specific occupation to be employed on this project is not listed in this determination, call the Bureau of Labor Standards at the above number for further clarification.

Welders are classified in the trade to which the welding is incidental.

Apprentices - The minimum wage rate for registered apprentices are those set forth in the standards and policies of the Maine State Apprenticeship and Training Council for approved apprenticeship programs.

Posting of Schedule - Posting of this schedule is required in accordance with 26 MRSA §1301 et. seq., by any contractor holding a State contract for construction valued at $50,000 or more and any subcontractors to such a contractor.

Appeal - Any person affected by the determination of these rates may appeal to the Commissioner of Labor by filing a written notice with the Commissioner stating the specific grounds of the objection within ten (10) days from the filing of these rates with the Secretary of State.

Determination No: HI-028-2015

Filing Date: January 13, 2015

Expiration Date: 12-31-2015

A true copy

Attest: Pamela Megathlin

Pamela D. Megathlin
Director
Bureau of Labor Standards

BLS 424HI (R2015) (Highway & Earthwork Kennebec)

104.4.4 Request for Information (RFI)

This Subsection is amended by the addition of the following:

RFI's shall be submitted on company letterhead or on a standard company form with a tracking number. The General Contractor shall maintain a corresponding RFI log.

RFI's may be attached to an e-mail, but shall not be in the form of an e-mail, and at a minimum, must reference the subject Plan or Specification in question.

RFI's with multiple questions may be treated as a submittal and the allowed 21 calendar days for review and response will govern.

104.4.6 Utility Coordination

This Subsection is amended by the addition of the following:

These Special Provisions outline the arrangements which have been established by the Authority for coordination of the work to be accomplished by the utilities. The scope and schedule of utility relocation work is noted herein. The Contractor shall plan and conduct his work accordingly.

General

Utility working days are Monday through Friday, conditions permitting. Times are estimated on the basis of a single crew for each utility. Any times and dates mentioned are estimates only and are dependent upon favorable weather, working conditions, and freedom from emergencies. The Contractor shall have no claim against the Authority if they are exceeded.

The Contractor must comply with all OSHA regulations pertaining to work adjacent to utility wires. The Contractor shall plan and conduct his work accordingly.

Existing utilities at the site include Maine Turnpike Authority. The Authority will be responsible for contracting Dig Smart to locate their facilities.

104.4.7 Cooperation With Other Contractors

This Subsection is amended by the addition of the following:

The Maine Turnpike will have the following adjacent work during this Contract:

Contract 2015.10 Superstructure Replacement Lunts Hill Road Mile 99.0, scheduled to be substantially complete by October 31, 2015.

MaineDOT WIN 20216.00 – Route 126 Intersection Improvements in West Gardiner, Maine.

Simultaneous work by the System Integrator (SI) during the Contractor's work is specifically related to installation of toll equipment and testing of completed installation in work areas adjacent to where the Contractor will be working. The first period of this adjacent work will occur for approximately 10 days prior to the Interim Completion Date #1A (June 12, 2015). During this period, the SI will be testing the toll system installation in Lanes 1 and 8 with low speed test traffic entering and exiting Lanes 1 and 8. Testing in the ORT lanes will be conducted after Substantial Completion Date, August 16, 2016. This period is anticipated to be approximately 45 days at a minimum, but could be extended for a longer period of time at the Authority's discretion. The Contractor's work precedes testing such that work (if necessary) by the Contractor after the completion of testing in these areas is limited to final surface paving to be coordinated with any final testing activities if testing is not complete at the time of final paving.

The following Subsection is added:

105.2.4.2 Lead Paint

The Contractor shall note that the existing structure may contain lead based paint. The Contractor shall institute every precaution when working with materials coated with lead based paints.

Lead Paint Removal

The Contractor is required to remove and dispose of lead based paint and paint residue before cutting, grinding, drilling and sandblasting existing materials in preparation of completing the work except as provided under the Drilling of Lead Based Paint subsection in this Special Provision. All lead based paint and paint residue shall be removed, handled, stored and disposed of in conformance with all local, State and Federal laws and regulations governing lead based paint. The Contractor may use his own properly trained employees to abate the lead based paint in accordance with applicable regulations and requirements; or he may hire a licensed lead abatement subcontractor to abate the lead based paint in accordance with applicable regulations and requirements.

The Contractor, or licensed lead abatement subcontractor, shall submit a Project specific Health and Safety (OSHA) Plan and a Hazardous Waste Management Plan (EPA/DEP) a minimum of two (2) weeks prior to undertaking the removal of lead based paint.

Drilling of Lead Based Paint

The Contractor may drill lead based painted steel, without lead based paint removal, provided the Contractor collects and recycles the drill cuttings at a licensed metal recycling facility. If the Contractor chooses not to collect and recycle the drill cuttings at a licensed metal recycling facility he will be required to abate the area where drilling is to occur in full

accordance with the lead based paint removal, storage and disposal requirement of this Special Provision.

The Authority will require a signed statement from the Contractor stating the drill cuttings were collected and recycled at a licensed metal recycling facility and the name the recycling facility.

Health and Safety Plan

The Health and Safety Plan submittal shall describe how the Contractor/licensed lead abatement subcontractor intends to remove the lead based paints; and shall outline how the Contractor/licensed lead abatement subcontractor will adhere to all Federal, State and local ordinances which govern worker (including authorized representatives of the Authority) exposure to lead based paints, and ensure the safety of the workers performing lead removal. Copies of current worker training certificates (OSHA), medical screenings, and respirator fit up shall be included in the submittal.

Hazardous Waste Management Plan

The Hazardous Waste Management Plan submittal shall describe how the Contractor/licensed lead abatement subcontractor intends to manage the hazardous waste that will be generated, temporarily accumulated, stored, transported off-site and disposed; adhere to ordinances associated with the management of hazardous wastes; and ensure protection of the environment.

The Hazardous Waste Management Plan shall:

- Be signed by the Contractor;
- State whether the Contractor or licensed lead abatement subcontractor will be undertaking the work; and,
- State whether abated lead materials will be accumulated and stored on-site (required if the Contractor is not licensed by DEP/EPA to transport and temporarily store lead based hazardous waste), or be removed in HEPA vacuums daily to the removal Contractor's licensed waste storage facility (permitted only if the Contractor is licensed by DEP/EPA to transport and temporarily store lead based hazardous waste).

If abated lead materials are to be accumulated and stored on-site, the Hazardous Waste Management Plan shall include (at a minimum) the following:

- Container size and labeling standards:
  - Containers must be 55 gallons or less
  - Containers must have the labeled "HAZARDOUS WASTE"

- Accumulation requirements:
  - Labels will include accumulation start date and container full date

- On-site storage will not exceed 180 days from full date
- Total on-site storage shall not exceed 55 gallons or 220 pounds

- Inspections (including frequency and checklist):
  - Inspections shall be performed each day the Contractor works
  - Inspection checklist shall be similar to MaineDEP format (Refer to Appendix A1 of MaineDEP Handbook for Hazardous Waste Generators – January 2003)

- Transport and DOT "pre-transport requirements":
  - Specify the licensed hazardous waste transporter to be used
  - Obtain Generator's EPA ID No. (typically a provisional ID # is obtained through the licensed hazardous waste transporter)
  - USDOT – approved containers must be used for shipment
  - Schedule the Authority for signing Hazard Waste Manifest

- Recordkeeping requirements:
  - Describe where at the jobsite the required records (e.g., inspection logs, training records, Lead Determination report/hazardous waste characterization, etc.) will be maintained
  - Describe how and when copies of the required documents specified above will be transferred to the Authority's Environmental Services Coordinator's office

The Contractor/licensed lead abatement subcontractor, shall provide documentation to the Authority that the employees who will be removing, handling, managing and/or directly supervising the hazardous waste operations have received required Resource Conservation and Recovery Act (RCRA) hazardous waste management training, and all training is current.

The lead based hazardous waste must remain on-site, unless the removal is being performed by a licensed lead abatement subcontractor that collects the paint residue in HEPA vacuums and is licensed by DEP/EPA to transport and temporarily store lead based hazardous waste at the removal Contractor's licensed waste storage facility. Both on-site and licensed off-site lead based hazardous waste storage facilities require secure storage and daily inspection of the stored waste.

If the removal Contractor is not licensed by DEP/EPA to transport and temporarily store lead based hazardous waste off-site, then an EPA licensed Hazardous Waste transporter(s) shall be used to remove hazardous waste from the site. All removal and disposal documentation will be required when the hazardous waste leaves the site. As the Generator, only the Authority's Environmental Services Coordinator or his trained designee shall sign waste manifests when material is removed from the Project site.

The removal, storage, handling, transporting, and disposal of lead based paint and lead based paint residue will not be measured separately for payment, but shall be incidental to the various Contract work items.

105.2.4.3 Universal Waste

The Maine Turnpike Authority shall be responsible for the removal of universal waste items required in coordination with the demolition work required by the Contractor.

Prior to the commencement of the building demolition, the Contractor shall coordinate with the Resident and Authority to identify the timing of when universal waste removal will be required. Contractor should anticipate up to two days of schedule for the Authority to perform this work in advanced of associated demolition.

105.3 Traffic Control and Management

See Special Provision Section 526, Concrete Barrier.

See Special Provision Section 652, Maintenance of Traffic.

105.4.3 Maintenance During Winter Construction

This Subsection is amended by the addition of the following:

The Contractor is responsible for the maintenance of erosion control and traffic control devices. The Authority will be responsible for winter road maintenance for lanes open to traffic. The Authority will also be responsible for winter road maintenance for the ORT lanes after Substantial Completion.

The Contractor is also responsible for snow and ice removal from all drainage paths and catch basins located behind traffic control devices, in order to maintain drainage away from the paved travel way.

105.5.1 General Requirements

Construction Access

The Contractor shall construct a stabilized construction entrance in accordance with the Best Management Practices at all locations where construction vehicles will exit and/or enter existing paved shoulders or travel ways from non-paved areas. The Resident shall approve of the locations. Additional stabilized construction entrances may be required due to the Contractor's operations as well as site conditions. The construction and maintenance of the stabilized construction entrance including frequent sweeping of the paved surfaces shall be incidental to the Contract.

105.7.4 Submittal Requirements

The following paragraph is added:

In addition to the hardcopy requirement, the Contractor shall also make submittals in PDF electronic file format via email. Submittals shall be accompanied by a cover sheet, which identifies the submittal number, subject date, and any revision numbers associated with the submittal.

105.8.1 Temporary Soil Erosion and Water Pollution Control

This Subsection in the General Provisions is deleted and replaced with the following:

The Contractor shall certify in writing to the Resident that an On-Site Responsible Party (OSRP) has been trained and is knowledgeable in erosion and sediment control (ECS) through the MaineDEP's Non-Point Source Training Center, or an equivalent program, or is licensed in the State of Maine as a Professional Engineer, Landscape Architect or Soil Scientist. Proof of certification for the OSRP, and any other Contractor employees charged with conducting ESC inspections, must be submitted to the Authority's Environmental Coordinator prior to starting work.

Spill Prevention Control and Countermeasure (SPCC) Plan

Any areas where petroleum products, oils or non-petroleum hazardous materials are handled or stored will require a Spill Prevention Control and Countermeasure (SPCC) Plan. These materials may not be stored or handled in areas of the site draining to an infiltration area. The Plan will be submitted to the Resident before construction begins. In addition to petroleum products and hazardous materials, controls must be used to prevent additional pollutants (i.e., fertilizers, pesticides, salt/brine, litter, construction demolition debris, etc.) from being discharged from materials on-site, including storage practices, to minimize exposure of the materials to stormwater, and appropriate spill prevention, containment, and response planning and implementation. The Plan shall provide the following information at a minimum:

1. The name and emergency response numbers (telephone number, cellular phone and pager numbers, if applicable) of the Contractor's representative responsible for spill prevention and response;

2. Description of handling or storage location noting setbacks from water bodies where relevant. Significant sand and gravel aquifers and other sensitive resources, including infiltration areas, must be avoided wherever possible;

3. Description of storage and containment facilities, such as dikes, berms, sumps, and other forms of secondary containment that prevent discharge to groundwater or surface water;

4. Description of equipment and/or materials used to prevent discharges (including sorbent materials);

5. Preventative measures to minimize the possibility of a spill; and,

6. Contingency plan if spill should occur.

The approved plan must be posted at the Project site. All personnel working in the area are required to read and be familiar with the plan.

There shall be no separate payment for preparation of a SPCC Plan acceptable to the Resident and preparation shall be incidental to the work.

Notification of Authority of Hazardous Material Spills

In addition to MaineDEP reporting requirements for spills greater than five (5) gallons, the Contractor shall notify the on-site Resident Inspector. The on-site Resident Inspector shall notify the Maine Turnpike Radio Room at 207-871-7701. When the on-site Resident Inspector is not available, the Contractor shall notify the Maine Turnpike Radio Room directly at 207-871-7701.

In addition to MaineDEP reporting requirements for all spills where any stream or water body is threatened, the Contractor shall notify the on-site Resident Inspector. The on-site Resident Inspector shall notify the Maine Turnpike Radio Room at 207-871-7701. When the on-site Resident Inspector is not available, the Contractor shall notify the Maine Turnpike Radio Room directly at 207-871-7701.

These notification procedures shall be incorporated into the Spill Prevention Control and Countermeasure (SPCC) Plan.

Responsibility for Control and Cleanup of Hazardous Material Spills

The Contractor shall be responsible to control spills and properly cleanup, containerize, and dispose of petroleum and/or other hazardous material waste that results from the actions and/or equipment of the Contractor or his employees, subcontractors and suppliers. Chemicals, exposed to stormwater must be prevented from becoming a pollutant source.

The Contractor shall also be responsible for all direct and indirect costs associated with the control of spills and proper cleanup, containerization, and disposal of petroleum and/or other hazardous material waste that results from the actions and/or equipment of the Contractor or his employees, subcontractors and suppliers.

The following Subsections are added:

105.8.1.1 Environmental Standards

The Project will be performed in accordance with the MaineDOT Best Management Practices (BMP) latest issue. The Contractor shall fully comply with all erosion and sedimentation control requirements outlined in the BMP's or contained herein. Non-compliance with these requirements as determined by the Resident shall result in a financial penalty of $1,000 per day, per violation. Any fines assessed to the Maine Turnpike Authority as a result of the Contractor's non-compliance shall be paid by the Contractor. If the Contractor fails to pay, the cost of the fine will be deducted from monies due, or which may become due, to the Contractor under this Contract.

In the event of conflict between these Specifications and other erosion and pollution control laws, rules or regulations of other Federal, State and local agencies, the more restrictive law, rules or regulations shall apply.

The standards as described below shall be met on the Project:

105.8.1.11 Water Pollution Control Requirements

(a) General

1. The Contractor must comply with the applicable Federal, State and local laws and regulations relating to prevention and abatement of water pollution.
2. Except as allowed by an approved permit or otherwise authorized by the Authority in writing, pollutants containing construction debris including excavated material, aggregate, residue from cleaning, sandblasting or painting, cement mixtures, chemicals, fuels, lubricants, bitumens, raw sewage, wood chips, and other debris shall not be discharged into water bodies, wetlands or natural or manmade channels leading thereto and such materials shall not be located alongside water bodies, wetlands, or such channels such that it will be washed away by high water runoff. Furthermore, liquid petroleum products and other hazardous materials with the potential to contaminate groundwater may not be stored or handled in the areas of the site draining to an infiltration area, unless these portions of the site (where storage and handling of these materials) are isolated using dikes, berms, sumps and other forms of secondary containment that prevent discharge to groundwater.
3. Temporary winter stabilization must be used between November 1st and April 15th or outside of said time period if the ground is frozen or snow covered. Temporary winter stabilization involves, at a minimum, covering all disturbed soils and seeded ground that is not Acceptable Work with an approved method. Use of these methods for over-winter temporary erosion control will be paid for under the appropriate Erosion Control items included in the Contract.

4. Construction operations in water bodies or wetlands shall be restricted to the construction limits shown on the Plans and to those areas that must be entered for the construction of temporary or permanent structures, except as allowed by approved permit or otherwise authorized by the Authority in writing. Mechanized equipment shall not be operated in water bodies or wetlands except as allowed by approved permit or otherwise authorized by the Authority in writing.
5. Upon completion of the work, water bodies or wetlands shall be promptly cleared of all falsework, piling, debris or other obstructions caused by the construction operations, except as allowed by approved permit or otherwise authorized by the Authority in writing.

(b) Earthwork

If earthwork disturbance is part of the Project scope:

1. Newly disturbed earth shall be mulched or otherwise stabilized by the end of each workday. Mulch shall be maintained on a daily basis.
2. All disturbed ditches shall be stabilized by the end of each workday. Stabilization shall be maintained on a daily basis.
3. Erosion control blanket shall be installed in the bottom of all ditches except where a stone lining is planned. Seed shall be applied prior to the placement of the blanket.
4. Permanent slope stabilization measures shall be applied within one (1) week of the last soil disturbance. Newly seeded or sodded areas must be protected from vehicle traffic, excessive pedestrian traffic, and concentrated runoff until the vegetation is well-established. If necessary, areas must be reworked and restabilized if germination is sparse, plant coverage is spotty, or topsoil erosion is evident.
5. Dust control items, other than those under Standard Specification Section 637, Dust Control, if applicable, shall be included in the plan.

105.8.1.12 Construction Requirements

1. The Contractor, to the maximum extent practicable, shall install temporary and permanent sedimentation control measures prior to conducting clearing and grubbing operations.
2. The Contractor shall conduct inspections of disturbed and impervious areas, erosion control measures, materials storage areas that are exposed to precipitation, and locations where vehicles enter or exit the site. Inspections shall be conducted: (1) at least once a week as well as before and after a storm event and prior to completing permanent stabilization measures; and (2) by a person knowledgeable of erosion and stormwater control, including the standards and conditions in the permit.
3. The Contractor shall maintain all measures in effective operating condition until areas are permanently stabilized. If BMPs need to be modified (i.e., corrective

action, additional BMPs installed, etc.), implementation must be completed within seven (7) calendar days and prior to any storm event.

4. Temporary erosion control measures shall be maintained until the site is permanently stabilized with vegetation or other permanent control measures.
5. The Contractor will immediately take appropriate measures to prevent erosion or sedimentation from occurring or to correct any existing problems regardless of the time of year.
6. During periods of approved suspension, the Contractor shall inspect and maintain temporary and permanent erosion and sedimentation controls.
7. Work in wetlands is prohibited except to the minimum extent necessary for completion of the work as detailed on the Plans. Excavated and other material shall not be stockpiled in wetlands. Haybales, silt fence or other suitable barriers shall be used, where necessary, to prevent sedimentation from eroding materials.
8. Disturbance of natural resources beyond the construction limits shown on the Plans is not allowed.
9. Existing ditches shall be maintained until the new ditches are stabilized. Stone check dams shall be placed in existing ditches prior to construction as to prevent the release of sedimentation. Stone check dams shall be installed at the outlets of all existing and proposed ditches adjacent to all stream and wetlands.
10. For proposed ditches, stabilize the outlet first and build from the bottom up. Only excavate what can be stabilized or protected by the end of the work day.
11. Before permitting permanent channels to carry water, they shall be stabilized. This may require the installation of temporary erosion control BMP's or temporarily diverting flows.
12. All cross culvert outlets shall be armored before the end of the work day.
13. The Contractor's operation may require the placement of temporary pipes and fill over a ditch line to provide access to the work area. The Resident shall approve the size of the pipe. The placement and removal of the temporary access shall not be measured for payment and shall be incidental to the Excavation item.
14. Bare earth slopes shall be roughened to dissipate sheet flow. This shall be accomplished by "tracking" the slope perpendicular to the centerline. This work will not be measured separately for payment, but shall be incidental to the Excavation item.
15. Uncured concrete shall not be placed directly into the water body. Concrete may be placed in forms and shall cure at least one (1) week prior to form removal. No washing of tools, forms, etc. shall occur in or adjacent to the water body or wetland.
16. The Contractor shall contain all demolition debris (including debris from wearing surface removal, sawcut slurry, dust, etc.) and shall not allow it to discharge to any resource. Litter, construction debris, and chemicals exposed to stormwater must be prevented from becoming a pollutant source. The Contractor shall dispose of debris in accordance with Maine Solid Waste Law, Title 38 M.R.S.A., Section 1301 et. seq.
17. No wheeled or tracked equipment shall be operated in the water. Equipment operating on the shore may reach into the water with a bucket or similar extension. Equipment may NOT cross streams.

18. The Contractor shall not remove rocks from below the normal high water line of any wetland, great pond, river, stream or brook, except to the extent necessary for completion of the work and as allowed by environmental permits.

105.8.2 Permit Requirements

The Project is being constructed under the Maine Department of Environmental Protection (DEP) Natural Resources Protection Act Permit by Rule regulations Section 11 – State Transportation Facilities, updated July 15, 2009. Final permit authorization is anticipated prior to contract bid opening. An addendum will be issued acknowledging the receipt or denial of the permit; providing the actual MaineDEP permit conditions, and providing Plan and Specification changes if required. A copy of the Section 11 – State Transportation Facilities Permit by Rule regulations are attached in Appendix A.

The Project is being permitted under Section 404 of the Clean Water Act, through the US Army Corps of Engineers Programmatic General Permit, Category 1. The Project is subject to the General Conditions of the Category 1 Authorization dated October 12, 2010 through October 12, 2015. A copy of the General Permit is attached in Appendix A.

The Contractor shall prepare a LOD plan illustrating the Contractor's proposed limit of earthwork disturbance. The LOD plan shall show all construction access locations, field office locations, material and temporary waste storage locations, as well as include the Contract limits of earthwork disturbance. All applicable erosion and sedimentation control devices needed shall be detailed on the Contractor's LOD plan and are not limited to those devices shown on the Contract LOD plan. **This Plan shall be submitted for review and approval, to the Resident within 14 days of Contract award.** Payment for creating, revising, and completing this plan shall be incidental to Item 659.10, Mobilization.

The LOD for this Contract has been estimated to be **4.1** acres.

At any time during the Contract, if the Limit of Disturbance needs to be adjusted to accommodate construction activities, the Contractor shall resubmit the LOD plan (including any additional erosion and sedimentation control measures needed) to the Resident for review and approval prior to any additional disturbance taking place:

- If the cumulative area of disturbance exceeds the estimated LOD noted above, for a total less than one acre, the Resident shall have a minimum of five (5) working days to approve the revised LOD plan.
- If the cumulative area of disturbance exceeds one acre, the Resident shall first approve of the plan and then submit a MPDES Construction General Permit NOI for MaineDEP approval. The approval will take a minimum of 14 working days.

Compliance with the erosion and sedimentation control requirements outlined in this Contract is required by the Contractor.

The Contractor shall comply with the conditions outlined in the Army Corps General Permit, Maine Department of Environmental Protection NRPA Permit by Rule, the US Army Corps of Engineers General Permit, and the Maine Pollutant Discharge Elimination System General Permit for stormwater discharge associated with construction activity. The Contractor shall indemnify and hold harmless the Maine Turnpike Authority or its agents, representatives and employees against any and all claims, liabilities or fines arising from or based on the violation of the above noted permits.

105.8.3 Wetland and Water Body Impacts

The following locations are classified as streams:

No Name Stream	5103+75

Prior to starting work, the Contractor shall submit for approval a detailed construction plan for each stream crossing. The plan shall outline the schedule, equipment, and materials the Contractor will utilize to construct the culvert extension in accordance with the Plans.

107.1 Contract Time and Contract Completion Date

This Subsection is amended by the addition of the following:

The Contract start date will be April 08, 2015 and all work shall be completed on or before November 01, 2016. The Project shall be substantially complete by August 16, 2016.

107.1.1 Substantial Completion

This Subsection is amended by the addition of the following:

Substantially complete shall be defined by the Authority as the following:

- All Contract work is complete
- No lane closures are required to complete work
- Toll systems infrastructure has been completed per required milestones and is acceptable to the Authority
- Only “punch list” items remain

Supplemental Liquidated damages on a calendar day basis in accordance with Subsection 107.7.2 shall be assessed for each calendar day that substantial completion is not achieved. Supplemental Liquidated damages for substantial completion will end when substantial completion is accepted by the Resident. If the work remains incomplete at the Contract Completion Date, liquidated damages on a calendar day basis in accordance with Subsection 107.7.2 shall be assessed for each calendar day that Contract completion is not achieved. If substantial completion is not completed by the Contract Completion date both supplemental liquated damages and liquated damages will be incurred.

107.4.2 Schedule of Work Required

This Subsection is amended by the addition of the following:

The work shall be completed in logical timely increments. The Contractor shall submit a schedule for review that shows large segments of work scheduled for continuous blocks of time. Work in a segment shall be completed over a period of continuous work days. Work shall not be started in an area until the Contractor has scheduled the labor and equipment necessary to complete all work in the segment. The Contractor will not be permitted to "stretch" the Project over the entire Contract period, doing a day or two work per week.

A schedule that shows sporadic work activities through the duration of the Contract will not be approved. Actual work activities that are sporadic will not be allowed.

A two (2) week schedule shall be submitted by the Contractor weekly, the first week shall be detailed. The weekly detailed schedule shall show all lane closures that are anticipated for the following week. Lane closures that are not shown on this schedule will only be allowed if they are deemed emergency lane closures by the Resident.

The following Subsection is added:

107.4.6 Prosecution of Work

The following is a summary of the Construction Phases and the key dates:

Phase 1A: Project Start to Interim Completion Date 1A.

The following is a summary of the Construction Phases and the key dates:

Reconstruction of NB Lane 1 and SB Lane 8.

The Contractor shall complete all concrete and electrical work associated with NB Lane 1 and SB Lane 8 and island extension to the construction joint for Island A and G, have them commissioned by the System Integrator and the Authority and open to traffic by Interim Completion Date 1A. The new southbound parking area and all associated work except for surface pavement shall also be completed prior to opening Lane 8 but may remain closed until surface pavement is complete or the start of Phase 2.

If the Contractor chooses to complete the island extension in Phase 1A, and pavement surrounding Islands A and G is not complete, temporary aggregate base course crushed shall be constructed to final grade at no additional cost to allow System Integrator to begin Lane 1 and Lane 8 toll system testing. The SI will need 10 working days to commission Lanes 1 and 8.

Phase 1B: Remainder of Cash Lane Work and Shoulder Widening Work

The Contractor shall complete all concrete and electrical work required for NB Lane 2 and SB Lane 7 and have them commissioned by the System Integrator and the Authority, as well as all concrete, earth work; temporary paving installation for the space frame foundations and island extensions for Islands A and G from construction joint to end of the island.

Phase 2: ORT Construction

All work shall be complete by the substantial completion date with the exception of the closure of median guardrail openings for looping ORT testing traffic after ORT testing is complete. The System Integrator shall commence commissioning testing after substantial completion and complete the testing no later than October 17, 2016.

Once the System Integrator completes commission testing, the Contractor shall schedule closing of the median guardrail openings and opening of the ORT lanes with the Authority.

It is the Contractor's responsibility to maintain long-term lane closures of the ORT zones and maintain all proposed ORT signage covers until the ORT lanes are open to traffic. At the Authority's discretion, opening may be accelerated if all required work is complete, but any such acceleration is still subject to the schedule terms in these Specifications.

Supplemental liquidated damages of Five Thousand ($5,000.00) Dollars per calendar day per the following dates shall be assessed for each calendar day that activities listed below are not completed:

	Liquidated Damages Date	Supplemental Liquidated Damage per Calendar Day	Max
Interim Completion Date 1A	June 12, 2015	$5,000	N/A

The "day" begins at 12:01 a.m. and ends at 12:00-midnight.

107.4.7 Limitations of Operations

All in-water work for the culvert extensions at 5103+75 shall be completed between July 15, 2015 and October 1, 2015.

Wide loads will be allowed to pass through the Project area during daylight hours as authorized by the Authority with the exception of the Phase 1A. Wide loads are restricted from moving on the turnpike from a half hour after sunset until a half hour before sunrise. Wide loads must be able to safely pass all daytime work areas.

The Contractor will be allowed to mill the entire work area prior to beginning the paving operation in the work area provided the milled areas can be surfaced within two weeks.

Temporary ramps shall be installed if the milling and paving operation do not occur in the same closure(s). Temporary bituminous ramps, incidental to paving operations, shall be a minimum 35 feet per two inches of pavement elevation change and will be required at all butt joints. The Contractor shall submit his milling and paving schedule for review and acceptance.

The Contractor shall limit the construction operations such that temporary pavement markings or pavement markers are applied daily prior to the roadway being open to traffic.

Care shall be taken when working near catch basins to ensure foreign material and contaminants do not enter the basin. If foreign material and/or contaminants enter the basin, it shall be removed prior to the material exiting the basin into a waterway. Removal shall be completed to the satisfaction of the Resident and payment shall be incidental to the Contract.

The Contractor shall submit his proposed staging and storage areas for approval by the Resident. All stored equipment must be outside of the clear zone. Proposed equipment storage locations shall be selected based on (1) proximity to UIS/Protected Natural Resources; (2) minimizing rutting or other actions that may hinder sheet flow from roadway; and (3) spill control and prevention, in the event of a fluid release from the equipment.

There shall be no H-pile or sheet pile driving during non-daylight hours. Pile driving will not be allowed within 10 feet of traffic.

The following Subsection is added:

107.4.9 Failure to Stop Work When Directed

In the event the Authority determines that the safety of the turnpike users (public) might be unduly compromised if work on the Project is not halted; the Resident Engineer, Resident Inspector or other authorized Authority representative will notify the Contractor to stop work. This may include directives to the Contractor to remove lane closures due to significant traffic delays. If the Contractor refuses to stop work within the time frame determined by the Authority, the Contractor will not be allowed to recommence work until after the Contractor meets with the Authority. In addition, work completed after the time allotted by the Authority to stop work will not be measured for payment.

107.6 Completion Incentive and Disincentive

This Subsection is amended by the addition of the following:

The Authority will pay the Contractor an incentive per calendar day for each day work required to be complete by an Interim Completion date is achieved prior to the date specified in Subsection 107.4.6. The Contractor will pay the Authority a disincentive per calendar day for each day the work required to satisfy an Interim Completion date is not complete. The date, incentive/disincentive per calendar day and the maximum incentive/disincentive associated with each Interim Completion date is listed in the following table.

	Date	Incentive/ Disincentive per Calendar Day	Max Incentive	Max Disincentive
Interim Completion Phase1A	June 12, 2015	$5,000	$50,000	N/A

The "day" begins at 12:01 a.m. and ends at 12:00-midnight.

Payment for incentive or deduct for supplemental liquidated damages will be included in the pay requisitions after the Interim Completion date.

The incentive payment will be treated as a "no excuse date". The Authority will not allow any excuses by the Contractor, including but not limited to, Contract adjustments, material supply schedule, coordination with System Integrator, and weather.

107.7.2 Schedule of Liquidated Damages

The table of liquidated damages is deleted and replaced with the following:

Original Contract Amount From More Than	Original Contract Amount up to and Including	Amount of Liquidated Damages per Calendar
$0	$100,000	$225
$100,000	$300,000	$350
$300,000	$500,000	$475
$500,000	$1,000,000	$675
$1,000,000	$2,000,000	$900
$2,000,000	$4,000,000	$1,000
$4,000,000	and more	$2,100

108.4 Payment for Materials Obtained and Stored

This Subsection in the General Provisions is deleted and not replaced.

This Subsection of the Standard Specifications is deleted and replaced with the following:

Acting upon a request from the Contractor, accompanied by the required documentation, the Authority will pay for all or part of the value of acceptable, non-perishable Materials that are to be incorporated in the Work, including Materials that are to be incorporated into the Work not delivered on the Work site, and stored at places acceptable to the Authority (e.g. at a facility controlled by the Contractor or his Subcontractor\Fabricator). Examples of such Materials include steel piles, structural steel, prestressed concrete beams and slabs, stone masonry, curbing, timber and lumber, metal culverts, and other similar Materials. The Authority will not make payment on living or perishable Materials until acceptably planted in their final locations.

For structural steel fabrication, the Authority will not make partial payments for expenses such as shop drawing development, overhead, transportation, rent, storage, heat, Contractor mark-ups or other items until after fabrication has commenced. Payment will be based on the Authority's determination of percent complete at the close of the period.

As a condition of payment, the Contractor or their Subcontractor\Fabricator shall provide the following:

1. Proof that all Materials are stored in a secure location acceptable to the Authority.
2. Detailed invoices from the material supplier including a summary of the Materials provided, quantities shipped and received, unit costs, taxes, transportation fees, and all other charges included in the invoice total.
3. Copies of mill certifications, or other material certifications, as required by the Specifications relevant to the Materials.
4. Right of access for the Authority, or its duly authorized agent, to inspect and quantify the Materials at the approved storage site.
5. Proof of insurance for the stored Materials. The Contractor or his Subcontractor\Fabricator shall carry insurance, equal to 100% of the replacement value of the Materials, for all stored Materials. The Maine Turnpike Authority shall be named as an Additional Insured on the insurance policy.

If payment for Materials obtained and stored by the Contractor's Subcontractor\Fabricator is made to the Contractor, then the Contractor must provide proof of payment from his Subcontractor\Fabricator within 14 calendar days of the date the Contractor receives payment for the Materials. Failure by the Contractor to provide timely proof of payment for these Materials will result in the paid amount being withheld from the subsequent progress payment, or payments, until such time proof of payment is received by the Authority.

Materials paid for by the Authority will become the property of the Authority, but the risk of loss shall remain with the Contractor. Payment for Materials does not constitute acceptance of the Material. If Materials for which the Authority has paid are later found to be unacceptable, then the Authority may withhold amounts reflecting such unacceptable Materials from payments otherwise due the Contractor.

In the event of Default, the Authority may use, or cause to be used, all paid-for-Materials in any manner that is in the best interest of the Authority.

108.4.1 Price Adjustment for Hot Mix Asphalt

This Subsection in the General Provisions is deleted and replaced with the following:

For Contracts containing an excess of 500 tons of bituminous pavement, an asphalt price adjustment will be made for all bituminous concrete placed after the bid date of the Contract. No asphalt price adjustment will be allowed for Contracts containing less than 500 tons.

Price adjustments will be based on the variance in cost for the performance-graded binder component of the hot mix asphalt. The quantity of hot mix asphalt for each pay item will be multiplied by performance graded binder given in the table below, times the difference in price between the base price and the period price of asphalt cement. Adjustments will be made upward or downward, as prices increase or decrease. The quantity of Hot Mix Asphalt will be determined from the quantity shown on the progress estimate for each pay period. The base price of performance graded binder to be used is the price per standard ton current with the bid opening date. The period price of performance grade binder shall be determined by the Authority by using the average New England Selling Price and shall be the price per standard ton current with the ending date of the progress estimate. The Authority will determine the price adjustment weekly as prices increase or decrease and the sum of the weekly totals will be included in the monthly payment. No price adjustment will be made after the substantial completion date. The last price listed before the substantial completion will be used for pavement placed after the substantial completion date. The prices shall be determined by using the average New England Selling Price, as listed in the Asphalt Weekly Monitor.

Item 403.207	Hot Mix Asphalt - 19 mm	5.2%
Item 403.208	Hot Mix Asphalt - 12.5 mm	5.6%
Item 403.2083	Hot Mix Asphalt - 12.5 mm	5.6%
Item 403.209	Hot Mix Asphalt - 9.5 mm (sidewalks, drives, & incidentals)	6.2%
Item 403.211	Hot Mix Asphalt - Shim	6.2%
Item 403.213	Hot Mix Asphalt - 12.5 mm (base and intermediate course)	5.6%

109.7.3 Compensable Items

The following is added to Item 3.:

3. "A maximum 15% markup will be allowed on the total..."

The following is added to the end of the paragraph:

4. ..."if determined by the Authority to be lower."

SPECIAL PROVISION

SECTION 202

REMOVING STRUCTURES AND OBSTRUCTIONS

(Removing Existing Manholes or Catch Basins)

202.05 Removing Manholes or Catch Basins

The following sentence is added:

Frames and grates shall be removed, transported and stacked at the Gardiner Maintenance Area located at Mile 101.8 Northbound.

202.07 Method of Measurement

The last paragraph is deleted and replaced with the following:

Removing Manholes or Catch Basins will be measured by each unit satisfactorily removed.

202.08 Basis of Payment

The following is added after the first sentence of the fourth paragraph:

Removing, transporting and stacking the frames and grates will not be paid for separately, but shall be incidental to the Removing Existing Manholes or Catch Basin item.

SPECIAL PROVISION

SECTION 202

REMOVING STRUCTURES AND OBSTRUCTIONS

(Removing Existing Structural Concrete)

202.01 Description

The following paragraphs are added:

This work shall include removal and disposal of the existing pavement, approach slabs, and toll island slabs including bumpers and booth enclosures as shown on the Plans.

All removed concrete materials shall become the property of the Contractor and shall be removed from the site at the completion of the Project. The Contractor shall provide the Resident with an affidavit stating the final location of all disposed material and that the material was disposed of in accordance with the Maine Department of Environmental Protection Solid Waste Regulations.

SPECIAL PROVISION

SECTION 202

REMOVING STRUCTURES AND OBSTRUCTIONS

(Removing Pavement Surface)

202.01 Description

The following sentence is added:

This work shall also consist of removing the surface of the bituminous pavement to the depth, width, grade, and cross section as shown on the Plans or as approved by the Resident.

The following Subsection is added:

202.061 Removing Pavement

The equipment for removing the bituminous surface shall be a power-operated milling machine or planer capable of removing the bituminous concrete pavement to the required depth. The milling machine shall be capable of accurately establishing profile grades by referencing from a floating straight edge, a minimum of 50 feet. The equipment shall also have an effective means for removing excess material from the surface and for preventing accidents from flying material in compliance with Subsection 105.2.45, Compliance with Health and Safety Laws.

All pavement grindings shall be disposed of by the Contractor off of the turnpike right-of-way in accordance with the Maine Department of Environmental Protection Solid Waste Management Requirements.

SPECIAL PROVISION

SECTION 203

EXCAVATION AND EMBANKMENT

This Section is amended as follows:

All references to "waste storage areas" shall be deleted.

203.01 Description

The following paragraph is added:

This work shall consist of cutting, removing and disposing of the full depth of existing bituminous concrete pavement within the limits of full depth pavement excavation as shown on the Plans or as approved by the Resident. The pavement shall be sawcut to the full depth of pavement at the limits of the excavation to provide a clean, vertical cut surface.

203.04 General

The third paragraph is deleted and replaced with the following:

There are no approved waste storage areas or waste areas within the Project limits. Unsuitable materials shall be disposed of off-site in accordance with Subsection 203.06.

Any temporary earth support required to install or remove drainage structures and utilities and support existing or proposed utilities will not be measured separately for payment, but shall be incidental to the Excavation items.

All excavations shall be accomplished in accordance with the applicable OSHA Standards. The Resident reserves the right to request the Contractor to prepare an excavation plan. This plan shall include, but not necessarily be limited to, the limit and depth of excavation, side slope, shoring, trench box and utility support.

203.10 Embankment Construction - General

The thirteenth and fourteenth paragraphs are deleted and replaced with the following:

All portions of the embankment shall be compacted in accordance with the designated embankment compaction requirements specified for the Project.

The existing slopes should be benched as shown on the drawings prior to placing additional fill. Embankment fill should be placed in lifts which extend laterally beyond the limits of the design side slopes such that the specified degree of compaction is achieved within the limits of the completed embankment. The slopes should then be trimmed back to design dimensions.

203.11 Construction of Earth Embankment - Layer Method

The second, third, and fourth paragraphs are deleted and replaced with the following:

Layers shall be placed in lifts not to exceed 12 inches after compaction. Common borrow shall be compacted using vibratory compaction equipment to 92 percent of the material's maximum dry density as determined by ASTM D-1557. The compacted material shall appear firm and stable. Strict moisture control shall be utilized by the Contractor when using a cohesive fill material and the moisture content of the compacted material should not exceed four percent above the material's optimum moisture content.

The first sentence of the fourth paragraph is amended as follows:

Satisfactory compaction of granular borrow is defined as not less than 95 percent of the maximum density.

203.12 Construction of Earth Embankment with Moisture and Density Control

The last sentence of the second paragraph is amended as follows:

Each granular borrow layer placed with controlled moisture shall be compacted to not less than 95 percent of the maximum density.

The following paragraph is added:

Common borrow shall be placed in lifts not to exceed 12 inches after compaction. Common borrow shall be compacted using vibratory compaction equipment to 92 percent of the material's maximum dry density as determined by ASTM D-1557. The compacted material shall appear firm and stable. Strict moisture control shall be utilized by the Contractor when using a cohesive fill material and the moisture content of the compacted material should not exceed four percent above the material's optimum moisture content.

203.16 Winter Construction of Embankments

The word "core" is deleted from the first and second sentences in the first paragraph.

203.18 Method of Measurement

Any reference to borrow will be deleted from the first paragraph.

The pay quantity of common borrow and granular borrow shall be 115 percent of the compacted quantity measured in place.

The following sentence is added:

There will be no additional payment for the required excavation plan, and costs shall be incidental to the Excavation items.

SPECIAL PROVISIONS

SECTION 203

EXCAVATION AND EMBANKMENT

(Common Borrow, Truck Measure)

203.01 Description

The following sentence is added:

This work shall also consist of furnishing, grading and compacting common borrow used for slope widening in areas of new guardrail or as approved by the Resident.

203.04 General

The following paragraph is added:

Existing excavation shall be used as fill material. Unsuitable material shall be disposed of as directed and no material shall be wasted without permission. Common borrow will only be paid for when it is brought on-site from an outside source.

203.18 Method of Measurement

The following paragraph is added:

Common Borrow will be measured for payment by the cubic yard, truck measure, at 85 percent of measured volume. The measurement will be in vehicles at the point of delivery as shown on delivery slips.

203.19 Basis of Payment

The following paragraph is added:

The accepted quantity of Common Borrow, Truck Measure will be paid for at the Contract unit price per cubic yard.

Payment will be made under:

Pay Item		Pay Unit
203.241	Common Borrow, Truck Measure	Cubic Yard

SPECIAL PROVISIONS

SECTION 205

SHOULDER RECONSTRUCTION

(Widening of Existing Shoulder)

205.01 Description

The following paragraph is added:

This work shall consist of widening existing outside shoulders in areas of proposed single rail guardrail, locations show on the Plans or as approved by the Resident. The widening shall be done by excavating, furnishing, placing, grading and compacting aggregate subbase course gravel, granular borrow, and common borrow in accordance with the thickness and typical sections shown on the Plans.

The following Subsections are added:

205.021 Granular Borrow

Granular borrow shall be material meeting the requirements of Subsection 703.19.

205.022 Fill Material

Fill material shall be existing excavation or common borrow from an outside source.

205.024 Aggregate Subbase Course-Gravel

Aggregate subbase course-gravel shall be material meeting the requirements of Subsection 703.06.

205.06 Method of Measurement

The following sentences are added:

The quantity of widening of existing shoulder, plan quantity measured for payment will be per linear foot at locations noted on the Plans.

The quantity of Common Borrow- Truck Measure, Hot Mix Asphalt, Loam, Seed, Mulch and Erosion Control Blanket will be paid under their respective items.

205.11 Basis of Payment

The following paragraph is added:

The accepted quantity of Widening Existing Shoulder will be paid for at the Contract unit price per linear foot which shall include the excavation, aggregate subbase course gravel and granular borrow.

Payment will be made under:

Pay Item		Pay Unit
205.51	Widening of Existing Shoulder, Plan Quantity	Linear Foot

SPECIAL PROVISION

SECTION 206

STRUCTURAL EXCAVATION

This Section is amended as follows:

All references to "waste storage areas" shall be deleted.

206.01 Description

The following is added after the first paragraph:

This work also shall consist of excavating and removal of earth materials at the ORT slabs, grade beams and departure slabs within the limits of work as shown on the Plans or as approved by the Resident.

206.02 Construction Methods

The following paragraphs are added:

There are no approved waste storage areas or waste areas within the Project limits. Unsuitable materials shall be disposed of off-site in accordance with Subsection 203.06.

The bituminous pavement shall be disposed of by the Contractor off the Turnpike Right-of-Way. All bituminous pavement shall be disposed of in accordance with Chapter 404 of the Maine Department of Environmental Protection Solid Waste Management Regulations.

206.04 Method of Measurement

The following paragraph is added:

Excavation required to expose repair areas will be paid for under Item 206.08, Structural Earth Excavation - Major Structures. Backfill of the repair areas, not requiring gravel or hot bituminous pavement, will not be measured separately for payment, but shall be incidental to the Structural Earth Excavation item.

206.05 Basis of Payment

The following is added after the first paragraph:

The work shall also include all materials, equipment and labor associated with excavating, backfilling and compacting areas of structural excavation.

Payment will be made under:

Pay Item		Pay Unit
206.08	Structural Earth Excavation – Major Structures	Cubic Yard

SPECIAL PROVISION

SECTION 401

HOT MIX ASPHALT PAVEMENT

The following Specification is based on the MaineDOT February 11, 2009 Specification for Division 400, Pavements.

Section 401, Hot Mix Asphalt is deleted in its entirety and is replaced by the following:

401.01 Description

The Contractor shall furnish and place one or more courses of Hot Mix Asphalt Pavement (HMA) on an approved base in accordance with the Contract documents and in reasonably close conformity with the lines, grades, thickness, and typical cross sections as shown on the Plans or established by the Resident. The Authority will accept this work under Quality Assurance provisions, in accordance with these Specifications and the requirements of Section 106, Quality, the provisions of AASHTO M 323, except where otherwise noted in Sections 401 and 703 of these Specifications, and the MaineDOT Policies and Procedures for HMA Sampling and Testing.

401.02 Materials

Materials shall meet the requirements specified in Section 700, Materials:

- Asphalt Cement 702.01
- Aggregates for HMA Pavement 703.07
- HMA Mixture Composition 703.09

401.021 Recycled Asphalt Materials

Recycled Asphalt Pavement (RAP) may be introduced into the mixture at percentages approved by the Authority. If approved by the Authority, the Contractor shall provide documentation stating the source, average test results for average residual asphalt content, and stockpile gradations showing RAP materials have been sized to meet the maximum aggregate size requirements of each mix designation. The Authority will obtain samples for verification and approval prior to its use.

In the event that RAP source or properties change, the Contractor shall notify the Authority of the change and submit new documentation stating the new source or properties a minimum of 72-hours prior to the change to allow for obtaining new samples and approval.

The RAP shall be from an interstate highway and be from a Class I designated stockpile source.

401.03 Composition of Mixtures

The Contractor shall compose the Hot Mix Asphalt Pavement with aggregate, Performance Graded Asphalt Binder (PGAB), and mineral filler if required. HMA shall be designed and tested according to AASHTO R35 and the volumetric criteria in Table 1. The Contractor shall size, uniformly grade, and combine the aggregate fractions in proportions that provide a mixture meeting the grading requirements of the Job Mix Formula (JMF). The Contractor may use a maximum of 15 percent reclaimed asphalt pavement (RAP) in any base, binder, surface, or shim course. The Contractor may be allowed to use more than 15 percent RAP, up to a maximum of 25 percent RAP, in a base, binder, or shim course provided that PG 58-34 asphalt binder is used in the mixture.

The MaineDOT (Department), or an independent consultant approved by the Authority, will be providing the mix design verification (Job Mix Formula) for the Authority's approval. The Job Mix Formula (JMF) will be sent to the Department's Central Laboratory in Bangor, Maine. The samples will be obtained by the Department for laboratory testing. Before the start of paving, the Contractor and the Department will split a sample for verification of design before production will be allowed. The Contractor shall submit for Authority approval a JMF for each mixture to be supplied. The Authority may approve one (1) active design per nominal maximum size, per traffic level, per plant, plus a 9.5 mm "fine" mix @ 50 gyrations for shimming, and where required, a non-RAP design for bridge decks. The Authority shall then have 15 calendar days in which to process a new design before approval. The JMF shall establish a single percentage of aggregate passing each sieve size within the limits shown in Subsection 703.09. The mixture shall be designed and produced, including all production tolerances, to comply with the allowable control points for the particular type of mixture as outlined in Subsection 703.09. The JMF shall state the original source, gradation, and percentage to be used of each portion of the aggregate and mineral filler if required. It shall also state the proposed PGAB content, the name and location of the refiner, the supplier, the source of PGAB submitted for approval, the type of PGAB modification if applicable, and the location of the terminal if applicable.

In addition, the Contractor shall provide the following information with the proposed JMF:

- Properly completed JMF indicating all mix properties (Gmm, VMA, VFB, etc.).
- Stockpile Gradation Summary.
- Design Aggregate Structure Consensus Property Summary.
- Design Aggregate Structure Trial Blend Gradation Plots (0.45 power chart).
- Trial Blend Test Results for at least three different asphalt contents.
- Design Aggregate Structural for at least three trial blends.
- Test results for the selected aggregate blend at a minimum of three binder contents.
- Specific Gravity and temperature/viscosity charts for the PGAB to be used.
- Recommended mixing and compaction temperatures from the PGAB supplier.
- Material Safety Data Sheets (MSDS) For PGAB.
- Asphalt Content vs. Air Voids trial blend curve.
- Test report for Contractor's Verification sample.

- Summary of RAP test results (if used), including count, average and standard deviation of binder content and gradation.

At the time of JMF submittal, the Contractor shall identify and make available the stockpiles of all proposed aggregates at the plant site. There must be a minimum of 150 ton for stone stockpiles, 75 ton for sand stockpiles, and 50 ton of blend sand before the Authority will sample. The Authority shall obtain samples for laboratory testing. The Contractor shall also make available to the Authority the PGAB proposed for use in the mix in sufficient quantity to test the properties of the asphalt and to produce samples for testing of the mixture. Before the start of paving, the Contractor and the Authority shall split a production sample for evaluation. The Contractor shall test its split of the sample and determine if the results meet the requirements of the Department's written policy for mix design verification (See Maine DOT Policies and Procedures for HMA Sampling and Testing available at the Central Laboratory in Bangor). If the results are found to be acceptable, the Contractor will forward their results to the Authority's Lab, which will test the Authority's split of the sample. The results of the two split samples will be compared and shared between the Authority and the Contractor. If the Department finds the mixture acceptable, an approved JMF will be forwarded to the Authority. The Authority will then notify the Contractor that paving may commence. The first day's production shall be monitored, and the approval may be withdrawn if the mixture exhibits undesirable characteristics such as checking, shoving or displacement. The Contractor shall be allowed to submit aim changes within 24-hours of receipt of the first Acceptance test result for an individual JMF. Adjustments will be allowed of up to 2% on the percent passing the 2.36 mm sieve through the 0.075 mm and 3% on the percent passing the 4.75 mm or larger sieves. Adjustments will be allowed on the %PGAB of up to 0.2 percent. Adjustments will be allowed on Gmm of up to 0.010.

The Contractor shall submit a new JMF for approval each time a change in material source or materials properties is proposed. The same approval process shall be followed. The cold feed percentage of any aggregate may be adjusted up to 10 percentage points from the amount listed on the JMF, however no aggregate listed on the JMF shall be eliminated. The cold feed percentage for RAP may be adjusted up to five percentage points from the amount listed on the JMF but shall not exceed the maximum allowable percentage for RAP for the specific application.

TABLE 1
VOLUMETRIC DESIGN CRITERIA

Design ESAL's (Millions)	Required Density (Percent of G_{mm})			Voids in the Mineral Aggregate (VMA)(Minimum Percent) Nominal Maximum Aggregate Size (mm)					Voids Filled with Binder (VFB) (Minimum %)	Fines/Eff. Binder Ratio
	$N_{initial}$	N_{design}	N_{max}	25	19	12.5	9.5	4.75		
<0.3	≤91.5	96.0	≤98.0	13.0	14.0	15.0	16.0	16.0	70-80	0.6-1.2
0.3 to <3	≤90.5								65-80	
3 to <10	≤89.0								65-80*	
10 to <30										
≥ 30										

** For 9.5 mm nominal maximum aggregate size mixtures, the maximum VFB is 82.*

** For 4.75 mm nominal maximum aggregate size mixtures, the maximum VFB is 84.*

**For 4.75mm nominal maximum aggregate size mixtures, the Fines/Effective Binder Ratio is 0.6-1.4*

401.031 Warm Mix Technology

The Contractor may place Hot Mix Asphalt Pavement produced with an accepted WMA technology if approved by the Authority. Methods or technologies shall generally be at the Contractors' option, but will be limited to proven, Agency and Industry accepted practice. Mixture production, placement and volumetric testing details, including temperatures, shall be included in the project specific QCP, submitted to the Authority for approval prior to any work.

401.04 Temperature Requirements

After the JMF is established, the temperatures of the mixture shall conform to the following tolerances:

- In the truck at the mixing plant – allowable range 275° to 325°F.
- At the paver – allowable range 275° to 325°F.
- Or the recommendations, approved by the Authority, from the Asphalt Binder supplier.

The JMF and the mix subsequently produced shall meet the requirements of Table 1 and Subsection 703.07.

401.05 Performance Graded Asphalt Binder

Unless otherwise noted in Special Provision Section 403, Hot Bituminous Pavement, PGAB shall be 64-28, except that for mixtures containing greater than 15 percent but no more than 25 percent RAP the PGAB shall be PG 58-34. The PGAB shall meet the applicable requirements of AASHTO M320 - Standard Specification for PGAB. The Contractor shall

request approval from the Authority for a change in PGAB supplier or source by submitting documentation stating the new supplier or source a minimum of 24-hours prior to the change. In the event that the PGAB supplier or source is changed, the Authority shall make efforts to minimize the occurrence of PGAB co-mingling.

401.06 Weather and Seasonal Limitations

The Contractor may place Hot Mix Asphalt Pavement for use other than a traveled way wearing course, provided that the air temperature as determined by an approved thermometer (placed in the shade at the paving location) is 40°F or higher and the area to be paved is not frozen. The Contractor may place Hot Mix Asphalt Pavement as traveled way wearing course, provided the air temperature determined as above is 45°F or higher. For the purposes of this Section, the traveled way includes truck lanes, ramps, approach roads and auxiliary lanes. The atmospheric temperature for all courses on bridge decks shall be 50°F or higher.

Hot Mix Asphalt Pavement used for curb, driveways, sidewalks, islands, or other incidentals is not subject to seasonal limitations, except that conditions shall be satisfactory for proper handling and finishing of the mixture. All mixtures used for curb, driveways, sidewalks, islands, or other incidentals shall conform to Subsection 401.04, Temperature Requirements. Unless otherwise specified, the Contractor shall not place Hot Mix Asphalt Pavement on a wet or frozen surface and the air temperature shall be 40°F or higher.

On all sections of overlay with wearing courses one inch thick or less, the wearing course for the travelway and adjacent shoulders shall be placed provided the air temperature is determined as above 50°F or higher.

401.07 Hot Mix Asphalt Plant

401.071 General Requirements

HMA plants shall conform to AASHTO M156.

a. Truck Scales - When the hot mix asphalt is to be weighed on scales meeting the requirements of Section 108, Payment, the scales shall be inspected and sealed by the State Sealer as often as the Authority deems necessary to verify their accuracy.

Plant scales shall be checked prior to the start of the paving season, and each time a plant is moved to a new location. Subsequent checks will be made as determined by the Resident. The Contractor will have at least ten 20 Kg [50 pound] masses for scale testing.

401.072 Automation of Batching

Batch plants shall be automated for weighing, recycling, and monitoring the system. In the case of a malfunction of the printing system, the requirements of Subsection 401.074 c. of this Specification will apply.

The batch plant shall accurately proportion the various materials in the proper order by weight. The entire batching and mixing cycle shall be continuous and shall not require any manual operations. The batch plant shall use auxiliary interlock circuits to trigger an audible alarm whenever an error exceeding the acceptable tolerance occurs. Along with the alarm, the printer shall print an asterisk on the delivery slip in the same row containing the out-of-tolerance weight. The automatic proportioning system shall be capable of consistently delivering material within the full range of batch sizes. When RAP is being used, the plant must be capable of automatically compensating for the moisture content of the RAP.

All plants shall be equipped with an approved digital recording device. The delivery slip load ticket shall contain information required under Subsection 108.1.3, Provisions Relating to Certain Measurements, Mass and Paragraphs a, b, and c of Subsection 401.073.

401.073 Automatic Ticket Printer System on Automatic HMA Plant

An approved automatic ticket printer system shall be used with all approved automatic HMA plants. The requirements for delivery slips for payment of materials measured by weight, as given in the following Subsections, shall be waived: 108.1.3 a., 108.1.3 b., 108.1.3 c., and 108.1.3 d. The automatic printed ticket will be considered as the Weight Certificate.

The requirements of Subsection 108.1.3 f., Delivery Slips, shall be met by the weigh slip or ticket, printed by the automatic system, which accompanies each truckload, except for the following changes:

a. The quantity information required shall be individual weights of each batch or total net weight of each truckload.
b. Signatures (legible initials acceptable) of Weighmaster (required only in the event of a malfunction as described in 401.074 c.).
c. The MaineDOT designation for the JMF.

401.074 Weight Checks on Automatic HMA Plant

At least twice during each five days of production either of the following checks will be performed:

a. A loaded truck may be intercepted and weighed on a platform scale that has been sealed by the State Sealer of Weights and Measures within the past 12 months. The inspector will notify the producer to take corrective action on any discrepancy over 1.0%. The producer may continue to operate for 48-hours under the following conditions:

    1. If the discrepancy does not exceed 1.5%; payment will still be governed by the printed ticket.
    2. If the discrepancy exceeds 1.5%, the plant will be allowed to operate as long as payment is determined by truck platform scale net weight.

If after 48-hours the discrepancy has not been addressed, and reduced below 1.0%, then plant operations will cease. Plant operation may resume after the discrepancy has been brought within 1.0%.

b. Where platform scales are not readily available, a check will be made to verify the accuracy and sensitivity of each scale within the normal weighing range and to assure that the interlocking devices and automatic printer system are functioning properly.

c. In the event of a malfunction of the automatic printer system, production may be continued without the use of platform truck scales for a period not to exceed the next two working days, providing total weights of each batch are recorded on weight tickets and certified by a Licensed Public Weighmaster.

401.08 Hauling Equipment Trucks for hauling Hot Mix Asphalt

Trucks for hauling Hot Mix Asphalt Pavement shall have tight, clean, and smooth metal dump bodies, which have been thinly coated with a small amount of approved release agent to prevent the mixture from adhering to the bodies. Solvents based agents developed to strip asphalts from aggregates will not be allowed as release agents.

All truck dump bodies shall have a cover of canvas or other water repellent material capable of heat retention, which completely covers the mixture. The cover shall be securely fastened on the truck, unless unloading.

All truck bodies shall have an opening on both sides which will accommodate a thermometer stem. The opening shall be located near the midpoint of the body, at least 12 inches above the bed.

401.09 Pavers

Pavers shall be self-contained, self-propelled units with an activated screed (heated if necessary) capable of placing courses of Hot Mix Asphalt Pavement in full lane widths specified in the Contract on the mainline, shoulder or similar construction.

On projects with no price adjustment for smoothness, pavers shall be of sufficient class and size to place Hot Mix Asphalt Pavement over the full width of the mainline travel way with a 10 feet minimum main screed with activated extensions.

The Contractor shall place Hot Mix Asphalt Pavement on the mainline with a paver using an automatic grade and slope controlled screed, unless otherwise authorized by the Authority. The controls shall automatically adjust the screed and increase or decrease the layer thickness to compensate for irregularities in the preceding course. The controls shall maintain the proper transverse slope and be readily adjustable so that transitions and superelevated curves can be properly paved. The controls shall operate from a fixed or moving reference such as a grade wire or ski type device (floating beam) with a minimum length of 30 feet, a non-contact grade

control with a minimum span of 24 feet, except that a 40 feet reference shall be used on mainline projects.

The Contractor shall operate the paver in such a manner as to produce a visually uniform surface texture and a thickness within the requirements of Subsection 401.101, Surface Tolerances. The paver shall have a receiving hopper with sufficient capacity for a uniform spreading operation and a distribution system to place the mixture uniformly, without segregation in front of the screed. The screed assembly shall produce a finished surface of the required evenness and texture without tearing, shoving, or gouging the mixture. Pavers with extendible screeds shall have auger extensions and tunnel extenders as per the manufacturer's recommendations, a copy of which shall be available if requested.

The Contractor shall have the paver at the Project site sufficiently before the start of paving operations to be inspected and approved by the Authority. The Contractor shall repair or replace any paver found worn or defective, either before or during placement, to the satisfaction of the Authority. Pavers that produce an unevenly textured or non-uniform mat will be repaired or replaced before continuing to place HMA on MTA projects. On a daily basis, the Contractor shall perform nuclear density testing across the mat being placed, at 300 mm [12 in] intervals. If the values vary by more than 2.0 percent from the mean, the Contractor shall make adjustments until the inconsistencies are remedied.

Failure to replace or repair defective placement equipment may result in a letter of suspension of work and notification of a quality control violation resulting in possible monetary penalties as governed by Section 106, Quality.

401.10 Rollers

Rollers shall be static steel, pneumatic tire, oscillatory, or approved vibrator type. Rollers shall be in good mechanical condition, capable of starting and stopping smoothly, and be free from backlash when reversing direction. Rollers shall be equipped and operated in such a way as to prevent the picking-up of hot mixed material by the roller surface. The use of rollers, which result in crushing of the aggregate or in displacement of the HMA will not be permitted. Any Hot Mix Asphalt Pavement that becomes loose, broken, contaminated, shows an excess or deficiency of Performance Graded Asphalt Binder, or is in any other way defective shall be removed and replaced at no additional cost to the Authority with fresh Hot Mix Asphalt Pavement, which shall be immediately compacted to conform to the adjacent area.

The Contractor shall repair or replace any roller found to be worn or defective, either before or during placement, to the satisfaction of the Authority. Rollers that produce grooved, unevenly textured or non-uniform mat will be repaired or replaced before continuing to place HMA on MTA projects.

The type of rollers to be used and their relative position in the compaction sequence shall generally be at the Contractor's option, provided Specification densities are attained and with the following requirements:

a. On variable-depth courses, the first lift of pavement over gravel, reclaimed pavement, an irregular or milled surfaces, or on bridges, at least one roller shall be a 16 ton pneumatic-tired. Unless otherwise allowed by the Resident, pneumatic-tired rollers shall be equipped with skirting to minimize the pickup of HMA materials from the paved surface. When required by the Resident, the roller shall be ballasted to 20 ton.

b. Compaction with a vibratory or steel wheel roller shall precede pneumatic-tired rolling, unless otherwise authorized by the Authority.

c. Vibratory rollers shall not be operated in the vibratory mode when checking or cracking of the mat occurs, or on bridge decks.

d. Any method, which results in cracking or checking of the mat, will be discontinued and corrective action taken.

e. The use of an oscillating steel roller shall be required to compact all mixtures placed on bridge decks.

The maximum operating speed for a steel wheel or pneumatic roller shall not exceed the manufacturer's recommendations, a copy of which shall be available if requested.

401.101 Surface Tolerances

The Authority will check surface tolerance utilizing the following methods:

a. A 16 foot straightedge or string line placed directly on the surface, parallel to the centerline of pavement.
b. A 10 foot straightedge or string line placed directly on the surface, transverse to the centerline of pavement.

The Contractor shall correct variations exceeding 6 mm [1/4 in] by removing defective work and replacing it with new material as directed by the Authority. The Contractor shall furnish a 10 foot straightedge for the Authority's use.

401.11 Preparation of Existing Surface

The Contractor shall thoroughly clean the surface upon which Hot Mix Asphalt Pavement is to be placed of all objectionable material. When the surface of the existing base or pavement is irregular, the Contractor shall bring it to uniform grade and cross section. All surfaces shall have a tack coat applied prior to placing any new HMA course. Tack coat shall conform to the requirements of Section 409, Bituminous Tack Coat, Section 702, Bituminous Material, and all applicable sections of the Contract.

401.12 Hot Mix Asphalt Documentation

The Contractor and the Authority shall agree on the amount of Hot Mix Asphalt Pavement that has been placed each day. All delivery slips shall conform to the requirements of Subsection 401.073.

401.13 Preparation of Aggregates

The Contractor shall dry and heat the aggregates for the HMA to the required temperature. The Contractor shall properly adjust flames to avoid physical damage to the aggregate and to avoid depositing soot on the aggregate.

401.14 Mixing

The Contractor shall combine the dried aggregate in the mixer in the amount of each fraction of aggregate required to meet the JMF. The Contractor shall measure the amount of PGAB and introduce it into the mixer in the amount specified by the JMF.

The Contractor shall produce the HMA at the temperature established by the JMF.

The Contractor shall dry the aggregate sufficiently so that the HMA will not flush, foam excessively, or displace excessively under the action of the rollers. The Contractor shall introduce the aggregate into the mixer at a temperature of not more than 25°F above the temperature at which the viscosity of the PGAB being used is 0.150 Pa·s (Pascal-second).

The Contractor shall store and introduce into the mixer the Performance Graded Asphalt Binder at a uniformly maintained temperature at which the viscosity of the PGAB is between 0.150 Pa·s and 0.300 Pa·s. The aggregate shall be coated completely and uniformly with a thorough distribution of the PGAB. The Contractor shall determine the wet mixing time for each plant and for each type of aggregate used.

401.15 Spreading and Finishing

On areas where irregularities or unavoidable obstacles make the use of mechanical spreading and finishing equipment impracticable, the Contractor shall spread, rake, and lute the HMA with hand tools to provide the required compacted thickness. Solvent based agents developed to strip asphalts from aggregates will not be allowed as release agents.

On roads opened to two-way traffic, the Contractor shall place each course over the full width of the traveled way section being paved that day, unless otherwise noted by the Authority in Section 403, Hot Mix Asphalt Pavement.

In addition, Hot Mix Asphalt pavement placed on bridges shall also conform to Subsection 508.04 and the following requirements:

a. The bottom course shall be placed with an approved rubber mounted paver of such type and operated in such a manner that the membrane waterproofing will not be damaged in any way.

b. The top course shall not be placed until the bottom course has cooled sufficiently to provide stability.

c. The Contractor will not be required to cut sample cores from the compacted pavement on the bridge deck, unless otherwise directed by Special Provisions.

d. After the top course has been placed, the shoulder areas shall be sealed three feet wide with two applications of an emulsified bituminous sealer meeting the requirements of Subsection 612.03, Sealing, and Subsection 702.12, Emulsified Bituminous Sealing Compound. The first application shall be pre-mixed with fine, sharp sand, similar to mortar sand, as needed to fill all voids in the mix in the area being sealed. The second application may be applied without sand. The sealer shall be carried to the curb at the gutter line in sufficient quantity to leave a bead or fillet of material at the face of curb. The area to be sealed shall be clean, dry and the surface shall be at ambient temperature.

e. The furnishing and applying of the required quantity of sealer for the bridge shoulder areas shall be incidental to placing the hot mix asphalt pavement.

f. The atmospheric temperature for all courses placed on bridge decks shall be 50°F or higher.

401.16 Compaction

Immediately after the Hot Mix Asphalt Pavement has been spread, struck-off, and any surface irregularities adjusted, the Contractor shall thoroughly and uniformly compact the HMA by rolling.

The Contractor shall roll the surface when the mixture is in the proper condition and when the rolling does not cause undue displacement, cracking, or shoving. The Contractor shall prevent adhesion of the HMA to the rollers or vibrating compactors without the use of fuel oil or other petroleum based release agents. Solvents designed to strip asphalt binders from aggregates will not be permitted as release agents on equipment, tools, or pavement surfaces.

The Contractor shall immediately correct any displacement occurring as a result of the reversing of the direction of a roller or from other causes to the satisfaction of the Authority. Any operation other than placement of variable depth shim course that results in breakdown of the aggregate shall be discontinued. Any new pavement that shows obvious cracking, checking, or displacement shall be removed and replaced for the full lane width as directed by the Resident at no cost to the Authority.

Along forms, curbs, headers, walls, and other places not accessible to the rollers, the Contractor shall thoroughly compact the HMA with mechanical vibrating compactors. The Contractor shall only use hand tamping in areas inaccessible to all other compaction equipment.

On depressed areas, the Contractor may use a trench roller or cleated compression strips under a roller to transmit compression to the depressed area.

Any HMA that becomes unacceptable due to cooling, cracking, checking, segregation or deformation as a result of an interruption in mix delivery shall be removed and replaced, with material that meets Contract Specifications at no cost to the Authority.

401.162 Voids

The HMA will be accepted for percent air voids on a sublot basis. Percent air voids will be determined in accordance with AASHTO T 312. Point of sampling will be from the truck at the plant. A sublot will consist of 500 tons. The number of samples per day will be computed as one for every 500 tons plus one for any additional fractional sublot that is equal to or greater than 100 tons or as directed by the Resident. There shall be a minimum of one sublot per day per JMF. One sample shall be taken and tested for each 500 tons of production or portions thereof. Full payment will be made for each 500 tons of production that meets the specified void range of 2.5 to 5.5 percent.

Payment reduction will be applied to each sublot (500 tons) that falls outside of this range. See Subsection 401.21.

401.163 PGAB Content

The HMA will be accepted for PGAB content on a sublot basis. PGAB content will be determined in accordance with AASHTO T 308. Point of sampling will be from the truck at the plant. A sublot will consist of 500 tons. The number of samples per day will be computed as one for every 500 tons plus one for any additional fractional sublot that is equal to or greater than 100 tons or as directed by the Resident. There shall be a minimum of one sublot per day per JMF.

Payment reduction will be applied to each sublot (500 tons) that falls outside the allowable limits. Note minimum asphalt content specified in Special Provision Section 403. See Subsection 401.21.

401.164 Density

Pavement density will be determined by comparing the density of six inch diameter full depth cores (for the course being laid) taken from the compacted pavement to the Theoretical Maximum Density of that core. Core locations shall be by random samples in conformance with ASTM-D979 & D3665. The Contractor shall supply a masonry saw with a 12 inch deep diamond wet cutting saw blade capable of cutting the six inch diameter cores.

For determination of pavement density, core samples six inches in diameter, for the full depth of the course being laid, shall be taken by the Contractor from the mixture incorporated in the work after finishing operations have been completed and the pavement has cooled to 70°F. Ice or dry ice shall be used to reduce temperature as necessary.

Vertical surface of the core area shall be coated with rubberized joint sealer prior to refilling with bituminous mixture. Cores will not be cut for shim pavement.

The joint sealer, bituminous mixture and the labor for obtaining these samples in the field and restoring the surface shall be furnished without charge by the Contractor. The joint sealant shall conform to Federal Specification SS-S-1401C and shall be incidental to the pavement items. Care must be exercised to avoid excess joint material on top of the finish mat and at the bottom of the joint.

No additional course shall be constructed on a course until the density of the sample has been established and approved.

The densities of the completed pavement shall be 92.5 to 97.0 percent of the theoretical maximum density obtained.

The pavement will be accepted for density on a sublot basis. A sublot will consist of 500 tons. The number of cores per day will be computed as one for every 500 tons plus one for any portion that does not equal 500 tons or as directed by the Resident. There shall be a minimum of one sublot per day per JMF.

Each sublot will be evaluated separately and full or partial payment will be made based on the results of tests performed on the cores.

Payment reduction will be applied to each core that has a density outside of the allowable range (92.5 to 97.0). See Subsection 401.21.

401.17 Joints

The Contractor shall construct wearing course transverse and longitudinal joints in such a manner that minimum tolerances shown in Subsection 401.101, Surface Tolerances, are met when measured with a straightedge.

The paver shall always maintain a uniform head of HMA during the joint construction.

The HMA shall be free of segregation and meet temperature requirements outlined in Subsection 401.04. Transverse joints of the wearing course shall be straight and neatly trimmed. The Contractor may form a vertical face exposing the full depth of the course by inserting a header, by breaking the bond with the underlying course, or by cutting back with hand tools. The Authority may allow feathered or "lap" joints on lower base courses or when matching existing base type pavements.

Longitudinal joints shall be generally straight to the line of travel, and constructed in a manner that will best ensure joint integrity. Methods or activities that prove detrimental to the construction of straight, sound longitudinal joints will be discontinued.

Extra care shall be taken to insure satisfactory vertical joints in the pavements. The Contractor shall apply a coating of joint sealant immediately before paving all cold joints (temperatures less than 120°F) to the vertical face of the wearing surface unless otherwise directed by the Resident. A heavy application of tack coat shall be applied to the vertical face of all cold joints on lower lifts. The Contractor shall use an approved spray apparatus designed for covering a narrow surface. The Authority may approve application by a brush for small surfaces, or in the event of a malfunction of the spray apparatus, but for a period of not more than one working day. Joint sealer shall conform to Federal Specification SS-S-1401C. The Contractor shall submit to the Resident a manufacturer's certification for the joint sealant (SS-S-1401C).

Where pavement under this Contract joins an existing pavement or when the Authority directs, the Contractor shall cut the existing pavement along a smooth line, producing a neat, even, vertical joint. The Authority will not permit broken or raveled edges. The cost of all work necessary for the preparation of joints is incidental to related Contract pay items.

401.18 Quality Control

The Contractor shall submit for approval and operate in accordance with the approved Quality Control Plan (QCP) to assure a product meeting the Contract requirements. The QCP shall meet the requirements of Subsection 106.4, Quality Control, and this Section. The Contractor shall not begin paving operations until the Authority approves the QCP in writing. Prior to placing any mix, the Authority and the Contractor shall hold a pre-paving conference to discuss the paving schedule, source of mix, type and amount of equipment to be used, sequence of paving pattern, rate of mix supply, random sampling, project lots and sublots and traffic control.

A copy of the QC random numbers to be used on the Project shall be provided to the Resident. The Authority's random numbers for Acceptance testing shall be generated and on file with the Resident and the Project Manager. All personnel of the Authority and the Contractor who have significant information relevant to the paving items shall attend, including the responsible onsite paving supervisor for the Contractor. The Resident will prepare minutes of the conference and distribute them to all attendees. Any requests to revise the minutes must be made to the Resident within seven days of receipt. These minutes will constitute the final record of the pre-paving conference.

The QCP shall address any items that affect the quality of the Hot Mix Asphalt Pavement including, but not limited to, the following:

a. JMF(s).
b. Hot mix asphalt plant details.
c. Stockpile Management (to include provisions for a minimum 2 day stockpile).
d. Make and type of paver(s).
e. Make and type of rollers including weight, weight per inch of steel wheels, and average contact pressure for pneumatic tired rollers.
f. Name of QCP Administrator, and certification number.

g. Name of Process Control Technician(s) and certification number(s).
h. Name of Quality Control Technician(s) and certification number(s).
i. Mixing and transportation including process for ensuring that truck bodies are clean and free of debris or contamination that could adversely affect the finished pavement.
j. Testing plan.
k. Laydown operations including longitudinal joint construction, procedures for avoiding paving in inclement weather, type of release agent to be used on trucks tools and rollers, compaction of shoulders, tacking of all joints, methods to ensure that segregation is minimized, procedures to determine the maximum rolling and paving speeds based on best engineering practices as well as past experience in achieving the best possible smoothness of the pavement. Solvent based agents developed to strip asphalts from aggregates will not be allowed as release agents.
l. Examples of Quality Control forms including a daily plant report, daily paving report and delivery slip template for any plant to be utilized.
m. Silo management and details (can show storage for use on project of up to 36-hours).
n. Provisions for varying mix temperature due to extraordinary conditions or production limitations. If a warm-mix technology is utilized, a proposed target production range (not to exceed 50 F) will be provided for each mix design.
o. Name and responsibilities of the Responsible onsite Paving Supervisor.
p. Method for calibration/verification of Density Gauge.
q. A note that all testing will be done in accordance with AASHTO and the Maine DOT Policies and Procedures for HMA Sampling and Testing.
r. A detailed description of RAP processing, stockpiling and introduction into the plant as well as a note detailing conditions under which the percent of RAP will vary from that specified on the JMF.
s. A detailed procedure outlining when production will be halted due to QC or Acceptance testing results.
t. A plan to address the change in PGAB source or supplier and the potential co-mingling of differing PGAB's.
u. Provisions for how the QCP will be communicated to the Contractor's field personnel.

The QCP shall include the following technicians together with following minimum requirements:

a. QCP Administrator – A qualified individual shall administer the QCP. The QCP Administrator must be a full-time employee of or a consultant engaged by the Contractor or paving subcontractor. The QCP Administrator shall have full Authority to institute any and all actions necessary for the successful operation of the QCP. The QCP Administrator (or its designee in the QCP Administrator's absence) shall be available to communicate with the Authority at all times. The QCP Administrator shall be certified as a Quality Assurance Technologist certified by the New England Transportation Technician Certification Program (NETTCP).
b. Process Control Technician(s) (PCT) shall utilize test results and other quality control practices to assure the quality of aggregates and other mix components and control proportioning to meet the JMF(s). The PCT shall inspect all equipment used in mixing to assure it is operating properly and that mixing conforms to the

mix design(s) and other Contract requirements, and that delivery slips and plant recordation accurately reflects the mix being produced with all required information. The QCP shall detail how these duties and responsibilities are to be accomplished and documented, and whether more than one PCT is required. The Plan shall include the criteria to be utilized by the PCT to correct or reject unsatisfactory materials. The PCT shall be certified as a Plant Technician by the NETTCP.

c. Quality Control Technician(s) (QCT) shall perform and utilize quality control tests at the jobsite to assure that delivered materials meet the requirements of the JMF(s). The QCT shall inspect all equipment utilized in transporting, laydown, and compacting to assure it is operating property and that all laydown and compaction conform to the Contract requirements. The QCP shall detail how these duties and responsibilities are to be accomplished and documented, and whether more than one QCT is required. The QCP shall include the criteria utilized by the QCT to correct or reject unsatisfactory materials. The QCT shall be certified as a Paving Inspector by the NETTCP.

The QCP shall detail the coordination of the activities of the Plan Administrator, the PCT and the QCT. The Project Superintendent shall be named the QCP, and the responsibilities for successful implementation of the QCP shall be outlined.

401.191 Inspection/Testing

All quality control testing at the plant and paving site for bituminous concrete paving shall be provided by the Contractor and will be incidental to the various items of the Contract. Quality control testing to verify the job mix formula at the plant shall be comprised of a sample taken and tested for each 500 tons of production. The plant will be shut down for two consecutive out of Specification test results for VMA, VFB, Fbe, PGAB content, gradation, and/or voids. Prior to resuming paving operations, the plant quality control unit shall satisfy the Authority that the plant production is in compliance with the Specifications. The plant, at no additional cost to the Authority, shall assign qualified quality control staff personnel and have an on-site laboratory equipped to perform all tests.

The Contractor shall submit a list of on-site laboratory and sampling facilities, including available equipment.

Adequate and convenient sampling facilities shall be provided, allowing the Resident and the Authority's designated quality assurance personnel to obtain representative samples from the full width and depth of the discharge area of each aggregate bin. The sampling tray shall be structurally supported during the sampling operation. Access to the sampling facilities shall be provided. The use of such access shall not be more difficult than climbing a ladder leading to a secure platform with railings.

Final acceptance shall be based on quality assurance tests to assure compliance with the job mix formula as established. Samples and certified quality control reports shall be available to the Resident and the Authority's designated quality assurance personnel as often as requested.

Sample locations will be random in compliance with ASTM D3665 or as directed by the Resident.

When plant inspection is maintained, the material will be considered acceptable for use when the specified tests from samples obtained at the production plant indicate conformance to the approved job mix formula.

Quality assurance testing services for bituminous concrete pavement shall be provided by the Authority. The Contractor shall provide adequate space and all lab equipment, materials and chemicals at the bituminous plant necessary to verify job mix formula (asphalt content (AASHTO T 164 or T 308) and gradations). Upon completion, the Contractor shall be responsible for the proper disposal of all materials and chemicals. This work will not be measured separately for payment, but shall be incidental to the various items of the Contract.

A. Inspection. The Resident, or his authorized representative, shall have access and use of the laboratory facilities at any time and access to all parts of the plant for:

1. Inspection of the condition and operations of the plant.
2. Confirmation of the adequacy of equipment in use.
3. Verification of the character and proportions of the mixture.
4. Determination of temperatures being maintained in the preparation of the mixtures.
5. Inspection of incidental related procedures.
6. Performing quality assurance testing.

B. Plant Testing Laboratory. The Contractor shall provide a plant testing laboratory for use by the Authority's quality assurance personnel for acceptance testing functions.

The plant laboratory shall be available at the following times for use by the Authority's quality assurance personnel:

1. During periods of pavement production;
2. During periods of sampling and testing; and,
3. Whenever materials subject to the provisions of these Specifications are being supplied or tested.

The Authority's quality assurance personnel will always have priority in use of the laboratory. The laboratory shall have sufficient equipment in order for both (Authority’s and Contractor’s) testing representatives to operate efficiently.

The plant testing laboratory shall have a floor space area of not less than 150 square feet, with a ceiling height of not less than 7-1/2 feet. The laboratory shall be weather tight, sufficiently heated in cold weather and air-conditioned in hot weather, to maintain temperatures for testing purposes of 70°F ± 5°F.

As a minimum the plant testing laboratory shall have:

1. Adequate artificial lighting.

2. Electrical outlets sufficient in number and capacity for operating the required testing equipment and drying samples.

3. Two fire extinguishers, Underwriter's Laboratory approved.

4. Work benches for testing, minimum 2-1/2 feet by 10 feet.

5. Desk with two chairs.

6. Sanitary facilities convenient to testing laboratory.

7. Exhaust fan to outside air, minimum 12 inch blade diameter.

8. A direct telephone line and telephone including answering machine and FAX machine, operating 24-hours per day, seven days a week.

9. File cabinet with lock for Resident.

10. Sink with running water, attached drain board and drain.

11. Metal stand for holding washing sieves.

12. A Two element hot plate or other comparable heating device, with dial type thermostatic controls for drying aggregates.

13. Mechanical shaker and appropriate sieves (listed in 639.06) meeting the requirements of ASTM E11.

14. Superpave gyratory compactor.

15. Oven, thermostatically controlled, inside minimum one cubic foot.

16. Two volumetric specific gravity flasks, 500 CC.

17. Other necessary hand tools required for sampling and testing.

18. Library containing Contract Specification, latest ASTM Volumes 4.03 and 4.04, AASHTO Materials Parts I and II, and Asphalt Institute Publications MS-2 and SS-1.

19. Equipment for Maximum Theoretical Density meeting the requirements of AASHTO T209 and equipment for Bulk Spec. Gravity meeting the requirements of AASHTO T166.

20. Infra-red temperature measuring device for use at both plant and Project site.

21. Necessary equipment for extraction (wet sample) testing.

22. Diamond blade saw for trimming pavement cores.

23. Two ovens.

24. All equipment (scales, Superpave gyratory compactor, etc.) to have current calibrations and certifications.

Approval of the plant and testing laboratory by the Resident requires all the above facilities and equipment to be in good working order during pavement production, sampling and testing. Failure to provide any of the above shall be sufficient cause for disapproving the bituminous plant operations.

401.21 Method of Measurement

The Authority will measure Hot Mix Asphalt Pavement by the ton in accordance with Subsection 108.1, Measurement of Quantities for Payment.

This Subsection is amended by the following:

A reduction in payment will occur when the voids, asphalt content, and density are other than the limits specified below for 100 percent payment. The payment reduction for voids and PGAB content and density will be based upon each sublot (500 tons) of production as specified in Subsections 401.162, 401.163 and 401.164. The Contractor may request one retest for each failing sublot for core density only. The original core density and the recut core density shall be averaged together to determine payment for the sublot. No retest will be allowed for voids or asphalt content. The Contractor shall pay $100.00 for each additional core tested. Pavement restoration will not be measured separately for payment, but shall be incidental to the respective pay item.

Any lot resulting in zero payment shall be removed, disposed of and replaced at no additional cost to the Authority. Replacement pavement will be paid for based on the accepted and payment criteria specified herein.

CORE DENSITY VS. CORE THEORETICAL MAXIMUM DENSITY COMPACTION (SURFACE) 92.5-97 PERCENT	
PERCENT COMPACTION	**PERCENT PAYMENT**
92.5 - 97.0	100
91.5 - 92.4, 97.1 - 97.9	95
90.5 - 91.4, 98.0 - 98.9	90
89.5 - 90.4, 99.0 - 99.9	75
<89.5, > 99.9	0
Note: Percent compaction is the percentage of the field core density as compared to the Theoretical Maximum Density (TMD) of that core.	

*AIR VOIDS – 2.5 – 5.5 PERCENT	
VOIDS	**PAYMENT PERCENT**
2.5 to 5.5	100
2.0 - 2.4, 5.6 - 6.1	95
1.5 – 1.9, 6.2 – 6.6	90
1.0 - 1.4, 6.7-7.1	75
<1.0, >7.1	0
Note: Voids are based on the average of the test specimens fabricated at the plant for each sublot (500 tons). *Air voids payment does not apply for ARGG, but does for shut down criteria	

Payment for PGAB content shall be based on the JMF aim with an allowable production tolerance of 0.4 percent except that test results which fall outside of the following ranges shall not be permitted:

9.5 mm	5.7 – 7.5
12.5 mm	5.2 – 6.4
12.5mm(ARGG)	7.6 min.
19.0 mm	4.7 – 6.1

9.5 mm PGAB CONTENT	
% PGAB	% PAYMENT
JMF Aim ± 0.4	100
JMF Aim + 0.5 , - 0.5 , < 5.7	95
JMF Aim + 0.6 , - 0.6 , < 5.6	85
JMF Aim + 0.7 , - 0.7 , < 5.5	75
JMF Aim + 0.8 , - 0.8 , ≦ 5.4, > 7.5	50
Note: PGAB content is based on samples tested at the plant for each 500 Ton sublot	

12.5 mm PGAB CONTENT	
% PGAB	% PAYMENT
JMF Aim ± 0.4	100
JMF Aim + 0.5 , - 0.5 , < 5.1	95
JMF Aim + 0.6 , - 0.6 , < 5.0	85
JMF Aim + 0.7 , - 0.7 , < 4.9	75
JMF Aim + 0.8 , - 0.8 , ≦ 4.8, > 6.4	50
Note: PGAB content is based on samples tested at the plant for each 500 Ton sublot	

12.5 mm PGAB CONTENT(ARGG)	
% PGAB	% PAYMENT
JMF Aim ± 0.4	100
JMF Aim + 0.5 , - 0.5	95
JMF Aim + 0.6 , - 0.6	85
JMF Aim + 0.7 , - 0.7	75
JMF Aim + 0.8 , - 0.8	50
Note: PGAB content is based on samples tested at the plant for each 500 Ton sublot	

19.0 mm PGAB CONTENT	
% PGAB	% PAYMENT
JMF Aim ± 0.4	100
JMF Aim + 0.5 , - 0.5 , < 4.6	95
JMF Aim + 0.6 , - 0.6 , < 4.5	85
JMF Aim + 0.7 , - 0.7 , < 4.4	75
JMF Aim + 0.8 , - 0.8 , ≦ 4.3, > 6.1	50
Note: PGAB content is based on samples tested at the plant for each 500 Ton sublot	

As an example of payment reduction, if a sublot of 500 tons was tested and found to have 96 percent TMD compaction, 5.8 percent air voids and asphalt content of 5.58 percent, the payment reduction would be as follows:

500 tons x 1.00	= 500 tons payment	=	0 tons reduction (compaction)
500 tons x 0.95	= 475 tons payment	=	25 tons reduction (voids)
500 tons x 0.95	= 475 tons payment	=	25 tons reduction (asphalt content)

Payment = 500 tons - (0 + 25 + 25) = 450 tons

401.22 Basis of Payment

The Authority will pay for the work, in place and accepted, in accordance with the applicable sections of this Section, for each type of HMA specified.

The Authority will pay for the work specified in Subsection 401.11, for the HMA used, except that cleaning objectionable material from the pavement and furnishing and applying bituminous material to joints and contact surfaces is incidental.

Payment for this work under the appropriate pay items shall be full compensation for all labor, equipment, materials, and incidentals necessary to meet all related Contract requirements, including design of the JMF, implementation of the QCP, obtaining core samples, transporting cores and samples, filling core holes, applying specified material to joints, and providing testing facilities and equipment.

SPECIAL PROVISION

SECTION 403

HOT BITUMINOUS PAVEMENT

Desc. of Course	Grad. Design	Item Number	Bit Cont. % of Mix	Total Thick	No. Of Layers	Comp. Notes
			Mainline Mill and Fill			
Wearing	12.5 mm	403.2083	5.2 min. to 6.4	1-1/2 in.	1	A, B, C, D, E F, & G
Shim	4.75 mm	403.211	5.7 min to 7.50	1/2 in.	1	A, B, C, D, E, & F
			Cash Lane Mill and Fill			
Wearing	12.5 mm	403.208	5.2 min. to 6.4	1-1/2 in.	1	A, B, C, D, E & F
Shim	4.75 mm	403.211	5.7 min to 7.50	1/2 in.	1	A, B, C, D, E, & F
			Mainline Full Depth Construction			
Wearing	12.5 mm	403.2083	5.2 min. to 6.4	1-1/2 in.	1	A, B, C, D, E F, & G
Binder	12.5 mm	403.213	5.2 min. to 6.4	1-1/2 in.	1	A, B, C, D, E & F
Base	19 mm	403.207	4.7 min to 6.10	7 in.	3	A, B, C, D, E & F
			Mainline Full Depth Construction – Hand Placed Paid as Item 403.209 including but not limited to drainage trenches, parking areas and median barrier hand placed areas			
Wearing	9.5 mm	403.209	5.2 min. to 6.4	1 to 1-1/2 in.	1	A, B, C, D, E & F
Binder	12.5 mm	403.209	5.2 min. to 6.4	1-1/2 in.	1	A, B, C, D, E & F
Base	19 mm	403.209	4.7 min to 6.10	7 in.	3	A, B, C, D, E & F

COMPLEMENTARY NOTES

A. The required PGAB for Items 403.2083 will meet a **PG 64E-28** grading. Refer to provisions of 403.02 – General for HMA, for additional testing and documentation requirements. The required minimum PGAB for Items 403.207, 403.208, 403.209, 403.211, and 403.213 shall be a **PG 64-28** grading.

B. A maximum of 15 percent RAP may be used in the Hot Mix Asphalt.

C. The MaineDOT will conduct the job mix verification. The aggregate qualities shall meet the design traffic level of 3 to < 10 million ESAL for mix placed under this Contract. The design, verification, Quality Control, and Acceptance tests for this mix will be performed at **75 gyrations**.

D. No vehicular traffic or loads shall be permitted on newly completed pavement until adequate stability has been attained and the material has cooled sufficiently to prevent distortion or loss of fines. The newly paved area may be opened to traffic after the internal temperature of the pavement has cooled to 120°F. The Resident will test the internal temperature of the pavement and shall be the sole judge as to the opening to traffic. The period of time before opening to traffic may be extended at the discretion of the Resident. The lane closure may not be removed until the internal temperature has cooled to 120°F.

E. Joints shall conform to Subsection 401.17.

F. Tack coat shall be applied to the pavement at a rate of 0.03G/SY prior to placing the surface course. Tack coat is required between all lifts of pavement, or as directed by the Resident.

G. Asphalt cement shall conform to the provisions of 403.02 – Polymer Modified PGAB for HMA.

SPECIAL PROVISION

SECTION 403

HOT BITUMINOUS PAVEMENT

(Hot Mix Asphalt, 12.5 mm (Polymer Modified))

403.01 Description

This work shall also consist of the construction, maintenance and removal of all temporary bituminous ramps at locations as shown on the Plans or as directed by the Resident.

403.02 General

The Contractor shall compose the Hot Mix Asphalt Pavement with aggregate, Performance Graded Asphalt Binder (PGAB), and mineral filler if required. The Performance Graded Asphalt Binder (PGAB) shall be polymer modified as detailed in this Special Provision and shall conform to the requirements of AASHTO M 320. The required PGAB shall be a storage-stable, preblended, homogeneous, polymer modified asphalt binder that meets PG 64E-28 grading requirements in AASHTO MP-19.

Polymer-Modified

The RTFOT (AASHTO T 240) residue of the polymer modified PGAB shall be tested by the Contractor according to ASTM D 6084 and have a minimum elastic recovery value of 60 percent at a test temperature of 25°C. The Contractor shall provide the Authority with documentation and test results from the asphalt binder provider showing that the polymer modified PGAB meets the requirements of this Special Provision. The base asphalt binder PGAB shall be unmodified and meet a **PG 58-28** to **PG 64-28** grading. The Authority may take an informational samples of the polymer modified PGAB at any time to evaluate its elastic recovery value.

403.03 Construction

All areas which have been milled or overlaid shall have a minimum 29 foot temporary ramp constructed at the milled or overlaid limits prior to opening the roadway to traffic. Temporary ramps shall be constructed using the same material as being placed on that day or as directed by the Resident. All temporary ramps are to be constructed on a sand joint. The Contractor shall be responsible for all repairs and maintenance required for the temporary ramps.

The Contractor shall be responsible for the layout of the longitudinal centerline between the travel lanes. The control points to establish this line will be furnished by the Authority.

The sand and loose debris adjacent to the median guardrail shall be removed and disposed of by the Contractor off of turnpike property.

403.04 Test Strip

A minimum test strip of 100 tons placed at a nominal depth of 1-1/2 inches, full lane width, shall be required. It shall be evaluated under testing requirements for mix volumetric and density. The exact location will be identified by the Authority. A fog coat of Item 409.15, Bituminous Tack Coat, shall be applied to the level course prior to the placement of the HMA surface course, payment to be made under the 409.15 Pay Item. The test strip will be excluded from the remainder of the projects' QA analysis. The Contractor shall notify the Authority at least 48-hours in advance of placing the test strip. The test strip is intended to allow the Contractor to establish a method of compaction and adjust plant settings prior to mainline plant production.

403.05 Method of Measurement

The construction and removal of temporary ramps on sand joints, and maintaining the ramps will not be measured separately for payment, but shall be incidental to Item 403.

The removal of sand and loose debris will not be measured separately for payment, but shall be incidental to paving items.

Hot Mix Asphalt, 12.5 mm (Polymer pavement with (up to) 15 percent RAP, placed as a wearing surface will be measured under Item 403.2083, Hot Mix Asphalt, 12.5 mm (Polymer Modified).

403.06 Basis of Payment

Hot Mix Asphalt, 12.5 mm (Polymer Modified) pavement with (up to) 15 percent RAP, placed as a wearing surface will be paid under Item 403.2083, Hot Mix Asphalt, 12.5 mm (Polymer Modified).

The following Pay Item is added:

Pay Item		Pay Unit
403.2083	Hot Mix Asphalt, 12.5 mm (Polymer Modified)	Ton

SPECIAL PROVISION

SECTION 409

BITUMINOUS TACK COAT

409.02 Bituminous Material

This Subsection is deleted in its entirety and replaced with the following:

Bituminous material shall conform to the Specifications for Emulsified Asphalt RS-1, of the AASHTO Designation M-140.

409.05 Equipment

Add "or as determined by the Resident", after the words "gal/yd^2]" in the fourth line of the second paragraph of this Subsection.

409.06 Preparation of Surface

The following paragraph is added:

All existing pavement and shoulder areas on which bituminous concrete mixtures are to be placed shall receive a tack coat. The surface area where the tack coat is to be applied shall be dry and cleaned of all dirt, sand, and loose material. Cleaning shall be accomplished by use of revolving brooms or mechanical sweepers. Undesirable material not removed by the above means shall be cleaned by hand-brooming or scraping, or a combination of both. Small areas otherwise inaccessible may be broomed with hand brooms. The tack coat shall be applied only when the existing surface is dry.

409.08 Method of Measurement

The following paragraphs are added:

Measurement will be based on delivery slips made out in duplicate by the Contractor and signed by the Resident, or his representative, at the point of delivery. One of these slips shall be retained by the Resident and one by the Contractor. Delivery slips shall be furnished by the Contractor and shall provide space for identifying the vehicle and driver, for stating the volume of material, the source of the material, the date, and the Resident or his representative's signature.

Material included in the delivery slips and not used or rejected shall be deducted from the amount being measured for payment. Each day's delivery slips shall be reconciled by the Contractor and the Resident within 24-hours.

Cleaning of the surface area where tack coat is to be applied shall be incidental to Item 409.15, Bituminous Tack Coat, Applied.

SPECIAL PROVISION

SECTION 419

SAWING AND SEALING JOINTS IN BITUMINOUS PAVEMENT

(Sawing Bituminous Pavement)

419.01 Description

This work consists of sawing bituminous concrete pavement as shown on the Plans, as specified herein or as approved by the Resident.

419.02 General

The bituminous concrete pavement to be sawed shall be accurately marked before cutting. The marking shall be in accordance with the locations as shown on the Plans or as approved by the Resident. Cutting shall be with an approved power driven saw with an abrasive blade.

Unless otherwise noted or directed, the sawcut shall be vertical, a minimum of 3/8 inch wide, and extend to the depth as shown on the Plans.

Residue or debris from the sawing operation shall be removed immediately and legally disposed of by the Contractor.

419.03 Method of Measurement

Sawing Bituminous Pavement will be measured by the linear foot of pavement actually cut and accepted. No additional payment will be made for variations in the pavement thickness.

419.04 Basis of Payment

Sawing Bituminous Pavement will be paid for at the Contract unit price per linear foot which shall be full compensation for all materials, tools, equipment, labor, and all incidentals necessary for the completion of the work to the satisfaction of the Resident. The disposal of sawcut residue shall be incidental to this item.

Payment will be made under:

Pay Item		Pay Unit
419.30	Sawing Bituminous Pavement	Linear Foot

SPECIAL PROVISION

SECTION 424

ASPHALT RUBBER FIBER CRACK SEALER

424.01 Description

This work shall consist of the furnishing and placement of crack sealing material in the longitudinal, transverse and random cracks of the all milled pavement areas as well as all existing pavement to be overlaid as shown on the Plans, as specified herein or as approved by the Resident.

Placement shall consist of:

1. Crack cleaning and drying
2. Material preparation and application
3. Material finishing and shaping.

424.02 Materials

Asphalt Rubber Crack Sealer shall be an asphalt and rubber compound designed especially for improving the strength and performance of the base asphalt cement. Hot pour rubber crack sealant material shall conform to ASTM D-3405.

Fiber reinforcing material shall be short-length polyester fibers having the following properties:

Tensile Strength; ASTM D2256-90	>70,000 psi
Elongation at Break; ASTM D2256-90	38%

The asphalt rubber fiber compound shall be mixed at a rate of 3 percent fiber weight to the weight of the asphalt cement.

424.03 Weather

Asphalt Rubber Crack Sealer shall not be applied on a wet surface or when the atmospheric temperature is below 45°F as determined by an approved thermometer (placed in the shade at the crack sealing location), or when weather conditions are otherwise unfavorable for proper construction procedures.

424.04 Equipment

Equipment used in the performance of the work shall be subject to the Resident's or authorized representative's approval and shall be maintained in a satisfactory working condition at all times.

(a) Air Compressor: Air compressors shall be portable and capable of furnishing not less than four yd^3 of air per minute at not less than 90 psi pressure at the nozzle. The compressor shall be equipped with traps that will maintain the compressed air free of oil and water.

(b) Sweeper: Manually operated, gas powered air-broom or self-propelled sweeper designed especially for use in cleaning pavements shall he used to remove debris, dirt, and dust from the cracks.

(c) Hot Air Lance: Should operate with propane and compressed air in combination at 2000°F - 3000°F, exit air heated at 310 m/s [1000 ft/s]. The lance should draw propane from no smaller than a 100 pound tank using separate hoses for propane and air draw. The hoses shall be wrapped together with reflectorized wrap to keep them together and to protect workers in low light situations.

(d) Hand Tools: Shall consist of V-shaped squeegee, brooms, shovels, metal bars with chisel shaped ends, and any other tools which may be satisfactorily used to accomplish this work. The joints shall be raked open.

(e) Melting Kettle: The unit used to melt the joint sealing compound shall be a double boiler, indirect fired type. The space between inner and outer shells shall he filled with a suitable heat transfer oil or substitute having a flash point of not less than 320°C [608°F]. The kettle shall be equipped with a satisfactory means of agitating and mixing the joint sealer with 90 percent fibers at all times. This may be accomplished by continuous stirring with mechanically operated paddles and/or a continuous circulating gear pump attached to the heating unit. The kettle must be equipped with thermostatic control calibrated between 200°F and 550°F.

424.05 Preparations of Cracks

All cracks greater than 1/4 inch shall be blown free and raked-off of loose material, dirt, vegetation, and other debris by high pressure air. Material removed from the crack shall be removed from the pavement surface by means of a power sweeper or appropriate hand tools as required. Cracks showing evidence of vegetation after being blown out shall be additionally cleaned by appropriate hand tools and additionally blown out. All cracks must be blown and heated via the hot air lance 10 minutes prior to the crack being sealed. Distance between the hot air lance and the crack sealing unit should be no more than 50 feet to eliminate reinvasion of water, debris, and other incompressibles. All debris, vegetation, and water shall be removed to enhance adhesion of the crack sealing material. This work shall not be done during inclement weather.

424.06 Preparation and Placement of Sealer

The rubber and fiber crack sealer material shall be heated and applied at the temperature specified by the manufacturer and approved by the Resident or authorized representative. Any material that has been heated above the manufacturer's specification shall not be used. Material that is reheated or held at temperature for an extended period of time may be used as allowed by

the manufacturer's specification and approval of the Resident or authorized representative. The Contractor shall provide the Resident or authorized representative with a suitable device for verifying the sealant temperature in the kettle and at the application site.

Any over application or spills are to be removed to the satisfaction of the Resident or authorized representative. Any sealed areas with damaged or contaminated sealer or visible voids are to be removed, prepared and resealed.

Sealer shall be delivered to the crack while the cracks are still hot from the hot air lance preparation through a pressure hose line and applicator shoe. The applicator shall be followed by a V-shaped squeegee to minimize any overband. The cracks are to be filled flush with the milled surface. Any loose material on the surface or in the crack, which may contaminate the crack sealer or impede bonding of the sealant to the pavement, is to be removed by hand tools prior to crack filling. No crack filling material shall be applied in a crack that is wet or where frost, snow, or ice is present.

424.07 Quality of Work

Excess of spilled sealer shall be removed from the pavement by approved methods and discarded. Any quality of work determined to be below normal acceptable standards will not be accepted and will be corrected and/or replaced as directed by the Resident or authorized representative at no additional cost to the Authority.

424.08 Method of Measurement

Asphalt Rubber Fiber Crack Sealer will be measured by the pound of sealant used. The manufacturer's weights of the sealant will be accepted as the basis for measurement.

424.09 Basis of Payment.

Asphalt Rubber Fiber Crack Sealer will be paid for at the Contract unit price per pound complete in place. This price shall be full compensation for furnishing and placing crack sealer, including cleaning and drying cracks; and furnishing all labor, materials, tools, equipment and incidentals necessary to complete the work.

Payment will be made under:

Pay Item		Pay Unit
424.323	Asphalt Rubber Fiber Crack Sealer - Applied	Pound

SPECIAL PROVISION

SECTION 459

BITUMINOUS CONCRETE WATERWAY

459.01 Description

This work shall consist of construction of bituminous concrete waterways and aprons at median catch basins in accordance with these Specifications and in close conformity with the lines and grades as shown on the Plans.

This work shall also include any additional grading with gravel borrow and loam to the median swale and/or longitudinal flow line, to match the bituminous concrete waterway to the limits and width as directed by the Resident. The top four inches of the grading shall be loam.

459.02 Materials

Materials shall meet the requirements specified in the following Subsections:

Bituminous concrete shall conform to Subsection 703.09, HMA Mixture Composition – Table 1 for Grading, Type 9.5 mm. The PGAB shall be PG 64-28.

Gravel borrow shall meet the requirements of Subsection 304.02, Aggregate Subbase Course – Gravel.

Loam shall meet the requirements of Subsection 615.02.

Seeding shall meet the requirements of Section 618 Seeding, Method Number 2.

459.03 General

The bituminous concrete waterways, including aprons, shall be constructed to the median catch basin as shown on the Plans or as directed by the Resident. The Resident may adjust the two inch swale depth to meet existing field conditions.

Excavation shall be to the required depth and width. The foundation shall be shaped and compacted to a firm even surface conforming to the section as shown on the Plans. All soft and yielding material shall be removed and replaced with acceptable material. Unless otherwise designated, the excavated walls shall be as nearly vertical as possible and the trench width no greater than necessary for the placement of the bituminous material.

The bituminous material shall be placed on the compacted base course in one course to provide the required depth when compacted. Hand tamping will be permitted for compaction. The bituminous material shall be uniformly compacted.

459.04 Method of Measurement

Bituminous Concrete Waterways will be measured by the unit installed, complete in place and accepted.

Erosion Control Blanket will not be paid for under this Item, but shall be paid for under Item 613.319.

Hot mix asphalt, gravel borrow, loam, seed and mulch will not be paid for separately, but shall be incidental to Item 459.061.

Hay bales will not be paid for under this Item, but shall be paid for under Item 656.50.

459.05 Basis of Payment

Bituminous Concrete Waterways will be paid for at the Contract unit price each, which price shall include all excavation, backfill, grading, bituminous material, gravel borrow, loam, seeding and all labor, equipment and materials required to complete the work.

Payment will be made under:

Pay Item		Pay Unit
459.061	Bituminous Concrete Waterway, Type II	Each

SPECIAL PROVISION

SECTION 470

BERM DROPOFF CORRECTION

(Grindings)

470.01 Description

This work shall consist of furnishing, placing and compacting bituminous grindings to eliminate the berm dropoff along the inside and outside shoulder edges at locations without guardrail on the shoulder edges.

470.02 Bituminous Materials

The grindings shall be reprocessed (crushed) to meet the following gradations:

Sieve Designation	Percentage by Weight Passing Square Mesh Sieve
¾”	100
½”	95-100
No. 4	50-80
No. 50	18-28
No. 200	3-10

470.03 Method of Construction

Work under this item shall be in accordance with the details as shown on the Plans or as directed by the Resident.

Berm dropoff correction materials shall be compacted with a walk behind roller or heavy plate compactor in areas without guardrail; and with a heavy plate compactor to the face of rail and posts, behind the rail and posts, and between posts in areas with guardrail. Areas not accessible with a heavy plate compactor shall be hand tamped.

470.04 Method of Measurement

Berm Dropoff Correction – Grindings, Non-Guardrail Areas Pavement grindings shall be measured by the ton, in place and compacted.

Material included in the delivery slips and not used or rejected shall be deducted from the amount being measured for payment.

470.05 Basis of Payment

The accepted quantity of "Berm Dropoff Correction – Grindings, Non-Guardrail Areas" will be paid for at the Contract unit price per ton, which price shall include all materials, crushing to gradation range, weighing, transportation, placement, compaction, labor, equipment, and all incidentals necessary to accomplish the work.

Payment will be made under:

Pay Item		Pay Unit
470.081	Berm Dropoff Correction – Grindings, Non-Guardrail Areas	Ton

SPECIAL PROVISION

SECTION 502

STRUCTURAL CONCRETE

This Subsection is deleted in its entirety and replaced with the following:

502.01 Description

This work shall consist of furnishing and placing Portland Cement Concrete for structures and incidental construction in accordance with these Specifications and in conformity with the lines, grades and dimensions shown on the Plans or established, or for placing concrete fill or underwater seals for foundations where called for on the Plans.

502.02 Classification

The Portland Cement Concrete shall be the class indicated on the Plans.

502.03 Materials

Materials shall meet the requirements specified in the following Subsections of Division 700, Materials:

Portland cement and Portland-pozzolan cement	701.01
Water	701.02
Air-Entraining Admixtures	701.03
Water Reducing Admixtures	701.04
High Range, Water Reducing, Admixture	701.0401
Set-retarding Admixtures	701.05
Curing Materials	701.06
Waterstops	701.07
Smoothed Surfaced Asphalt Roll Roofing (formerly heavy roofing felt)	701.08
Fly Ash	701.10
Calcium Nitrite Solution	701.11
Silica Fume	701.12
Ground Granulated Blast Furnace Slag	701.13
Fine Aggregate for Concrete	703.01
Coarse Aggregate for Concrete	703.02
Alkali Silica Reactive Aggregates	703.0201
Preformed Expansion Joint Filler	705.01
Bridge Drains	711.04
Non-Metallic Conduit	715.03
Anchor Bolts	720.07

In Subsection 701.10, Fly Ash, the "Loss on Ignition (LOI)" paragraph is deleted and replaced with the following:

Loss on Ignition (LOI) - Shall be 6.0 percent maximum per AASHTO T105 (ASTM C311) provided the Fly Ash has a documented history of not adversely effecting the concrete air content, otherwise the LOI shall be 3.0 percent maximum per AASHTO T105 (ASTM C311).

502.04 Shipping and Storage

Cement may be shipped in bags or in bulk from pre-tested and approved silos at the cement mill. The cement shall be completely protected from rain and moisture. Any cement damaged by moisture or which fails to meet any of the specified requirements shall be rejected and removed from the site. If requested by the Resident, cement stored for a period longer than 60 days shall be retested before being used in the work.

Bags of cement in shipment or storage shall not be piled more than eight (8) bags high. Bags of cement which for any reason have become partially set or which contain lumps of caked cement shall be rejected. Shipments of cement in bags shall be separately stored in a manner as to provide easy access for identification and inspection of each shipment.

Fly ash and slag shall be stored in weather tight silos approved by the Resident. All silos shall be completely empty and clean before material is deposited therein, unless the silo already contains material of the same type and properties.

Fly ash or slag remaining in bulk storage for a period greater than one (1) year after completion of tests will be resampled and retested by the supplier before shipment or use.

Handling, shipping and stockpiling of aggregates shall be done in such a way as to minimize segregation and breakage.

Fine aggregate and each size of coarse aggregate shall be stored in completely separate stockpiles on prepared bases constructed of the same material as that to be stockpiled, with a minimum thickness of 300 mm [1 foot]. The ground under the prepared bases shall be reasonably graded to drain away from the stockpile and shall be free of brush or other harmful vegetation. The base shall be left in place, undisturbed for the duration of the use of the stockpile. Prepared bases can be salvaged for reuse provided this material is reprocessed. Barge floors, wood, metal or other approved hard surfaces shall be considered acceptable alternates for the prepared bases described above.

502.041 Testing Equipment

The Contractor shall provide testing equipment and materials as specified below for use by the Resident or their representative exclusively. The equipment shall be available and acceptable to the Resident one (1) week prior to placing any concrete. All costs associated with providing and maintaining testing equipment shall be incidental to the work and no additional payment will be made.

The Resident will maintain the test equipment in reasonable condition. However, the Contractor shall replace any equipment that becomes unusable due to normal wear and tear or which is stolen or damaged from other than the Resident's neglect or mistreatment. All such replacement costs shall be incidental to the work and no additional payment will be made.

A. Pressure air meter meeting requirements of AASHTO T152 (Type B) and all accessory pay items required for use with the particular design of apparatus. This shall include one nine inch mason trowel, one metal scoop nine inches long *x* five inches wide, one tamping rod conforming to AASHTO T119, one rubber mallet as described in AASHTO T152, one strike off bar (flat straight bar of steel). The air meter shall be functional and shall bear a current calibration certificate issued by a recognized testing laboratory. Current shall mean within the calendar year.

B. Two pocket dial thermometers 0˚F to 200˚F, one inch diameter dial, five inch pointed stem, unbreakable poly carbonate crystal, stainless steel case, stem and bezel. Accuracy required is one percent over entire range.

C. "Contractors" rubber tired wheelbarrow.

D. Two D-handle square end shovels 9-1/2 inches wide.

E. Two pair heavy duty, long cuff, rubber gloves.

F. Miscellaneous equipment: 16 oz. plastic squeeze bottle, five gallon bucket, scrub brush, paper towels, folding rule, and rubber syringe.

G. Small rod – one tamping rod conforming to AASHTO T277.

H. Slump cone.

I. 10 foot straightedge as required by the Resident.

502.05 Composition and Proportioning

Concrete shall be composed of a homogenous mixture of Portland Cement, fly ash, or ground granulated blast furnace slag, fine aggregate, coarse aggregate, water and admixtures proportioned according to these Specifications and shall conform to the requirements of Table 1.

At least 45 days prior to placement of any concrete to be incorporated in the bridge or other concrete structure, the Contractor shall submit mix designs that meet the requirements of Table 1 along with the proposed sources of aggregates, cement, water and admixtures for each class of cement concrete specified. Sufficient material shall be obtained by the Authority's designated testing personnel at the proposed sources for verification of acceptability by test and for mix design. Materials failing to meet the specified requirements shall be rejected and new materials shall be resubmitted to the laboratory. The Authority's testing laboratory will

determine the proportions of cement, aggregate, water, air entraining agents, and other admixtures of all specified and proposed concrete mixtures by means of trial design batches and tests using the consistencies, air content and other properties suitable for the work and in accordance with the latest applicable AASHTO or ASTM Standards and designations.

TABLE 1
MASTER LIMITS TABLE

Class of Concrete	Minimum Compressive Strength at 28 Days	Minimum Cementitious Content	Water Cement Ratio	Slump	Air Content	Maximum Coarse Aggregate Size (703.02)	Notes
	PSI	LB/CY		INCHES	%	INCHES	
A	4000	611	0.38±0.02	6 ± 2	6 ± 1	1	3, 4
AA	4000	658	0.38±0.02	3.5	5 to 7	3/4	1, 3
AAA	4500	658	0.38±0.02	6 ± 2	6 ± 1	3/4	3, 4, 6
AAA-Deck	4500	658	0.42±0.02	6 ± 2	7.5 ± 1	3/4	3, 4, 6
AAA - Modified	4500	752	0.38±0.02	6 ± 2	6 ± 1.5	3/8	3,4
B	3000	517	0.40±0.02	6 ± 2	5 ± 1	1-1/2	1, 3
S	3500	635	0.38±0.02	6 ± 2	6 ± 1	1-1/2	1, 3
P	SEE PLANS	658	0.38±0.02	6 ± 2	5 ± 1	3/4	3, 4, 5
IS	3000	470	0.58	5 ± 1	3.0% Max	1-1/2	2, 3

NOTES:

1. All concrete shall contain either a normal water reducing admixture (Type A) or a high range water reducing admixture (HRWR) meeting the requirements of Subsection 701.0401. When a HRWR is used, a maximum of an 8.0 inch slump is allowed.

2. All concrete shall contain a non-chloride based, mid-range water reducing admixture (MRWR) meeting the requirements of ASTM C494.

3. All concrete shall contain a Portland Cement replacement. Portland Cement pre-blended with either fly ash or ground granulated blast-furnace slag may be used when accepted by the Resident.

   Due to the lower heat of hydration effect of high cement replacements, the Contractor is responsible for selecting a replacement level which is appropriate for the time of year if cold weather conditions are anticipated.

4. All concrete shall contain a high range water reducing admixture (HRWR) meeting the requirements of Subsection 701.0401. A minimum of one-half the design dosage of the HRWR should be added at the plant to insure thorough mixing. The HRWR should be added in strict accordance with the manufacturer's guidelines and limitations. The HRWR Guidelines shall be submitted to the Resident for review and approval. The concrete will not be slump tested by the Authority prior to the addition of the HRWR. The supplier shall provide the aggregate moisture adjustment and plant-added water on the delivery tickets. If additional slump is required in the field, it will be achieved with additional HRWR (in accordance with the manufacturer's recommendations and limitations).

5. A calcium nitrate corrosion inhibitor meeting the requirements of ASTM 494 Type C shall be added at a rate of not less than four (4.0) gallons per cubic yard.

6. Synthetic Fiber Reinforcement shall be added to all Concrete Pavement Slabs and ORT Slabs and Grade Beams concrete mixes in accordance with Special Provision 503 "Synthetic Fiber Reinforcement".

Deck concrete (Class AAA - Deck) may gain strength slower than other Authority mix designs, and the Contractor shall plan construction operations accordingly.

The mix design submitted by the Contractor shall include the following information:

A. Description of individual coarse aggregate stockpiles, original source, bulk specific gravity, absorption, gradation and alkali silica reactivity test results. A combined coarse aggregate blended gradation shall be provided.

B. Description of fine aggregate, original source, bulk specific gravity, absorption, colorimetric, gradation and Fineness Modulus (F.M.).

C. Description and amount of cement and cement replacement material.

D. Target water cement ratio.

E. Target water content by volume.

F. Target strength.

G. Target air content, slump, and concrete temperature.

H. Target concrete unit weight.

I. Type and dosages of air entraining and chemical admixtures.

Approval by the Authority will be contingent upon the ability of the mix design proportions to meet the concrete strength requirement and other factors that affect durability. Cement replacements are included in the cementitious material.

Concrete mix designs shall contain 15 to 30 percent fly ash replacement by weight, or 25 to 50 percent slag cement replacement by weight. Class AAA-Deck concrete mix designs shall contain a maximum of 30 percent slag cement replacement by weight.

Cast-in-place concrete shall contain not more than 660 lb/cy of cementitious material, except for Class AAA-Modified which shall contain no more than 760 lb/cy of cementitious material.

All concrete mixes must be designed in accordance with the criteria of this Section. The design proportions with the fine aggregates designated as a percent of the total aggregate must be stated in terms of aggregate in a saturated, surface dry condition and the batch weights will be adjusted by the Contractor for the actual moisture of the aggregate at the time of use.

Based on the design parameters, including minimum cement factor and maximum water cement ratio, a curve representing the relation between the water/cement ratio and the average seven day and 28 day compressive, or earlier strength at which the concrete is to receive its full working load, will be established by the Authority's laboratory for a range of values including all of the compressive strengths required. The curves shall be established by at least three points, each point representing average values from at least three test specimens. Amount of water used in the concrete, as determined from the curve, shall correspond to the required average strength called for in the Specifications in accordance with the ACI 301-89, Table for Laboratory Mix Design Data – Required Average Compressive Strength shown below. When required, the consistency of the basic mix selected shall be adjusted by the use of high range water reducers.

LABORATORY MIX DESIGN DATA
REQUIRED AVERAGE COMPRESSIVE STRENGTH

SPECIFIED f'_c	REQUIRED f'_{cr}
LESS THAN 3000 PSI	f'_c + 1,000 PSI
3000 PSI TO 5000 PSI	f'_c + 1,200 PSI
OVER 5000 PSI	f'_c + 1,400 PSI
The curves shall be established by at least three (3) points, each point representing the average values from at least three (3) test specimens for each age of seven (7) and twenty-eight (28) days. Laboratory tests are valid for ninety (90) days.	

The laboratory adjusted mix design will then be forwarded to the Contractor for his use. No change in the source or character of the mix ingredients may be made without notice to the Resident, and no new mix ingredients shall be used until the Resident has approved such

ingredients and new mix proportions, if they change. Additional testing, if required, shall be paid for by the Contractor.

502.0501 Quality Control

The Contactor shall control the quality of the concrete through testing, inspection and quality control practices which shall be sufficient to assure a product meeting the Contract requirements.

Concrete sampling for quality control (QC) shall be taken at the discharge point with pumped concrete sampling taken at the discharge end of the pump line.

For each truckload of concrete, the Contractor shall provide a Certificate of Compliance to the Authority at the time of the load placement. The Certificate of Compliance shall be a form acceptable to the Authority and shall include the following:

- Contract Name & Number
- Bridge Name (if applicable)
- Manufacturing Plant (Batching Facility)
- Name of Contractor (Prime Contractor)
- Date
- Time Batched/Time Discharged
- Truck No.
- Quantity (Quantity Batched this Load)
- Type of Concrete by Class and Producer Design Mix No.
- Cement Brand or Type, and Shipment Certification No.
- Temperature of Concrete at Discharge
- Target Weights per Cubic Yard and Actual Batched Weights for:

    1. Cement
    2. Pozzolanic additives, including fly ash, slag cement, and microsilica
    3. Coarse concrete aggregate
    4. Fine concrete aggregate
    5. Water (including free moisture in aggregates and water added at the Project)
    6. Admixtures brand and quantity (fl. oz./cubic yard)

        - Air-entraining admixture
        - Water reducing admixture
        - Other admixtures

- Placement Location

502.0502 Quality Assurance

The Authority will determine the acceptability of the concrete through a quality assurance program and field measurement of surface tolerance, alignment and trueness, plumb and batter, and finish.

The Authority will take verification tests at times deemed appropriate by the Resident. Verification tests will include compressive strength, air content and permeability.

Concrete sampling for verification tests will be taken at the discharge point, with pumped concrete sampling taken at the discharge end of the pump line.

Compressive strength test will be completed by the Authority in accordance with AASHTO T22 at 28 days except that no slump will be taken. The average of two cylinders will be used to determine compressive strength.

Testing for entrained air in concrete, at the rate of one test per load, shall be in accordance with AASHTO T152.

Determination of the concrete cover over reinforcing steel for structural concrete shall be made prior to concrete being placed in the forms. Bar supports, chairs, slab bolsters, and side form spacers shall meet the requirements of CRSI Chapter 3, Section 2.5 Class 1, Section 2.6 Class 1A or Section 4. All supports shall meet the requirements for type and spacing as stated in the Concrete Reinforcing Steel Institute (CRSI) Manual of Standard Practice, Chapter 3. Concrete will not be placed until the placing of the reinforcing steel and supports have been approved by the Resident. If the Contractor fails to secure Authority approval prior to placement, the Contractor's failure shall be cause for removal and replacement at the Contractor's expense. The Contractor shall notify the Resident, at least 48-hours prior to the placement, when the reinforcing steel will be ready for checking. Sufficient time must be allowed for the checking process and any needed repairs.

Rejection by Resident - For material not meeting Project Specifications, the Authority at its sole discretion will:

A. Require the Contractor to remove and replace the entire affected placement with concrete meeting the Contract requirements at no additional expense to the Authority; or,

B. Accept the material at a reduced payment as determined by the Authority.

Surface Tolerance, Alignment and Trueness, Plumb and Batter, and Finish - The Resident will measure each of these properties as follows:

A. Surface Tolerance - Exposed horizontal and sloping portions of the substructure, superstructure slabs, wearing surface, sidewalks, parapets, barriers, and wingwalls will be measured at randomly generated locations with a 10 foot straightedge once per 100 ft^2.

Measurements beyond tolerances given in Table 5, Subsection 502.14(E) will be cause for removal or pay adjustment and potential corrective action as determined by the Resident. The Contractor shall furnish the 10 foot straightedge. At the Resident's discretion, measurements may be taken with a lightweight profiler. When the Resident uses the lightweight profiler to measure tolerance, and the International Ride Index (IRI) is between 250 and 300 inches/mile for any one placement, a pay adjustment will be made. When tolerances exceed 300 inches/mile, there will be cause for removal or a pay adjustment and potential corrective action.

B. Alignment and Trueness - Alignment and trueness may be measured by the Resident longitudinally along any vertical surface of any portion of the structure and shall not exceed a deviation of 1/4 inch in three feet for structures up to 30 feet in length. Structures in excess of 30 feet in length will be subject to a maximum tolerance of two inches. Measurements exceeding these tolerances will be cause for removal or pay adjustment and potential corrective action as determined by the Resident.

C. Plumb and Batter - The Resident will measure all columns and other vertical surfaces that will remain exposed to determine actual plumbness and batter. Measurements will be taken subsequent to every placement. Vertical faces of columns will be measured at a minimum of two faces at right angles to each other. Other vertical surfaces will be measured once every 15 feet along the face of longitudinal wall. All measurements will be made on a per placement basis and will be subject to a tolerance of 1/4 inch in 10 feet. Measurements between 1/4 inch and 1/2 inch in 10 feet will result in pay adjustments. Measurements beyond 1/2 inch in 10 feet will be cause for removal or pay adjustment and potential corrective action as determined by the Resident.

D. Finish - The Resident will measure and determine the areas to be repaired in accordance with Subsections 502.10(d), 502.13, and 502.14(e) for each placement. Areas to be repaired will be measured as a percentage of the total surface area of the placement. Those areas to be repaired that are between zero and five percent of the total surface area of the placement will result in no pay adjustments. Areas to be repaired that are between five percent and 10 percent will result in pay adjustments. Areas greater than 10 percent of the total surface area of the placement will be cause for removal or pay adjustment and corrective action as determined by the Resident.

Appropriate pay adjustments, as described in Subsection 502.194, will be made for any or all of the properties described above that do not meet Specification requirements.

502.0505 Resolution of Disputed Acceptance Test Results

The Contractor shall work cooperatively with the Resident in maintaining Control Charts in order to identify potential issues with any test results and take appropriate actions to address these issues before they become disputed issues. Circumstances may arise where the Authority's test results indicate that a material is unacceptable and removal is warranted. If the material is marginally acceptable, it may remain in place and be paid for at a reduced rate determined by the Authority. This Subsection provides recourse for the Contractor to contest the Authority's QA test results as follows, at no additional cost to the Authority:

A. Compressive Strength - The Contractor shall take appropriate corrective measures when the Resident advises the Contractor that the average of three consecutive compressive strength test results fall to less than 150 psi above the specified strength, or any single test falls more than 200 psi below the specified strength. The Contractor shall make corrective changes in materials, mix proportions, or in the concrete manufacturing procedure before additional concrete of the same class is placed.

There may be situations where there is the possibility that an underlying structural element could be built-upon before test results for the underlying element have been reported, based upon the normal frequency of testing. In these instances, it is in the Contractor's best interest to perform additional testing that will provide indications that the concrete will meet the requirements of the applicable Specifications, prior to continuing to build upon this underlying element. In the extreme case where an underlying structural element has been built-upon before test results for the underlying element have been reported, the above mentioned safeguards of tracking and additional testing have failed and the final test results for the concrete of the underlying element indicate that removal is warranted and the Contractor's QC results do not confirm the Authority's test results, the following procedure concerning compressive strength may be undertaken by the Contractor and witnessed by the Authority, within 36 days of the placement date:

1. Drilled core specimens shall be retrieved from the concrete in question in accordance with the requirements of ASTM C42/C42M, Standard Test Method for Obtaining and Testing Drilled Cores and Sawed Beams of Concrete. The core strength acceptance and evaluation criteria included in ACI 318 shall not apply.

2. Three drilled core specimens shall be taken from each sublot in question, from randomly selected locations to be representative to the entire volume of the sublot. The Resident and the Contractor's representative shall agree on the sample locations prior to drilling. The specimens shall have a minimum diameter of four inches and a minimum length of eight inches.

3. The concrete cores shall be taken directly from the Project to the Authority's designated independent testing laboratory where they will be tested. The cores shall be protected from drying and damage during transport. The Contractor shall make arrangements with the Authority's designated independent testing laboratory for testing prior to beginning the coring process.

4. Core test results will be evaluated by the Authority with the understanding that the strength of drilled cores is, in general, 85 percent of that of corresponding standard-cured molded cylinders. Therefore, the test results of the three cored cylinders shall be averaged, and then divided by a factor of 0.85. The resulting compressive strength shall be used by the Authority in the final determination of the acceptability of the material in question and shall replace the contested test result in computing pay adjustments for the sublot in question. If coring is not done with the 36 day time limit, the Authority will not allow dispute testing of the sublot.

5. If the Authority concludes that the strength of the structural element in question is adequate as a result of the above procedure, then the concrete shall remain in place and will be paid for at a reduced rate, as determined by the Authority. If the Authority concludes that the strength of the structural element in question is unsatisfactory as a result of the above procedure, then the Authority will direct the Contractor to take appropriate actions, as determined by the Authority, and at no additional cost to the Authority.

B. Entrained Air – In order to dispute the Authority's test results, the Contractor must test material from the same sample as the Authority. If the difference between the Authority's and the Contractor's air tests is equal to or greater than 0.8 percent, then the material shall be retested by both parties. If the difference between the retests is equal to or greater than 0.8 percent, the concrete placement will be suspended immediately, and 1) both air meters shall be calibrated immediately, or 2) the Contractor shall immediately replace both air meters. Once it is demonstrated the QC and Acceptance air meters are in agreement with 0.8 percent, the concrete placement may resume.

502.06 Batching

Measuring and batching shall be performed at an approved batching plant, unless otherwise approved by the Resident. The batching plant shall meet the requirements of AASHTO M-157.

502.0701 Delivery

A. Delivery and discharge of the concrete from the mixer shall be completed within a maximum of 1-1/2-hours from the time the cement is added to the aggregate, except that in hot weather when the concrete mix temperature exceeds 70˚F or under other conditions contributing to quick stiffening of the concrete, delivery and discharge from the mixer shall be completed within one hour. When approved by the Resident, the use of a retarding admixture (Type D) may be used for increasing the one hour discharge time to 1-1/2-hours, provided concrete temperatures are kept below 80˚F and conditions contributing to quick stiffening of the concrete are not present.

B. Concrete, which has been condemned for any reason, shall be removed immediately from the jobsite and disposed of properly.

C. Concrete temperature before placement shall not exceed 85˚F.

D. All concrete trucks must have working revolution counters, and be set to zero at the start of mixing. Any truck without a counter will be rejected from the job unless the Contractor can assure the Resident that adequate mixing has been achieved.

502.08 Cold Weather Concrete

All frost, ice, and snow shall be removed from all material that will be in contact with fresh concrete.

Unless authorized by the Resident, the mixing and placing of concrete shall be discontinued when the atmospheric temperature is below 40˚F in the shade and dropping and shall not be resumed until the atmospheric temperature is as high as 35˚F in the shade and rising. If authorization is granted for the mixing and placing of concrete under atmospheric conditions different from those specified above, the water shall be heated to a temperature not exceeding 180˚F. When either the aggregate or water is heated to above 120˚F, they are to be combined first in the mixer before the cement is added. If the atmospheric temperature is below 25˚F, the aggregate shall also be heated when approved by the Resident. Materials containing frost or lumps of frozen material shall not be used. Stockpiled aggregates may be heated by the use of dry heat or steam. Aggregates shall not be heated directly by gas or oil flame or on sheet metal over a fire. When aggregates are heated in bins, steam coil or water coil heating or other methods that will not be detrimental to the aggregates may be used. The heating apparatus shall be capable of heating the mass uniformly and preventing the occurrence of spots of overheated material. The temperature of the mixed concrete shall be between the minimum values shown in Table 4 and 70˚F when it is placed in the forms. Salt or other chemicals shall not be added to the concrete for any reason whatsoever, except by written permission of the Resident.

TABLE 4
COLD WEATHER TEMPERATURE TABLE

MINIMUM FORM DIMENSION SIZE

Less than 300 mm (12 in.)	300 – 900 mm (12 - 36 in.)	900 – 1800 mm (36 - 72 in.)	Greater than 1800 mm (72 in.)
13˚C (55˚F)	10˚C (50˚F)	7˚C (45˚F)	5˚C (40˚F)
MINIMUM CONCRETE TEMPERATURE AS PLACED			

When permitted by the Resident, footings may be protected by completely submerging them by admitting water inside the cofferdam. Until submersion takes place, the temperature of the concrete and its surface shall be controlled as specified above. Submersion shall proceed slowly and the temperature of the air or water shall be maintained sufficient to prevent ice from forming within the cofferdam for a period of seven (7) days after the placing of the concrete.

When depositing concrete under water, there shall be no ice inside the cofferdam.

Permission given to place concrete under the conditions mentioned above shall not relieve the Contractor of responsibility for obtaining satisfactory results. The Contractor shall be wholly responsible for the protection of concrete during cold weather operations and any concrete injured by frost action or overheating shall be removed and replaced at the Contractor's expense.

502.10 Forms and False Work

A. Construction of Forms - All forms shall be well built, substantial and unyielding, securely braced, strutted and tied to present motion and distortion while concrete is being placed in them. The forms shall be strong enough to safely support the weight of the concrete and all superimposed loads (such as runways, concrete buggy loads, workers, scaffolding, etc.) placed upon them.

Forms shall be built to conform to the dimensions, location, contours and details shown on the Plans. The faces of forms against which the concrete is to be placed shall be dressed smooth and uniform and shall be free from winds, twists, buckles and other irregularities.

Stay-in-place forms of any type will not be permitted for any part of the slab structures, unless otherwise indicated on the Plans.

The placing of concrete in excavated pits and trenches without forms will be permitted only in exceptional cases and then at the discretion of the Resident.

All corners within the forms shall be fitted with chamfer strips mitered at their intersections, except that chamfer strips will not be required as follows: (1) on corners of slab blocking of interior steel beams and the inside of exterior steel beams; (2) on corners constructed transversely at the underside of the slab of superstructures which consist of a concrete slab on steel beams; (3) on footings not exposed to view; and (4) on all structures when more than two feet below the final finished ground line.

Chamfer strips shall have a width across the diagonal face between 1/2 inch and 3/4 inch. The size to be adopted for a given portion of the work shall depend upon the general dimensions. Except where special size chamfer strips are shown on the Plans, the size of chamfer strips shall be uniform on individual projects. Provisions shall be made for the chamfering of the top edges of abutment bridge seats and wing walls, tops of piers and retaining walls, tops of through girders, roadway curbs, etc., by nailing chamfer strips inside the forms. Unless otherwise provided, all chamfer strips shall produce plain flat surfaces on the concrete.

The forms for beams, girders and spandrel arches shall be so constructed as to permit the sides to be removed without disturbing the supports.

All foreign matter within the forms shall be removed before depositing concrete in them.

In all cases where metal anchorages or ties within or through the face forms are required to hold the forms in their correct position, such anchorages or ties shall be of ample strength and shall be constructed so that the metal work can be removed to a depth of not less than one inch from the face and back surfaces of the concrete without damaging such surfaces.

Elevations will be taken on the top flanges of structural steel beams and girders for the purpose of determining the depth of blocking necessary for the construction of the forms for the concrete slab, after the following conditions have been satisfied:

1. The satisfactory erection of the superstructure structural steel beams or girders, including any required flooring beams and stringers, unless an alternative plan is submitted by the Contractor and approved by the Authority.

2. All bolt tightening operations must be complete.

3. No foreign loads supported by the beams or girders are present.

The Contractor shall submit working drawings for approval of the proposed forms supporting the superstructure slabs, and of the proposed forms and false work supporting the overhanging portion of the superstructure slab in accordance with Subsection 105.7. The working drawings shall show the size, spacing and location of the supporting members, and the proposed loads and weight of the concrete forms to be carried by the members. The proposed superstructure slab form and false work systems' computations, plans, and working drawings shall be designed and sealed by the Contractor's Professional Engineer, who must be registered in the State of Maine. This Professional Engineer may be directly employed or otherwise retained by the Contractor.

In the construction of forms and false work for the portion of superstructure slabs overhanging the exterior members of beam and girder spans, forms and supporting devices resulting in point loadings on the exterior members shall not be used. Loads resulting from supporting devices shall be distributed directly to the flanges by means of brackets or braces.

All forms shall be inspected and approved by the Professional Engineer responsible for the design of the form and false work systems before the placing of any concrete within them. The Professional Engineer shall, after inspection, provide a sealed certification to the Resident that the systems were erected in conformance with the Professional Engineer's Plans and design details.

B. Surface Treatment of Forms - The inside surfaces of forms shall be uniformly coated with form oil or other approved surface treatment.

Form surfaces shall be treated before placing the reinforcing steel.

C. Construction of False Work - All false work used for supporting reinforced concrete superstructures shall be composed of members having ample structural sections to resist all loads imposed upon them, with deformations less than span length / 360.

When the vertical members of false work consist of piles or when framed or other false work is supported upon piles, the piles shall be driven to secure a safe load resistance.

When false work is supported upon mud sills, the foundation pressures resulting from the imposed loads upon the mud sills (false work, forms, fresh concrete, scaffolding, etc.) shall not exceed the capacity of the on-site soils.

All false work systems shall be designed to support all vertical loading and any differential settlement forces, all horizontal and longitudinal forces, and shall account for any temporary unbalanced loading due to the placement sequence of the concrete. Sufficient redundancy shall be designed into centering or false work systems so that the failure of any member shall not cause a collapse. Design computations, layout drawings, and details of materials for the centering or false work systems shall be submitted to the Authority for its records. The erection of centering or false work systems shall be accomplished in strict conformance with the design and details. No concrete shall be placed without prior approval of the Resident.

False work systems adjacent to and/or over traveled ways shall additionally be designed to resist any vibration forces due to traffic and shall incorporate sufficient protection against impact by errant vehicles.

All false work system computations, plans and working drawings shall be designed and sealed by the Contractor's Professional Engineer, who must be registered in the State of Maine. This Professional Engineer may be directly employed or otherwise retained, by the Contractor. Prior to concrete placement, the Professional Engineer responsible for the design of the false work system shall, after false work inspection, provide a sealed certification to the Resident that the system was erected in conformance with the Professional Engineer's Plans and design details.

False work shall be so constructed that the forms will have a camber, the amount depending upon the deflection anticipated in the design.

Forms supported upon false work shall be provided with a satisfactory means for their adjustment in the event of settlement or deformation of the false work due to overloading or other causes.

Provisions shall be made for the gradual lowering of false work and rendering the supported structure self-supporting.

D. Removal of Forms and False Work

1. Location, weather conditions, cementitious materials used and the character of the structure involved shall be considered in determining the time for the removal of forms and false work. Forms and false work shall not be removed until concrete cylinders cured with the structure establish that the concrete has developed 80 percent of design strength. The Contractor shall cast and break two cylinders per sublot and furnish the Resident with these test reports before removal of the forms and false work.

   When approved by the Resident, the vertical forms of footings, walls, columns and sides of beams and slabs may be removed 48-hours after completion of placement of concrete, exclusive of the time the ambient air temperature is below 45˚F and provided the following conditions are met:

Immediately after the forms are removed, defects in the concrete surface shall be repaired in accordance with Subsection 502.13 and the repaired area thoroughly dampened with water. The surfaces of exposed concrete shall be cured for the remainder of the seven day curing period by the application of a product listed on the Maine Department of Transportation Prequalified list of curing compounds. The curing compound shall be applied continuously by an approved pressure spraying or distributing equipment at a rate necessary to obtain an even, continuous membrane, meeting the manufacturer's recommendation but at a rate of not less than 1 gal/200 ft^2 of surface. Other methods of curing concrete may be used with the prior approval of the Resident.

2. Forms and false work, including blocks and bracing, shall not be removed without the consent of the Resident. The Resident's consent shall not relieve the Contractor of responsibility for the safety of the work. In no case shall any portion of the wood forms be left in the concrete. As the forms are removed, all projecting metal devices that have been used for holding the forms in place shall be removed in accordance with Subsection 502.10. The holes shall be filled as required in Subsection 502.13.

502.11 Placing Concrete

A. General – Concrete shall not be placed until forms and reinforcing steel have been checked and approved by the Resident. The forms shall be clean of all debris. The method and sequence of placing the concrete shall be approved before any concrete is placed.

All concrete shall be placed before it has taken its initial set and, in any case, as specified in Subsection 502.0701. Concrete shall be placed in horizontal layers in such a manner as to avoid separation and segregation. A sufficient number of workers for the proper handling, tamping and operation of vibrators shall be provided to compact each layer before the succeeding layer is placed and to prevent the formation of cold joints between layers. Care shall be taken to prevent mortar from spattering on structural steel, reinforcing steel and forms. Any concrete or mortar that becomes dried on the structural steel, reinforcing steel or forms shall be thoroughly cleaned off before the final covering with concrete. Following the placing of the concrete, all exposed surfaces shall be thoroughly cleaned as required, with care not to injure any surfaces.

Concrete shall not come in direct contact with seawater during placing and for a period of 72- hours thereafter, except as follows:

1. Concrete seals that are located entirely below low tide.

2. Concrete footings constructed in the dry and located entirely below low tide or final ground elevation.

3. Concrete Fill placed under water.

Concrete in any section of a structure shall be placed in approximately horizontal layers of such thickness that the entire surface shall be covered by a succeeding layer before the underlying layer has taken its initial set. Layers shall not exceed 18 inches in thickness and be compacted to become an integral part of the layer below. Should the placement be unavoidably delayed long enough to allow the underlying layer to take initial set or produce a so-called "cold joint", the following steps shall be taken:

- An incomplete horizontal layer shall be bulk headed-off to produce a vertical joint.
- Horizontal joints shall be treated as required in this Subsection 502.11(F).
- Portland Cement concrete with a high range, water reducing admixture shall not be placed when the concrete mix temperature is below 40˚F or above 85˚F.

The concrete in superstructures shall be placed monolithically except when construction joints are shown on the Plans or are authorized in accordance with approved details submitted by the Contractor. If the concrete in the stems of T-beams is to be placed independent of the slab section, the construction joint shall be located at the under side of the slab and the bond between stem and slab shall be a mechanical one. The bond shall be produced by embedding two *x* four, four inch wooden blocks having a length approximately four inches less than the width of the stem and placed horizontally at right angles to the centerline of the beam in the top surface of the concrete immediately following the completion of the concrete placement. To provide for the uniform spacing of the blocks and their ready removal when the concrete has taken a set sufficient to hold its form, the blocks shall be firmly nailed upon a board at a distance of one foot center to center. The blocks shall be thoroughly oiled to facilitate their ready removal from the concrete.

In arch spans, the order of construction or sequence of the work, as shown on the Plans shall be followed in the placing of concrete.

In no case shall the work on any section or layer be stopped or temporarily discontinued within 18 inches below the top of any face, unless the Plans provide for a coping having a thickness less than 18 inches in which case, at the option of the Resident, the construction joint may be made at the under side of the coping. Concrete in columns shall be placed in one continuous operation, unless otherwise directed.

Fresh concrete, threatened with rain damage shall be protected by approved means. Sufficient material for covering the work expected to be done in one day shall be on hand at all times for emergency use. The covering shall be supported above the surface of the concrete.

Concrete Fill shall be placed at least to the pay limits shown on the Plans. Forms may be omitted at the Contractor's option. Vibration of concrete will not be required. The Contractor has the option of placing concrete fill under water or in the dry.

B. Chutes, Troughs, Pipes and Buckets - Sectional drop chutes or short chutes, troughs, pipes and buckets when used as aids in placing concrete, shall be arranged and used in

such a manner that the ingredients of the concrete do not become separated or segregated. Wood and aluminum chutes, troughs, pipes or buckets shall not be used.

Dropping the concrete a distance of more than six feet, unless confined by closed chutes or pipe will not be permitted. The concrete shall be deposited at or as near as possible to its final position.

C. Vibrating - Mechanical, high frequency internal vibrators shall be used, operating within the concrete, for compacting the concrete in all structures and precast and cast-in-place piles, with the exception of concrete placed under water. The vibrators shall be an approved type with a frequency of 5,000 to 10,000 cycles per minute and shall be visibly capable of properly consolidating the designed mixture. A spare vibrator shall be available on the Project at all times during the placing of concrete.

Sufficient vibrators shall be used to consolidate the incoming concrete within five (5) minutes after placing. Vibrators shall neither be held against forms or reinforcing steel, nor shall they be used for flowing the concrete or spreading it into place. Over-vibrating shall not be allowed.

D. Dewatering Forms - All forms shall be dewatered before concrete is placed in them. Pumping will not be permitted from the inside of forms while concrete is being placed. Moving water shall not be permitted to be exposed to fresh concrete.

E. Depositing Concrete Under Water - No concrete shall be deposited under water except for cofferdam seals. Pumping will not be allowed within the cofferdam while concrete is being placed.

Seal concrete shall be placed carefully in a compact mass in its final position by means of a tremie or by other approved means and shall not be disturbed after being deposited. Bottom dump buckets will not be permitted. Special care must be exercised to maintain still water at the point of deposit. Seal concrete shall not be placed in running water. The method of depositing concrete shall be so regulated as to produce approximate horizontal surfaces. Each seal shall be placed in one continuous operation.

When a tremie is used, it shall consist of a tube not less than 10 inches in diameter. The means of supporting the tremie shall be such as to permit free movement of the discharge end over the entire seal and to permit its being lowered rapidly, when necessary to choke-off or retard flow. The tremie shall be filled by a method that will prevent washing of the concrete. The discharge end shall be completely submerged in concrete at all times and the tremie tube shall be kept full to the bottom of the hopper. The flow shall be regulated by raising or lowering the tremie.

When the horizontal area of the tremie seal is large, several tremie hoppers shall be provided and positioned strategically to allow easy deposit of concrete near the point where it is needed to avoid moving concrete horizontally through the water. The number of tremie hoppers and the work plan shall be approved by the Resident.

All laitance or other unsatisfactory material shall be removed from the surface of the seal before placing additional concrete. The surface shall be cleaned by scraping, chipping or other means that will not injure the concrete.

The placing and dewatering of seal concrete within cofferdams shall be in accordance with Section 511, Cofferdams.

F. Construction Joints - Construction joints shall be located where shown on the Plans or permitted by the Resident. When the concrete is in seawater, except concrete cores for stone masonry, no horizontal construction joint will be permitted between extreme low tide and extreme high tide elevations.

At horizontal construction joints, temporary gage strips having a minimum thickness of 1-1/2 inches shall be placed horizontally inside the forms along all exposed faces to give the joints straight lines. The joint shall be so constructed that the surface of the concrete will not be less than 1/4 inch above the bottom of the gage strip. Before placing fresh concrete, the temporary gage strip shall be removed, the surfaces of construction joints shall be thoroughly cleaned, drenched with water until saturated and kept saturated until the new concrete is placed. Immediately prior to placing new concrete, the forms shall be drawn tight against the concrete already in place. Concrete in substructures shall be placed in such a manner that all horizontal joints will be horizontal and if possible, in locations such that they will not be exposed to view in the finished structure.

Where vertical construction joints are necessary, reinforcing bars shall extend across the joint in such a manner as to make the structure monolithic. Construction joints through paneled wing walls or other large surfaces which are to be treated architecturally will not be allowed except as shown on the Plans. All vertical construction joints in abutments and retaining walls shall contain water stops as shown on the Plans. The water stops shall be one continuous piece at each location.

All horizontal construction joints in abutments and retaining walls shall be constructed using a joint cover, as shown on the Plans.

Construction joints in the wearing surface shall be located where called for on the Plans. No other construction joints will be allowed.

All joints shall be formed in the manner detailed on the Plans. The forms shall not be treated with oil or any other bond breaking material that will adhere to the concrete.

Sealing slots shall be provided at all joints in the wearing surface that are located directly over a slab construction joint.

Construction joints in the wearing surface not receiving a sealing slot shall be brushed with a neat cement paste immediately prior to making the adjacent concrete placement.

After the concrete has been cured, sealing slots, when required, shall be sandblasted with approved equipment to remove all laitance and foreign material on the surfaces of the slots. The bottom of the sealing slots shall receive an approved bond breaker. The joint shall then be filled within 1/8 inch of the surface with a poured sealant conforming to the following requirements and in accordance with the manufacturer's recommendations. The joint sealant supplied shall be an approved two component, elastomeric sealant capable of 50 percent joint movement. Both components shall be in liquid form and the combining ratio of components by volume shall be as recommended by the manufacturer.

G. Concrete Wearing Surface and Structural Concrete Slabs on Precast Superstructures When called for on the Plans, a separate concrete wearing surface or structural concrete slabs on precast superstructures shall be bonded to the supporting slab. No surface preparation of a new structural concrete slab shall begin before completion of the specified curing period.

When the supporting slab is composed of cast-in-place concrete, the Contractor shall scabble the entire surface of the structural concrete slab and then sandblast the entire structural concrete slab surface. When the supporting slab is comprised of precast units, the Contractor shall sandblast the entire deck surface.

The entire area of the deck surface and the faces of curb and barrier walls or other median devices, up to a height of one inch above the top elevation of the wearing surface or slab, shall be cleaned to a bright, clean appearance which is free from curing compound, laitance, dust, dirt, oil, grease, bituminous material, paint and all other foreign matter. Air lines shall be equipped with effective oil traps. The cleaning of an area of the deck shall be performed within the 24-hour period preceding placement of the wearing surface. The cleaning shall be performed by dry sand blasting or other methods approved by the Resident. All debris from the cleaning operation shall be thoroughly removed by compressed dry air from the cleaned surfaces and adjacent areas. The cleaned areas shall be protected against contamination before placement of the wearing surface. Contaminated areas shall be recleaned by dry sand blasting. Prepared, areas that have not received the wearing surface within 36-hours shall be recleaned.

All horizontal surfaces in contact with the wearing surface shall receive a coating of bonding grout or bonding agent listed on Maine Department of Transportation Prequalified List of Bonding Agents. The vertical faces in contact with the wearing surface shall be broomed-up to the elevation of the top of the wearing surface with bonding grout or an approved bonding agent.

Stiff bristled street brooms shall be used to brush the grout onto the surface. The coating shall not exceed 1/8 inch in thickness. The rate of progress in applying grout shall be limited so the grout does not become dry before it is covered with new concrete. During delays in the surfacing operations, should the surface of the grout indicate an extensive amount of drying, the grout shall be removed by methods approved by the Resident and the area should be regrouted.

The bonding grout shall have Portland Cement and fine aggregate proportioned 2 to 1 by volume. The fine aggregate from which the material larger than 1/8 inch has been removed shall be the same source as used in the concrete. The cement and fine aggregate shall be measured

separately in appropriately sized containers. The fine aggregate shall be deposited in an approved mechanical mortar mixer before adding cement. Water shall be added in sufficient quantity to allow flow of the grout without segregation of the grout ingredients.

No water shall be added after initial mixing. The grout shall not be allowed to separate before placement. The cement to water contact time of the grout shall not exceed 30 minutes before it is placed. Any grout that has dried or become unworkable before application, as determined by the Resident, shall not be incorporated into the work. The use of retarding admixtures for increasing the discharge time limits will be allowed.

The Resident may approve the batching of bonding grout at an approved commercial concrete batch plant. In this case, mixing and delivery shall be in transit truck mixers. The bonding agent shall be one of the products listed on the Maine Department of Transportation's List of Prequalified Bonding Agents and shall be applied in accordance with the manufacturer's recommendations.

No structural concrete slab structure, including but not necessarily limited to, concrete deck slabs, wearing surfaces, simple slab spans and slabs on precast superstructures, shall be commenced if the combination of ambient air temperature, relative humidity, wind speed, and plastic concrete temperature result in a surface moisture evaporation rate theoretically equal to or greater than 0.1 $lb/ft^2/hr.$ of exposed surface (refer to the Rate of Evaporation from Concrete Surface Chart). If the surface moisture evaporation rate rises to 0.15 $lb/ft^2/hr.$ of exposed surface, the Contractor shall immediately implement remedial actions to reduce the surface moisture evaporation rate. The temperature of the concrete shall not exceed 75˚F at the time the concrete is placed in its final position. The maximum temperature of the surface on which concrete will be placed shall be 90˚F. The Contractor shall provide all equipment and perform all measurements and calculations in the presence of the Resident to determine the rate of evaporation.

RATE OF EVAPORATION FROM CONCRETE SURFACE NOMOGRAPH

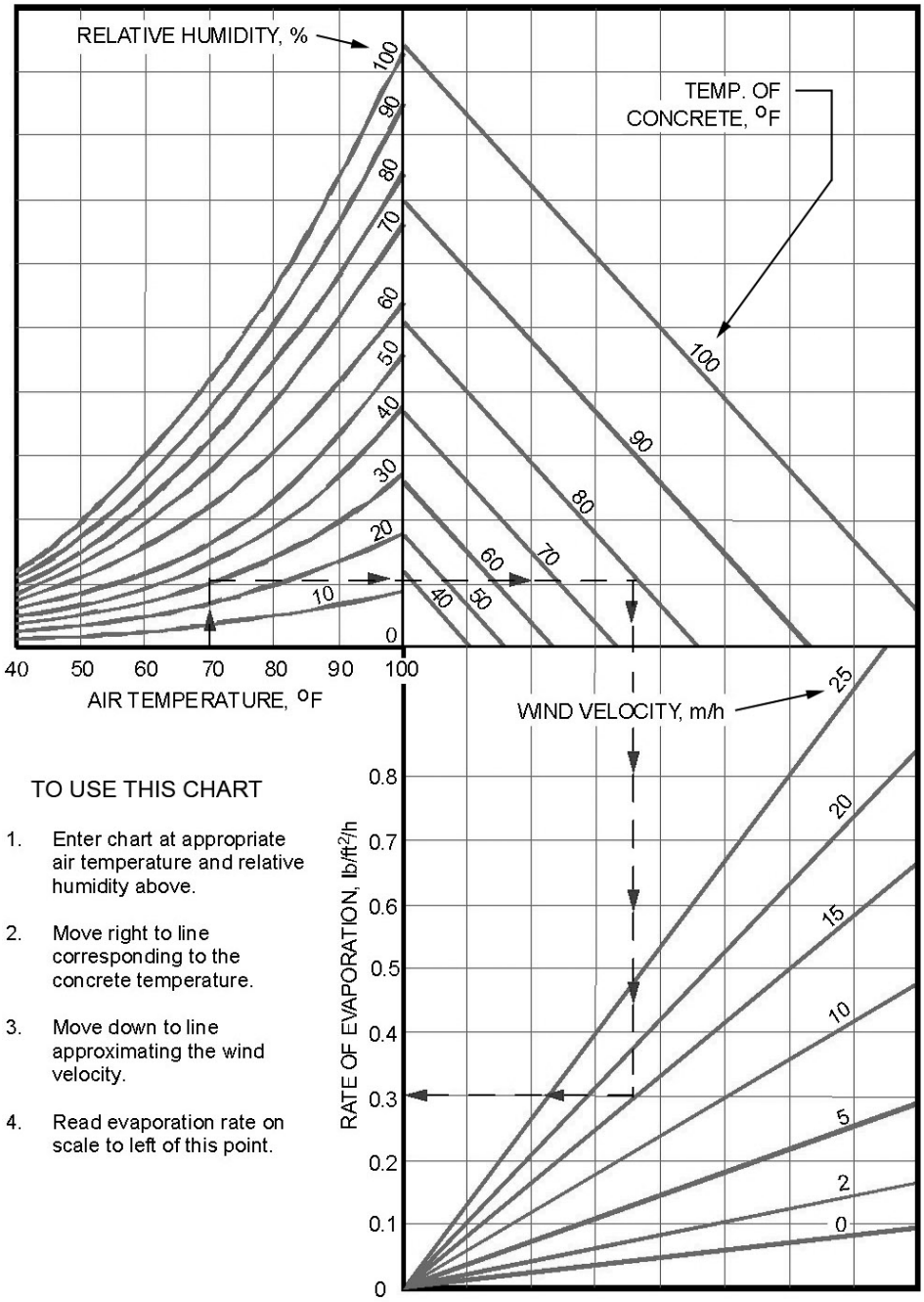

TO USE THIS CHART

1. Enter chart at appropriate air temperature and relative humidity above.
2. Move right to line corresponding to the concrete temperature.
3. Move down to line approximating the wind velocity.
4. Read evaporation rate on scale to left of this point.

502.12 Expansion and Contraction Joints

Expansion and contraction joints shall be located and constructed or sawn as shown on the Plans and within the timeline allotted. Water stops shall be one continuous piece at each location. Joint cover, as shown on the Plans, shall be applied to all joints where water stops cannot physically be installed, as determined by the Resident.

502.13 Repairing Defects and Filling Form Tie Holes in Concrete Surfaces

After the forms are removed, all surface defects and holes left by the form ties shall be repaired.

All fins and irregular projections shall be removed from the following: Surfaces which are visible in the completed work; surfaces to be waterproofed; and the portion of vertical surfaces of substructure units which is below the final ground surface to a depth of 12 inches, not including underwater surfaces.

In patching surface defects, all coarse or fractured material shall be chipped away until a dense uniform surface, exposing solid coarse aggregate is obtained. Feathered edges shall be sawcut away to form faces having a minimum depth of one inch perpendicular to the surface. All surfaces of the cavity shall be saturated thoroughly with water, after which a thin layer of neat cement paste shall be applied. The cavity shall then be filled with thick, reasonably stiff mortar, not more than 30 minutes old, composed of material of the same type and quality and of the same proportions as that used in the concrete being repaired. The surface of this mortar shall be floated before initial set takes place and shall be neat in appearance. The patch shall be water cured for a period of five (5) days.

If the removal of defective concrete materially impairs the soundness or strength of the structure, as determined by the Resident, the affected unit shall be removed and replaced by the Contractor at their expense.

The holes left by form ties, on the portions of substructure concrete that are to be permanently covered in the finished work, may be filled with an acceptable grade of plastic roofing cement. Holes in the bottom of slabs caused by supporting hangers need not be filled with the exception of voids that expose the top side of a girder top flange. Where holes in the deck or haunch are required to be filled, this work shall be completed using an approved high performance elastomeric sealant.

502.14 Finishing Concrete Surfaces

Neat cement paste, dry cement powder or the use of mortar for topping or plastering of concrete surfaces will not be permitted.

A. Float Finish - A float finish for horizontal surfaces shall be achieved by placing an excess of concrete in the form and removing or striking-off the excess with a template or screed, forcing the coarse aggregate below the surface. Creation of concave surfaces shall be avoided.

After the concrete has been struck-off, the surface shall be thoroughly floated to the finished grade with a suitable floating tool. Aluminum and steel floats are not allowed.

Float finish, unless otherwise required, shall be given to all horizontal surfaces except those intended to carry vehicular traffic and those of curbs and sidewalks.

B. Structural Concrete Slab Structures – Include, but not limited to, structural concrete deck slabs, wearing surfaces, slabs on precast superstructures, top and bottom slabs of box culverts, approach slabs, rigid frame structures and simple slab spans, as applicable. Screed rails shall be set entirely above the finished surface of the concrete and shall be supported in a manner approved by the Resident. Where shear connector studs are available, welding to the studs will be permitted. No welding will be permitted directly on the stringer flanges to attach either screed rail supports or form supports of any type.

Screed rail supports set in the concrete shall be so designed that they may be removed to at least 50 mm [2 inches] below the surface of the concrete. Voids created by removal of the upper part of the screed rail supports shall be filled with mortar having the same proportions of sand and cement as that of the slab or wearing surface. The mortar shall contain an approved additive in sufficient proportions to produce non-shrink or slightly expansive characteristics.

The rate of placing concrete shall be limited to that which can be finished without undue delay and shall not be placed more than 10 feet ahead of strike-off.

The Contractor shall furnish a minimum of two work bridges behind the finishing operation, capable of spanning the entire width of the deck and supporting at least a 500 lb. load without deflection to the concrete surface, to be supported on the screed rails. These working bridges shall be used by the Contractor for touch-up and curing cover application and shall be available for inspection purposes. When the overall length of the structure is 60 feet or less only one working bridge will be required.

An approved bridge deck finishing machine complying with the following requirements shall be used, except as otherwise specified, for finishing structural concrete slab structures. The finishing machine shall have the necessary adjustments, built in by the manufacturer, to produce the required cross section, line and grade. The supporting frame shall span the section being cast in a transverse direction without intermediate support. The finishing machine shall be self-propelled and capable of forward and reverse movement under positive control. Provisions shall be made for raising all screeds to clear the screeded surface for traveling in reverse. The screed device shall be provided with positive control of the vertical position.

The finishing machine shall be self-propelled with one or more oscillating screeds or one or more rotating cylinder screeds. An oscillating screed shall oscillate in a direction parallel to the centerline of the structure and travel in a transverse direction. A rotating cylinder screed shall rotate in a transverse direction while also traveling in the same direction. Either type of screed shall be operated transversely in overlapping strips in the longitudinal direction not to exceed six inches. One or more powered augers shall be operated in advance of the screed(s) and a drag (pan type) float shall follow the screed(s). For concrete placements less than six (6)

inches in depth, vibratory pan(s) having a minimum of 3000 vibrations/min shall be operated between the oscillating screed(s) or rotating cylinder screed(s) and the power auger(s). For concrete placed in excess of 3-1/2 inches but less than six (6) inches in thickness, hand- operated spud vibrators shall be used in addition to the machine vibratory pan(s).

The transversely operated rotating cylinder(s) of the bridge deck finishing machine shall be rotated such that the direction of the rotation of the cylinder(s) at the surface of the concrete is in accordance with the manufacturer's recommendations.

Concrete immediately in front of the power auger(s) of a bridge deck finishing machine shall be placed or cut to a depth no higher than the center of the rotating auger(s). The advance auger(s) shall strike-off the concrete to approximately 1/4 inch above the final grade. The concrete shall then be consolidated with the vibrating pan(s) and then finished to final grade.

A small handheld pan vibrator shall be required at edges and adjacent to joint bulkheads. In lieu of the handheld pan vibrator equipment, the Resident may approve small spud vibrator(s).

Lightweight, vibrating screeds may be used on slab structures which are more than 12 inches below the roadway finish grade or have a length of 30 feet or less, or where concrete placements are specified to be less than 16 feet in width and shall have the following features:

1. It shall be portable and easily moved, relocated, or adjusted by no more than four persons.
2. The power unit shall be operable without disturbing the screeded concrete.
3. It shall be self-propelled with controls that will allow a uniform rate of travel and by which the rate of travel can be increased, decreased or stopped.
4. It shall have controlled, uniform, variable frequency vibration, end to end.
5. It shall be fully adjustable for flats, crowns, or valleys.
6. The screed length shall be adjustable to accommodate the available work area.

When a lightweight vibrating screed is utilized, the concrete shall be placed or cut to no more than 1/2 inch above the finished grade in front of the front screed. The screed shall be operated such that at least three feet of concrete is in position in front of the screed.

Supporting slabs for bituminous wearing surfaces shall be finished in accordance with the recommendations of the waterproofing membrane manufacturer.

The texturing of concrete wearing surfaces shall be applied as approved by the Resident. The surface tolerance and texture shall be acceptable to the Resident, or the placement may be suspended until remedial action has been taken. The Resident may order the removal and replacement of material damaged by rainfall.

On all concrete wearing surfaces, a one foot wide margin shall be finished adjacent to curbs and permanent barriers with a magnesium float.

Immediately after screeding, floating and texturing, the surface of the concrete shall be tested for trueness, by the Contractor, with a 10 foot straightedge and all irregularities corrected at once in order to provide a final surface within the tolerance required in Table 5. The surface shall be checked both transversely and longitudinally. Any area that requires finishing to correct surface irregularities shall be retextured.

The straightedges shall be furnished and maintained by the Contractor. They shall be fitted with a handle and all parts shall be made of aluminum or other lightweight metal. The straightedges shall be made available for use by the Resident when requested.

In the event of a delay during a concrete placement, all concrete that cannot receive the final curing cover shall be covered with wet burlap.

No vehicles will be allowed, either directly or indirectly, on reinforcing steel before concrete placement.

C. Curb and Sidewalk Finish on Bridges - Curb and sidewalk finish is a float finish produced by using a short float moved in small circles to produce a shell-like pattern on the surface of the concrete. Alternately, sidewalks may receive a light broom finish perpendicular to the sidewalk.

When a concrete curb is monolithic with a sidewalk, a six inch wide smooth margin shall be made along the top of the curb with a magnesium float.

Unless shown on the Plans, the sidewalk area shall not be divided into sections by transverse grooves.

At all transverse construction and expansion joints, except where steel expansion dams are used, the edges of the joints, on the surface of the sidewalk, shall be finished with a sidewalk edging tool two inches in width with a 1/4 inch radius lip.

D. Form Surface Finish - The character of the materials used and the care with which forms are constructed and concrete placed shall be considered in determining the amount of rubbing required. If using first class form material, well-constructed forms and the exercise of special care, concrete surfaces are obtained that are satisfactory to the Resident, the Contractor may be relieved in part from the requirement of rubbing.

1. Ordinary Finish - An Ordinary Finish is defined as the finish left on a surface after the removal of the forms, the filling of all holes and the repairing of all defects. The surface shall be true and even, free from stone pockets and depressions or projections and of uniform texture. All formed concrete surfaces shall be given an ordinary finish unless otherwise specified.

   Repaired areas that do not meet the above requirements or areas that cannot be satisfactorily repaired to meet the requirements for ordinary finish shall be given a

rubbed finish. When a rubbed finish is required on any part of a surface, the entire surface shall be given a rubbed finish.

2. Rubbed Finish - Rubbing of the concrete shall occur within seven days of the concrete placement. If rubbing of the concrete is not complete within seven days, the Contractor must apply a latex bonding agent to the concrete as submitted and approved by the Resident.

   The concrete shall be thoroughly saturated with water immediately before starting this work. Sufficient time shall have elapsed before wetting-down to allow the mortar used in ordinary finish to become thoroughly set. Surfaces to be finished shall be rubbed with a medium coarse carborundum stone, using a small amount of mortar on its face. The mortar shall be composed of cement and fine sand mixed in proportions as used in the concrete being finished. Rubbing shall be continued until all form marks, projections and irregularities have been removed, all voids filled and a uniform surface has been obtained. A thin layer of paste produced by this rubbing shall be left on the surfaces.

   After all concrete above the surface being treated has been cast, the final finish shall be obtained by a second rubbing with a fine carborundum stone using only water. This rubbing shall be continued until the entire surface is of a smooth texture and uniform color.

   After the final rubbing is completed and the surface has dried, it shall be rubbed lightly with clean and dry burlap to remove excess loose powder and shall be left free from all unsound patches, paste, powder and objectionable marks. This finish shall result in a surface of smooth texture and uniform color.

   No surface finishing shall be done in freezing weather or when the concrete contains frost. In cold weather the preliminary rubbing necessary to remove the inert sand and cement materials and the surface irregularities may be done without the application of water to the concrete surfaces.

The following portions of concrete roadway grade separation structures shall be given a rubbed finish unless otherwise indicated in the Contract:

(a) Retaining walls and the breast and wing walls of abutments - face surfaces to 12 inches below the finished ground line.
(b) Piers - all vertical surfaces and the underside of overhanging portions of caps, except that for overpass structures, the piers beyond the outside limits of the roadway pavement, the vertical surfaces on the back which are not visible from the roadway or sidewalk will not require a rubbed finish.
(c) Parapets and end posts – all horizontal and face surfaces, excluding overhead surfaces, to 12 inches below the finish ground.

If, in the opinion of the Resident, the general appearance of a concrete structure, due to the excellence of workmanship, cannot be improved by a rubbed finish, this requirement may be waived.

E. Surface Finish - After the concrete has cured, the surface shall be tested with a 10 foot straightedge or a lightweight profiler.

The straightedge shall be furnished and maintained by the Contractor. It shall be fitted with a handle and all parts shall be made of aluminum or other lightweight metal. The straightedges shall be made available for use by the Resident when requested. The lightweight profiler will be furnished by the Authority.

Areas found to not comply with the tolerance of Table 5 shall be brought into conformity by methods proposed by the Contractor and approved by the Resident at no additional cost to the Authority.

TABLE 5
SURFACE TOLERANCE LIMITS

Type of Surface:	* Maximum deviation of surface in millimeters [in.] below 3 m [10 ft.] straightedge
Concrete Wearing Surface, Curbs, Sidewalks, and Barriers	3 mm [1/8 in.]
Concrete Slab Surfaces to be Covered by Membrane Waterproofing or Concrete Wearing Surfaces	6 mm [1/4 in]
Concrete Slab Surfaces with Integral Concrete Wearing Surface	6 mm [1/4 in.]
Concrete Slab Surfaces to be Covered By Earth or Gravel	10 mm [3/8 in.]
Concrete Surface of Box Culvert Bottom Slab	10 mm [3/8 in.]
Concrete Surface of Abutments, Piers, Pier Shafts, Footings, and Walls	10 mm [3/8 in.]

* Allowance shall be made for crown, camber and vertical curve.

502.15 Curing Concrete

All concrete surfaces shall be kept wet with clean, fresh water for a curing period of at least seven days after concrete placing, with the exception of vertical surfaces as provided for in Subsection 501.10(D), Removal of Forms and False Work.

For concrete wearing surfaces and all concrete containing fly ash or slag, the temperature of the concrete shall be kept above 50˚F for the entire seven day period. All other concrete and its surfaces shall be kept above 50˚F for the first four days of the curing period and above 32˚F for the remainder of the period.

In the 24-hours following the end of the curing period, the temperature of the concrete shall be decreased on a gradual basis, not to exceed a total change of 40˚F for moderate sections, such as abutments and pier bents, and 30˚F for mass sections such as massive piers.

All slabs and wearing surfaces shall be water cured only and kept continuously wet for the entire curing period by covering with one of the following systems:

A. Two (2) layers of wet burlap;

B. Two (2) layers of wet cotton mats;

C. One (1) layer of wet burlap and either a polyethylene sheet or a polyethylene coated burlap blanket; or,

D. One (1) layer of wet cotton mats and either a polyethylene sheet or a polyethylene coated burlap blanket.

Except as otherwise specified, curing protection for slabs and wearing surfaces shall be applied within 30 minutes after the concrete is screeded and before the surface of the concrete has lost its surface "wetness" or "sheen" appearance. The first layer of either the burlap or the cotton mats shall be wet and shall be applied as soon as it is possible. Polyethylene sheets shall not be placed directly on the concrete, but may be placed over the fabric cover to prevent drying.

The covering of concrete wearing surfaces, decks, curbs and sidewalks shall be kept continuously wet for the entire curing period by the use of a continuous wetting system and shall be located to insure a completely wet concrete surface for the entire curing period.

All other surfaces, if not protected by forms, shall be kept thoroughly wet either by sprinkling or by the use of wet burlap, cotton mats or other suitable fabric until the end of the curing period, except as provided for in 502.10(D), Removal of Forms and False Work. Polyethylene sheets shall not be placed directly on the concrete, but may be placed over the fabric cover to prevent drying.

Surfaces of all concrete placements containing silica fume additive shall be coated with an approved evaporation retardant immediately after finishing and texturing the concrete surface. The application of wet burlap or wet cotton mats shall be made within 15 minutes after the finishing of the concrete surface.

The application rate, the desired equipment, and the mixing and application procedures for an approved evaporation retardant shall be as designated by the manufacturer. Successive applications or heavier applications of this evaporation retardant shall be applied as necessary to retain the required surface "wetness" appearance.

502.16 Loading Structures and Opening to Traffic

No superstructure concentrated loads such as structural steel beams, girders and trusses shall be placed upon finished concrete substructures until the concrete has reached its design strength.

No load or work will be permitted on concrete superstructure slabs or rigid frame structures until concrete cylinders cured with the slab establish that design strength has been reached. However, after a shorter period of time, the Resident may permit handwork for form construction and setting stone bridge curb. No curbing or other materials shall be stored on the bridge during the seven day curing period, except that if handwork is permitted, curb stones may be stored in a line near to their final location until ready to be set.

Neither traffic nor fill material shall be allowed on superstructures of concrete bridges or culverts until concrete cylinders cured with the slab establish that design strength has been reached, dependent upon conditions as specified in Subsection 502.10 and with the approval of the Resident.

No traffic will be allowed on the cured concrete of a concrete wearing surface until 24-hours after the completion of the application of protective coating for concrete surfaces.

Concrete approach slabs at the end of structures may be opened to traffic or backfilled if buried when the design strength has been reached.

502.17 Bridge Drains and Incidental Drainage

All drains shall be accurately placed at the locations shown on the Plans or as approved by the Resident, and an adequate means provided for securely holding them in the required positions during the placing of concrete.

Bridge drains shall be galvanized in accordance with Subsection 711.04, Bridge Drains. The Contractor shall furnish an insulator between surfaces of galvanized and weathering steels when erecting the bridge drain support assembly. Epoxy-coated washers shall be used when the support assembly attaches to weathering steel beam webs.

Drains or weep holes through abutments and retaining walls shall be pipe of the size and shape shown on the Plans and shall be of Schedule 40 PVC pipe.

For the purpose of providing drainage for any moisture that may collect between the floor slab and the bituminous concrete roadway surface, approved one inch inside diameter plastic tube drains shall be installed at the low points of the slab surface, adjacent to the end dam or dams. The exact location will be determined in the field by the Resident and the discharge from them shall be such as to clear the bridge seats and any other portion of the structure in their proximity. The tops of the drains shall be depressed 3/8 inch below the surface of the slab and the outlets shall project two inches below the underside of the slab. Care shall be exercised such that the drains are open after the installation of the membrane waterproofing, when it is installed.

502.175 Miscellaneous Construction of Conduits and Anchor Bolts

All conduit materials and installation procedures shall follow the requirements of Section 626.03 through 626.033 of the MaineDOT Standard Specifications.

Before placing concrete, the required elbows of entrance conduits, reinforcement, and anchor bolts shall be carefully positioned. The anchor bolt size and the bolt circle diameter shall be determined from data furnished by the supplier of the poles or as shown on the Plans. Anchor bolts for use with breakaway couplings, longitudinally grooved-type, shall be 1 inch diameter and shall project between 2-1/2 and 3 inches above the top of the foundation. All other anchor bolts shall be a minimum of one inch diameter and shall project sufficiently to accommodate the thickness of the base plus all nuts and washers. The bolt length shall also be sufficient to allow clearances of approximately 1/2 inch below the leveling nut and 1/4 inch above the top nut. At least two threads on each anchor bolt shall project beyond the outside of the nuts holding the plumbed pole.

When the anchor bolt template is removed, the threads of the anchor bolts shall be greased and protected with a metal sleeve, held in position with nuts and washers to be furnished with the bolts. This thread protection shall remain in place until the pole or other equipment is installed.

A copper-clad steel ground rod shall be installed when shown on the Plans.

502.18 Method of Measurement

Structural concrete satisfactorily placed and accepted will be measured by the cubic yard, in accordance with the dimensions shown on the Plans or authorized changes in the Plans.

Structural Concrete for any irregular shapes may be measured by the cubic yard as determined from the theoretical yield of the design mix or in the case of transit mixed concrete, by delivery ticket as approved by the Resident.

The limits to be used in determining the quantities of the aforementioned structural concrete items will be as follows:

1. Structural Concrete, Space Frame Pedestals. The limits will be the space frame pedestals from the top of the drilled shafts to the top of the pedestal (match barrier elevation).
2. Structural Concrete, Grade Beams and ORT Slabs. The limits will be the entire ORT slab bounded transversely and longitudinally by the extreme ends including grade beams.
3. Structural Concrete, Pavement Slabs The limits will be the entire ORT slab bounded transversely and longitudinally by the extreme ends or edges of existing concrete.

4. Structural Concrete, Plaza Island. The limits will be the entire concrete island, outside to outside, both transversely and longitudinally, exclusive of curbing and space frame pedestals.

5. Structural Concrete Slab Infill. The limits will be the cut regions of for the conduit penetrations into the tunnel.

6. Structural Concrete Departure Slab. The limits will be the entire concrete slab bounded transversely and longitudinally by the extreme ends or edges of existing concrete.

No deduction will be made for the volume of concrete displaced by structural steel, reinforcing steel, pile heads, expansion joint material, drains, chamfers on corners, inset panels of 1-1/2 inches or less in depth, pipes, weep holes and authorized openings for utilities of 1/4 yd^3 or less in volume, when any of these items occur in structural concrete which is to be paid for on a cubic yard basis.

502.19 Basis of Payment

The accepted work done under structural concrete, of the classes and for the types of work required, will be paid for at the Contract unit price per cubic yard for the respective Contract items involved. Payment for miscellaneous construction items such as asphalt for painting or covering various types of joints, all required sandblasting, bonding, curing, joint sealing, and joint sawing shall be incidental to the respective 502 pay items. No direct payment will be made for concrete admixtures with the exception of Synthetic Fiber Reinforcement, which shall be paid for under its respective Pay Item, 503.90.

Steel reinforcing and GFRP reinforcing will be measured and paid for separately as outlined in Section 503.

The procurement and installation of the electric conduit and anchorages placed within the Space Frame Pedestals will not be measured separately for payment, but shall be incidental to the Structural Concrete, Space Frame Pedestal pay item.

Implementation of the Quality Control Requirements and costs associated with acceptance test sampling shall be incidental to relative pay item.

Payment will be made under:

Pay Item		Pay Unit
502.231	Structural Concrete, Space Frame Pedestals	Cubic Yard
502.261	Structural Concrete, Grade Beams and ORT Slabs	Cubic Yard
502.262	Structural Concrete, Pavement Slabs	Cubic Yard
502.263	Structural Concrete, Plaza Islands and Slab Infill Concrete	Cubic Yard
502.264	Structural Concrete, Departure Slab	Cubic Yard

SPECIAL PROVISION

SECTION 503

REINFORCING STEEL

(GFRP Reinforcing)

503.01 Description

The first paragraph is amended to read:

This work shall consist of fabrication, delivery and placing glass fiber reinforced polymer (GFRP) reinforcement in accordance with these Specifications and in conformance with the Plans, General Provisions and Special Provisions.

503.02 Materials

The following paragraphs are added:

Materials shall meet the following requirements:

All GFRP reinforcement shall conform to the requirements shown in AASHTO Bridge Design Guide Specifications for GFRP - Reinforced Concrete Bridge Decks and Traffic Railings (November 2009), except as shown on the Plans, and as stated herein. All GFRP reinforcement bar shall be deformed or sand coated.

GFRP bars shall be from one of the following approved manufacturers:

1. Aslan 100 by Hughes Brothers Inc.
2. V-Rod by Pultrall Inc.
3. ComBAR by Schoeck Bauteile.
4. Mateen-Bar by Sigma Development Group, LLC.

All GFRP bars in the same structural component shall be supplied by the same manufacturer.

Documentation

For all GFRP reinforcement bar used on Authority projects, the bar manufacturer shall furnish the Resident with one hardcopy and one electronic copy of written certifications that the GFRP reinforcement meets the requirements of this specification. In addition, the certification shall list the test values and test procedures used to determine the physical properties of the GFRP reinforcement. Certifications bearing the notarized signature of a responsible authorized representative of the bar manufacturer are required. Each bundle of

GFRP reinforcement shall be identified with a corresponding lot number with the lot numbers affixed to each bundle by means of a durable tag.

Repair Material

The material used to repair the cut ends of GFRP reinforcement shall comply with the requirements established by the bar manufacturer.

503.04 Protection of Material

The following paragraphs are added:

Delivery, storage and handling of GFRP reinforcing bars shall be in accordance with these Specifications. Prevent bending, coating with earth, oil, or other material, or otherwise damaging the reinforcement. When handling reinforcement, use equipment to avoid damaging or abrading the bar. Do not drop or drag reinforcement.

GFRP reinforcement shall be stored on skids or other supports a minimum of 12 inches above the ground surface and protected at all times from damage and surface contamination. The storage supports shall be constructed of wood, or other material that will not damage the surface of the reinforcement. Bundles of bars shall be stored on supports in a single layer. Each bundle shall be placed on the supports out of contact with adjacent bundles. Reinforcing bars expected to be stored outdoors for a period in excess of two months, shall be protected from ultraviolet radiation. Prevent exposure of reinforcing to temperatures above 120 degrees Fahrenheit during storage.

All handling of reinforcing bars by mechanical means shall be done by equipment having padded contact areas, or by the use of nylon webbing slings. The use of chains or wire rope slings shall not be allowed, even when used with padding. All bundles of bars shall be lifted with a strong back, spreader bar, multiple supports or a platform bridge to prevent bar-to-bar abrasion from sags in the bundles. Support points during lifting or transporting of bundled reinforcing bars shall be spaced at a maximum of 15 feet, or as required by the manufacturer, whichever is more restrictive.

Bundled bars shall be strapped together with non-metallic or padded straps in a manner to prevent bar-to-bar abrasion due to relative movement between bars.

Bars loaded for transport shall be loaded and strapped down in a manner that will prevent damage from motion and vibration, to the greatest extent possible. Bundles of bent bars shall be transported strapped to wooden platforms or shall be crated. All individual bundles and layers of bundles shall be separated, and supported by dunnage.

Individual bars shall be handled in a manner that prevents damage due to abrasion or impact, and at no time shall any bar be moved by dragging over any surface, including other reinforcing bars. Sufficient personnel shall be assigned to assure compliance with the above.

For GFRP bars the maximum total visible damage permitted on each linear foot shall not exceed two percent of the surface area in that linear foot of bar. The depth of the permissible damage shall not exceed 0.04 inches.

503.06 Placing and Fastening

The following paragraphs are added:

All reinforcement shall be accurately placed in the positions shown on the Plans and shall be firmly held there during the placing and setting of the concrete. Immediately before placing concrete the reinforcement shall be free from all foreign material which could decrease the bond between the reinforcing and concrete. Such foreign material shall include, but not be limited to: dirt, paint, oil, bitumen and dried concrete mortar.

Reinforcing bars within the formwork shall be secured to prevent movement during concrete placement. The bars must be adequately supported or tied to resist settlement, floating upward, or movement in any direction during concrete placement.

Field bending of GFRP shall not be allowed.

Field cutting of GFRP will be permitted only with the approval of the Resident. The field cutting shall be with a high speed cutter, fine blade saw, diamond blade or masonry saw. The GFRP bars shall not be shear cut.

Proper distances from the forms shall be maintained by means of stays, blocks, ties, hangers or other approved means. Blocks used for this purpose shall be precast Portland cement mortar blocks of approved shape and dimensions. Chairs may be used for this purpose and, when used, must be GFRP or plastic. The use of pebbles, pieces of broken stone or brick, metal pipe or wooden blocks shall not be permitted. The placing of reinforcement as concrete placement progresses, without definite and secure means of holding the bar in its correct position, shall not be permitted. Reinforcing bars used as support bars and spreader bars shall be the same type used for the main reinforcing.

Bars shall be fastened together at all intersections except where spacing is less than one foot in either direction, in which case, fastening at alternate intersections of each bar with other bars will be permitted providing this will hold all the bars securely in position. This fastening may be plastic or nylon ties only.

Minimum embedment lengths of reinforcing bars shall comply with the manufacturers published recommendations for the anchoring material selected. These embedment lengths shall be verified by the Resident before installation of the reinforcing bars. The reinforcing bar lengths indicated on the Plans may be reduced, at the Contractor's option, to the determined minimum embedment lengths.

Reinforcement shall be inspected and approved by the Resident before any concrete is placed.

503.07 Splicing

The following sentence is added:

Lap splice length for GFRP bars shall be as per manufacture's recommendation.

503.10 Method of Measurement

The first sentence of the first paragraph is amended as follows:

GFRP reinforcing bars shall be measured by the computed number of pounds of reinforcement authorized.

GFRP reinforcing bars placed within drilled shafts shall be included in the respective 626 pay items.

503.11 Basis of Payment

The following is added:

The accepted quantity of GFRP reinforcing will be paid for at the Contract unit price per pound for each item involved, completed, and accepted.

Pay Item		Pay Unit
503.18	Glass Fiber Reinforced Polymer (GFRP) Reinforcing Bars, Fabricated and Delivered	Pound
503.19	Glass Fiber Reinforced Polymer (GFRP) Reinforcing Bars, Placing	Pound

SPECIAL PROVISION

SECTION 503

REINFORCING STEEL

(Synthetic Fiber Reinforcement)

The following Subsection shall be added:

503.01 Description

This work shall consist of furnishing synthetic fiber reinforcement to be used as temperature and shrinkage reinforcement in the structural concrete pavement slabs and ORT slabs.

503.02 Materials

The following sentence shall be added:

Synthetic fibers shall be STRUX 90/40 as manufactured by W. R. Grace & Co. or an approved equal.

The following Subsection shall be added:

503.03 Dosage

The dosage rate for synthetic fibers shall be five lbs per cubic yard of concrete.

503.10 Method of Measurement

The following sentence shall be added:

Synthetic fiber reinforcement will be measured by the pound.

503.11 Basis of Payment

Payment will be made under:

Pay Item		Pay Unit
503.90	Synthetic Fiber Reinforcement	Pound

SPECIAL PROVISION

SECTION 504

STRUCTURAL STEEL

(Space Frame Canopy, Fabricated and Delivered)
(Space Frame Canopy, Erection)
(Steel Post Support System)

504.01 Description

The following paragraphs are added:

This work shall also consist of designing, fabricating and erecting a space frame canopy in accordance with the Plans, these Specifications, and as directed by the Engineer. The Contractor shall have the option to fabricate the space frame canopy from galvanized steel or aluminum.

This work shall also consist of fabricating and erecting a steel support post system to support the space frame canopy in accordance with the Plans, these Specifications, and as directed by the Engineer. The steel support post system shall be fabricated from galvanized steel.

The space frame shall be designed, fabricated and manufactured by one of the following companies, or an approved equal:

- Delta Structures, Inc., 811 Eagle Drive, Bensenville, IL 60106
- Novum Structures, LLC, W126 N8585 Westbrook Crossing, Menomonee Falls, WI 53051
- Gossamer Space Frames, 5622 Research Drive, Ste. B, Huntington Beach, CA 92649

Design of the space frame canopy and steel post support system shall be in accordance with the Plans, these Specifications, and the AASHTO Standard Specifications for Structural Supports for Highway Signs, Luminaries, and Traffic Signals, 5th Edition, with 2010 and 2011 Interims.

Fabrication of the space frame canopy and steel post support system shall be completed in accordance with Standard Specification Subsections 504.14 through 504.39 with modifications included in this Specification.

Erection of the space frame canopy and steel post support system shall be completed in accordance with Standard Specification Subsections 504.40 through 504.56.

504.02 Materials

The following paragraphs are added:

The space frame canopy and steel post support system shall be fabricated from the following:

- Structural steel plates and shapes shall be ASTM A572, Grade 50 and shall meet the requirements of AWS D1.1, Section 4, Part D for CVN testing.
- Aluminum extrusions shall conform to 6061-T6.
- Pipes for use in the space frame canopy shall conform to one of the following:
  - ASTM A500, Grade B (Fy = 46 ksi) (minimum)
  - 6061-T6 Aluminum

Anchor rods shall conform to ASTM F1554, Grade 105.

Nuts, washers, and anchor rods shall be hot dip galvanized. Bolts and anchor rods shall be furnished with double nuts and washers. Threaded length shall be in accordance with the details shown.

Galvanized components, including fasteners, used in the space frame canopy and support post system that are in contact with aluminum elements shall be stainless steel; or provisions shall be made to isolate galvanized components from direct contact with aluminum parts using stainless steel sheet metal separators or Teflon pads.

Materials not specifically covered in the Plans and Specifications shall be in accordance with the AASHTO Standard Specifications for Structural Supports for Highway Signs, Luminaries, and Traffic Signals, 5th Edition, with 2010 and 2011 Interims, and shall be subject to approval by the Engineer.

504.03 Drawings

The first sentence of the first paragraph is deleted and replaced with the following:

The Contractor shall submit design computations, fabrication drawings, erection plans and other necessary working drawings in accordance with Subsection 105.07, Working Drawings.

504.06 Inspection

The second paragraph is deleted and replaced with the following:

Quality Control and all testing of welds shall be certified by a qualified laboratory engaged by the Contractor and approved by the Engineer. The Contractor shall forward the certifications to the Engineer and shall pay for all costs of weld inspection and certification as herein specified.

The Engineer reserves the right to inspect, by nondestructive testing techniques, all welds and adjacent base metal as deemed warranted. All such additional testing shall be paid for by the Authority.

504.14 Materials for Bridges

This Subsection is deleted and replaced with the following:

The space frame canopy and steel post support system shall be fabricated from one of the following pipe or tubular materials:

- High-strength low alloy steel pipe of the nominal diameter and schedule shown on the Plans, or equal, subject to the approval of the Engineer.
- Aluminum pipes and extrusions conforming to 6061-T6.

504.15 Design

This Subsection is deleted and replaced with the following:

Design, detail and load requirements shall conform to the AASHTO Standard Specifications for Structural Supports for Highway Signs, Luminaries, and Traffic Signals, 5th Edition, with 2010 and 2011 Interims, and shall be subject to approval by the Engineer.

504.16 Fabrication

This Subsection is deleted and replaced with the following:

Fabrication shall be in accordance with *ANSI/AASHTO/AWS D1.1 Structural Welding Code* (the D1.1 Code) as modified herein, and these Specifications.

Ends of sections shall be cut true and smooth, free from burrs and ragged breaks. Open ends of tubular sections shall be capped. Drain holes shall be provided where required and as noted on the Plans.

End connections for the space frame canopy chords to the nodal points shall be bolted. No welding shall be used for the field assembly of the space frame canopy. Crimped end connections for tubular members shall not be used in the space frame canopy structure.

Material shall be handled in a manner that prevents nicks, gouges or other damage from chains, wire ropes or other handling devices during all phases of construction.

All surfaces of the completed steel support post system shall be finished with a galvanized coating. The support post system components shall be fabricated in complete units as shown on the Plans, so as to provide for ease of handling in pickling and galvanizing tanks so that galvanizing may be done on the fabricated section. Any repair of zinc coatings damaged by handling and erection shall be kept to a minimum. Damaged galvanized coatings shall be repaired in accordance with ASTM A780.

Aluminum material 1/2 inch thick or less may be cut by shearing, sawing, or milling. Material over 1/2 inch thick shall be sawed or milled. Cut edges shall be true and smooth and free from excessive burrs or ragged breaks. Reentrant cuts shall be filleted by drilling prior to cutting. Flame cutting will not be permitted. No welding of aluminum shall be permitted.

504.30 Welded Fabrication

The following paragraphs are added:

All welding shall be done in the shop by the inert gas shielded arc method. The procedures, techniques, standards of acceptance, inspection and methods of repair for all welded joints shall be in accordance with AWS D1.1. Any defects detected shall be corrected by removing and replacing the entire weld.

All welds shall meet the "quality of welds" requirements specified in the sections on "Design of New Bridges" and "Tubular Structures" of the structural welding code. All welds not meeting these quality requirements shall be repaired and/or replaced by the Contractor to meet these requirements and check tests, without additional cost to the Authority.

Welds shall be tested using the magnetic particle inspection procedure in accordance as follows:

- 100 percent of the welds securing the support post columns to their base plates.
- No less than 25 percent of all other welds within the completed structure.

Transverse butt welds shall be tested throughout their entire length using radiographic inspection procedures. Longitudinal seam welds shall be tested throughout their entire length using ultrasonic inspection procedures.

504.41 Methods and Equipment

This Subsection is deleted and replaced with the following:

The erection of the space frame canopy shall be in accordance with the space frame canopy Manufacturer’s recommendations, as approved by the Engineer, and with these Specifications. A manufacturer’s representative of the space frame canopy shall be onsite to supervise the assembly and erection of the space frame canopy.

After the support posts for the canopy have been placed over the anchor bolts onto the leveling nuts, the nuts shall be adjusted until the support posts are truly vertical. The upper nuts shall then be tightened and the space between the concrete base and the underside of the base plate shall be completely filled with non-shrink grout. Following placement of the grout, exposed surfaces of the grout and concrete shall be kept moist for at least 72-hours by means of wet burlap or fabric mats.

Under no circumstances shall the space frame canopy be erected before the expiration of the curing period for the grouted portion of all pedestals.

Attention is directed to Special Provision Section 652 regarding maintenance and protection of traffic during work adjacent to, or over active roadways. Work adjacent to, or over active roadways will not be permitted unless appropriate traffic control measures are in place and have been approved by the Resident.

504.641 Method of Measurement

The following Subsection is added:

Fabrication and delivery of the accepted space frame canopys will be measured as one lump sum.

Erection of the space frame canopys will be measured as one lump sum.

The steel post support system will be measured as one lump sum, satisfactorily fabricated, delivered and erected.

Any temporary false work or support systems required for the erection process will not be measured for payment separately, but shall be considered incidental to the related Contract items.

504.65 Basis of Payment

This Subsection is deleted and replaced with the following:

The space frame canopy and steel post support system will be paid for at the Contract Lump Sum price for the respective pay items. Payment will be full compensation for all materials, fabrication, inspection, testing, installation, false work, equipment, labor and incidentals necessary to fabricate, deliver, and erecting the space frame canopy and support system.

Payment will be made under:

Pay Item		Pay Unit
504.80	Space Frame Canopy, Fabricated and Delivered	Lump Sum
504.81	Space Frame Canopy, Erection	Lump Sum
504.90	Steel Post Support System	Lump Sum

SPECIAL PROVISION

SECTION 504

STRUCTURAL STEEL

(Mounting Bracket Assemblies)

504.01 Description

The following paragraphs are added:

This work shall consist of fabricating and erecting Mounting Bracket Assemblies for the support of overhead signs as shown on the Plans and ORT equipment to be furnished and mounted by others in accordance with the Plans and as directed by the Engineer.

Fabrication and Erection of the Mounting Bracket Assemblies shall be completed in accordance with Subsections 504.01 through 504.13 and with Subsections 504.57 through 504.64.

504.02 Materials

The following paragraphs are added:

The Mounting Bracket Assemblies shall be constructed of hot dip galvanized Unistrut Brand materials, manufactured by Unistrut Corporation, or an approved equal.

Nuts, washers, and all miscellaneous hardware, unless otherwise noted, shall be stainless steel conforming to ASTM A276. All bolts shall be furnished with nuts and lock washers.

Any components of the Mounting Bracket Assemblies that are in contact with aluminum elements shall be stainless steel; or provisions shall be made to isolate galvanized components from direct contact with aluminum parts using stainless steel sheet metal separators or Teflon pads.

Materials not specifically covered in the Plans and Specifications shall be in accordance with the AASHTO Standard Specifications for Structural Supports for Highway Signs, Luminaries, and Traffic Signals, 5th edition, with 2010 and 2011 Interims, and shall be subject to approval by the Engineer.

504.03 Drawings

The first sentence of the first paragraph is deleted and replaced with the following:

The Contractor shall submit design computations, fabrication drawings, erection plans, and other necessary working drawings in accordance with Subsection 105.07, Working Drawings.

504.16 Fabrication

This Subsection is deleted and replaced with the following:

Ends of sections shall be cut true and smooth, free from burrs and ragged breaks. Material shall be handled in a manner that prevents nicks, gouges or other damage from chains, wire ropes or other handling devices during all phases of fabrication.

All connections between the mounting bracket assemblies and the supporting space frame shall be bolted. No welding will be permitted for field assembly or erection of the mounting bracket assemblies.

All surfaces of the completed mounting bracket assemblies shall be hot dip galvanized. Any repair of zinc coatings damaged by handling and erection shall be kept to a minimum. Damaged galvanized coatings shall be repaired in accordance with ASTM A780.

504.41 Methods and Equipment

This Subsection is deleted and replaced with the following:

The erection of the mounting bracket assemblies shall be in accordance with the Plans, as approved by the Engineer, and with these Specifications.

Attention is directed to Special Provision Section 652 regarding maintenance and protection of traffic during work adjacent to, or over active roadways. Work adjacent to, or over active roadways will not be permitted unless appropriate traffic control measures are in place and have been approved by the Resident.

504.641 Method of Measurement

The following Subsection is added:

The specified quantity of Mounting Bracket Assemblies will be measured as one lump sum, satisfactorily fabricated, installed and accepted by the Resident.

504.65 Basis of Payment

This Subsection is deleted and replaced with the following:

Mounting Bracket Assemblies will be paid for at the Contract Lump Sum price for the respective pay items. Payment will be full compensation for all materials, fabrication,

installation, equipment, labor and incidentals necessary for furnishing and erecting the Mounting Bracket Assemblies.

Payment will be made under:

Pay Item		Pay Unit
504.91	Mounting Bracket Assemblies	Lump Sum

SPECIAL PROVISION

SECTION 506

FIELD COATING APPLICATION

506.01 Description

This Specification covers the field cleaning and painting of the existing West Gardiner Toll Plaza Canopy Support Columns. The following areas are required to be cleaned and painted:

All remaining canopy support columns (eight total) with a cleanliness level of SSPC-SP 2. All remaining canopy support column areas of corrosion, deteriorated paint, and other detrimental foreign matter to an SSPC-SP 3 condition.

The work shall consist of furnishing all supervisory personnel, competent person(s), labor, tools, equipment, containment, scaffolding, protection of public and private property, Quality Control activities, materials, and incidentals necessary for satisfactory completion of the work.

If applicable, all lead abatement requirements shall be in compliance with current Local, State, and Federal regulations, the requirements of Subsection 105.2.4.2, Lead Paint, Special Provisions 506.08(E), Hazardous Waste Management Plan, 506.7,0 Containment System and Disposal of Hazardous Materials, and 506.80, Lead Health Protection.

Appendix B - Lead Paint Assessment, is included in this Contract for informational purposes.

In reference to surface preparation, cleanliness, coating application, containment measures, and hazardous waste management, the Contractor shall have the latest copies of the following reference on-site at all times:

1. Steel Structures Painting Council's Steel Structures Painting Manual, Volumes 1 and 2 (Good Painting Practice and Systems and Specifications).
2. SSPC-VIS 3, Visual Standard for Power and Hand-Tool Cleaned Steel.
3. SSPC Guide 6, Guide for Containing Surface Preparation Debris Generated During Paint Removal Operations.
4. SSPC Guide 7, Guide to the Disposal of Lead-Contaminated Surface Preparation Debris.
5. Maine Department of Environmental Protection's "Hazardous Waste Management Rules".
6. Maine Department of Environmental Protection – Handbook for Hazardous Waste Generators.
7. OSHA 29 CFR Part 1910 "Occupational Safety and Health Standards" and Part 1926 "Safety and Health Regulations for Construction".

8. OSHA 40 CFR Part 264 “Hazardous Waste Contingency Plan”.
9. OSHA 42 CFR Part 84 “Respiratory Protective Devices”.

All surface preparation, containment, and field painting included in the Contract shall be sequenced to accommodate maintenance of traffic in accordance with Section 652, Maintenance of Traffic, Subsection 107.4.7, Limitations of Operations, and as shown in the Maintenance of Traffic Plans.

506.02 Materials

Materials shall comply with the requirements of the respective Subsections of this Specification.

506.03 Submittals

Contractor shall submit the following for review to the Resident:

- Contractor’s Certifications
- Quality Control Plan
- Surface Preparation / Painting Plan
- Material Safety Data Sheets
- Containment Plan
- Hazardous Waste Management Plan
- Environmental Protection Plan
- Health and Safety Plan
- SPCC Plan
- Finish coat color sample per 506.21 Materials
- All other documentation as specified herein

506.05 Inspection

For the purpose of this Specification, the following definitions shall apply:

Quality Assurance Inspector (Q.A.I.): The Authority’s authorized representative for field inspection.

Quality Control Inspector (Q.C.I.): The Contractor’s authorized representative for field surface preparation and application.

Quality Control (Q.C.) is the responsibility of the Contractor. The Q.C.I. shall inspect all aspects of the work and shall supervise required testing. The Q.C.I. shall record measurements and test results in a Job Control Record (JCR). The Q.C.I. shall reject materials and workmanship that do not meet Contract requirements. The results of all testing shall be documented and a copy made available to the Q.A.I. on a daily basis or as requested by the Resident or Q.A.I.

The JCR shall include the following typical testing requirements, as applicable:

- Surface Preparation Cleanliness and Anchor Profile - before application of the first or primer coat.
- Environmental conditions - Ambient temperature, surface temperature, relative humidity, and dew point prior to the application of each coat and at the conclusion of final coating application of the work shift.
- Dry Film Thickness (DFT) - After the coating has cured and before the application of any subsequent coating.
- Type of testing equipment, model, serial number and calibration data, if applicable.
- Type of application equipment.
- Type of containment, when required.
- Coating batch and/or lot number, date of manufacture, and shelf life.
- Manufacturer's certification of conformance.
- Name(s) of applicator(s).
- Cure data, cure times, temperature, and relative humidity.
- Final inspection by the Q.C.I. and acceptance by the Resident or Q.A.I.

Quality Assurance (Q.A.) is the prerogative of the Authority. The Q.A.I. will ensure that the Q.C. is being performed properly, verify documentation, periodically inspect workmanship, and witness testing. Q.A. testing deemed necessary by the Resident in addition to the minimum test requirements shall be scheduled to minimize interference with the production schedule.

506.06 Quality Assurance Inspector's Authority

The Q.A.I. will have the authority to reject material or workmanship that does not meet the Contract requirements. The acceptance of material or workmanship by the Q.A.I. will not preclude subsequent rejection, if materials or workmanship is found unacceptable, by other authorized representatives of the Authority.

506.07 Rejections

Rejected material or workmanship, as described above, shall be corrected or replaced by the Contractor, at no additional cost to the Authority.

506.08 Contractor Qualification

All Contractors and Subcontractors involved in the cleaning and removal of existing painted surfaces shall be certified in accordance with SSPC-QP 2 "Standard Procedure for Evaluating the Qualifications of Painting Contractors to Remove Hazardous Paint".

All Contractors and Subcontractors involved in the field application and touch-up of the steel coating system shall be certified in accordance with SSPC-QP 1 "Standard Procedure for Evaluating Qualifications of Painting Contractors: Field Application to Complex Structures".

All Contractor and Subcontractor SSPC certifications specified above shall be current and in-place prior to bid opening. The Contractor shall ensure that all required SSPC

certifications are kept current throughout the duration of the Contract until final acceptance of the work. A copy of valid current certifications shall be transmitted with the Bid Package.

A) Quality Control Personnel Qualifications:

The Contractor's Quality Control personnel shall have successfully completed the National Association of Corrosion Engineers (NACE) Coating Inspector Program (CIP) Level 1, 2 and 3 – Peer Review training, with certifications in current standing, or shall provide evidence of successful inspection of three projects of similar size and scope that have been completed in the last two years. References shall include the name, address, and telephone number of a contact person employed by the bridge owner. The personnel performing the Quality Control tests shall be trained in the use of the Quality Control instruments. Documentation of training shall be provided to the Resident.

If the Quality Control personnel the Contractor engages for the Project does not follow and enforce the approved Quality Control Plan, the Resident may require the Contractor to retain the services of an independent, third party certified NACE inspector for the remainder of the Project, at no additional cost to the Authority.

B) Quality Control Plan:

The Contractor shall submit a Quality Control Plan (QCP) to the Resident for review a minimum of 21 days prior to initiating any removal of paint from the existing toll plaza(s). The Quality Control is the responsibility of the Contractor to ensure compliance with the Contract documents. The QCP shall, at a minimum, include the names of all the Contractor's representatives on-site, who shall be responsible for the inspection, and the acceptance of the Contractor's work prior to inspection by the Resident. The plan shall also define hold points, submittals of Job Control Records, coating / DFT reports and the process for rework. Inspection by the Contractor's representative shall be incidental to the surface preparation.

The Contractor shall adhere to the approved QCP at all times. Violation of the QCP, including failure to submit daily work reports and/or coating and DFT reports, may result in a suspension of work. If suspension is ordered in writing by the Resident, work shall not resume until the Contractor provides a plan in writing, which is acceptable to the Resident, describing how compliance will be restored and maintained. A suspension resulting from the Contractor's failure to adhere to the approved QCP shall be at no additional cost to the Authority and shall not be cause for a time extension of the Contract.

C) Surface Preparation / Painting Plan:

The Contractor shall submit to the Resident for review, written procedures for the surface preparation, remediation of soluble salts, coating application, and coating touch-up/repair. This plan shall include a description of the equipment that will be

used for surface preparation and painting. This plan shall also include the surface preparation methods to be used in "sensitive areas" (e.g., "EZ-Pass" equipment, utilities, lighting fixtures, galvanized surfaces, galvanized conduit, galvanized conduit supports etc.). If any of the areas that are determined to be "sensitive" by the Resident receive damage due to any work operations, the Contractor shall be responsible for all damage at no additional cost to the Authority. The Contractor shall receive approval from the Resident before performing work adjacent any "sensitive areas".

This plan shall address methods for sequencing work to accommodate Maintenance of Traffic in accordance with Section 652, Maintenance of Traffic, Subsection 107.4.7, Limitations of Operations, and as shown in the Maintenance of Traffic Plans.

This plan shall also identify the methods of protection or work isolation procedures that will be followed to protect surrounding structures, toll equipment, utilities, and property of the Authority from exposure to surface preparation and paint debris. The Contractor is responsible for any damage caused by the surface preparation.

The Contractor shall submit the manufacturers' product data sheet(s) for the specified protective coating system in the submission to the Resident.

D) Containment and Environmental Plan:

At least two weeks prior to starting the surface preparation and/or painting of the structure, the Contractor shall submit the proposed Containment Plan to the Resident for review. The Containment Plan shall address the Contractor's proposed containment and pollution control measures for each work zone phase of the containment systems attached to the toll plaza canopy, framing members, and/or toll booths. Containment enclosures shall meet the requirements of SSPC Guide 6 Class 3P. Containment walls used to separate the lane closure work zone from the traveling public and toll plaza employees shall be fastened securely so that they do not billow more than six inches from the vertical. All interfaces between the containment and toll plaza components shall be constructed as necessary to prevent any debris from exiting the containment during cleaning operations.

As soon as the containment installation begins, the Contractor shall immediately provide full 24/7 access for emergency egress for toll plaza personnel from both sides of the operational toll booth(s), while maintaining the integrity of the containment system once installation is complete. Access configuration and functionality shall be approved by the Resident before containment installation continues.

The Contractor shall submit a plan and drawings for the installation, moving, and removal of the containment enclosure, as well as the means and methods of providing and maintaining emergency access. The Containment Plan shall address

methods for sequencing work to accommodate maintenance of traffic in accordance with Section 652 Maintenance of Traffic, Subsection 107.4.7 Limitations of Operations, and as shown in the Maintenance of Traffic Plans.

The erection of containment enclosure(s), or conducting any paint removal activities, shall not begin until the Resident has reviewed the Containment Plan and authorized the Contractor to begin work.

The Contractor is responsible for ensuring the containment meets all OSHA, Federal and State regulations.

All equipment placement and work shall be in strict conformance with Section 652, Maintenance of Traffic.

E) Hazardous Waste Management Plan:

A minimum of two weeks prior to undertaking the removal of existing coatings, the Contractor shall submit a Hazardous Waste Management Plan (EPA/DEP) to the Resident outlined below which, if applicable, shall include the requirements of Subsection 105.2.4.2, Lead Paint.

Procedures used for management and disposal of any lead paint and associated hazardous materials shall conform to the latest requirements of SSPC Guide 7 "Guide for the Disposal of Lead-Contaminated Surface Preparation Debris", and all Federal, State, and local requirements. The Contractor shall have a copy of the SSPC Guide 7 available on-site at all times. The Contractor shall also have a copy of the Maine Department of Environmental Protection's (DEP's) Handbook for Hazardous Waste Generators, and a copy of the State of Maine Hazardous Waste Management Rules, 06-096 CMR Chapters 850-857, on-site at all times.

Plans and drawings of the Hazardous Waste Management Plan shall be prepared and stamped by a Professional Engineer licensed in the State of Maine.

The Contractor shall have aid agreements with the local fire department, police department, hospital, and hazardous waste spill responder for each town. Copies of these agreements shall be provided to the Resident prior to generating any waste, in conformance with DEP Rules, Chapter 851, Section 13, Part C (7)(c)(ii) and OSHA 40 CFR Part 264.37.

See Subsections 506.70 through 506.72 for additional requirements.

G) Health and Safety Plan:

A minimum of two weeks prior to performing any work on the toll plaza(s), the Contractor shall submit to the Resident a written site-specific Health and Safety Plan. If applicable, the plan shall conform to the requirements of Subsection 105.2.4.2, Lead Paint.

Failure of the Contractor or Subcontractors to comply with the provisions for the Health and Safety Plan defined in this Specification will affect whether the Contractor or Subcontractors will be considered a responsible Contractor or Subcontractor on future work involving structure rehabilitation and removal of hazardous paint coatings on projects for the Maine Turnpike Authority.

H) Spill Prevention Control and Countermeasure Plan:

Prior to the start of construction, the Contractor shall submit a Spill Prevention Control and Countermeasure (SPCC) Plan in accordance with the requirements of Subsection 105.8.1, Temporary Soil Erosion and Water Pollution Control.

06.09 Thru 506.19 Vacant

COATING SYSTEMS

506.20 Description

Work shall consist of the field application of coating systems in accordance with the Plans and Specification. Each coat shall be applied in accordance with the manufacturer's product data sheet and this Specification.

506.21 Materials

FIELD COATING SCHEDULE

One of the following coating systems shall be used. Alternately, an equivalent system may be proposed and used by the Contractor, subject to approval by the Authority:

Manufacturer:	The Sherwin Williams Company
Primer:	Corothane I PrePrime moisture-cure urethane
Intermediate:	Corothane I MIO Aluminum moisture-cure urethane
Finish:	Corothane I HS moisture-cure urethane

Manufacturer:	Wasser Corporation
Primer:	MC Miozinc 2.8 moisture-cure urethane
Intermediate:	MC Miomastic 2.8 moisture-cure urethane
Finish:	MC Shieldcoat 2.8 moisture-cure urethane

Manufacturer:	Xymax Coatings, Inc.
Primer:	Mono Lock PP moisture-cure polyurethane
Intermediate:	Mono Ferro PUR moisture-cure polyurethane
Finish:	Bridge Finish moisture-cure polyurethane

All three coats of the paint system shall be contrasting colors as follows:

Primer:	Default by the manufacturer
Intermediate:	Light gray as approved by the Resident
Finish:	"Toll Booth Dark Blue" Color formula to be provided by the Resident

The Contractor shall provide a dried sample of the specified finish color to the Authority for approval prior to the batching and delivery of the finish coat. Sample size, shape, and material shall be agreed upon with the Resident prior to submission.

The Contractor shall provide the paint batch description, lot number, date of manufacture, shelf life, and the manufacturer's published storage requirements to the Resident. The Contractor shall provide the manufacturer's product data sheet for each coating. The product data sheets shall include the manufacturer's recommended requirements for the equipment, surface cleanliness, mixing, thinning, application, environmental conditions, touch-up/repair procedures, and cure times for the entire range of allowable environmental conditions. All product data sheets and MSDS shall be submitted to the Resident for approval prior to initiating any coating work.

The product data sheets shall also provide the minimum and maximum recoat times for the primer and intermediate coat over the expected range of temperatures, relative humidity, and range of acceptable dry film thicknesses. The manufacturer's product data sheets at the time of submission shall be those used during the duration of the Project. Newly published product data sheets may be substituted as approved by the Resident.

506.22 Limits of Work

All eight remaining canopy support columns including all surfaces from the top of concrete to the bottom of the canopy underside panels.

506.23 Surface Preparation

The following SSPC cleanliness levels are required for this work:

All remaining canopy support columns (8 total) with a cleanliness level of SSPC-SP 2. All remaining canopy support column areas of corrosion, deteriorated paint, and other detrimental foreign matter to an SSPC-SP 3 condition.

Solvent clean all surfaces as necessary with clean rags to remove dirt, grease, oil, and other foreign matter in accordance with SSPC-SP 1 before employing surface preparation methods. Pressure washing is not permitted.

Surface preparation cleanliness levels as stated above for these areas shall be the minimum unless a higher standard of surface cleanliness is required by the manufacturer's product data sheet. SSPC-VIS 1 shall be used to determine acceptable surface cleanliness.

The tools used to remove these corrosion products shall be identified in the submittals and accepted by the Resident. If the surface preparation or removal of rust results in nicks or gouges, the work will be suspended by the Resident. The Contractor shall demonstrate that the necessary adjustments have been made to prevent a reoccurrence of the damage prior to resuming work.

The Contractor shall remove and properly dispose of any latent concrete from prior toll plaza structural work, accumulated winter sand/salt, bird droppings, dirt, grease, oil, asphalt coatings, and debris from all areas to be prepared and painted prior to undertaking any paint removal or surface preparation operations. Removal and disposal of existing debris and foreign matter as described above shall be considered incidental to the Surface Preparation.

Chloride and ferrous salts may be present on the existing surfaces to be cleaned and painted, especially where corrosion is present. Prior to painting these surfaces, these salts must be reduced to acceptable levels. The Contractor shall verify that residual soluble salts on the canopy support columns are at a surface cleanliness condition of SC-2 or better, in accordance with SSPC-SP 12, as determined by the KTA SCAT Kit, Chlor-Rid Test, or an approved equal. Acceptable level thresholds are:

- Chloride $< 7\ \mu g/cm^2$
- Ferrous Ion $< 10\ \mu g/cm^2$
- Sulfate $< 17\ \mu g/cm^2$

Test for chlorides after surface preparation at the following frequency, unless approved otherwise: Two tests per toll booth work zone. Test locations are to be approved by the Resident or Q.A.I.

If unacceptable levels of soluble salt remain, the Contractor shall clean the affected areas in accordance with SSPC-SP 1 until acceptable results are achieved. All testing and retesting shall be incidental to the Surface Preparation and shall be at no additional cost to the Authority and shall not be just cause for a time extension. The Contractor shall describe the proposed method(s) of soluble salt remediation, and other contamination in the Surface Preparation / Painting Plan.

After surface preparation, the surface shall be visually inspected by the Q.C.I. and Q.A.I. for fins, tears, delaminations, and other unacceptable discontinuities. Unacceptable discontinuities shall be removed with a grinder or other suitable power tool and the area shall be blended at a slope of approximately 1:20.

Prior to the first coat or primer application, all steel surfaces to be painted shall be cleaned of dust and debris by vacuum method. Surface blow down with compressed air will not be permitted.

The allowable time between the SSPC-SP 3 power tool cleaning and primer application shall not exceed the manufacturer's published recommendations or eight hours, whichever is less.

506.24 Application

The Contractor shall provide adequate protection to the local environment, traveling public, and toll plaza employees from the application of the coating. Only brush and roller application is allowed or as recommended by the manufacturer. Application by spray will not be permitted.

The Q.A.I. shall witness the mixing and thinning of the coatings. Failure to notify the Q.A.I. shall result in the coating being rejected.

Thinning and mixing of coatings shall be in conformance with the manufacturer's product data sheet and shall be in conformance with all Local, State and Federal VOC regulations. Thinner shall be measured using a graduated cup or other container that clearly indicates the amount of thinner being added. Mixing shall be done using the method, equipment, and time recommended by the coating manufacturer.

The Q.C.I. shall record the batch and lot numbers of the coating, the type and amount of thinner used, and the time and pot life of the coating. The Q.A.I. shall confirm that the record is correct.

Coating equipment including mixers, rollers, and brushes shall meet the recommendations of the manufacturer's product data sheet.

Surfaces to be painted that are adjacent to concrete, canopy underside panels, traffic signs, roof light fixtures, traffic (red/green) light fixtures, toll booths, and “EZ Pass” equipment, shall be masked off to provide a neat appearance when painted. Acceptability of the masking procedure shall be at the discretion of the Resident.

The environmental conditions in the immediate vicinity of the steel to be coated shall be within the ranges in the manufacturer's product data sheet during the coating operation and during the cure period. Ambient temperature, surface temperature, relative humidity, and dew point shall be measured and recorded by the Q.C.I. The Q.A.I. may perform environmental testing in addition to the testing performed by the Q.C.I. If there are differences between the test results, the differences shall be resolved or explained to the satisfaction of the Resident prior to coating application. The results of the environmental testing shall be recorded in the JCR.

Cure and recoat times shall be in accordance with the manufacturer's product data sheet for the environmental conditions at the time of application and cure and recorded in the JCR. The Contractor shall provide the cure and recoat times for the environmental conditions in the immediate vicinity of the coated product. The cure times with coinciding environmental condition requirements shall be provided on the product data sheet or be authorized in writing by a technical representative of the coating manufacturer.

If the coating becomes contaminated with dust, debris, over spray, or other deleterious material, the surface shall be solvent cleaned in accordance with SSPC-SP 1 prior to any subsequent coating applications. Other methods of cleaning may be used if approved by the Resident. Areas exhibiting trapped fiber or bristles shall be rejected.

The Q.A.I. shall be given ample notice and time in order to inspect the product prior to coating, recoating, or removal of paint from unacceptable areas. Substrates that are primed or surfaces that are recoated without notification of the Q.A.I. shall be rejected and no further coating shall be performed. Coating applied without notification of the Q.A.I. may be investigated by destructive and non-destructive testing as directed by the Resident and by a review of the JCR. The Resident may reject, conditionally accept, or accept the coating based on documentation and test results. Rejected coating shall be removed and re-applied. Conditionally accepted coatings shall be made acceptable as directed by the Resident. The cost of additional testing and repairs shall be borne by the Contractor.

506.25 Dry Film Thickness

DFT shall be measured in accordance with SSPC-PA 2. The results shall be documented in the JCR. The JCR documentation shall include the actual gage readings, spot average and the location(s).

506.26 Coating Repairs and Touch-Up

Repairs and touch-up shall be done in accordance with the manufacturer's product data sheet and this Specification. Areas to be touched-up shall be prepared to assure proper adhesion of each coat. Each existing coat shall be feathered back to assure that each touch-up coat is continuous with each corresponding existing coat. Environmental conditions, cure times, and DFTs shall be in accordance with manufacturer's product data sheet for the coating being applied. Repairs to the topcoat shall be smooth and result in a uniform gloss and color match. The Resident shall have final authority concerning acceptable appearance.

506.27 Handling and Storage

No coating material, coating equipment, or cleaning equipment shall be stored within the limits of the toll plaza as directed by the Resident.

506.28 Observed Steel Defects

If any cracks or section loss in the existing steel are found during cleaning or painting operations, the Contractor shall immediately notify the Resident. The Contractor shall not work on the area in question until the Contractor has received the Resident’s approval.

506.29 Through 506.69 Vacant

CONTAINMENT SYSTEM AND DISPOSAL OF HAZARDOUS MATERIALS

506.70 Description

The containment enclosure shall meet the criteria for Class 3P containment classification of SSPC Guide 6, Guide for Containing Debris Generated during Paint Removal Operations.

The Contractor shall comply with all applicable Local, State and Federal laws, ordinances, and rules and regulations relating to the prevention of and/or abatement of pollution. The Contractor shall use all necessary means to prevent new pollution of the environment (air, soil, and water) in the project area and the areas immediately adjacent to the project area.

506.71 Hazardous Materials

A Hazardous Waste Management Plan shall be prepared in accordance with Special Provision Section 506.08(E), Hazardous Waste Management Plan. Potential hazardous material and pollutants such as fresh paint, old paint chips, cleaning debris, chemicals, fuels, lubricants, bitumen, and any other harmful or toxic material shall be contained and disposed of in such manner and in such place as will conform with all applicable Local, State, and Federal regulations governing the disposal of such materials.

It shall be the Contractor's responsibility to provide documentation to the Resident that all hazardous or toxic materials were disposed of in an acceptable manner. The documentation shall consist of truck manifests, weigh-bills, or such other documentation that may be acceptable to the Resident. The documentation shall show the method and site used and the quantity of material disposed of.

Prior to starting the surface preparation and/or coating application, the Contractor shall submit the proposed containment and pollution control measures for the Resident's review. The proposal shall be sufficiently detailed to show that conformance with the requirements specified herein or elsewhere in the Contract will be achieved. See Special Provision 105.2.4.2, 506.08(D) and 506.08(E) for additional requirements.

Hazardous waste or toxic materials shall not be placed or accumulated on unprotected ground or released into waters of the State. Work areas shall be adequately shielded at all times to prevent dispersion of debris by wind or rain. All of the Contractor’s equipment and storage areas used for the handling and storage of hazardous waste and hazardous materials shall be placed on an impervious surface in accordance with MaineDEP’s Handbook for Hazardous Waste Generators. Any evidence of improper storage and handling shall be cause for immediate suspension of work in progress, and work will not be allowed until corrective actions are taken. Emergency procedures to be taken in the event of a release of hazardous material to the environment shall be part of the Contractor’s Spill Prevention, Control and Countermeasures Plan that is required in accordance with Subsection 105.8.1 Temporary Soil Erosion and Water Pollution Control.

Non-compliance may expose the Contractor to fines assessed by DEP/EPA for failing to comply with Local, State, and Federal regulations. The Contractor shall not be granted additional Contract time for suspensions of work due to non-compliance.

506.72 Containment Enclosure

The Containment enclosure(s) shall meet the criteria for Class 3P containment classification of SSPC Guide 6, Guide for Containing Debris Generated during Paint Removal

Operations and shall be in conformance with the requirements of this Section and Subsection 506.08(D), Containment and Environmental Plan.

The Contractor's choice of equipment or system used for the collection of the paint removal and cleaning debris will be reviewed by the Resident for health and safety, probable environmental impact, and to determine the suitability for the intended purpose.

Personnel working in a containment system may be exposed to health hazards. The Contractor shall be responsible for supplying adequate protection for all personnel required to be in the containment system. See Subsections 506.80 through 506.82 for specific requirements.

If the Resident deems emissions from the containment enclosure are unacceptable, all cleaning or painting operations shall cease until the problem is resolved.

Cleaning or painting materials, drips, or any form of construction debris from the cleaning and painting operations are not allowed to touch any vehicles of the traveling public. The Authority may restrict, prohibit, or require changes to the Contractor's means and methods if in the Resident's judgment they will not be or by demonstration are not effective in protecting the traveling public.

506.74 through 506.79 Vacant

LEAD HEALTH PROTECTION

506.80 Description

The Contractor is fully responsible for the protection of their employees, their Subcontractor's employees, and Authority personnel and their representatives from exposure to hazardous materials under OSHA regulations.

If applicable, the Contractor shall include requirements specified in Subsections 105.2.4.2, Lead Paint, and 506.08(G), Health and Safety Plan, into the Health and Safety Plan submittal.

Typical work tasks that pose a lead exposure risk consist of, but are not necessarily limited to, welding, burning paint, flame cutting, abrasive blast cleaning, grinding, chipping, needle gun cleaning, lead burning, manual scraping and sanding, manual demolition of structures, heat gun cleaning, peening on existing structural steel, abrasive blast cleaning debris cleaning, using lead containing mortar, abrasive blasting enclosure movement and removal, power tool cleaning, lead removal equipment cleaning, decontamination trailer cleaning, rehabilitation of existing structural steel, gouging, and rivet busting.

All Projects where employee lead exposure without regard to the use of respirators, may exceed the action level, that is employee exposure to an airborne concentration of lead of 50 micrograms per cubic meter of air (50 μ g/m^3) averaged over an eight hour period (i.e., removal

of paint containing lead, etc.) must have a decontamination facility and hand-wash facility on-site and available for use by the designated staff.

Authority personnel or their representatives shall be allowed access to each work site covered by the provisions of the Health and Safety Plan and shall be furnished upon request with such information and assistance by the Contractor as is required to make a complete and detailed inspection.

506.81 Materials

A. Protective Equipment: Respiratory protective equipment shall conform to 42 CFR Part 84, OSHA Standard for Lead in Construction 29 CFR Part 1910.134, and 29 CFR Part 1926.62. Protective clothing shall be in conformance with 29 CFR Parts 1910.132 and 1910.133. The minimum protective clothing required shall be head covering, coveralls (reusable or disposable clothing), gloves, dedicated work-boots or disposable over-boots, eye protection, hearing protection, and hardhat.

B. Hand-Wash Facility: The number of facilities to be provided will be dictated by the site(s) and approved by the Resident. Each facility shall be equipped with hot and cold clean water, hand soap or similar cleansing agents, individual hand towels or sections made of cloth or paper, warm air blowers or clean individual sections of continuous cloth toweling which the workers will use to wash and dry their hands, face and exposed skin prior to eating, drinking, smoking or applying cosmetics. Each facility shall be located as close to the work site as physically possible. Ownership of and liability for the facility shall remain with the Contractor throughout the duration of the Project. The facility shall comply with 29 CFR Part 1926.51.

   Any wastewater generated shall be filtered/treated to be acceptable to current state and/or local standards for discharge into the existing public wastewater system. Each facility shall be kept in a sanitary condition and clean as defined in the most recent OSHA requirements. At a minimum, the facility shall be cleaned after every shift in which it is used.

C. Decontamination Facility: Facility(s) shall comply with 29 CFR Part 1926.51. The number of facilities to be provided will be dictated by the site(s) and approved by the Resident. The facility shall be located as close to the work site as physically possible. If the Contractor is unable to locate the decontamination facility close to specific work area, a designated shuttle vehicle shall be provided. This vehicle shall be classified as contaminated and shall remain at the jobsite in the decontamination zone. The vehicle shall be operated and maintained to eliminate cross-contamination with the support zone. The vehicle shall be cleaned as defined in the most recent OSHA protocols. Ownership of and liability for the facility and shuttle vehicle shall remain with the Contractor throughout the duration of the Project.

Any wastewater generated shall be filtered/treated to be acceptable to current state and/or local standards for discharge into the existing public wastewater system.

506.90 Method of Measurement

Field Painting of Existing Steel Canopy Supports shall be measured for payment by lump sum for the toll plaza work, complete, and accepted.

Surface Preparation of Existing Steel Canopy Supports shall be measured for payment by lump sum for the toll plaza work, complete and accepted.

Containment System and Pollution Control Measures shall be measured for payment by the lump sum for the toll plaza work, consisting of all work previously described, completed, and accepted.

Disposal of Hazardous or Toxic Material shall be measured for payment by the lump sum for the toll plaza work, consisting of all material satisfactorily disposed of in conformance with these Specifications.

Lead Health Protection, if applicable, will not be measured for payment, and shall be incidental to the Contract.

506.91 Basis of Payment

The accepted quantity of Surface Preparation of Existing Steel Canopy Supports will be paid for at the respective Contract lump sum price for the toll plaza work. Payment will be full compensation for furnishing all materials, labor, tools, equipment, scaffolding, QC inspections, and any other incidentals necessary for the satisfactory performance of the work.

All work for Field Painting of Existing Steel Canopy Supports will be paid for at the Contract lump sum price for the toll plaza work. Payment will be full compensation for furnishing all materials, labor, tools, equipment, scaffolding, QC inspections, and any other incidentals necessary for the satisfactory performance of the work.

Containment System and Pollution Control Measures will be paid for at the Contract lump sum price for the toll plaza work. Payment will be full compensation for furnishing all materials, labor, tools, equipment, scaffolding, QC inspections, and any other incidentals necessary for the satisfactory performance of the work..

Disposal of Hazardous or Toxic Material will be paid for at the Contract lump sum price for the toll plaza work. Payment will be full compensation for all permits, tests, transportation, tipping fees, and any other incidentals necessary for the satisfactory performance of the above work.

Lead Health Protection, if applicable, will not be measured for payment, and shall be incidental to the Contract.

Partial payment of lump sum items as described in this 506 Specification may be made as lanes are completed as approved by Resident.

Payment will be made under:

Pay Item		Pay Unit
506.14	Field Painting of Existing Steel – Canopy Supports	Lump Sum
506.17	Surface Preparation of Existing Steel – Canopy Supports	Lump Sum
506.18	Containment System and Pollution Control Measures	Lump Sum
506.191	Disposal of Hazardous or Toxic Material	Lump Sum

SPECIAL PROVISION

SECTION 506

SHOP COATING APPLICATION

506.11 Description

This Specification covers the shop cleaning and painting of the new West Gardiner Toll Plaza Structure Canopy Support Columns (HSS 8x6 - 4 total) and the new Canopy Structural Members (HSS 12x6 - 2 total) including all connection components (plates, blocks, etc.).

The work shall consist of furnishing all supervisory personnel, competent person(s), labor, tools, equipment, Quality Control activities, materials, and incidentals necessary for satisfactory completion of the work.

506.12 Materials

Materials shall comply with the requirements of the respective Subsections of this Specification.

506.13 Submittals

The Contractor shall submit for review by the Authority a materials list and other such details as described within the Plans and the respective Subsections of this Specification.

506.15 Inspection

For the purpose of this Specification, the following definitions shall apply:

Quality Assurance Inspector (Q.A.I.): The Authority's authorized representative for shop inspection.

Quality Control Inspector (Q.C.I.): The Contractor's authorized representative for shop surface preparation and application.

Quality Control (Q.C.) is the responsibility of the Contractor. The Q.C.I. shall inspect all aspects of the work and shall supervise required testing. The Q.C.I. shall record measurements and test results in a Job Control Record (JCR). The Q.C.I. shall reject materials and workmanship that do not meet Contract requirements. The results of all testing shall be documented and a copy made available to the Q.A.I. on a daily basis or as requested by the Resident or Q.A.I.

The JCR shall include the following, as applicable:

- Surface Preparation Cleanliness and Anchor Profile – before application of the first or primer coat.

- Environmental Conditions – Ambient temperature, surface temperature, relative humidity, and dew point.
- Dry Film Thickness (DFT) – After the coating has cured and before the application of any subsequent coating.
- Type of testing equipment, model, serial number, and calibration data, if applicable.
- Type of application equipment.
- Coating batch and/or lot number, date of manufacture, and shelf life.
- Manufacturer's certification of conformance.
- Name(s) of applicator(s).
- Cure data, cure times, temperature, and relative humidity.
- Final inspection by the Q.C.I. and acceptance by the Resident or Q.A.I.

Quality Assurance (Q.A.) is the prerogative of the Authority. The Q.A.I. will ensure that the Q.C. is being performed properly, verify documentation, periodically inspect workmanship and witness testing. Q.A. testing deemed necessary by the Resident in addition to the minimum test requirements shall be scheduled to minimize interference with the production schedule.

506.16 Quality Assurance Inspector's Authority

The Q.A.I. will have the authority to reject material or workmanship that does not meet the Contract requirements. The acceptance of material or workmanship by the Q.A.I. will not preclude subsequent rejection, if materials or workmanship is found unacceptable, by other authorized representatives of the Authority.

506.17 Rejections

Rejected material or workmanship, as described above, shall be corrected or replaced by the Contractor at no additional cost to the Authority.

506.18 Contractor Qualification

Shop applied coating systems shall be applied in facilities holding a current AISC Sophisticated Paint Endorsement (SPE) or has been qualified in accordance with SSPC QP3-Standard Procedure for Evaluating Qualifications of Shop Painting Applicators.

All Contractor and Subcontractor SSPC certifications specified above shall be current and in-place prior to bid opening. The Contractor shall ensure that all required SSPC certifications are kept current throughout the duration of the Contract until final acceptance of the work. A copy of valid current certifications shall be transmitted with the Bid Package.

COATING SYSTEMS

506.30 Description

Work shall consist of the shop application of coating systems in accordance with the Plans and Specification. Each coat shall be applied in accordance with the manufacturer's product data sheet and this Specification.

506.31 Materials

SHOP COATING SCHEDULE

The following coating system shall be used. Alternately, an equivalent system may be proposed and used by the Contractor, subject to approval by the Authority:

Manufacturer:	The Sherwin Williams Company
Primer:	Corothane I Galvapac 1K zinc-rich primer
Intermediate:	Corothane I Ironox B moisture-cure urethane
Finish:	Corothane I HS moisture-cure urethane

All three coats of the paint system shall be contrasting colors as follows:

Primer:	Default by the manufacturer
Intermediate:	As approved by the Resident
Finish:	"Toll Booth Dark Blue": Color formula to be provided by the Resident

The Contractor shall provide a dried sample of the specified finish color to the Authority for approval prior to the batching of the finish coat. Sample size, shape, and material shall be agreed upon with the Resident prior to submission.

The Contractor shall provide the paint batch description, lot number, date of manufacture, shelf life, and the manufacturer's published storage requirements to the Resident. The Contractor shall provide the manufacturer's product data sheet for each coating. The product data sheets shall include the manufacturer's recommended requirements for the equipment, surface cleanliness, mixing, thinning, application, environmental conditions, touch-up/repair procedures, and cure times for the entire range of allowable environmental conditions. All product data sheets and MSDS shall be submitted to the Resident for approval prior to initiating any coating work.

The product data sheets shall also provide the minimum and maximum recoat times for the primer and intermediate coat over the expected range of temperatures, relative humidity, and range of acceptable dry film thicknesses. The manufacturer's product data sheets at the time of submission shall be those used during the duration of the Project. Newly published product data sheets may be substituted as approved by the Resident.

506.32 Limits of Work

The new canopy support columns (HSS 8x6 - 4 total) which includes all surfaces with the approved 3-coat system. The new canopy structural members (HSS 12x6 - 2 total) which includes all surface areas with one coat of the approved zinc-rich primer. The new connection components between the support columns and structural members (plates, blocks, etc.) with one coat of the approved zinc-rich primer.

The faying surfaces of bolted connections shall be painted with one coat of the zinc-rich primer meeting the AASHTO/RCSC requirements for Class B slip-critical connections. This coat shall not exceed the maximum thickness nor fail to meet the minimum cure time specified on the manufacturer's product data sheet. Both surfaces of bolted connections shall be masked off within two inches of bolt holes after application and curing of the primer for subsequent coating application. Areas required to be field painted after welding and bolting is complete shall meet the application requirements of Subsection 506.36 Coating Repairs and Touch-up.

506.33 Surface Preparation

Prior to abrasive blast cleaning, all corners and edges of members and plates, whether rolled cut or sheared, exposed in the assembled product shall be rounded to approximately an 1/8 inch radius. A series of tangents to the approximate radius will be considered as a rounded. The Contractor shall prepare a plate approximately 2 inch x 12 inch with the appropriate rounded corner and edge. The Q.C.I. and Q.A.I. shall agree upon the acceptability of the corner preparation and the plate shall become the Job Standard. The plate shall remain the property of the Contractor.

Surfaces to be coated shall be abrasive blast cleaned to meet the requirements of SSPC-SP 10/NACE No. 2 or the coating manufacturer's published recommendations, whichever is the more stringent. SSPC-VIS 1 shall be used to determine acceptable cleanliness. The Q.C.I. and Q.A.I. shall evaluate the first piece using VIS 1 as a comparator. No further blast cleaning shall be done until the Q.C.I. and Q.A.I. agree upon the acceptable Job Standard for cleanliness. If more than one method of abrasive blast cleaning is used (e.g., centrifugal blast and compressed air), the acceptable Job Standard shall be established for each method. At the Contractor's option, a sample piece may be abrasive blast cleaned and sealed with a clear coating to preserve the surface preparation and the sample piece may be used as a comparator to establish the agreed upon Job Standard.

After abrasive blast cleaning, the surface shall be visually inspected for fins, tears, delaminations and other discontinuities. Fins, tears and other discontinuities shall be removed with a grinder or other suitable power tool and the area shall be blended at a slope of approximately 1:20. The affected area(s) shall be abrasive blast cleaned to develop an acceptable anchor profile.

The anchor profile shall meet the requirements of the coating manufacturer's published recommendations. The blast media shall contain enough grit to provide an angular anchor profile. The anchor profile shall be measured in accordance with ASTM D 4417 Method C. If

the anchor profile fails to meet the minimum requirements, the Contractor shall re-blast the substrate until the minimum required anchor profile is achieved. If the anchor profile exceeds the maximum allowed in the manufacturer's published recommendations, the substrate shall be coated only with the approval of the Resident.

The Q.C.I. shall measure the anchor profile of the substrate on each plane of the first piece and each additional piece with a significant change in size or geometry. The Q.A.I. will witness the testing. After it has been established to the satisfaction of the Resident, that the abrasive blast equipment is capable of providing uniform, acceptable surface preparation, a diminished degree of testing may be agreed upon by the Q.C.I. and Q.A.I. The Quality Assurance Inspector may require that the anchor profile be measured and recorded on any surface that is, in the judgment of the Quality Assurance Inspector, unacceptable. Failure to measure anchor profile as required will result in rejection of the surface preparation on the piece in question.

If there is a significant change in surface cleanliness or anchor profile due to blast media degradation or other reasons, the Contractor shall cease the blast operation until corrective action is taken.

If compressed air is used for abrasive blast cleaning, a blotter test shall be performed in accordance with ASTM D 4285 at the beginning of each shift and at any other time the Q.A.I. directs it. The Q.C.I. and Q.A.I. shall be present to witness the blotter test.

The allowable time between abrasive blast cleaning and primer application shall not exceed the manufacturer's published recommendations or eight-hours, whichever is less. If the substrate develops flash rust (rust bloom) before the primer is applied or before the primer application is completed, the piece shall be re-blasted to bare substrate and re-coated.

506.34 Application

All protective coating shall be applied using either conventional or airless spray equipment meeting the manufacturer's published recommendations. Striping and touchup of areas less than 36 in^2 may be applied by other methods with the approval of the Resident. Protective coating shall not be applied when the ambient temperature in the immediate vicinity of the piece(s) in question is above 90˚F or below 40˚F. Thinning and mixing of coatings shall be in conformance with the manufacturer's published instructions. Thinner shall be measured using a graduated cup or other container that clearly indicates the amount of thinner being added. Mixing shall be done using the method, equipment and for the amount of time recommended by the coating manufacturer.

Primer, intermediate, and top coat shall be applied in accordance with the manufacturer's published recommendations. Environmental conditions in the immediate vicinity of the surfaces to be coated shall be within the range of the manufacturer's published requirements both during the coating operation and during the curing period. Primer shall not be force-cured.

Environmental conditions shall be measured by the Q.C.I. in the immediate vicinity of the surfaces to be coated. The Q.A.I. may perform environmental testing in addition to the testing performed by the Q.C.I. If there are significant differences between the test results, the differences shall be resolved or explained to the satisfaction of the Resident prior to coating application. The results of the environmental testing shall be recorded in the JCR.

Corners, fasteners, welds and inaccessible locations shall be striped in accordance with SSPC-PA 1. The Contractor shall meet the minimum Dry Film Thickness (DFT) requirements on all surfaces. The Contractor may stripe with the intermediate coat if approved by the Resident.

Recoat time shall be in accordance with the manufacturer's published requirements for the environmental conditions at the time of application and cure. If the coating is contaminated with dust, debris, over spray or other deleterious material, the surface shall be cleaned in accordance with SSPC-SP 1 immediately prior to recoating. Other methods of cleaning may be used if approved by the Resident.

The Q.A.I. shall be given ample notice in order to inspect the product prior to coating, recoating or removal of paint from the area. "Ample notice" shall be defined at the Pre-Job meeting depending on shop or site conditions.

Substrates that are primed or surfaces that are recoated without notification of the Q.A.I. will be rejected and no further coating shall be done on the piece. Coating applied without notification of the Q.A.I. will be investigated by destructive and non-destructive testing as approved by the Resident and by a review of the JCR. The Resident may reject, conditionally accept, or accept the coating based on documentation and test results. Rejected coating shall be removed and re-applied. Conditionally accepted coatings shall be made acceptable as approved by the Resident. The cost of additional testing and repairs shall be borne by the Contractor.

506.35 Dry Film Thickness

DFT shall be measured in accordance with SSPC-PA 2. The results shall be documented in the JCR. The JCR documentation shall include the actual gage readings, spot average and the location(s).

506.36 Coating Repairs and Touch-up

Touch-up shall be done in accordance with the manufacturer's product data sheet and this Specification. Areas to be touched-up shall be prepared to assure proper adhesion of each coat. Each existing coat shall be feathered back to assure that each touch-up coat is continuous with each corresponding existing coat. The top-coat shall be smooth and uniform in appearance.

Damaged or unacceptable coatings shall be repaired using the same coating system. Environmental conditions cure times, and DFTs shall be in accordance with manufacturer's product data sheet for the coating being applied. Repairs to topcoat shall result in a uniform gloss and color match. The Resident shall have final authority concerning acceptable appearance.

506.37 Handling and Storage

The coating shall be adequately cured before handling, but under no circumstances shall the product be handled before the coating has achieved the manufacturer's published minimum cure time. Coated steel members shall be handled in a manner to avoid damage to the coating. Members shall be lifted and moved using non-metallic slings, padded chains and beam clamps, softeners or other non-injurious methods. Material shall be stored, both at the coating facility and in the field, in a manner that prevents damage to the coating.

Material shall not be loaded for shipment until the shop coating has adequately cured and been inspected. The components will be stamped "APPROVED" only after the loading has been completed and approved, and no material shall be shipped without the prior approval of the Resident.

Damage to the coating that is discovered after the product is loaded for shipment to the jobsite shall be documented by the Q.C.I. Repairs shall not be made unless the damaged area is repaired in accordance with Subsection 506.26 Coating Repairs and Touch-up. Repairs that cannot be acceptably done on the truck shall be done in the shop or in the field at the Contractor's option.

HOT-DIP GALVANIZING

506.40 Description

This work shall consist of surface preparation and application of hot-dip galvanizing in accordance with the Plans and this Specification. Hot-dip galvanizing shall meet the requirements of AASHTO M 111/ASTM A 123, Standard Specification for Zinc (Hot-Dip Galvanized) Coatings on Iron and Steel (A 123), including any applicable requirements listed in Section 2-Referenced Documents. The minimum average coating thickness grade shall conform to Table 1. The frequency of testing shall be in accordance with Section 6. The choice of the test method is the prerogative of the Contractor. Record the test results and provide them to the Department. Provide certification of compliance and written test results to The Department in accordance with A 123 -Section 10.

506.41 Surface Preparation

Abrasive blast-clean the steel to a minimum of SSPC-SP 6, Commercial Blast Cleaning (SP 6) prior to galvanizing. Grind all corners exposed in the assembled product to a 1/16 inch radius prior to galvanizing.

506.42 Repairs

Repairs to galvanizing shall be in accordance with ASTM A 780, Standard Practice for Repair of Damaged and Uncoated Areas of Hot-Dip Galvanized Coatings (A 780), Annex A1 or A3. Zinc-rich paints for repairs may only be used with approval of the Fabrication Engineer.

506.43 Top-coating Galvanized Surfaces

Areas of galvanized surfaces to be top-coated will be described on the Plans or in the Special Provisions.

Do not use chromate quenching or other types of quenching after galvanizing. Remove runs, sags, dross and other deleterious material from surfaces to be painted. Provide a smooth uniform surface, free of heavy build areas or other discontinuities that will project through the finish coat. Perform repairs to galvanizing in accordance with A 780. Remove visible surface contaminants in accordance with SSPC-SP 1, Solvent Cleaning (SP 1) prior to blast cleaning. Blast-clean surfaces to be coated in accordance with SSPC-SP 7/NACE No.4-Brush-Off Blast-Cleaning (SP 7). Measure the anchor profile in accordance with ASTM D 4417 Method C (replica tape). Record the results in a manner acceptable to the Fabrication Engineer. Assure that the anchor profile corresponds with the anchor profile requirements on the Manufacturer's Product Data Sheet.

506.92 Method of Measurement

Shop Coating of New Steel shall be measured for payment by lump sum for the toll plaza work, complete, and accepted. The limits shall be as described within these Specifications.

506.93 Basis of Payment

All work for Shop Coating of New Steel will be paid for at the Contract lump sum price for the toll plaza work. Payment will be full compensation for furnishing all material, labor, equipment, and incidentals necessary for the satisfactory performance of the work.

Payment will be made under:

Pay Item		Pay Unit
506.15	Shop Coating of New Steel	Lump Sum

SPECIAL PROVISION

SECTION 508

MEMBRANE WATERPROOFING

508.01 Description

The second sentence of the first paragraph is deleted and replaced with the following:

When high performance waterproofing membrane is specified, the Contractor shall furnish and install an approved high performance waterproofing membrane to the concrete deck with a heat welded membrane system applied in accordance with the Plans, Specifications and the manufacturer's published recommendations.

508.02 Materials

The first sentence of the first paragraph is deleted and replaced with the following:

When high performance waterproofing membrane is specified, the materials shall meet the requirements of the manufacturer and shall be one of the approved heat welded products on the MaineDOT's Prequalified List of Approved Materials for High Performance Waterproofing Membrane.

SPECIAL PROVISION

SECTION 511

COFFERDAMS

(Temporary Earth Support Systems)

Section 511, Cofferdams, is deleted in its entirety and replaced with the following:

511.01 Description

This work shall consist of the complete design, construction, maintenance and removal of all temporary earth support systems including, but not necessarily limited to, cofferdams, caissons, cribs and sheeting, and other related work, including dewatering, required to allow for the excavation of foundation pits; to permit and protect the construction of structural units; to allow for the demolition and/or construction of concrete abutments, piers, foundations, wingwalls, headwalls, and culverts; removal and/or construction and maintenance of approach roadways; and any other work requiring temporary earth support mandated by OSHA, Subpart P, Excavation Requirements, or required for the maintenance of traffic. The temporary earth support systems shall meet all of the applicable requirements of the Standard Specifications.

Temporary earth support structures shall be specified as Cofferdam(s) when it is determined a temporary earth support structure will be required to keep high ground water, stream, river, pond, lake or ocean tidal waters out of the excavation so the identified substructure unit can be constructed in the dry. The locations of Cofferdam(s) will be shown on the Plans. Cofferdam(s) may or may not require seal concrete.

All other temporary earth support structures shall be specified as Temporary Earth Support Structures. Temporary earth support structures may require pumping or dewatering to complete the Project work. The locations of temporary earth support structures may, or may not, be shown on the Plans whether required for the completion of the Contract or not. Temporary earth support structures do not require seal concrete.

511.02 Materials

A minimum of three weeks prior to the start of work, the Contractor shall submit the proposed method of temporary earth support systems for review and approval. The submission shall include working drawings and list the type and size of the proposed support, details of construction, calculations and a sequence of operations all of which shall be designed and sealed by a Professional Engineer licensed in the State of Maine. This Professional Engineer may be directly employed or otherwise retained by the Contractor. Working drawings shall consist of plan views and cross sections to illustrate clearances, limits, and retainment heights as applicable at roadway cuts, cofferdams, abutment footings, and phased construction areas. Construction shall not be started on temporary earth support systems until such submittals are approved.

Approval of the submittals shall not relieve the Contractor of the responsibility for the satisfactory functioning of the temporary earth support systems.

The temporary earth retaining structures shall be designed to support all appropriate combinations of earth, water, and surcharge loads (from traffic, construction equipment, material stockpiles, and other sources) imposed on the systems during all phases of construction. The Contractor's design shall consider the means and methods and construction sequencing proposed by the Contractor. The Contractor is responsible for selecting an appropriate factor of safety for the Temporary Earth Retaining Structures. The factor of safety and maximum applied loads are resistances used for the design shall be clearly stated on the submitted calculations.

Prior to excavating or loading the temporary earth support systems, the Professional Engineer responsible for the design of the temporary earth support systems shall provide after inspection of the systems a sealed certification to the Resident that the systems were erected in conformance with the Professional Engineer’s Plans and design details.

The submission shall also show the Contractor’s proposed method of excavation, water diversion and dewatering methods (sumps, wells, seal concrete, or well points) to minimize the flow of groundwater into the excavation. Such methods should preserve the undisturbed condition of the subgrade and permit foundation construction in-the-dry.

Seal concrete shall conform to the requirements of Class S Concrete. Where seal concrete is required to have a steel reinforcing mat, the steel reinforcement shall conform to ASTM A615, Grade 60.

511.03 Temporary Earth Support System Construction

Temporary earth support systems shall, in general, be carried well below the elevation of the bottom of footings or approach slabs, and shall be well braced and watertight. In cases where pile foundations contain batter piles, the temporary earth support system shall be installed to accommodate without obstruction the proper placement and alignment of the batter piles, either by staggering the depth of the support system or by increasing the annulus between the foundation and the support system. Unless it is contemplated that a concrete foundation seal will be placed under water, the interior dimensions of temporary earth support systems shall be such as to give sufficient clearance for the construction and inspection of forms and to permit pumping outside of forms. Exterior dimensions of the temporary earth support system shall be limited to the size shown on the Plans or those illustrated in the Project permits, whichever is more stringent.

During the placing of seal concrete, the elevation of the water inside the temporary earth support systems shall be controlled to prevent any flow through the concrete.

Temporary earth support systems shall be constructed to protect fresh concrete against damage from the sudden rising of the water body and to prevent damage by erosion.

Temporary earth support systems, including all sheeting and bracing involved, shall be

removed after the completion of the substructure unless otherwise noted on the Contract Drawings; care being taken not to disturb or otherwise injure the finished masonry. No timber or bracing shall be used in temporary earth support systems in such a way as to remain in the substructure masonry.

At bridge approaches where phased construction results in close confinement of the temporary earth support systems to the existing and new roadways, a lateral support device shall be designed and installed atop the concrete approach slab for the purpose of preventing undermining and/or settlement of the newly constructed roadway. Lateral support systems shall be designed and positioned so as to provide lateral rigidity to the completed roadway during Phase II construction, while preventing any reflection of the device through the pavement above. The design, details, and sketches of the permanent lateral support device shall be presented as part of the Contractor's submissions for Temporary Earth Support Systems. Removal of the lateral support device shall not require additional phases of construction nor compromise the integrity of the roadway. At the Contractor's option, the lateral support device may be left in place with the approval of the Resident.

511.04 Pumping

Pumping from the interior of any foundation enclosure shall be done in such a manner as to prevent any current of water that would carry away or segregate the concrete.

Pumping to dewater a sealed temporary earth support system shall not commence until the seal concrete has set sufficiently to withstand the hydrostatic pressure. In no case will pumping be permitted until a minimum of five days has elapsed since the completion of the installation of the seal concrete, when the temperature of the water body outside the temporary earth support system is greater than 4°C [40°F], or a minimum of seven days has elapsed since the completion of the installation of the seal concrete, when the temperature of the water body outside the temporary earth support systems is less than 4°C [40°F].

Sediment laden water will not be allowed to leave the Project area. The Contractor shall be required to install appropriate erosion and sedimentation control devices as approved by the Resident. Erosion and sedimentation control devices may include plain riprap, haybales, silt fence and sedimentation basins.

All water and materials pumped from excavation shall be pumped into a sedimentation basin which is of sufficient volume to detain the pumped water and materials. The water and materials removed from the excavation shall be pumped at a rate that permits infiltration of the water into the earth, preventing any overland flow or direct discharge into a stream or other waterbody.

511.05 Method of Measurement

Temporary Earth Support Systems, with the exception of Cofferdams, shall be measured for payment as one lump sum per Contract, regardless of the number of Temporary Earth Support structures required at the Project site or sites, which price shall include full

compensation for design, furnishing materials, excavation beyond the pay limits, installation, removal, tools, equipment and labor necessary to construct, maintain and remove the work in accordance with the Plans or as called for in the Contract.

If Temporary Earth Support Systems is not required due to the acceptance of a Value Engineering Proposal in accordance with Subsection 109.6, the cost of the deleted Temporary Earth Support Systems shall be included as part of the Value Engineering Proposal.

Cofferdam shall be measured for payment as one lump sum per location identified on the Plans, which price shall include full compensation for design, furnishing materials, excavation beyond the pay limits, installation, removal, tools, equipment and labor necessary to construct, maintain and remove the work in accordance with the Plans or as called for in the Contract. When cofferdams remain as permanent countermeasures against scour, removal of the unused section of sheet pile above the cut-off line shall be included in the lump sum payment.

If Cofferdam is not required due to the acceptance of a Value Engineering Proposal in accordance with Subsection 109.6, the cost of the deleted Cofferdam shall be included as part of the Value Engineering Proposal.

511.06 Basis of Payment

The accepted quantity of Temporary Earth Support Systems will be paid for at the Contract lump sum price, per Contract, for the respective Temporary Earth Support Systems.

When required, the elevation of the bottom of footing of any substructure unit may be lowered, without change in the price to be paid for Temporary Earth Support Systems. However, if the average elevation of more than 25 percent of the area of the excavation is more than three feet below the elevation shown on the Plans, and if requested by the Contractor, then the entire cost of the Temporary Earth Support Systems will be paid in accordance with Subsection 109.7, Equitable Adjustments to Compensation, instead of the Contract lump sum price.

All costs of constructing, maintaining and removing sedimentation basins; water testing; and pumping or transporting water and other materials to the sedimentation basin will not be measured separately for payment, but shall be incidental to the Temporary Earth Support Systems item.

All costs of related temporary soil erosion and water pollution controls, including inspection and maintenance, will not be measured separately for payment, but shall be incidental to the Temporary Earth Support Systems item.

All costs of lateral support devices installed in support of phased construction at the bridge approaches, will not be measured separately for payment, but shall be incidental to the Temporary Earth Support Systems item.

When required, the elevation of the bottom of footing of any substructure unit may be lowered, without change in the price to be paid for Cofferdam. However, if the average elevation

of more than 25 percent of the area of the excavation is more than three feet below the elevation shown on the Plans, and if requested by the Contractor, then the entire cost of the Cofferdam will be paid in accordance with Subsection 109.7, Equitable Adjustments to Compensation, instead of the Contract lump sum price.

All costs relating to the furnishing and placing of seal concrete will be paid under Pay Item 502.249, Structural Concrete Piers – Seal Concrete (placed under water), pay unit lump sum.

All costs relating to the excavation of earth material to facilitate construction of Temporary Earth Support Systems and Cofferdams, and placement of structural concrete will be paid under Pay Item 206.08, Structural Earth Excavation – Major Structures, pay unit cubic yard; or Pay Item 206.10, Structural Earth Excavation – Piers, pay unit cubic yard, as applicable.

All cost of constructing, maintaining and removing sedimentation basins; water testing; and pumping or transporting water and other materials to the sedimentation basin will not be measured separately for payment, but shall be incidental to the Cofferdam item(s).

All costs of related temporary soil erosion and water pollution controls, including inspection and maintenance, will not be measured separately for payment, but shall be incidental to the Cofferdam item(s).

Payment will be made under:

Pay Item		Pay Unit
511.091	Temporary Earth Support Systems	Lump Sum

SPECIAL PROVISION

SECTION 515

PROTECTIVE COATING FOR CONCRETE SURFACES

(Clear Concrete Protective Coating)

This Section is deleted in its entirety and replaced with the following:

515.01 Description

The work shall include the surface preparation and application of a clear protective coating on concrete surfaces to protect new and existing cast-in-place concrete, precast concrete and masonry structures. The coating system shall be applied to all exposed island, bumpers, curbs, fascia, median barriers, pedestals and other exposed concrete surfaces in accordance with the Plans, Specifications and the manufacturer's published recommendations.

515.02 Materials

The penetrating sealer shall be Stand Off SLX100 Water & Oil Repellent, as manufactured by ProSoCo, Inc., or an approved equal. The sealer shall have the following properties:

Active Substance:	modified alkyl alkoxy silane
Active Content:	> 90%
Form:	clear liquid
VOC:	< 3.5 pounds per gallon

The product shall comply with regulations limiting the Volatile Organic Compound (VOC) content of architectural and industrial maintenance coatings.

The Contractor shall submit the ProSoCo's product data sheets, material safety data sheets and recommended instructions for application of the Stand Off SLX100.

Materials shall be delivered to the site in original packages or containers bearing the manufacturer's labels and identification.

515.021 Substitute Materials

The Contractor shall submit a written request for approval of proposed substitute material naming the proposed manufacturer and product. This request shall be accompanied by:

1. Test data from an independent testing laboratory stating that the proposed substitute meets or exceeds the specified requirements as listed and has been tested in accordance with the specified test standards.

2. Documentation that the proposed material has a proven record of performance when used in the intended application as confirmed by actual field tests and successful installations in place on at least five similar projects.

3. Certification that if two or more types of products are intended to be used as part of a system, they will be supplied by the same manufacturer to ensure compatibility of materials, and to maintain single source manufacturer responsibility.

The Resident reserves the right to require additional testing to evaluate any proposed substitute product at no additional cost to the Authority. The Resident's decision as to the acceptability or non-acceptability of the proposed product shall be final.

515.03 Surface Preparation

All caulking, patching, and joint sealant shall be installed prior to application of the sealer. On new surfaces to be treated, all voids shall be dressed by dry rubbing to remove form marks and blemishes to present a neat appearance. Concrete and masonry surfaces shall be cleaned free of dust, surface dirt, oil, efflorescence and contaminants to ensure penetration of the sealer. The surface may be slightly damp at the time of treatment.

The Contractor may use, when required, appropriate cleaning materials recommended by the sealer manufacturer in conjunction with high pressure water for cleaning the concrete or masonry.

515.04 Application

The Contractor shall apply the clear concrete protective coating in strict accordance with the manufacturer’s published recommendations.

The application shall not be conducted when surface and air temperatures are below 40°F or above 100°F. The work shall not be conducted when there is a chance of the surface temperature falling below 40°F in the 24-hours following application.

The treatment shall not be applied during rain to wet surfaces or when there is a chance of rain within 24-hours after application. After treatment, surfaces should be protected from rain for not less than 48-hours. It shall not be applied when winds are sufficient to carry airborne chemicals to unprotected surfaces.

Prior to applying the sealer, the Contractor shall protect all surrounding non-masonry/non-concrete surfaces, landscape and lawn areas, and surfaces not designated for treatment, from contact with the penetrating sealer, and prevent overspray of the penetrating sealer caused by wind drift.

The Contractor shall ensure that all safety equipment, facilities and precautions recommended by the product manufacturer are furnished and/or strictly adhered to.

The sealer material shall be applied in the manner and with the equipment recommended by the product manufacturer. Coverage will vary depending on condition, texture and porosity of the surfaces. Pre-testing is required.

Sealer shall be applied as packaged without dilution or alteration. The sealer shall be applied with low pressure (20 psi) airless spray equipment or with a heavily saturated brush or roller unless otherwise permitted by the Resident. Sufficient material shall be applied to thoroughly saturate the surface making sure to brush out excess material that does not penetrate.

When the sealer is applied to horizontal surfaces, it shall be applied in a single saturating application with sufficient material and applied so the surface remains wet for one to two minutes before penetration into the concrete. Surface residues, pools and puddles shall be broomed-out thoroughly until they completely penetrate into the surface.

When the sealer is applied to vertical and sloped surfaces, it shall be applied in a "wet-on-wet" application for best results on most porous materials. In the case of extremely dense concrete, it may be necessary to restrict the amount of material applied to one saturating application in order to prevent surface darkening. Apply from the bottom up with sufficient material to thoroughly coat the surface and create a slight rundown below the spray pattern. Allow the first application to penetrate the concrete surface, and within a few minutes after the first coat appears dry, reapply in the same saturating manner.

When the sealer is applied to vertical and sloped surfaces, it shall be applied in two applications, 10 minutes apart, with a low pressure (20 psi) airless sprayer.

515.05 Method of Measurement

Clear Protective Coating for Concrete Surfaces will be measured for payment by the square yard, satisfactorily applied and accepted.

515.06 Basis of Payment

Clear Protective Coating for Concrete Surfaces will be paid at the Contract unit price per square yard which price shall be full compensation for all labor, materials, equipment and incidentals required for furnishing and applying the clear concrete protective coating as shown on the Plans, in accordance with these Specifications or as approved by the Resident.

Surface preparation, vegetation removal, and protection of surfaces not designated for treatment will not be measured separately for payment, but shall be incidental to the Clear Concrete Protective Coating item.

Payment will be made under:

Pay Item		Pay Unit
515.202	Clear Protective Coating for Concrete Surfaces	Square Yard

SPECIAL PROVISION

SECTION 515

PROTECTIVE COATING FOR CONCRETE SURFACES

(Epoxy Overlay)

515.01 Description

The first paragraph is amended to read:

This special provision describes furnishing and applying two layers of a two-component polymer overlay system in accordance with what is shown on the Plans or as approved by the Resident. The total thickness of the overlay system shall be 1/4 inch.

515.02 Materials

Furnish materials specifically designed for use over concrete. Pre-qualified polymer liquid binders are as follows:

Product Trade Name	Manufacturer or Supplier	Telephone
Mark-163 Flexogrid	PolyCarb, Inc.	(866) 765-9227
Sikadur 22 Lo-mod	Sika Corporation	(248) 569-5665
E-Bond 526 Lo-Mod	E-Bond Epoxies, Inc.	(954) 566-6555
Propoxy DOT Type III	Unitex	(816) 231-7700
Sure Level Epoxy (J-57)	Dayton Superior	(888) 977-9600
ICO Flexi-Coat	International Coatings, Inc.	(800) 624-8919
Flexolith	Euclid Chemical Co.	(800) 321-7628

Polymer Resin

The polymer resin base and hardener shall be composed of two-component, 100 percent solids, 100 percent reactive, thermosetting compound with the following properties:

Property	Requirements	Test Method
Gel Time [A]	15 - 45 minutes @ 75° F	ASTM C881
Viscosity [A]	7 - 70 poises	ASTM D2393, Brookfield RVT, Spindle No. 3, 20 rpm
Shore D Hardness [B]	60-75	ASTM D2240
Absorption [B]	1% maximum at 24 hour	ASTM D570
Tensile Elongation [B]	30% - 70% @ 7 days	ASTM D638
Tensile Strength [B]	>2000 psi @ 7 days	ASTM D638
Flexural Strength [B]	>4500 psi @ 7 days	ASTM D790
Chloride Permeability [B]	<100 coulombs @ 28 days	AASHTO T277

[A] Uncured, mixed epoxy binder [B] Cured, mixed epoxy binder

Aggregates

Furnish natural or synthetic aggregates that have a proven record of performance in applications of this type. Furnish aggregates that are non-polishing, clean, free of surface moisture, fractured or angular in shape; free from silt, clay, asphalt, or other organic materials; and meet the following properties and gradation requirements:

Aggregate Properties:

Property	Requirement	Test Method
Moisture Content	≤0.2%	ASTM C566
Hardness	≥6.5	Mohs Scale
Fractured Faces	100% with at least 1 fractured face & 80% with at least 2 fractured faces of material retained on No.16	ASTM 5821

Gradation:

Sieve Size	% Passing by Weight
No. 4	100
No. 8	30 – 75
No. 16	0 – 5
No. 30	0– 1

515.21 Required Properties of Overlay System

The required properties of the overlay system are listed in the table below:

Property	Requirement [A]	Test Method
Minimum Compressive Strength at 8 Hrs. (psi)	1,000 psi @ 8 hours 5,000 psi @ 24 hours	ASTM C 579 Method B, Modified [B]
Thermal Compatibility	No Delaminations	ASTM C 884
Minimum Pull-off Strength	250 psi @ 24 hours	ACI 503R, Appendix A

[A] Based on samples cured or aged and tested at 75°F
[B] Plastic inserts that will provide 2-inch by 2-inch cubes shall be placed in the oversized brass molds.

515.22 Approval of Polymer Overlay System

Submit product data sheets and specifications from the manufacturer, and a certified test report to the Resident for approval.

For materials not pre-qualified, in addition to the above submittals, submit product history/reference projects and a certified test report from an independent testing laboratory showing compliance with the requirements of the specification.

Product data sheets and specifications from the manufacture consists of literature from the manufacturer showing general instructions, application recommendations/methods, product properties, general instructions, or any other applicable information.

515.23 Construction

Conduct a pre-installation conference with the manufacturer's representative prior to construction to establish procedures for maintaining optimum working conditions and coordination of work. Furnish the Resident a copy of the recommended procedures and apply the overlay system according to the manufacturer's instructions. The manufacturer's representative familiar with the overlay system installation procedures shall be present at all times during surface preparation and overlay placement to provide quality assurance that the work is being performed properly.

Store resin materials in their original containers in a dry area. Store and handle materials according to the manufacturer's recommendations. Store all aggregates in a dry environment and protect aggregates from contaminants on the jobsite.

Surface Preparation

Determine an acceptable shotblasting machine operation (size of shot, flow of shot, forward speed, and/or number of passes) that provides a surface a profile meeting CSP 5 according to the International Concrete Repair Institute Technical Guideline No. 03732. If the Resident requires additional verification of the surface preparation, test the tensile bond strength according to ACI 503R, Appendix A of the ACI *Manual of Concrete Practice*. The surface preparation will be considered acceptable if the tensile bond strength is greater than or equal to 250 psi or the failure area at a depth of 1/4 inches or more is greater than 50 percent of the test area. Continue adjustment of the shotblasting machine and necessary testing until the surface is acceptable to the Resident or a passing test result is obtained.

Prepare the entire surface using the final accepted adjustments to the shotblasting machine as determined above. Thoroughly blast cleans with hand-held equipment any areas inaccessible by the shotblasting equipment. Do not perform surface preparation more than 24-hours prior to the application of the overlay system.

Just prior to overlay placement, clean all dust, debris, and concrete fines from the concrete surface including vertical faces of curbs and barrier walls up to a height of one inch

above the overlay with compressed air. When using compressed air, the air stream must be free of oil. Any grease, oil, or other foreign matter that rests on or has absorbed into the concrete shall be removed completely.

The Resident may consider alternate surface preparation methods per the overlay system manufacture's recommendations. The Resident will approve the final surface profile and cleanliness prior to the Contractor placing the epoxy overlay.

Application of the Overlay

Perform the handling and mixing of the epoxy resin and hardening agent in a safe manner to achieve the desired results according to the manufacturer's instructions. Do not apply the overlay system if any of the following exists:

a. Ambient air temperature is below 50°F;
b. Concrete surface temperature is below 50°F;
c. Moisture content in the concrete exceeds 4.5 percent when measured by an electronic moisture meter or shows visible moisture after two-hours when measured in accordance with ASTM D4263;
d. Rain is forecasted during the minimum curing periods listed under C.5 ;
e. Materials component temperatures below 50°F;
f. Concrete age is less than 28 days unless approved by the Resident.

After the concrete surface has been shotblasted or during the overlay curing period, only necessary surface preparation and overlay application equipment will be allowed on the concrete surface. Begin overlay placement as soon as possible after surface preparation operations.

The polymer overlay shall consist of a two-course application of epoxy and aggregate. Each of the two courses shall consist of a layer of epoxy covered with a layer of aggregate in sufficient quantity to completely cover the epoxy. Apply the epoxy and aggregate according to the manufacturer's requirements. Apply the overlay using equipment designed for this purpose. The application machine shall feature positive displacement volumetric metering and be capable of storing and mixing the polymer resins at the proper mix ratio. Disperse the aggregate using a standard chip spreader or equivalent machine that can provide a uniform, consistent coverage of aggregate. First course applications that do not receive enough aggregate before the epoxy gels shall be removed and replaced. A second course applied with insufficient aggregate may be left in place, but will require additional applications before opening to traffic.

After completion of each course, cure the overlay according to the manufacturer's instructions. Follow the minimum cure times as prescribed by the manufacturer. Remove the excess aggregate from the surface treatment by sweeping, blowing, or vacuuming without tearing or damaging the surface; the material may be re-used if approved by the Resident and manufacturer. Apply all courses of the overlay system before opening the area to traffic. Do not allow traffic on the treated area until directed by the Resident.

After the first layer of coating has cured to the point where the aggregate cannot be pulled out, apply the second layer. Prior to applying the second layer, broom and blow off the first layer with compressed air to remove all loose excess aggregate.

Prior to opening to traffic, clean all debris and polymer from the roadway. If required by the Resident, a minimum of three days following opening to traffic, remove loosened aggregates from the concrete and approach pavement.

Application Rates

Apply the epoxy overlay in two separate courses in accordance with the manufacturer's instructions, but not less than the following rate of application.

Course	Minimum Epoxy Rate [A] (GAL/100 SF)	Aggregate [B] (LBS/SY)
1	2.5	10+
2	5.0	14+

[A] The minimum total applications rate is 7.5 GAL/100 SF.
[B] Application of aggregate shall be of sufficient quantity to completely cover the epoxy.

Minimum Curing Periods

As a minimum, cure the coating as follows:

	Average temperature of concrete surface, epoxy and aggregate components in °F					
Course	60-64	65-69	70-74	75-79	80-84	85+
1	4 hrs.	3 hrs.	2.5 hrs	2 hrs	1.5 hrs.	1 hr.
2 *	6.5 hrs.	5 hrs.	4 hrs.	3 hrs.	3 hrs.	3hrs.

*Cure course 2 for eight hours if the air temperature drops below 60° F during the curing period.

515.05 Method of Measurement

The Authority will measure Epoxy Overlay in area by square yards completed and accepted, in accordance with the Plans.

515.06 Basis of Payment

Payment is full compensation for preparing the surface; for tensile bond testing; for providing the overlay; for cleanup; for sweeping/vacuuming and disposing of excess materials; and for labor, equipment, tools, and incidentals necessary to complete the work.

Payment will be made under:

Pay Item		Pay Unit
515.23	Epoxy Overlay	Square Yard

SPECIAL PROVISION

SECTION 518

STRUCTURAL CONCRETE REPAIR

(Concrete Slab Crack Repairs)
(Partial Depth Concrete Slab Repairs Type I)
(Partial Depth Concrete Slab Repairs Type II)
(Full Depth Concrete Slab Repairs)

518.01 Description

The following paragraphs are added:

The work includes concrete slab crack repairs, and partial and full depth concrete slab repairs as described below.

- Concrete Slab Crack Repairs are repairs on all exposed horizontal, vertical and overhead surfaces as shown on the Plans or identified by the Resident. Crack repairs are to be performed using the epoxy injection method.

- Partial Depth Concrete Slab Repairs Type I are repairs on all horizontal concrete surfaces above the reinforcing steel as shown on the Plans or identified by the Resident. Concrete slab repairs shall be scheduled and coordinated with the Turnpike Authority.

- Partial Depth Concrete Slab Repairs Type II are repairs on all horizontal concrete surfaces that are at the depth of the reinforcing steel or below the reinforcing steel but less than 6 inches in depth as shown on the Plans or identified by the Resident. Concrete slab repairs shall be scheduled and coordinated with the Turnpike Authority.

- Full depth concrete slab repairs are repairs on horizontal surfaces greater than six inches in depth as shown on the Plans or identified by the Resident. Concrete slab repairs shall be scheduled and coordinated with the Turnpike Authority.

518.03 Repair Materials is re-designated as Subsection 518.02 Repair Materials.

518.02 Repair Materials

The first and second paragraphs are deleted and replaced with the following:

Structural Concrete shall be used for the repair material and shall conform to the requirements of Table 1 of Subsection 502.05 for Class AAA Concrete except as noted herein. All materials used for repair of concrete or reinforcing steel shall meet the applicable requirements of

Division 700 as specified in the Standard Specification Sections 502 and 503 respectively. A patching material shall not be used without approval from the Resident.

The third paragraph and Gradation Designation tables are deleted and replaced with the following:

Where the depth of repair is six inches or less, the concrete shall be modified Class AAA and shall conform to Subsection 502.05; except that the coarse aggregate shall be 3/8 inch NMSA and conform to ASTM C33 Grading 89.

The following paragraphs are added:

For epoxy crack repairs, the injection sealant shall be a structural repair resin suitable for injection and submitted to engineer for approval. The sealant must adhere tenaciously to both damp and dry crack surfaces within the concrete. The required minimum structural properties of the material are provided in the table below.

Tensile Strength (@ 7 days)	5,000 psi	ASTM D638
Bond Strength (@ 14 days)	1,000 psi	ASTM C882
Compressive Strength (@ 3 days, 73°F)	5,000 psi	ASTM D695
Compressive Modulus (@ 7 days)	250 ksi	ASTM D695
Flexural Strength (@ 14 days)	8,000 psi	ASTM D790

518.03 Removal of Unsound Concrete

The following paragraphs are added:

In areas of partial and full depth concrete slab repairs and partial depth excavation, the equipment used for removal of unsound concrete shall be chipping hammers weighing a maximum of 35 pounds and only chisel point bits will be allowed. Care shall be taken during the demolition process to ensure the integrity of the surrounding concrete is maintained. The Contractor shall use great care to avoid damaging the existing reinforcing steel during the demolition process. Existing reinforcing steel damaged during the demolition process shall be repaired or replaced by a method approved by the Resident, at no additional cost to the Authority.

The surface preparation for slab repairs are as follows:

a. Mechanically remove concrete to the limits indicated on the Drawings or directed by the Resident.
b. Remove at least two inches of existing concrete facing and continue removal as required to expose sound aggregate. Substrate should have a minimum amplitude of a 1/4 inch. Use light chipping hammers to prepare surface. Limit the size of chipping hammers to 35 lbs (6.8 kg) to reduce micro fractures.
c. Square cut or under cut perimeter of the area to be repaired according to the Drawings. Do not cut existing steel reinforcement.

d. Where reinforcing steel with active corrosion is encountered, comply with the following:

   1. Tool clean reinforcing steel to remove rust and contaminants.
   2. If half or greater of the diameter of the reinforcing steel is exposed, chip-out behind the reinforcing to a one inch minimum depth.
   3. Splice new reinforcing steel to existing steel where corrosion has depleted the cross section area by 25 percent as approved by the Resident.

e. Thoroughly abrade the roughened surface and exposed reinforcement to remove all bond inhibiting materials such as rust, dirt, and loose chips. Maintain substrate in a saturated surface dry condition.
f. Final cleaning of the prepared surface shall occur no more than 72-hours prior to placement of the concrete repair material.

The following paragraph is added:

All concrete and other material removed shall be recovered from the Project site and disposed of outside the limits of the turnpike right-of-way. The Contractor shall provide the Resident with an affidavit stating the final location of all disposed material and that the material was disposed of in accordance with Chapter 404 of the Maine Department of Environmental Protection Solid Waste Regulations.

The following Subsection is added:

518.04 Reinforcing Steel

The first paragraph is deleted in its entirety and replaced with the following:

All existing reinforcing steel exposed by concrete removal which is to remain in the structure shall be thoroughly cleaned by sandblasting to an SSPC-SP-6, supplemented by chipping hammers or other means as necessary so that the surfaces are free of rust, scale, mortar and other foreign material, and reasonably free of shadows. The sandblast shall be applied at an angle to the bars so that the embedded steel shall be free of rust and other foreign material to 100 percent of its circumferences. Once the existing reinforcement is cleaned, and prior to casting the repair, all new and existing reinforcing steel shall be coated with an approved epoxy bonding agent. The elapsed time between sandblasting application of the approved epoxy bonding agent shall be a reasonable minimum. Heavily deteriorated reinforcing steel shall be replaced as directed by the Resident.

The following paragraph is added to the end of this Subsection:

Where approved by the Resident, exposed reinforcement shall be depressed to provide 1-1/2 inch clear cover of concrete over the top bars. Minimum clear distance under the bottom of reinforcement bars for horizontal repairs, behind reinforcement bars on vertical repairs, and over the top of reinforcement bars on overhead surfaces, shall meet the requirements of Subsection 518.03. Epoxy coated or plastic reinforcing support chairs shall be provided by the Contractor to

support the bars in their specified location. Bars protruding from sound concrete adjacent to a repair area shall be bent up or down within the repair area to obtain the required minimum clear cover.

The following Subsection is added:

518.051 Preparation for Crack Repair

The crack and its surrounding surface, within three inches along each side of the crack, shall be free of oil, solvent, grease, dirt, loose particles, laitance, and foreign matter. Cleaning of above water crack repair areas shall be performed by air blasting, wire brush, and scrapers or other methods approved by the Resident.

Place injection ports along the crack using a high-modulus epoxy adhesive ensuring that injection ports are spaced no more than six inches apart and that the opening of the injection port is not covered by the epoxy. Seal the crack with the epoxy adhesive using a small trowel, by pushing the epoxy into the crack and then feathering the surface so that the epoxy forms a raised profile over the crack and bonds to the adjacent concrete surface. The epoxy adhesive shall cure for the minimum duration recommended by the manufacturer.

518.07 Placing Repair Materials

The following is added after the first paragraph:

All vertical and overhead repair areas shall be formed over the entire surface with quick erecting forms approved by the Resident. The forms shall be held securely in place and be able to withstand the hydrostatic pressure of the fluid concrete of the height to which it is to be placed. Forms shall be built such that the resulting repair will duplicate the original lines of the concrete removed. Form faces shall be of new finished plywood or steel, or other smooth surface as approved by the Resident prior to use. Forms for repair of vertical surfaces will be provided with a top chute, at a maximum spacing of four feet, for providing a compression head of concrete in the form. The overfilled area shall be struck-off flush when forms are removed. Forms shall be placed snugly against the surface of the old concrete at the edges of the patch and shall extend beyond the edges at least three inches. They shall not deflect under the placement of the fresh concrete. Vertical surface repair forms shall remain in place a minimum of 48-hours.

The following paragraphs are added for material batching, mixing and application for pier and abutment repairs:

Batching and mixing:

a. Prepackaged polymer modified mortar shall be mixed and prepared according to manufacturer's instructions.
b. Limitations on time of placement following mixing shall be strictly adhered to.
c. Batching and mixing equipment: This equipment shall be a high pressure, low volume concrete repair pump using the swing tube operating principle.

d. The maximum concrete pressure will be 1,330 psi.
e. The swing tube pump shall be equipped with a pressure reducing valve to reduce the hydraulic pumping pressure and allow the pressure on the forms to be reduced if needed.

Application:

a. Placement techniques – use either "job built" or manufactured form systems to conform to the desired contours of the area to be formed. Apply form release agent or use plastic lined plywood to create a bond breaker at form inner face.
b. Where possible, and at regular intervals, place vents in the form work to monitor material flow and vent excess displaced water.
c. Use a "trap door" or other means to pre-wet the concrete surface to saturated surface dry.
d. Pump the material with a high-pressure, low volume concrete pump. Pump continuously until forms are completely filled. Continue pumping until a 3 to 5 psi increase in normal line pressure is evident and STOP pumping. Form should not deflect. This process may involve multiple valve systems as required to complete the work.
e. Vibrate form while pumping.
f. All vents shall be capped when a steady flow is evident.
g. Leave forms in place during the seven (7) day curing period.

The following paragraphs are added to the end of this Subsection:

Modified Class AAA Concrete may be transit mixed or mixed on-site. The concrete shall be placed in accordance with the provisions of Section 502 except that the pre-plasticized slump shall not exceed three inches. Materials shall be batched by weight. The concrete shall be pumped or hand shoveled into the forms. Internal mechanical vibrators shall be of an approved design and of a size suitable to the work at hand. External vibrators attached to the forms will be permitted if requested, subject to the results obtained. The amount of vibration shall be guided by results obtained from previous placements.

If the concrete cannot be placed satisfactorily, as determined by the Resident, superplasticizers shall be added to the mix as approved by the Resident and at no additional cost to the Authority. After removal of the forms, the concrete shall be smooth rubbed and wet cured and given a smooth rubbed finish.

The following Subsection is added:

<u>518.071 Placing Epoxy Injection Materials</u>

a) Mix epoxy components per manufacturer's instructions. Review pot life characteristics of combined materials and prepare quantities accordingly;
b) Open all injection ports along the crack and ensure that all injection ports are securely fastened to the concrete substrate;

c) Attach injection device to the lowest port on vertical cracks, or the first port in the series on horizontal cracks;
d) Slowly and under constant pressure, inject the epoxy material into the first port until the epoxy flows out of the next port in the series. While maintaining constant pressure and flow at the first port, close the adjacent port and continue injection process until epoxy flows from the subsequent port in the series, or until no additional epoxy can be injected into the first port.
e) Repeat the above procedure until all ports have been injected.

518.10 Method of Measurement

The sixth paragraph is deleted and not replaced.

The following sentences are added:

The quantity of Partial and Full Depth Concrete Slab Repairs will be measured by the square foot and shall be computed as the sum of the products of the average length and width of each area repaired.

The quantity of Concrete Slab Crack Repairs will be measured by the linear foot.

518.11 Basis of Payment

The following paragraphs are added:

Partial Depth Concrete Slab Repairs, and Full Depth Concrete Slab Repairs will be paid for at the Contract unit bid price per square foot for each type of repair; which price shall include, but not necessarily be limited to, removal and disposal of materials; cleaning existing concrete and reinforcing steel; replacing corroded reinforcing steel as directed by the Resident, furnishing, placing and removal of forms, staging, temporary supports where required; placing, curing and finishing new concrete; and, all materials, labor, equipment, tools and incidentals necessary to complete the work. The Contractor shall provide the Resident access in order to identify repair areas.

Concrete Slab Crack Repairs will be paid for at the Contract unit bid price per linear foot; which price shall include, but not necessarily be limited to, cleaning existing concrete; furnishing and installing pressure injection system; placing, curing, and finishing epoxy injection materials; and all secondary materials, labor, equipment, tools and incidentals necessary to complete the work.

Payment will be made under:

Pay Item		Pay Unit
518.64	Concrete Slab Crack Repairs	Linear Foot
518.81	Partial Depth Concrete Slab Repairs Type I	Square Foot
518.82	Partial Depth Concrete Slab Repairs Type II	Square Foot
518.83	Full Depth Concrete Slab Repairs	Square Foot

SPECIAL PROVISION

SECTION 526

CONCRETE BARRIER

(Temporary Concrete Barrier Type I - Supplied by Authority)

526.01 Description

The following paragraphs are added:

This work shall consist of loading, transporting, setting, resetting, removing, transporting and stacking temporary concrete barrier Type I – supplied by Authority of a shape designated on the Plans. The barrier shall have attachments allowing individual sections to be connected into a continuous barrier.

The work also includes supplying connecting pins and furnishing and mounting retro-reflective delineators, per Subsection 526.03, on both Contractor-supplied and Authority-supplied temporary concrete barriers.

Concrete barriers supplied by Authority shall be available at the following location(s):

Maintenance Area	Linear Feet of Barrier
Auburn Maintenance Area Mile 76.9	2,300

Upon substantial completion of work, the Contractor shall remove and transport the concrete barrier - supplied by Authority to back to Auburn Maintenance Area.

526.02 Materials

The following paragraphs are added:

e. Delineators shall be bi-directional with a minimum effective reflective area of eight square inches as approved by the Resident. The reflectors shall be methyl methacrylate and the housing of acrylonitrile butadiene styrene. Color shall be in accordance with the MUTCD.

f. Connecting pins shall be a one inch diameter A36 steel hot rolled round rod that has a four inch long 180 degree bend at the top (“J” shaped). The rod shall be 2’-11” long pre-bend and 2’-7” long post bend.

526.021 Acceptance

The Resident shall have the authority to accept or reject all temporary concrete barrier Type I and temporary concrete barrier Type I – supplied by Authority used on the Project.

526.03 Construction Requirements

The following paragraphs are added:

The Contractor shall notify the Resident prior to the scheduled pick-up and delivery of concrete barrier. No barrier shall be removed from or stacked at the Turnpike's Maintenance Area without approval of the Resident.

The Contractor shall move and place barrier-utilizing methods that will not damage the barrier. Barrier that is damaged by the Contractor by failing to use proper methods shall be replaced by the Contractor at no additional cost to the Authority.

Concrete barrier supplied by the Authority consists of several different styles. Not all barriers may be compatible. The Contractor shall utilize caution when setting barrier to use identical barrier types as adjacent barrier. Non-compatible barrier that cannot be attached together shall be overlapped by a minimum of 10 feet with the blunt end on the non-traffic side of the barrier. This work will not be measured separately for payment, but shall be incidental to the concrete barrier.

Concrete barrier placed at roadway low points shall be shimmed on 1 inch by 2 inch by 2 foot long wood planks to allow drainage to pass under the barrier. In addition, the Resident may direct the Contractor to shim the concrete barrier at other locations to provide for proper roadway drainage. All labor, material, and equipment necessary to shim the barrier will not be measured separately for payment, but shall be incidental to the Concrete Barrier.

Pins connecting the barrier shall be set flush with the top of the barrier.

The removal of concrete barrier from adjacent to the travel lane may be conducted without a lane closure if it is accomplished in accordance with the following requirements:

- Barrier is removed from the trailing end and the workmen and equipment involved in the operation are always behind the barrier. No workmen or equipment shall enter the travel lane.
- Barrier shall be dragged away from the travel lane to at least a 30-degree angle by the use of a cable.
- Barrier shall be lifted no more than six inches while within 10 feet of the travel lane.

Retro-Reflective Delineators shall be mounted as follows:

- One on top of each barrier.
- One on the traffic side of every barrier used in a taper.
- One on the traffic side of every other barrier at regularly spaced intervals and locations.
- Delineators shall be installed on both sides of the barrier if barrier is used to separate opposing traffic.
- Delineators shall be physically adhered so as to withstand the force of throw from a snow plow.
- If more than 25% of delineators in any 50 foot section of barrier fall off for any reason, the Contractor will be responsible for reinstalling all the delineators in that run at that their own cost.
- The Contractor is required to submit the installation method for review and approval to the Resident.

526.04 Method of Measurement

The following paragraphs are added:

Temporary Concrete Barrier Type I – Supplied by Authority shall be measured for payment by the lump sum.

The loading, transporting, setting, resetting, removing, transporting and stacking of the barrier, the furnishing, installation and maintenance of the barrier delineators, and furnishing and installing connector pins will not be measured separately for payment, but shall be incidental to the cost of the Barrier. Temporary storage of Concrete Barrier between construction phases, if required, will not be measured separately for payment, but shall be incidental to the cost of the Barrier. All equipment required to load, unload, transport and stack Concrete Barrier shall be supplied by the Contractor.

Any Barrier lost or damaged by the Contractor shall be replaced by the Contractor at no additional cost to the Authority.

526.05 Basis of Payment

The fifth paragraph is deleted and not replaced.

The following paragraphs are added:

Temporary Concrete Barrier Type I – Supplied by Authority will be paid for at the Contract lump sum price, complete in place. Such payment shall be full compensation for loading, transporting, setting, resetting, temporary storage, removing, transporting and stacking at the area designated, furnishing all materials, and all other incidentals necessary to complete the work. Temporary Concrete Barrier Type I – Supplied by Authority and all connecting pins

shall remain the property of the Authority, and shall be returned to the Turnpike Maintenance Area as designated in Subsection 526.01.

Payment of Concrete Barrier shall be based on a percentage of the work accomplished during that pay period.

Payment will be made under:

Pay Item		Pay Unit
526.306	Temporary Concrete Barrier Type I – Supplied by Authority	Lump Sum

SPECIAL PROVISION

SECTION 526

CONCRETE BARRIER

(Median Barrier Type I, IA, IB, IC, II, III)
(Median Barrier Transition Type I, II)

526.01 Description

This Section is deleted and replaced with the following:

This work shall consist of the furnishing, constructing, erecting, and setting permanent concrete barrier and associated elements in accordance with these Specifications and the lines and grades shown on the Plans or established by the Resident. The length of each precast barrier segment shall be in accordance with the parameters shown on the Plans. The Contractor shall minimize the number of joints in the final barrier assembly to the extent possible.

Median Barrier Type I - Precast Double faced single slope barrier 2'- 0" wide at the base, 48" high and 45" reveal as shown on the Plans.

Median Barrier Type IA - Precast Double faced single slope barrier 2'- 5 ½" wide at the base, 66" high and 45" min. reveal as shown on the Plans.

Median Barrier Type IB – Precast Double faced single slope barrier 2'- 4 3/8" wide at the base, 62" high and 45" min. reveal located on the ORT slab as shown on the Plans.

Median Barrier Type IC – Cast in Place Double faced single slope barrier variable width at the base, variable height and 45" min. reveal located on the existing approach slab to remain shown on the Plans.

Median Barrier Type II – Cast in Place Double faced single slope barrier 4'- 0" wide at the base, 48" high and 45" reveal as shown on the Plans.

Median Barrier Type III - Precast Single faced single slope barrier 1'- 4 ¾" wide at the base, 48" high and 45" reveal as shown on the Plans.

Median Barrier Transition Type I - Precast Section of barrier to transition from double faced single slope barrier to vertical section for guardrail attachment as shown on the Plans.

Median Barrier Transition Type II - Precast Section of barrier to transition from Median Barrier Type I to Median Barrier Type II as shown on the Plans.

526.02 Materials

The second paragraph is deleted in its entirety and replaced with the following:

All concrete Median Barrier and Median Barrier Transitions, except Median Barrier Type IB and II, shall be supplied as precast units produced by an approved commercial precasting plant. Precast concrete shall be Class P, in accordance with Special Provisions, Section 502.05 - Composition and Proportioning, with a minimum compressive strength of 4,500 psi. Cast-in-Place concrete shall be Class AAA-Deck (without synthetic reinforcement) in accordance with Special Provisions, Section 502.05 - Composition and Proportioning, with a minimum compressive strength of 4,500 psi.

Materials for barrier connection assemblies shall be fabricated in accordance with MaineDOT Standard Specification 504. All barrier connection assemblies shall be hot dip galvanized after fabrication in accordance with ASTM A123 and A153.

The second paragraph is amended by the addition of the following:

All reinforcing steel for concrete barrier shall be epoxy coated. Reinforcing steel shall be fabricated and placed in accordance with the Standard Specifications, Section 503.

526.03 Construction Requirements

The first and second paragraphs are deleted and replaced with the following:

All permanent concrete barrier and transition barrier shall be constructed in accordance with the provisions of Special Provision 502 – Composition and Proportioning, through Section 502.15 – Curing Concrete, inclusive, with the following additions:

a. The following is added to Section 502.10 A. – Construction of Forms, after Construction of Forms: "Permanent concrete barrier shall not be formed using slip forming methods. Temporary concrete barrier may be formed by precasting and/or prestressing methods."

The following paragraphs are added after the fourth paragraph:

d. Sections of barrier shall be uniform in color and in good condition, free from cracked or spalled surfaces.

e. Defects shall be divided into two categories, minor defects and major defects. Minor defects in the barrier may be repaired in the field. Major defects shall be cause for rejection of the section or, at the Authority's sole discretion, the section shall be repaired in a manner directed by the Resident.

   Minor defects are defined as holes, honeycombing or spalls which are 6 inch or less, in diameter, and which do not expose the outermost surface of the steel

reinforcement. Surface voids 3/8 inch, or less, in diameter and 3/8 inch, or less, in depth are not considered defects and do not require repair.

Major defects are defined as any defect which does not meet the definition of a minor defect or minor defects which, in aggregate, comprise more than 2% of the surface area of the barrier section.

The repair of hardened concrete shall be as follows:

- Minor Defect Repair: Repair shall be made with a fast set non-shrink patching material included on MaineDOT's list of prequalified materials. Methods of repair shall be acceptable to the Resident. The color of the repaired portion shall match as nearly as practicable, the color of the surrounding concrete. Repaired portions shall match shape and tolerance requirements.

- Major Defect Repair: Major defect repair shall be pre-approved by the Engineer.

The following paragraphs are added at the end of this section:

The layout and placement of the concrete barriers shall be to the alignment and elevations shown on the Plans or as directed. Before any barrier or transitions may be placed, the subbase shall be compacted to 95 percent density and fine graded to a tolerance of +/- 1/2 inch of the true grade at any location under the barrier.

All Cast-in-Place barrier adjacent to precast barriers shall include hardware for the barrier connection as detailed in the Plans.

Median barrier Type IC shall include a bond breaker between existing approach slab and the median barrier.

526.04 Method of Measurement

The following paragraphs are added:

Median Barrier Type I, IA, IB, IC, II, and III will be measured for payment by the linear foot from end to end of each run of barrier measured along the centerline of the barrier complete in place. No deduction in pay length will be made for joints between abutting barrier sections.

Median Barrier Transition Type I and II will be measured by each barrier as shown on the Plans.

526.05 Basis of Payment

The following paragraphs are added:

The accepted quantities of Median Barrier Type I, IA, IB, IC, II, and III will be paid for at the Contract unit price per linear foot, as specified, complete in place. Such payment shall be full compensation for furnishing all material, assembling and all incidentals necessary to complete the work.

The accepted quantities of Median Barrier Transition Type I and II shall be paid for at the Contract unit price per each, as specified, complete in place.

Payment will be made under:

Pay Item		Pay Unit
526.351	Median Barrier Type I - Precast	Linear Foot
526.3511	Median Barrier Type IA - Precast	Linear Foot
526.3512	Median Barrier Type IB - Precast	Linear Foot
526.3513	Median Barrier Type IC - Cast-in-Place	Linear Foot
526.352	Median Barrier Type II - Cast-in-Place	Linear Foot
526.353	Median Barrier Type III - Precast	Linear Foot
526.361	Median Barrier Transition Type I - Precast	Each
526.362	Median Barrier Transition Type II - Precast	Each

SPECIAL PROVISION

SECTION 527

ENERGY ABSORBING UNIT

(Energy Absorbing System (CAT) – Remove and Stack)

527.01 Description

The following sentence is added:

Removing and stacking existing Crash-cushion Attenuating Terminal (CAT) System shall consist of removing the existing CATs at the median opening at Sta. 3370+40 and Sta. 3383+50, transporting and stacking at the Gardiner Maintenance Area Mile 101.8 Northbound.

527.03 Construction Requirements

The Contractor shall make a reasonable effort, as determined by the Resident, to remove all reusable parts prior to stacking.

527.04 Method of Measurement

Energy Absorbing System (CAT) – Remove and Stack will be measured by each unit satisfactorily removed and stacked.

527.05 Basis of Payment

The accepted quantity of Energy Absorbing System (CAT) – Remove and Stack will be paid for at the Contract unit price each satisfactorily removed and stacked. This price shall be full compensation for removing all rails, posts, offset brackets, nuts, bolts, washers, hardware, all labor, transportation and all other incidentals necessary to complete the work.

Payment will be made under:

Pay Item		Pay Unit
527.305	Energy Absorbing System (CAT) – Remove and Stack	Each

SPECIAL PROVISION

SECTION 527

ENERGY ABSORBING UNIT

(Center Barrier Crash Attenuator (FasTRACC))

527.01 Description

This task shall include furnishing, installing and securing the energy absorbing units as described in the Plan drawings and detailed by the vendor. Drawings and general provisions of this Contract, including General Provisions and Special Conditions, apply to work of this Section.

527.02 Materials

Energy absorbing units shall be FasTRACC™ manufactured by Trinity Highway Products, LLC or an approved equal. Units must be fully re-directive, non-gating and suitable for installation on a concrete or asphalt surface. Units shall have the ability to mount to a 2' wide concrete barrier. The energy absorbing units shall be approved at NCHRP Report 350 Test Level 3 with a 70 mph impact speed and must be approved by the Resident.

527.03 Execution

Installation and securing of the energy absorbing units shall be done according to the manufacturer's recommendations so that the unit meets NCHRP Report 350 Test Level 3 with a 70 mph impact speed. Installation must be approved by the Resident.

Basis of Payment

The energy absorbing units will be paid for at the Contract unit price per each which shall include all associated hardware and equipment required for a complete operational system which meets NCHRP Report 350 Test Level 3 with a 70 mph impact speed.

Payment will be made under:

Pay Item		Pay Unit
527.306	Center Barrier Crash Attenuator (FasTRACC)	Each

SPECIAL PROVISION

SECTION 527

ENERGY ABSORBING UNIT

(Work Zone Crash Cushion)

527.01 Description

The first paragraph is deleted in its entirety and replaced with the following:

The Contractor shall furnish and install work zone crash cushions where shown on the Plans, as specified herein, in Special Provision 652, or as approved by the Resident. Work zone crash cushions are required at each exposed end of temporary concrete barrier or guardrail.

The exposed end of the concrete barrier within 30 feet of the mainline travel lane shall be protected at all times. Barrier shall not be reset until after the work zone crash cushion(s) has been set to protect the exposed end of the barrier.

527.02 Materials

The following paragraph is added:

Only work zone crash cushions meeting the NCHRP Report 350 TL-3 crash test requirements may be used on the turnpike and local roadways with posted speeds of 45 MPH or greater. Work zone crash cushions meeting the NCHRP Report 350 TL-2 crash test requirements may be used on local roadways with posted speeds of 40 MPH or less. The Contractor shall provide the Resident with documentation of the proposed work zone crash cushion's NCHRP Report 350 Crash Test Results prior to installation at the jobsite.

527.03 Construction Requirements

The following is added to the end of the first paragraph:

The design speeds for work zone crash cushions shall be 35 mph for local roads and 70 mph for turnpike roadways unless otherwise noted on the Plans.

527.05 Basis of Payment

Payment will be made under:

Pay Item		Pay Unit
527.341	Work Zone Crash Cushions – TL-3	Unit

SPECIAL PROVISION

SECTION 602

PIPE LINING

(Flowable Concrete Fill)

602.01 Description

This work shall consist of providing and placing flowable concrete fill for filling abandoned pipe culverts at locations directed by the Resident.

602.02 Materials

Materials shall conform to the requirements specified in the following Subsections of Division 700 — Materials:

▪ Portland Cement	701.01
▪ Water	701.02
▪ Air Entraining Admixtures	701.03
▪ Water Reducing Admixtures	701.04
▪ Fly Ash	701.10
▪ Fine Aggregate	703.01
▪ Accelerating Admixtures	AASHTO M-194 Type "C"

602.03 Composition and Proportioning

Flowable concrete fill shall be composed of a homogeneous mixture of Portland Cement and/or pozzolans, fine aggregate, water, and chemical admixtures proportioned according to these Specifications.

The flowable concrete fill shall be proportioned to produce a 28 day compressive strength of 110 psi.

The water cement ratio for flowable concrete fill shall not be high enough to cause segregation of the mix.

Air content of five to 15 percent is the target. Higher air contents may be acceptable but will increase set time. All flowable concrete fill shall be air entrained by the addition of an air entraining admixture or other chemical admixtures.

At least 30 days prior to the first placement, a flowable concrete fill mix design shall be submitted by the Contractor to the Resident for approval. No flowable concrete fill shall be placed on the Project until the mix design is approved by the Resident. At a minimum, the mix design submitted by the Contractor shall include the following:

A. Target water cement ratio
B. Target strength
C. Target air content

602.04 Quality Control

Process control measurements of air content, mix temperature, and slump shall be performed on the portion or portions of flowable concrete fill batches delivered to the site. At least one (1) set of measurements for air content, temperature, and slump of flowable concrete fill mix shall be performed per placement or per day, whichever is less frequent. Test cylinders will not be required.

Air content shall be measured following the requirements of AASHTO T152 utilizing Type B equipment.

Slump shall be measured by Modified Slump Test as described below.

Apparatus:

Scoop, measuring tape, flat edge, 3 in. x 6 in. cylinder mold open at both ends, and a flat non-absorbent surface.

Procedure:

1. Set cylinder upright on flat non-absorbent surface.
2. Scoop representative sample of flowable concrete fill.
3. Fill the cylinder, with the sample in one lift without tamping. Strike-off the top with the flat edge to form a level surface.
4. Clear any residue from around the bottom of the cylinder.
5. During a count of three seconds, lift the cylinder straight up allowing the sample to spread on the flat surface.
6. Measure the spread diameter to the nearest 1/2 inch. A spread of nine to 14 inches is considered flowable.

602.05 Batching

Measuring and batching of materials shall be performed at an approved batching plant, either commercial or otherwise.

602.06 Mixing and Delivery

The Contractor shall provide a Certificate of Compliance as described in Standard Specification Section 502, Structural Concrete, Subsection 502.0501, Quality Control METHOD C, for each truckload of flowable concrete fill.

602.07 Cold Weather Placement

The following amended requirements of Standard Specification Section 502, Structural Concrete, Subsection 502.08, Cold Weather Concrete, will apply.

The Cold Weather Temperature Table does not apply to flowable concrete fill. The minimum concrete temperature as placed shall be 40°F. No housing framework or heating will be required when placed under approved cold weather conditions.

602.08 Forms and Containment Berms

When necessary to contain flowable concrete fill within a defined area, berms shall be constructed of compacted granular material.

602.09 Placing Flowable Concrete Fill

Flowable concrete fill shall not be placed until forms and/or containment berms have been checked and approved. Flowable concrete fill shall not be placed under water. The method and sequence of placing flowable concrete fill shall be approved by the Resident before any flowable concrete fill is placed. A technical representative from the flowable concrete fill supplier shall be present during the initial placement.

All flowable concrete fill shall be placed before it has taken its initial set. Flowable concrete fill shall be placed in such a manner as to avoid separation and segregation of the mix. Consolidation, tamping, and vibration is not required or allowed.

Flowable concrete fill shall be discharged directly from the truck into the space to be filled. The drop height of the flowable concrete fill shall be as low as practicable. Flowable concrete fill shall not flow down the vertical face of a trench causing erosion of the trench face. Finishing and curing of flowable concrete fill is not required.

Flowable concrete fill placed will not be opened to traffic or covered with structural concrete or pavement for a minimum of 24-hours.

602.10 Method of Measurement

Flowable Concrete Fill satisfactorily placed and accepted will be measured by the cubic yard, in accordance with the pay limits established, if such limits have been established. If the Contractor elects to omit forms or berms, then any excavation or Flowable Concrete Fill placed beyond the pay limits as indicated on the Plans will not be paid for, but shall be at the Contractor's own expense.

602.11 Basis of Payment

The accepted work done under Flowable Concrete Fill will be paid for at the Contract unit price per cubic yard. Payment will be full compensation for furnishing and placing

Flowable Concrete Fill, including all forms, berms, granular material, pumping, dewatering and necessary incidentals.

Payment will be made under:

Pay Item		Pay Unit
602.30	Flowable Concrete Fill	Cubic Yard

SPECIAL PROVISION

SECTION 603

PIPE CULVERTS AND STORM DRAINS

(Reinforced Concrete Pipe)
(Concrete Collar)

603.01 Description

The following paragraphs are added:

This work shall also consist of furnishing and installing Class III reinforced concrete pipe at the locations as shown on the Plans or as approved by the Resident. These pipes shall meet the requirements of Subsection 706.02.

This work also consists of furnishing and installing a concrete collar to join the existing concrete pipe to the proposed concrete pipe in accordance with the details as shown on the Plans. The Contractor shall note that the concrete pipe ends may be of different sizes and may not fit snugly together.

603.11 Method of Measurement

The following paragraph is added:

The Concrete Collar shall be measured by each unit installed, complete in place and accepted. This shall be full compensation for furnishing labor and materials to construct a Concrete Collar to connect the existing and proposed pipe ends in a working like manner.

603.12 Basis of Payment

Concrete Collars will be paid for at the Contract unit price each regardless of the size of the existing and proposed pipes.

Payment will be made under:

Pay Item		Pay Unit
603.155	12 inch Reinforced Concrete Pipe - Class III	Linear Foot
603.165	15 inch Reinforced Concrete Pipe - Class III	Linear Foot
603.175	18 inch Reinforced Concrete Pipe - Class III	Linear Foot
603.195	24 inch Reinforced Concrete Pipe - Class III	Linear Foot
603.28	Concrete Collar for Reinforced Concrete Pipe	Each

SPECIAL PROVISION

SECTION 604

MANHOLES, INLETS AND CATCH BASINS

(Catch Basin)

604.01 Description

This work shall consist of furnishing and installing new catch basins.

604.02 Materials

The following sentences are added:

Catch Basin Frames and Grates shall be as outlined below and be manufactured by EJ Company of Brockton, Massachusetts or an approved equal and shall meet or exceed the AASHTO M306 Loading Requirements.

Catch Basin Frames shall be eight inch frames unless otherwise specified by the Plans or approved by the Resident with the following product numbers:

5521Z - 8 Inch Frame Product Number 00552111
5546Z - 6 Inch Frame Product Number 00554611
5544Z - 4 Inch Frame Product Number 00554411

Catch Basin Grates shall be a square holed grate as manufactured by EJ Company of Brockton, Massachusetts (or an approved equal) with the following product number:

5520M5 Grate Product Number 00552060

SPECIAL PROVISION

SECTION 604

MANHOLES, INLETS AND CATCH BASINS

(Rebuild Catch Basin to Grade - Type II)
(Rebuild Catch Basin to Grade - Type IV)

604.01 Description

This Subsection is amended by the addition of the following:

The Type II work shall consist of rebuilding catch basins as specified in the Specifications to grade, removing the existing unsound concrete, frame and grate, applying a bead of Elastomeric sealer to the frame seat and reinstalling the existing grate in accordance with these Specifications and in reasonable close conformity with the lines and grades as shown on the Plans.

The Type IV work shall consist of rebuilding catch basins as specified in the Specifications to grade, removing the existing unsound concrete, frame and grate, and reinstalling the existing frame and grate in accordance with these Specifications and in reasonable close conformity with the lines and grades as shown on the Plans.

604.02 Materials

The following sentences are added:

Elastomeric sealer shall be Sikaflex 1a as manufactured by Sika or an approved equal.

Class AAA concrete shall conform to Subsection 502.05; except that the minimum cement factor shall be 750 pounds per cubic yard and the coarse aggregate size shall conform to ASTM C33 Grading 7.

Catch Basin Frames and Grates shall be as outlined below and be manufactured by EJ Company of Brockton, Massachusetts or an approved equal and shall meet or exceed the AASHTO M306 Loading Requirements.

Catch Basin Frames shall be 8 inch frames unless otherwise specified by the Plans or approved by the Resident with the following product numbers:

5521Z - 8 Inch Frame Product Number 00552111
5546Z - 6 Inch Frame Product Number 00554611
5544Z - 4 Inch Frame Product Number 00554411

Catch Basin Grates shall be a square holed grate as manufactured by EJ Company of Brockton, Massachusetts (or an approved equal) with the following product number:

5520M5 Grate Product Number 00552060

604.04 Altering, Adjusting, and Rebuilding Catch Basins and Manholes

This Subsection is deleted and replaced with the following:

When adjusting the existing catch basins they shall be dismantled sufficiently to allow reconstruction in accordance with the following requirements and as shown on the Plans:

Any frame or grate damaged by the Contractor's operations shall be replaced by the Contractor at no additional cost to the Authority. Replacement frame and grate shall meet the requirements of Subsection 604.02 – Type M. Damaged frames and grates shall become the property of the Contractor and shall be removed from Turnpike property.

Rebuild Catch Basin to Grade – Type II

The existing frame and grate shall be removed, stacked and reset. Remove all unsound concrete and anchor rods shall be removed to sound concrete as determined by the Resident. Install four Number 4 dowels, twelve inches in length, in each sidewall, reform catch basin to necessary grade using Class AAA concrete. The existing frame shall be reinstalled to the pavement grade as determined by the Resident.

Prior to installation of the grate, the frame shall be cleaned to accept a bead of elastomeric sealer. Sealer shall be placed in a continuous bead over the horizontal surface in accordance with the manufacturer's recommendation. The existing grate shall be reinstalled and allowed to set for a minimum of 1-1/2-hour before receiving traffic loads.

Rebuild Catch Basin to Grade – Type IV

The existing frame and grate shall be removed, stacked and reset. Remove all unsound concrete and anchor rods to sound concrete as determined by the Resident. Install four Number 4 dowels, twelve inches in length, in each sidewall, reform catch basin to necessary grade using Class AAA concrete. Reinstall the existing frame and grate to the finished grade as designated by the Resident and construct a bituminous concrete waterway including regrading or raising the drainage swale with gravel borrow.

The Contractor shall remove unsound concrete (two inches minimum) from the existing floor slab and replace if directed by the Resident. Existing sumps shall be retained in the basin. Prior to placement of the concrete, the catch basin floor and walls shall be cleaned of all debris, loose and foreign materials to the satisfaction of the Resident.

604.05 Method of Measurement

The following are added after Subsection e. Grate:

Rebuild Catch Basin to Grade – Type II will be measured for payment by each unit rebuilt, secured and accepted.

Rebuild Catch Basin to Grade – Type IV will be measured for payment by each unit rebuilt, secured and accepted.

Each unit includes removing and replacing a depth up to 12 inches from the bottom of the frame to the top of sound concrete in the wall. Each six inches of concrete removed and replaced over 12 inches will be measured for payment as one eighth (1/8) of a unit. Depth measurements in excess of the dimensions authorized will not be included.

604.06 Basis of Payment

The following paragraphs are added after the first paragraph:

The accepted quantity of Rebuild Catch Basin to Grade – Type II will be paid for at the Contract unit price each. This price shall be full compensation for removing existing frame and grate, rebuilding the catch basin top to grade, reinstalling the existing frame, cleaning the horizontal surface, applying the elastomeric sealer, reinstalling the existing grate, and all other labor, equipment and materials required to complete the work.

The accepted quantity of Rebuild Catch Basin to Grade – Type IV will be paid for at the Contract unit price each. This price shall be full compensation for removing existing frame and grate, rebuilding the catch basin top to grade, reinstalling the existing frame and grate, and all other labor, equipment and materials required to complete the work.

The second paragraph is deleted and replaced with the following:

Excavation and backfill will not be measured separately for payment, but shall be incidental to the following pay items.

Bituminous concrete waterways shall be paid for under Item 459.061.

Sawing bituminous pavement will not be measured separately for payment, but shall be incidental to the related drainage items.

Payment will be made under:

Pay Item		Pay Unit
604.184	Rebuild Catch Basin to Grade – Type II	Each
604.186	Rebuild Catch Basin to Grade – Type IV	Each

SPECIAL PROVISION

SECTION 606

GUARDRAIL

(Bridge Transition – Type III)
(Bridge Transition – Type III, Modified)

606.01 Description

The following sentence is added:

This work shall consist of furnishing and installing Type III guardrail bridge attachments as shown on the Plans. Bridge Transition – Type III shall be for transitioning between median barrier and w-beam guardrail and Bridge Transition – Type III, modified shall be for transitioning between median barrier and thrie-beam guardrail as shown on the Plans.

606.08 Method of Measurement

The following sentences are added:

Bridge Transition – Type III and Bridge Transition – Type III, Modified will be measured by each unit of the type specified, installed and accepted.

Curbing is not included in the Bridge Transition pay item but will be measured separately for payment under Special Provision Section 609.

606.09 Basis of Payment

The following paragraphs are added:

Bridge Transition – Type III and Bridge Transition – Type III, Modified will be paid for at the Contract unit price each complete in place and shall be full compensation for furnishing all labor, equipment and materials necessary to complete the work consisting of, but not necessarily limited to, the following: furnishing and installing guardrail, one terminal connector, including terminal connector anchorage and all other detailed accessories; furnishing and installing all required posts, rails, offset brackets, back-up plates, nuts, bolts, washers, and all other items necessary to make for a complete installation as shown on the Plans or as approved by the Resident.

Payment will be made under:

Pay Item		Pay Unit
606.1723	Bridge Transition - Type III	Each
606.1724	Bridge Transition - Type III, Modified	Each

SPECIAL PROVISION

SECTION 606

GUARDRAIL

(Guardrail Beam)

606.01 Description

The following paragraph is added:

This work shall consist of furnishing and installing proposed guardrail W-beam panels (RE-3) to replace existing damaged and rusty panels as approved by the Resident. The Contractor shall mark rail to be replaced for Resident's approval prior to the replacement of the rail.

606.02 Materials

The following sentence is added:

The materials for the W-beam panels shall conform to Subsection 710.04.

606.08 Method of Measurement

The following sentence is added:

Guardrail Beams shall be measured per linear foot installed and accepted.

606.09 Basis of Payment

The following paragraph is added:

The Guardrail Beams will be paid for at the Contract unit price per linear foot complete in place and shall be full compensation for furnishing all labor, equipment and materials necessary to complete the work. This work shall consist of furnishing and installing the new W-beam panels, all hardware, nuts, bolts, washers, and all other items necessary to complete the installation and connection to the posts.

SPECIAL PROVISION

SECTION 606

GUARDRAIL

(Terminal End – Anchored End)

606.01 Description

The following sentence is added:

This work shall also consist of furnishing and installing terminal end – anchored end, end treatments in accordance with these Specifications, the AASHTO-AGC-ARBTA Joint Committee Task Force 13 Report: A Guide to Standardized Highway Barrier Hardware, dated May 1995; and in reasonably close conformity with the lines and grades as shown on the Plans or as approved by the Resident.

606.02 Materials

The following sentence is added:

The guardrail elements shall be per the Components' List found on Sheet No. 2 of 2 of Drawing SEW02a – Trailing End Terminal – Foundation Tube Option in the Task Force 13 Report noted above.

The following Subsection is added:

606.042 Terminal End – Anchored End

Installation of the terminal end – anchored end shall be in strict accordance with the AASHTO-AGC-ARBTA Joint Committee Task Force 13 Report and the Details on Sheet No. 1 of 2 of Drawing SEW02a – Trailing End Terminal – Foundation Tube Option.

606.08 Method of Measurement

The second paragraph is amended by the addition of: ", Terminal End – Anchored End," after the words "breakaway cable terminal".

606.09 Basis of Payment

The second paragraph is amended by the addition of: ", Terminal End – Anchored End," after the words "breakaway cable terminal".

Payment will be made under:

Pay Item		Pay Unit
606.278	Terminal End – Anchored End	Each

SPECIAL PROVISION

SECTION 606

GUARDRAIL

(Delineator Post)
(Remove and Reset Delineator Post)

606.01 Description

The following paragraphs are added:

This work shall also consist of furnishing and installing new delineator posts and/or removing and resetting existing delineator posts within the Contract limits. The existing reflectorized delineator panels on reset posts shall be removed and replaced with new reflectorized delineator panels as required by the Resident.

Existing and reset delineator posts shall be located as follows:

Outside Shoulder:

- One at guardrail trailing ends (green delineator).
- Two at guardrail approach ends (red delineators at face end and first angle point, FLEAT red on traffic side).
- One at guardrail attachments to endposts (white delineator).

Median:

- One at guardrail trailing ends (green delineator).
- Two at guardrail approach ends (red delineators at face end and first angle point, CAT or FLEAT MT red on both sides).
- One at guardrail attachments to endposts (yellow delineator).

Other Locations:

- One at culvert outlets (red delineator).
- Twenty per mile evenly spaced at the edge of outside shoulder (white delineator).
- One at electrical junction boxes not associated with another item (blue delineator).

Delineator posts that do not exist in the locations described above, shall be supplied and installed by the Contractor. The installation of the delineator post shall include the demountable reflectorized delineator.

Delineator posts shall be bolted to the back of the first wood post in the FLEAT 350's, CAT systems and FLEAT MT systems.

606.02 Materials

The following paragraphs are added:

Non-guardrail guardrail delineator posts shall conform to Subsection 606.02.

Guardrail delineator posts for the approach ends of 350 compliant end treatments shall be fabricated of a flexible, durable, non-discoloring polyethylene plastic capable of recovering from repeated impacts and resistant to solar degradation. The posts shall be a minimum of two inches in diameter, shall be ovalized at the top of the post to allow application of reflective sheeting, and shall be a maximum length of 36 inches. Color of the guardrail delineator posts shall be grey. Posts shall be capped at the top with a flexible rubber cap; Safe-Hit Flexible Guardrail Delineator Post or an approved equal.

Reflective sheeting shall be applied to the top of the post and the color of the sheeting shall be as described in section 606.01. Dimensions of sheeting shall be three inches by eight inches and shall conform to ASTM Type XI; 3MTM Diamond GradeTM DG3 Reflective Sheeting Series 4000 or an approved equal.

Guardrail delineator posts shall be fastened to guardrail posts with two fasteners. For wooden posts, two 3 inch by 3/8 inch lag screws with 5/8 inch flat washers shall be used. For steel guardrail posts, two self-drilling 1/4 inch by two inch screws with 5/8 inch flat washers shall be used.

The demountable reflectorized delineator panel shall meet the requirements of Subsection 719.06. Delineator panel shall be rectangles measuring eight inch x three inch.

606.03 Posts

The following paragraphs are added:

The installation of delineator posts shall conform to Subsection 606.03 for guardrail delineator posts.

The top of delineator posts associated with guardrail shall be installed 5’-0” (60 inches) above edge of pavement elevation. White delineator posts for mile delineation shall be 4’-6” (54 inches) above edge of pavement elevation. Delineators shall be installed four feet from edge of pavement except those delineating end treatments, culverts and electrical items.

Mile marker post shall be mounted on breakaway supports. The bottom of the sign shall be five feet from the solid white line and shall be offset five feet from the edge of pavement.

A mock-up of the guardrail delineator posts shall be submitted to the Resident for approval prior to installation.

Any materials damaged by the Contractor's operations shall be replaced at no additional cost to the Authority.

Top of the delineator panel shall be flush with the top of post.

606.08 Method of Measurement

The following paragraphs are added:

Delineator Posts shall be measured by each unit installed and accepted. Delineator Posts Removed and Reset will be measured by each unit satisfactorily reset.

Mile Marker post shall be measured for payment as Delineator Post.

606.09 Basis of Payment

The following sentences are added:

The accepted quantity of Delineator Posts will be paid for at the Contract unit price per each which price shall be full compensation for the post, specified delineator or mile marker panel, complete in place.

The accepted quantity of Delineator Posts Removed and Reset will be paid for at the Contract unit price each, which price shall be full compensation for removing and resetting delineator panel or mile marker panel and posts and all incidentals necessary to complete the work.

Payment will be made under:

Pay Item		Pay Unit
606.353	Delineator Post	Each
606.354	Delineator Post - Remove and Reset	Each

SPECIAL PROVISION

SECTION 606

GUARDRAIL

(Guardrail – Remove, Modify and Reset)

606.01 Description

The following paragraphs are added:

This work shall consist of removing existing guardrail elements, component parts and hardware modifying and resetting as single or double rail.

New non-wood offset blocks conforming to NCHRP 350 Test Level 3 shall be installed on all guardrail being reset. The existing steel offset brackets and backup plates shall become the property of the Contractor.

The following Subsection is added:

606.021 General

The modified guardrail shall be installed in accordance with the applicable provisions of the Standard Specifications.

The materials removed shall be utilized in the reset guardrail locations with the following exceptions:

- Existing guardrail posts found to be unfit for reuse, in the opinion of the Resident, prior to or upon pulling;
- Existing steel backup plates when present;
- Existing steel offset brackets shall be replaced with non-wood offset blocks; and,
- Existing W-beam rail elements damaged by traffic and unfit for reuse, in the opinion of the Resident.

This work shall include all modifications to the existing guardrail system that may be necessary to install new non-wood offset blocks including, but not necessarily limited to, the drilling of new holes in the existing posts and cleaning and painting holes with a cold-applied zinc-rich paint. The completed guardrail assembly shall conform to NCHRP 350 Test Level 3.

Existing guardrail components removed, but not reset because of damage, shall become the property of the Contractor. Any materials lost or damaged by the Contractor's operations shall be replaced at no additional cost to the Authority.

Earth around each reset post shall be raked and compacted with a minimum eight pound hand tamper or an approved device. Holes created due to resetting a post shall be filled with a similar surrounding material and compacted.

606.08 Method of Measurement

The following paragraphs are added:

Guardrail – Remove, Modify and Reset will be measured on a linear foot basis, from center-of-post to center-of-post, for the amount of rail satisfactorily reset.

Steel posts to replace damaged posts shall come from the stockpile of guardrail components to be disposed of, from this Contract and will not be measured separately for payment. If, in the opinion of the Resident, there are no suitable steel posts in the stockpile then steel posts will be measured for payment.

W-beam rail elements to replace damaged rail elements shall come from the stockpile of guardrail to be disposed from this Contract and will not be measured separately for payment. If, in the opinion of the Resident, there are no suitable W-beam rail elements in the stockpile then W-beam rail elements will be measured for payment.

606.09 Basis of Payment

The following paragraphs are added:

The accepted quantity of Guardrail - Remove, Modify and Reset will be paid for at the Contract unit price bid per linear foot. Such payment shall be full compensation for removing, stock piling, modifying, and resetting guardrail, drilling holes in existing posts, and all equipment, labor and incidentals necessary to complete the work including any necessary modifications to the existing posts.

Furnishing and installing non-wood offset blocks will not be measured separately for payment, but shall be incidental to Item 606.3606, Guardrail - Remove, Modify and Reset, Double Rail.

New steel posts, when measured for payment, will be paid for under Item 606.48, Single Galvanized Steel Post.

New W-beam rail components, when measured for payment, will be paid for under Item 606.178, Guardrail Beam.

Payment will be made under:

Pay Item		Pay Unit
606.3606	Guardrail - Remove, Modify and Reset, Double Rail	Linear Foot

SPECIAL PROVISION

SECTION 606

GUARDRAIL

(Guardrail – Remove, Stack and Dispose)

606.01 Description

The following paragraph is added:

This work shall consist of removing, stockpiling for reuse, and disposing of 'unsuitable for reuse' existing single and double guardrail elements, component parts and hardware as approved by the Resident. Existing guardrail, component parts and hardware suitable for reuse shall be stacked on-site and reused within the project limits as approved by the Resident per Specification 606.3605. At the completion of the Contract, any unused guardrail elements, posts, component parts and hardware suitable for reuse as approved by the Resident shall be transported and stacked at the Authority's Maintenance yard in Gardiner. All remaining existing unsuitable guardrail elements, posts, component parts and hardware shall become the property of the Contractor and shall be removed from turnpike property.

606.08 Method of Measurement

The following paragraph is added:

Guardrail remove, stack, and dispose will be measured on a linear foot basis of guardrail satisfactorily Removed, Stacked and/or Disposed whether single rail or double rail. Double twisted end sections will be measured for payment on a linear foot basis as 25 feet of guardrail removed.

606.09 Basis of Payment

The following paragraphs are added:

The accepted quantity of guardrail remove, stack and dispose will be paid for at the Contract unit price bid per linear foot, which price shall be full compensation for removing, stacking, transporting and disposing all guardrail elements, component parts and hardware, equipment, labor and all incidentals necessary to complete the work. No additional payment will be made for double rail. Stockpiling existing rail elements, posts, and component parts will not be measured separately for payment, but shall be incidental to Item 606.3631.

Payment will be made under:

Pay Item		Pay Unit
606.3631	Guardrail – Remove, Stack and Dispose	Linear Foot

SPECIAL PROVISION

SECTION 606

GUARDRAIL

(Single Offset Block – W-Beam)

606.01 Description

The following paragraph is added:

This work shall consist of furnishing and installing single offset blocks at all existing guardrail beam locations that are part of a remove, modify and reset location. New non-wood offset block will be installed on existing galvanized steel posts and connected to Guardrail Type 3d.

606.02 Materials

The following sentence is added:

Offset block shall have passed NCHRP 350 Test Level 3 and shall not be wood.

The following Subsection is added:

606.021 General

The existing median guardrail posts have four off-center bolt holes used to attach the existing steel offset blocks. The new offset blocks have two bolt holes centered on the W-beam section. The existing posts must be retrofitted to receive the new non-wood offset block assembly. Additional bolt holes required in the existing posts shall be drilled or punched but the size shall not exceed the dimension given by the manufacture. Metal around the holes shall be cleaned and painted with a cold-applied zinc-rich paint. The holes shall not be burned with a torch.

The completed guardrail system shall be in conformance with the NCHRP 350 Test Level 3 requirements.

606.08 Method of Measurement

The following paragraph is added:

Single Offset Block shall be measured per each unit installed and accepted. All equipment and labor associated with retrofitting the existing posts shall be incidental to Item 606.471.

606.09 Basis of Payment

The following paragraph is added:

New Single Offset Block furnished and installed at specified locations will be paid for at the Contract unit price each complete in place and accepted. Payment shall be full compensation for furnishing all labor, equipment and materials necessary to complete the work including, but not necessarily limited to, removal of existing rail beam, removal and disposal of existing offset block, drilling new holes in existing post, application of galvanized paint, furnishing and installing new non-wood offset block, removal and disposal of back-up plates, and resetting the rail beam.

Payment will be made under:

Pay Item		Pay Unit
606.471	Single Offset Block – W-Beam	Each

SPECIAL PROVISION

SECTION 606

GUARDRAIL

(Asymmetrical Thrie Beam Transition)

606.01 Description

The following paragraph is added:

This work shall consist of removing and stacking existing thrie beam transition panels, furnishing and installing the asymmetrical thrie beam to W-beam transition, single rail - modified section and double rail modified section, connecting it to the existing or proposed W-Beam guardrail and thrie beam modified at locations on the Maine Turnpike, as shown on the Plans or as approved by the Resident. All guardrail components shall have passed the NCHRP 350 Test Level 3. Composite offset blocks shall be used.

606.08 Method of Measurement

The following sentence is added:

Asymmetrical Thrie Beam Transition shall be measured by each unit installed and accepted. The double rail transition consists of two units, one on each side.

606.09 Basis of Payment

The following paragraphs are added:

Asymmetrical Thrie Beam Transition will be paid for at the Contract unit price each complete in place, and shall be full compensation for furnishing all labor, equipment and materials necessary to complete the work consisting of, but not necessarily limited to, furnishing and installing the Asymmetrical Thrie Beam to W-beam Transition, Single Rail - Modified section and Double Rail – Modified Section, and all detailed accessories; furnishing and installing all required posts, modified steel, wood or composite offset blocks, cables, nuts, bolts, washers, and all other items necessary to complete the installation and connection to the existing or proposed W-Beam and the Thrie Beam – Modified.

Payment will be made under:

Pay Item		Pay Unit
606.701	Asymmetrical Thrie Beam Transition	Each

SPECIAL PROVISIONS

SECTION 606

GUARDRAIL

(Widen Shoulder for Guardrail 350 Flared Terminal)

606.01 Description

The following sentence is added:

This work shall consist of widening the existing shoulder at all Guardrail 350 Flared Terminal locations by excavating, furnishing, grading and compacting new shoulder aggregate subbase course gravel, granular borrow, and common borrow in accordance with the thickness and typical sections as shown on the Plans or as approved by the Resident.

The following Subsections are added:

606.021 Granular Borrow

Granular borrow shall be material meeting the requirements of Subsection 703.19.

606.022 Fill Material

Fill material shall be existing excavation or common borrow from an outside source.

606.024 Aggregate Subbase Course-Gravel

Aggregate subbase course-gravel shall be material meeting the requirements of Subsection 703.06.

60.08 Method of Measurement

The following sentence is added:

The quantity of Widen Shoulder for Guardrail 350 Flared Terminal measured for payment will be per each at locations noted on the Plans.

The quantity of Common Borrow- Truck Measure, Hot Mix Asphalt, Loam, Seed, Mulch and Erosion Control Blanket will be paid under their respective items.

606.09 Basis of Payment

The following paragraphs are added:

The accepted quantity of Widen Shoulder for Guardrail 350 Flared Terminal shall also include the excavation, aggregate subbase course gravel and granular borrow.

Payment will be made under:

Pay Item		Pay Unit
606.754	Widen Shoulder for Guardrail 350 Flared Terminal	Each

SPECIAL PROVISION

SECTION 606

GUARDRAIL

(Guardrail 350 FLEAT Terminal)

606.01 Description

The following sentence is added:

This work shall also consist of furnishing and installing a Guardrail 350 FLEAT (Flared Energy Absorbing Terminal) as manufactured by Road Systems, Inc., 1507 East 4th Street, Big Spring, Texas 79720, (915) 263-2435, and retroreflective adhesive sheeting in accordance with these Specifications and in reasonably close conformity with the lines and grades as shown on the Plans or as approved by the Resident.

606.02 Materials

The following sentence is added:

The retroreflective sheeting shall meet the requirements of Subsection 719.01, Reflective Sheeting – Minimum ASTM, Type VII.

The following Subsections are added:

606.03 Posts

Wood offset blocks shall be toe-nailed to the wood post to prevent the blocks from moving.

606.041 Reflective Sheeting

The color for the reflective sheeting shall be silver (white) when installed on the outside shoulder.

606.08 Method of Measurement

The second paragraph is amended by the addition of: “Guardrail 350 FLEAT Terminal” after the words “breakaway cable terminal”.

606.09 Basis of Payment

The second paragraph is amended by the addition of: “and Guardrail 350 FLEAT Terminal” after the words “breakaway cable terminal”.

The retroreflective sheeting will not be measured separately for payment, but shall be incidental to the Guardrail 350 FLEAT Terminal item.

Payment will be made under:

Pay Item		Pay Unit
606.80	Guardrail 350 FLEAT Terminal	Each

SPECIAL PROVISION

SECTION 607

FENCES

(Chain Link Fence - 3' High)
(Post Assemblies for Chain Link Fence - 3' High)

607.01 Description

This Subsection is amended by the addition of the following:

This work shall consist of fabricating and erecting 3'-0" high barrier mounted chain link fence and barrier mounted post assemblies for support of chain link fence and/or road signs as shown on the Plans.

607.02 Materials

This Subsection is amended by the addition of the following:

All materials for the chain link fence and Post Assemblies shall be hot dip galvanized after fabrication in accordance with ASTM A123 or A153 as applicable.

All anchor bolts shall be drilled and anchored into concrete barrier using an approved chemical anchoring material selected from the MaineDOT list of qualified anchoring materials. The use of cementitious grouts will not be allowed.

607.06 Method of Measurement

This Subsection is amended by the addition of the following:

Post Assemblies for Sign or Chain Link Fence shall be measured by each unit satisfactorily fabricated and installed.

607.07 Basis of Payment

This Subsection is amended by the addition of the following:

Payment for Post Assembly for Sign or Chain Link Fence shall include furnishing and installing anchor rods and related hardware required to fasten the post assemblies to the precast barrier.

Payment will be made under:

Pay Item		Pay Unit
607.40	Chain Link Fence - 3' High	Linear Foot
607.41	Post Assembly for Sign or Chain Link Fence	Each

SPECIAL PROVISION

SECTION 609

CURBING

(Concrete Curb Type 2)

609.01 Description

The following sentences are added:

This work shall consist of furnishing and installing Concrete Curb Type 2 in accordance with these Specifications and in reasonably close conformity with the lines, grades and locations as shown on the Plans or as approved by the Resident.

This work shall also consist of all excavation and backfill necessary to install the proposed curb as shown on the Plans.

609.02 Materials

The following sentence is added:

Backfill shall be Aggregate Subbase Course Gravel Type D in conformance with Subsection 304.02.

609.19 Method of Measurement

The following sentences are added:

Concrete Curb Type 2 shall be measured by the linear foot along the front face of the curb at the elevation of the finished grade, complete in place and accepted.

Excavation and backfill associated with curb installation shall be incidental to Item 609.191, Concrete Curb Type 2.

609.10 Basis of Payment

Payment will be made under:

Pay Item		Pay Unit
609.191	Concrete Curb Type 2	Linear Foot

SPECIAL PROVISION

SECTION 610

STONE FILL, RIPRAP, STONE BLANKET AND STONE DITCH PROTECTION

(Stone Check Dams)

610.01 Description

Paragraph (f) is deleted and replaced with the following:

(f) Stone Ditch Protection - Machine placed stones on an earth or granular bedding at stone line ditches, stone downspouts and stone check dams.

This work shall also include the placement, removal and storage of the stone used for temporary and/or permanent stone check dams.

610.032 Placing Stones

The following paragraph is added:

Stone check dams shall be constructed in accordance with the details as shown on the Plans or as approved by the Resident. The stone shall be placed in one operation without special handling or handwork except to create a low point along the top gradient above the ditch flow lines.

The following Subsection is added:

610.033 Removing Stone

The stone for temporary stone check dams shall be removed after vegetation has been established in the ditches as approved by the Resident.

Any damage to the slopes and ditches caused by the removal of the stone check dams shall be repaired by the Contractor at his own expense.

The area directly under the temporary stone check dams shall be loamed, seeded and mulched immediately after the removal of the stone check dams. The loam, seed and mulch will be measured for payment under the appropriate pay items.

Stone used for temporary stone check dams shall be removed and stored and shall become the property of the Contractor at the completion of the Project.

The following Subsection is added:

610.034 Maintenance

Stone check dams shall be maintained by the Contractor. Sediment deposits behind check dams shall be removed when the depth of sediment reaches 50 percent of the check dam height.

610.05 Method of Measurement

The following paragraphs are added:

Stone for Permanent Stone Check Dams will be measured by the cubic yard complete in place.

Stone for Temporary Stone Check Dams will be measured by the cubic yard complete in place. The removal and storage of the stone will not be measured separately for payment, but shall be incidental to the Temporary Stone Check Dam item. This shall include the transporting and unloading of the stone. If this stone is reused on the Project, it will be measured for payment under the appropriate pay item.

The removal and disposal of sediment from behind the Temporary Stone Check Dams will not be measured separately for payment, but shall be incidental to the Stone Check Dam item.

610.06 Basis of Payment

The following sentences are added:

The accepted quantities of stone for Temporary and/or Permanent Stone Check Dams will be paid for at the Contract unit price per cubic yard.

Excavation will not be required for the placement of stone for Stone Check Dams.

Payment will be made under:

Pay Item		Pay Unit
610.181	Temporary Stone Check Dam	Cubic Yard

SPECIAL PROVISION

SECTION 619

MULCH

619.01 Description

The first paragraph is modified by the addition of the following:

"as a temporary or permanent erosion control measure" after the word "mulch".

619.03 General

The first paragraph is deleted and replaced with the following:

Cellulose fiber mulch shall not be used within 200 feet of a wetland or stream. The limits shall be 200 feet upstation and downstation of the wetland or streams as well as the slopes adjacent to the stream. The application of hay or straw mulch with an approved binder shall be used at these locations to prevent erosion.

The use of cellulose fiber mulch will only be allowed at other areas with the approval of the Resident. The Contractor may be required to demonstrate that the material may be applied in a manner that will prevent erosion and will aid in the establishment of permanent vegetation. The Resident reserves the right to require the use of hay or straw mulch at all locations if he determines that the cellulose mulch is ineffective. Cellulose fiber mulch is not acceptable for winter stabilization.

619.04 Applying Mulch

The third paragraph is deleted and replaced with the following:

Newly disturbed earth and ditches shall be mulched or otherwise stabilized by the end of each work day and maintained on a daily basis as described in Subsection 105.8.1.11 (b) in the Special Provisions. The Contractor is responsible for applying temporary mulch as necessary, in accordance with the latest edition of the BMP's, to minimize soil erosion prior to the application of the final slope treatment.

Temporary mulch applied during the winter months of November 1st through April 15th shall be applied at twice the standard temporary stabilization rate or 150 lbs. per 1,000 square feet or three tons/acre. Mulch shall not be spread on top of snow and shall be anchored with mulch netting on slopes steeper than eight percent unless erosion control blankets or erosion control mix is being used on the slopes.

The Contractor shall review his construction operations and staging to determine how much temporary mulching is required.

619.06 Method of Measurement

The following sentence is added:

Temporary Mulch will be paid for by the lump sum.

619.07 Basis of Payment

The following paragraphs are added:

Temporary Mulch will be paid for at the Contract price per lump sum which shall be full compensation for furnishing and spreading the Temporary Mulch as many times as necessary as determined by the Contractor's operations and staging. The price shall also include the additional mulch netting and snow removal necessary during the winter months.

Payment will be made under:

Pay Item		Pay Unit
619.1202	Temporary Mulch	Lump Sum

SPECIAL PROVISION

SECTION 626

FOUNDATIONS, CONDUITS, AND JUNCTION BOXES FOR HIGHWAY SIGNING, LIGHTING, AND SIGNALS

(18-Inch Diameter Drilled Shaft)
(36-Inch Diameter Drilled Shaft)
(36-Inch Diameter Drilled Shaft – Rock Socket)

626.01 Description

The following paragraphs are added:

The work shall consist of furnishing and placing reinforced drilled shafts within the ORT toll plaza at the locations shown on the Plans. There are two sizes of drilled shafts required on this project: 36-inch diameter drilled shafts with steel reinforcement and rock sockets; and 18-inch diameter drilled shafts with GFRP reinforcement in end-bearing.

626.021 General

The following are added:

Steel Reinforcing	Section 503
GFRP Reinforcing	Special Provision 503

626.022 Equipment List and Drawings

The following are added:

A. Submittals

All submittals shall be made in accordance with Subsection 105.7 of these Specifications.

1. Construction Experience Submittal

Prior to the start of shaft construction, the Contractor shall electronically submit a project reference list to the Resident for approval verifying the successful completion by the Contractor of at least three separate foundation projects with shafts of diameters and depths similar to or larger than those shown in the Plans, and ground conditions similar to those identified in the Contract. A brief description of each listed project shall be provided along with the name and current phone number of the project owner or the owner's Contractor.

Prior to the start of shaft construction, the Contractor shall electronically submit a list identifying the on-site supervisors and drill rig operators potentially assigned to the project to the Resident for approval. The list shall contain a brief description of each individual's experience in shaft excavation operations and placement of assembled steel reinforcing bar cages and concrete in shafts. The individual experience lists shall be limited to a single page for each supervisor or operator.

a. On-site supervisors shall have a minimum two years experience in supervising construction of shaft foundations of similar size (diameter and depth) and scope to those shown in the Plans, and similar geotechnical conditions to those described in the boring logs and summary of geotechnical conditions. Work experience shall be direct supervisory responsibility for the on-site shaft construction operations. Project management personnel who are indirectly supervising on-site shaft construction operations are not acceptable for this experience requirement.

b. Drill rig operators shall have a minimum of one year experience in construction of shaft foundations.

The Resident will approve or reject the Contractor's qualifications and field personnel in accordance with Subsection 105.7 after receipt of the submission. Work shall not be started on any shaft until the Contractor's qualifications and field personnel are approved by the Resident. The Resident may suspend the shaft construction if the Contractor substitutes unapproved personnel. The Contractor shall be fully liable for the additional costs resulting from the suspension of work, and no adjustments in Contract time resulting from the suspension of work will be allowed.

2. <u>Shaft Installation Narrative Submittal</u>

The Contractor shall submit its installation procedure to the Resident no later than three weeks prior to the scheduled commencement of the work. The installation procedure shall outline the steps and equipment used to complete the work in accordance with these Specifications. The Contractor shall not commence foundation construction prior to receiving approval from the Authority's Resident or designated representative. The narrative shall provide at least the following information:

a. Proposed overall construction operation sequence.

b. Description, size, and capacities of proposed equipment, including but not limited to, cranes, drills, auger, bailing buckets, final cleaning equipment, and drilling unit. The narrative shall describe why the equipment was selected, and describe equipment suitability to the anticipated site conditions and work methods. The narrative shall include a project history of the drilling equipment demonstrating the successful use of the equipment on shafts of equal or greater size in similar soil conditions.

The narrative shall also include details of shaft excavation and cleanout methods.

c. Details of the method(s) to be used to ensure shaft stability (i.e., prevention of caving, bottom heave, using temporary casing, or other means) during excavation (including pauses and stoppages during excavation) and concrete placement. If permanent casings are required, casing dimensions and detailed procedures for installation shall be provided.

d. Description of the method used to fill or eliminate all voids below the top of shaft between the plan shaft diameter and excavated shaft diameter, when permanent casing is specified.

e. Details of concrete placement, including proposed operational procedures for pumping methods, and a sample uniform yield form to be used by the Contractor for plotting the approximate volume of concrete placed versus the depth of shaft for all shaft concrete placement (except concrete placement in the dry).

f. When shafts are constructed in water, the submittal shall include seal thickness calculations, seal placement procedure, and descriptions of provisions for casing shoring dewatering and flooding.

g. Description and details of the storage and disposal plan for excavated material.

h. Reinforcing shop drawings, details of reinforcement placement, including bracing, centering, and lifting methods, and the method to ensure the reinforcing cage position is maintained during construction, including use of bar boots and/or rebar cage base plates. The reinforcing assembly and installation plan shall include:

i. Procedure and sequence of reinforcing bar cage assembly.
ii. The tie pattern, tie types, and tie wire gages for all ties on permanent reinforcing and temporary bracing.
iii. Number and location of primary handling reinforcing bars used during lifting operations.
iv. Details and orientation of all internal cross-bracing, including a description of connections to the reinforcing bar cage.
v. Description of how temporary bracing is to be removed.
vi. Location of support points during transportation.
vii. Cage weight and location of the center of gravity.
viii. Number and location of pick points used for lifting for installation and for transport (if assembled off-site).

The Resident will evaluate the shaft installation narrative for conformance with the Plans, Specifications, and Special Provisions, within the review time specified in Subsection 105.7.

626.034 Concrete Foundations

This Subsection is replaced in its entirety with the following:

The Authority has completed a test boring program to evaluate subsurface conditions in the general vicinity of proposed foundations. The associated boring log(s), as well as foundation requirements and any foundation-specific information are provided on the Plans or in the geotechnical report for this Project. Foundations shall consist of cast-in-place reinforced concrete drilled shafts to the size and depths shown on the Plans. Alternative foundation designs including but not limited to steel piles, spread footings, and precast elements will not be considered.

Drilled shafts shall not be permanently cased so that the concrete may be cast directly against the surrounding soil. Temporary casings may be used prior to installation of the concrete in the presence of weak or collapsible soil conditions. If soil conditions or bedrock elevations differ materially from those described on the boring logs, the Contractor shall stop work on that foundation and contact the Resident. Drilled shafts shall be installed to the depths shown on the Plans.

18 Inch Diameter drilled shaft foundations shall be cast directly against the surrounding soil and shall bear directly on bedrock. In areas where rock or ledge is encountered above the proposed bottom of the foundation, the Contractor shall notify the Resident who will record the differential of the depth. Removal of the rock is not required. In areas where rock or ledge is deeper than the proposed bottom of the foundation, the Contractor shall notify the Resident who will record the differential of the depth. Concrete fill and reinforcement cages shall extend to the top of the bedrock regardless of the differential in elevations. Reinforcement for the 18 Inch Diameter Drilled Shafts shall be comprised solely of GFRP rebar elements. Ties, centralizers, boots, cross-bracing, etc. used as secondary material to create the reinforcement cage shall be non-metallic. Steel reinforcement and metallic elements are not permitted.

36 Inch Diameter drilled shaft foundations shall be cast directly against the surrounding soil and shall be rock-socketed into bedrock to the depth shown on the Plans. In areas where rock or ledge is encountered above the proposed bottom of the foundation, the Contractor shall notify the Resident who will record the differential of the depth and will forwarded this information to the Engineer of Record for determination whether adjustments are to be made to the proposed depth of the rock-socket. In areas where rock or ledge is deeper than the proposed bottom of the foundation, the Contractor shall notify the Resident who will record the differential of the depth. Concrete fill and reinforcement cages shall extend to the bottom of the rock socket regardless of the differential in elevations. Reinforcement for the 36-Inch Diameter Drilled Shafts shall be comprised of traditional steel rebar elements.

A. Shaft Construction Tolerances

Shafts shall be constructed so that the center at the top of the shaft is within a horizontal tolerance equal to one inch.
Shafts shall be within 1.5 percent of plumb. During drilling or excavation of the shaft, the Contractor shall make frequent checks on the plumbness, alignment, and dimensions of the shaft. Any deviation exceeding the allowable tolerances shall be corrected with a procedure approved by the Resident.

Shaft reinforcing bar placement tolerances shall conform to Section 503.

All foundations shall be warranted against leaning and corrosion for two years after the project is completed. If the lean is greater than two degrees from normal or the foundation is spalling within the first two years, the Contractor shall replace the foundation at no extra cost.

B. Shaft Excavation

Shafts shall be excavated to the required depth as shown in the Plans. Shaft excavation operations shall conform to this Section and the shaft installation narrative as approved by the Resident.

Shaft excavation shall not be started until the Contractor has received approval from the Resident for the reinforcing steel centralizers required when the casing is to be pulled during concrete placement.

1. Conduct of Shaft Excavation Operations

Once the excavation operation has been started, the excavation shall be conducted in a continuous operation until the excavation of the shaft is completed, except for pauses and stops as noted, using approved equipment capable of excavating through the type of material expected.

Pauses, defined as momentary interruptions of the excavation operation, will be allowed only for casing splicing, tooling changes, and removal of obstructions. Shaft excavation operation interruptions not conforming to this definition shall be considered stops. Stops for fully cased excavations shall not exceed 24 hours duration. For stops exceeding the time durations specified above, the Contractor shall stabilize the excavation using the following method:

a. For cased excavation, backfill the hole with flowable fill in accordance with Section 502. The Contractor shall backfill the hole to a minimum of five feet above the bottom of casing (temporary or permanent).

During stops, the Contractor shall stabilize the shaft excavation to prevent bottom heave, caving, head loss, and loss of ground. The Contractor bears full responsibility for selection and execution of the method(s) of stabilizing and

maintaining the shaft excavation. Shaft stabilization shall conform to the shaft installation narrative in accordance with these Specifications.

2. Temporary and Permanent Shaft Casing

The Contractor shall furnish and install required temporary and permanent shaft casings as shown in the Plans and as specified in the Special Provisions.

3. General Shaft Casing Requirements

Shaft casing shall be watertight and clean prior to placement in the excavation. The inside diameter of the casing shall not be less than the specified diameter of the shaft. The outside diameter of the casing shall not be greater than the specified diameter of the shaft plus six inches, except as otherwise noted for shafts five feet or less in diameter.

4. Permanent Shaft Casing (when applicable)

Permanent casing is defined as casing designed as part of the shaft structure and installed to remain in place after construction is complete. All permanent casing shall be of ample strength to resist damage and deformation from transportation and handling, installation stresses, and all pressures and forces acting on the casing. Where the minimum thickness of permanent casing is specified in the Plans, it is specified to satisfy structural design requirements only. The Contractor shall increase the casing thickness as necessary to satisfy the requirements of this Section.

5. Temporary Casing

Temporary casing is defined as casing installed to facilitate shaft construction only, which is not designed as part of the shaft structure, and which shall be completely removed after shaft construction is complete unless otherwise shown in the Plans. All temporary casing shall be of ample strength to resist damage and deformation from transportation and handling, installation and extraction stresses, and all pressures and forces acting on the casing. The casing shall be capable of being removed without deforming and causing damage to the completed shaft and without disturbing the surrounding soil.

To maintain stable excavations and to facilitate construction, the Contractor shall furnish and install temporary casing in addition to the required casing specified in the Special Provisions. The Contractor shall provide temporary casing at the site in sufficient quantities to meet the needs of the anticipated construction method.

6. Permanent Slip Casing (when applicable)

Permanent slip casing is defined as casing installed vertically inside the drilled hole, after removal of the temporary casing and prior to pouring the exposed length of shaft, and wet-set into the shaft concrete a minimum of two feet below grade or to greater depth as needed to enhance stability. The casing diameter requirements of Section 626.034.B.3 do not apply to permanent slip casing, but the inside diameter of the permanent slip casing shall provide the reinforcing bar clearance specified in Section 626.034.D.1.

7. Conduct of Shaft Casing Installation and Removal and Shaft Excavation Operations

The Contractor shall conduct casing installation and removal operations and shaft excavation operations such that the adjacent soil outside the casing and shaft excavation for the full height of the shaft is not disturbed. Disturbed soil is defined as soil whose geotechnical properties have been changed from those of the original in situ soil, and whose altered condition adversely affects the structural integrity of the shaft foundation.

8. Bottom of Shaft Excavation

The Contractor shall use appropriate means such as a cleanout bucket or air lift to clean the bottom of the excavation of all shafts. No more than two inches of loose or disturbed material shall be present at the bottom of the shaft just prior to placing concrete. The excavated shaft shall be inspected and approved by the Resident with consultation with the Geotechnical Engineer prior to proceeding with construction. The bottom of the excavated shaft shall be sounded with a tape with a heavy weight attached to the end of the tape, or other means acceptable to the Resident to determine that the shaft bottom meets the requirements in the Contract.

9. Shaft Obstructions

When obstructions are encountered, the Contractor shall notify the Resident promptly. An obstruction is defined as a specific object (including, but not limited to, boulders, logs, and manmade objects) encountered during the shaft excavation operation which prevents or hinders the advance of the shaft excavation. When efforts to advance past the obstruction to the design shaft tip elevation result in the rate of advance of the shaft drilling equipment being significantly reduced relative to the rate of advance for the portion of the shaft excavation in the geological unit that contains the obstruction, then the Contractor shall remove, break up, or push aside the obstruction. The method of dealing with such obstructions, and the continuation of excavation shall be as proposed by the Contractor and approved by the Resident.

10. Voids Between Permanent Casing and Shaft Excavation

When permanent casing is specified, excavation shall allow its installation within the specified outside diameter of the shaft. All void space occurring between the casing and shaft excavation shall be filled with concrete or excavatable flowable fill, in accordance with the shaft installation narrative specified in Subsection 626.022.A.2 and as approved by the Resident.

11. Maintenance of a Stable Shaft Excavation

The Contractor shall demonstrate to the satisfaction of the Resident that stable conditions are being maintained. If the Resident determines that stable conditions are not being maintained, the Contractor shall immediately take action to stabilize the shaft. The Contractor shall submit a revised shaft installation narrative that addresses the problem and prevents future instability. The Contractor shall not continue with shaft construction until the damage that has already occurred is repaired in accordance with the Specifications, and until receiving the Resident's approval of the revised shaft installation narrative.

The use of slurry is not allowed.

C. Assembly and Placement of Reinforcing

1. Reinforcing Bar Cage Assembly

The reinforcing cage shall be rigidly braced to retain its configuration during handling and construction. Individual or loose bars will not be permitted. The Contractor shall show bracing and any extra reinforcing steel required for fabrication of the cage on the shop drawings. Shaft reinforcing bar cages shall be supported on a continuous surface to the extent possible. All rigging connections shall be located at primary handling bars, as identified in the reinforcing assembly and installation plan as approved by the Resident. Internal bracing is required at each support and lift point. The reinforcement shall be carefully positioned and securely fastened to provide the minimum clearances listed below, and to ensure no displacement of the reinforcing bars occurs during placement of the concrete. The reinforcing bars shall be securely held in position throughout the concrete placement operation.

2. Reinforcing Bar Cage Centralizers

The Contractor shall submit details of the proposed reinforcing cage centralizers along with the shop drawings. The reinforcing centralizers at each longitudinal space plane shall be placed at least at the quarter points around the circumference of the reinforcing bar cage, and at a maximum longitudinal spacing of either 2.5 times the shaft diameter or 20 feet, whichever is less.

D. Placing Concrete

1. Concrete Cover Over Reinforcing Bars

Reinforcing bars shall be placed as shown in the Plans with concrete cover as noted in the Plans.

2. Concrete Class for Shaft Concrete

Concrete for drilled shafts and spread footings shall be Class A in accordance with Section 502, Structural Concrete. Precast foundations will not be permitted.

3. Concrete Placement Requirements

Concrete for drilled shafts shall be placed as soon after excavation as practicable to prevent debris from collecting in the excavated area. The Contractor shall provide temporary dewatering of excavations for foundations as needed, such that concrete is placed in the dry. Concrete for drilled shafts shall be placed by tremie methods as temporary casing is withdrawn to prevent debris from contaminating the foundation and to ensure concrete is cast against the surrounding soil.

Before placing concrete, the required elbows of entrance conduits, reinforcing bars and anchor bolts shall be carefully positioned.

Conduit placement penetrating the side of the foundation concrete below grade shall be by one of the following methods:

a. Contractor shall install the vertical conduit and elbow with a block out along the edge of the rebar cage, excavate to the block out below grade as required after concrete has cured, cut a hole in the permanent slip casing to remove the block out, and splice the conduit and grout the void as required.
b. Contractor shall provide compacted fill as required to raise grade at the foundation location to form the exposed length of concrete foundation in lieu of providing a permanent slip casing above grade. The conduit including the elbow and side penetration below grade shall be placed during the placement of the concrete in the top portion of the drilled shaft.
c. Contractor shall submit alternative conduit placement methods to the Resident for review and approval.

Concrete placement shall commence immediately after completion of excavation by the Contractor and inspection by the Resident. Immediately prior to commencing concrete placement, the shaft excavation shall conform to Subsection 626.034.B. Concrete placement shall continue in one operation to the top of the shaft, or as shown in the Plans. The Contractor shall place concrete in the dry.

During concrete placement, the Contractor shall monitor, and minimize, the difference in the level of concrete inside and outside of the reinforcing bar cage. The Contractor shall conduct concrete placement operations to maintain the differential concrete head as one foot maximum.

If water is not present, the concrete shall be deposited through the center of the reinforcement cage by a method that prevents segregation of aggregates and splashing of concrete on the reinforcement cage. The concrete shall be placed such that the free-fall is vertical down the center of the shaft without hitting the sides, the reinforcing bars, or the reinforcing bar cage bracing.

4. Concrete Vibration Requirements

When placing concrete in the dry, only the top five feet of concrete shall be vibrated, in accordance with Section 502. If a temporary casing is used, it shall be removed before vibration. This requirement may be waived if a temporary casing is used and removed with a vibratory hammer during the concrete placement operation. Vibration of concrete does not affect the maximum slump allowed for the concrete class specified.

5. Protection of Fresh and Curing Concrete From Vibration

The Contractor's construction operation in the vicinity of a shaft excavation with freshly placed concrete and curing concrete shall avoid operations that generate potentially damaging vibration of the freshly placed concrete.

E. Casing Removal

1. Concrete Head Requirements During Temporary Casing Removal

As the temporary casing is withdrawn, the Contractor shall maintain the concrete inside the casing at a level sufficient to balance the hydrostatic pressure outside the casing and at least two feet above the bottom of the casing.

2. Removing Portions of Permanent Casing Above the Top of Shaft

Tops of permanent casings for the shafts shall be removed to the top of the shaft.

3. Requirements for Leaving Temporary Casing in Place

The Contractor shall completely remove all temporary casings, except as noted. The Contractor may leave some or all of the temporary casing in place provided all the following conditions are satisfied:

a. The Contractor shall submit the following information in writing to the Resident:

1. The Contractor shall completely describe the portion of the temporary casing to remain.
2. The Contractor shall specify the reason(s) for leaving the portion of the temporary casing in place.
3. The Contractor shall submit structural calculations, using the design Specifications and design criteria specified in the Plans, indicating that leaving the temporary casing in place is compatible with the structure as designed in the Plans.

b. The Contractor shall have received the Resident's written approval of the submitted request to leave the temporary casing in place.

F. Contractor's Investigation and Remedial Action Plan

For all shafts determined to be unacceptable, the Contractor shall submit a plan for further investigation or remedial action to the Resident for approval. All modifications to the dimensions of the shafts, as shown in the Plans, required by the investigation and remedial action plan shall be supported by calculations and working drawings as specified in Section 626. All investigation and remedial correction procedures and designs shall be submitted to the Resident for approval. The Contractor shall not begin repair operations until receiving the Resident's approval of the investigation and remedial action plan.

G. Cored Holes

At the Resident's request, the Contractor shall drill a corehole in any questionable quality shaft (as determined by observation of the Resident) to explore the shaft condition.

Prior to beginning coring, the Contractor shall submit the method and equipment used to drill and remove cores from shaft concrete to the Resident and receive the Resident's written approval. The coring method and equipment shall provide for complete core recovery and shall minimize abrasion and erosion of the core.

If a defect is confirmed, the Contractor shall pay for all coring costs. If no defect is encountered, the Maine Turnpike Authority will pay for all coring and grouting of the core hole. Materials and Work necessary, including Engineering analysis and redesign, to effect corrections for shaft defects shall be furnished to the Resident's satisfaction at no additional cost to the Maine Turnpike Authority.

If soil conditions differ materially from those described on the boring logs, the Contractor shall stop work on that foundation and contact the Resident. All unsuitable material (including but not limited to peat, organic material, and material that has been disturbed and/or dumped) within the limits of a foundation shall be removed to the limits directed by the Resident. Drilled shaft depths shall be increased as directed by the Geotechnical Engineer to account for the unsuitable material.

H. Shaft Completion

All foundations shall be warranted against leaning and corrosion for two years after the project is completed. If the lean is greater than two degrees from normal or the foundation is spalling within the first two years, the Contractor shall replace the foundation at no extra cost.

The finished ground at each foundation shall be graded as shown on the Plans. If required, approved backfill material shall be added to grade the slopes as specified. There will be no additional compensation for furnishing, placing and compacting material flush around the foundation.

626.04 Method of Measurement

This Section is replaced in its entirety with the following:

Foundation Pay Items 626.311, 626.3321, and 626.3322 will be measured by the linear foot based on the proposed elevations for each element as shown on the Plans.

For Pay Item 626.311, 18-Inch Diameter Drilled Shaft, the limits of measurement shall be from the top of bedrock to the top elevation of the drilled shaft as shown on the Plans.

For Pay Item 626.3321, 36-Inch Diameter Drilled Shaft, the limits of measurement shall be from the top of bedrock to the top elevation of the drilled shaft as shown on the Plans.

For Pay Item 626.3322, 36-Inch Diameter Drilled Shaft –Rock Socket, the limits of measurement shall be from the bottom of the rock socket to the top of bedrock. The theoretical length per rock socket is shown on the Plans. In the event that a deeper rock socket is required as determined by the Engineer of Record, the limit of measurement shall include the full constructed length of the rock socket.

626.05 Basis of Payment

This Section is replaced in its entirety with the following:

The accepted quantity of 18-Inch Diameter Drilled Shaft will be paid for at the Contract unit price per linear foot of shaft drilled and installed. This payment shall include: drilling/excavation of the soil, dewatering, installation and removal of temporary casings (if necessary), concrete, GFRP reinforcing, and all incidentals necessary to complete the work.

The accepted quantity of 36-Inch Diameter Drilled Shaft will be paid for at the Contract unit price per linear foot of shaft drilled and installed. This payment shall include: drilling/excavation of the soil, dewatering, installation and removal of temporary casings (if necessary), concrete, steel reinforcing, and all incidentals necessary to complete the work.

The accepted quantity of 36-Inch Diameter Drilled Shaft – Rock Socket will be paid for at the Contract unit price per linear foot of shaft rock socketed. This payment shall include: drilling/excavation of the rock, dewatering, concrete, steel reinforcing, and all incidentals necessary to complete the work.

Drilled shaft reinforcement which extends above the top of the drilled shaft shall be incidental to the drilled shaft pay item.

Dewatering shall be incidental to the respective drilled shaft pay items.

Conduit which extends through the drilled shaft and the 12 inch section leading into and out of the shaft shall be considered incidental to the respective drilled shaft pay item.

Payment will be made under:

Pay Item		Pay Unit
626.311	18-Inch Diameter Drilled Shaft	Linear Foot
626.3321	36-Inch Diameter Drilled Shaft	Linear Foot
626.3322	36-Inch Diameter Drilled Shaft – Rock Socket	Linear Foot

SPECIAL PROVISION

SECTION 627

PAVEMENT MARKINGS

(Painted Pavement Markings)

627.01 Description

The following paragraphs are added:

This work shall consist of furnishing and placing permanent pavement marking paint and temporary painted pavement markings at locations shown on the Plans or as approved by the Resident.

Lines on the turnpike shall be six inches wide. Lines on local roads shall be four inches wide.

Temporary raised pavement markers will not be allowed as a substitute for temporary painted pavement marking lines unless approved by the Resident for use as a transition between the existing pavement markings and the temporary painted pavement marking lines. Temporary raised pavement markings may be used as a substitute for temporary painted pavement markings when the markings are immediately adjacent to a concrete barrier or guardrail such that the markings will not be subject to traffic. The temporary raised pavement markers will be measured for payment as temporary painted pavement markings when their use has been approved by the Resident.

627.02 Materials

This Subsection is deleted in its entirety and replaced with the following:

Pavement marking paint shall be 100 percent acrylic, low VOC, fast trying, white and yellow waterborne traffic paint.

The paint shall be formulated and processed specifically for service as a binder for beads, in such a manner as to produce maximum adhesion, refraction, and reflection. Any capillary action of the paint shall not be such as to cause complete coverage of the beads. The binder shall be 100 percent acrylic, as determined by infrared analysis according to ASTM D2621. VOC levels shall comply with ASTM D3960. Lead percentage shall comply with ASTM D3335. The paint shall be rated as non-combustible.

627.04 General

The third paragraph is deleted and replaced with the following:

Broken lines shall consist of alternate 10 foot painted line segments and 30 foot gaps.

Dotted white lines (DWL) shall consist of alternate three foot painted line segments and nine foot gaps.

627.09 Method of Measurement

Painted pavement marking lines will be measured by the linear foot.

The second and third sentences in the second paragraph are deleted and replaced with the following:

The measurement of broken white lines, both permanent and temporary, will include the gaps when painted. Temporary Painted Pavement Marking lines will be measured for payment by the linear foot.

Removal of the Temporary Painted Pavement Marking lines will be measured for payment as Removing Existing Pavement Markings.

627.10 Basis of Payment

The following paragraphs are added:

The accepted quantity of Painted Pavement Marking lines will be paid at the Contract price per linear foot. This price shall include all labor and materials to furnish, install and maintain the paint markings.

Payment will be made under:

Pay Item		Pay Unit
627.681	Temporary 6 Inch Painted Pavement Marking Line – Yellow or White	Linear Foot

SPECIAL PROVISION

SECTION 627

PAVEMENT MARKINGS

(Temporary Raised Pavement Markers)

627.01 Description

The following sentences are added:

This work shall consist of furnishing, placing and removing temporary raised pavement marking at locations as shown on the Plans or as approved by the Resident.

Temporary raised pavement markings may be used to delineate travel lanes after placement of pavement.

627.02 Materials

The second paragraph is deleted and replaced with the following:

The temporary raised pavement markers shall be white or yellow one way, or two way, markers (Type Tom W-1, Y-1, Y-2, Grade WZ) as distributed by Davidson Plastics Co. (DAPCO), Kent, WA, or an approved equal. Colors shall conform to MUTCD requirements.

627.04 General

The following sentence is added:

Temporary raised pavement marker that lose reflectivity, becomes broken, dislodged or missing during the life of the Contract shall be replaced by the Contractor at no additional cost to the Authority.

627.09 Method of Measurement

The following sentence is added:

Temporary Raised Pavement Markers will be measured by each unit, complete in place, maintained and accepted.

627.10 Basis of Payment

The following paragraphs are added:

The accepted quantity of Temporary Raised Pavement Markers will be paid for at the Contract price each. This price shall include all labor and materials to furnish, install, maintain, and remove the markers.

Payment will be made under:

Pay Item		Pay Unit
627.812	Temporary Raised Pavement Markers	Each

SPECIAL PROVISION

SECTION 631

EQUIPMENT RENTAL

631.02 General

The following sentences are added:

Jackhammer - To be included under category of air tool.

Bucket truck - Approved one man, able to reach 30 feet high bucket truck with 10 feet lateral extension.

Scissor Lift - Hydraulic scissors lift with a minimum capacity of three workers.

Electrician - Licensed by State of Maine.

Electrician's Apprentice - Enrolled in an accredited program.

631.08 Basis of Payment

The following paragraphs are added:

Such related costs such as use of hand tools, meal and room expenses, benefits, insurance, retirement, travel time, overtime, overhead and profit will not be measured separately for payment, but shall be incidental to the unit price for the bid item.

Note: For extra materials required for miscellaneous work the General Contractor shall be allowed 15 percent overhead and profit on the cost of materials and rental equipment (not covered by miscellaneous unit items). Rates for Subcontractor owned equipment required to perform miscellaneous work, not otherwise provided for in the Contract, shall be negotiated.

The General Contractor will be allowed 10 percent overhead and profit on the subcontractor's cost of materials, and subcontractors rented equipment (not covered by miscellaneous unit items). The General Contractor shall include his markup on the Subcontractor's labor in the pay items.

The labor hour bid items shall include labor and labor burdens, benefits, supervision, transportation, travel time and allowances, overnights, small tools and equipment, subcontractor overhead and profit, and General Contractor overhead and profit. Time will be measured from the start of work to the stoppage of work at the project site; less the time taken for lunch. No deduction of time will be taken for the standard morning "coffee break".

Payment will be made under:

Pay Item		Pay Unit
631.50	Jackhammer (air tool including operator)	Hour
631.51	Bucket truck	Hour
631.52	Scissor Lift	Hour
631.53	Electrician	Hour
631.54	Electrician's Apprentice	Hour

SPECIAL PROVISION

SECTION 634

HIGHWAY LIGHTING

(Replacement LED Fixture)
(Remove and Reset Light Standard)

634.01 Description

The following paragraph is added:

This work shall consist of removing existing light standards, luminaires, and any breakaway devices and resetting with all associated appurtenances and wiring system on to new concrete foundations with new luminaires at locations as shown on the Plans. This work shall also include removing existing luminaires from light standards remaining in place and installing a new LED luminaire with all associated appurtenances and wiring system at locations as shown on the Plans. All removed existing luminaires shall be carefully transported and stacked at the MTA's Sign Shop at Mile 58 NB.

634.021 Materials

The following paragraphs are added:

Underground junction boxes shall be precast concrete (Item 626.11). Provide manufacturer's listed cover for each junction box with logo stating "LIGHTING". All pull boxes are to be furnished as detailed on the Drawings.

Splices in junction boxes shall be made with ILSCO USPA-350-SS-DB Safetysub Watertight Direct Bury Splice Wire Range 350MCM-10-STR connectors for the appropriate wire count only. Splices in hand holes shall be Ideal SLK Disconnect Fuse Kit 30-S2212.

LED fixtures shall be one of the following:

- Satellite series Model #'s SAT-96M-7-O-R-T3-525-GY, as manufactured by LED Roadway Lighting of Halifax, Nova Scotia; (877) 533-5755

- LEDway Streetlight #STR LWY-3M-HT-08-E-UL-SV-525-R, as manufactured by CREE, Inc., 4600 Silicon Drive, Durham, NC 27703.

634.04 Cable Installation

The reset light standards shall be wired with new wiring.

634.051 Removing Light Standards

The first paragraph is deleted and replaced with the following:

Before removing light standards, the luminaires shall be removed from the light standard and stacked.

The second paragraph is deleted and replaced with the following:

Care shall be exercised in removing, transporting and stacking the light standards and luminaires. The Contractor will be required to replace, at his own expense, all equipment damaged or destroyed by his operation.

The Contractor will not be allowed to remove the existing light standards until all new foundations, wiring, conduits and junction boxes have been installed. Breakaway devices shall be required on all light standards. If breakaway devices do not exist on the existing light standard, new breakaway devices shall be supplied and installed. The Contractor will be allowed one (1) working day to remove and reset the light standards, including replacing luminaires and testing. At a minimum, existing light levels at the plaza shall be maintained while relocated light standards are being installed and made fully operational.

634.06 Luminaires

In the second paragraph "12" is replaced with "10" and "THHN" replaced with "XHHW" to read:

"Number 10 wires AWG copper stranded XHHW...".

634.092 Method of Measurement

The following sentence is added:

Replacement LED Fixture and Remove and Reset Light Standard will be measured by the single unit each, complete in place and accepted.

634.093 Basis of Payment

In the second sentence of the first paragraph, the words, "LED fixture, pole wiring" shall be added after the words, "bracket arm".

The following paragraphs are added:

Payment for furnishing and installing Replacement LED Fixtures will be made for the accepted quantity at the Contract unit price each, which shall include removing the existing luminaire and delivering to the MTA, luminaire, ballast, lamp and incidentals necessary to complete the work.

The accepted quantity of Remove and Reset Light Standard will be paid at the Contract unit price each for the number of units that are removed and reset. Payment shall be full compensation for the removal and resetting of the light standard, removing and delivering to the MTA, resetting the breakaway device or installing a new breakaway device, new pole wiring to the new LED fixture and all incidentals necessary to complete the work.

Payment will be made under:

Pay Item		Pay Unit
634.175	Replacement LED Fixture	Each
634.208	Remove and Reset Light Standard	Each

SPECIAL PROVISION

SECTION 639

ENGINEERING FACILITIES

(Field Office, Type B)

639.04 Field Offices

This Subsection is amended by the addition of the following:

The Resident's Field Office shall be furnished and installed by the Contractor. The Contractor shall be responsible for furnishing and maintaining electricity, propane heat, and wireless internet service for the entire duration of the Contract, which includes periods of time which Work has been suspended. All of the costs associated with the above shall be the responsibility of the Contractor.

639.10 Method of Measurement

The following sentence is added:

Field office will be measured by the each.

639.11 Basis of Payment

The accepted quantity of field office will be paid at the Contract unit price each which will be full payment for providing electricity, propane heat, and wireless internet service. No additional markup will be allowed.

Payment will be made under:

Pay Item		Pay Unit
639.191	Field Office, Type B	Each

SPECIAL PROVISION

SECTION 643

TRAFFIC SIGNALS

(Lane Use Signal Modification)

643.01 Description

This work shall consist of supply and installation of replacement lane use signals (Non-Flashing). All equipment, installation of equipment and other incidental work shall conform to the latest applicable provisions of: NEC, MUTCD, NESC, NEMA, and the ITE Standards for traffic control equipment. All work shall be done to the satisfaction of the Resident. The meaning of specific terms shall be as defined in MUTCD, NESC, and the ITE Standards for traffic control equipment.

643.02 Materials

The replacement lane use signal heads shall be Trans-Tech DOT2424RG-175 or approved equal. See Appendix F for technical product details.

643.03 Installation

The replacement lane use signal housing and LED signal shall be installed in the same location as the existing lane use signal and the existing wiring shall be used. New Pelco (or equal) mounting brackets may be needed and will be incidental to the installation of the new lane use signal. The bottom of the new lane use signal shall be above the bottom of the suspended ceiling, any relocation of the mounting hardware needed shall be considered incidental to the installation of the new lane use signal.

643.04 Method of Measurement

Replacement lane use signals will be measured by each unit, installed and accepted.

643.05 Basis of Payment

Replacement Lane Use Signals will be paid for at the Contract unit price each which payment shall be full compensation for the furnishing and installation of new lane use signals, and all other materials, labor, tools, equipment and incidentals necessary to complete the work.

Payment will be made under:

Pay Item		Pay Unit
643.711	Lane Use Signal Modification	Each

SPECIAL PROVISION

SECTION 645

HIGHWAY SIGNING

(Remove and Stack Sign)

645.07 Demounting and Reinstalling Existing Signs and Poles

The following paragraphs are added:

At locations as shown on the Plans, existing ground-mounted signs are designated to be removed and stacked. This work shall consist of removing and delivering existing sign panels, posts, concrete foundations and breakaway devices to the MTA Sign Shop at Mile 58 NB. Excavations shall be backfilled and ground restored to the satisfaction of the Resident.

Any existing signs not shown on the Plans are to remain in their existing condition unless directed otherwise by the Resident.

645.08 Method of Measurement

The following sentence is added:

Removing and stacking existing signs shall be measured as complete units each removed, delivered, and stacked.

645.09 Basis of Payment

The following paragraphs are added:

The accepted signs removed and stacked shall be paid for at the Contract unit price each as specified. Such price shall include removing, delivering, and stacking sign panels and supports at the location specified.

Payment will be made under:

Pay Item		Pay Unit
645.105	Remove and Stack Sign	Each

SPECIAL PROVISION

SECTION 645

HIGHWAY SIGNING

(Remove and Stack Canopy Mounted Sign)

645.01 Description

The following paragraph is added:

Existing canopy mounted signs are defined as signs fabricated from sheet aluminum as identified in the Plans. Each sign is mounted on framing supports on top of the toll plaza canopy with an attached luminaire. There are two static signs and two rotating signs to be stacked at the MTA's Sign Shop at Mile 58 NB.

The following Subsection is added:

645.08 Method of Measurement

The following sentence is added:

Remove and Stack Canopy Mounted Signs shall be measured as complete units each removed and stacked.

645.09 Basis of Payment

The following paragraphs are added:

The accepted Remove and Stack Canopy Mounted Signs shall be paid for at the Contract unit price each as specified. Such price shall include removing sign panels, luminaires, and hardware framing supports, gears, sign controllers and all electrical components associated with the rotating signs and delivering to the MTA's Sign Shop at Mile 58 NB. This includes all hardware, labor and equipment necessary to complete this task.

Any signs, luminaires, or supports damaged by the Contractor shall be replaced with new signs, luminaires, or supports conforming to the applicable Specifications at no additional cost to the Authority.

Payment will be made under:

Pay Item		Pay Unit
645.107	Remove and Stack Canopy Mounted Sign	Each

SPECIAL PROVISION

SECTION 645

HIGHWAY SIGNING

(Overhead Guide Sign)
(Cantilever Guide Sign)
(Bridge Overpass-Mounted Mainline Sign)

645.01 Description

The following sentences are added:

This work shall include the fabrication and installation of new overhead mainline signs on proposed Lunts Hill Road Bridge. The sign supports on Lunts Hill Road will be installed by others.

This work shall also include removing, stacking and reinstalling existing parapet-mounted aluminum bridge rail at the Route 126 Underpass as required to facilitate installation of the Bridge Overpass-Mounted Signs and Sign Supports.

645.02 General

The following sentence is added:

A copy of the sign support details that will be installed by other on Lunts Hill Road Bridge is included in Appendix G.

645.021 Materials

The following sentence is added at the end of this Subsection:

Anchor bolts shall be anchored in place using an approved chemical anchoring system selected from MaineDOT's list of approved anchoring materials.

645.024 Bridge, Cantilever and Butterfly Support Structure Foundations

The second paragraph of this Subsection is deleted and replaced with the following:

Soil borings will be provided to the Contractor for consideration during foundation design. All costs associated with the work required to design the footing and prepare submittals shall be incidental to related Contract items. All unsuitable material (peat, organic material, material that has been dumped, etc.) within the limits of a footing or drilled shaft must be removed at the direction of the Resident. Concrete for the footing shall be placed immediately after excavation to prevent water from collecting in the excavated area. The structural design of

foundations shall meet the requirements of the current edition of AASHTO "Standard Specifications for Highway Bridges". Concrete shall be Class AAA in accordance with Section 502, Structural Concrete. Drilled shaft foundation holes, except in ledge, shall be excavated by auger method to the neat line of the outside dimensions of the footing without disturbing the soil around or below the proposed footing. Precast foundations shall not be permitted. In areas where rock or ledge is encountered above the proposed bottom of footing, the Contractor will have the option of removing rock and placing the footing at the design depth shown on the Contractor's Working Drawings, or constructing a grouted rock-anchored 6-136 foundation system. This rock-anchored system shall be designed by the Contractor and approved by the Authority Back fill for pedestal foundations shall be granular borrow for underwater back fill meeting the requirements of Section 703.20 - Gravel Borrow, of the Standard Specification. The granular borrow shall be placed in layers not exceeding 150 mm [6 in] in depth before compaction. Each layer of back fill shall be thoroughly compacted by use of power tampers to at least 95 percent of the maximum density as measured in the field per AASHTO T191 or by an approved method using calibrated nuclear device. All back filling and compacting shall be in accordance with the applicable provisions of Section 206 of the Standard Specifications.

The Contractor shall submit three copies of all foundation design work, structural and geotechnical, together with computations and plans used for design purposes, as specified in Subsection 645.023. The plans shall be stamped by a Maine Professional Engineer.

645.08 Method of Measurement

The following sentence is added:

Measurement of Bridge Overpass-Mounted Mainline Signs will not include the sign supports fabricated and installed by others.

645.09 Basis of Payment

Payment will be made under:

Pay Item		Pay Unit
645.121	Overhead Guide Sign: (Sta. 5107+00)	Lump Sum
645.122	Overhead Guide Sign: (Sta. 5125+00)	Lump Sum
645.131	Bridge Overpass-Mounted Guide Sign: (Sta. 5057+18)	Lump Sum
645.1311	Bridge Overpass-Mounted Guide Sign: (Sta. 5057+18)	Lump Sum
645.132	Bridge Overpass-Mounted Guide Sign: (Sta. 5195+84)	Lump Sum
645.1321	Bridge Overpass-Mounted Guide Sign: (Sta. 5195+84)	Lump Sum
645.151	Cantilever Guide Sign: (Sta. 5080+50)	Lump Sum
645.152	Cantilever Guide Sign: (Sta. 5097+75)	Lump Sum
645.153	Cantilever Guide Sign: (Sta. 5134+00)	Lump Sum
645.154	Cantilever Guide Sign: (Sta. 5152+00)	Lump Sum

SPECIAL PROVISION

SECTION 645

HIGHWAY SIGNING

(Variable Speed Limit Sign)

645.01 Description

The following sentence is added:

This work shall also include the fabrication and installation of new Variable Speed Limit Signs on the NB and SB Space Frame.

645.021 Materials

The following paragraph is added at the end of this Subsection:

The Variable Speed Limit Sign shall be manufactured by Daktronics, Vanguard model VS-5220 VSLS. A detail will be provided in Appendix F.

645.08 Method of Measurement

The following sentence is added:

Variable Speed Limit Signs will be measured by each unit in place.

645.09 Basis of Payment

Payment will be made under:

Pay Item		Pay Unit
645.155	Variable Speed Limit Sign	Each

SPECIAL PROVISION

SECTION 645

HIGHWAY SIGNING

(Remove and Reset Mainline Sign)

645.01 Description

The following paragraphs are added:

This work shall consist of removing and resetting the existing highway guide signs as shown on the Plans. The work includes a combination of the following: removal, resetting, modifying, furnishing, and disposal of concrete foundations, steel posts, wood posts, and breakaway foundations. Existing materials from the existing sign installation may be reused to reset the existing sign or another sign.

The signs shall remain visible to turnpike drivers at all times unless other provisions have been approved.

645.02 General

The following sentences are added:

New concrete foundations shall conform to the requirements of Section 626 and shall be in conformance with the Maine Department of Transportation Standard Details.

Breakaway devices shall be B525 or B650 as manufactured by Transpo Industries, Inc. (www.transpo.com).

645.05 Signs

The following paragraphs are added:

The removal and resetting of the mainline signs shall be completed in accordance with the details as shown on the Plans. The Contractor shall keep all signs visible to turnpike drivers except for the period of time necessary to actually complete the relocation. The sign panel shall not be removed and relocated until after the proposed sign support system (foundation and posts) have been installed in the final location. One working day is allowed for the sign relocation.

The Contractor may elect to utilize all new materials or reuse materials from other sign locations that have previously been reset. The cutting of structural steel post shall be accomplished by mechanical means. The use of burning to cut shall not be allowed. One single connection will be allowed to extend a post to the required length. A full penetration weld or a bolted splice shall be required for the connection. The Contractor shall submit his proposed connection method to the

Resident for approval. Any damaged area shall be repaired with two coats of zinc-rich chromium paint. Material removed from an existing sign location and not reused at a proposed sign location shall become the property of the Contractor.

All signs posts on breakaway foundations shall be installed in accordance with the Specifications for breakaway devices. Multipost signs shall be constructed with the required splice as in accordance with the Plans.

645.08 Method of Measurement

The following sentence is added:

Remove and Reset Mainline Sign shall be measured for payment as one lump sum for each sign number as shown on the Plans.

645.09 Basis of Payment

The payment for Remove and Reset Mainline Sign shall be at the Contract lump sum price for each sign number. This payment shall be full compensation for furnishing all new materials, removing, modifying resetting existing material and signs, and all labor and equipment necessary to complete the installation in accordance with the details as shown on the Plans. This may include furnishing and installing new materials such as structural steel, concrete foundations, and single and multipole breakaway devices. Compensation for the excavation and backfill for the concrete foundation, as well as removal of the concrete foundation, shall be included in this item.

Payment will be made under:

Pay Item		Pay Unit
645.501	Remove and Reset Mainline Sign No. 1	Lump Sum
645.502	Remove and Reset Mainline Sign No. 2	Lump Sum
645.503	Remove and Reset Mainline Sign No. 3	Lump Sum
645.504	Remove and Reset Mainline Sign No. 4	Lump Sum
645.505	Remove and Reset Mainline Sign No. 5	Lump Sum
645.506	Remove and Reset Mainline Sign No. 6	Lump Sum
645.507	Remove and Reset Mainline Sign No. 7	Lump Sum

SPECIAL PROVISION

SECTION 652

MAINTENANCE OF TRAFFIC

(General)

652.2 Materials

The first sentence in the second paragraph is replaced with the following:

Super high intensity fluorescent retroreflective sheeting, ASTM 4956 – Type VII, Type VIII or Type IX (Prismatic), is required for all construction signs.

652.2.3 Flashing Arrow Board

Delete the existing 5 paragraphs and replace with the following: Flashing Arrow Panels (FAP) must be of a type that has been submitted to AASHTO's National Transportation Product Evaluation Program (NTPEP) for evaluation and placed on the Maine Department of Transportations' Approved Products List of Portable Changeable Message Signs & Flashing Arrow Panels.

FAP units shall meet requirements of the current Manual on Uniform Traffic Control Devices (MUTCD) for Type "C" panels as described in Section 6F.56 - Temporary Traffic Control Devices. An FAP shall have matrix of a minimum of 15 low-glare, sealed beam, Par 46 elements capable of either flashing or sequential displays as well as the various operating modes as described in the MUTCD, Chapter 6-F. If an FAP consisting of a bulb matrix is used, each element should be recess-mounted or equipped with an upper hood of not less than 180 degrees. The color presented by the elements shall be yellow.

FAP elements shall be capable of at least a 50 percent dimming from full brilliance. Full brilliance should be used for daytime operation and the dimmed mode shall be used for nighttime operation. FAP shall be at least 2.4 M x 1.2 M [96 inch x 48 inch] and finished in non-reflective black. The FAP shall be interpretable for a distance not less than 1.6 km [1 mile].

Operating modes shall include, flashing arrow, sequential arrow, sequential chevron, flashing double arrow, and flashing caution. In the three arrow signals, the second light from the arrow point shall not operate.

The minimum element on-time shall be 50 percent for the flashing mode, with equal intervals of 25 percent for each sequential phase. The flashing rate shall be not less than 25 or more than 40 flashes per minute. All on-board circuitry shall be solid state.

Primary power source shall be 12 volt solar with a battery back-up to provide continuous operation when failure of the primary power source occurs, up to 30 days with fully charged

batteries. Batteries must be capable of being charged from an onboard 110 volt AC power source and the unit shall be equipped with a cable for this purpose.

Controller and battery compartments shall be enclosed in lockable, weather-tight boxes. The FAP shall be mounted on a pneumatic-tired trailer or other suitable support for hauling to various locations, as directed. The minimum mounting height of an arrow panel should be 2.1 M [7 feet] from the roadway to the bottom of the panel.

The face of the trailer shall be delineated on a permanent basis by affixing retro-reflective material, known as conspicuity material, in a continuous line as seen by oncoming drivers.

A portable changeable message sign may be used to simulate an arrow panel display."

652.2.4 Other Devices

The eighth paragraph is deleted and replaced with Special Provision Section 652, Maintenance of Traffic (Portable Changeable Message Sign).

652.2.5 Safety Vests

This Subsection is amended by the addition of the following:

All jobsite personnel shall wear a safety vest labeled as ANSI 107-2004 standard performance for Class 3 risk exposures. This requirement also applies to truck drivers and equipment operators when out of an enclosed cab.

652.2.6 Signs

The use of temporary plaques to cover text or to change text will not be allowed. All signs shall have a uniform face.

652.4 Flaggers

Replace the first paragraph with the following; "The Contractor shall furnish flaggers as required by the TCP or as otherwise specified by the Resident. All flaggers must have successfully completed a flagger test approved by the MaineDOT and administered by a MaineDOT-approved Flagger-Certifier who is employing that flagger. All flaggers must carry an official certification card with them while flagging that has been issued by their employer. Flaggers shall wear safety apparel meeting ANSI 107-2004 Class 3 risk exposure that clearly identifies the wearer as a person, and is visible at a minimum distance of 300 m [1000 ft], and shall wear a hardhat with 360° retro-reflectivity. Retro-reflective or flashing SLOW/STOP paddles shall be used, and the flagger station shall be illuminated to assure visibility in accordance with 652.6.2."

Second paragraph, first sentence; change "…have sufficient distance to stop before entering the workspace." to "…have sufficient distance to stop at the intended stopping point."

Third sentence; change “At a spot obstruction…” to “At a spot obstruction with adequate sight distance,…”.

Fourth paragraph, delete and replace with “Flaggers shall be provided as a minimum, a 10 minute break, every two-hours and a 30-minute or longer lunch period away from the work station. Flaggers may only receive one unpaid break per day; all other breaks must be paid. Sufficient certified flaggers shall be available onsite to provide for continuous flagging operations during break periods. If the flaggers are receiving the appropriate breaks, breaker flagger(s) shall be paid starting two-hours after the work begins and ending two-hours before the work ends. A maximum of one breaker per six flaggers will be paid (one breaker flagger for two to six flaggers, two breaker flaggers for seven to 12 flaggers, etc)”.

652.63 Traffic Coordinator

The Contractor shall submit to the Resident for approval a list of traffic control personnel assigned to the Project including qualifications, certifications and experience.

The Traffic Coordinator duties shall include, but are not necessarily limited to:

a. Developing, in conjunction with the Resident and Project superintendent, a traffic control program for the days’ work activities which will facilitate traffic in a safe and efficient manner;

b. Insure that all traffic control implements (signs, arrow boards, barrels, etc.) are on-site so the traffic program can be implemented effectively;

c. Insure a safe and effective setup or take-down of all signing implements to least impact the traveling motorist; and,

d. Working knowledge of construction signing/traffic control requirements in conformance with the latest issued Manual on Uniform Traffic Control Devices.

SPECIAL PROVISION

SECTION 652

MAINTENANCE OF TRAFFIC

(Specific Project Maintenance of Traffic Requirements)

This Specification describes the specific project maintenance of traffic requirements for this Project.

The following minimum traffic requirements shall be maintained:

Lunts Hill Road and Route 126 Traffic Control Requirements

Two-lane traffic shall be maintained on Lunts Hill Road and Route 126 at all times, unless otherwise approved by the Resident. Alternating one way work zones will be allowed for the installation of Bridge Overpass-Mounted Guide Sign Supports, if requested in advance. Shoulder closures and alternating one way work zones on both Lunts Hill Road and Route 126 shall be in accordance with the latest version of the Manual of Uniform Traffic Control Devices (MUTCD) and details shown on the Plans with the exception of installing and removing traffic control devices. The Resident shall notify the Town of West Gardiner.

Temporary Toll Plaza Lane Closures

Two toll plaza lanes shall remain open at all times from 05:00 a.m. to 07:00 p.m. unless approved.

Temporary toll plaza lane closures may be required for lanes not designated for long term closure on the Maintenance of Traffic Control Plans for Phases 1 or 2. The following minimum requirements shall be maintained:

Plaza lanes shall remain available for opening at all times except when the Contractor is performing work in or near toll lanes such that appropriate access to the lane entry or departure is constrained by Contractor activities, or adjacent to or directly over the plaza lanes. A plaza lane closure is required when danger to the traveling public, other Authority contractors or Authority employees may exist. The potential of any material falling onto the roadway shall be considered a potential danger. This shall include, but not necessarily be limited to, demolition debris, water, tools, equipment and material.

A plaza lane closure will be required whenever men or equipment will be present in a plaza lane or when regular vehicular access into or out of a toll lane is impeded by the Contractor. The Authority may also require adjacent lanes to be closed to protect the traveling public or Authority employees. Temporary plaza lane closures are allowed from 07:00 p.m. to 05:00 a.m.. These hours may be adjusted by the Resident based on the daily traffic volumes. Plaza lane closures not completely removed by the time specified will be subject to a rental fee

of $500.00 per 10 minutes for every 10 minute increment beyond the specified ending time for each lane. Temporary plaza lane closures will not be allowed during periods of inclement weather as determined by the Authority and will not be allowed on Saturday, Sundays, and Holidays. The Authority reserves the right to order removal of approved temporary plaza lane closures.

Requests for temporary traffic lane closures shall be submitted to the Resident for approval. The Resident is required to receive approval from the Maine Turnpike Authority's Plaza Supervisor for all plaza lane closures. The request shall be submitted to the Plaza Supervisor by the Resident at least one working week prior to the day of the requested plaza lane closure. All requests must be received by 12:00 p.m. noon to be considered as received on that day. Requests received after 12:00 p.m. shall be considered as received the following day. The Contractor shall plan the work accordingly.

Wide load lanes (Toll Plaza Lanes 1 and 8) may be closed when wide loads are not permitted on the Turnpike by the Authority after Phase 1. The temporary wide load lane closures must be scheduled one week in advance, and occur outside of the various Holiday restrictions.

Maine Turnpike Traffic Control Requirements

Two lanes of traffic shall be maintained on the mainline in both northbound and southbound directions except when one lane of traffic is allowed by these Specifications and Plans.

Construction activities will require a combination of lane closures on the mainline and at the West Gardiner toll plaza. Maintenance of traffic control plans have been developed for Phases 1 and 2 to facilitate the construction within the plaza area. For all other operations, standard lane or shoulder closures shall be developed by the Contractor from the typical details provided and shall not conflict with traffic control setups for Phases 1 and 2. This plan shall be approved by the Resident prior to start of work. Unless approved by the Resident, all operations requiring right lane or shoulder closures shall not occur during Phase 2. Travel lanes may not be impeded by traffic control devices until the time frames specified for each activity.

Work activities within established work zones are allowed 24-hours a day, with the exception of sheet pile driving, erection or removal of structural steel and equipment moves.

There shall be a minimum of one lane of mainline traffic maintained in each direction at all times. A minimum travelway width of 14 feet is required for all open lanes during construction operations. Lanes may be striped no narrower than 11 feet wide.

Erection or removal of structural steel and overhead signs is allowed nightly between the hours of 10:00 p.m. and 5:00 a.m. with traffic stoppages (maximum stoppage of 25 minutes). Traffic stoppages are not allowed during holidays.

All stoppages, equipment moves, lane closures and shoulder closures are subject to Subsection 101.2, Definition, and holiday periods.

Temporary mainline or toll lane closures shall be removed if construction is not ongoing. Unattended lane closures are not allowed unless included in the Contract language or approved by the Resident as a long-term traffic control operation.

652.7 Method of Measurement

The following paragraph is added:

Traffic control devices required to complete the work will be measured for payment under their respective pay items. Installation, maintenance, and removal of traffic setups and the Contractor's dedicated traffic coordinator will not be measured separately for payment, but shall be incidental to Item 652.361, Maintenance of Traffic Control Devices.

SPECIAL PROVISION

SECTION 652

MAINTENANCE OF TRAFFIC

(Temporary Mainline Lane Closures)
(Lane Closure Installation and Removal Procedures)
(Temporary Mainline Shoulder Closures)
(Work Requiring Complete Stoppages of Traffic)
(Short-Term or Work Hour Speed)

This Section outlines the minimum requirements that shall be maintained for working on, over, or adjacent to the Maine Turnpike roadway.

General

Two travel lanes in each direction (each direction being 24 feet wide shall be maintained at all times except while performing work in a designated lane, directly over or adjacent to traffic, and during the placement and removal of traffic control devices).

Temporary Mainline Lane Closures

A minimum width of 14 feet is required for all lane closures.

A lane closure is required when a danger to the traveling public may exist. The potential of any material falling onto the roadway shall be considered a potential danger. This shall include, but not necessarily be limited to, demolition debris, water, tools, equipment and materials.

A lane closure will be required whenever workers or equipment will be present within four feet of a travel lane. Dump trucks shall be parked at least six feet from the travel lane when being loaded. Temporary lane closures will only be allowed at the times outlined in Special Provision Section 652, Specific Project Maintenance of Traffic Requirements. These hours may be adjusted based on the traffic volume each day by the Resident.

The lane closure setup may not begin until the beginning time specified. Lane closures that are setup early or that remain in place outside of the approved period shall be subject to a lane rental fee of $500 per five minutes for every five minutes outside of the approved time. The installation of the construction signs will be considered setting up the lane closure. Removal of the last construction sign will be considered the removal of a lane closure. Construction signs shall be installed immediately prior to the start of the lane closure and shall be promptly removed when no longer required. The installation and removal of a lane closure including signs, channelizing devices and arrow boards shall be a continuous operation. The Authority reserves the right to order removal of an approved lane closure.

The Authority desires to minimize the number of daytime lane closures and the number of times that a complete stoppage of traffic is required. The Contractor is encouraged to schedule their work so that the interference with the flow of traffic will be minimized. Lane closures will not be allowed until traffic associated with complete stoppages of traffic has cleared. Complete stoppages of traffic or lane closures may not be allowed on a particular day if another complete stoppage of traffic has been previously approved for another project.

The following is a partial list of activities requiring lane closures. Lane closures may be required for other activities as well:

- Median Opening Construction
- Removal of trees and chips from the cleared area.
- Drainage culverts across mainline.
- Installation of temporary and permanent barrier.
- Full depth sawcut.
- Paving adjacent to active travel lane.
- Loading of trucks within four feet of a travel lane.
- Bridge Mounted, Cantilever and Overhead Sign Structure construction activities adjacent to a travel lane

Lane closures shall be removed if work requiring the lane closure is not ongoing unless included in the Contract as a long-term traffic control requirement or approved by the Resident.

The Resident is required to receive approval from the Authority for all lane closures. The request shall be submitted to the Authority by the Resident at least two working days prior to the day of the requested lane closure. All requests must be received by 12:00 p.m. to be considered as received on that day. Requests received after 12:00 p.m. shall be considered as received the following day. The Contractor shall plan the work accordingly.

Lane Closure Installation and Removal Procedure

The Contractor will follow the following procedures when closing any travel lanes on the turnpike roadways:

1. The sign package shall be erected starting with the first sign and proceeding to the start of the taper. The sign crew shall erect signs with the vehicle within the outside shoulder;

2. Position the arrow board with the proper arrow at the beginning of the taper; and,

3. When arrow board is in place, continue with the drums/cones to secure the work area.

To dismantle the lane closure, start with last drums/cone placed and work in reverse order until all the drums are removed. The arrow board which was installed first shall be the final traffic control device removed, excluding the sign package. The remaining sign package shall be picked-

up starting with the first sign placed and continuing in the direction of traffic and with the vehicle in the outside shoulder.

Temporary Mainline Shoulder Closures

Temporary mainline shoulder closures will only be allowed as outlined in Special Provision Section 652, Specific Project Maintenance of Traffic Requirements. Temporary shoulder closures are anticipated at locations where Contractor access to the mainline is required.

Temporary shoulder closures with plastic drums shall be removed at the end of the workday. Temporary shoulder closures with plastic drums will not be allowed during periods of inclement weather as determined by the Authority.

Work Requiring Complete Stoppages of Traffic

Complete stoppages of traffic will only be allowed as outlined in Special Provision Section 652, Specific Project Maintenance of Traffic Requirements, or as approved by the Resident.

The following is a partial list of activities requiring complete stoppages of traffic. Complete stoppages of traffic may be required for other activities as well:

- Moving of heavy or slow equipment across or on the travel lanes (stoppage less than five minutes).
- Erection or removal of overhead or cantilever sign structures and bridge mounted signs (stoppage less than 25 minutes).

State Police will be used to stop traffic. Cost for State Police will be the responsibility of the Authority. The times requested for trooper assisted equipment moves by on-duty troopers cannot be guaranteed. The MTA will not be held responsible for any delays or costs associated with the delay, postponement or cancellation of an on-duty trooper assisted equipment move.

The Erection or Removal of Structural Steel/ Space Frames/ Overhead Signs

The erection or removal of structural steel, overhead signs, and space frames will only be allowed at times outlined in Section 652, Specific Project Maintenance or Traffic Requirements. Traffic shall be stopped and may be held for periods of up to 25 minutes during these operations. Before the roadway is reopened, all materials shall be secured so they will not endanger traffic passing underneath.

The Contractor will reimburse the Authority at the rate of $2,500.00 per five-minute period for each roadway (northbound and southbound), in excess of the 25 minute limit. Total penalty shall be deducted from the next pay estimate.

Equipment Moves

The complete stoppage of traffic for an equipment move (including delivery of materials to the median) will be considered for approval if the action can not reasonably be completed with the erection of a lane closure. Contractor shall be responsible for the installation of Signs CS-3, "Expect Stopped Traffic" and Signs W3-4 "Be Prepared to Stop", in accordance with the Single Lane Closure Detail immediately prior to the equipment move. These signs shall be covered when not applicable.

The maximum time for which traffic may be stopped and held for an equipment move at any single time shall be five minutes. The duration shall be measured as the time between the time the last car passes the Resident until the time the Resident determines that all travel lanes are clear. The traffic shall only be stopped for the minimum period of time required to complete the approved activity. The Contractor shall reimburse the Authority at a rate of $500 per minute for each minute in excess of the five-minute allowance.

Unapproved movement of heavy equipment across the travel lanes shall be considered a violation of the Maintenance of Traffic Requirements and is subject to the fines of $500 per minute or portion thereof.

Request for Complete Stoppage of Traffic

A request for a complete stoppage of traffic must be submitted to the Resident for approval. The Resident is required to receive approval from the Authority for all stoppages. The request shall be submitted to the Authority by the Resident at least five working days prior to the day of the requested stoppage of traffic and two days for a stoppage less than five minutes. All requests must be received by 12:00 p.m. noon to be considered as received on that day. Requests received after 12:00 p.m. shall be considered as received the following day. The Contractor shall plan the work accordingly.

Short-Term or Work Hour Speed

A short-term or work hour speed (Fines Doubled) is a regulatory speed limit that indicates the maximum legal speed through a work zone which is lower than the normal posted speed. The speed limit shall be displayed by black on white speed limit signs in conjunction with a black on orange "Work Zone" plate. Speed limit signs shall be installed at each mile within the work zone. The reduced speed zone shall be at least 1,500 feet long. Any existing regulatory speed limit signs within the reduced speed zone shall be covered once the reduced speed signs have been erected.

Two orange fluorescent flags shall be attached to all speed limit signs that are uncovered for a period of time exceeding one week. This work shall be incidental. Signs that are uncovered on a regular basis are not required to have the supplemental flags.

The reduced speed limit signs shall only be used during the following circumstances unless approved by the Resident:

- Workers are adjacent to traffic
- Travel lane is closed

The signs shall be covered or removed when not applicable. The covering and uncovering of signs shall be included for payment under Maintenance of Traffic. Signs relating to reduced speed shall be installed in accordance with the details. The Contractor shall note that signs installed behind concrete barrier in the outside shoulder are required to be clearly visible to all drivers at all times.

Temporary toll plaza lane closures may be required for lanes not designated for long term closure on the Maintenance of Traffic Control Plans for Phases 1 or 2. The following minimum requirements shall be maintained:

Plaza lanes shall remain available for opening at all times except when the Contractor is performing work in or near toll lanes such that appropriate access to the lane entry or departure is constrained by Contractor activities, or adjacent to or directly over the plaza lanes. A plaza lane closure is required when danger to the traveling public, other MTA contractors or MTA employees may exist. The potential of any material falling onto the roadway shall be considered a potential danger. This shall include, but not necessarily be limited to, demolition debris, water, tools, equipment and material.

A plaza lane closure will be required whenever workers or equipment will be present in a plaza lane or when regular vehicular access into or out of a toll lane is impeded by the Contractor. The Authority may also require adjacent lanes to be closed to protect the traveling public or Authority employees. Temporary plaza lane closures are allowed from 07:00 pm to 05:00 am. These hours may be adjusted by the Resident based on the daily traffic volumes. Plaza lane closures not completely removed by the time specified will be subject to a rental fee of $100.00 per 10 minutes for every 10 minute increment beyond the specified ending time for each lane. Temporary plaza lane closures will not be allowed during periods of inclement weather as determined by the Authority and will not be allowed on Saturday, Sundays, and Holidays. The Authority reserves the right to order removal of approved temporary plaza lane closures.

Requests for temporary traffic lane closures shall be submitted to the Resident for approval. The Resident is required to receive approval from the Maine Turnpike Authority's Plaza Supervisor for all plaza lane closures. The request shall be submitted to the Plaza Supervisor by the Resident at least one working week prior to the day of the requested plaza lane closure. All requests must be received by 12:00 p.m. noon to be considered as received on that day. Requests received after 12:00 p.m. shall be considered as received the following day. The Contractor shall plan the work accordingly.

Wide load lanes (Toll Plaza Lanes 1 and 8) may be closed when wide loads are not permitted on the Turnpike by the Authority after Phase 1. The temporary wide load lane closures must be scheduled one week in advance, and occur outside of the various Holiday restrictions.

SPECIAL PROVISION

SECTION 652

MAINTENANCE OF TRAFFIC

(Flashing Beacon - Solar Powered)

652.1 Description

The following paragraphs are added:

This special provision provides for the installation of two dual head flashing beacons at the end of each concrete barrier separating the cash lanes from the open road tolling lanes.

All provisions of Section 652, except as modified or changed below, shall apply.

1. Contractor shall furnish (12 inch) amber flashing beacons powered by solar panel with battery backup. Units shall have internal programmable timings for flash interval.
2. The beacons shall be mounted (11.5 feet) above the elevation of the adjacent edge of pavement.

652.7 Method of Measurement

The following paragraphs are added:

Flashing beacons will be measured by each unit authorized and installed on the Project. The following list of major materials applies:

- 2 – P & K signal pole model SP-114 or approved equal.
- 2 – 2 inch amber flashing beacon powered by solar panel. Units shall be JSF Technologies FL Series -24 Hour Flashing Beacon FL -2400 or an approved equal.

652.8 Basis of Payment

The following paragraphs are added:

The accepted quantity of Flashing Beacon – Solar Powered will be paid for at the Contract unit price per unit. This price shall be full compensation for all labor, materials and equipment necessary to furnish and install Flashing Beacons.

Payment will be made under:

Pay Item	Pay Unit

652.301	Flashing Beacon – Solar Powered	Each

SPECIAL PROVISION

SECTION 652

MAINTENANCE OF TRAFFIC

(Portable-Changeable Message Sign)

652.2.4 Other Devices

The eighth paragraph is deleted and replaced with the following:

Portable-Changeable Message Signs (PCMS) will be furnished by the Contractor and shall be Ver-Mac PCMS-1210 or an approved equal. PCMS's shall be located and relocated to locations approved by the Resident within the Project limits for the duration of the Project.

Features to the Ver-Mac PCMS shall include:

- An all LED display.
- Be legible from a distance of 1,000 feet.
- Have three (3) lines available for messages.
- Be NTCIP compliant (NTCIP 1203).
- Be capable of being programmed by a remote computer via a data (IP over Cell) cellular modem connection.
- Have GPS location capability, by GPS modem or by adding on a GPS device capable of providing GPS location remotely to the MTA Communications' Center.
- Be programmable by Vanguard Software by Daktronics.

The Contractor shall complete and/or provide the following:

- Submit a catalog cut shop drawing to the Resident of all proposed equipment for review and approval.
- Establish and pay for a data cellular account so that PCMS may be remotely programmed and operated from the Authority's Communications' Center.
- Provide to the Authority technical support from the PCMS manufacturer that may be necessary to integrate the PCMS into the MTA software platform (Vanguard Software by Daktronics).
- Provide the manufacturer's software necessary to change the PCMS messages remotely from the Authority's Communications' Center and the Resident's computer if necessary or requested.
- Provide training on the operation of the PCMS to the Resident and the Authority's Communications' Center representative.
- Make all PCMS on the Project work site available to the Authority for any/all emergency situations as defined by the Authority. This shall include the preemption of any messages running at the time of need as approved by the Authority and the Resident.

The Contractor shall also:

- Furnish, operate, relocate and maintain the PCMS as approved by the Resident.
- Be responsible for the day to day programming and operation of the PCMS for Project purposes.

The PCMS(s) shall be on-site, with data cellular account established, GPS location capable, and all training required complete within one month after mobilization or seven days prior to implementing traffic shifts, detours or stoppages, whichever is sooner. Implementation of traffic shifts, detours, or stoppages of traffic will not be allowed without PCMS boards on-site with the specified Authority's Communications' Center Software Platform integration and training.

652.7 Method of Measurement

The following sentence is added:

Portable-Changeable Message Sign(s) will be measured for payment by each unit furnished, installed and maintained.

652.8 Basis of Payment

The following paragraphs are added:

The accepted quantity of PCMS will be paid for at the Contract unit price each. This price shall be full compensation for furnishing, relocating, maintaining and removing the PCMS. The price also includes all costs associated with setting-up and paying for a data cellular account, technical support, training and any costs associated with the GPS location device.

Progress payment of each PCMS shall be pro-rated over the duration of the Contract. Contract duration shall be from the specified Contract start date to substantial completion or Contract completion, whichever is sooner.

For a PCMS that fails to operate when required, the Contractor will be given 24-hours to repair or replace the PCMS. For periods longer than 24-hours, payment will be reduced based on the pro-rated time that the PCMS is out of service.

Payment will be made under:

Pay Item		Pay Unit
652.41	Portable-Changeable Message Sign	Each

SPECIAL PROVISION

SECTION 652

MAINTENANCE OF TRAFFIC

(Truck Mounted Attenuator)

652.1 Description

The following sentence is added:

The Contractor shall furnish, operate and maintain a truck and truck mounted attenuator.

652.2.1 Truck Mounted Attenuator

The truck mounted attenuator system shall conform to the following requirements:

- Truck and attached attenuator shall conform to the NCHRP Report 350, Test Level 3 criteria.
- A mounted revolving amber light or amber strobe light with 360-degree visibility.
- An arrow light bar fixed to the vehicle.
- The attenuator shall be mounted to a vehicle with a minimum weight of 10,000 lbs.

652.3.7 Operations

The Contractor shall manage the operation of the truck mounted attenuator. The truck mounted attenuator should be utilized in lane closures and other construction operations where workers are exposed to traffic and not protected by positive means. The operation of the vehicle shall be in accordance with the Manual of Uniform Traffic Control Devices and the manufacturer's recommendation.

652.7 Method of Measurement

The following sentence is added:

Truck mounted attenuator shall be measured for payment by the calendar day for each calendar day that the unit is used on a travel lane or shoulder on the project.

652.8.2 Basis of Payment

The following paragraphs are added:

The Truck Mounted Attenuator(s) will be paid for at the Contract unit price per calendar day. This price shall include all costs associated with the use of the vehicle. Payment shall

include operator, fuel, truck, maintenance, flashing lights, arrow board and all other incidentals necessary to operate the vehicle.

The unit price noted in the proposal sheet is fixed by the Maine Turnpike Authority and may not be altered. Altering of the unit price will be a non-curable bid defect.

Payment will be made under:

Pay Item		Pay Unit
652.45	Truck Mounted Attenuator	Calendar Day

SPECIAL PROVISION

SECTION 655

ELECTRICAL WORK

655.01 Description

All work shall be governed by the Standard Specifications except for that work which applies to those sections of the Standard Specifications which are amended by the following modifications, additions and deletions.

Specifically, for the electrical work (in addition to standards specified in individual work sections), the following standards are imposed, as applicable to the work in each instance:

- NEC, National Electrical Code (NFPA No. 70)
- NFPA No. 101, Life Safety Code
- ANSI C 2, National Electrical Safety Code
- ANSI C 73, Dimensions of Attachment Plugs and Receptacles
- NECA standards for installation
- NEMA standards for materials and products
- UL, Underwriters Laboratories

The Contractor will warranty the material supplied by them and their workmanship for a minimum of one (1) year.

655.02 General Provisions

RELATED DOCUMENTS

General provisions of this Contract, including General Provisions and Special Provisions, apply to work of this section.

SUMMARY

This Section specifies several categories of provisions for electrical work, including:

1. Certain adaptive expansions of requirements specified in the Special Provisions.
2. General performance requirements within the electrical systems as a whole.

3. General work to be performed as electrical work, because of its close association.

SUMMARY OF ELECTRICAL WORK

General Outline: The facilities and systems of the electrical work can be described (but not by way of limitation) as follows:

1. Installation of electrical control and power distribution systems, including the electrical connections to new equipment.

2. Installation of toll revenue collection systems hardware.

3. Installation of temporary and interim provisions.

Permits and Fees: This work shall include the procurement of and payment for any and all permits and fees required for the performance of the electrical work including those that may be required from local utilities for services.

COORDINATION OF ELECTRICAL WORK

Refer to Part II, Special Provisions for general coordination requirements applicable to the entire work. It is recognized that the Contract documents are often diagrammatic in showing certain physical relationships, which shall be established within the electrical work, and in its interface with other work including utilities and mechanical work, and that such establishment is the exclusive responsibility of the Contractor.

Arrange electrical work in a neat, well organized manner with conduit and similar services running parallel with primary lines of the building construction, and with a minimum of 7'0" overhead clearance where physical limitations permit.

Locate operating and control equipment properly and in accordance with the NEC, to provide easy access, and arrange entire electrical work with adequate access for operation and maintenance.

Coordination of Options and Substitutions: Where the Contract documents permit the selection from several product options, and where it becomes necessary to authorize a substitution, the Contractor shall not proceed with purchases until coordination of all interface requirements has been checked and satisfactorily established. Substitutions are subject to approval by the Authority or designated representative per the requirements of the Contract documents.

SUBMITTALS FOR ELECTRICAL WORK

For electrical work, submittals are required for each category of items listed below.

- Shop Drawings, Product Data, Certifications, Test Reports, Warranties, Guarantees, Installation Drawings, and Work Checklist in Appendix E.
- Installation Drawings shall be modified and submitted to reflect any changes during installation of electrical equipment.

The Contractor, prior to forwarding shop drawings and product data to the Resident, shall check all conditions, make all corrections and sign and date each set. No shop drawings will be reviewed by the Resident without the signature of the Contractor, which shall signify that he has checked the submittals.

PRODUCTS, ELECTRICAL WORK

Refer to Divisions 600 and 700 of the Standard Specifications for general requirements on products, materials and equipment. The following provisions expand or modify the requirements as applicable to electrical work:

Compatibility: Provide products, which are compatible with other products of the electrical work and with other work requiring interface with the electrical work, including electrical connections and control devices. For exposed electrical work, coordinate colors and finishes with other work.

FLOOR AND WALL PENETRATIONS

Where electrical materials penetrate walls or floors that are a part of a fire separation or assembly, the opening shall be effectively sealed to maintain separation integrity. Openings shall be closed using General Electric RTV850 Silicone RTV Foam, or approved equal to form a fire rated, water-tight seal, and installation with automatic mixing only. The penetration seal materials shall pass ASTM E 814 (UL 1479) Standard Method of Fire Tests for Through Penetration Fire Stops up to the required fire resistance.

Where conduits penetrate a wall, floor or ceiling that is part of a weatherproof barrier, a non shrink weatherproof type grout and or Sika 1A caulking shall be used, in accordance with manufacturer's installation instructions.

All work, materials, labor to fireproof or waterproof conduit penetrations shall be incidental to the various pay items

EXCAVATING FOR ELECTRICAL WORK

The work of this article is defined to include whatever excavating and back-filling is necessary to install the electrical work. Coordinate the work with other excavating and back-filling in the same area, including de-watering; flood protection provisions, and other temporary facilities.

Coordinate the work with other work in the same area, including other underground services (existing and new), paving, and concrete work. Coordinate with weather conditions and provide temporary facilities needed for protection and proper performance of installations, excavating and back-filling.

General Standards: Except as otherwise required, comply with the applicable provisions of Divisions 600 and 700 of the Standard Specifications for information related to electrical-work excavating and back-filling. Refer instances of uncertain applicability to the Resident for resolution before proceeding.

ELECTRICAL WORK CLOSEOUT

Construction Equipment: After completion of performance testing and the Authority's performance testing, remove Contractor's tools, test facilities, construction equipment and similar devices and materials used in execution of the work but not incorporated in the work.

ELECTRICAL SYSTEM TEST

The Contractor shall submit certification of the adequacy of each power and/or communications circuit for the following sub-systems, where applicable:

- ORT Lane Controller Cabinets
- Lane Controller (LC) System
- Automatic Vehicle Identification (AVI) Readers
- Automatic Vehicle Identification (AVI) Antennas
- Digital Video Audit System (DVAS)
- Traffic Control Pedestal (TCP)
- Vehicle Capture and Recognition System (VCARS)
- Canopy Override Switch (COS)
- Manual Lane Terminal (MLT)
- Receipt Printer (RP)

Verification of the electrical system should be done by turning on/off assigned circuit breakers prior to attachment of equipment to validate panel schedule and that proper voltage is present at termination.

COMMUNICATIONS SYSTEMS

Provide outlets, wireways, device plates, etc., in conformance with the applicable sections of this specification, as may be required.

Wireways shall be in accordance with "Wireways" part of the Technical Specifications and NEC and the following special conditions:

- Minimum size shall be 1 inch unless otherwise noted.

- No more than two standard factory 90-degree bends per 100 feet or three 90 degree 24 inch radius bends and as to adhere to minimum manufacturers bend radius's on data cables.

655.03 Electrical Wireways

RELATED DOCUMENTS

General provisions of the Contract, including General Provisions and Special provisions, apply to work of this section.

SUMMARY

The requirements of this section apply to electrical wireway work specified elsewhere in these Specifications.

The types of electrical wireways required for the project may include the following:

- Electrical metallic tubing.
- Intermediate metal conduit.
- Liquid tight metallic flexible conduit.
- Galvanized rigid metal conduit.
- Nonmetallic conduit. (PVC)
- Surface metal wireways.

QUALITY ASSURANCE

Manufacturers: Firms regularly engaged in manufacture of electrical wireways of types and capacities required, whose products have been in satisfactory use in similar service for not less than three years.

Contractor: A firm with at least three years of successful installation experience on projects with electrical wiring installation work similar to that required for the project. Under this definition, Contractor can also be a subcontractor to the General Contractor for the Project.

NEMA Compliance: Comply with applicable portions of National Electrical Manufacturers Association standards pertaining to nonmetallic duct and fittings for underground installation.

UL Labels: Provide electrical wireways, which have been listed and labeled by Underwriters Laboratories.

NEC Compliance: Comply with National Electrical Code (NFPA No. 70) as applicable to construction and installation of electrical wireways.

PRODUCT DELIVERY, STORAGE AND HANDLING

Provide color-coded end-cap thread protectors on exposed threads of threaded metal conduit. Handle conduit and tubing carefully to prevent bending and end-damage and to avoid scoring finish. Store pipe and tubing inside and protect from weather. When necessary to store outdoors, elevate well above grade and enclose with durable, watertight wrapping.

MATERIALS AND COMPONENTS

For each electrical wireway system required, provide a complete assembly of conduit or tubing with fittings including, but not necessarily limited to, connectors, nipples, couplings, elbows, expansion fittings, supports, and other components and accessories as needed to form a complete system of type required.

Metal Conduit, Tubing and Fittings: Provide metal conduit, tubing and fittings of type, grade, size and weight (wall thickness) required for each service. Where type and grade are not indicated, provide proper selection determined to fulfill wiring requirements, and comply with National Electrical Code for electrical wireways.

Rigid Steel Conduit: FS WW-C-581 and ANSI C80.1.

Intermediate Steel Conduit: FS WW-C-581 and ANSI C80.1.

EMT- Electrical Metallic Tubing: FS WW-C-563A, ANSI C80.3 and UL 797. Installation shall comply with NEC Article 348. Provide high quality, hot dip galvanized, electrical metallic tubing conduit and fittings of type, size and weight (wall thickness) required for each application. EMT shall only be used in enclosed areas that are not subject to possible collision or interference. Where type and grade are not indicated, provide proper selection determined to fulfill wiring requirements, and comply with National Electrical Code. Rain-tight compression type connectors shall be used in all cases. Set-screw type conduit connections or fittings shall not be used.

Galvanized Rigid Metal Conduit Fittings: FS W-F-408, Type and Classes as required.

Liquid-tight Flexible Metal Conduit: Provide liquid-tight flexible metal conduit comprised of single strip, continuous, flexible interlocked, double-wrapped steel, galvanized inside and outside; forming smooth internal wiring channel; with liquid-tight jacket of flexible polyvinyl chloride (PVC).

Liquid-tight Flexible Metal Conduit Fittings: FS W-F-406, Type as required.

Nonmetallic Conduit and Fittings (PVC): Provide nonmetallic conduit and fittings of type, size and weight (wall thickness) required for each service. Where type and grade are not indicated, provide proper selection determined to fulfill wiring requirements, and comply with National Electrical Code for electrical wireways, and with type selected in accordance with applicable standards.

Surface Mounted Metallic Wireways: Provide wireways for surface mounting as required. Wireways shall be of rectangular cross section of size as required by the National Electrical Code (NFPA No. 70) for conductor fill. Wireways shall be of a design to accommodate wiring devices required. Finish shall be galvanized.

Conduit and Tubing and Wireway Accessories: Provide conduit, tubing and wireway accessories including straps, hangers, angles expansion and deflection fittings as recommended by conduit, tubing and wireway manufacturers.

Mounting strut materials and hardware: Provide corrosion-resistant hot-dip galvanized strut members and stainless steel hardware for all equipment and cabinet mounting applications.

INSTALLATION

Install conduit and tubing products as required, in accordance with manufacturer's written instructions, applicable requirements of NEC and National Electrical Contractors Association's "Standard of Installation", and in accordance with recognized industry practices to ensure that products serve intended function.

Complete the installation of electrical wireways before starting installation of cables within wireways.

Where conduit is installed in earth, it shall be Polyvinyl Chloride (PVC) conduit as specified in the Plans.

PVC conduit shall be used in concrete slabs on grade and where noted in the Plans. Metallic conduit is not permitted in the concrete slabs or in substitution of any PVC conduit locations specified on the Plans without specific authorization by the Authority.

Wherever possible, install horizontal wireway runs above water and steam piping.

Install surface metal wireways and accessories as required on elevations. Carefully coordinate with interior finishes and furnishings.

At any point where a conduit crosses an expansion joint, or where movement between adjacent sections of conduit can be expected, bronze or alloy expansion fittings shall be installed equal to Type AX as made by the O.Z. Electrical Manufacturing Co., Inc., or equivalent by Hope or Spring City unless such locations are within conduit specified as non-metallic. Such locations shall be handled with a non-metallic equivalent or as specified in Plans.

The Contractor shall submit a proposed method of attaching all ancillary components to the space frame to the Resident for approval. The proposed attachment method shall not require drilling, welding or other attachment methods that will damage the space frame or its galvanized coating. Any areas of galvanized coating that are damaged by the Contractor during installation of ancillary components shall be repaired in accordance with ASTM A780.

655.04 Wires and Connectors

RELATED DOCUMENTS

The general provisions of the Contract, including General Provisions and Special Provisions, apply to the work specified in this section.

SUMMARY

The requirements of this section apply to the wire work specified elsewhere in these Specifications.

The applications for wire and connectors required on the project may include the following:

- Power distribution circuitry.
- Lighting circuitry.
- Appliance and equipment circuitry.

QUALITY ASSURANCE

Manufacturers: Firms regularly engaged in the manufacture of electrical products of the types and ratings required, whose products have been in satisfactory use in similar service for not less than 3 years.

Contractor: A firm with at least three years of successful installation experience on projects with electrical wiring installation work similar to that required for the project. Under this definition, Contractor can also be a subcontractor to the General Contractor for the Project.

NEC Compliance: Comply with National Electrical Code (NFPA 70) as applicable to construction and installation of electrical cable, wire and connectors.

UL Labels: Provide electrical cable, wire and connectors, which have been listed and labeled by Underwriters Laboratories.

NEMA/ICEA Compliance: Comply with National Electrical Manufacturers Association/Insulated Power Cable Authorities Association Standards publications pertaining to materials, construction and testing wire cable, where applicable.

PRODUCT DELIVERY, STORAGE AND HANDLING

Provide factory-wrapped water-proof flexible barrier material for covering wire and cable on wood reels, where applicable; and weather resistant fiberboard containers for factory-packaging of cable, wire and connectors, to protect against physical damage in transit. Do not install damaged cable, wire or connectors; remove from project site.

Store wire and connectors in factory-installed coverings in a clean, dry indoor space which provides protection against the weather.

MANUFACTURERS

Provide products produced by one of the following or approved equal (for each type of cable, wire and connectors):

Cable and Wire:

- Anaconda Wire and Cable Co.
- Belden Corp.
- General Cable Corp.
- Phelps Dodge Cable and Wire Co.
- Wire and Cable Dept., General Electric Co.
- Rome Cable Corp.

Connectors:

- AMP Inc.
- Burndy Corp.
- Minnesota Mining and Mfg. Co.
- OZ/Gedney Co.
- Thomas & Betts Co.

WIRE AND CONNECTORS

Except as otherwise required, provide wire and connectors of manufacturer's standard materials, as required by published product information; designed and constructed as recommended by the manufacturer, and as required for the installation.

Wire:

Provide factory-fabricated wire of the size, rating, material and type as required for each service. Where not indicated, provide proper selection as determined by Installer to comply with installation requirements and with NEC standards. Select from only the following types, materials, conductor configurations, insulations, and coverings for 120/240 Volt circuits:

UL Type: THW. (Sizes #6 AWG wire and larger)

UL Type: THHW. (Sizes up to #4 AWG wire)

UL Type: USE. (Underground installation)

Material: Copper.

q Conductors: (AWG wire 20 to AWG wire 16).

Note: All low voltage signal conductors (including CAT5e and CAT6 data cables) shall be stranded. Conductors for underground, below grade, or in conduit to lane devices shall be OSP grade, gel filled. Interior building communications cables may be plenum rated for interior wall or cable tray applications.

Concentric-lay-stranded (standard flexibility) (AWG wire 14 and larger).

Interconnection for data communication shall be performed with cables that shall be submitted for approval. The general cable types are designated on the Plans/ Specifications. Minimum bend radius should meet the requirements of the manufacturer and the requirements of the system.

Wire shall be color-coded as noted in the wiring schedules provided in the Plans.

Lead-in cables to extend loop detectors shall be IMSA Type 50-2. Loop lead-in cables shall be manufactured with a size of #16 AWG.

Klik-Its (Power & Tel Enterprise Part #C8820) or approved equivalent shall be used at all loopwire splice locations. <u>All splices must be twisted, soldered and shrink-wrap waterproofed before enclosure is placed.</u>

Home run cables preferably should not be shielded. The use of shielded cable is acceptable provided neither end is grounded.

All cable labeling shall be coordinated with the requirements of the Authority's Toll System Integrator (SI).

INSTALLATION

Install electrical wire and connectors as required, in accordance with the manufacturer's written instructions, the applicable requirements of NEC and the National Electrical Contractors Association's "Standard of Installation", and in accordance with recognized industry practices to ensure that products serve the intended functions.

Coordinate cable and wire installation work with electrical wireway and equipment installation work, as necessary for proper interface.

All wire and cable shall be in first class condition when they are installed. Lo-leak lubricants manufactured for the purpose of a pulling lubricant may be used when necessary.

All wires shall be continuous from outlet and there shall be no unnecessary slack in the conductors.

FIELD QUALITY CONTROL

Prior to energizing, check wire for continuity of circuitry and for short circuits with ohmmeter type testing equipment. Correct malfunction when detected.

Subsequent to wire hook-ups, energize circuitry and demonstrate functioning in accordance with requirements.

655.05 Electrical Boxes and Fittings

RELATED DOCUMENTS

The general provisions of the Contract, including General Provisions and Special Provisions, apply to the work specified in this section.

SUMMARY

The types of electrical boxes and fittings required for the project may include the following:

- NEMA 4X Cabinet for ORT AVI Readers
- Outlet boxes
- Junction boxes
- Pull boxes
- Floor boxes
- Conduit bodies
- Bushings
- Locknuts

QUALITY ASSURANCE

Manufacturers: Firms regularly engaged in the manufacture of electrical units of types and sizes required, whose products have been in satisfactory use in similar service for not less than three years.

Contractor: A firm with at least three years of successful installation experience on projects with electrical installation work similar to that required for the project. Under this definition, Contractor can also be a subcontractor to the General Contractor for the Project.

NEC Compliance: Comply with National Electrical Code (NFPA 70) as applicable to construction and installation of electrical boxes and fittings.

U.L. Labels: Provide boxes and fittings, which have been listed and labeled by Underwriters Laboratories.

NEMA Compliance: Comply with National Electrical Manufacturers Association standards as applicable to nonmetallic fittings for underground installation.

NECA Standard: Comply with applicable portions of the National Electrical Contractors Association's "Standard of Installation".

MANUFACTURERS

Provide products produced by one of the following or approved equal (for each type of box and fitting):

ORT Control Cabinet:

- Hammond Manufacturing (provided by SI and installed by the Contractor)

Interior Outlet Boxes:

- Appleton Electric Co.
- Arrow Conduit and Fittings Corp.
- National Electric Products Co.
- OZ/Gedney Co.
- Steel City, Midland-Ross Corp.

Junction and Pull Boxes:

- Arrow-Hart, Inc.
- General Electric Co.
- OZ/Gedney Co.
- Square D Co.
- Unitil

Conduit Bodies:

- Appleton Electric Co.
- Crouse-Hinds Co.
- Killark Electric Mfg. Co.
- Pyle-National Co.

Bushings, Knockout Closures and Locknuts:

- Allen-Stevens Conduit Fittings Corp.
- Allied Metal Stamping, Inc.
- Appleton Electric Co.
- Carr Co.
- Raco, Inc.
- Steel City, Midland-Ross Corp.
- Thomas and Betts Co., Inc.

MATERIALS

ORT Control cabinet: shall be provided by the Authority's Toll System Integrator (SI) and installed by the Contractor. The following information is provided to assist the Contractor with

planning for the associated conduit and wiring work. The ORT Control Cabinet shall have dimensions of:

Height 6'-0"
Width 6'-0"
Depth 1'-6"

FABRICATED MATERIALS

Interior Outlet Boxes: Provide galvanized steel interior outlet wiring boxes, of the type, shape and size, including depth of box, to suit each respective location and installation; constructed with stamped knockouts in back and sides, and with threaded holes with screws for securing box covers or wiring devices.

Interior Outlet Box Accessories: Provide outlet box accessories as required for each installation, including mounting brackets, wallboard hangers, extension rings, fixture studs, cable clamps and metal straps for supporting outlet boxes, compatible with outlet boxes being used and meeting requirements of individual wiring situations. Choice of accessories is Installer's option. All covers for outlet boxes to be stainless steel.

Junction and Pull Boxes: Provide galvanized sheet steel or concrete junction and pull boxes as called for in the Plans with screw-on covers; of the type shape and size, to suit each respective location and installation; with welded seams and equipped with stainless steel nuts, bolts, screws and washers.

Conduit Bodies: Provide galvanized cast-metal conduit bodies, of the type, shape and size, to suit each respective location and installation, constructed with threaded conduit ends, removable cover, and corrosion-resistant screws.

Bushings, Knockout Closures and Locknuts: Provide corrosion-resistant punched-steel box knockout closures, conduit locknuts and malleable iron conduit bushings of the type and size to suit each respective use and installation.

Mounting strut materials and hardware: Provide corrosion-resistant hot dipped galvanized members and stainless steel hardware for all equipment mounting applications. Where strut material is exposed to the weather, and less than 10 feet off the ground, struts shall be stainless steel. When any galvanized strut member or hardware is cut or the galvanizing is compromised, the affected area shall be wire brushed and cleaned to bare metal and the area shall be given two coats of cold galvanizing (following application instructions).

INSTALLATION OF BOXES AND FITTINGS

Install all equipment cabinets in compliance with NEC requirements, in accordance with the manufacturer's written instructions and with recognized industry practices to ensure the boxes and fittings serve the intended purposes. Contractor shall coordinate all associated conduit, wiring and related work with the Resident and SI to confirm appropriate placement in coordination with

ORT Control cabinet installation. Given the final installation of the ORT Control cabinets will likely take place several weeks following the placement of the cabinets in the plaza tunnel, the Contractor shall work with the Resident to provide adequate protection of the cabinets until they are mounted in their final location.

Install electrical boxes and fittings in compliance with NEC requirements, in accordance with the manufacturer's written instructions and with recognized industry practices to ensure that the boxes and fittings serve the intended purposes:

Provide weatherproof outlets for interior and exterior locations exposed to weather or moisture.

Provide knockout closures to cap unused knockout holes where blanks have been removed.

Locate boxes and conduit bodies to ensure accessibility of electrical wiring.

All boxes shall be rigidly secured in position unless otherwise directed

Where standard boxes are not suitable, provide boxes of special design to suit space and function.

The Contractor shall submit a proposed method of attaching all ancillary components to the space frame to the Resident for approval. The proposed attachment method shall not require drilling, welding or other attachment methods that will damage the space frame or its galvanized coating. Any areas of galvanized coating that are damaged by the Contractor during installation of ancillary components shall be repaired in accordance with ASTM A780.

655.06 Wiring Devices

RELATED DOCUMENTS

The general provisions of the Contract, including General Provisions and Special Provisions, apply to the work specified in this section.

SUMMARY

Wiring devices are defined as single discrete units of electrical distribution systems, which are intended to carry but not utilize electric energy.

The types of electrical wiring devices required for this project include the following:

- Receptacles
- Switches
- Wall plates
- Plugs
- Connectors

- Breakers

QUALITY ASSURANCE

Manufacturers: Firms regularly engaged in manufacture of wiring devices, of types and ratings required, whose products have been in satisfactory use in similar service for not less than three years.

Contractor: A firm with at least three years of successful installation experience on projects with electrical installation work similar to that required for the project.

NEC Compliance: Comply with National Electrical Code (NFPA No. 70) as applicable to construction and installation of electrical wiring devices.

UL Labels: Provide electrical wiring devices, which have been tested, listed and labeled by Underwriters Laboratories.

NEMA Compliance: Comply with National Electrical Manufacturers Association standards for general- and specific-purpose wiring devices.

MANUFACTURERS

Provide products produced by one of the following:

- Arrow-Hart, Inc.
- Bell Electric Co.
- Bryant Electric Co.
- Crouse-Hinds Co.
- Cutler-Hammer, Inc.
- General Electric Co.
- Gould, Inc.
- Harvey Hubbell Inc.
- Pass and Seymour, Inc.
- Slater Electric, Inc.
- Square D Co.
- Hunt Electronics
- Lutron
- Intermatic
- Paragon
- Unitil

FABRICATED DEVICES

Provide factory-fabricated wiring devices, in type and electrical rating for the service required.

Receptacles: Comply with NEMA Stds. Pub. No. WD1 and as follows:

General-Duty Duplex: Provide duplex general-duty type, spec. grade, receptacles, 2-pole, 3-wire grounding, with green hexagonal equipment ground screw, ground terminals and poles internally connected to mounting yoke, 15-ampere, 125-volts, with metal plaster ears, screw terminal connectors, NEMA configuration 5-15R unless otherwise required.

Heavy-Duty Duplex: Provide duplex type, spec. grade, receptacles, 2-pole, 3-wire grounding, with green hexagonal equipment ground screw, 30-ampere, 125-volts, with metal plaster ears, screw terminal connectors, NEMA configuration L5-30R unless otherwise required.

Switches: Comply with NEMA Stds. Pub. No. WD1 and as follows:

Provide general-duty flush toggle switches, 20-ampere, 120/277 VAC, with mounting yoke insulated from mechanism, equipped with plaster ears, and side-wired screw terminals as follows:

Single pole switches	Double pole switches
Three Way switches	Four Way switches

Breakers: Breakers shall be compatible with existing panel circuits. All breakers necessary will be incidental to the Contract pay items.

WIRING DEVICE ACCESSORIES

Wall Plates: Provide single switch and duplex outlet wall plates for wiring devices, with ganging and cutouts as required, provide with metal screws for securing plates to devices, screw heads colored to match finish of plate, and wall plates possessing the following additional construction features:

Material and Finish: 0.04 inch thick, satin finished stainless steel.

INSTALLATION OF WIRING DEVICES

Install wiring devices where required, in accordance with manufacturer's written instructions, applicable requirements of NEC and National Electrical Contractors Association's "Standard of Installation", and in accordance with recognized industry practices to ensure that products serve intended function.

Delay installation of devices until wiring is completed.

Install receptacles and switches only in electrical boxes that are clean and free from excess building materials, debris, etc.

PROTECTION OF WALL PLATES AND RECEPTACLES

Upon installation of wall plates and receptacles, Contractor shall use caution regarding the use of convenience outlets. At time of completion, replace those items which have been damaged, including those burned and scored by faulty plugs.

TESTING

Test wiring devices to ensure electrical continuity of grounding connections, and after energizing circuitry, to demonstrate compliance with requirements.

655.07 Grounding

SUMMARY

Furnish labor and material to provide grounding facilities for the entire electrical installation as required by all inspecting and jurisdictional authorities as herein specified. The following are included, but not limited to, as items requiring grounding:

- Electrical service neutral conductor.
- Neutral conductor of all transformer secondaries.
- Conduits, boxes and other conductor enclosures. Neutral or identified conductor of interior wiring system.
- Distribution panels, power and lighting panel boards.
- Non-current - carrying parts of fixed equipment, such as transformers, motors, starters, control cabinets, disconnects, lighting fixtures, stand-by generator, etc.
- Metallic cabinets and auxiliary systems cabinets.

EQUIPMENT

Furnish and install all boxes and/or access plates required for installation and inspection of grounding connections to cold water piping system or other made electrodes.

Provide brass identifying tags on all ground clamps.

INSTALLATION

Ground connections made to metallic cold water piping system at such locations as will be readily available for inspection. Provide jumper connections around all meters and shut off devices.

Where cold water piping is not available for ground connections, use other available or made electrodes as described in NEC Sections 250-81 or 250-83.

Conduit Grounding: All grounding bushings within all enclosures, including equipment enclosures, shall be wired together and connected internally to the enclosure grounding lug or grounding bus with bare copper conductor. Grounding conductors sized in accordance with NEC shall be used with all grounding bushings.

Equipment Grounding: All electrical equipment shall be grounded. Most other equipment will be furnished with grounding pads or grounding lugs. All ground connections shall be cleaned immediately prior to connection. The Contractor shall provide all grounding material required but not furnished with the equipment.

No grounding conductor shall be smaller than 12 AWG wire unless it is a part of an acceptable cable assembly.

655.08 Scope of Work/Item Description/Measurement and Payment

INSTALLATION OF ORT CONTROL CABINET

RELATED DOCUMENTS

Examine Drawings, Contract Conditions and all other Sections of the Specifications for requirements which affect work of this Section whether or not such work is specifically mentioned in this Section.

Coordinate work with that of all other trades affecting, or affected by work of this Section. Cooperate with such trades to assure the steady progress of all Project work.

DESCRIPTION

The purpose of this section is to provide information related to the work required to prepare the location of the lane controller cabinets as well as mount and install the ORT control cabinets. A concrete pad shall be installed as designed in the Plan drawings. Mounting cleats which are supplied by the SI shall be attached to the tunnel wall. Conduit, wires and cables shall be pulled to the ORT Control and looped. Once the ORT Control is placed and connections to the cabinet have been made the SI will terminate all wiring. The Contractor may be required to be present when the SI terminates to perform any additional work necessary. All work shall be coordinated with the Resident and SI.

INSTALLATION

The Contractor shall install and connect all conduit, wireway, power and data wires associated with the proposed ORT Control Cabinets. The SI shall terminate all toll equipment wiring in the ORT Control Cabinets. The Contractor shall install a concrete pad as detailed in the Plan drawings for each of the ORT Control cabinets to be mounted on.

The Contractor will be required to:

a. Install concrete pads as detailed in the Plan drawings, including reinforcement.

b. Install SI provided mounting cleats to tunnel wall and cabinets in accordance with manufacturer and SI standards.

c. Terminate clean power into three quadplex receptacles or provide alternate termination as shown on the Plans or directed by the Resident and SI. Power termination requirements to be confirmed in the field. The quadplex receptacles shall be white with stainless steel cover.

d. Pull data/power from lane equipment into the ORT Control Cabinets with a 36 inch service loop for all data lines (including 120 volt data);

e. Label each wire coming into the ORT Control Cabinets with numbered tags per wiring schedules and subject to approval as directed by the Resident and SI at the start of the project. Tags shall be neat, legible, waterproof, and approved by the SI/ the Resident.

f. Cap or otherwise prep the ends of all conduit and wiring associated with the proposed lane controller such that these components will be sealed from any environmental impacts prior to installation of the ORT Control Cabinet.

Basis of Payment

Measurement and payment for mounting and installation work associated with the ORT Control cabinets as shown on the Plan drawings and described herein will be per each item. Installation of receptacles and completion of all conduits and wiring associated with the cabinet shall be incidental.

Pulling power wires and data cables as required for the new ORT Control Cabinet and associated equipment as shown on the Plan drawings will be incidental. All new conduit, wireway, wires and data cables installed will be paid under its appropriate pay item.

Payment will be made under:

Pay Item		Pay Unit
655.01	Installation of ORT Lane Controller Cabinet	Each

INSTALLATION OF CASH LANE CONTROLLER CABINET

RELATED DOCUMENTS

A. Examine Drawings, Contract Conditions all other Sections of the Specifications for requirements which affect work of this Section whether or not such work is specifically mentioned in this Section.
B. Coordinate work with that of all other trades affecting, or affected by work of this Section. Cooperate with such trades to assure the steady progress of all Project work.

DESCRIPTION

The purpose of this section is to provide information related to the work required to prepare the location for the proposed lane controller (LC) cabinet to be installed by the Contractor. This section provides information on how the work by the Contractor will take the LC into consideration. All work shall be coordinated with the Resident and SI. This task includes removing the existing Lane Controller (LC) and the associated conduit and/or wireway, so as to install the conduits and wiring associated with the LC. If deemed appropriate by the Resident and SI, the existing LC quadplex can be reused. Note the SI may request the quadplex be removed to allow direct clean power connection to breakers within the proposed LC installed by the SI.

Submittals

Five days prior to the removal of the LC cabinet, the Contractor will be required to submit three copies of a neat line sketch of the proposed lane controller cabinet location detailing existing and proposed conduit/wireway runs (calling out conduit/wireway sizes and the specific cables/wires in each conduit/wireway) to the LC, AVI, Sensor loops, TCP, DVAS, MLT, RP, Proximity Reader and COS (As shown in the Plans). Included with this sketch will be the Plaza Work checklist from Appendix E that the Contractor must complete, indicating what cables will be routed into the new LC, how much slack is present in each of these existing cables, whether or not existing cables will have to be removed and re-installed (with longer run) in order to reach the new LC, and any extra work that is required. The Resident/SI will have three working days to review the submittal. Work done for this submittal will be incidental to mobilization. After this submittal the exact location of the LC installation will be confirmed by the Resident and the SI. Also to be confirmed by the Resident and the SI will be the number, size and location of the conduits entering the LC cabinet, conduit/wireway layouts in pit and entering the pit, canopy and booth, islands, under slabs, etc.

Installation

The Contractor shall install all conduit/wireway and power, and data wires, associated with the proposed LC within the LC cabinet so as to be able to connect existing and proposed peripherals to the new LC at the time of installation by the SI.

The Contractor will be required to:

g. terminate clean and dirty power into the LC cabinet or provide alternate termination as directed by the Resident and the SI. Power termination requirements to be confirmed in the field;
h. pull data/power from lane equipment into the LC cabinet with a 36 inch service loop for all data lines (including 120 volt data);
i. label each wire coming into the LC cabinet with numbered tags as directed by the Resident and the SI at the start of the project. Tags shall be neat, legible, waterproof, and approved by the SI/ Resident.

Note: Existing power wires to proposed lane controller to be spliced if necessary following NEC regulations. If any other existing cable will not reach the proposed LC, a new "Home Run" from the existing equipment to the LC will need to be pulled.

Prior to the start of work on the existing toll equipment or power and comms associated with the toll equipment, the Contractor shall coordinate with the Authority and the SI for proper shut down of toll equipment. The SI will shut down the lane equipment prior to work, including LC and AVI systems. The Contractor shall not commence with work associated with toll system components without the Authority's authorization after proper shutdown of equipment by the SI. Upon authorization, the Contractor will disconnect all power connections to the existing LC and peripheral equipment as specified in the Plans. The SI will then disconnect all communication cables to the existing LC and peripheral equipment as specified in the Plans. The Contractor shall coordinate activities with the SI. The SI shall remove equipment within the existing LC cabinet prior to Contractor removal of the existing LC Cabinet. The Contractor will then pull all power and communication cables out, remove existing LC cabinet, and remove existing conduit as necessary install new conduit as necessary to the proposed LC location, and pull all existing cables to the proposed LC location including the existing AVI communications line (if existing length is adequate, otherwise replace per these Specifications). The Contractor will terminate clean and dirty power into the LC cabinet. The SI will install all electronics in the cabinet and terminate all communications cables to the electronics for testing. After the Contractor completes all conduit and power connections, and pulls all existing and proposed communication cables to the new LC cabinet and associated equipment as specified in the Plans, the Contractor is finished with the installation.

Measurement and payment for preparation work associated with the LC cabinet as shown on the Plan drawings and described herein will be per each item. Removal of the existing LC cabinet, installation of receptacles (if applicable), completion of all conduits and wiring associated with the cabinet shall be incidental.

Pulling of wires out of the existing LC, VES and COS cabinets, and re-pulling power wires and data cables as required for the new LC and associated equipment as shown on the Plans will also be incidental. Any wire / cable that has to be pulled completely back to the existing lane equipment and replaced (due to shortness of slack in existing cable) will be considered Contract work, and will be paid under appropriate pay items. All new conduit/wireway installed will be paid under its appropriate pay item.

Payment will be made under:

Pay Item		Pay Unit
655.012	Installation of Cash Lane Controller Cabinet	Each

DVAS MOUNT INSTALLATION

The Contractor shall mount a Pelco EM2200 hook to the underside of the space frame to accept a Costar CHG3000S enclosure for the DVAS camera. The Pelco hook shall be supplied by the SI. The Contractor will be responsible for mounting the hook. The mounting hardware shall be mounted directly to the space frame. Final location shall be approved by the Authority. Any additional hardware required will be incidental to the pay item.

Basis of Payment

Measurement and payment for work the DVAS mount installation as shown on the Plan drawings and described herein will be per each item.

Payment will be made under:

Pay Item		Pay Unit
655.02	DVAS Mount Installation	Each

VCARS MOUNT INSTALLATION

The Contractor shall mount a three inch outside diameter round schedule 40 steel pipe using the long-tangent U-bolts supplied by the SI in the VCARS mounting kit. The Contractor must leave three feet of clearance between the bottom of the space frame and the top of the mounting pipe for the VCARS unit.

Basis of Payment

Measurement and payment for work the VCARS mount installation as shown on the Plan drawings and described herein will be per each item. All materials not provided in the mounting kit, labor and hardware are incidental to the pay item.

Payment will be made under:

Pay Item		Pay Unit
655.03	VCARS Mount Installation	Each

INSTALLATION OF SENSOR LOOPS

The Contractor shall sawcut concrete pavement slab as directed by the Resident and according to Plans and detailed manufacturer's instructions provided prior to installation. Given the proprietary nature of the loop installation requirements, the manufacturer's instructions will only be provided to the awarded Contractor. Loop installation will involve multiple sawcuts within the limits indicated on the Plans and per manufacturer provided templates. Templates for loop cutting outlines shall be provided by the SI. No loop installation activities shall be done without the SI representative on-site. The SI will also provide the required materials for sealing the loops including but not limited to the required Loctite epoxy, pump and related injection equipment prior to the Contractor placing sensor loops. The Contractor shall be responsible for obtaining and operation of required sawcutting equipment.

NOTE: All dust must be contained so that no silica reaches Authority employees or patrons. This may be accomplished by using wet saws, advanced air filter systems or by building an enclosure around the work area. The Contractor shall provide the Resident a 5-day notice prior to any sawcutting activities.

Basis of Payment

Payment to be made as lump sum for all associated Sensor loops shown on Plan drawings. Sawcutting of pavement, installation of epoxy and loops will be incidental to item.

Payment will be made under:

Pay Item		Pay Unit
655.04	Installation of Sensor Loops	Lump Sum

INSTALLATION OF AVI ANTENNAS

The Contractor shall pick up AVI antennas and mounting equipment at the Maine Turnpike headquarters or a nearby maintenance yard as coordinated by the Resident. The Contractor shall install antennas and mounts in accordance with the manufacturer's instructions. Antenna wires shall be installed and looped, the AVI equipment vendor will arrive to terminate equipment wiring while the Contractor is onsite. If the vendor requires additional work during termination and testing the Contractor must be present to assist.

Basis of Payment

Measurement and payment for work associated with the installation of AVI antennas as shown on the Plan drawings and described herein will be per each item. The Contractor will not pay for the purchase of antennas or the AVI equipment vendor's presence to terminate and tune equipment.

Payment will be made under:

Pay Item		Pay Unit
655.05	Installation of AVI Antennas	Each

INSTALLATION OF AVI READERS

The Contractor shall pick up AVI readers at the Maine Turnpike headquarters or a nearby maintenance facility as coordinated by the Resident. The Contractor shall install readers in NEMA 4X cabinets mounted on space frame pedestals as shown on the Plans. AVI readers shall be installed in accordance with the manufacturer's instructions with oversight by the SI onsite as needed (to be determined by Resident). Reader wires shall be installed and looped. The vendor will arrive to terminate wiring while the Contractor is onsite. If the AVI equipment vendor requires additional civil or electrical work during termination and testing the Contractor must be present to assist.

Basis of Payment

Measurement and payment for work associated with the installation of AVI readers as shown on the Plan drawings and described herein will be per each item. The Contractor will not pay for the purchase of readers or the AVI equipment vendor's presence to terminate wiring and tune equipment.

Payment will be made under:

Pay Item		Pay Unit
655.06	Installation of AVI Readers	Each

TRAFFIC CONTROL PEDESTAL (TCP) PREPARATION WORK

Measurement and payment for preparation work for the TCP as shown on the Plan drawings and described herein will be per each item. Note the procurement and installation of the TCP will be by the SI at a point beyond the completion of this Contract. Preparation work shall include drilling and installing threaded rods with adhesive and protection of associated wiring for the TCP in advance of installation of the TCP by the SI. The Contractor shall provide the following items or approved equals for the TCP anchorage system:

- 4 each - 1/2" x 6-1/2" Hilti HAS 304SS threaded rods, nuts (double nut), flat and lock washers.
- 4 each - Hilti HVU adhesive capsules.
- 4 each – 1/2" SS nuts and fender washers for shimming and leveling the pedestal base.

Steps involved for installation of threaded rods are as follows:

1. Using the Pedestal Base detail in Appendix F as a template, layout and drill four 9/16” holes for the 1/2” threaded rods.
2. Using a compressor and wire brush blow gun, clean out the anchor holes.
3. Use the shop vacuum to clean up all of the concrete dust and metal shavings.
4. For all concrete island installations, install the four ½ inch Hilti HAS 304SS threaded rods (using HVU adhesive capsules according to the manufacturer’s instructions).

Final location of TCP and alignment of threaded rod pattern layout shall be confirmed by the Resident and the SI prior to threaded rod installation.

Payment will be made under:

Pay Item		Pay Unit
655.07	Traffic Control Pedestal Preparation Work	Each

ARMORED CABLE

This task shall include the providing and installation of armored cable wire, as described herein for clean and dirty power wiring, and other locations called for in the Plans and Specifications.

Wire: as previously specified in the technical provisions of wires & conductors.

Armored cable is intended to be used in above the drop ceiling only.

Measurement and payment for the installation of armored cable wire as described herein will be per foot, to the nearest 10 foot interval per run. It shall include the furnishing, installation, routing, termination, splices and connection of the wire per the wiring schedule.

Payment will be made under:

Pay Item		Pay Unit
655.09	Armor Cable – 10/3	Linear Foot

AWG WIRE

This task shall include the providing and installation of the AWG wire, as described herein for clean and dirty power wiring, for grounding wires (where applicable) and other locations called for in the Plans and Specifications. All wire installed in conduit must be burial grade, suitable for wet locations.

Basis of Payment

Measurement and payment for the installation of the AWG wire as described herein will be per foot, to the nearest 10 foot interval per run. It shall include the furnishing, installation, routing, termination, splices and connection of the wire per the wiring schedule.

Payment will be made under:

Pay Item		Pay Unit
655.08	#2/0 Wire for UPS re-wiring	Linear Foot
655.10	#4 AWG Wire	Linear Foot
655.101	#6 AWG Wire	Linear Foot
655.11	#10 AWG Wire	Linear Foot
655.12	#12 AWG Wire	Linear Foot
655.13	#14 AWG Wire	Linear Foot

4 pr/24 (CATEGORY 5e) CABLE

This task shall include the providing and installation of the Category 5e cable shown on the Plan drawings and described herein.

Cable: 4 pair, 24 AWG, Category 5e, twisted pair cable. Conductor material shall be bare copper, inner jacket material shall be PVC, cable shall be insulated and unshielded. Must be direct burial type suited for harsh conditions 4pr/24 category 5e cable, as approved.

Basis of Payment

Measurement and payment for the installation of the 4pr/24 category 5e cable will be by linear foot to the nearest 10 ft. interval. It shall include the furnishing, installation and routing of the cable per the wiring schedule.

Payment will be made under:

Pay Item		Pay Unit
655.14	4pr/24 (Category 5e) Cable	Linear Foot

LMR 400 CABLE

This task shall include the providing and installation of the LMR 400 cable shown on the Plan drawings and described herein.

Cable: LMR 400 cable, as approved.

Basis of Payment

Measurement and payment for the installation of the LMR 400 cable will be by linear foot to the nearest 10 ft. interval. It shall include the furnishing, installation and routing of the cable per the wiring schedule.

Payment will be made under:

Pay Item		Pay Unit
655.15	LMR 400 Cable	Linear Foot

FIBER OPTIC CABLE

This task shall include the providing and installation of 62.5/125 micron multimode fiber optic cable as shown on the Plan drawings and described herein. The following Specifications for the selection and installation of fiber-optic cable and associated hardware are intended to ensure a reliable and consistent fiber optic media infrastructure for the MTA. All fiber optic cable termination and the fiber optic patch panels will be provided by the Contractor

Cable: 6-Fiber multi-mode multi-mode Fi, 100 mbs, 62.5/125 Microns, Indoor/Outdoor Riser Rater, ST (Male) Connection, as approved

Specifications: Fiber installed must meet or exceed the following Specifications:

- Multimode fiber installed cable shall be 62.5/125micron core/cladding, enhanced grade, multimode, and graded index glass fiber. All materials in the cable shall be dielectric.

- Installed fiber must meet or exceed the following performance Specifications:

Wavelength (nm)	Max. Attn.(dB/Km)	Min. Bandwidth (Mhz*Km)
850	3.0	200
1,300	0.9	500

- Plenum rated cable shall be used for all interior installations. Plenum rated cable shall be:

  - Tight buffered 900 um
  - Mechanical strippable Teflon (for plenum applications)
  - EIA/TIA -598 color coding for fiber optic cable
  - Aramid yarn strength member
  - Capable of supporting a short-term tensile load of 400 lb. without stretching.
  - Capable of bend radii as small as 20 x outside cable diameter (under installation load) and 10 x outside cable diameter (long term load)

- Capable of a minimum crush resistance of 850 lb./in.

- Corning and Berk-Tech fiber are currently recommended for installation. Cable from other manufacturers will be considered. All cable installed must be cleared by MTA prior to installation.

All cable is to be fully supported throughout its entire run.

At no time shall more than 400 pounds of tension be placed on any fiber cable while it is being pulled through tray or conduit. It is preferred that all fiber cable be pulled with hand power only. If power winches or mechanical advantage devices are used to pull cable, a tensionometer must be used to insure that maximum tension is not exceeded. Alternatively, a "mechanical fuse" rated at 350 pounds may be included in the linkage. Torsion shall be avoided by the use of a swivel at the cable end. While under tension, a minimum bend radius of 20 times the outside cable diameter will be maintained through the use of pulleys and sheaves where required. After pulling, no bend may have a radius, at rest, of less than 10 times the outside cable diameter.

Each cable is to be permanently labeled at each end with a unique cable number. In addition, labels shall be affixed to the cable at every transition of a vault, hand hole, riser closet, or major pull box.

Each fiber optic strand shall be labeled with a unique identifier at the ST coupler.

Fiber ends are to be terminated in ST-type connectors. No splices will be permitted. The cable shall be continuous run from LC to server room fiber switch location.

At each end of the cable, sufficient slack (15 - 30') shall be left to facilitate reasonable future relocation of the fiber switch or LC. Slack shall be mounted on walls or upper ladder racks.

Testing: Contractor shall test all long reels with an OTDR for length and transmission anomalies while on the reel prior to installation. It is suggested that each individual fiber in a cable regardless of length be tested with an OTDR for length and transmission anomalies while on the reel before installation.

All multimode fiber strands shall be tested end-to-end for bi-directional attenuation, 850 nm/1300 nm for multimode. Tests should be conducted in compliance with EIA/TIA-526-14 or OFSTP 14, Method B, according to the manufacturer’s instructions for the test set being utilized.

Tests must ensure that the measured link loss for each strand does not exceed the “worst case” allowable loss defined as the sum of the connector loss (based on the number of mated connector pairs at the EIA/TIA-568 B maximum allowable loss of 0.75 dB per mated pair) and the optical loss (based on the performance standard above, 2.1.1 and 2.2.1).

After termination, each fiber shall be tested with an ODTR for length, transmission anomalies, and end-to-end attenuation. Results are to be recorded and supplied to MTA in the form of hard-copy printouts or photographs of screen traces.

After termination each terminated fiber is to be tested for end-to-end loss with a power meter/light source. As above, results are to be recorded and supplied to MTA.

The Contractor shall review all end faces of field terminated connectors with a fiber inspection scope following the final polish. Connector end faces with hackles, scratches, cracks, chips and or surface pitting shall be rejected and repolished or replaced if repolishing will not remove the end face surface defects. The recommended minimum viewing magnifications for connector ends are 100X for multimode fiber and 200X for single mode fiber.

Basis of Payment

Measurement and payment for the installation of the Fiber Optic cable will be by linear foot to the nearest 10 ft. interval. It shall include the furnishing, installation, termination and routing of the cable per the wiring schedule.

Payment will be made under:

Pay Item		Pay Unit
655.16	Fiber Optic Cable – 6 Fiber	Linear Foot

IVIS HOMERUN LOOP CABLE (IMSA 50-2 #16)

This task shall include the providing and installation of the IVIS homerun loop cable (IMSA 50-2 #16) shown on the Plan drawings and described herein.

Cable: IMSA 50-2 #16 cable loop detector wire shall be as follows:

- Conductors: Solid or stranded tin copper
- Insulation: Polyethylene
- Conductor Configuration: Twisted pair
- Shield: Aluminum/Mylar tape
- Outer Jacket: Low-density polyethylene

Cable shall have two conductors, #16 AWG, 19 strand. Cable must be direct burial grade suitable for installation in the tunnel, beneath the roadway, within the barrier and any other locations shown on the Plan or described within the design documents. All loop sensor homerun cables shall have tape with length markings.

Basis of Payment

Measurement and payment for the installation of the IMSA 50-2 #16 cable will be by linear foot to the nearest 10 ft. interval. It shall include the furnishing, installation and routing of the cable per the wiring schedule.

Payment will be made under:

Pay Item		Pay Unit
655.17	IVIS Homerun Loop Cable (IMSA 50-2 #16)	Linear Foot

HALF DIAMOND LOOP WIRE (#16 XHHW OR XLP STRANDED WIRE)

This task shall include providing and installation of the half diamond loop wire, as called for in the Plans and Specifications. Half diamond loop wire shall be hand wound and placed with 4 turns of #16 XHHW or XLP stranded wire. The tail loop lead shall be twisted similar to the provided IVIS sensor loops. Half diamond sensors are not provided by the SI as is the case for the preformed full loop sensor.

Basis of Payment

Measurement and payment for the installation of the half diamond loop wire as described herein will be per foot, to the nearest 10 foot interval per run. It shall include the furnishing, installation, routing, termination, splices and connection of the wire per the wiring schedule.

Payment will be made under:

Pay Item		Pay Unit
655.18	Half Diamond Loop Wire (#16 XHHW or XLP Stranded Wire)	Linear Foot

PVC CONDUIT

This task shall include providing and the installation of PVC Conduit as shown on the Plan drawings and described herein. All conduit shall be installed per NEC specification. Connections to specialized fittings are to be compatible with adjoining conduit.

Joints shall be made in accordance with ASTM D 2855. Solvent cement shall meet the requirements of ASTM D 2564 with particular attention to matching the viscosity to the conduit size.

Joint adhesives shall be in accordance with ASTM D2517.

All conduit runs shall be watertight. Slope conduit to drain into junction boxes.

All empty conduits shall have a labeled pull string. Pull strings shall have length markings and should be used for long conduits over 50 feet or for all underground installations. Clean, plug and seal conduit ends after installation.

Basis of Payment

Measurement and payment for installing PVC Conduit as shown on the Plan drawings and described herein will be per linear foot of each type of underground or exposed conduit actually furnished, installed, and accepted at the Contract price per linear foot. It shall include the furnishing, installing, supporting and connection of the conduit and all various hardware necessary for the installation. This price shall include the cost of hand digging, trenching, or plowing; furnishing and installing the conduit; furnishing special backfilling materials, pull string, fittings, groundings and bonding; test cleaning interiors of conduits and all materials, labor, equipment and incidentals necessary to complete the work.

Payment will be made under:

Pay Item		Pay Unit
655.200	1- 1/2” Schedule 40 PVC Conduit	Linear Foot
655.201	3” Schedule 40 PVC Conduit	Linear Foot
655.202	4” Schedule 40 PVC Conduit	Linear Foot
655.2021	1” Schedule 80 PVC Conduit	Linear Foot
655.203	1-1/2” Schedule 80 PVC Conduit	Linear Foot
655.2031	2” Schedule 80 PVC Conduit	Linear Foot
655.204	3” Schedule 80 PVC Conduit	Linear Foot
655.205	4” Schedule 80 PVC Conduit	Linear Foot

GALVANIZED RIGID METAL CONDUIT (RMC)

This task shall include providing and the installation of Galvanized RMC as shown on the Plan drawings and described herein. All fittings shall be threaded, or approved compression type (approved by the engineer and compatible with the conduit), so as to be waterproof. Conduit shall be installed and grounded per NEC regulations. All supports shall be hot dipped galvanized or stainless steel (approved by the engineer and compatible with the conduit).

Basis of Payment

Measurement and payment for furnishing and installing the Galvanized RMC as shown on the plan drawings, where necessary, and described herein will be per linear foot actually furnished, installed, and accepted at the Contract price per linear foot. This price shall include the cost of: furnishing and installing the conduit; pull string, fittings, groundings and bonding; test cleaning interiors of conduits and all materials, labor, equipment and incidentals necessary to complete the work.

Payment will be made under:

Pay Item		Pay Unit
655.206	1” Galvanized Rigid Metal Conduit	Linear Foot
655.2061	3/4” Galvanized Rigid Metal Conduit	Linear Foot
655.207	1-1/2” Galvanized Rigid Metal Conduit	Linear Foot
655.208	3” Galvanized Rigid Metal Conduit	Linear Foot

LIQUID TIGHT METALLIC FLEXIBLE CONDUIT

This task shall include providing and the installation of Liquid Tight Metallic Flexible Conduit as shown on the Plan drawings and described herein. All conduit shall be watertight with flexible PVC coating over galvanized steel flex tubing. Conduit shall be installed and grounded per NEC regulations. All supports for shall be hot dipped galvanized or stainless steel. Connections shall be specialized fittings to be compatible with adjoining conduit and watertight.

Basis of Payment

Measurement and payment for installing the Liquid Tight Metallic Flexible Conduit as shown on the Plan drawings and described herein will be per linear foot actually furnished, installed, and accepted at the Contract price per linear foot. This price shall include the cost of: furnishing and installing the conduit; pull string, fittings, groundings and bonding; test cleaning interiors of conduits and all materials, labor, equipment and incidentals necessary to complete the work.

Payment will be made under:

Pay Item		Pay Unit
655.209	1/2” Liquid Tight Metallic Flexible Conduit	Linear Foot
655.210	3/4” Liquid Tight Metallic Flexible Conduit	Linear Foot
655.2101	1-1/2” Liquid Tight Metallic Flexible Conduit	Linear Foot

ELECTRICAL METALLIC TUBING (EMT) CONDUIT

This task shall include the installation of the EMT as shown on the Plan drawings and described herein. All fittings shall be an approved compression type (approved by the engineer and compatible with the conduit). Conduit shall be installed and grounded per NEC regulations. All supports for conduit shall be galvanized steel (with similar or better galvanizing than the tubing). Fittings are to be joined using couplings as recommended by the manufacturer.

Basis of Payment

Measurement and payment for installing the EMT as shown on the Plan drawings and described herein will be per foot actually furnished, installed, and accepted at the Contract price per linear foot. This price shall include the cost of: furnishing and installing the conduit; pull

string, fittings, groundings and bonding; test cleaning interiors of conduits and all materials, labor, equipment and incidentals necessary to complete the work.

Payment will be made under:

Pay Item		Pay Unit
655.211	1-1/2” Electrical Metallic Tubing Conduit	Linear Foot
655.212	2” Electrical Metallic Tubing Conduit	Linear Foot
655.213	3” Electrical Metallic Tubing Conduit	Linear Foot
655.214	4” Electrical Metallic Tubing Conduit	Linear Foot
655.215	3/4” Electrical Metallic Tubing Conduit	Linear Foot

INSTALLATION OF PULL BOXES

This task shall include providing and installing:

- The type A pull box for interior, dry locations as shown on the Plan drawings and detailed herein, or where used elsewhere.
    - Materials: 4” x 4” x 2” steel; equal to Appleton 4SD1 or better.

- The type C pull box as shown on the Plan drawings and detailed herein. The C pull box shall be installed in booth pits, or building utility pits, or where PVC conduit is used.
    - Materials: 18” x 18” x 6” metal, NEMA 3R; Painted steel.

- The type D pull box as shown on the Plan drawings and detailed herein, or where used elsewhere.
    - Materials: 6” x 6” x 4” NEMA 4X.

- The type E pull box as shown on the Plan drawings and detailed herein. The E pull box shall be installed in booths/buildings in dry locations to pull communications cables, or shown elsewhere on the Plans, or where needed to complete the work.
    - Materials: 6” x 6” x 6” steel, indoor rated; equal to Hoffman A-606CH or better.

- The type F pull box as shown on the Plan drawings and detailed herein. The F pull box shall be installed in booth pits, or building utility pits, or where this size is to be used in a wet location or exterior location.
    - Materials: 4” x 4” x 4” plastic, medium duty; equal to or better than Appleton JIC-2

If equipment is to be installed at a later date insure adequate slack in the junction box for termination and additional 4 inch for possible re-termination. For pass through junction boxes no slack is required. For specific equipment the following guidelines apply:

- Sensor Loops: A single slack loop of 12" – 24" for convenience of splicing.
- DVAS: Slack loop to allow for distance to mounting location of camera plus an additional 3 feet.
- LC: 4 feet of slack at LC mounting location.

Basis of Payment

Measurement and payment for installing the pull boxes as shown on the Plan drawings and described herein will be per each item. It shall include the furnishing, installation, mounting of the box, and the drilling of holes into the box for conduits.

Payment will be made under:

Pay Item		Pay Unit
655.221	Type A Pull Box Inside	Each
655.222	Type C Pull Box In Tunnel	Each
655.223	Type D Pull Box Outdoor Canopy	Each
655.224	Type E Pull Box Steel in Booth	Each
655.225	Type F Pull Box Outside	Each

GALVANIZED STEEL JUNCTION BOX

This task shall include providing and installing galvanized steel watertight junction boxes measuring 12" x 12" x 6" or 18" x 18" x 6" to provide an access point from rigid metal conduit to tolling equipment mounted to the space frame as shown in the Plan drawings. Junction boxes must be approved by Resident.

Basis of Payment

Measurement and payment for installing the junction boxes as shown on the Plan drawings and described herein will be per each item. It shall include the furnishing, installation, mounting of the box, and the drilling of holes into the box for conduits.

Payment will be made under:

Pay Item		Pay Unit
655.30	12” x 12” x 6” Galvanized Junction Box	Each
655.31	18” x 18” x 6” Galvanized Junction Box	Each

24” x 24” x 12” JUNCTION BOX

This task shall include providing and installing 24” x 24” x 12” watertight junction boxes to be cast-in-place into the barrier as shown in the Plan drawings. Junction box shall be nonmetallic or galvanized and able to be placed in concrete. Access must be provided through the top cover which shall be flush with the top of barrier after placement. Junction boxes must be approved by Resident.

Basis of Payment

Measurement and payment for installing the junction boxes as shown on the Plan drawings and described herein will be per each item. It shall include the furnishing, installation, mounting of the box, and the drilling of holes into the box for conduits.

Payment will be made under:

Pay Item		Pay Unit
655.40	24” x 24” x 12” Junction Box	Each

36” x 30” x 20” NEMA 4X CABINET

Provide and install NEMA 4X stainless steel equipment cabinets as designated on the Plan drawings to house the AVI Readers. Cabinets shall provide equipment mounting rails as appropriate and shall provide sufficient space for the enclosed equipment. Doors for the equipment cabinets shall be secured with standard interchangeable cylinder locks that match the existing (BEST) system presently in use by MTA. A closed cell neoprene gasket shall be utilized to prevent water entry at the door. A handle controlled latching system shall be included to simplify access to the cabinets. The door shall be able to be opened and closed without need for separate latching hardware. A 120-Volt single-phase three-wire circuit shall be furnished and installed for clean power to a quadplex receptacle (Type 5-15R) that shall be provided within each cabinet as shown on the Plans. The quadplex receptacles shall be orange with stainless steel cover.

AVI Reader cabinets shall be NEMA-4X with minimum dimensions of:

- Height 36”
- Width 30”
- Depth 20”

AVI Reader cabinets shall be fabricated with internal pieces of aluminum angle that is positioned to support the reader and provide 19 inch wide rack mounting with minimum depth of 15 inches. The AVI Reader and associated contiguous RF rack height is 21.05 inches. Mounting shall be configured per RS-310 (EIA rack spacing).

Basis of Payment

Measurement and payment for installing the NEMA 4X Cabinets as shown on the Plan drawings and described herein will be per each item. It shall include the furnishing, installation, mounting of the box, and the drilling of holes into the box for conduits. Installation of receptacles and completion of all conduits and wiring associated with the cabinet shall be incidental.

Payment will be made under:

Pay Item		Pay Unit
655.42	36” x 30” x 20” NEMA 4X Cabinet	Each

60 AMP PANELBOARD CABINET

Provide and install 60 amp panelboard cabinet as designated on the Plan drawings. Panelboard cabinet shall be of the dead-front, safety type with space for 24 single pole breakers. Cabinet shall be constructed of zinc coated sheet steel and shall conform to Underwriters Laboratories, Inc, Standard for Cabinet and Boxes.

Panelboard cabinet height shall not exceed 72 inch and shall be mounted so that the distance from the floor to center of the top circuit breaker will not exceed 6 feet. Cabinet shall be provided with trims having adjustable trim clamps. Trims, unless otherwise noted, shall be fitted with hinged doors.

Basis of Payment

Measurement and payment for installing the panelboard cabinet as shown on the Plan drawings and described herein will be per each item. It shall include the furnishing, installation, mounting of the cabinet, and the drilling of holes into the box for conduits.

Payment will be made under:

Pay Item		Pay Unit
655.43	60 AMP Panelboard Cabinet	Each

PLASTIC WIREWAY

This task shall include providing and the installation of plastic wireway in the tunnel as shown on the Plan drawings and/or described herein. Wireways shall be plastic NEMA 4R, and

shall be installed and grounded per NEC regulations. All supports for wireways shall be hot dipped galvanized or stainless steel.

Basis of Payment

Measurement and payment for installing the Plastic Wireways as shown on the Plan drawings and described herein will be per foot, to the nearest two foot increment above the final installed segment. It shall include the furnishing, installing, supporting and connection of the wireway and all misc. hardware necessary for the installation. It shall also include all end caps, covers, drilling of holes for conduits, fabrications for 90 degree bends, etc.

Payment will be made under:

Pay Item		Pay Unit
655.63	4-inch x 4-inch Plastic NEMA 4R Wireway	Linear Foot
655.64	6-inch x 6-inch Plastic NEMA4R Wireway	Linear Foot

REMOVAL OF EXISTING SELECT TOLL EQUIPMENT

The work shall include the removal of existing select toll equipment, defined as the cables/conduit related to removed equipment, existing island traffic light, light curtains, and overhead scanner. Work shall be coordinated with the SI who will be responsible for removing the existing VES cameras, VES lighting, mounting pole(s) and height detector. The removal of existing select toll equipment shall include removing all associated equipment, enclosures, associated pedestals, removing any grout bases, cutting anchor bolts flush with surface, and grouting over any holes or irregularities. It shall also include removal of all associated power and data cables from the existing LC, and the removal of dirty power to the VES lights after removal of VES equipment by the SI. All cables/wires/conduits abandoned from the removal of the existing select toll equipment shall be removed (unless housed in a conduit with other cables, making it impossible to remove without removing and replacing the cables/wires that are staying). Removing abandoned cables/wires/conduits shall be incidental. All existing select toll equipment removed shall be done with care, without harm to the equipment, and shall be stacked at the System Integrator Warehouse in Portland, ME.

Basis of Payment

Payment will be made under:

Pay Item		Pay Unit
655.71	Removal of Existing Select Toll Equipment	Lump Sum

KEY SWITCH

A key switch similar to existing key switches in use within the toll system shall be installed in line between clean power panel and power lead for each pair of VES cameras and each DVAS camera.

Basis of Payment

Work shall include furnishing all materials and hardware, and labor and equipment to install. All conduit and wires will be paid under separate pay items.

Payment will be made under:

Pay Item		Pay Unit
655.81	Key Switch	Each

RECEPTACLE BOXES

A convenience duplex outlet of NEMA type 5-15R may be required near new ORT lane controllers at a location to be determined by the Resident and the SI. Covers shall be stainless steel.

Basis of Payment

Work shall include furnishing all materials and hardware, and labor and equipment to install. All conduit and wires will be paid under separate pay items.

Payment will be made under:

Pay Item		Pay Unit
655.82	Duplex Receptacle	Each

RECEPTACLE BOXES

NEMA type L5-30R receptacles are required for the Cash Lanes where shown on the Plan drawings and installation instructions. Additional receptacle locations maybe determined by the Resident and SI. Covers shall be stainless steel.

Basis of Payment

Work shall include furnishing all materials and hardware, and labor and equipment to install. All conduit and wires will be paid under separate pay items.

Payment will be made under:

Pay Item		Pay Unit
655.83	NEMA L5-30R Receptacle	Each

SPECIAL PROVISION

SECTION 655

ELECTRICAL

(Concrete Encased Conduit)

655.71 Description

This work shall consist of encasing all conduit within the limits of the proposed conduit raceway section between the penetration from the tunnel to the structural slab infill opening. This work shall be completed in accordance with the Specifications, in reasonably close conformity with the lines and grades shown on the Plans or as approved by the Resident.

655.72 Materials

Concrete shall conform to Section 502, Structural Concrete, using 3/4 inch (19 mm) maximum size coarse aggregate (Class AAA).

PVC spacers shall be the interlocking type of strength and spacing to hold raceways straight and true with spacing between raceway outside diameter of no less than 3 inches, horizontal. Conduit must be laid out and spaced as depicted in the Plan drawings.

Duct-sealing compound shall be non-hardening, safe for contact with human skin, not deleterious to cable insulation, and workable at temperatures as low as 35°F. It shall be capable of withstanding temperature of 300°F without slump and of adhering to clean surfaces of plastic ducts, metallic conduits, conduit coatings, concrete, masonry, lead, cable sheaths, cable jackets, insulation materials, and common metals.

Waterproof membrane used for sealing duct bank penetration into tunnel shall be Tremco – Paraseal Membrane or an approved equal. A waterstop will be used in conjunction with the membrane and shall be Tremco Parastop or an approved equal. Both membrane and waterstop will be installed as per manufactures guidelines.

655.73 Execution

All raceways shall be securely fastened in place during construction and progress of the work. Concrete wall penetrations shall be plugged to prevent seepage of grout, water, or soil into the tunnel.

Trenches for conduit may be excavated manually or with mechanical trenching equipment where practical. Walls of trenches shall be essentially vertical so that a minimum of shoulder surface is disturbed. The Contractor shall ascertain the type of soil or rock to be excavated before bidding. All excavation shall be incidental to concrete encased conduit construction.

Existing concrete slab and tunnel wall openings shall be sawcut along the limits of concrete removal. Saw cutting for the tunnel and slab penetrations shall be considered incidental. Excavation limits of the concrete encased conduit will in accordance with the details shown on the Plans, unless otherwise approved by the Resident to provide access to the outer tunnel wall.

655.75 Basis of Payment

Measurement and payment for work associated with the concrete encased conduit as shown on the Plan drawings and described herein will be per cubic yard of concrete, based on the concrete encased conduit section dimensions detailed with no deduction for the space occupied by the conduit.

All work and materials necessary to install the concrete encased conduit will be incidental to the item, including excavation and saw cutting of existing concrete tunnel wall penetrations and the structural slab infill locations. All new conduit, wireway, wires and data cables installed will be paid under its appropriate pay item.

Payment will be made under:

Pay Item		Pay Unit
655.75	Concrete Encased Conduit	Cubic Yard

SPECIAL PROVISION

SECTION 655

ELECTRICAL

(Lightning Suppression System)

655.81 Description

This task shall include furnishing and installing the lightning protection system as described in the Plan drawings and described herein. Drawings and general provisions of this Contract, including General Provisions and Special Conditions, apply to work of this Section.

The task also includes obtaining a UL Master Label Certificate for the completed lightning protection as a UL Class I ordinary structure.

655.82 Submittals

1. Product Data: For air terminals and mounting accessories, grounding conductors, grounding electrodes, and ground connection equipment.
2. Shop Drawings: Detail lightning protection system, including air-terminal locations, conductor routing and connections, and bonding and grounding provisions. Include indications for use of raceway, data on how concealment requirements will be met, and calculations required by NFPA 780 for bonding of grounded and isolated metal bodies.
3. Qualifications: Qualification data for firms and persons specified in "Quality Assurance" Article to demonstrate their capabilities and experience. Include data on listing or certification by an NRTL or LPI.
4. Inspection: Field inspection reports indicating compliance with UL Master Label Certification.

655.83 Quality Assurance

1. Installer Qualifications: Engage an experienced installer who is an NRTL or who is certified by LPI as a Master Installer/Designer. Installer shall be UL listed as a lighting protection installer.
2. Listing and Labeling: All system components utilized in the installation shall comply with the Standard for Lightning Protection Components, UL 96A.

655.84 Coordination

Coordinate installation of lightning protection with installation of other tolling systems and components, including electrical wiring, supporting structures and materials, metal bodies requiring bonding to lightning protection components, and finishes.

Coordinate installation of air terminals attached to space frame with space frame manufacturer.

655.85 Products

Subject to compliance with requirements, provide products by one of the following manufacturers or approved equal:

1. Automatic Lightning Protection.
2. ERICO International Corporation.
3. Harger Lightning Protection, Inc.
4. Heary Bros. Lightning Protection Co. Inc.
5. Independent Protection Co.
6. Robbins Lightning Inc.
7. Thompson Lightning Protection, Inc.

Air Terminals shall be NFPA Class I, solid copper, 3/8" diameter, by 24" tall or 10" tall, as indicated on the Contract Drawings. Main roof conductors as down conductors shall be bare copper in sizes as indicated on the Contract Drawings. Grounding electrodes shall be copper-clad steel, 3/4" diameter by 10'-0" long.

655.86 Execution

All work shall conform to the requirements contained in the latest edition of UL 96A, Installation Requirements for Lightning Protection Systems, and in the latest edition of NFPA 780 Standard for the Installation of Lightning Protection Systems.

Install conductors with direct paths from air terminals to ground connections. Conductors shall be supported for their entire length without travel through free air. No bend of a conductor shall form an included angle of less than 90 degrees or have a radius of bend less than 8 inches.

Conductors shall not be directly attached to aluminum or galvanized steel. Do not combine materials that can form an electrolytic couple that will accelerate corrosion in the presence of moisture unless moisture is permanently excluded from junction of such materials.

Main conductors shall be fastened at intervals not exceeding 3 feet.

Down conductors shall be installed within Schedule 80 PVC conduit for physical protection.

Cable Connections: Use UL listed connectors or approved exothermic-welded connections for all conductor splices and grounding connections.

UL Inspection: Provide inspections as required to obtain a UL Master Label Certification for the system.

LPI Certification: Provide an inspection by an inspector certified by LPI to obtain an LPI certification.

655.87 Method of Measurement

Lightning Suppression Systems will be measured by each lightning suppression system shown on the plans.

655.88 Basis of Payment

The accepted quantity of Lightning Suppression System will be paid for at the Contract unit price per each which shall include excavation, air terminals, grounding rods, heavy duty ground test wells with cover, copper wire, associated hardware for a complete operational system, and system certification.

Payment will be made under:

Item	Description	Unit
655.80	Lightning Suppression System	Each

SPECIAL PROVISION

SECTION 655

ELECTRICAL

(Space Frame Lighting)

655.91 Description

This task shall include furnishing, mounting and wiring the space frame lighting and photocell sensors in accordance with these Specifications, and as shown on the Plans or as approved by the Resident.

655.92 Materials

Lighting fixtures shall be generation 3 LED ambient canopy light (CRO3) or similar containing a minimum of 128 LEDs with a drive current of 450 mA. Driver housing and light fixture casing shall be watertight. Operating temperatures shall be rated for -40^{0}F to +122^{0}F or better. Lighting fixtures shall be compatible with a universal voltage supply, 120-277 VAC, 50/60 Hz input. The lighting units shall come with a warranty and have an expected life minimum of 60,000 hours. Lighting fixtures shall be approved by the Resident. Each space frame lighting circuit shall be equipped with a photocell sensor.

Design of the mounting connections to attach the lighting fixtures to the space frame shall be provided by the supplier of the lighting fixtures once the details of the space frame are known and provided. The connections must be approved by a licensed engineer in the State of Maine prior to installation. Final locations and mountings to be approved by the Resident and the SI prior to installation of lighting and associated power conduits.

655.93 Execution

Lighting fixtures shall be installed as per; manufactures recommendations, NEC Standards, Plans, and Specifications.

The Contractor shall submit a proposed method of attaching all ancillary components to the space frame to the Resident for approval. The proposed attachment method shall not require drilling, welding or other attachment methods that will damage the space frame or its galvanized coating. Any areas of galvanized coating that are damaged by the Contractor during installation of ancillary components shall be repaired in accordance with ASTM A780.

655.94 Basis of Payment

The space frame lighting will be paid for at the Contract unit price of lump sum which shall include all associated hardware and mounting equipment required for a complete operational system. Conduit and wiring shall be paid for under the respective items.

Payment will be made under:

Pay Item		Pay Unit
655.90	Space Frame Lighting	Lump Sum

SPECIAL PROVISION

SECTION 655

ELECTRICAL

(LED Replacement Canopy Light Fixture)

655.01 Description

This work shall consist of furnishing and installing two new LED light fixtures (into existing light housings, both recessed and surfaced mounted) per lane in the existing toll plaza canopies in accordance with these Specifications, and as shown on the Plans or as approved by the Resident. All remaining light fixtures shall have the bulbs removed.

655.011 General

The Contractor shall submit shop drawing and an installation plan for installing new LED fixtures into the existing light fixture housings for approval.

The Contractor shall transport all working existing light fixtures and bulbs removed to the Maine Turnpike Sign Shop at Mile 58.3 Northbound.

655.02 Materials

Provide products produced by one of the following manufacturers or an approved equal:

- CREE Inc. – BetaLED 304 Series
- Dialight Corporation – STW Series

655.03 Method of Measurement

LED replacement light fixtures will be measured by each unit, installed, and accepted.

655.04 Basis of Payment

LED replacement light fixtures will be paid for at the Contract unit price each which payment shall be full compensation for the removal of the existing light fixtures, furnishing and installation of the new light fixture into the existing fixture housing, stacking, delivery, and all other materials, labor, tools, equipment and incidentals necessary to complete the work.

Payment will be made under:

Pay Item		Pay Unit
655.91	LED Replacement Canopy Light Fixture	Each

SPECIAL PROVISION

SECTION 656

TEMPORARY SOIL EROSION AND WATER POLLUTION CONTROL

Section 656 of the Standard Specifications and the General Provisions is deleted in its entirety and replaced with the following:

656.01 Description

This work shall consist of providing temporary erosion and water pollution control during construction in accordance with these Specifications, standard details, Best Management Practices, or as otherwise directed.

All temporary erosion control devices shall be in place and approved by the Resident prior to any operations resulting in disturbed area. The Contractor is responsible for maintaining all erosion control measures in effective operating condition, including repairing and replacing damaged or missing erosion control material until areas are permanently stablized. The Contractor shall maintain these devices in a clean and properly operating condition as described herein.

Prior to construction, the Contractor shall properly install sediment barriers (e.g., silt fence) at the edge of any downgradient disturbed area and adjacent to any drainage channels within the distrubed area. The Contractor shall maintain the sediment barriers until the disturbed area is permanently stabilized.

The Contractor is responsible for all temporary drainage and erosion control measures. The Contractor shall review his construction operations and staging to determine if additional erosion control measures are required. The Resident may also request additional erosion control measures. The cost for all erosion control devices necessary, due solely to the Contractor's construction operations and not shown on the Plans, shall be borne solely by the Contractor. The frequency of inspection of these devices by the Contractor and the Erosion Control Compliance Officer (ECCO) shall be weekly and before, during and immediately following a rainfall of greater than 1/2 inch in a 24-hour period.

656.02 Temporary Erosion and Sedimentation Control Devices - Materials

The Contractor shall install and maintain all temporary erosion and sedimentation control materials in accordance with the manufacturer's recommendations or the latest BMP’s.

1. Baled hay shall be bales at approximately 14 by 18 by 30 inches, or an equivalent, securely tied to form a firm bale.
2. Flexible drainage pipe shall consist of collapsible neoprene pipe, a minimum of 12 inches in diameter or equal.
3. Silt Fence

(a) Posts - Either hardwood posts or steel posts shall be used. Hardwood posts shall be straight, at least 18 inches longer than the height of the silt fence and at least one inch by one inch.

Staples shall be of No. 9 wire.

Steel posts shall be at least 18 inches longer than the height of the silt fence and have the means provided for fastening wire to the fence.

(b) Wire Support Fence - If required, wire support fence shall be at least two inches higher than the height of the silt fence. Horizontal and vertical wires shall be spaced no more than six inches apart. The top and bottom wires shall be at least 10 gauge; all other wires at least 12 gauge.

(c) Fabric - The woven geotextile fabric and components shall be made from polypropylene, polyester, polymide or other chemically stable material and be resistant to ultraviolet radiation degradation for at least 12 months of installation. Silt retention capacity shall be no less than 75 percent. The fabric shall have a Mullen burst test of no less than 260 pounds per square inch with a maximum average sieve opening size of No. 20 to No. 60. Roll width of the fabric shall be no less than six inches wider than the height of the fence, except fabric for boom supported floating silt fence which shall be no less than two feet wider than the design width.

656.03 Temporary Erosion and Sedimentation Control Devices - General

Temporary Erosion Checks - Temporary erosion checks shall be constructed in ditches and at other locations designated. Checks shall be in accordance with the Standard Detail unless otherwise directed.

Baled hay shall be used in other areas as necessary to inhibit soil erosion.

During winter construction, November 1st through April 15th, all areas being constructed within 75 feet of a protected natural resource shall be protected with a double row of silt fence.

Sediment deposits behind haybales and silt fence shall be removed when the depth of sediment reaches 50 percent of the erosion control device height.

The Contractor is also required to have on-site, at all times, 25 percent additional Contract quantities of silt fence for use as backup devices.

656.04 Temporary Erosion and Sedimentation Control Devices – Construction Requirements

1. Erosion Control Filter Berm

The Contractor may opt to furnish and install an erosion control filter berm in lieu of silt fence. The erosion control filter berm shall be a water permeable windrow of a composted bark mix to remove suspended soil particles from water moving off the site. Erosion control filter berm shall be considered an erosion control device. The material and specific application shall be submitted to the Resident for approval.

The erosion control berm shall be placed uncompacted, in a windrow in locations approved by the Resident. The cross section of the berm shall be four feet wide at the base and 1-1/2 feet high at the center. The erosion control filter berm shall be removed when no longer required, as determined by the Resident, and shall be distributed over an adjacent area.

2. Temporary Berms

When designated, temporary barriers shall be constructed along the edge of the embankment. The barriers shall be of embankment earth material, gravel or sand as available and shaped approximately as shown in the Standard Details. The barriers shall be compacted with the wheels of construction equipment. When placed on pavement, the berms shall be constructed of asphalt grindings or other non-erodible soil material as approved by the Resident, and shaped as shown in the Standard Details.

At designated intervals, temporary slope drains shall be constructed with a crescent shaped barrier placed at each slope drain to direct the water into the inlet pipe.

3. Temporary Slope Drains

Collapsible pipe with corrugated metal pipe inlet shall be placed down the embankment slopes at designated locations and in accordance with the Best Management Practices.

At the outlet end of the drain, dumped stone shall be placed to prevent scoring unless otherwise directed.

4. Silt Fence

The silt fence shall be installed downhill of disturbed slopes as shown on the Plans or as approved. The Contractor shall have the option to provide a reinforced filter fabric or an un-reinforced filter fabric attached to a wire fence.

The fence posts shall be spaced as specified by the Resident, however, not to

exceed a maximum of eight feet [2.5 m] apart when either type of silt fence is used and be driven a minimum of 18 inches [450 mm] into the ground.

The geotextile fabric shall be secured to the post or fence by suitable staples, tie wire or hog rings in such a manner as to prevent tearing and sagging of the fabric. The bottom flap of the geotextile fabric shall be entrenched into the ground a minimum depth of six inches [150 mm] to prevent water from flowing under the fence. The geotextile shall be spliced together only at support posts with a minimum six inches [150 mm] overlap and secure post connection which prevents leakage of silt. The top of the geotextile shall be installed with a reinforced top end section.

The Contractor shall maintain the silt fence in a functional condition at all times. All deficiencies shall be immediately corrected by the Contractor. The Contractor shall make a daily inspection of silt fences in areas where construction activity causes drainage runoff, to ensure that the silt fences are properly located for effectiveness. Where deficiencies exist, additional silt fences shall be installed as approved or otherwise directed.

Sediment deposits shall be removed when sediments reach 50 percent of the height of the device. All sediment deposits remaining in place after the device is no longer required shall be graded to conform to the existing ground, seeded and mulched immediately.

Geotextile fabric which has decomposed or has become ineffective and is still needed shall be replaced with material equal to the original design.

656.05 Temporary Erosion and Sedimentation Control Devices - Maintenance

The erosion control devices will be cleaned, repaired or replaced as necessary. All deficiencies shall be corrected immediately by the Contractor.

656.06 Temporary Erosion and Sedimentation Control Devices - Removing and Disposing

When disturbed areas have been permanently stabilized, temporary erosion control devices, including stone check dams, shall be removed. However, erosion control mix filter berms may be spread out, seeded and left to decompose. Areas disturbed during the removal of the erosion control devices shall be repaired and properly stabilized.

When removed, such devices may be reused in other locations provided they are in good condition and suitable to perform the erosion control for which they are intended. Reused devices, if approved, will be measured for payment.

656.07 Erosion Control Compliance Officer

The Contractor shall designate an Erosion Control Compliance Officer (CECCO) on this Project who shall be a "DEP Certified Contractor" or have had equivalent training approved by the Authority. The Contractor shall provide the Resident with the name of the CECCO and any phone numbers or pager numbers that can be used to contact the person in case of emergency.

Before commencing any work that could disturb soils or impact water quality, the CECCO must field review the Project with the Resident's ECCO (RECCO).

656.08 Inspection and Recordkeeping

The CECCO shall accompany the RECCO in the inspection of all erosion control devices. An inspection log shall be maintained by the Resident for the duration of the Project. The log will include daily on-site precipitation and air temperature as well as the performance, failure and/or any corrective action for all erosion and sedimentation controls in place. The log will be updated at least weekly and after all significant storm runoff or flood events. The log shall be signed by the RECCO and the CECCO after each inspection.

Failure to comply with the erosion and sedimentation control requirements herein or as directed by the RECCO within 24-hours after the violation is noted in the inspection log, will result in the $1,000 per day per violation penalty until the violation is corrected to the satisfaction of the Resident.

656.09 Method of Measurement

Baled hay will be measured for payment by the number of bales or bags satisfactorily placed.

Temporary berms and temporary slope drains will be measured for payment by the linear foot measured parallel with the flow line including the pipe inlet.

Temporary silt fence will be measured by the linear foot along the gradient of the fence, end post to end post.

Erosion control filter berm shall be measured by the linear foot.

The quantity of additional haybales and silt fence material required herein will be measured for payment only when and if they are actually put to use as additional measures on the Project as approved by the Resident. Haybales and silt fence material used for maintenance or replacement of existing devices will not be measured for payment.

The removal of silt and other material from behind the erosion control devices will not be measured separately for payment, but shall be incidental to the Erosion Control items.

656.10 Basis of Payment

The accepted quantity of baled hay will be paid for at the Contract unit price each for each bale which price shall be full compensation for furnishing and placing the bales, for furnishing and driving the stakes for baled hay, for maintaining the bales and stakes, and for the removing and disposing of the bales and stakes when no longer needed.

The accepted quantity of temporary berms will be paid for at the Contract unit price per linear foot of berm which price shall be full compensation for furnishing, placing and compacting material, for maintaining and for removing the berm when no longer needed.

There will be no separate payment for excavation in the construction of temporary erosion control items under this Section and all necessary excavation shall be incidental to the work.

The accepted quantity of temporary silt fence will be paid for at the Contract unit price per linear foot complete in place. Payment shall be full compensation for furnishing, installing, maintaining, replacing deteriorated geotextile and clogged geotextile when required and for removing and disposing of the fence when no longer needed.

The accepted quantity of erosion control filter berm will be paid for at the Contract unit price per linear foot under Item 656.632, 30 Inch Temporary Silt Fence, which price shall be full compensation for furnishing, placing, maintaining, and removing the erosion control filter berm.

Cost of seeding and mulching the area after removal of the temporary silt fence will be paid for at the Contract unit prices for Item 618, Seeding, and Item 619, Mulch.

Payment will be made under:

Pay Item		Pay Unit
656.50	Baled Hay, in place	Each
656.60	Temporary Berms	Linear Foot
656.62	Temporary Slope Drains	Linear Foot
656.632	30” Temporary Silt Fence	Linear Foot

SPECIAL PROVISION

SECTION 719

SIGNING MATERIAL

Delete Section 719.01 Reflective Sheeting and replace with the following:

Section 719.01 Reflective Sheeting Retroreflective sheeting for signs shall meet at a minimum the requirements for, ASTM 4956 – Type VII, Type VIII or Type IX (Prismatic), for all signs. All Type 1 Guide Signs shall meet at a minimum the requirements for ASTM 4956 –Type IX (Prismatic) sheeting.

Reflective sheeting, used in sign construction, shall have been manufactured within the six months immediately prior to the fabrication of each sign. Upon delivery at the job site of each shipment of signs, a letter of certification shall be provided that the reflective sheeting conforms to the requirements.

For Type 1 Guide Signs, all reflective sheeting shall be color matched on each sign unit.

All warning signs shall be fluorescent yellow except for Ramp Advisory Speed signs which shall be yellow.

All Construction Series signs shall be fluorescent orange.

All Pedestrian Signs shall be fluorescent yellow-green.

EZ-PASS Purple shall conform to the FHWA Purple color block.

Delete Section 719.02 Demountable High Intensity Reflectorized Letters, Numerals, Symbols, and Borders and replace with the following:

719.02 Demountable Reflectorized Letters, Numerals, Symbols, and Borders Demountable reflectorized letters, numerals, symbols and borders shall consist of cut out sheeting shall meet at a minimum the requirements for ASTM 4956 – Type VII, Type VIII or Type IX (Prismatic) sheeting.

All Type 1 Guide Signs shall meet at a minimum the requirements for ASTM 4956 –Type IX (Prismatic) sheeting.

SPECIAL PROVISION

SECTION 800

MISCELLANEOUS INCIDENTALS

(Electrical Demolition)

800.11 Description

This work shall consist of furnishing and installing materials and components to remove conduit, wires, wireways, cables, outlets, panels, lighting, overhead canopy lighting and all other related electrical equipment show in the Plans. Work shall be completed in a phased manner. Work shall also include modifying existing lightning suppression system for the toll plaza canopy.

The Contractor shall adhere to lockout/tagout procedures noted in the General Provisions. All electrical systems shall remain operational unless noted in the Plans.

Both dirty and clean power are available in the toll plaza. The Contractor shall take care to maintain both power sources and clearly delineate both in the electrical demolition plan.

Work shall include Contractor submitting a demolition plan noting the sequence of electrical demolition to the Resident for approval prior to beginning demolition work. Electrical demolition work will occur during Phases 1, 2, and 3. The Contractor shall coordinate installation of proposed work and electrical demolition.

Abandoned wireways, junction boxes, conduit identified to remain shall be tagged or capped as appropriate.

The work in this item generally includes, but is not limited to demolition and removal of, or portions thereof, the following:

a. Toll Booths and Toll Islands: Associated electrical, communication systems, and structural components as noted on the Plans, *including but not limited to:* booth power, bumper mounted flashing beacons, switches, wiring, conduits, junction boxes, electrical outlets, pulleys, cables, controllers, communication lines, talk boxes, hangers, posts, and braces.

   Prior to demolition of Islands C and E the Contractor shall verify all communication and power lines in the plaza roof columns for Islands C and E. The Contractor shall submit for review a line diagram of all data, power and any other lines in Islands C and E columns showing origin and destination. Lines associated with equipment to remain (including equipment required to be operating for intermediate phases of construction) shall be re-routed. This work shall be coordinated with the Resident and the system integrator. Work associated with verification and submittal review shall be incidental to this item.

Work associated with re-routing wires will be paid for by the individual labor and material pay items.

b. Tunnel: Electrical and communication components and apparatus associated with the removal of toll booths, booth islands and canopy including but not limited to all subpanels, conduits, switches, wiring, raceways, lighting, junction boxes, outlets, supports, and communication lines.

c. Canopy: Associated electrical, communication systems, and related structural components, *including but not limited to* canopy lane lighting, canopy mounted red/green lights, canopy mounted sign lighting, heat tapes, portions of the lightning suppression system, overhead sensors and AVI antennas.

d. Salvaged Items: Certain items shall be salvaged and delivered to various locations as noted in Plans.

Basis of Payment

Payment to be made as lump sum for all electrical demolition required including the delivery of specified items noted in the Plans. All labor and materials required will be incidental to this item.

Payment will be made under:

Pay Item		Pay Unit
800.10	Electrical Demolition	Lump Sum

SPECIAL PROVISION

SECTION 800

MISCELLANEOUS INCIDENTALS

(Mechanical Demolition)

800.21 Description

This work shall consist of removing mechanical systems as well as all other related mechanical equipment shown in the Plans. Work shall be completed in a phased manner.

Contractor shall adhere to lockout/tagout procedures noted in the General Provisions.

This item generally includes, but is not limited to demolition and removal of, or portions thereof, the following:

a. Toll Booths and Toll Islands: Associated mechanical and control systems and structural components, *including but not limited to* booth heaters, hot water supply and return piping, valves, rollers, framing, bracing, actuators, thermostats, controllers, talk boxes, and hangers.

b. Tunnel: Mechanical system components associated with the removal of toll booths, booth islands and canopy including but not limited to all mechanical supports, hot water supply and return piping, actuators, valves, heating coils, vents, control system components, and thermostats.

Work shall include Contractor submitting a demolition plan noting the sequence of mechanical demolition to the Resident for approval prior to beginning demolition work. Mechanical demolition work will occur during Phases 1, 2, and 3. Contractor shall coordinate installation of proposed work and mechanical demolition.

800.23 Basis of Payment

Payment to be made as lump sum for all mechanical demolition required. All labor and materials required will be incidental to this item.

Payment will be made under:

Pay Item		Pay Unit
800.20	Mechanical Demolition	Lump Sum

SPECIAL PROVISION

SECTION 800

MISCELLANEOUS INCIDENTALS

(Toll Plaza Facility Demolition and Restoration)

800.31 Description

This work shall consist of furnishing and installing materials and components to demolish, salvage, modify and transport select elements of the toll plaza as shown on the Plans or described herein for reuse by the Authority. Work shall be completed in a phased manner during Phases 1 and 2. Salvaged elements shall be carefully dismantled, handled, and transported to the Maine Turnpike Sign Shop at Mile Marker 58.3 northbound.

The following work in this item generally includes, but is not limited to the following:

1. Three existing booth enclosures shall be carefully removed, handled, delivered and unloaded at the Maine Turnpike Sign Shop at Mile Marker 58.3, NB. The Contractor shall take special care not to damage booths.
2. The Contractor shall install new columns, cross beams and sign supports at Islands B and F as shown on the Plans.
3. Canopy columns for Islands C and E shall be carefully removed, handled, and delivered to the Maine Turnpike Sign Shop at Mile Marker 58.3 NB. Concrete shall be carefully removed around the base of the canopy columns to expose the base plates for removal.
4. Existing field splice shall be modified.
5. The existing drainage shall be modified which includes installing new or relocated roof drains.
6. The Contractor shall remove a portion of the canopy in stages as shown on the Plans. The Contractor shall take special care not to damage unused suspended ceiling panels, fascia panels, structural steel and all other canopy structural components. All bolted connections shall be unbolted unless otherwise approved by the Resident. All unused canopy structural components shall be delivered to the Maine Turnpike Sign Shop at Mile Marker 58.3, NB.
7. After the center portion of the canopy is removed, the Contractor shall review exposed interior of remaining canopy and replace any deteriorated ceiling connections as described in Appendix H. This work will be done on an as needed basis as directed by the Resident, up to 100 locations.
8. Newly exposed ends of the canopy shall be closed as shown in the Plans.
9. The Contractor shall reseal all seams of remaining portions of the canopy.
10. All work on the canopy roof system shall be performed by the roofing systems product manufacture's certified installer.

11. The Contractor shall deliver the removed signs mounted to concrete toll plaza islands, canopy columns, structural steel, and booths to the Maine Turnpike Sign Shop at Mile Marker 58.3, NB.

Items not included in this item are:

1. Removal of canopy mounted signs, luminaires will be paid under Item 645.107
2. Removal of concrete toll islands, bumpers, pavement slab, and approach slab will be paid under Item 202.17 Removing Existing Structural Concrete.
3. Removal of electrical and mechanical components will be paid under Items 800.10 Electrical Demolition and 800.20 Mechanical Demolition respectively.
4. Structural slab repair will be under Items 518.64 Concrete Slab Crack Repairs, 518.81 Partial Depth Concrete Slap Repairs I, 518.82 Partial Depth Concrete Slab Repairs II, and 518.83 Full Depth Concrete Slab Repairs.

The Contractor shall ensure that traffic will be protected from debris and construction operations. Care shall be taken not to damage electrical and mechanical

800.32 Construction Requirements

Construction requirements shall be in accordance with National Electric Code (latest version), International Building Code (latest Version), ASTM standards (latest version), or best industry standards and practices when not addressed in any of the above references.

800.33 Materials

All material proposed by the Contractor to be used in the restoration of the toll plaza shall be submitted to the Resident for approval prior to the start of the demolition work.

800.34 Method of Measurement

The toll plaza facility demolition and restoration will be measured for payment as one lump sum unit, complete, and accepted.

800.35 Basis of Payment

The accepted quantity of Toll Plaza Facility Demolition and Restoration will be paid for at the Contract lump sum price. Temporary stacking, storing, transporting, labor and materials required shall be incidental to this item.

Payment will be made under:

Pay Item		Pay Unit
800.30	Toll Plaza Demolition and Restoration	Lump Sum

MAINE TURNPIKE AUTHORITY

SPECIFICATIONS

PART III – APPENDICES

APPENDIX A

PERMITS

Chapter 305: PERMIT BY RULE

1. **Introduction.** A "permit by rule" or "PBR", when approved by the Department of Environmental Protection (DEP), is an approval for an activity that requires a permit under the Natural Resources Protection Act (NRPA). Only those activities described in this chapter may proceed under the PBR process. A PBR activity will not significantly affect the environment if carried out in accordance with this chapter, and generally has less of an impact on the environment than an activity requiring an individual permit. A PBR satisfies the Natural Resources Protection Act (NRPA) permit requirement and Water Quality Certification requirement.

   If a proposed activity is not described in this chapter, or will not be conducted in accordance with the standards of this chapter, the applicant must obtain an individual permit prior to beginning the activity.

   A. **Location of activity.** The location of an activity may affect whether an activity qualifies for PBR, and whether review by the Department of Inland Fisheries and Wildlife is required.

      (1) Type of resource. For some types of activities, the availability of a PBR is affected by the type of natural resource in or adjacent to which the activity is proposed. For example, an applicant proposing an activity consisting of "Movement of rocks or vegetation" may receive a PBR only if the activity will take place in a great pond, river, stream or brook. Limitations concerning the location of activities are addressed in the "Applicability" provision in each section of this chapter.

      (2) Essential habitat. Essential habitats include areas critical to the survival of threatened and endangered species such as the bald eagle, least tern, roseate tern, and piping plover. If the activity is located in essential habitat, such as near an eagle nesting site, a PBR is only available if the applicant obtains written approval from the Department of Inland Fisheries and Wildlife (IF&W). This approval from IF&W must be submitted to the DEP with the PBR notification form, and the applicant must follow any conditions stated in the IF&W approval.

NOTE: Maps showing areas of essential habitat are available from the Department of Inland Fisheries and Wildlife regional headquarters, municipal offices, the Land Use Regulation Commission (for unorganized territories) and DEP regional offices. If the activity is located in essential habitat, IF&W must be contacted to request and obtain a "certification of review and approval".

   B. **Notification.** The applicant must file notice of the activity with the DEP prior to beginning work on the activity. The notification must be on a form provided by the DEP and must include any submissions required in this chapter. The applicant must keep a copy to serve as the permit.

      The notification form must be sent to the DEP by certified mail (return receipt requested), or hand delivered to the DEP and date stamped by the department. By signing the notification form, the applicant is representing that the activity will meet the applicability requirements and standards of the rule. In addition, by signing the notification form the applicant represents that the applicant has sufficient title, right, or interest in the property where the proposed activity is to take place.

C. Effective period

(1) Beginning of period. The PBR becomes effective 14 calendar days after the DEP receives the notification form, unless the DEP approves or denies the PBR prior to that date. If the DEP does not speak with or write to the applicant within this 14 day period regarding the PBR notification, the applicant may proceed to carry out the activity.

There are three exceptions regarding the effective date of an approved PBR:

(a) Activities listed in Section 10 (Stream crossings) occurring in association with forest management are exempt from the 14 day waiting period.

(b) Activities listed in Section 10 (Stream crossings) performed or supervised by individuals currently certified in erosion control practices by the DEP are exempt from the 14 day waiting period. To be certified in erosion control practices, an individual must successfully complete all course requirements of the Voluntary Contractor Certification Program administered by the DEP's Nonpoint Source Training and Resource Center.

(c) Activities that are part of a larger project requiring a permit under the Site Location of Development or the Storm Water Management Acts may not proceed until any required permit under those laws is obtained.

NOTE: Activities that are part of a larger project may require other permits from the DEP also. These other laws may prohibit the start of construction of any part of the project unless a permit under that law is obtained. In these cases, while not a violation of this rule, starting work on a PBR approved activity would be a violation of those other applicable laws.

(2) End of period. The PBR is generally effective for 2 years from the date of approval, except that a PBR for "Replacement of structures" under Section 4 is effective for 3 years.

NOTE: Activities that qualify under this chapter may need to meet other local, state and federal requirements. Examples -- (1) If an activity extends below the low water line of a lake, coastal wetland or international boundary water, the applicant should contact the Bureau of Parks and Lands (287-3061) concerning possible lease or easement requirements, or (2) If an activity will involve work below the mean high water line in navigable waters of the United States, the applicant should contact the Army Corps of Engineers (623-8367).

D. Discretionary authority. Notwithstanding compliance with the PBR applicability requirements and standards set forth in this chapter, the DEP may require an individual permit application to be filed in any case where credible evidence indicates that the activity:

(1) May violate the standards of this rule or the NRPA (38 M.R.S.A. Section 480-D);

(2) Could lead to significant environmental impacts, including cumulative impacts; or

(3) Could adversely impact a resource of special concern.

If an individual permit is required pursuant to this subsection, the DEP shall notify the applicant in writing within the 14 calendar day waiting period described in sub-section (C) above. When the DEP notifies an applicant than an individual permit is required, no work may be conducted unless and until the individual permit is obtained.

E. Violations. A violation of law occurs when a person, or his or her agent, performs or causes to be performed any activity subject to the NRPA without first obtaining a permit from the DEP, or acts contrary to the provisions of a permit. The person, his or her agent, or both, may be held responsible for the violation. Commonly, the "person" is the landowner, and the "agent" is the contractor carrying out the activity. A violation occurs when:

(1) An activity occurs that is not allowed under PBR, whether or not a PBR notification form has been filed with and/or approved by the DEP;

(2) An activity occurs that is allowed under PBR, but a PBR for the activity has not become effective prior to the beginning of the activity; or

(3) An activity occurs that is allowed under PBR and a PBR for the activity is in effect, but the standards specified in this chapter are not met.

See the "applicability" provision under each activity for rules concerning what activities are allowed under PBR. A PBR is only valid for the person listed on the notification form, or for his or her agent.

Each day that a violation occurs or continues is considered a separate offense. Violations are subject to criminal penalties and civil penalties of not less than $100 nor more than $10,000 for each day of that violation (38 M.R.S.A. Section 349).

NOTE: A local Code Enforcement Officer (CEO) may take enforcement action for a violation of the Natural Resources Protection Act if he or she is authorized to represent a municipality in District Court, and he or she has been certified as familiar with court procedures, 30-A M.R.S.A. Section 4452(7).

---

2. Activities adjacent to protected natural resources

A. Applicability

(1) This section applies to an activity adjacent to, but not in:

(a) A coastal wetland, great pond, river, stream or brook or significant wildlife habitat contained within a freshwater wetland; or

(b) Freshwater wetlands consisting of or containing:

(i) Under normal circumstances, at least 20,000 square feet of aquatic vegetation, emergent marsh vegetation or open water, except for artificial ponds or impoundments; or

(ii) Peatlands dominated by shrubs, sedges and sphagnum moss.

(2) This section does not apply to an activity where sustained slopes are steeper than 3 horizontal feet: 1 vertical foot (approximately 33% slope) between the normal high water line or upland edge of the protected resource and the soil disturbance.

(3) Activities that qualify for permit by rule under another section are not required to comply with this section unless expressly stated in that section.

(4) This section does not apply to an activity that is not or will not be in compliance with the terms and conditions of a permit issued under the Site Location of Development Law, 38 M.R.S.A. Sections 481 to 490, the Storm Water Management Law, 38 M.R.S.A. Section 420-D, or the Natural Resources Protection Act, 38 M.R.S.A. Sections 480-A to 480-Z.

(5) This section does not apply to an activity that does not conform to the local shoreland zoning ordinance.

NOTE: Contact the local Code Enforcement Officer for information on local shoreland zoning requirements. In most shoreland areas, a 75 or 100 foot undisturbed buffer strip is required between the disturbed areas and the water or wetland.

B. Submissions

(1) The applicant is required to submit photographs of the area which will be affected by the activity proposed.

(2) Photographs showing the completed project and the affected area must be submitted within 20 days of the activity's completion. The photographs must be sent with a copy of the notification form or labeled with the applicant's name and the town in which the activity took place.

(3) A brief narrative explaining why there is no practicable alternative to location of the activity within the 75 foot setback, and how the impact on the remaining buffer and the resource will be minimized. This narrative is not required for those activities presumed to have no practicable alternative as listed in paragraph C(1) of this section.

(4) A scaled plan or drawing of the area affected, including information such as:

(a) The entire property on which the activity will take place, including property lines, the 75 foot setback, and the boundaries or location of protected natural resources such as streams and wetlands;

(b) Proposed and existing development on the parcel including buildings, parking areas, roads, fill areas, landscaped areas, etc.; and

(c) Any site constraints limiting development beyond the 75 foot setback, such as steep slopes.

It is not necessary to have the plan professionally prepared. However, it must be legible and drawn to a scale that allows clear representation of distances and measurements on the plan.

C. Standards

(1) No activity or portion of an activity may be located within the 75 foot setback if there is a practicable alternative location on the parcel that would cause or result in less impact on the environment. The following activities are presumed to have no practicable alternative location on the parcel.

(a) The planting of vegetation for the purpose of controlling erosion or for establishing a vegetative buffer.

(b) The removal or replacement of underground storage tanks when performed in accordance with 38 M.R.S.A. Section 566-A.

(c) The replacement of a structure or the placement or replacement of a foundation or supports for a legally existing structure or addition that is not closer to a protected natural resource than the existing structure provided the municipality has approved the location of the replaced or modified structure. However, any fill, other than that required to maintain the integrity of the structure such as foundation backfill, must meet the 75 foot setback standard unless otherwise approved by the DEP pursuant to this section.

NOTE: In most cases when a structure is being replaced or a foundation is being put under an existing structure that does not meet the setback requirements of the Municipal Shoreland Zoning Ordinance, the applicant is required by the municipality to move the structure back from the natural resource to the maximum extent practicable.

(d) The closure of a landfill in conformance with the DEP's solid waste management rules.

(e) Access way consisting of a footpath, stairway, or steps to the resource.

(2) Except for those activities listed in Section 2(C)(1)(a)-(e) above, a 25 foot setback must be maintained between the normal high water line or upland edge of the protected natural resource and the activity. Areas that have slopes of 3 horizontal feet: 1 vertical foot (approximately 33% slope), or steeper, may not be counted when determining the 25 foot setback. Existing vegetation within the setback may not be disturbed except for cutting activity meeting the exemption requirements in 38 M.R.S.A. Section 480-Q(23).

(3) Disturbance within the setback must be minimized.

(4) The following measures must be taken to prevent erosion of soil or fill material from disturbed areas:

(a) Staked hay bales or silt fence must be properly installed at the edge of disturbed areas between the activity and the resource before the activity begins;

(b) Hay bales or silt fence barriers must be maintained until the disturbed area is permanently stabilized;

(c) Within 7 calendar days following the completion of any soil disturbance, and prior to any storm event, mulch must be spread on any exposed soils;

(d) All disturbed soils must be permanently stabilized; and

(e) Within 30 days of final stabilization of the site, any silt fence must be removed.

(5) A footpath to the resource is limited to 6 feet in width and stairs or steps are limited to 4 feet in width.

(6) All work is limited to the location and extent depicted on the plan or plans submitted pursuant to subsection B(4) of this section.

NOTE: For guidance on erosion and sedimentation controls, consult the Maine Erosion and Sediment Control BMPs, dated March 2003. This handbook and other references are available from the DEP.

D. Definitions. The following terms, as used in this chapter, have the following meanings, unless the context indicates otherwise:

(1) **Fill**. a. (verb) To put into or upon, supply to, or allow to enter a water body or wetland any earth, rock, gravel, sand, silt, clay, peat, or debris; b. (noun) Material, other than structures, placed in or adjacent to a water body or wetland.

(2) **Land adjacent to a protected natural resource**. Any land area within 75 feet, measured horizontally, of the normal high water line of a great pond, river, stream or brook or the upland edge of a coastal wetland or freshwater wetland.

(2-A) **Practicable**. Available and feasible considering cost, existing technology and logistics based on the overall purpose of the project.

(3) **Structure**. Anything built for the support, shelter or enclosure of persons, animals, goods or property of any kind, together with anything constructed or erected with a fixed location on or in the ground. Examples of structures include buildings, utility lines and roads.

(4) **Upland edge**. The boundary between upland and wetland.

NOTE:
Section 480-Q(15-A) of the NRPA exempts the installation, removal or repair of a septic system from permitting requirements as of March 1, 1995, as long as the system complies with all requirements of the subsurface wastewater disposal rules adopted by the Department of Human Services pursuant to 22 M.R.S.A. Section 42(3).

---

3. Intake pipes & water monitoring devices

A. Applicability

(1) This section applies to the installation or maintenance of a permanent water intake pipe which will not significantly affect the water level or flow of waters within a coastal wetland, freshwater wetland, great pond, river, stream or brook. This section also applies to the installation of a well in or adjacent to a freshwater wetland or adjacent to a great pond, coastal wetland, river, stream or brook. Allowed uses of water for the purposes of this

section include a water supply for a single family residence and a dry hydrant. Some intake pipes and wells adjacent to a great pond may be exempt by law (see Note 2 at the end of this subsection).

(2) This section also applies to the installation or maintenance of a permanent device used to monitor water elevations, flow or quality including a gauging station, staff gauge, tide gauge, water recording device, water quality testing and improvement device or other similar scientific equipment within a coastal wetland, freshwater wetland great pond, river, stream or brook.

(3) This section does not apply to an activity that is not or will not be in compliance with the terms and conditions of a permit issued under the Site Location of Development Law, 38 M.R.S.A. Sections 481 to 490, the Storm Water Management Law, 38 M.R.S.A. Section 420-D, or the Natural Resources Protection Act, 38 M.R.S.A. Sections 480-A to 480-Z.

(4) This section does not apply to an activity that will not conform to the local shoreland zoning ordinance.

NOTES:

(1) Contact the local Code Enforcement Officer for information on local shoreland zoning requirements.

(2) In a great pond, the placement of water lines to serve a single-family house or the installation of cables for utilities, such as telephone and power cables, is exempt from permit requirements under 38 M.R.S.A. Section 480-Q provided that the:

(a) Excavated trench for access to the water is backfilled and riprapped to prevent erosion;

(b) Excavated trench on the landward side of the riprapped area is seeded and mulched to prevent erosion; and

(c) Bureau of Parks and Lands has approved the placement of the cable across the bottom of the great pond to the extent that it has jurisdiction.

(3) A permit will be required from the US Army Corps of Engineers for the following types of projects:

(a) Any activity involving open trench excavation in a waterbody or wetland;

(b) Any activity in coastal waterways;

(c) Any activity within a river, stream or brook that takes place between October 2 and July 14.; or

(d) Any activity involving work in waterways designated as Essential Fish Habitat for Atlantic salmon including all aquatic habitats in the watersheds of the following rivers and streams, including all tributaries to the extent that they are currently or were historically accessible for salmon migration: St. Croix, Boyden, Dennys, Hobart Stream, Aroostook, East Machias, Machias, Pleasant, Narraguagus, Tunk Stream, Patten Stream,

Orland, Penobscot, Passagassawaukeag, Union, Ducktrap, Sheepscot, Kennebec, Androscoggin, Presumpscot, and Saco River.

A copy of the PBR notification and original photographs, not photocopies, should be submitted to the Corps of Engineers for these activities (US Army Corps of Engineers, 675 Western Avenue, Suite #3, Manchester, ME 04351. Tel. (207) 623-8367).

B. Submissions

(1) For an activity occurring in tidal waters, notice of approval of the timing of the activity from the Department of Marine Resources must be submitted to the DEP with the notification form.

(2) The applicant is required to submit photographs of the area which will be affected by the activity proposed.

(3) Photographs showing the completed project and the affected area must be submitted within 20 days of the activity's completion. The photographs must be sent with a copy of the notification form or labeled with the applicant's name and the town in which the activity took place.

C. Standards

(1) The following measures must be taken to prevent erosion of soil or fill material from disturbed areas into the resource:

(a) Staked hay bales or silt fence must be properly installed between the area of soil disturbance and the edge of the resource before the activity begins;

(b) Hay bales or silt fence barriers must be maintained until the disturbed area is permanently stabilized;

(c) Within 7 calendar days following the completion of any soil disturbance, and prior to any storm event, mulch must be spread on any exposed soils;

(d) All disturbed soils must be permanently stabilized; and

(e) Within 30 days of final stabilization of the site, any silt fence must be removed.

NOTE: For guidance on erosion and sedimentation controls, consult the Maine Erosion and Sediment Control BMPs, dated March 2003. This handbook and other references are available from the DEP.

(2) Disturbance of wetland vegetation must be avoided if possible. If wetland vegetation must be disturbed during the activity, it must be replaced or reestablished immediately upon completion of the activity and must be maintained.

(3) Non-native wetland plants may not be planted in disturbed areas.

(4) The trench width in any protected natural resource must be no wider than necessary to install the device.

(5) Any trench in or adjacent to the wetland must be refilled with the material that was excavated. The original grading and elevation of the wetland must be restored. Residual fill material must be removed from the wetland or water body and properly stabilized. Pipe bedding material such as crushed stone or sand may be used provided clay dams or synthetic boots are used where appropriate to prevent wetland draining through the bedding material.

(6) The water intake structure may not interfere with any potential boat usage and may not block fish passage.

(7) If the activity occurs within tidal waters, the activity must occur during the time period approved by the Department of Marine Resources.

(8) Excavation of a pool to increase depth is prohibited under this section.

(9) Maintenance clearing of deposited debris and sediments from the intake area is allowed provided the cleared materials are removed from the resource and are disposed of in an upland location at least 75 feet from any open water body and stabilized to prevent erosion unless a closer upland disposal area is approved under Section 2 of this rule. Disposal of any dredged material or debris must be carried out in conformance with Maine Hazardous Waste, Septage and Solid Waste Management Act, 38 M.R.S.A. Sections 1301 *et seq.* Clearing or removal of sediment from a water body for other purposes is not allowed under this section.

(10) If work is performed in a river, stream or brook that is less than three feet deep at the time of the activity and at the location of the activity, the applicant must provide for temporary diversion of flow to the opposite side of the channel while work is in progress.

(a) Diversion may be accomplished by placing sandbags, timbers, sheet steel, concrete blocks, 6+ mil polyethylene or geotextiles from the bank to midstream on the upstream side of the activity. No more than two-thirds (2/3) or 25 feet of stream width, whichever is less, may be diverted at one time.

(b) Any material used to divert water flow must be completely removed upon completion of the activity, and the stream substrate must be restored to its original condition.

(c) A pump may be operated, where necessary, for a temporary diversion. The pump outlet must be located and operated such that erosion or the discharge of sediment to the water is prevented.

(11) Wheeled or tracked equipment may not be operated in the water. Equipment operating on the shore may reach into the water with a bucket, or similar extension. Equipment may cross streams on rock, gravel or ledge bottom.

(12) Wheeled or tracked equipment that must travel or work in a vegetated wetland area must travel and work on mats or platforms in order to protect wetland vegetation.

(13) Work below the high water line of a great pond, river, stream or brook must be done at low water, except as required for emergency flood control work. Measures such as a silt boom or staked fencing must be employed to reduce and isolate turbidity.

(14) Uncured concrete may not be placed directly into the water. Concrete must be pre-cast and cured at least three weeks before placing in the water, or where necessary, must be placed in forms and cured at least one week before the forms are removed. No washing of tools, forms, etc. may occur in or adjacent to the waterbody or wetland.

(15) The use of untreated lumber is preferred. Lumber pressure treated with chromated copper arsenate (CCA) may be used only if necessary and only if use is allowed under federal law and not prohibited from sale under 38 M.R.S.A. 1682, provided it is cured on dry land in such a manner to expose all surfaces to the air for a period of at least 21 days prior to construction. Wood treated with creosote or pentachlorophenol may not be used where the wood will come in contact with water.

(16) Blasting in inundated areas is prohibited.

D. Definitions. The following terms, as used in this chapter, have the following meanings, unless the context indicates otherwise:

(1) **Land adjacent to a protected natural resource**. Any land area within 75 feet, measured horizontally, of the normal high water line of a great pond, river, stream or brook or the upland edge of a coastal wetland or freshwater wetland.

(2) **Non-native wetland plants**. Wetland grasses, forbs, shrubs, or trees not native to the State of Maine, for example, common reed (*Phragmites communis*) and purple loosestrife (*Lythrum salicaria*).

4. Replacement of structures

A. Applicability

(1) This section applies to the replacement of an existing permanent structure in, on, or over a coastal wetland, freshwater wetland, great pond, fragile mountain area, or river, stream or brook. Some activities involving maintenance and repair of a permanent structure may not require a permit (see note 2 at the end of this section).

(2) In order to be eligible for this section, the structure must have been in place and functioning as intended within 24 months of the DEP's receipt of the notification form. A permit by rule for replacement is valid for three years from the date of approval.

(3) This section does not apply to the replacement of a structure adjacent to a protected natural resource. (See Section 2: Activities adjacent to protected natural resources.)

(4) This section does not apply to structures located within a sand dune system. (See Section 16: Activities in coastal dune systems.)

(5) This section does not apply to the replacement of a dam or a tidal flood gate.

(6) This section does not apply to an activity that is not or will not be in compliance with the terms and conditions of permits issued under the Site Location of Development Law, 38 M.R.S.A. Sections 481 to 490, the Storm Water Management Law, 38 M.R.S.A. Section 420-D, or the Natural Resources Protection Act, 38 M.R.S.A. Sections 480-A to 480-Z.

(7) This section does not apply to an activity that will not conform to the local shoreland zoning ordinance.

NOTE: Contact the local Code Enforcement Officer for information on local shoreland zoning requirements

B. Submissions

(1) For an activity occurring in tidal waters, notice of approval of timing of the activity from the Department of Marine Resources must be submitted to the DEP with the notification form.

(2) The applicant is required to submit photographs of the area which will be affected by the activity proposed.

(3) Photographs showing the completed project and the affected area must be submitted within 20 days of the activity's completion. The photographs must be sent with a copy of the notification form or labeled with the applicant's name and the town in which the activity took place.

(4) A scaled plan or drawing of the structure to be replaced that includes at a minimum the location, width, length and height of the existing structure.

It is not necessary to have the plan professionally prepared. However, it must be legible and drawn to a scale that provides a clear representation of distances and measurements on the plan.

C. Standards

(1) A replaced structure that is located in, on, or over a protected natural resource may not exceed the dimensions, including height, of the previously existing structure, and may not extend any further into the water body or wetland, except that retaining walls may be reinforced with a facing material not exceeding 6 inch in width or may be replaced with riprap in accordance with Section 8 "Shoreline stabilization".

NOTE: Vegetation is the preferred method of erosion control near water bodies. Where the use of vegetation is not feasible, riprap is preferred over retaining walls because it dissipates wave action and is a more stable structure over the long term. The DEP encourages the replacement of retaining walls with riprap, unless the presence of large trees or structures makes its use impractical.

(2) The following measures must be taken to prevent erosion of soil or fill material from disturbed areas into the protected resources:

(a) Staked hay bales or silt fence must be properly installed between the area of soil disturbance and the edge of the resource before the activity begins;

(b) Hay bales or silt fence barriers must be maintained until the disturbed area is permanently stabilized;

(c) Within 7 calendar days following the completion of any soil disturbance, and prior to any storm event, mulch must be spread on any exposed soils;

(d) All disturbed soils must be permanently stabilized; and

(e) Within 30 days of final stabilization of the site, any silt fence must be removed.

NOTE: For guidance on erosion and sedimentation controls, consult the Maine Erosion and Sediment Control BMPs, dated March 2003. This handbook and other references are available from the DEP.

---

(3) Disturbance of wetland vegetation must be avoided if possible. If wetland vegetation must be disturbed during the activity, it must be reestablished immediately upon completion of the activity and must be maintained.

(4) Non-native wetland plants may not be planted in disturbed areas.

(5) Work done in a river, stream or brook must allow for fish passage and the maintenance of normal stream flows at all times of year and may not impound water.

(6) No dredging may take place during the activity and no material may be removed from the affected natural resource except that rocks that were part of the original structure may be removed or reused.

(7) Work below the high water line of a great pond, river, stream or brook must be done at low water, except as required for emergency flood control work. Measures, such as a silt boom or staked fencing, must be employed to reduce and isolate turbidity.

(8) If the activity occurs within tidal waters, the activity must occur during the time period approved by the Department of Marine Resources.

(9) If work is performed in a river, stream or brook that is less than three feet deep at the time of the activity and at the location of the activity, the applicant must provide for temporary diversion of flow to the opposite side of the channel while work is in progress.

(a) Diversion may be accomplished by placing sandbags, timbers, sheet steel, concrete blocks, 6+ mil polyethylene or geotextiles from the bank to midstream on the upstream side of the activity. No more than two-thirds (2/3) or 25 feet of stream width, whichever is less, may be diverted at one time.

(b) Any material used to divert water flow must be completely removed upon completion of the activity, and the stream substrate must be restored to its original condition.

(c) A pump may be operated, where necessary, for a temporary diversion. The pump outlet must be located and operated such that erosion or the discharge of sediment to the water is prevented.

(10) Wheeled or tracked equipment may not be operated in the water. Equipment operating on the shore may reach into the water with a bucket or similar extension. Equipment may cross streams on rock, gravel or ledge bottom.

(11) All wheeled or tracked equipment that must travel or work in a vegetated wetland area must travel and work on mats or platforms in order to protect wetland vegetation.

(12) All debris or excavated material must be stockpiled either outside the wetland or on mats or platforms. Hay bales, silt fence or mulch must be used, where necessary, to prevent sedimentation. Any debris generated during the activity must be prevented from washing downstream and must be removed from the wetland or water body. Disposal of debris must be in conformance with Maine Hazardous Waste, Septage and Solid Waste Management Act, 38 M.R.S.A. Section 1301 *et seq.*

(13) Uncured concrete may not be placed directly into the water. Concrete must be pre-cast and cured at least three weeks before placing in the water, or where necessary, must be placed in forms and cured at least one week before the forms are removed. No washing of tools, forms, etc. may occur in or adjacent to the waterbody or wetland.

(14) The use of untreated lumber is preferred. Lumber pressure treated with chromated copper arsenate (CCA) may be used only if necessary and only if use is allowed under federal law and not prohibited from sale under 38 M.R.S.A. 1682, and provided it is cured on dry land in such a manner as to expose all surfaces to the air for a period of at least 21 days prior to construction. Wood treated with creosote or pentachlorophenol may not be used where the wood will come in contact with water.

(15) The replaced structure may not interfere with, or reduce the opportunity for, existing navigational and recreational uses of the site.

D. Definitions. The following terms, as used in this chapter, have the following meanings, unless the context indicates otherwise:

(1) **Dam**. Any man-made artificial barrier, including appurtenant works, the site on which it is located and appurtenant rights of flowage and access, that impounds or diverts a river, stream or brook or great pond.

(2) **Dredge**. To move or remove, by digging scooping or suctioning any sand, silt, mud, gravel, rock, or other material from the bottom of a water body or wetland surface.

(3) **Fill**. a. (verb) To put into or upon, supply to, or allow to enter a water body or wetland any earth, rock, gravel, sand, silt, clay, peat, or debris; b. (noun) Material, other than structures, placed in or adjacent to a water body or wetland.

(4) **Land adjacent to a protected natural resource**. Any land area within 75 feet, measured horizontally, of the normal high water line of a great pond, river, stream or brook or the upland edge of a coastal wetland or freshwater wetland.

(5) **Public works project**. A federal, state or local government, or state-regulated utility project for public use or service including, but not limited to, highways, dams, bridges, utility lines, water lines, sewerage, and recreational facilities such as boat launch facilities.

(6) **Replacement**. Any activity that results in more than 50% of a structure being restored or reconstructed whether above or below the normal high water line.

(7) **Retaining wall**. A vertical or near vertical structure generally constructed of wood, concrete or rock or a combination of these materials and located at or below the normal high water line.

(8) **Riprap.** Heavy, irregularly-shaped rocks that are fit into place, without mortar, on a slope. Square or rectangular rocks with flat faces, such as quarry stone or manufactured blocks, do not qualify as "irregularly-shaped".

(9) **Structure**. Anything built for the support, shelter or enclosure of persons, animals, goods or property of any kind, together with anything constructed or erected with a fixed location on or in the ground. Examples of structures include buildings, utility lines and roads.

(10) **Non-native wetland plants**. Wetland grasses, forbs, shrubs, or trees not native to the State of Maine, for example, common reed (*Phragmites communis*) and purple loosestrife (*Lythrum salicaria*).

NOTES:

(1) Section 480-Q(15-A) of the NRPA exempts the installation, removal or repair of a septic system from permitting requirements as of March 1, 1995, as long as the system complies with all requirements of the subsurface wastewater disposal rules adopted by the Department of Human Services under 22 M.R.S.A. Section 42, subsection 3.

(2) Section 480-Q(2) of the NRPA exempts from permitting the maintenance and minor repair of structures in, on, over or adjacent to a protected natural resource and maintenance and minor repair of private crossings of a river, stream or brook provided:

(a) Erosion control measures are taken to prevent sedimentation of the water;

(b) The crossing does not block fish passage in the water course;

(c) There is not additional intrusion into the protected natural resources; and

(d) The dimensions of the repaired structure do not exceed the dimensions of the structure as it existed 24 months prior to the repair.

Section 480-Q(2) does not apply to the repair of more than 50% of a structure located in a coastal sand dune system; the repair of more than 50% of a dam, unless that repair has been approved by a representative of the United States Natural Resources Conservation Service; or the repair of

more than 50% of any other structure, unless the municipality in which the proposed activity is located requires a permit for the activity through an ordinance adopted pursuant to the mandatory shoreland zoning laws and the application for a permit is approved by the municipality.

(3) Section 480-Q(2-B) of the NRPA exempts from permitting the replacement of a floating dock with another floating dock if the dimensions of the replacement dock do not exceed those of the dock being replaced and the configuration of the replacement dock is the same as the dock being replaced.

(4) Section 480-Q(9) of the NRPA exempts from permitting emergency repair or normal maintenance and repair of existing public works which affect any protected natural resource. An activity which is exempt under this subsection shall employ erosion control measures to prevent sedimentation of any surface water, shall not block fish passage in any water course and shall not result in any additional intrusion of the public works into the protected natural resource. This exemption does to apply to any activity on an outstanding river segment as listed in section 480-P.

5. *[REPEALED]*

6. Movement of rocks or vegetation

A. Applicability

(1) This section applies to the limited movement of rocks or hand removal of vegetation from below the normal high water line of a great pond or river, stream or brook in order to provide access for swimming or navigation.

(2) This section does not apply to an activity that is not or will not be in compliance with the terms and conditions of permits issued under the Site Location of Development Law, 38 M.R.S.A. Sections 481 to 490, the Storm Water Management Law, 38 M.R.S.A. Section 420-D, the Natural Resources Protection Act, 38 M.R.S.A. Sections 480-A to 480-Z.

(3) This section does not apply to an activity that will not conform to the local shoreland zoning ordinance.

NOTE: Contact the local Code Enforcement Officer for information on local shoreland zoning requirements.

B. Submissions

(1) The applicant is required to submit photographs of the area which will be affected by the activity proposed.

(2) Photographs showing the completed project and the affected area must be submitted within 20 days of the activity's completion. The photographs must be sent with a copy of the notification form or labeled with the applicant's name and the town in which the activity took place.

C. Standards

(1) The width of the area to be cleared may not exceed 10 feet, as measured parallel to the shore. Only one area may be cleared per lot with shore frontage or area under common ownership with shore frontage.

(2) If the area has been cleared in the past, subsequent clearing must be limited to the same area.

(3) Rocks moved from the cleared area must remain in the water and must be distributed randomly in such a way that a structure such as a jetty or boat ramp will not be formed. Rocks may not be removed from the water.

(4) Wheeled or tracked equipment may not be operated in the water. For large rock movement, equipment operating on the shore may reach into the water with a bucket or similar extension provided no bottom sediments are removed or displaced. Areas that are disturbed as part of equipment access and operation must be restored to their original grade and vegetation or as near thereto as practicable.

(5) Rocks that are holding the shoreline may not be moved.

(6) Cut or uprooted vegetation must be removed from the water.

(7) Work must be done during periods of low water level or flow.

7. Outfall pipes

A. Applicability

(1) This section applies to the installation and maintenance of a permanent outfall pipe, an outlet from a ditch or drain tile for storm water, ground water or other discharges licensed by the DEP in or on land adjacent to a coastal wetland, freshwater wetland, great pond, river, stream or brook.

NOTES:

(1) A wastewater discharge license from the DEP is required for any discharge from an the outlet other than stormwater from residential development; small commercial or industrial facilities; or uncontaminated groundwater.

(2) A permit will be required from the US Army Corps of Engineers for the following types of projects:

(a) Any activity involving open trench excavation in a waterbody or wetland;

(b) Any activity in coastal waterways;

(c) Any activity within a river, stream or brook between October 2 and July 14; or

(d) Any activity involving work in waterways designated as Essential Fish Habitat for Atlantic salmon including all aquatic habitats in the watersheds of the following rivers and streams, including all tributaries to the extent that they are currently or were

historically accessible for salmon migration: St. Croix, Boyden, Dennys, Hobart Stream, Aroostook, East Machias, Machias, Pleasant, Narraguagus, Tunk Stream, Patten Stream, Orland, Penobscot, Passagassawaukeag, Union, Ducktrap, Sheepscot, Kennebec, Androscoggin, Presumpscot, and Saco River.

A copy of the PBR notification and original photographs, not photocopies, should be submitted to the Corps of Engineers for these activities (US Army Corps of Engineers, 675 Western Avenue, Suite #3, Manchester, ME 04351. Tel. (207) 623-8367).

---

(2) This section does not apply to an activity that is not or will not be in compliance with the terms and conditions of permits issued under the Site Location of Development Law, 38 M.R.S.A. Sections 481 to 490, the Storm Water Management Law, 38 M.R.S.A. Section 420-D, or the Natural Resources Protection Act, 38 M.R.S.A. Sections 480-A to 480-Z.

(3) This section does not apply to an activity that will not conform to the local shoreland zoning ordinance.

NOTE: Contact the local Code Enforcement Officer for information on local shoreland zoning requirements.

B. Submissions

(1) For an activity occurring in tidal waters, notice of approval of the timing of the activity from the Department of Marine Resources must be submitted to the DEP with the notification form.

(2) The applicant is required to submit photographs of the area which will be affected by the activity proposed.

(3) Photographs showing the completed project and the affected area must be submitted within 20 days of the activity's completion. The photographs must be sent with a copy of the notification form or labeled with the applicant's name and the town in which the activity took place.

C. Standards

(1) The following measures must be taken to prevent erosion of soil or fill material from the disturbed areas into the resource:

(a) Staked hay bales or silt fence must be properly installed between the area of soil disturbance and the edge of the resource before the activity begins;

(b) Hay bales or silt fence barriers must be maintained until the disturbed area is permanently stabilized;

(c) Within 7 calendar days following the completion of any soil disturbance, and prior to any storm event, mulch must be spread on any exposed soils;

(d) All disturbed soils must be permanently stabilized; and

(e) Within 30 days of final stabilization of the site, any silt fence must be removed.

NOTE: For guidance on erosion and sedimentation control consult the Maine Erosion and Sediment Control BMPs, dated March 2003. This handbook and other references are available from the DEP.

---

(2) Stormwater outfalls, whether a pipe or trench, must utilize velocity reducing structures and/or rock aprons to prevent erosion. A vegetative filter strip of at least 25 feet long must be established and maintained between the outfall structure and the resource unless a different standard is required pursuant to the Site Location of Development Law, 38 M.R.S.A. Sections 481 to 490, or the Storm Water Management Law, 38 M.R.S.A. Section 420-D. The DEP may approve a reduction in width of the vegetated buffer if:

(a) The applicant demonstrates in writing that the full buffer width is not practicable;

(b) Any recommendations from the DEP are incorporated into the activity; and

(c) Approval of the reduction is from the DEP in writing.

(3) Foundation drains and licensed discharges may extend to, and outfall in, the resource. If necessary, a rock apron must be constructed to prevent erosion.

(4) Disturbance of wetland vegetation must be avoided if possible. If wetland vegetation must be disturbed during the activity, it must be reestablished immediately upon completion of the activity and must be maintained.

(5) Non-native wetland plants may not be planted in disturbed areas.

(6) The trench width in any protected natural resource must be no wider than necessary to install the device.

(7) The trench in and adjacent to the protected natural resource must be refilled with the material that was excavated. The original grading and elevation of the wetland must be restored. Residual fill material must be removed from the wetland or water body and properly stabilized. Pipe bedding material such as crushed stone or sand may be used provided clay dams or synthetic boots are used where appropriate to prevent wetland draining through the bedding material.

(8) Blasting in inundated areas is prohibited.

(9) The outfall structure may not interfere with any potential boat usage of the project site.

(10) Wheeled or tracked equipment may not operate in the water. Equipment operating on the shore may reach into the water with a bucket or similar extension. Equipment may cross streams on rock, gravel or ledge bottom.

(11) All wheeled or tracked equipment that must travel or work in a vegetated wetland area must travel and work on mats or platforms in order to protect wetland vegetation.

(12) Work below the high water line of a great pond, river, stream or brook must be done at low water except as required for emergency flood control work. Measures, such as a silt boom or staked fencing, must be employed to reduce and isolate turbidity.

(13) Maintenance clearing of deposited debris and sediments from the outfall area is allowed provided the cleared materials are removed from the resource. Any debris generated during the activity must be prevented from washing downstream and must be removed from the wetland or water body. Disposal of debris must be in conformance with Maine Hazardous Waste, Septage and Solid Waste Management Act, 38 M.R.S.A. Section 1301 *et seq.*

(14) Uncured concrete may not be placed directly into the water. Concrete must be pre-cast and cured at least three weeks before placing in the water, or where necessary, must be placed in forms and cured at least one week before the forms are removed. No washing of tools, forms, etc. may occur in or adjacent to the waterbody or wetland.

(15) If work is performed in a river, stream or brook that is less than three feet deep at the time of the activity and at the location of the activity, the applicant must provide for temporary diversion of flow to the opposite side of the channel while work is in progress.

(a) Diversion may be accomplished by placing sandbags, timbers, sheet steel, concrete blocks, 6+ mil polyethylene or geotextiles from the bank to midstream on the upstream side of the activity. No more than two-thirds (2/3) or 25 feet of stream width, whichever is less, may be diverted at one time.

(b) Any material used to divert water flow must be completely removed upon completion of the activity, and the stream substrate must be restored to its original condition.

(c) A pump may be operated, where necessary, for a temporary diversion. The pump outlet must be located and operated such that erosion or the discharge of sediment to the water is prevented.

(16) If the activity occurs within tidal waters, the activity must occur during the time period approved by the Department of Marine Resources.

D. Definitions. The following terms, as used in this chapter, have the following meanings, unless the context indicates otherwise:

(1) **Diversion**. A rerouting of a river, stream or brook to a location outside of its established channel.

(2) **Dredge**. To move or remove, by digging, scooping, or suctioning any sand, silt, mud, gravel, rock, or other material from the bottom of a water body or wetland surface.

(3) **Fill**. a. (verb) To put into or upon, supply to, or allow to enter a water body or wetland any earth, rock, gravel, sand, silt, clay, peat, or debris; b. (noun) Material, other than structures, placed in or adjacent to a water body or wetland.

(4) **Land adjacent to a protected natural resource**. Any land area within 75 feet, measured horizontally, of the normal high water line of a great pond, river, stream or brook or the upland edge of a coastal wetland or freshwater wetland.

(5) **Non-native wetland plants**. Wetland grasses, forbs, shrubs, or trees not native to the State of Maine, for example, common reed (*Phragmites communis*) and purple loosestrife (*Lythrum salicaria*).

8. Shoreline stabilization

A. Applicability

(1) This section applies to the establishment of vegetation adjacent to any protected natural resource and the installation of riprap along the shoreline of a great pond, freshwater wetland with over 20,000 square feet of open water, stream or brook.

(2) This section applies only to areas where erosion exists and vegetation is not present, as demonstrated by photographs submitted with the notification form.

(3) This section does not apply to riprap on any river as defined by 38 M.R.S.A. Section 436-A(11), the Mandatory Shoreland Zoning Act (information is available at the Town Office).

(4) This section does not apply to a riprap project that affects more than 100 feet of shoreline.

(5) This section does not apply to areas within any portion of a coastal sand dune system even if portions of these systems extend into the coastal wetland.

(6) This section does not apply to an activity that will not conform to the local shoreland zoning ordinance.

NOTES:

(1) Contact the local Code Enforcement Officer for information on local shoreland zoning requirements.

(2) A permit will be required from the US Army Corps of Engineers for riprap projects that include fill below the ordinary high water line of fresh waters or below the spring high tide line of tidal waters.

A copy of the PBR notification form and original photographs, not photocopies, should be submitted to the Corps of Engineers for these activities (US Army Corps of Engineers, 675 Western Avenue, Suite #3, Manchester, ME 04351. Tel. (207) 623-8367).

B. Submissions

(1) The applicant is required to submit photographs of the entire shoreline area where this activity is proposed.

(2) Photographs showing the finished activity must be submitted within 20 days of the activity's completion. The photographs must be sent with a copy of the notification form or labeled

with the applicant's name and the town in which the activity took place.

(3) A scaled drawing, including a cross section, of the proposed riprap installation. The drawing must clearly depict the extent of riprap proposed to be installed, such as the length along shore and height above the normal high water line.

It is not necessary to have the plan professionally prepared. However, it must be legible and drawn to a scale that provides a clear representation of distances and measurements on the plan.

(4) Professional design plans for riprap on streams and brooks when required pursuant to paragraph C(12) of this section.

C. Standards

(1) Riprap may be utilized only where eroded slopes exceed 3 horizontal feet to 1 vertical foot (approximately 33% slope), or where riprap is used to stabilize an existing stormwater outfall. Where eroded slopes are shallower than 3 horizontal to 1 vertical, vegetation must be used to control erosion.

(2) Riprap installed on the shoreline of a great pond or open water wetland may not extend higher than 2 feet above the normal high water line. Riprap installed on a river, stream or brook may not extend higher than 2 feet above the normal high water line, or to the elevation of the 100-year flood where mapped by the Federal Emergency Management Agency, whichever is higher.

(3) The following measures must be taken to prevent erosion of soil or fill material from disturbed areas into the resource:

(a) Staked hay bales or silt fence must be properly installed between the area of soil disturbance and the resource before the activity begins;

(b) Hay bales or silt fence barriers must be maintained until the disturbed area is permanently stabilized;

(c) Within 7 calendar days following the completion of any soil disturbance, and prior to any storm event, mulch must be spread on any exposed soils;

(d) All disturbed soils must be permanently stabilized; and

(e) Within 30 days of final stabilization of the site, any silt fence must be removed.

NOTE: For guidance on erosion and sedimentation controls, consult the Maine Erosion and Sediment Control BMPs, dated March 2003. This handbook and other references are available from the DEP.

(4) New soil may be brought to the site and soil amendments, such as fertilizer or lime, may be used to increase soil fertility provided:

(a) Slopes do not exceed 3 horizontal to 1 vertical;

(b) Existing vegetation is not permanently removed;

(c) Water bars or diversions are used to divert stormwater runoff away from the loam;

(d) Depth of new soil is less than 2 inches;

(e) The amendment is worked into the underlying soils;

(f) Disturbed areas are immediately mulched and seeded; and

(g) Final vegetation consists of native trees and shrubs, or matches existing vegetation immediately adjacent to the treated area.

(5) Rocks used for riprap may not be obtained from the shoreline (because they help prevent erosion) or below the normal high water line (because they provide habitat for aquatic life).

NOTE: On many slopes, slumping is caused by wave or water motion undercutting the bank. If riprap is placed only at the bottom of the slope, and the upper portions of the bank are graded and revegetated, the cost of the shoreline stabilization project can be reduced.

(6) The slope of the riprap may not be steeper than 1 horizontal to 1 vertical, nor shallower than 3 horizontal to 1 vertical.

(7) Riprap must be anchored at the base of the existing bank by placing the bottom row of rock in a trench excavated at least to a depth equal to the height of the largest rock, or the riprap must be pinned to underlying ledge.

(8) A layer of filter fabric and crushed stone must be placed under the riprap to prevent the washing of soil particles into the water.

(9) No fill material other than the riprap and crushed stone may be placed below the normal high water line.

(10) Riprap may not be placed in front of a retaining wall such that it extends further into the water.

(11) A buffer strip of undisturbed vegetation at least 25 feet wide must be established and maintained along the upland edge of any riprap placed for the protection of agricultural land.

(12) Design of riprap on stream or brook banks must be approved by either a Maine Registered Professional Engineer, the United States Natural Resources Conservation Service, or the local Soil and Water Conservation District. Evidence of this approval or plans stamped by a professional engineer must be submitted along with the Notification Form. With prior written agreement, the DEP may waive this standard for minor riprap activities on small streams.

(13) When riprap is necessary along a river, stream or brook, it must be combined with tree and shrub plantings to provide bank stabilization, shading of the water and cover for wildlife.

(14) If work is performed in a river, stream or brook that is less than three feet deep at the time of the activity and at the location of the activity, the applicant must provide for temporary diversion of flow to the opposite side of the channel while work is in progress.

(a) Diversion may be accomplished by placing sandbags, timbers, sheet steel, concrete blocks, 6+ mil polyethylene or geotextiles from the bank to midstream on the upstream side of the activity. No more than two-thirds (2/3) or 25 feet of stream width, whichever is less, may be diverted at one time.

(b) Any material used to divert water flow must be completely removed upon completion of the activity, and the stream substrate must be restored to its original condition.

(c) A pump may be operated, where necessary, for a temporary diversion. The pump outlet shall be located and operated such that erosion or the discharge of sediment to the water is prevented.

(15) Wheeled or tracked equipment may not operate in the water. Equipment operating on the shore may reach into the water with a bucket or similar extension. Equipment may cross streams on rock, gravel or ledge bottom.

(16) Work below the high water line of a great pond, river, stream or brook must be done at low water except as required for emergency flood control work.

(17) All excavated material must be stockpiled either outside the protected natural resource or on mats or platforms. Hay bales or silt fence must be used, where necessary, to prevent sedimentation. All excavated material must be removed to a location more than 75 feet from the protected natural resource, unless otherwise approved by the DEP, and properly stabilized with vegetation upon project completion.

(18) Disturbance of vegetation must be avoided if possible. If vegetation must be disturbed during the activity, similar types and amounts of vegetation must be re-established immediately upon completion of the activity and must be maintained.

(19) Non-native species may not be planted in disturbed areas.

(20)Riprap projects must be constructed in accordance with the plans or drawings submitted pursuant to subsections B(3) and (4) of this section, as applicable.

D. Definitions. The following terms, as used in this chapter, have the following meanings, unless the context indicates otherwise:

(1) **Fill**. a. (verb) To put into or upon, supply to, or allow to enter a water body or wetland any earth, rock, gravel, sand, silt, clay, peat, or debris; b. (noun) Material, other than structures, placed in or adjacent to a water body or wetland.

(2) **Riprap.** Heavy, irregularly-shaped rocks that are fit into place, without mortar, on a slope. Square or rectangular rocks with flat faces, such as quarry stone or manufactured blocks, do not qualify as “irregularly-shaped”.

(3) **Structure**. Anything built for the support, shelter or enclosure of persons, animals, goods or property of any kind, together with anything constructed or erected with a fixed location on or in the ground. Examples of structures include buildings, utility lines and roads.

9. Crossings (utility lines, pipes and cables)

A. Applicability

(1) This section applies to the installation, maintenance and replacement of an overhead utility line across a river, stream or brook excluding outstanding river segments identified in 38 M.R.S.A. Section 480-P.

(2) This section applies to the installation, maintenance and replacement of a submerged utility line across a coastal wetland, freshwater wetland, great pond, river, stream, or brook excluding outstanding river segments identified in 38 M.R.S.A. Section 480-P.

(3) This section applies to the installation, maintenance and replacement of an overhead utility line across or adjacent to a coastal wetland, freshwater wetland or great pond provided the line is within the right-of-way of, or adjacent to the path of, an existing traveled way.

(4) This section does not apply to a submerged utility crossing that is part of a larger project involving multiple crossings of a natural resource or more than one natural resource. Projects consisting of multiple natural resource crossings must obtain an individual permit under the Natural Resources Protection Act.

(5) This section does not apply to an activity that is not or will not be in compliance with the terms and conditions of permits issued under the Site Location of Development Law, 38 M.R.S.A. Sections 481 to 490, the Storm Water Management Law, 38 M.R.S.A. Section 420-D, or the Natural Resources Protection Act, 38 M.R.S.A. Sections 480-A to 480-Z.

(6) This section does not apply to an activity that will not conform to the local shoreland zoning ordinance.

NOTES:

(1) Contact the local Code Enforcement Officer for information on local shoreland zoning requirements.

(2) In a great pond, the placement of water lines to serve a single-family house or the installation of cables for utilities, such as telephone and power cables, is exempt from NRPA permit requirements under 38 M.R.S.A. Section 480-Q (1) provided that the:

(a) Excavated trench for access to the water is backfilled and riprapped to prevent erosion;

(b) Excavated trench on the landward side of the riprapped area is seeded and mulched to prevent erosion; and

(c) Bureau of Parks and Lands has approved the placement of the cable across the bottom of the great pond to the extent that it has jurisdiction.

(3) Approval for crossing any state-owned (submerged) land must be obtained from the Department of Conservation, Bureau of Parks and Lands, State House Station 22, Augusta, ME 04333.

(4) A permit will be required from the US Army Corps of Engineers for the following types of projects:

(a) Any activity involving open trench excavation in a waterbody or where the impact (direct and indirect) to wetlands exceeds 4,300 square feet;

(b) Any activity in coastal waterways;

(c) Any activity within a river, stream or brook between October 2 and July 14 ;or

(d) Any activity involving work in waterways designated as Essential Fish Habitat for Atlantic salmon including all aquatic habitats in the watersheds of the following rivers and streams, including all tributaries to the extent that they are currently or were historically accessible for salmon migration: St. Croix, Boyden, Dennys, Hobart Stream, Aroostook, East Machias, Machias, Pleasant, Narraguagus, Tunk Stream, Patten Stream, Orland, Penobscot, Passagassawaukeag, Union, Ducktrap, Sheepscot, Kennebec, Androscoggin, Presumpscot, and Saco River.

A copy of the PBR notification and original photographs, not photocopies, should be submitted to the Corps of Engineers for these activities (US Army Corps of Engineers, 675 Western Avenue, Suite #3, Manchester, ME 04351. Tel. (207) 623-8367).

B. Submissions

(1) The applicant is required to submit photographs of the area which will be affected by the activity proposed.

(2) Photographs showing the completed project and the affected area must be submitted within 20 days of the activity's completion. The photographs must be sent with a copy of the notification form or labeled with the applicant's name and the town in which the activity took place.

(3) For any work involving trenching or disturbance of substrate in a coastal wetland, great pond, river, stream or brook that occurs between October 2 and July 14, notice of approval of the timing of the activity from the Department of Inland Fisheries and Wildlife, the Atlantic Salmon Authority and the Department of Marine Resources must be submitted to the DEP with the notification form, unless otherwise approved by the DEP based upon the location of the project. In addition, for a utility crossing of marine or estuarine waters at any time of year, notice of approval of the timing from the Department of Marine Resources must be submitted to the DEP with the notification form.

C. Standards

(1) The following measures must be taken to prevent erosion of soil or fill material from disturbed areas into the resource:

(a) Staked hay bales or silt fence must be properly installed between the area of soil disturbance and the resource before the activity begins;

(b) Hay bales or silt fence barriers must be maintained until the disturbed area is permanently stabilized;

(c) Within 7 calendar days following the completion of any soil disturbance, and prior to any storm event, mulch must be spread on any exposed soils;

(d) All disturbed soils must be permanently stabilized; and

(e) Within 30 days of final stabilization of the site, any silt fence must be removed.

NOTE: For guidance on erosion and sedimentation controls, consult the Maine Erosion and Sediment Control BMPs, dated March 2003. This handbook and other references are available from the DEP.

---

(2) Disturbance of wetland vegetation must be avoided if possible. If wetland vegetation must be disturbed during the activity, it must be reestablished immediately upon completion of the activity and must be maintained.

(3) Non-native wetland plants may not be planted in disturbed areas.

(4) If the activity occurs in a coastal wetland, great pond, river, stream or brook between October 2 and July 14, the activity must occur during the time period approved by the Department of Inland Fisheries and Wildlife, the Atlantic Salmon Authority and the Department of Marine Resources.

(5) The trench in and adjacent to the wetland must be refilled with the material that was excavated. The original grading and elevation of the wetland must be restored. Residual fill material must be removed from the wetland or water body and properly stabilized. Pipe bedding material such as crushed stone or sand may be used provided clay dams or synthetic boots are used where appropriate to prevent wetland draining through the bedding material.

(6) Any trench excavation that occurs within a river, stream or brook must be performed either during a period when no water is flowing, or utilize a dry crossing method such as diverting water flow by coffer dam and pumping around the area of excavation. The trench width in any natural resource must be no wider than necessary to install the device.

(7) The crossing may not obstruct any recreational usage of the water body.

(8) Wheeled or tracked equipment may not operate in the water. Equipment operating on the shore may reach into the water with a bucket or similar extension. Equipment may cross streams on rock, gravel or ledge bottom.

(9) All wheeled or tracked equipment that must travel or work in a vegetated wetland must travel and work on mats or platforms in order to protect wetland vegetation.

(10) Any debris or excavated material must be stockpiled either outside the wetland or on mats or platforms. Hay bales or silt fence must be used, where necessary, to prevent sedimentation.

(11) Any debris generated during the activity must be prevented from washing downstream and must be removed from the wetland or water body. Disposal of debris must be in conformance with Maine Hazardous Waste, Septage and Solid Waste Management Act, 38 M.R.S.A. Section 1301 *et seq.*

(12) Temporary roads constructed of fill are not allowed in the resource except that fill may be used on top of mats or platforms for equipment access.

(13) The use of untreated lumber is preferred. Lumber pressure treated with chromated copper arsenate (CCA) may be used only if necessary and only if use is allowed under federal law and not prohibited from sale under 38 M.R.S.A. 1682, and provided it is cured on dry land in such a manner to expose all surfaces to the air for a period of at least 21 days prior to construction. Wood treated with creosote or pentachlorophenol must not be used where the wood will come in contact with water.

(14) Blasting in inundated areas is prohibited.

D. Definitions. The following terms, as used in this chapter, have the following meanings, unless the context indicates otherwise:

(1) **Crossing**. Any activity extending from one side to the opposite side of a protected natural resource, or to an island or upland within a protected natural resource whether under, through or over that resource. Such activities include, but are not limited to roads, fords, bridges, culverts, utility lines, water lines, sewer lines and cables, and the clearing and removal of vegetation necessary to install and maintain these crossings.

(2) **Fill**. a. (verb) To put into or upon, supply to, or allow to enter a water body or wetland any earth, rock, gravel, sand, silt, clay, peat, or debris; b. (noun) Material, other than structures, placed in or adjacent to a water body or wetland.

(3) **Land adjacent to a protected natural resource**. Any land area within 75 feet, measured horizontally, of the normal high water line of a great pond, river, stream or brook or the upland edge of a coastal wetland or freshwater wetland.

(4) **Riprap.** Heavy, irregularly-shaped rocks that are fit into place, without mortar, on a slope. Square or rectangular rocks with flat faces, such as quarry stone or manufactured blocks, do not qualify as “irregularly-shaped”.

(5) **Structure**. Anything built for the support, shelter or enclosure of persons, animals, goods or property of any kind, together with anything constructed or erected with a fixed location on or in the ground. Examples of structures include buildings, utility lines and roads.

(6) **Utility lines, pipes and cables**. Wires and pipes providing utility services. The term includes telephone and electric wires, gas, oil, water and sewer pipelines, and their support structures, whether public or private.

(7) **Non-native wetland plants**. Wetland grasses, forbs, shrubs, or trees not native to the State of Maine, for example, common reed (*Phragmites communis*) and purple loosestrife (*Lythrum salicaria*).

10. Stream crossings (bridges, culverts and fords)

A. Applicability

(1) This section applies to the construction of a bridge span or culvert crossing of a river, stream or brook, and associated accessway construction within 25 feet of the river, stream or brook crossing excluding the following:

(a) Crossings of outstanding river segments identified in 38 M.R.S.A. Section 480-P;

(b) Crossings of any river as defined by 38 M.R.S.A. Section 436-A(11), the Mandatory Shoreland Zoning Act (information is available at the Town Office); or

(c) Crossings of any portion of a river, stream or brook that experiences tidal action.

NOTE: Temporary structures do not require a permit from the department under the Natural Resources Protection Act (NRPA) provided no filling and minimal soil disturbance occurs. All crossings involving filling in and adjacent to a river, stream or brook, such as culvert crossings, are subject to the NRPA and must first receive a permit before construction.

(2) This section also applies to the establishment of a permanent stream ford for purposes of timber harvesting, livestock, agriculture and construction and maintenance of a utility line.

(3) A stream crossing constructed between July 15 and October 1 that is associated with forest management activities is exempt from the 14 day waiting period required in Section 1(C)(1).

(4) A stream crossing constructed between July 15 and October 1 that is performed or supervised by individuals currently certified in erosion control practices by the DEP is exempt from the 14 day waiting period required in Section 1(C)(1).

(5) Multiple stream crossings may be submitted on one PBR notification form as long as all of the crossing activities are located within one town.

(6) This section does not apply to an activity that is not or will not be in compliance with the terms and conditions of permits issued under the Site Location of Development Law, 38 M.R.S.A. Sections 481 to 490, the Storm Water Management Law, 38 M.R.S.A. Section 420-D, or the Natural Resources Protection Act, 38 M.R.S.A. Sections 480-A to 480-Z.

(7) This section does not apply to an activity that will not conform to the local shoreland zoning ordinance.

NOTES:

(1) Contact the local Code Enforcement Officer for information on local shoreland zoning requirements.

(2) Maintenance and repair of a public or private crossing of a river, stream or brook is exempt from the NRPA provided that:

(a) Erosion control measures are taken to prevent sedimentation of the water;

(b) The crossing does not block fish passage in the water course; and

(c) Any replaced culvert is not more than 25% longer than the culvert being replaced and is not longer than 75 feet.

(3) A permit will be required from the US Army Corps of Engineers for the following types of projects:

(a) Any activity involving impacts (direct and secondary) to freshwater wetlands; or

(b) An activity within a river, stream or brook between October 2 and July 14.

A copy of the PBR notification form and original photographs, not photocopies, should be submitted to the Corps of Engineers for these activities (US Army Corps of Engineers, 675 Western Avenue, Suite #3, Manchester, ME 04351. Tel. (207) 623-8367).

B. Submissions

(1) For any crossing involving trenching or disturbance of substrate in a river, stream or brook that occurs between October 2 and July 14, the proposed dates for construction of the crossing must be clearly identified on the notification form under “Description of Project”.

(2) Except for crossings associated with forest management activities, the applicant is required to submit photographs of the area that will be affected by the activity proposed.

(3) Photographs showing the completed project and the affected area must be submitted within 20 days of the activity's completion. The photographs must be sent with a copy of the notification form or labeled with the applicant's name and the town in which the activity took place.

C. Standards

(1) The following measures must be taken to prevent erosion of soil or fill material from disturbed areas into the resource:

(a) Staked hay bales or silt fence must be properly installed between the area of soil disturbance and the resource before the activity begins;

(b) Hay bales or silt fence barriers must be maintained until the disturbed area is permanently stabilized;

(c) Within 7 calendar days following the completion of any soil disturbance, and prior to any storm event, mulch must be spread on any exposed soils;

(d) All disturbed soils must be permanently stabilized; and

(e) Within 30 days of final stabilization of the site, any silt fence must be removed.

NOTE: For guidance on erosion and sedimentation controls, consult the Maine Erosion and Sediment Control BMPs, dated March 2003. This handbook and other references are available from the DEP.

---

(2) If a perennial watercourse to be crossed is used for navigation, the crossing must consist of a bridge span or pipe arch with at least 4 feet of clearance during normal high water for boat traffic.

(3) If the stream to be crossed is a perennial watercourse and has a slope of more than 2%, a bridge or a pipe arch must be used to maintain the natural streambed.

(4) Fill sideslopes in a stream or floodplain wetland must be maintained at a slope no shallower than 3 horizontal to 1 vertical and no steeper than 1.5 horizontal to 1 vertical. Fill sideslopes must be stabilized at the completion of the activity.

NOTE: Uncompacted soils or sandy soils that are saturated at the toe of a slope will be unstable at a 1.5 to 1 slope.

---

(5) A bridge or culvert must provide an opening with a cross-sectional area at least equal to 3 times the cross-sectional area of the stream channel or sufficient in size to accommodate 25-year frequency water flows.

NOTE: Stream crossings allowable under this section but located in flood hazard areas (i.e. A zones) as identified on a community's Flood Insurance Rate Maps (FIRM) or Flood Hazard Boundary Maps (FHBM) must be designed and constructed under the stricter standards contained in that community's National Flood Insurance Program (NFIP). For example, a crossing may be required to pass a 100-year flood event.

---

(6) Road surfaces must be constructed in a manner to prevent erosion of material into the river, stream or brook.

(7) Surface water on or adjacent to crossing approaches must be diverted through vegetative filter areas at least 25 feet long to avoid sedimentation of the watercourse. Roadside ditches may not extend to the resource being crossed.

NOTE: Surface water on or adjacent to crossing approaches should be diverted through vegetative filter areas to avoid sedimentation of the watercourse. Because roadside ditches may not extend to the resource being crossed, filter areas should be established in accordance with the following tables:

Average slope of land between exposed mineral soil and normal high water mark (percent)	Width of strip between ditch terminus and normal high water mark (feet along surface of the ground)
0	25
10	45
20	65
30	85
40	105
50	125
60	145
70	165

(8) A stream ford must be lined with crushed stone, blasted ledge, washed stone, gabion blankets or geotextile material for erosion control when the natural stream bed does not consist of ledge or rock.

(9) A stream ford must allow for fish passage at all times of the year and may not impound water. The fords must also allow for maintenance of normal stream flows.

(10) Culvert crossings must:

(a) Be limited to 75 feet in length. This limit may not be exceeded within a half-mile length of the stream or within the length of stream controlled by the applicant, if less;

(b) Follow the alignment and grade of the existing stream channel where possible. On perennial streams the culvert's gradient may not exceed 1%;

(c) Have the bottom of the entire culvert installed at or below stream bed elevation, except for additional culverts at the same crossing;

(d) Where two or more culverts are installed, be offset in order to concentrate low flows into the culvert within the natural channel;

(e) Be seated on firm ground, or on geotextiles, logs or other materials used to stabilize the ground;

(f) Be covered by soil to a minimum depth of 1 foot or according to the culvert manufacturer's specifications, whichever is greater;

(g) Have the soil compacted at least halfway up the side of the culvert; and

(h) Have the inlet and outlet ends stabilized by riprap in accordance with Section 8 Shoreline stabilization standards to avoid erosion of material around the culvert.

NOTE: For guidance on riprap installation, consult the Maine Erosion and Sediment Control BMPs, dated March 2003. This handbook and other references are available from the DEP.

(11) Wheeled or tracked equipment may not operate in the water. Equipment operating on the shore may, where necessary, reach into the water with a bucket or similar extension. Equipment may cross streams on rock, gravel or ledge bottom.

(12) Work below the normal high water line must be done during periods of low water level or flow.

(13) If the crossing involves trenching or disturbance of substrate in a river, stream or brook between October 2 and July 14, the activity must occur during the time period approved by the DEP. The approved time period may be the time period proposed by the applicant or an alternative time period approved by the DEP. An alternative time period will be required where it appears an unreasonable impact on water quality or fisheries may result at the point of crossing or immediately downstream of the crossing. The applicant will be notified by the DEP within 14 days if an alternative time period, other than the one proposed by the applicant, is required for constructing the crossing.

(14) If work is performed in a river, stream or brook that is less than three feet deep at the time of the activity and at the location of the activity, the applicant must provide for temporary diversion of flow to the opposite side of the channel while work is in progress.

(a) Diversion may be accomplished by placing sandbags, timbers, sheet steel, concrete blocks, 6+ mil polyethylene or geotextiles from the bank to midstream on the upstream side of the activity. No more than two-thirds (2/3) or 25 feet of stream width, whichever is less, may be diverted at one time.

(b) Any material used to divert water flow must be completely removed upon completion of the activity, and the stream substrate must be restored to its original condition.

(c) A pump may be operated, where necessary, for a temporary diversion. The pump outlet must be located and operated such that erosion or the discharge of sediment to the water is prevented.

(15) All wheeled or tracked equipment that must travel or work in a vegetated wetland area must travel and work on mats or platforms in order to protect wetland vegetation.

(16) All excavated material must be stockpiled either outside the wetland or on mats or platforms. Hay bales or silt fence must be used, where necessary, to prevent sedimentation.

(17) The use of untreated lumber is preferred. Lumber pressure treated with chromated copper arsenate (CCA) may be used only if necessary and only if use is allowed under federal law and not prohibited from sale under 38 M.R.S.A. 1682, and provided it is cured on dry land in a way that exposes all surfaces to the air for a period of at least 21 days prior to construction. Wood treated with creosote or pentachlorophenol may not be used where it will contact water.

D. Definitions. The following terms, as used in this chapter, have the following meanings, unless the context indicates otherwise:

(1) **Cross-sectional area**. The cross-sectional area of a stream channel is determined by multiplying the stream channel width by the average stream channel depth. The stream channel width is the straight line distance from the normal high water line on one side of the channel to the normal high water line on the opposite side of the channel. The average stream channel depth is the average of the vertical distances from a straight line between the normal high water marks of the stream channel to the bottom of the channel.

(2) **Crossing**. Any activity extending from one side to the opposite side of a protected natural resource, or to an island or upland within a protected natural resource whether under, through or over that resource. Such activities include, but are not limited to roads, fords, bridges, culverts, utility lines, water lines, sewer lines and cables, and the clearing and removal of vegetation necessary to install and maintain these crossings.

(3) **Fill**. a. (verb) To put into or upon, supply to, or allow to enter a water body or wetland any earth, rock, gravel, sand, silt, clay, peat, or debris; b. (noun) Material, other than structures, placed in or adjacent to a water body or wetland.

(4) **Ford**. A permanent crossing of a stream utilizing an area of existing, non-erodible substrate of the stream, such as ledge or cobble, or by placing non-erodible material such as stone or geotextile on the stream bottom.

(5) **Perennial watercourse**. A river, stream or brook depicted as a solid line on the most recent edition of a United States Geological Survey 7.5 minute series topographic map, or if not available, a 15 minute series topographic map.

(6) **Riprap.** Heavy, irregularly-shaped rocks that are fit into place, without mortar, on a slope. Square or rectangular rocks with flat faces, such as quarry stone or manufactured blocks, do not qualify as “irregularly-shaped”.

(7) **Used for navigation**. Those rivers, streams or brooks used by motorized watercraft.

11. State transportation facilities

A. Applicability

(1) This section applies to the maintenance, repair, reconstruction, rehabilitation, replacement or minor construction of a State Transportation Facility carried out by, or under the authority of, the Maine Department of Transportation (MaineDOT) or the Maine Turnpike Authority, including any testing or preconstruction engineering, and associated technical support services.

(2) This section does not apply to an activity within a coastal sand dune system.

NOTE: The construction of a transportation facility other than roads and associated facilities may be subject to the Storm Water Management Law, 38 M.R.S.A. Section 420-D.

B. Standards

(1) Photographs of the area to be altered by the activity must be taken before work on the site begins. The photographs must be kept on file and be made available at the request of the DEP.

(2) The activity must be reviewed by the Department of Inland Fisheries and Wildlife and the Department of Marine Resources, as applicable. The applicant must coordinate with the reviewing agencies and incorporate any recommendations from those agencies into the performance of the activity.

(3) All construction activities undertaken must be detailed in a site-specific Soil Erosion and Water Pollution Control Plan and conducted in accordance with MaineDOT's Best Management Practices for Erosion and Sediment Control, dated January 2000, and Standard Specifications, dated December 2002.

(4) Alignment changes may not exceed a distance of 200 feet between the old and new center lines in any natural resource.

(5) The activity may not alter more than 300 feet of shoreline (both shores added together) within a mile stretch of any river, stream or brook, including any bridge width or length of culvert.

(6) The activity may not alter more than 150 feet of shoreline (both shores added together) within a mile stretch of any outstanding river segment identified in 38 M.R.S.A. 480-P, including any bridge width or length of culvert.

(7) The activity must minimize wetland intrusion. The activity is exempt from the provisions of Chapter 310, the Wetland and Waterbodies Protection Rules, if the activity alters less than 15,000 square feet of natural resources per mile of roadway (centerline measurement) provided that the following impacts are not exceeded within the 15,000 square foot area:

(a) 1,000 square feet of coastal wetland consisting of salt tolerant vegetation or shellfish habitat; or

(b) 5,000 square feet of coastal wetland not containing salt tolerant vegetation or shellfish habitat; or

(c) 1,000 square feet of a great pond.

All other activities must be performed in compliance with all sections of Chapter 310, the Wetland Protection Rules, except 310.2(C), 5(A), 9(A), 9(B) and 9(C).

(8) The activity may not permanently block any fish passage in any watercourse containing fish. The applicant must coordinate with the reviewing agencies listed in paragraph 2 above to improve fish passage and incorporate any recommendations from those agencies into the performance of the activity.

NOTE: For guidance on meeting the design objectives for fish passage, including peak flow, maximum velocity, mining depth and gradient, see the MaineDOT Waterbody and Wildlife Crossing Policy and Design Guide (July 2008), developed in conjunction with state and federal resource and regulatory agencies.

(9) Rocks may not be removed from below the normal high water line of any coastal wetland, freshwater wetland, great pond, river, stream or brook except to the minimum extent necessary for completion of work within the limits of construction.

(10) If work is performed in a river, stream or brook that is less than three feet deep at the time and location of the activity, the applicant must isolate the work area from the resource and divert stream flows around the work area, maintaining downstream flows while work is in progress.

(11) Wheeled or tracked equipment may not operate in the water. Equipment operating on the shore may reach into the water with a bucket or similar extension. Equipment may cross streams on rock, gravel or ledge bottom. If avoiding the operation of wheeled or tracked equipment in the water is not possible, the applicant must explain the need to operate in the water. Approval from the DEP to operate in the water must be in writing, and any recommendations from the DEP must be incorporated into the performance of the activity.

(12) All wheeled or tracked equipment that must travel or work in a vegetated wetland area must travel and work on mats or platforms.

(13) Any debris or excavated material must be stockpiled either outside the wetland or on mats or platforms. Erosion and sediment control best management practices must be used, where necessary, to prevent sedimentation. Any debris generated during the activity must be prevented from washing downstream and must be removed from the wetland or water body. Disposal of debris must be in conformance with the Maine Hazardous Waste, Septage and Solid Waste Management Act, 38 M.R.S.A. Section 1301 *et seq.*

(14) Work below the normal high water line of a great pond, river, stream or brook must be done at low water except for emergency work or work agreed to by the resource agencies listed in paragraph 2 above.

(15) Perimeter controls must be installed before the work starts. Disturbance of natural resources beyond the construction limits shown on the plans is not allowed under this rule.

NOTE: Guidance on the location of construction limits can be obtained from the on site Construction Manager.

(16) The use of untreated lumber is preferred. Lumber pressure treated with chromated copper arsenate (CCA) may be used only if necessary and only if use is allowed under federal law and not prohibited from sale under 38 M.R.S.A. 1682, and provided it is cured on dry land in a manner that exposes all surfaces to the air for a period of at least 21 days prior to construction. Wood treated with creosote or pentachlorophenol may not be used where it will contact water.

(17) A temporary road for equipment access must be constructed of crushed stone, blasted ledge, or similar materials that will not cause sedimentation or restrict fish passage. Such roads must be completely removed at the completion of the activity. In addition, any such temporary roads which are in rivers, streams or brooks, must allow for a passage of stormwater flows associated with a 10-year storm.

(18) Non-native species may not be planted in restored areas.

(19) Disposal of debris must be in conformance with Maine Hazardous Waste, Septage and Solid Waste Management Act, 38 M.R.S.A. Sections 1301 *et seq.*

(20) Disturbance of vegetation must be avoided, if possible. Where vegetation is disturbed outside of the area covered by any road or structure construction, it must be reestablished immediately upon completion of the activity and must be maintained.

(21) A vegetated area at least 25 feet wide must be established and maintained between any new stormwater outfall structure and the high water line of any open water body. A velocity reducing structure must be constructed at the outlet of the stormwater outfall that will create sheet flow of stormwater, and prevent erosion of soil within the vegetated buffer. If the 25 foot vegetated buffer is not practicable, the applicant must explain the reason for a lesser setback in writing. Approval from the DEP must be in writing and any recommendations must be incorporated into the activity.

C. Definitions. The following terms, as used in this chapter, have the following meanings, unless the context indicates otherwise:

(1) **Diversion**. The rerouting of a river, stream or brook around a construction site and then back to the downstream channel.

(2) **Fill**. a. (verb) To put into or upon, supply to, or allow to enter a water body or wetland any earth, rock, gravel, sand, silt, clay, peat, or debris; b. (noun) Material, other than structures, placed in or immediately adjacent to a wetland or water body.

(3) **Floodplain wetlands**. Freshwater wetlands that are inundated with flood water during a 100-year flood event based on flood insurance maps produced by the Federal Emergency Agency or other site specific information.

(4) **Riprap**. Heavy, irregularly shaped rocks that are fit into place, without mortar, on a slope as defined in the MaineDOT Standard Specifications, dated December 2002.

12. Restoration of natural areas

A. Applicability

(1) This section applies to the restoration of an altered portion of a coastal wetland, freshwater wetland, great pond, river, stream or brook to its pre-existing natural condition through the removal of fill, structures or debris which is located in, on over, or adjacent to the natural resource.

(2) This section applies to the removal of non-native species and the planting of natural vegetation in any protected resource.

(3) This section applies to the retrieval of sand from below the normal high water line for redistribution on an existing adjacent sand beach on a great pond.

(4) This section applies to the restoration of the natural grade within a dredged area of a freshwater or coastal wetland.

(5) This section does not apply to:

(a) Restoration or replacement of a structure or unnatural condition such as the installation of a dam structure;

(b) Conversion of existing natural wetlands to wetland of a different type through flooding, inundation or other means;

(c) Dredging of silt, sand or soil materials which have been naturally deposited from a great pond, river, stream or brook, coastal wetland or freshwater wetland except that eroded sand may be retrieved from a great pond for redistribution on an existing adjacent sand beach;

(d) Mining of gravel or other mineral materials from a river, stream, or brook;

(e) Replacement of eroded soil material in areas above, below and adjacent to the normal high water mark of a great pond, river, stream or brook, freshwater wetland, or coastal wetland, except that sand may be regraded on an existing sand beach;

(f) Removal of a man-made dam structure;

(g) Draining of a freshwater wetland to convert an area to upland; or

(h) An activity occurring within a coastal sand dune system.

(6) This section does not apply to an activity that is not or will not be in compliance with the terms and conditions of permits issued under the Site Location of Development Law, 38°M.R.S.A. Sections 481 to 490, the Storm Water Management Law, 38 M.R.S.A. Section 420-D, or the Natural Resources Protection Act, 38 M.R.S.A. Sections 480-A to 480-Z.

(7) This section does not apply to an activity that will not conform to the local shoreland zoning ordinance.

NOTE:

(1) Contact the local Code Enforcement Officer for information on local shoreland zoning requirements.

(2) A permit will be required from the US Army Corps of Engineers for the following types of projects:

(a) Any activity involving impacts (direct and secondary) to freshwater wetlands;

(b) Any activity within a coastal wetland;

(c) Any activity within an open water area;

(d) Any activity within a river, stream or brook between October 2 and July 14; or

(e) Any activity involving work in waterways designated as Essential Fish Habitat for Atlantic salmon including all aquatic habitats in the watersheds of the following rivers and streams, including all tributaries to the extent that they are currently or were historically accessible for salmon migration: St. Croix, Boyden, Dennys, Hobart Stream, Aroostook, East Machias, Machias, Pleasant, Narraguagus, Tunk Stream, Patten Stream, Orland, Penobscot, Passagassawaukeag, Union, Ducktrap, Sheepscot, Kennebec, Androscoggin, Presumpscot, and Saco River.

A copy of the PBR notification form and original photographs, not photocopies, should be submitted to the Corps of Engineers for these activities (US Army Corps of Engineers, 675 Western Avenue, Suite #3, Manchester, ME 04351. Tel. (207) 623-8367).

B. Submissions

(1) The applicant is required to submit photographs of the area in which this activity is proposed.

(2) Photographs showing the finished activity must be submitted within 20 days of the activity's completion. The photographs must be sent with a copy of the notification form or labeled with the applicant's name and the town in which the activity took place.

(3) For an activity occurring in tidal waters, notice of approval of timing from the Department of Marine Resources must be submitted to the DEP with the notification form.

C. Standards

(1) The following measures must be taken to prevent erosion of soil or fill material from disturbed areas into the proposed resource:

(a) Staked hay bales or silt fence must be properly installed between the area of soil disturbance and the resource before the activity begins;

(b) Hay bales or silt fence barriers must be maintained until the disturbed area is permanently stabilized;

(c) Within 7 calendar days following the completion of any soil disturbance, and prior to any storm event, mulch must be spread on any exposed soils;

(d) All disturbed soils must be permanently stabilized; and

(e) Within 30 days of final stabilization of the site, any silt fence must be removed.

NOTE: For guidance on erosion and sedimentation controls, consult the Maine Erosion and Sediment Control BMPs, dated March 2003. This handbook and other references are available from the DEP.

(2) Disturbance of wetland vegetation must be avoided if possible. If wetland vegetation must be disturbed during the activity, it must be reestablished immediately upon completion of the activity and must be maintained.

(3) Non-native wetland plants may not be planted in disturbed areas.

(4) Only material that has been placed in a natural resource by persons may be removed from these waterbodies except for debris deposited within the previous 12 calendar months, and sand that will be regraded onto existing adjacent sand beaches.

(5) Sand may be regraded from below the normal high water line, but machinery may not operate in the water. Equipment operating on shore may reach into the water with a bucket or similar extension. Areas covered by vegetation, either aquatic or terrestrial, may not be disturbed during any beach regrading.

(6) Any activity involving the regrading of an existing sand beach must include the installation of permanent erosion control devices, such as water bars and diversion ditches, that prevent future erosion of the sand from upland runoff. The erosion control devices must be installed prior to the regrading of the beach.

(7) Vegetation and soil material used in restoring wetland areas must be similar to the vegetation and soil materials occurring under pre-existing natural conditions.

(8) No fill other than soil material used to restore natural elevations within a dredged area of a coastal or freshwater wetland may be placed in or adjacent to a natural resource. Sand may not be brought in from off-site to replenish an existing beach.

NOTE: Erosion of sand from beaches may be due to wave action or the action of overland water flows. Contact the DEP, the local Soil and Water Conservation District, or the local lake association for assistance with identifying sources of beach erosion.

(9) Wheeled or tracked equipment may not operate in the water. Equipment operating on the shore may reach into the water with a bucket or similar extension. Equipment may cross streams on rock, gravel or ledge bottom.

(10) All wheeled or tracked equipment that must travel or work in a vegetated wetland area must travel and work on mats or platforms in order to protect wetland vegetation.

(11) All excavated material must be stockpiled either outside the wetland or on mats or platforms. Hay bales, silt fence or mulch must be used, where necessary, to prevent sedimentation.

(12) If the activity occurs within tidal waters, the activity must occur during the time period approved by the Department of Marine Resources.

D. Definitions. The following terms, as used in this chapter, have the following meanings, unless the context indicates otherwise:

(1) **Dam**. Any man-made artificial barrier, including appurtenant works, the site on which it is located and appurtenant rights of flowage and access, that impounds or diverts a river, stream or brook or great pond.

(2) **Dredge**. To move or remove, by digging, scooping, or suctioning any sand, silt, mud, gravel, rock, or other material from the bottom of a water body or wetland surface.

(3) **Fill**. a. (verb) To put into or upon, supply to, or allow to enter a water body or wetland any earth, rock, gravel, sand, silt, clay, peat, or debris; b. (noun) Material, other than structures, placed in or adjacent to a wetland or water body.

(4) **Debris**. Non-mineral materials (including but not limited to wood, brush or flotsam) deposited by wind, wave action, flooding or wild animals within the last 12 months. This term includes beaver dams, but does not include beaver or muskrat houses or nests of wild birds such as wading birds or waterfowl.

(5) **Restoration**. An activity returning a great pond, coastal wetland, freshwater wetland, river, stream or brook from a disturbed or altered condition with lesser acreage or fewer functions to a previous condition with greater acreage or functions.

(6) **Structure**. Anything built for the support, shelter or enclosure of persons, animals, goods or property of any kind, together with anything constructed or erected with a fixed location on or in the ground. Examples of structures include buildings, utility lines and roads.

(7) **Non-native wetland plants**. Wetland grasses, forbs, shrubs, or trees not native to the State of Maine, for example, common reed (*Phragmites communis*) and purple loosestrife (*Lythrum salicaria*).

13. Habitat creation or enhancement and water quality improvement activities

A. Applicability

(1) This section applies to an alteration in or adjacent to a protected natural resource by a public natural resource agency. This rule also applies to an alteration in the same types of resources by a public utility, the Department of Transportation, owner of a federally licensed hydropower project, a conservation group, or a municipality in conjunction with and under the supervision of a public natural resource agency, exclusively for the purpose of:

(a) Creating or enhancing habitat for fisheries or wildlife; or

(b) A water quality improvement project.

These activities may include but are not limited to: fishway installation; the construction of artificial reefs; removal, maintenance, installation or modification of dam structures; and the construction and maintenance of nutrient retention structures.

(2) This section applies to a landfill closure activity approved by the DEP.

(3) This section does not apply to an activity that will not conform to the local shoreland zoning ordinance.

NOTES:

(1) Contact the local Code Enforcement Officer for information on local shoreland zoning requirements.

(2) A permit will be required from the US Army Corps of Engineers for the following types of projects:

(a) Any activity involving impacts (direct and secondary) to freshwater wetlands;

(b) Any activity within a coastal wetland;

(c) Any activity within an open water area;

(d) Any activity within a river, stream or brook between October 2 and July 14; or

(e) Any activity involving work in waterways designated as Essential Fish Habitat for Atlantic salmon including all aquatic habitats in the watersheds of the following rivers and streams, including all tributaries to the extent that they are currently or were historically accessible for salmon migration: St. Croix, Boyden, Dennys, Hobart Stream, Aroostook, East Machias, Machias, Pleasant, Narraguagus, Tunk Stream, Patten Stream, Orland, Penobscot, Passagassawaukeag, Union, Ducktrap, Sheepscot, Kennebec, Androscoggin, Presumpscot, and Saco River.

A copy of the PBR notification form and original photographs, not photocopies, should be submitted to the Corps of Engineers for these activities (US Army Corps of Engineers, 675 Western Avenue, Suite #3, Manchester, ME 04351. Tel. (207) 623-8367).

B. Submissions

(1) The applicant is required to submit photographs of the area in which this activity is proposed.

(2) Photographs showing the finished activity must be submitted within 20 days of the activity's completion. The photographs must be sent with a copy of the notification form or labeled with the applicant's name and the town in which the activity took place.

(3) Excluding landfill closures, if an activity is to be performed by a public utility, conservation group, municipality or the Maine Department of Transportation, certification from a public natural resource agency that the proposed activity will be done in conjunction with, or under the supervision of, the agency must be submitted with the notification form.

C. Standards

(1) The following measures must be taken to prevent erosion of soil or fill material from disturbed areas into the resource:

(a) Staked hay bales or silt fence must be properly installed between the area of soil disturbance and the resource before the activity begins;

(b) Hay bales or silt fence barriers must be maintained until the disturbed area is permanently stabilized;

(c) Within 7 calendar days following the completion of any soil disturbance, and prior to any storm event, mulch must be spread on any exposed soils;

(d) All disturbed soils must be permanently stabilized; and

(e) Within 30 days of final stabilization of the site, any silt fence must be removed.

NOTE: For guidance on erosion and sedimentation controls, consult the Maine Erosion and Sediment Control BMPs, dated March 2003. This handbook and other references are available from the DEP.

---

(2) Disturbance of vegetation must be avoided if possible. Where vegetation is disturbed outside of the area covered by any structures or filling associated with this activity, it must be reestablished immediately upon completion of the activity and must be maintained.

(3) Non-native wetland plants may not be planted in disturbed wetland areas.

(4) All debris or excavated material must be stockpiled either outside the wetland or on mats or platforms. Hay bales, silt fence, or mulch must be used where necessary to prevent sedimentation. Any debris generated during the activity must be prevented from washing downstream and must be removed from the wetland or water body. Disposal of debris must be in conformance with Maine Hazardous Waste, Septage and Solid Waste Management Act, 38 M.R.S.A. Section 1301 *et seq.*

(5) Uncured concrete may not be placed directly into the water. Concrete must be pre-cast and cured at least three weeks before placing in the water, or where necessary, must be placed in forms and cured at least one week before the forms are removed. No washing of tools, forms, etc. may occur in or adjacent to the waterbody or wetland.

(6) The use of untreated lumber is preferred. Lumber pressure-treated with chromated copper arsenate (CCA) may be used only if necessary and only if use is allowed under federal law and not prohibited from sale under 38 M.R.S.A. 1682, and provided it is cured on dry land in such a manner as to expose all surfaces to the air for at least 21 days prior to construction. Wood treated with creosote or pentachlorophenol may not be used where the wood will come in contact with water.

(7) Wheeled or tracked equipment may not operate in the water. Equipment operating on the shore may reach into the water with a bucket or similar extension. Equipment may cross streams on rock, gravel or ledge bottom.

(8) Work below the high water line of a great pond, river, stream or brook shall be done at low water, except as required for emergency flood control work. Measures, such as a silt boom or staked fencing, must be employed to reduce and isolate turbidity.

(9) All wheeled or tracked equipment that must travel or work in a vegetated coastal wetland must travel and work on mats or platforms in order to protect wetland vegetation.

D. Definitions. The following terms, as used in this chapter, have the following meanings, unless the context indicates otherwise:

(1) **Dam**. Any man made artificial barrier, including appurtenant works, the site on which it is located and appurtenant rights of flowage and access, that impounds or diverts a river, stream or brook or great pond.

(2) **Public natural resources agency**. The Maine Department of Inland Fisheries and Wildlife, the Maine Department of Marine Resources, the Maine DEP, the Maine Department of Conservation, the United States Fish and Wildlife Service, the United States Natural Resources Conservation Service, the United States Environmental Protection Agency, the United States Army Corps of Engineers, the United States Forest Service, National Marine Fisheries Service, National Park Service, National Oceanic and Atmospheric Administration, and County Soil and Water Conservation Districts.

(3) **Water quality improvement project**. An activity designed exclusively to maintain or enhance water quality of a freshwater wetland, great pond or river, stream, brook or a coastal wetland. Examples include but are not limited to: nutrient retention basins, water level manipulation and rerouting of drainage ways.

(4) **Non-native wetland plants**. Wetland grasses, forbs, shrubs, or trees not native to the State of Maine, for example, common reed (Phragmites communis) and purple loosestrife (*Lythrum salicaria*).

14. Piers, wharves, pilings and haulouts *[repealed]*

15. Public boat ramps

A. Applicability

(1) This section applies to the construction of a new, or the replacement of an existing, public boat ramp or carry-in launch area, including associated parking and accessways, in or adjacent to a protected natural resource by a public natural resource agency, Maine Department of Transportation, municipality, or owners of a federally licensed hydropower project within the resource affected by the hydropower project. This section does not apply if a portion of the ramp or related facilities is located in, on or over emergent marsh vegetation or intertidal mudflat.

(2) This section applies to the construction of up to 2 launch lanes at a facility provided no more than 2 lanes exist or will exist at the completion of the activity.

(3) This section does not apply to a new boat ramp on a lake infested with aquatic invasive plants, as defined in 38 M.R.S.A. Section 410-N. The Department of Environmental Protection identifies and maintains a list of these infested lakes.

NOTE: A permit will be required from the US Army Corps of Engineers for the following types of projects:

(a) Any activity involving open trench excavation in a waterbody;

(b) Any activity in coastal waterways;

(c) Any activity within a river, stream or brook between October 2 and July 14; or

(d) Any activity involving work in waterways designated as Essential Fish Habitat for Atlantic salmon including all aquatic habitats in the watersheds of the following rivers and streams, including all tributaries to the extent that they are currently or were historically accessible for salmon migration: St. Croix, Boyden, Dennys, Hobart Stream, Aroostook, East Machias, Machias, Pleasant, Narraguagus, Tunk Stream, Patten Stream, Orland, Penobscot, Passagassawaukeag, Union, Ducktrap, Sheepscot, Kennebec, Androscoggin, Presumpscot, and Saco River.

A copy of the permit by rule notification form and original photographs, not photocopies, should be submitted to the Corps of Engineers for these activities (US Army Corps of Engineers, 675 Western Avenue, Suite #3, Manchester, ME 04351. Tel. (207) 623-8367).

B. Submissions

(1) The applicant is required to submit photographs of the area in which this activity is proposed.

(2) Photographs showing the finished activity must be submitted within 20 days of the activity's completion. The photographs must be sent with a copy of the notification form or labeled with the applicant's name and the town in which the activity took place.

(3) If the project results in a new or expanded access drive or parking area, the project design plan, erosion control plan and a request for review for an activity on great ponds classified as GPA under 38 M.R.S.A. Section 465-A must be submitted to the DEP's Division of Watershed Management (DWM) prior to submitting the notification form to the DEP. A certification from DWM must be obtained and must be included with the notification form, along with final project plans and the erosion control plan, when it is submitted to the DEP.

(4) If the proposed activity involves work below the mean low water line of a waterbody, the applicant shall submit a copy of the project design plan along with a copy of the notification form to the Department of Conservation, Bureau of Parks and Lands, Submerged Lands Program (State House Station #22 Augusta, Maine 04333) at the time the notification form is submitted to the DEP. Work on the activity may not begin until a lease or easement is obtained or the Bureau of Parks and Lands has provided notification that one is not necessary.

NOTE: Processing of a request for a lease or easement may require several weeks of review by the Bureau of Public Lands.

---

(5) If the proposed activity is located within a coastal wetland area, the applicant shall submit, along with the notification form, a letter from both the Department of Inland Fisheries and Wildlife and the Department of Marine Resources that describes times of the year in which the construction of the boat ramp may occur.

(6) If the proposed activity is located within a freshwater wetland, great pond, river, stream or brook, the applicant shall submit, along with the notification form, a letter from the Department of Inland Fisheries and Wildlife that describes times of the year in which the construction of the boat ramp may occur.

C. Standards

(1) The erosion control plan must be followed. Erosion of soil or fill material from disturbed areas into the resource must be prevented. The following measures must be taken:

(a) Staked hay bales or silt fence must be properly installed between the area of soil disturbance and the resource before the activity begins;

(b) Hay bales or silt fence barriers must be maintained until the disturbed area is permanently stabilized;

(c) Within 7 calendar days following the completion of any soil disturbance, and prior to any storm event, mulch must be spread on any exposed soils;

(d) All disturbed soils must be permanently stabilized; and

(e) Within 30 days of final stabilization of the site, any silt fence must be removed.

NOTE: For guidance on erosion and sedimentation controls, consult the Maine Erosion and Sediment Control BMPs, dated March 2003. This handbook and other references are available from the DEP.

---

(2) A hard-surfaced launch must be used where boats will be launched from trailers, and must meet the following specifications:

(a) The underwater portions of the ramp, at the time of construction, must be constructed of reinforced precast concrete planks, panels or slabs;

(b) The portion of the ramp used by the towing vehicle may not have a slope that exceeds 15%; the portion of the ramp used by the trailer only may not have a slope that exceeds 20%;

(c) The width of the hard surfaced launch lane(s) may not exceed 20 feet as measured parallel to shore;

(d) The upper most 6 inches of the base must consist of crushed rock or crushed or screened gravel having 5% or less passing a 200 mesh sieve; and

(e) Fill slopes at or below the normal high water line must be protected with riprap. Riprap installation must meet the standards for riprap in PBR Section 8, "Shoreline stabilization".

(3) An additional area of up to 8 feet wide as measured parallel to shore may be constructed using bituminous pavement, precast concrete planks, panels or slabs to support docking systems.

(4) A carry-in launch area for small boats must:

(a) Consist of gravel, rock, sand, vegetation, or other erosion resistant materials;

(b) Have a grade not exceeding 18%; and

(c) Be Limited, below the low water line, to constructing a path up to 6 feet wide, measured parallel to shore, consisting of cobble, rock or concrete planks, to access deeper water to float watercraft.

(5) A vegetated buffer zone at least 25 feet in width must be maintained between any new or expanded parking area and the waterbody.

(6) A parking area or access road may not be located in a protected natural resource, except that an access roadway may cross a stream if the requirements of PBR Section 10 "Stream crossings" are met.

(7) Any new or expanded parking area or roadway must divert stormwater runoff away from the ramp to an area where it may infiltrate into the ground before reaching the waterbody.

(8) Machinery may operate below the water line only when necessary to excavate or place material below the existing water level and must travel and operate on temporary mats or portions of the ramp that have been constructed.

(9) Timing of the activity must conform to the recommendations of biologists from the Department of Inland Fisheries and Wildlife or the Department of Marine Resources, as appropriate, as described in letters submitted along with the notification form.

(10) Any debris generated during the work must be prevented from washing downstream and must be removed from the wetland or water body. Disposal of debris must be in conformance with Maine Hazardous Waste, Septage and Solid Waste Management Act, 38 M.R.S.A Section 1301 *et seq.*

(11) Uncured concrete may not be placed directly into the water. Concrete must be pre-cast and cured at least three weeks before placing in the water or, where necessary, must be placed in forms and cured at least one week before the forms are removed. No washing of tools, forms, etc. may occur in or adjacent to the waterbody or wetland.

(12) The use of untreated lumber is preferred. Lumber pressure-treated with chromated copper arsenate (CCA) may be used only if necessary and only if use is allowed under federal law and not prohibited from sale under 38 M.R.S.A. 1682, and provided it is cured on dry land in such a manner as to expose all surfaces to the air for a period of at least 21 days prior to

construction. Wood treated with creosote or pentachlorophenol shall not be used where it will contact water.

D. Definitions. The following terms, as used in this chapter, have the following meanings, unless the context indicates otherwise:

(1) **Emergent marsh vegetation**. Plants that are erect, rooted and herbaceous, and that may be temporarily to permanently flooded at the base, but do not tolerate prolonged inundation of the entire plant; (e.g. cattails, saltmarsh cordgrass).

(2) **Public natural resource agency**. The Maine Department of Inland Fisheries and Wildlife, the Maine Department of Marine Resources, the Maine DEP, the Maine Department of Conservation, the United States Fish and Wildlife Service, the United States Forest Service, the United States Natural Resources Conservation Service and County Soil and Water Conservation Districts.

(3) **Project design plan**. A detailed plan of the proposed activity indicating all dimensions (width, height, length) relative to the mean low water mark, and including any appurtenant structures that may be seasonal in nature.

16. Activities in coastal sand dunes

A. Applicability

(1) This section applies to the following activities in coastal sand dune systems:

(a) Repair or replacement of an existing seawall, patio, deck, driveway, walkway, porch or parking area;

(b) Dune restoration or construction;

(c) Installation or repair of underground utility lines;

(d) Construction of a new structure or new development, other than a building or closed fence, in a back dune area;

(e) New buildings or an addition to an existing building in a back dune when mitigation and enhancement measures are not required as determined by the DEP;

(f) Construction of closed fences in a back dune, non-erosion hazard area;

(g) Construction of open fences in a frontal dune or back dune erosion hazard area;

(h) Construction of cobble-trapping fences with permanent anchors landward of an existing seawall in a developed area;

(i) Construction of a walkway or driveway on existing developed area in a frontal dune; and

(j) Installation of underground propane tanks.

PBR applications are reviewed on a case by case basis to determine the concern for damage due to shoreline change. In an area where concern for damage due to shoreline change is identified or mitigation and enhancement measures are required, the applicant is required to file for an individual Natural Resources Protection Act Permit, and is encouraged to contact the DEP for a pre-application meeting.

(2) This section does not apply to the construction of a new structure or addition to an existing structure in V-Zones.

(3) This section does not apply to an activity that will not conform to the local shoreland zoning ordinance.

NOTE: Contact the local Code Enforcement Officer for information on local shoreland zoning requirements.

B. Submissions

(1) The applicant is required to submit photographs of the area in which the activity is proposed.

(2) Photographs showing the finished activity must be submitted within 20 days of the activity's completion. The photographs must be sent with a copy of the notification form or labeled with the applicant's name and the town in which the activity took place.

(3) The following information must be submitted with the notification form.

(a) A site plan that includes the following information.

(i) The dimensions and square footage of the lot.

(ii) The dimensions (including height) and square footage of existing and proposed structures and development e.g. houses, sheds, garages, decks, patios, driveways, parking areas, walkways, lawn, fences, etc. and their location on the lot (see definitions of Building, Footprint and Development in Section 16(D)). The existing and the proposed structures must be clearly distinguished.

(iii) The location of property lines and names of abutters.

(iv) The location of buildings on adjacent properties.

For patios, decks, driveways, walkways, porches, and parking areas that are to be repaired or replaced, the site plan must include the length and width of the existing structure, the height of the existing structure if it is elevated and the thickness of the existing structure;

For new buildings or an addition to an existing building in a back dune erosion hazard area, the site plan must include a post foundation designed to meet the requirements of the Department's *Coastal Sand Dune Rules*, 06-096 CMR 355(6)(G);

(b) A copy of the most recent Coastal Sand Dune Geology Map, produced by the Maine Geological Survey, which contains the project site and has the project site clearly identified on the photo;

NOTE: Maps are available for review at the town offices of most coastal communities and at DEP regional offices. The maps are also available for purchase from the Maine Geological Survey, 22 State House Station, Augusta, ME 04333

(c) For seawall repair or replacement only, an accurate plan drawn to scale by a licensed surveyor, coastal geologist or professional engineer showing the location of the existing and proposed wall and the elevation of the wall(s) referenced to a nearby permanent and reproducible elevation point, such as a described point on a building or other structure. The plan must be signed and dated by the person responsible for preparing the drawing;

(d) If moving sand in an area seaward of the frontal dune between April 1 and September 1, a copy of the written approval to proceed from the Department of Inland Fisheries and Wildlife; and

(e) For open or cobble-trapping fences, a detail showing a typical section of the fence and the dimensions of the fence including the size of the openings.

C. Standards

(1) No more than 40% of the lot may be covered by development including, but not limited to, buildings, driveways, walkways, parking areas, lawn or landscaped area, and land area previously developed; nor may the total area to be covered by the footprint of buildings exceed 20% of the lot, including existing buildings. Land area within the V-zone may not be included as part of a lot for the purposes of this section.

(2) Where development that is existing or did exist within one year of application exceeds 40% of the total lot area, the percentage of developed area may not be increased.

(3) Where the footprint of buildings that are existing or did exist within one year of application exceeds 20% of the total lot area, the percentage of area covered by buildings may not be increased.

(4) An activity occurring on land adjacent to a coastal wetland, freshwater wetland containing over 20,000 square feet of open water or emergent marsh vegetation, great pond, river, stream or brook must meet the erosion control and setback requirements of Section 2, "Activities adjacent to protected natural resources".

(5) Building or building additions may not result in a total structure greater than 35 feet in height or have a footprint greater than 2500 square feet. For purposes of determining whether the building is 35 feet high, the starting point for measuring the bottom elevation of the building is described in Chapter 355(5)(D). The top of the building is considered to be the highest point of the building excluding ancillary features such as weathervanes or chimneys that are attached to the building's primary roof but including features such as decks or observations towers that extend higher than the building's primary roof.

NOTE: The Department recommends that projects be constructed according to the Coastal Construction Manual published by the Federal Emergency Management Agency, which describes the best practices for residential construction in coastal areas.

(6) A building may not be constructed so that any part of the building extends seaward of a line drawn between the seaward most point of buildings on adjacent properties if the construction would significantly obstruct the view from an adjacent building.

(7) During project construction, disturbance of dune vegetation must be avoided and native vegetation must be retained on the lot to the maximum extent possible. Any areas of dune vegetation that are disturbed must be restored as quickly as possible. Dune vegetation includes American beach grass, rugosa rose, bayberry, beach pea, beach heather and pitch pine.

(8) No fill may be placed on the project site other than that required for an approved dune restoration project or new construction. Foundation backfill and sand dune restoration and construction must utilize sand that has textural and color characteristics consistent with the natural sand’s textural and color characteristics.

(9) No sand may be moved seaward of the frontal dune between April 1 and September 1, unless written approval from the Department of Inland Fisheries and Wildlife has been obtained.

(10) An activity involving dune restoration or dune construction must be performed between March 1 and April 1 or October 1 and November 15. Dune grass must be planted immediately after construction. Dune grass must be planted with 3 culms per hole. The holes must be spaced 18 inches apart. The planted dune grass must be protected from pedestrian traffic until the dune grass is well established. The density of the growing stand of dune grass must be at least 40 plants per 100 square feet.

(11) A dune restoration/construction activity must use sand that has textural and color characteristics consistent with the natural sand's textural and color characteristics.

(12) A dune restoration or dune construction activity must minimize damage to existing dune vegetation and must follow the configuration and alignment of adjacent dunes as closely as possible. No sand or other materials may be placed below the normal high tide line.

(13) The replacement of a seawall may not increase the height, length or thickness dimensions of a seawall beyond that which legally existed within 24 months of submission of the notification form. The replaced seawall may not be significantly different in construction from the one that previously existed.

(14) A private walkway must be 4 feet or less in width. A public walkway must be 10 feet or less in width. Walkways must allow for sand movement and may not have a significant impact on vegetation outside of the footprint of the walkway. No portion of the walkway may be located in the V-Zone.

(15) The repair or replacement of a patio, deck, driveway, walkway, porch or parking area may not increase the height, length, width or thickness dimensions of the existing structure. The new or repaired patio, deck, driveway, walkway, porch or parking area may be constructed of a different material provided the dimensions remain the same.

(16) All proposed construction and development activity is limited to the location and extent depicted on the plan or drawing submitted pursuant to subsection B(3) of this section.

(17) An open fence must have openings that allow for the easy movement of water, wind and sand. If a picket board fence is proposed, the opening must be at least 4 inches wide or at least double the width of the picket board, whichever is greater. A continuous footing may not be used to support the fence and support posts may not be larger than 4 inches by 4 inches.

(18) A cobble-trapping fence may only be placed on properties that are adjacent to beaches with gravel and cobble sediment and have developed areas such as lawn between the building and the beach. Such a fence may not be placed on a naturally vegetated frontal dune ridge.

(19) A cobble-trapping fence must be placed landward of an existing seawall in a developed area, must not extend more than two feet beyond the building's foundation on either side, must not consist of more than one row of fencing, must not have openings smaller than 2 inches square or in diameter, and must not be higher than 4 feet above grade, The fence may be supported by permanent, small subsurface pipes or similar emplacements that are left in place all year. A permanent, continuous footing may not be used to support the fence. Cobbles and sediment trapped by the fence may be removed and placed immediately seaward of a frontal dune or seawall on the property.

(20) Underground propane tanks must be placed under an existing structure on the parcel.

D. Definitions. The following terms, as used in this chapter, have the following meanings, unless the context indicates otherwise:

(1) **Back dunes**. Back dunes consist of sand dunes and eolian sand flats that lie landward of the frontal dune or a low energy beach. Back dunes include those areas containing artificial fill over back dune sands or over wetlands adjacent to the coastal sand dune system.

(2) **Beach**. The zone of unconsolidated sand or gravel that extends landward from the mean low water line to the seaward toe of a dune. The definition of beach includes the beach face and berm.

(3) **Beach nourishment**. *(Deleted)*

(4) **Berm**. The flat or gently sloping area between the high tide limit and frontal dune. A berm is formed by deposition of sand transported to shore by tides, waves, wind and currents.

(5) **Building.** A structure designed for habitation, shelter, storage, or as a gathering place that has a roof. For the purposes of this rule, the foundation is considered to be a part of the building. A porch with a roof, attached to the exterior walls of a building, is considered part of the building.

(6) **C-zone**. *(Deleted)*

(7) **Closed fence**. A fence that effectively blocks the movement of wind, water, or sand, such as a stockade fence or snow fence.

(8) **Cobble**. A rock that is smaller than a boulder and larger than gravel.

(9) **Cobble-trapping fence**. An open fence with a continuous porosity equal to or greater than 50% that is designed to prevent cobbles from passing through it .

(10) **Development**. The alteration of property for human-related use including, but not limited to, buildings, decks, driveways, parking areas, lawns, landscaped areas, and areas of non-native vegetation, and any other appurtenant facilities, but excluding temporary structures.

(11) **Dune vegetation**. Dune plant species typically adapted to Maine's coastal sand dune systems including, but not limited to, American beach grass, rugosa rose, bayberry, beach pea, beach heather and pitch pine.

(12) **Erosion hazard area**

(a) Any portion of the coastal sand dune system that can reasonably be expected to become part of a coastal wetland in the next 100 years due to cumulative and collective changes in the shoreline from:

(i) Historical long-term erosion;

(ii) Short-term erosion resulting from a 100-year storm; or

(iii) Flooding in a 100-year storm after a two-foot rise in sea level; or

(b) Any portion of the coastal sand dune system that is mapped as an AO flood zone by the effective FEMA Flood Insurance Rate Map, which is presumed to be located in an Erosion Hazard Area unless the applicant demonstrates based on site-specific information, as determined by the DEP, that a coastal wetland will not result from either (i), (ii), or (iii) occurring on an applicant's lot given the expectation that an AO-Zone, particularly if located immediately behind a frontal dune, is likely to become a V-Zone after 2 feet of sea level rise in 100 years.

(13) **Footprint**. The outline that would be created on the ground by extending the exterior walls of the building to the ground surface.

(14) **Foundation**. The portion of a structure that transmits the loads of the structure to the ground, including but not limited to: spread footings, foundation walls, posts, piers, piles, beams, girders, structural slabs, bracings, and associated connectors.

(15) **Frontal dune**. The frontal dune is the area consisting of the most seaward ridge of sand and gravel and includes former frontal dune areas modified by development. Where the dune has been altered from a natural condition, the dune position may be inferred from the present beach profile, dune positions along the shore, and regional trends in dune width. The frontal dune may or may not be vegetated with dune vegetation and may consist in part or in whole

of artificial fill. In areas where smaller ridges of sand are forming in front of an established dune ridge, the frontal dune may include more than one ridge.

(16) **Land adjacent to a protected natural resource**. Any land area within 75 feet, measured horizontally, of the normal high water line of a great pond, river, stream or brook or the upland edge of a coastal wetland or freshwater wetland.

(17) **Lot**. Also referred to as a lot of record, all contiguous areas under a single present ownership as indicated by a deed and recorded in the registry of deeds constituting a piece of land measured and marked by metes and bounds descriptions or by some other approved surveying technique.

(18) **Open fence**. A fence through which water, wind and sand can easily move, for example, a split rail fence.

(19) **Permanent structure** (also referred to as a "structure" in this section). Any structure constructed or erected with a fixed location or attached to a structure with a fixed location for a period exceeding 7 months each year. Permanent structures include, but are not limited to: causeways, piers, docks, concrete slabs, piles, marinas, retaining walls, buildings, swimming pools, fences, seawalls, roads, driveways, parking areas, and walkways. Natural features, such as frontal dunes, are not considered permanent structures. For the purposes of this section, open decks and storage sheds that comply with the criteria outlined below are not considered to be structures.

(a) Open decks that: do not exceed a total of 200 square feet, including any existing decks on the property, are not located in a V-Zone, are supported by posts, and are elevated at least 3 feet above existing grade to allow unobstructed flow of sand, wind and water. One set of outside stairs, attached to the deck, will be considered part of the open deck but not included when determining the 200 square foot area.

(b) One storage shed per lot that does not exceed 100 square feet, provided that it is not located in a V-Zone and that it is not converted to a habitable structure.

(20) **Posts**. Any pilings or column supports that allow water and sand to move freely underneath the structure, and that are adequate to provide a foundation for the structure they supports. The term "post" does not include frost walls or breakaway foundation construction.

(21) **Seawall**. Vertical wall, or other sloped barrier that separates land from water areas, commonly constructed out of rocks, wood, concrete or other similar materials, generally built for the purpose of protecting structures or property from shoreline erosion caused by wave or current action. A seawall is presumed to be a permanent structure.

(22) **V-Zone**. That land area of special flood hazard subject to a one- percent or greater chance of flooding in any given year, and subject to additional hazard from high velocity water due to wave action. Wave heights or wave run-up depths are equal to or greater than 3 feet in V-Zones. V-Zones are as identified on the effective Flood Insurance Rate Maps and any subsequent Letters of Map Changes issued by FEMA.

17. Transfers and permit extensions

A. Applicability

(1) This section allows an individual permit, general permit or tier review approval issued under the Natural Resources Protection Act to be transferred from the permittee to the applicant when the permitted project changes ownership.

(2) This section allows an individual permit, general permit or tier review approval issued under the Natural Resources Protection Act to be extended one time provided the approved activity has not begun and the permit has not expired. This section does not apply to an extension request for a permit previously extended under this chapter.

B. Submissions

(1) For a transfer, the applicant must submit an affidavit attesting to the fact that he or she has received, read, understand and will comply with the terms of the DEP Order(s) and conditions of approval for the activity.

(2) For a transfer, the applicant must submit a copy of the order(s) to be transferred as well as a copy of documents establishing proof of ownership of the property on which the activity is located or sufficient title, right or interest to complete the activity in accordance with the requirements of the permit and the NRPA.

(3) For a transfer, the original permittee must submit a statement attesting that he or she agrees to the transfer of his or her permit to the applicant.

(4) For a transfer of a project that requires compensation, the applicant must submit documentation that demonstrates sufficient expertise and financial resources to complete the approved compensation work, including subsequent monitoring and corrective actions.

(5) For permit extensions, a copy of the order(s) to be extended shall be submitted to the Department along with a written reason for the extension request.

C. Definitions. The following terms, as used in this chapter, have the following meanings, unless the context indicates otherwise:

(1) **Affidavit**. A written declaration made under oath before a notary public.

(2) **Extension**. A DEP approval to extend an unexpired permit. An extension is valid for 2 years.

18. Maintenance dredging permit renewal

A. Applicability

(1) This section applies to the renewal of an individual permit issued by the DEP for maintenance dredging in a coastal wetland, great pond and river, stream or brook provided that:

(a) The area to be dredged is located in an area that was dredged within the last ten years;

(b) The permit to be renewed was an individual Natural Resources Protection Act permit. If the most recent dredge was permitted under a PBR, this section does not apply;

(c) The area to be dredged is not located in or within 250 feet of an area identified as significant wildlife habitat by the Department of Inland Fisheries and Wildlife;

NOTE: Contact the nearest regional office of the Maine Department of Inland Fisheries and Wildlife for more information

(d) Less than 50,000 cubic yards will be dredged.

(2) This section does not apply to the renewal of a permit issued by the DEP for gravel mining in any protected natural resource.

NOTE:

(1) Displacement or bulldozing of sediment within a lobster pound does not require a Natural Resources Protection Act permit provided that the sediment is not removed from the area inundated as a result of the impoundment, 38 M.R.S.A. Section 480-Q(19).

(2) Any activity involving dredging may require a permit from the US Army Corps of Engineers. A copy of the PBR notification should be submitted to the Corps of Engineers for these activities (US Army Corps of Engineers, RR 2 Box 1855, Manchester, ME 04351).

B. Submissions

(1) A copy of the permit issued for the most recent maintenance dredging must be submitted to the DEP with the notification form.

(2) For a dredge activity in tidal waters, notice of approval of the timing of the activity from the Department of Marine Resources must be submitted to the DEP with the notification form.

C. Standards

(1) The dimensions of the area proposed to be dredged may not exceed previously approved dimensions and dredging must be conducted in the same location.

(2) All conditions previously attached to the original permit are incorporated into the permit by rule unless otherwise stated by the DEP in writing.

(3) For a dredge activity in tidal waters, the activity must occur during the time period approved by the Department of Marine Resources.

(4) Any debris or dredged material generated during the activity may not be disposed of in any protected natural resource unless otherwise allowed in this chapter and the disposal conforms with the Maine Hazardous Waste, Septage and Solid Waste Management Act, 38 M.R.S.A. Sections 1301 *et seq.*

D. Definitions. The following terms, as used in this chapter, have the following meanings, unless the context indicates otherwise:

(1) **Dredge**. To move or remove, by digging scooping or suctioning any sand, silt, mud, gravel, rock, or other material from the bottom of a water body or wetland surface.

(2) **Dredge spoils**. Sand, silt, mud, gravel rock or other sediment or material that is moved from coastal wetlands, great ponds or rivers, streams or brooks.

19. Activities in, on or over significant vernal pool habitat

A. Applicability

(1) This section applies to activities in, on, or over a significant vernal pool habitat or a potential significant vernal pool habitat. Significant vernal pool habitat consists of a vernal pool depression and the portion of the critical terrestrial habitat within a 250 foot radius of the spring or fall high water mark of the depression.

NOTE: The 250 feet of critical terrestrial habitat protected as significant vernal pool habitat is only a portion of the habitat used by adult wood frogs, ambystomatid salamanders, and threatened and endangered species. Tracking studies of adult pool-breeding amphibians have shown that they can travel over a third-mile away from their breeding pool, and that a radius of 750 feet around the pool is optimal for protecting viable amphibian populations. The DEP encourages efforts to protect more habitat adjacent to a vernal pool than this regulation has authority over.

(2) This section does not apply to an activity that is not or will not be in compliance with the terms and conditions of a permit issued under the Site Location of Development Law, 38 M.R.S.A. Sections 481 to 490, the Stormwater Management Law, 38 M.R.S.A. Section 420-D, or the Natural Resources Protection Act, 38 M.R.S.A. Section 480-A to BB.

NOTE: For additional regulatory provisions applicable to significant vernal pools, see 06-096 CMR 335, Significant Wildlife Habitat.

B. Submissions. The following items must be submitted with the notification, unless otherwise provided below.

(1) Photographs of the area that will be affected by the activity proposed.

(2) Photographs showing the completed project and the affected area must be submitted within 20 days of the activity's completion. The photographs must be sent with a copy of the notification form or labeled with the applicant's name and the town in which the activity took place.

(3) A scaled plan or drawing of the area affected, including but not limited to the following information:

(a) The entire property on which the activity will take place, including property lines, the vernal pool depression and remaining surrounding significant vernal pool habitat within

250 feet of the spring or fall high water mark of the depression, and the boundaries and location of other protected natural resources such as streams and other wetlands;

(b) Proposed activity and existing development on which the activity will take place, including buildings, parking areas, roads, fill areas, landscaped areas, etc.; and

(c) Any site constraints limiting development beyond the significant vernal pool habitat, such as steep slopes.

It is not necessary to have the plan formally prepared. However, it must be legible and drawn to a scale that allows a clear representation of distances and measurements on the plan.

C. Standards. The following measures must be taken during construction and maintenance of the activity.

(1) No disturbance within the vernal pool depression.

(2) Except for activities in existing developed areas, maintain a minimum of 75% of the critical terrestrial habitat as unfragmented forest with at least a partly-closed canopy of overstory trees to provide shade, deep litter and woody debris.

(3) Maintain or restore forest corridors connecting wetlands and significant vernal pools.

(4) Minimize forest floor disturbance.

(5) Maintain native understory vegetation and downed woody debris.

In determining whether the standard in Section 19(C)(2) has been met, the DEP considers only that portion of the critical terrestrial habitat within the significant vernal pool habitat, which is the area within a 250 foot radius of the spring or fall high water mark of the vernal pool depression.

(6) Take the following measures to prevent erosion of soil or fill material from disturbed areas:

(a) Staked hay bales or silt fence must be properly installed at the edge of disturbed areas between the activity and the vernal pool depression before the activity begins;

(b) Hay bales or silt fence barriers must be maintained until the disturbed area is permanently stabilized;

(c) Within 7 calendar days following the completion of any soil disturbance, and prior to any storm event, mulch must be spread on any exposed soils;

(d) All disturbed soils must be permanently stabilized; and

(e) Within 30 days of final stabilization of the site, any silt fence must be removed.

NOTE: For guidance on erosion and sedimentation controls, consult the Maine Erosion and Sediment Control BMPs, dated March 2003. This handbook and other references are available from the DEP.

(7) An activity of a type that would qualify for a permit by rule under one of the other sections of this chapter listed below, notwithstanding any restriction concerning significant wildlife habitat that may be in that section, must also meet the requirements of that section.

Sec. 4. Replacement of structures
Sec. 9. Crossings (utility lines, pipes, cables)
Sec. 10. Stream crossings (bridges, culverts, fords)
Sec. 11. State transportation facilities
Sec. 12. Restoration of natural areas.
Sec. 13. Habitat creation or enhancement and water quality improvement activities
Sec. 15. Public boat ramps
Sec. 16. Coastal sand dune projects

D. Definitions. The following terms, as used in this chapter, have the following meanings, unless the context indicates otherwise.

(1) **Critical terrestrial habitat**. Uplands and wetlands associated with significant vernal pools used by pool breeding amphibians for migration, feeding, and hibernation, in particular, forested wetlands and forested uplands that provide deep organic litter, coarse woody debris and canopy shade.

(2) **Existing developed area**. The area of property altered including, but not limited to, buildings, driveways, parking areas, wastewater disposal systems, lawns and other landscaped areas, as of September 1, 2007.

(3) **Significant vernal pool habitat**. A vernal pool depression and the portion of the critical terrestrial habitat within a 250 foot radius of the spring or fall high water mark of the depression. For complete criteria, see Chapter 335(9), Significant vernal pools.

(4) **Vernal pool depression**. This area includes the vernal pool depression up to the spring or fall high water mark, and includes any vegetation growing within the depression.

20. Activities located in, on or over high or moderate value inland waterfowl and wading bird habitat, or shorebird nesting, feeding, and staging areas

A. Applicability

(1) This section applies to activities in existing developed areas located in, on, or over high or moderate value inland waterfowl and wading bird habitat, or shorebird nesting, feeding, and staging areas.

(2) This section applies to an expansion of up to 10% of an existing development area within a high or moderate value inland waterfowl and wading bird habitat, or a shorebird feeding area, if an individual permit is not otherwise required for activity on the parcel.

(3) This section applies to activities consisting of cutting or removal of vegetation within high or moderate value inland waterfowl and wading bird habitat, or shorebird feeding or roosting buffer.

(4) This section applies to new activities, such as the construction of buildings, roads, and driveways, in an upland area on a lot in moderate value inland waterfowl and wading bird habitat and that contains no Development area.

NOTE: If exterior lighting is anticipated to extend into the habitat within the 150 foot setback, the Department may request a detailed lighting plan.

(5) This section does not apply to an activity that is not or will not be in compliance with the terms and conditions of a permit issued under the *Site Location of Development Law*, 38 M.R.S.A. §§ 481–490, the *Stormwater Management Law*, 38 M.R.S.A. §420-D, or the *Natural Resources Protection Act*, 38 M.R.S.A. §§ 480-A–480-FF.

(6) This section does not apply to an activity that does not conform to the local shoreland zoning ordinance.

NOTE: For additional regulatory provisions applicable to significant wildlife habitats, see *Significant Wildlife Habitat*, 06-096 CMR 335 (last amended June 8, 2006).

B. Submissions. The following items must be submitted with the notification, unless otherwise provided below.

(1) Photographs of the area that will be affected by the activity proposed.

(2) Photographs showing the completed project and the affected area must be submitted within 20 days of the activity's completion. The photographs must be sent with a copy of the notification form or labeled with the applicant's name and the town in which the activity took place.

(3) A scaled plan or drawing of the area affected, including information such as the following.

(a) The entire property on which the activity will take place, including property lines, and the boundaries and location of protected natural resources such as streams, and wetlands, as well as significant wildlife habitat (specify type of significant wildlife habitat).

(b) Proposed activity and existing development on which the activity will take place, including buildings, parking areas, roads, fill areas, landscaped areas, etc. If up to a 10% expansion of an existing developed area is proposed within a high or moderate value inland waterfowl and wading bird habitat, or a shorebird feeding area, indicate the existing developed area and proposed expansion.

It is not necessary to have the plan formally prepared. However, it must be legible and drawn to a scale that allows a clear and accurate representation of distances and measurements on the plan.

(4) For cutting or removal of vegetation in a shorebird roosting buffer, notice of approval of the activity from the Department of Inland Fisheries and Wildlife (IF&W) must be submitted to the DEP with the notification form. The IF&W approval may specify the location of the activity or other conditions of approval.

(5) For any work in, on or over a shorebird nesting, feeding, and staging area that would occur between July 15 and September 15, notice of approval of the timing of the activity from the Department of Inland Fisheries and Wildlife must be submitted to the DEP with the notification form.

(6) For new activities in a moderate value inland waterfowl and wading bird habitat that take place between April 15 and July 31 of any year, notice of approval of the timing of the activity from the Department of Inland Fisheries and Wildlife must be submitted to the DEP with the notification form.

C. Standards

(1) For activities in, on or over a shorebird nesting, feeding, and staging area between July 15 and September 15, the activity must occur during the time period approved by the Department of Inland Fisheries and Wildlife.

(2) The following measures must be taken to prevent erosion of soil or fill material from disturbed areas into the resource:

(a) Staked hay bales or silt fence must be properly installed at the edge of disturbed areas between the activity and the undeveloped area before the activity begins;

(b) Hay bales or silt fence barriers must be maintained until the disturbed area is permanently stabilized;

(c) Within 7 calendar days following the completion of any soil disturbance, and prior to any storm event, mulch must be spread on any exposed soils;

(d) All disturbed soils must be permanently stabilized; and

(e) Within 30 days of final stabilization of the site, any silt fence must be removed.

NOTE: For guidance on erosion and sedimentation controls, consult the Maine Erosion and Sediment Control BMPs, dated March 2003. This handbook and other references are available from the DEP.

(3) An activity of a type that would qualify for a permit by rule under one of the sections listed below must also meet the requirements of that section.

Sec. 3. Intake pipes
Sec. 4. Replacement of structures
Sec. 6. Movement of rocks or vegetation
Sec. 7. Outfall pipes
Sec. 8. Shoreline stabilization
Sec. 9. Crossings (utility lines, pipes, cables)

Sec. 10. Stream crossing (bridges, culverts, fords)
Sec. 11. State transportation facilities
Sec. 12. Restoration of natural areas
Sec. 13. Habitat creation or enhancement and water quality improvement activities
Sec. 15. Public boat ramps
Sec. 16. Coastal sand dune projects
Sec. 18. Maintenance dredging renewal permit

(4) Except for cutting or removal of vegetation allowed pursuant to paragraph C(6) of this section, cutting or removal of vegetation within a high or moderate value inland waterfowl and wading bird habitat, or shorebird roosting buffer, is limited to:

(a) Removal of a safety hazard; or

(b) Cutting or removal of vegetation to allow for a footpath not to exceed 6 feet in width as measured between tree trunks and shrub stems. The footpath may not result in a cleared line of sight to the water.

Any cutting or removal of vegetation within a shorebird roosting buffer under this paragraph must be done in consultation with and as approved by the Department of Inland Fisheries and Wildlife.

(5) Cutting or removal of vegetation within a shorebird feeding buffer must meet the vegetative screening standards set forth in *Mandatory Shoreland Zoning*, 38 M.R.S.A. §439-A(6). In interpreting and enforcing these standards, the department shall rely upon the department's shoreland zoning rules regarding cutting or removal of vegetation for activities other than timber harvesting[1] and apply the cutting standards applicable within 75 feet of a coastal wetland to the entire 100-foot feeding buffer.

(6) New activities in an upland area on a lot in a moderate value inland waterfowl and wading bird habitat and that contains no Development area must meet the following standards:

(a) New structures must be located a minimum of 150 feet landward of the upland edge or forested wetland edge of the inland wetland complex within the waterfowl and wading bird habitat;

(b) Beyond 150 feet from the upland edge or forested wetland edge of the inland wetland complex within the waterfowl and wading bird habitat, no more than 20 % of the applicant's land within the habitat may be cleared or developed;

(c) Within 150 feet of the upland edge or forested wetland edge of the inland wetland complex within the waterfowl and wading bird habitat, cutting and removal of vegetation is limited to those activities described in Paragraphs C(4)(a) and (b) of this section.

[1] *Guidelines for Municipal Shoreland Zoning Ordinances,* 06-096 CMR 1000(15)(P) (chapter last amended May 1, 2006).

(d) No construction or clearing activity may take place from April 15 through July 31 of any year unless otherwise approved by the Maine Department of Inland Fisheries and Wildlife.

(7) All work is limited to the location and extent depicted on the plan or plans submitted pursuant to subsection B(3) of this section.

D. Definitions. The following terms, as used in this chapter, have the following meanings, unless the context indicates otherwise.

(1) **Development area.** The area of property altered including, but not limited to, buildings, driveways, parking areas, wastewater disposal systems, lawns and other landscaped areas, as of June 8, 2006. "Developed area" has the same meaning as "development area".

(2) **Inland high or moderate value waterfowl and wading bird habitat**. A high to moderate value inland habitat is an inland wetland complex, and a 250 foot wide zone surrounding the wetland complex, that through a combination of dominant wetland type, wetland diversity, wetland size, wetland type interspersion, and the percent of open water meets IF&W guidelines or is an inland wetland complex that has documented outstanding use by waterfowl or wading birds. See Chapter 335(10)(A) for complete criteria.

(3) **Shorebird nesting, feeding, and staging areas**. Shorebird nesting, feeding, and staging areas, and a zone surrounding those areas as described in paragraphs (4) and (5), are significant wildlife habitats. Shorebird species include the members of the families Scolopacidae, Charadriidae, and Haematopodidae, including, but not limited to, sandpipers and plovers. See Chapter 335(11) for complete criteria.

(4) **Shorebird feeding area**. A shorebird feeding or staging area that is not a roosting area. The shorebird feeding area includes a 100-foot-wide surrounding buffer referred to as the feeding buffer.

(5) **Shorebird roosting area**. A shorebird feeding or staging area that is also a roosting area. The shorebird roosting area includes a 250-foot-wide surrounding buffer referred to as the roosting buffer.

(6) **Structure**. Anything built for the support, shelter or enclosure of persons, animals, goods or property of any kind, together with anything constructed or erected with a fixed location on or in the ground. Examples of structures include buildings, utility lines and roads.

NOTE: The significant wildlife habitats subject to this section are depicted on GIS data layers maintained by IF&W and available from either IF&W or the DEP.

STATUTORY AUTHORITY: 38 M.R.S.A., Section 480-H & 341-D(1)

EFFECTIVE DATE:
February 15, 1989

AMENDED:

March 23, 1991
April 11, 1992
May 19, 1992
May 1, 1995

EFFECTIVE DATE (ELECTRONIC CONVERSION):
May 4, 1996

NON-SUBSTANTIVE CORRECTIONS:
May 12, 1997 - punctuation, formatting, comparison with May 14, 1995 amendment
October 29, 1998 - APA Office Note added to first Section 5

AMENDED:
June 1, 1999
July 16, 1999 (EMERGENCY, expires October 14, 1999) - Section 10(A)
October 15, 1999 - language reverted to June 1, 1999 version
February 14, 2000 - Section 10

NON-SUBSTANTIVE CORRECTIONS:
November 23, 2000 - removed erroneous April 21, 1995 amendment date

AMENDED:
September 1, 2002

NON-SUBSTANTIVE CORRECTIONS:
September 5, 2002 - title of Section 2 only

AMENDED:
May 25, 2005 – filing 2005-174
December 5, 2006 – filing 2006-496
February 25, 2008 – Section 20 only, filing 2008-88
July 15, 2009 – filing 2009-339
July 30, 2011 – Section 16 only, filing 2011-211 *(Final adoption, major substantive)*
June 8, 2012 – filing 2012-146 *(Final adoption, major substantive)*

Applicant: General Public, State of Maine

Effective Date: October 12, 2010
Expiration Date: October 12, 2015

DEPARTMENT OF THE ARMY
GENERAL PERMIT
STATE OF MAINE

The New England District of the U.S. Army Corps of Engineers (Corps) hereby issues this General Permit (GP) for activities in waters of the United States (U.S.) that have no more than minimal individual, secondary, and cumulative adverse effects on the aquatic environment in waters of the U.S. within the boundaries of and off the coast of the State of Maine.

I. GENERAL CRITERIA

In order for activities to qualify for this GP, they must meet the GP's terms and eligibility criteria (Pages 1 – 4), general conditions (GC) (Pages 5 – 18), and Appendix A - Definition of Categories.

Under this GP, projects may qualify for the following:

- Category 1: Category 1 Notification Form required.
  (Submittal of the Category 1 Notification Form at Appendix B to the Corps is required.
- Category 2: Application required.
  (Submittal of an application to the Corps is required and written approval from the Corps must be received.

If your project is ineligible for Category 1, it may qualify for Category 2 or an Individual Permit and you must submit an application (see Page 3). The thresholds for Categories 1 and 2 are defined in Appendix A. This GP does not affect the Corps Individual Permit review process or activities exempt from Corps regulation.

II. ACTIVITIES COVERED:

- Work and structures that are located in, under or over any navigable water of the U.S.[1] that affect the course, location, condition, or capacity of such waters; or the excavating from or depositing of material in such waters. The Corps regulates this under Section 10 of the Rivers and Harbors Act of 1899);
- The discharge of dredged or fill material into waters of the U.S[2]. The Corps regulates this under Section 404 of the Clean Water Act (CWA).[3]
- The transportation of dredged material for the purpose of disposal in the ocean. The Corps regulates this under Section 103 of the Marine Protection, Research and Sanctuaries Act.

[1] Defined at 33 CFR 329 and Appendix A, Page 4.
[2] Defined at 33 CFR 328
[3] When there is a regulated discharge of dredged or fill material into waters of the U.S., the Corps will also consider secondary impacts, which are defined at Appendix A, Endnote/Definition 2.

III. PROCEDURES:

1. State Approvals

Applicants are responsible for applying for and obtaining any of the required state or local approvals (see GC 1, Page 5). Federal and state jurisdictions may differ in some instances. State permits may be required for specific projects regardless of the general permit category.

In order for authorizations under this GP to be valid, when any of the following state approvals or statutorily-required reviews is also required, the approvals must be obtained prior to the commencement of work in Corps jurisdiction.

- Maine Department of Environmental Protection (DEP): Natural Resources Protection Act (NRPA) permit, including permit-by-rule and general permit authorizations; Site Location of Development Act permit; and Maine Waterway Development and Conservation Act permit.
- Maine Department of Conservation: Land Use Regulation Commission (LURC) permit.
- Maine Department of Marine Resources: Aquaculture Leases.
- Maine Department of Conservation, Bureau of Parks and Lands, Submerged Lands: Lease

NOTE: This GP may authorize projects that are not regulated by the State of Maine (e.g., seasonal floats or moorings).

2. Corps Authorizations

a. <u>Category 1 (Submission of Category 1 Notification Form required)</u>

Eligibility Criteria

Activities in Maine that:

- Are subject to Corps jurisdiction (see GC 2, Page 5),
- Meet the terms and eligibility criteria of this GP (Pages 1 - 4),
- Meet all GCs of this GP (Pages 5 – 18), and
- Meet the definition of Category 1 in Appendix A - Definition of Categories,

may proceed without application to the Corps provided:

- The Category 1 Notification Form (Appendix B) is submitted to the Corps before starting the work authorized by this GP.

Consultation with the Corps and/or outside experts may be necessary to ensure compliance with this GP's general conditions (starting on Page 5) and related federal laws such as the National Historic Preservation Act, the Endangered Species Act (ESA), and the Wild and Scenic Rivers Act. For example, experts on historic resources may include the agencies and tribes referenced in GC 8, while experts on endangered species include the U.S. Fish and Wildlife Service (USFWS) and National Marine Fisheries Service (NMFS). Project proponents are encouraged to contact the Corps with Category 1 eligibility questions.

Work that is not regulated by the State of Maine, but is subject to Corps jurisdiction, is eligible for Category 1 authorization under this GP. The Maine DEP and LURC have waived WQC for projects authorized under Categories 1 and 2 of this GP. The state has concurred with the determination that projects authorized under Categories 1 and 2 of this GP are consistent with the enforceable policies of the Maine CZM Program.

b. Category 2 (Application to and written approval from the Corps required)

Eligibility Criteria
Activities in Maine that:

- Are subject to Corps jurisdiction (see GC 2, Page 5),
- Meet the terms of this GP (Pages 1 - 4),
- Meet all GCs of this GP (Pages 5 - 18),
- Meet the definition of Category 2 in Appendix A - Definition of Categories,

require an application to and written approval from the Corps. The Corps will coordinate review of Category 2 activities with federal and state agencies, as appropriate. To be eligible and subsequently authorized, an activity must result in no more than minimal impacts to the aquatic environment as determined by the Corps based on comments from the review team and the criteria listed above. This may require project modifications involving avoidance, minimization or compensatory mitigation for unavoidable impacts to ensure the net effects of a project are minimal. Compensatory mitigation for waterway/wetland impacts may take the form of wetland preservation, restoration, enhancement, creation, and/or "in-lieu fee" for inclusion into the Natural Resources Mitigation Fund. See www.nae.usace.army.mil/reg, "Mitigation" and then "Maine" for more information.

Work that is not regulated by the State of Maine, but is subject to Corps jurisdiction, is eligible for Category 2 authorization under this GP. The Maine DEP and LURC have waived WQC for projects authorized under Categories 1 and 2 of this GP. The state has concurred with the determination that projects authorized under Categories 1 and 2 of this GP are consistent with the enforceable policies of the Maine CZM Program.

3. Applying for a Permit

All applicants for Category 2 projects must:

a. Apply directly to the Corps using the state application form or the Corps application form (ENG Form 4345[1]), and apply directly to the state (DEP, LURC, BPL or DMR) as applicable using the appropriate state form, if the work is regulated by the Corps and the state.

b. Apply directly to the Corps using the Corps application form (ENG Form 4345[1]) if the work is regulated by the Corps but not the state (DEP, LURC, BPL or DMR).

c. Provide application information (see "Information Typically Required" in Appendix C) to help ensure the application is complete and to speed project review.

d. Submit a copy of their application materials to the Maine Historic Preservation Commission (MHPC) and the five Indian tribes listed at Appendix D, at the same time, or before, they apply to the state (DEP or LURC) or the Corps, to be reviewed for the presence of historic, archaeological or tribal resources in the permit area that the proposed work may affect. Submittals to the DEP or Corps shall include information to indicate that this has been done (a copy of the applicant's cover letter to MHPC and tribes or a copy of the MHPC and tribal response letters is acceptable).

[1] Located at www.nae.usace.army.mil/reg under "Forms."

4. Review Procedures

The Corps will coordinate review of all Category 2 activities with federal and state agencies, as appropriate, to ensure that the work will result in no more than a minimal impact to the aquatic environment. Applicants are responsible for applying for the appropriate state and local approvals listed on Page 2.

Emergency Procedures: 33 CFR 325.2(e)4 states that an "emergency" is a situation which would result in an unacceptable hazard to life, a significant loss of property, or an immediate, unforeseen, and significant economic hardship if corrective action requiring a permit is not undertaken within a time period less than the normal time needed to process the application under standard procedures." The Corps will work with all applicable agencies to expedite authorization according to established procedures in emergency situations.

Individual Permit Procedures: Proponents of work that does not meet the terms and general conditions of this GP must submit the Corps application form and the appropriate application materials to the Corps at the earliest possible date in order to expedite the Individual Permit review process. General information and application forms can be obtained at our website or by calling us (see Appendix D). Individual WQC and CZM consistency concurrence are required when applicable from the State of Maine before Corps permit issuance. The Corps encourages applicants to concurrently apply for a Corps Individual Permit and state permits.

5. Approval Process

Applicants for Category 2 activities may not proceed with work in Corps jurisdiction until written authorization is received from the Corps. If the Corps determines that the Category 2 activity is eligible for the GP, the Corps will send an authorization letter directly to the applicant. The Corps will attempt to issue a written eligibility determination within the state's review period. If the Corps determines that the activity is not eligible under the GP or that additional information is required, the Corps will notify the applicant in writing and send a copy to the DEP or LURC. Applicants are responsible for obtaining all applicable approvals listed on Page 2 from the appropriate state and local agencies before commencing work in Corps jurisdiction.

V. GENERAL PERMIT CONDITIONS:

The following conditions apply to activities authorized under this Maine GP, unless otherwise specified, including all Category 1 (notification required) and Category 2 (application required) activities:

1. Other Permits. Authorization under this GP does not obviate the need to obtain other federal, state, or local authorizations required by law. This includes, but is not limited to, the project proponent obtaining a Flood Hazard Development Permit issued by the town, if necessary. Inquiries may be directed to the municipality or to the Maine Floodplain Management Coordinator at (207) 287-8063. See www.maine.gov/spo/flood.

2. Federal Jurisdictional Boundaries.
(a) Applicability of this GP shall be evaluated with reference to federal jurisdictional boundaries. Applicants are responsible for ensuring that the boundaries used satisfy the federal criteria defined at 33 CFR 328 "Waters of the U.S." and 33 CFR 329 "Navigable Waters of the U.S."
Note: Waters of the U.S. include the subcategories "navigable waters of the U.S." and "wetlands."
(b) For Category 1 projects, proponents are not required to delineate the waters of the U.S. that they plan to impact, but must approximate the square footage of impacts in order to determine the review category (1 or 2 or Individual Permit). For projects filling <15,000 SF of waters of the U.S. that do not qualify for Category 1 (e.g., vernal pool, secondary or endangered species impacts, etc.) and therefore require an application to the Corps, and for those filling ≥15,000 SF, applicants shall delineate all waters of the U.S. that will be filled (direct impacts) in accordance with the Corps of Engineers Wetlands Delineation Manual and the most recent regional supplements (see Appendix E). In addition, applicants shall approximately identify all waters of the U.S. on the property and known waters adjacent to the property in order for the Corps to evaluate secondary impacts. The waters of the U.S. shall be clearly shown on the project plans submitted with the application. This includes all waters of the U.S. in areas under DEP or LURC jurisdiction regardless of whether they're shown on LURC zoning maps.
(c) On a case-by-case basis, the Corps may modify/refine the above delineation and identification requirements for waters of the U.S.

3. Minimal Direct, Secondary and Cumulative Impacts.
(a) Projects authorized by this GP shall have no more than minimal direct, secondary and cumulative adverse environmental impacts. Category 2 applicants should provide information on secondary and cumulative impacts as stated in Appendix C. Compensatory mitigation may be required to offset unavoidable impacts (see GC 16) and to ensure that they are no more than minimal. Compensatory mitigation requirements will be determined on a case-by-case basis.
(b) Secondary impacts to waterway and/or wetland areas, (e.g., areas drained, flooded, cleared, excavated or fragmented) shall be added to the total fill area when determining whether the project qualifies for Category 1 or 2. Direct, secondary and cumulative impacts are defined at Appendix A, Endnote 2.
(c) Site clearing, grading and construction activities in the upland habitat surrounding vernal pools ("Vernal Pool Management Areas") are secondary impacts. See GC 28 for avoidance and minimization requirements and recommendations.

4. Discretionary Authority. Notwithstanding compliance with the terms and conditions of this permit, the Corps retains discretionary authority to require Category 2 or Individual Permit review based on concerns for the aquatic environment or for any other factor of the public interest [33 CFR

320.4(a)]. This authority is invoked on a case-by-case basis whenever the Corps determines that the potential consequences of the proposal warrant a higher level of review based on the concerns stated above. This authority may be invoked for projects that may contribute to cumulative environmental impacts that are more than minimal or if there is a special resource or concern associated with a particular project that is not already covered by the remaining conditions of the GP and that warrants greater review. Whenever the Corps notifies an applicant that an Individual Permit may be required, the project is not authorized under this GP and no work may be conducted until an Individual Permit is obtained or until the Corps notifies the applicant that further review has demonstrated that the work may proceed under this GP.

5. Single and Complete Projects.
(a) This GP shall not be used to piecemeal work and shall be applied to single and complete projects[1]. When determining the review category in Appendix A (Category 1 or 2) for a single and complete project, proponents must include any permanent historic fill placed since October 1995 that is associated with that project and all currently proposed temporary and permanent impact areas.
(b) A single and complete project must have independent utility[1].
(c) Unless the Corps determines the activity has independent utility[1]:
i. This GP shall not be used for any activity that is part of an overall project for which an Individual Permit is required,
ii. All components of a single project and/or all planned phases of a multi-phased project (e.g., subdivisions should include all work such as roads, utilities, and lot development) shall be treated together as constituting one single and complete project[1].
(d) For linear projects, such as power lines or pipelines with multiple crossings, the single and complete project[1] is all crossings of a single water of the U.S. (i.e., single waterbody) at a specific location. For linear projects crossing a single waterbody several times at separate and distant locations, each crossing is considered a single and complete project. However, individual channels in a braided stream or river, or individual arms of a large, irregularly-shaped wetland or lake, etc., are not separate waterbodies and crossings of such features cannot be considered separately. If any crossing requires a Category 2 activity, then the entire linear project shall be reviewed as one project under Category 2.

6. Permit On-Site. For Category 2 projects, the permittee shall ensure that a copy of this GP and the accompanying authorization letter are at the work site (and the project office) authorized by this GP whenever work is being performed, and that all personnel with operation control of the site ensure that all appropriate personnel performing work are fully aware of its terms and conditions. The entire permit authorization shall be made a part of any and all contracts and sub-contracts for work that affects areas of Corps jurisdiction at the site of the work authorized by this GP. This shall be achieved by including the entire permit authorization in the specifications for work. The term "entire permit authorization" means this GP and the authorization letter (including its drawings, plans, appendices and other attachments) and also includes permit modifications. If the authorization letter is issued after the construction specifications, but before receipt of bids or quotes, the entire permit authorization shall be included as an addendum to the specifications. If the authorization letter is issued after receipt of bids or quotes, the entire permit authorization shall be included in the contract or sub-contract. Although the permittee may assign various aspects of the work to different contractors or sub-contractors, all contractors and sub-contractors shall be obligated by contract to comply with all environmental protection provisions contained within the entire GP authorization, and no contract or sub-contract shall require or allow unauthorized work in areas of Corps jurisdiction.

[1] Single and Complete Project and Independent Utility are defined at Appendix E.

7. St. John/St. Croix Rivers. Work within the Saint John and Saint Croix River basins that requires approval of the International Joint Commission is not eligible for Category 1 and an application to the Corps is required if any temporary or permanent use, obstruction or diversion of international boundary waters could affect the natural flow or levels of waters on the Canadian side of the line; or if any construction or maintenance of remedial works, protective works, dams, or other obstructions in waters downstream from boundary waters could raise the natural level of water on the Canadian side of the boundary.

8. Historic Properties. No activity otherwise authorized by this GP shall result in effects (as that term is defined at 36 C.F.R. § 800.16(i)) on properties listed on, determined to be eligible for listing on, or potentially eligible for listing on the National Register of Historic Places, including previously unidentified properties, unless and until the Corps or another federal agency has satisfied the consultation requirements of Section 106 of the National Historic Preservation Act. Work is not eligible for Category 1 and an application to the Corps is required if the activity may have the potential to cause effects to any historic properties listed, determined to be eligible for listing on, or potentially eligible for listing on the National Register of Historic Places, including previously unidentified properties. Work is eligible for Category 1 if a no effect or no adverse effect determination has been made for that work by another federal action agency in its Section 106 consultation with the Maine Historic Preservation Commission (MHCP) and the five federally recognized Indian tribes listed at Appendix D. Information on the location and existence of known historic resources can be obtained from the MHPC, the National Register of Historic Places, and the five tribes listed in Appendix D. Historic properties include those that are eligible for inclusion, but not necessarily listed on the National Register. If the permittee, either prior to construction or during construction of the work authorized herein, encounters a previously unidentified archaeological or other cultural resource within the area subject to Corps jurisdiction that might be eligible for listing in the National Register of Historic Places, he/she shall stop work and immediately notify the Corps and the MHPC and/or applicable tribe(s).

9. National Lands. None of the following work is eligible as a Category 1 project**:**
(a) Activities that impinge upon the value of any National Wildlife Refuge, National Forest, National Marine Sanctuary, National Park or any other area administered by the National Park Service, U.S. Fish and Wildlife Service (USFWS) or U.S. Forest Service.
(b) Work on Corps properties and Corps-controlled easements. Contact the Corps, Real Estate Division (978) 318-8585 to initiate reviews about both Corps holdings and permit requirements.
(c) Any proposed temporary or permanent modification or use of a federal project (including but not limited to a levee, dike, floodwall, channel, sea wall, bulkhead, jetty, wharf, pier, or other work built but not necessarily owned by the United States), which would obstruct or impair the usefulness of the federal project in any manner, and/or would involve changes to the authorized federal project's scope, purpose, and/or functioning that go beyond minor modifications required for normal operation and maintenance (requires review and approval by the Corps pursuant to 33 USC 408). Federal projects in Maine as of October 2010 are shown at Appendix F. This map may not be inclusive of all projects.

10. Endangered Species.
(a) No activity may be authorized under Category 1 of this GP which:
i. "May affect" a threatened or endangered species, a species proposed for listing as threatened or endangered, or designated or proposed critical habitat (all herein referred to as "listed species or habitat") as identified under the federal Endangered Species Act (ESA) (unless specified in a programmatic agreement with NMFS or USFWS),

ii. Results in a "take" of any federally-listed threatened or endangered species of fish or wildlife, or

iii. Results in any other violation of Section 9 of the ESA protecting threatened or endangered species of plants.

(b) Work in Inland Waters and Wetlands[1] and the non-tidal portions of Navigable Waters[2] (e.g., the Penobscot River, Kennebec River) is not eligible for Category 1 if:

i. The project action area occurs within a watershed occupied by listed Atlantic salmon or shortnose sturgeon. Project proponents must check the site in Footnote 3 below.

ii. In areas outside these watersheds contact the USFWS (see Appendix D, Page 1 for contact information) to check for the presence of other listed species.

(c) Work in the tidal portions of Navigable Waters may be eligible for Category 1. Reference Appendix A, II. Navigable Waters, Pages 4 – 9, and the other terms and general conditions (GC 11 is particularly relevant) of this GP to determine Category 1 eligibility. Project proponents must contact the USFWS (see Appendix D, Page 1 for contact information) to ensure that work in all tidal portions of Navigable Waters[2] is not in critical habitat or areas occupied by listed species other than Atlantic salmon or shortnose sturgeon.

(d) Although some work is excluded from Category 1 as stated in (b) and (c) above, work may qualify for Category 1 if a no effect determination has been made for that work by a federal action agency such as the Corps.

(e) Proponents must submit an application to the Corps if any of the activities in 10(a)-10(c) that do not qualify for Category 1 may occur and provide information on federally-listed species or habitat to allow the Corps to conduct any required consultation under Section 7 of the ESA.

(f) The Corps review may consider species listed as endangered and threatened pursuant to Maine state law.

11. Essential Fish Habitat. Any work in the following rivers and streams, including all tributaries to the extent that they are currently or were historically accessible for salmon migration, shall not be authorized under Category 1 of the GP and must be screened for potential impacts to EFH (see Appendix E for more information).

Androscoggin River	Aroostook River	Boyden River	Dennys River
Ducktrap River	East Machias River	Hobart Stream	Kennebec River
Machias River	Narraguagus River	Orland River	Passagassawaukeag River
Patten Stream	Penobscot River	Pleasant River	Presumpscot River
Saco River	Sheepscot River	St. Croix River	Tunk Stream
			Union River

The above does not apply to the following activities which may qualify for Category 1 work:

- Exploratory drilling and borings for bridges.
- Moorings (see Appendix A, Page 6 for Category 1 thresholds and requirements)
- Structures and floats (see Appendix A, Page 7 for Category 1 thresholds and requirements)
- Other activities specified in a programmatic agreement with NMFS.

---

[1] See Appendix A, Page 1 for definition.

[2] See Appendix A, Page 4 for definition.

[3] For areas considered occupied by listed Atlantic salmon and/or shortnose sturgeon in Inland Waters and Wetlands, and in Navigable Waters, see: www.nero.noaa.gov/prot_res/altsalmon/dpsmaps.html. Tidal portions of navigable waters occupied by listed Atlantic salmon are more specifically described as those waters from the Kennebec River to its mouth at Merrymeeting Bay, northeast to the Dennys River, including the Androscoggin River upstream to the Brunswick Dam, and other streams northeast of this line to the limit of their tidal reaches.

12. Wild and Scenic Rivers. Any activity that occurs in the designated main stem of, within 0.25 mile up or downstream of the designated main stem of, or in tributaries within .25 miles of the designated main stem of a National Wild and Scenic River, or in "bordering and contiguous wetlands" (see Appendix A, Endnote 1) that are adjacent to the designated main stem of a National Wild and Scenic River, or that has the potential to alter flows within a river within the National Wild and Scenic River System, is not eligible for Category 1 regardless of size of the impacts. This condition applies to both designated Wild and Scenic Rivers and rivers officially designated by Congress as study rivers for possible inclusion while such rivers are in an official study status. National Wild and Scenic Rivers System segments for Maine as of October 2010 include: Allagash River beginning at Telos Dam continuing to Allagash checkpoint at Eliza Hole Rapids, approximately 3 miles upstream of the confluence with the St. John River (length = 92 miles).

13. Federal Navigation Project. Any structure or work that extends closer to the horizontal limits of any Corps Federal Navigation Project (see Appendix F) than a distance of three times the project's authorized depth shall be subject to removal at the owner's expense prior to any future Corps dredging or the performance of periodic hydrographic surveys. This is applicable to Category 1 and 2. Reference Appendix A, Page 6 (Moorings) and Page 7 (Structure and Floats).

14. Navigation.
(a) There shall be no unreasonable interference with navigation by the existence or use of the activity authorized herein and no attempt shall be made by the permittee to prevent the full and free use by the public of all navigable waters at or adjacent to the activity authorized herein.
(b) The permittee understands and agrees that, if future U.S. operations require the removal, relocation, or other alteration, of the structure or work herein authorized, or if, in the opinion of the Secretary of the Army or his authorized representative, said structure or work shall cause unreasonable obstruction to the free navigation of the navigable waters, the permittee will be required, upon due notice from the Corps, to remove, relocate, or alter the structural work or obstructions caused thereby, without expense to the U.S. No claim shall be made against the U.S. on account of any such removal or alteration.

15. Federal Liability. In issuing this permit, the Federal Government does not assume any liability for the following: (a) damages to the permitted project or uses thereof as a result of other permitted or unpermitted activities or from natural causes; (b) damages to the permitted project or uses thereof as a result of current or future activities undertaken by or on behalf of the U.S. in the public interest; (c) damages to persons, property, or to other permitted or unpermitted activities or structures caused by the activity authorized by this permit; (d) design or construction deficiencies associated with the permitted work; (e) damage claims associated with any future modification, suspension, or revocation of this permit.

16. Avoidance, Minimization and Compensatory Mitigation.
Discharges of dredged or fill material into waters of the U.S., including wetlands, shall be avoided and minimized to the maximum extent practicable through consideration of alternatives. The Corps may require compensatory mitigation of unavoidable direct and secondary impacts associated with Category 2 projects on a case-by-case basis (see Appendix E).

17. Heavy Equipment in Wetlands. Operating heavy equipment other than fixed equipment (drill rigs, fixed cranes, etc.) within wetlands shall be minimized, and such equipment shall not be stored, maintained or repaired in wetlands, to the maximum extent practicable. Where construction requires heavy equipment operation in wetlands, the equipment shall either have low ground pressure

(typically <3 psi), or it shall be placed on swamp/construction/timber mats (herein referred to as "construction mats" and defined at Appendix A, Endnote 4) that are adequate to support the equipment in such a way as to minimize disturbance of wetland soil and vegetation. Construction mats are to be placed in the wetland from the upland or from equipment positioned on swamp mats if working within a wetland. Dragging construction mats into position is prohibited. Other support structures that are capable of safely supporting equipment may be used with written Corps authorization (Category 2 authorization or Individual Permit). Similarly, the permittee may request written authorization from the Corps to waive use of mats during frozen, dry or other conditions. An adequate supply of spill containment equipment shall be maintained on site.

18. Temporary Fill.
Temporary fill that qualifies for Category 1 (e.g., <15,000 SF of combined temporary and permanent fill associated with the single and complete project) or is authorized in writing under Category 2, shall adhere to the following:
(a) All temporary fill shall be stabilized to prevent its eroding into portions of waters of the U.S., including wetlands, where it is not authorized.
(b) Unconfined temporary fill authorized for discharge into waters of the U.S., including wetlands, shall consist of material that minimizes impacts to water quality (e.g. sandbags, clean gravel, stone, aggregate, etc.).
(c) Temporary fill authorized for discharge into wetlands should be placed on geotextile fabric or other material (e.g., straw) laid on the pre-construction wetland grade where practicable to minimize impacts.
(d) Temporary fill shall be removed as soon as it is no longer needed, disposed of at an upland site, and suitably contained to prevent subsequent erosion into waters of the U.S, including wetlands.
To qualify for Category 1, temporary fill placed during the:

i. Growing season must be removed before the beginning of the next growing season.
ii. Non-growing season may remain throughout the following growing season, but must be removed before the beginning of the next growing season.

(e) Waters of the U.S., including wetlands, where temporary fill was discharged shall be restored (see GC 19).
(f) Appropriate measures must be taken to maintain normal downstream flows and minimize flooding to the maximum extent practicable, when temporary structures, work, and discharges, including cofferdams, are necessary for construction activities, access fills, or dewatering of construction sites. Temporary fills must be placed in a manner that will not be eroded by expected high flows (see GC 21).
(g) Construction mats and corduroy roads (see GC 17 above) are considered as temporary fill when they are removed immediately upon work completion. The area must be restored (see GC 19).

19. Work Site Restoration.
(a) Wetland areas where permanent disturbance is not authorized shall be restored to their original condition and elevation, which under no circumstances shall be higher than the pre-construction elevation. Original condition means careful protection and/or removal of existing soil and vegetation, and replacement back to the original location such that the original soil layering and vegetation schemes are approximately the same, unless otherwise authorized.
(b) Upon completion of construction, all disturbed wetland areas (the disturbance of these areas must be authorized) shall be properly stabilized. Any seed mix shall contain only plant species native to New England and shall not contain any species listed in the "Invasive and Other Unacceptable Plant Species" Appendix in the "New England District Compensatory Mitigation Guidance" (see Appendix E, Paragraph 6). This list may be updated periodically.
(c) In areas of authorized temporary disturbance, if trees are cut they shall be cut at ground level and

not uprooted in order to prevent disruption to the wetland soil structure and to allow stump sprouts to revegetate the work area, unless otherwise authorized.

20. Bank Stabilization.
(a) Projects involving construction or reconstruction/maintenance of bank stabilization structures within Corps jurisdiction shall be designed to minimize environmental effects, effects to neighboring properties, scour, etc. to the maximum extent practicable.
(b) Project proponents must design and construct bank stabilization projects using this sequential minimization process: avoidance of aquatic resource impacts, diversion of overland flow, vegetative stabilization, stone-sloped surfaces, and walls/bulkheads. Vertical walls/bulkheads shall only be used in situations where reflected wave energy can be tolerated. Refer to Appendix E for design guidance.
(c) Inland Water bank stabilization activities necessary for erosion prevention must meet all of the following criteria: **(i)** No material is placed in excess of the minimum needed for erosion protection; **(ii)** The activity is no more than 500 feet in length along the bank; **(iii)** The activity will not exceed an average of one cubic yard per running foot placed along the bank below the plane of the ordinary high water mark; **(iv)** Structures angled steeper than 1H:1V and any material other than angular or subangular stone or fiber roll revetments require at least a Category 2 review. **(v)** The activity does not involve discharges of dredged or fill material into special aquatic sites; **(vi)** No material is of the type, or is placed in any location, or in any manner, to impair surface water flow into or out of any water of the U.S.; **(vii)** No material is placed in a manner that will be eroded by normal or expected high flows (properly anchored trees and treetops may be used in low energy areas); and, **(viii)** The activity is not a stream channelization activity.
(d) Navigable Water bank stabilization activites are provided at Appendix A, Page 4.

21. Sedimentation and Erosion Control.
(a) Adequate sedimentation and erosion control management measures, practices and devices, such as phased construction, installation of sediment control barriers (i.e. silt fence, vegetated filter strips, geotextile silt fences, erosion control mixes, hay bales or other devices) downhill of all exposed areas, retention of existing vegetated buffers, application of temporary mulching during construction, and permanent seeding and stabilization shall be installed and properly maintained to reduce erosion and retain sediment on-site during and after construction. They shall be capable of preventing erosion, of collecting sediment, suspended and floating materials, and of filtering fine sediment.
(b) Temporary sediment control barriers shall be removed upon completion of work, but not until all disturbed areas are permanently stabilized. The sediment collected by these sediment barriers shall be removed and placed at an upland location and stabilized to prevent its later erosion into a waterway or wetland.
(c) All exposed soil and other fills shall be permanently stabilized at the earliest practicable date (see GC 19).

22. Stream Work and Crossings[1].

Notes:

(a) GC 22(a) and (b) apply to Inland Waters and Wetlands (see Appendix A, Page 1 for definition) and Navigable Waters (see Appendix A, Page 4 for definition). GC 22(c)-(l) only apply to Inland Waters and Wetlands that are streams. All new and replacement crossings in Navigable Waters require an application to the Corps and at least a Category 2 review.

(b) In-stream work in a watershed occupied by listed Atlantic salmon or shortnose sturgeon [see GC 10(b)] and some stream work such as crossings on EFH waters (see GC 11) is not eligible for Category 1.

(c) "High-Quality Stream Segments" are shown at www.maine.gov/dep/gis/datamaps and may be useful in evaluating impacts to fisheries. GIS shape files are under "Other Google Earth Interactive Maps" and PDFs by county are under "DEP GIS Maps." See Appendix E, 8(b) for more information.

Conditions:

(a) All permanent crossings of rivers, streams, brooks, etc. (hereon referred to as "streams") shall be suitably culverted, bridged, or otherwise designed to **i)** withstand and to prevent the restriction of high flows to qualify for Category 1, and **ii)** not obstruct the movement of or not substantially disrupt the necessary life-cycle movements of those species of aquatic life indigenous to the waterbody, including those species that normally migrate through the area, beyond the actual duration of construction unless the activity's primary purpose is to impound water to qualify for Category 1 or 2. (NOTE: Areas of fill and/or cofferdams must be included in total waterway/wetlands impacts to determine applicability of this GP).

(b) Any work that temporarily or permanently impacts upstream or downstream flood conditions, or permanently impacts wetlands in excess of Category 1 thresholds, must be reviewed at least under Category 2. See the documents referenced in Appendix E, 8(c) and (d) for guidance.

(c) New Stream Crossings. For new stream crossings to qualify for Category 1:

i. Must ensure compliance with GC 22(a) and GC 22(b) above.

ii. Shall be designed and constructed in accordance with the Corps General Stream Crossing Standards provided on Page 14 and the stream simulation document listed at Appendix E, 8(a).

(d) Replacement Stream Crossings. For replacement stream crossings to qualify for Category 1:

i. Must ensure compliance with GC 22(a) and GC 22(b) above.

ii. Shall be designed and constructed in accordance with the Corps General Stream Crossing Standards provided on Page 14 and the stream simulation document listed at Appendix E, 8(a).

(e) Culvert Extensions. Culvert extensions on culverts that do not meet the Corps General Stream Crossing Standards do not qualify for Category 1 and require an application to the Corps at least as a Category 2 project.

(f) Temporary Stream Crossings.

Note: The General Stream Crossing Standards don't apply to temporary stream crossings.

i. Temporary stream crossings or cofferdams shall be used for equipment access across streams [see Appendix E, 8(e)]. Note: Areas of fill and/or cofferdams must be included in total waterway/wetlands impacts to determine the review category in Appendix A.

ii. Temporary stream crossings shall be removed within 180 days to qualify for Category 1.

iii. Temporary stream crossings that are not spans[2] (typically culverts) must be designed in accordance with 1-6 below to qualify for Category 1. Category 2 applications should include information demonstrating 2-6 below:

---

[1] This condition does not apply to non-tidal drainage systems and irrigation ditches excavated on dry land.

[2] For the purposes of this GP, spans are bridges, three-sided box culverts, open-bottom culverts or arches that span the stream with footings landward of bankfull width.

1. Installed and removed during the low flow period specified in GC 22(l) below.

2. Placed on geotextile fabric or other material where practicable to ensure restoration to the original grade. Soil may not be used to construct or stabilize these structures and rock must be large enough to allow for easy removal without disrupting the streambed.

3. Designed and maintained to withstand and pass high flows. Water height should be no higher than the top of the culvert's inlet. A minimum culvert diameter of two feet is required to pass debris. Culverts must be aligned to prevent bank erosion or streambed scour.

4. Equipped with energy dissipating devices installed downstream if necessary to prevent scour.

5. Designed and maintained to prevent soil from entering the waterbody.

6. Removed upon the completion of work. Impacts to the streambed or banks requires restoration to their original condition using stream simulation methods[1].

(g) Slip Lining. Work using slip lining (retrofitting an existing culvert by inserting a smaller diameter pipe), invert lining, or resulting in decreased diameter, do not qualify for Category 1, either as new work or maintenance activities.

(h) Work in Flowing Waters. To qualify for Category 1, no unconfined fill [see GC 18(b)] or excavation in flowing waters is allowed. To accomplish this:

i. Bank stabilization work below ordinary high water (OHW) shall utilize erosion controls such as inflatable cofferdams, jersey barrier, silt screen, turbidity curtain, etc. where practicable to prevent sediment input to the stream and to minimize turbidity and sedimentation impacts for sensitive life stages. Bank stabilization above OHW must utilize erosion controls.

ii. Management techniques such as temporary flume pipes, culverts, cofferdams, etc. must be used to maintain normal flows within the stream boundary's confines, or water diversions may be used immediately up and downstream of the work footprint (see Appendix A, Endnote 6) or work must be performed in the dry under no flow conditions, or under very low flow conditions following the practices in GC 22(a).

(i) Minimization. In order to make the Category 2 review process more efficient and result in a faster decision, new and replacement stream crossings should be designed using the least intrusive and environmentally damaging method following this sequential minimization process: 1) spans with no stream impacts, 2) spans with stream impacts, and 3) embedded culverts with stream simulation or low-slope design.

(j) Maintenance Requirements. The permittee shall maintain the work authorized herein in good condition and in conformance with the terms and general conditions of this permit to facilitate aquatic life passage as stated in GC 22(a). Culverts that develop "hanging" inlets or outlets, result in bed washout, or a stream that doesn't match the characteristics of the substrate in the natural stream channel such as mobility, slope, stability confinement will require maintenance or repair to comply with this GC. This does not apply to GC 22(f) above.

(k) Maintenance and Replacement Information. An existing stream crossing must be authorized and in compliance with all conditions of its authorization(s) to qualify for maintenance not subject to regulation. See Appendix A, Endnote 7. A non-serviceable crossing is not eligible for maintenance and is therefore considered as a replacement crossing [see 22(d)].

(l) Work Window. For projects that otherwise meet the terms of Category 1, in-stream construction work shall be conducted during the low flow period July 15 - October 1 in any year. Projects that are not to be conducted during that time period are ineligible for Category 1 and shall be screened pursuant to Category 2, regardless of the waterway and wetland fill and/or impact area.

(See next page for Corps General Stream Crossing Standards.)

[1] Design and construction shall be in accordance with the stream simulation document listed at Appendix E, 8(a).

Corps General Stream Crossing Standards (required for Category 1, recommended for Category 2):
(a) Culverts must be embedded:

- ≥ 2 feet for box culverts and other culverts with smooth internal walls,
- ≥ 1 foot for corrugated pipe arches
- ≥ 1 foot and at least 25 percent for corrugated round pipe culverts

(b) For new crossings, spans[1] are required to avoid or cause minimal disruption to the streambed and to meet the requirements of General Condition 22(a) and 22(b). Footings and abutments must be landward of 1.2 times bankfull width. To the greatest extent practicable, work in the stream shall be minimized, and design and construction shall allow the streambed's natural structure and integrity to remain intact. Any fill or excavation of the streambed below bankfull width other than footings, support pilings, or work specified in 22(h)ii requires Category 2 review and, unless demonstrated otherwise, stream simulation[2] to establish substrate and banks in the span structure and work area as specified in (d) and (e) below.
(c) For replacement crossings, spans[1] are required to meet the requirements of General Condition 22(a) and 22(b). Footings and abutments shall be landward of 1.2 times bankfull width. Unless demonstrated otherwise, stream simulation[2] is required to establish substrate and banks in the span structure and work area as specified in (d) and (e) below.
(d) Crossings must have a natural bottom substrate within the structure matching the characteristics of the substrate in the natural stream channel and the banks (mobility, slope, stability, confinement, grain and rock size)[2] at the time of construction and over time as the structure has had the opportunity to pass significant flood events. To allow terrestrial passage for wildlife and prevent undermining the footings, crossings shall have a bank on both sides of the stream matching the horizontal profile of the existing stream and banks[2].
(e) Crossings must be designed and constructed[2] with appropriate bed forms and streambed characteristics so that water depths and velocities are comparable to those found in the natural channel at a variety of flows. In order to provide appropriate water depths and velocities at a variety of flows and especially low flows, it is usually necessary to reconstruct the streambed or preserve the natural channel within the structure. Otherwise, the width of the structure needed to accommodate higher flows will create conditions that are too shallow at low flows. The grain and rock size, and arrangement of streambed materials within the structure should be in accordance with (d) above. Flows could go subsurface within the structure if only large material is used without smaller material filling the voids.

23. Wetland Crossings.
(a) All temporary and permanent crossings of wetlands shall be suitably culverted, bridged, or otherwise designed to: **i)** Withstand and prevent the restriction of high flows, **ii)** Not obstruct the movement of or not substantially disrupt the necessary life-cycle movements of those species of aquatic life indigenous to the wetland, including those species that normally migrate through the area, beyond the actual duration of construction unless the activity's primary purpose is to impound water. See Appendix E for the Maine DEP's crossing standards.
(b) To qualify for Category 1, new and replacement wetland crossings that are permanent shall be culverted, spanned or bridged in such a manner as to preserve hydraulic and ecological connectivity, at its present level, between the wetlands on either side of the road. To meet this requirement, we

[1] For the purposes of this GP, spans are bridges, three-sided box culverts, open-bottom culverts or arches that span the stream with footings landward of bankfull width.
[2] Design and construction shall be in accordance with the stream simulation document listed at Appendix E, 8(a).

recommend that culverts, spans or bridges be placed at least every 50 feet with an opening at least 2 feet high and 3 feet wide at ground level where practicable. Closed bottom culverts shall be embedded at least 6 inches with a natural bottom.
(c) In the case of non-compliance, the permittee shall take necessary measures to correct wetland damage due to lack of hydraulic and ecological connectivity.
(d) Any work that results in flooding, results in impacts to wetlands on either side of the wetland crossing in excess of Category 1 thresholds, or impacts wetland drainage from the upgradient side of the wetland crossing does not qualify for Category 1.

24. Discharge of Pollutants.
(a) All activities involving any discharge of pollutants into waters of the U.S., including wetlands, authorized under this GP shall be consistent with applicable water quality standards, effluent limitations, standards of performance, prohibitions, and pretreatment standards and management practices established pursuant to the Clean Water Act (CWA) (33 USC 1251), and applicable state and local laws. If applicable water quality standards, limitations, etc., are revised or modified during the term of this GP, the authorized work shall be modified to conform with these standards within six months of the effective date of such revision or modification, or within a longer period of time deemed reasonable by the Corps in consultation with the EPA. Issuance of a LURC or DEP NRPA permit confirms that state water quality standards are met.
(b) All projects authorized by this GP shall be designed, constructed and operated to minimize or eliminate the discharge of pollutants.
(c) All activities involving any discharge of pollutants into waters of the U.S., including wetlands, authorized under this GP must comply with Section 402 [33 U.S.C. 1342] of the CWA and the requirements of the National Pollutant Discharge Elimination System (40 CFR 122).

25. Spawning, Breeding and Migratory Areas. Activities and impacts such as excavations, discharges of dredged or fill material, and/or suspended sediment producing activities, in fish migratory areas, fish and shellfish spawning or nursery areas, or amphibian and migratory bird breeding areas, during spawning or breeding seasons shall be avoided and minimized to the maximum extent practicable.

26. Storage of Seasonal Structures. Coastal structures, such as pier sections and floats, that are removed from the waterway for a portion of the year (often referred to as seasonal structures) shall be stored in an upland location located above mean high water (MHW) and not in tidal wetlands or mudflats. These seasonal structures may be stored on the fixed, pile-supported portion of the structure that is seaward of MHW. This is intended to prevent structures from being stored on the marsh substrate, mudflats, or the substrate seaward of MHW. Seasonal storage of structures in navigable waters, e.g., in a protected cove on a mooring, requires Corps and local harbormaster approval.

27. Environmental Functions and Values. The permittee shall make every reasonable effort to carry out the construction or operation of the work authorized herein in a manner that maintains as much as is practicable, and minimize any adverse impacts on existing fish, wildlife, and natural environmental functions and values.

28. Protection of Vernal Pools (VPs).
(a) Impacts to VP Management Areas[1] for all VPs on, and known VPs surrounding, the project site shall be minimized to the maximum extent practicable.
(b) The following management practices must be followed for all work within the VP Management Area (750' of a VP's edge) of all VPs in order to qualify for Category 1 when there is fill placed in a water of the U.S., including wetlands:

- **i.** Similar to the DEP's Significant Wildlife Habitat regulations[2]:
  1. No disturbance within the VP Depression or VP Envelope (area within 100 feet of the VP Depression's edge)[3];
  2. Maintain a minimum of 75% of the Critical Terrestrial Habitat (area within 100-750 feet of the VP Depression's edge) as unfragmented forest with at least a partly-closed canopy of overstory trees to provide shade, deep litter and woody debris[3];
  3. Maintain or restore forest corridors connecting wetlands and significant vernal pools;
  4. Minimize forest floor disturbance; and
  5. Maintain native understory vegetation and downed woody debris.
- **ii.** Cape Cod style-curbing or no curbing options shall be used on new roads to facilitate amphibian passage[2].

(c) For work not complying with the requirements in (b) above, applicants shall submit an application to the Corps for at least Category 2 review with information on directional buffers in accordance with the VP Directional Buffer Guidance document[2]. Conservation of the unimpacted area within the VP Management Area will often be required.
(d) GC 2 requires applicants to delineate or approximately identify on the project plans all waters of the U.S., which include vernal pools. Appendix A, Page 1 lists VP Category 1 thresholds.

29. Invasive Species.
(a) The introduction, spread, or the increased risk of invasion of invasive plant or animal species on the project site, into new or disturbed areas, or areas adjacent to the project site caused by the site work is prohibited (see Appendix E, Paragraph 6).
(b) Unless otherwise directed by the Corps, all applications for Category 2 inland projects and Category 2 coastal fill projects proposing fill in Corps jurisdiction shall include an Invasive Species Control Plan (ISCP) (see Appendix E, Paragraph 6).

30. Cranberry Development Projects. For cranberry development projects authorized under the GP, the following conditions apply:
(a) If a cranberry bog is abandoned for any reason, the area must be allowed to revert to natural wetlands unless an Individual Permit is obtained from the Corps allowing the discharge of fill for an alternate use.

---

[1] The Corps VP Management Area, which includes the VP and a750' radius from the VP's edge, is defined at Appendix A, Endnote 5.
[2] Appendix E, 10(a)-(d) provides links to the state's Significant Wildlife Habitat regulations and references that provide impact minimization measures to reference when designing projects.
[3] The no disturbance requirement in the VP envelope [see (b)(i)(1)], and (b)(i)(2), do not apply to temporary impacts associated with construction mats in previously disturbed areas of existing utility project (e.g., transmission lines, gas pipelines) or linear transportation project (e.g., roads, highways, railways, trails, airport runways and taxiways) right-of-ways provided there is a Vegetation Management Plan that avoids, minimizes and mitigates impacts to aquatic resources.

(b) No stream diversion shall be allowed under Category 1 of this GP.
(c) No impoundments of intermittent or perennial streams shall be allowed under Category 1 and an application to the Corps is required for at least Category 2 review.
(d) The project shall be designed and constructed to not cause flood damage on adjacent properties.

31. Inspections. The permittee shall allow the Corps to make periodic inspections at any time deemed necessary in order to ensure that the work is being or has been performed in accordance with the terms and conditions of this GP. The Corps may also require post-construction engineering drawings for completed work or post-dredging survey drawings for any dredging work.
To facilitate these inspections, the permittee shall complete and return to the Corps:

- For Category 1 projects, the Category 1 Notification Form (Appendix B).
- For Category 2 projects, the 1) Work-Start Notification Form and 2) Compliance Certification Form whenever either is provided with a Category 2 authorization letter.

32. Maintenance.
(a) The permittee shall maintain the work authorized herein in good condition and in conformance with the terms and general conditions of this permit.
(b) This does not include maintenance of dredging projects. Each maintenance dredging event exceeding the Category 1 thresholds (see Appendix A, Page 6) requires a new written Corps authorization unless an unexpired, written Corps authorization specifies that the permittee may "dredge and maintain" an area for a particular time period. Category 1 or 2 maintenance dredging includes only those areas and depths previously authorized and dredged.
(c) Some maintenance activities may not be subject to regulation under Section 404 in accordance with 33 CFR 323.4(a)(2) (see Appendix A, Endnote 7).

33. Property Rights. This PGP does not convey any property rights, either in real estate or material, or any exclusive privileges, nor does it authorize any injury to property or invasion of rights or any infringement of Federal, State, or local laws or regulations.

34. Transfer of GP Verifications. When the structures or work authorized by this GP are still in existence at the time the property is transferred, the terms and conditions of this GP, including any special conditions, will continue to be binding on the entity or individual who received the GP verification, as well as the new owner(s) of the property. The permittee may transfer responsibilities and obligations under the GP verification to the new owner by submitting a letter to the Corps (see Appendix D for address) to validate the transfer. A copy of the GP verification must be attached to the letter and the letter must contain the following statement and signature: "When the structures or work authorized by this GP are still in existence at the time the property is transferred, the terms and conditions of this GP, including any special conditions, will continue to be binding on the new owner(s) of the property. To validate the transfer of this GP and the associated liabilities associated with compliance with its terms and conditions, have the transferee sign and date below."

35. Modification, Suspension, and Revocation. This GP or any work authorized under Category 1 or 2 may be either modified, suspended, or revoked, in whole or in part, pursuant to the policies and procedures of 33 CFR 325.7. Any such action shall not be the basis for any claim for damages against the United States.

36. Restoration Directive. The permittee, upon receipt of a notice of revocation of authorization under this GP, shall restore the wetland or waterway to its former condition without expense to the United States and as directed by the Secretary of the Army or his authorized representative. If the permittee fails

to comply with such a directive, the Secretary or his designee may restore the wetland or waterway to its former condition, by contract or otherwise, and recover the cost from the permittee.

37. Special Conditions. The Corps may independently, or at the request of the Federal resource agencies, impose other special conditions on a project authorized pursuant to this GP that are determined necessary to minimize adverse navigational and/or environmental effects or based on any other factor of the public interest. Failure to comply with all conditions of the authorization, including special conditions, constitutes a permit violation and may subject the permittee to criminal, civil, or administrative penalties and/or an ordered restoration.

38. False or Incomplete Information. If the Corps makes a determination regarding the eligibility of a project under this GP and subsequently discovers that it has relied on false, incomplete, or inaccurate information provided by the permittee, the GP authorization shall not be valid and the U.S. government may institute appropriate legal proceedings.

39. Abandonment. If the permittee decides to abandon the activity authorized under this GP, unless such abandonment is merely the transfer of property to a third party, he/she may be required to restore the area to the satisfaction of the Corps.

40. Enforcement Cases. This GP does not apply to any existing or proposed activity in Corps jurisdiction associated with an on-going Corps or EPA enforcement action, until such time as the enforcement action is resolved or the Corps and/or EPA as appropriate determines that the activity may proceed independently without compromising the enforcement action.

41. Duration of Authorization. This GP expires on October 11, 2015. Activities authorized under this GP that have commenced (i.e., are under construction) or are under contract to commence before this GP expires will have until October 11, 2016 to complete the activity under the terms and conditions of the current GP.

42. Previously Authorized Activities.
(a) Projects that have received authorization (Category 1 or 2) from the Corps and that were completed under the previous PGPs, nationwide permits, regional general permits or letters of permission, shall remain authorized.
(b) Activities authorized pursuant to 33 CFR Part 330.3 ("Activities occurring before certain dates") are not affected by this GP.
(c) Any work not commenced nor completed that was authorized in a written letter from the Corps under the PGP in effect between October 11, 2005 and October 11, 2010 remains authorized subject to the terms and general conditions of this GP along with any special conditions in the authorizing written letter.

43. NEPA Compliance. The Maine PGP was authorized in full compliance with Council for Environmental Quality ("CEQ") NEPA regulations. The Corps has determined that individual permit actions taken under the terms and conditions of the PGP are not a major federal action significantly affecting the quality of the human environment.

10/12/10

District Engineer Date

APPENDIX A: DEFINITION OF CATEGORIES

A. INLAND WATERS AND WETLANDS	**Inland Waters and Wetlands:** Waters that are regulated under Section 404 of the Clean Water Act, including rivers, streams, lakes, ponds and wetlands, and excluding Section 10 Navigable Waters of the U.S. The jurisdictional limits are the ordinary high water (OHW) mark in the absence of adjacent wetlands, beyond the OHW mark to the limit of adjacent wetlands when adjacent wetlands are present, and the wetland limit when only wetlands are present. For the purposes of this GP, fill placed in the area between the mean high water (MHW) and the high tide line (HTL), and in the bordering and contiguous wetlands[1] to tidal waters are reviewed in the Navigable Waters section. (See II. Navigable Waters on page 4 below.)	
	Projects not meeting Category 1 require an application for review as a Category 2 or Individual Permit project. All Category 1 and 2 projects must comply with all of this GP's applicable terms (Pages 1 – 4) and general conditions (Pages 5–18).	
ACTIVITY	**CATEGORY 1**	**CATEGORY 2**
(a) NEW FILL/ EXCAVATION DISCHARGES (You must reference (b) – (e) below for other thresholds that may be relevant to your project.)	**1.** <15,000 square feet (SF) (in LURC or DEP territories) of inland waterway and/or wetland fill and associated secondary impacts[2] (e.g., areas drained, flooded, fragmented, mechanically cleared or excavated). Fill area includes all temporary and permanent fill, and regulated discharges associated with excavation. Construction mats are considered as fill. [See General Condition (GC) 18(g).] <u>Provided:</u> • Historic fill + proposed impact area <15,000 SF and subdivision fill complies with GC 5, Single and Complete Projects. • No work in special aquatic sites (SAS)[4] other than wetlands. **2.** Construction mats[4] of any area necessary to conduct activities that were previously authorized, authorized under Category 1, or not subject to regulation (see Endnote 7). Authorized construction mats must be in place for <3 months, removed immediately upon work completion, and the wetlands must be restored (see GC 19). **3.** For work in Vernal Pool (VP) Management Areas (includes VPs)[5]: • See GC 2 and Appendix C for VP delineation requirements. • See GC 28 to determine if work qualifies for Category 1 or 2. • See Appendix E, Page 3 for VP documents providing mitigation guidance.	**1.** ≥15,000 square feet (SF) (in LURC or DEP territories) to <3 acres of inland waterway and/or wetland fill and associated secondary impacts (e.g., areas drained, flooded, fragmented, or excavated). Fill area includes all temporary and permanent fill, and regulated discharges associated with excavation. Mechanical clearing without grubbing or other soil disturbance >3 acres as a secondary impact may still be eligible for Category 2 at the discretion of the Corps. **2.** Specific activities with impacts of any area ≥15,000 SF required to affect the containment, stabilization, or removal of hazardous or toxic waste materials that are performed, ordered, or sponsored by a government agency with established legal or regulatory authority. Wetlands must be restored in place. **3.** Temporary structures, work, and discharges (including construction mats[4]) ≥15,000 SF necessary for construction activities or access fills or dewatering of construction sites, provided that the associated primary activity is authorized by the Corps, authorized under Category 1, or not subject to Corps regulation. GCs 16 -19 are particularly relevant. See GC 2 and Appendix C for wetland delineation requirements.

ACTIVITY	CATEGORY 1	CATEGORY 2
(b) BANK STABILIZATION PROJECTS	**1.** Inland bank stabilization <500 FT long and <1 CY of fill per linear foot below OHW, provided: • ≤1 cubic yard of fill per linear foot placed along the bank waterward of ordinary high water. • Work complies with the GCs (GC 20 in particular), including: o No structures angled steeper than 1H:1V allowed. Only rough-faced stone or fiber roll revetments allowed. o No in-stream work involving fill or excavation in flowing waters (see GC 22(h)). • In-stream work limited to Jul 15 - Oct 1 [see GC 22 (l)]. • No work in vernal pools[5] or SAS[3]. • GC 10 Endangered Species and GC 11 Essential Fish Habitat are particularly relevant.	**1.** Inland bank stabilization ≥500 FT long and/or ≥1 CY of fill per linear foot, or any amount with fill in wetlands.
(c) RIVER/ STREAM/ BROOK WORK & CROSSINGS *and* WETLAND CROSSINGS	**1.** River, stream and brook work and crossings: • Must comply with GC 22 in particular, including: o No slip lining [see GC 22 (g)]. o No in-stream work involving fill or excavation in flowing waters [see GC 22(h)]. o In-stream work limited to Jul 15 - Oct 1 [see GC 22 (l)]. • No work in riffles and pools[3]. • No stream relocations. • No dams or dikes[6]. • Work in areas designated as Atlantic salmon critical habitat or occupied by listed Atlantic salmon, or any other area occupied by a listed species is not eligible for Category 1 (see GC 10). • No work in EFH streams except for the activities stated in GC 11. **2.** Wetland crossings must comply with the particularly relevant GC 23.	**1.** Work not qualifying for Category 1.

ACTIVITY	CATEGORY 1	CATEGORY 2
(d) REPAIR, REPLACEMENT, & MAINTENANCE OF AUTHORIZED FILLS	**1.** Repair or maintenance of existing, currently serviceable, authorized fills with no expansion or change in use: • Conditions of the original authorization apply • Minor deviations in fill design allowed.[7] • The repair, rehabilitation, or replacement of those structures or fills destroyed or damaged by storms, floods, fire or other discrete events is authorized, provided the repair, rehabilitation, or replacement is commenced, or is under contract to commence, within two years of the date of their destruction or damage.	**2.** Replacement of non-serviceable fills, or repair/maintenance of serviceable fill, with expansion <3 acres, or with a change in use.
(e) MISCELL-ANEOUS	**1.** Activities required for the containment and cleanup of oil and hazardous substances that are subject to the National Oil and Hazardous Substances Pollution Contingency Plan (40 CFR 300) provided that the work is done in accordance with the Spill Control and Countermeasure Plan required by 40 CFR 112.3 and any existing state contingency plan and provided that the Regional Response Team (if one exists in the area) concurs with the proposed containment and cleanup action. SAS[3] must typically be restored in place at the same elevation. **2.** Scientific measurement devices whose purpose is to measure and record scientific data, such as staff gages, water recording devices, water quality testing and improvement devices, and similar structures. This excludes any biological sampling devices. Structures may not restrict movement of aquatic organisms. **3.** Survey activities, such as core sampling, seismic exploratory operations, plugging of seismic shot holes and other exploratory-type bore holes, exploratory trenching, soil surveys, sampling, and historic resources surveys (but not recovery). Exploratory trenches must be restored in accordance with GC 19. The construction of temporary pads is authorized provided the discharge doesn't exceed 25 CY. This doesn't authorize permanent structures or the drilling and the discharge of excavated material from test wells for oil and gas exploration (the plugging of such wells is authorized). **4.** Any work not commenced nor completed that was authorized in a written letter from the Corps under the PGP in effect between October 11, 2005 and October 11, 2010. The terms and general conditions of this GP apply along with any special conditions in the written authorization.	**1.** Aquatic habitat restoration, establishment, and enhancement of wetlands and riparian areas and the restoration and enhancement of streams and other open waters with impacts of any area ≥15,000 SF, provided those activities result in net increase in overall aquatic resource functions and services.[8] **2.** Projects where an EIS is required by the Corps are not eligible for Category 2.

II. NAVIGABLE WATERS	**Navigable Waters of the United States**: Waters that are subject to the ebb and flow of the tide and/or the tidal and non-tidal portions of the Federally designated navigable waters (the Penobscot River, Kennebec River, and Lake Umbagog) (Section 10 Rivers and Harbors Act of 1899). The jurisdictional limits are the mean high water (MHW) line in tidal waters and the ordinary high water (OHW) mark in non-tidal portions of the federally designated navigable rivers. For the purposes of this GP, fill placed in the area between the mean high water (MHW) and the high tide line (HTL), and in the bordering and contiguous wetlands[1] to tidal waters are also reviewed in this Navigable Waters section.	
	Projects not meeting Category 1 require an application for review as a Category 2 or Individual Permit project. All Category 1 and 2 projects must comply with all of this GP's applicable terms (Pages 1 - 4) and general conditions (Pages 5 - 18).	
ACTIVITY	**CATEGORY 1**	**CATEGORY 2**
(a) **FILL**	**1.** Discharges of dredged or fill material incidental to the construction of bridges across navigable waters of the U.S., including cofferdams, abutments, foundation seals, piers, and temporary construction and access fills provided the U.S. Coast Guard authorizes such discharges as part of the bridge permit or appropriate approval. Causeways and approach fills are not included in this category and require Category 2 or Individual Permit authorization. **2.** Bank stabilization projects <200 linear feet: • ≤1 cubic yard of fill per linear foot placed along the bank waterward of high tide line. No fill or equipment will occur in SAS[3]. • Work conducted in the intertidal zone must be conducted in-the-dry during low water, or between Nov. 8 – Apr. 9. • No structures angled steeper than 1H:1V and only rough-faced stone or fiber roll revetments allowed. • No driving of piles or sheeting. **3.** For 1 and 2 above: • Project proponents must contact the USFWS for work on coastal beaches to ensure no impacts to piping plovers, roseate terns or their habitat [see GC 10(b)ii].	**1.** <1 acre temporary or permanent fill, excavation and/or secondary impacts (e.g., areas drained, flooded, fragmented or mechanically cleared). Fill area includes all temporary and permanent waterway fills, provided: • Temporary or permanent fill in eelgrass[14] <1000 SF. • Permanent fill in SAS (excluding eelgrass[14]) <4300 SF.
(b) STREAM WORK & CROSSINGS, *and* WETLAND CROSSINGS	**1.** No new fill for crossings allowed.	**1.** New crossings or replacement crossings that do not fit the (c) Repair and Maintenance activity below.

ACTIVITY	CATEGORY 1	CATEGORY 2
(c) REPAIR AND MAINTENANCE WORK	**1.** Repair, replacement in-kind, or maintenance[7] of existing, currently serviceable[7], authorized structures or fills: • Conditions of the original authorization apply. • No substantial expansion or change in use. • Must be rebuilt in same footprint, however minor deviations in structure design allowed[7]. • The repair, rehabilitation, or replacement of those structures or fills destroyed or damaged by storms, floods, fire or other discrete events is authorized, provided the repair, rehabilitation, or replacement is commenced, or is under contract to commence, within two years of the date of their destruction or damage. Minor deviations for work involving piles shall adhere to one of the 4 methods in a - d below: **a.** Piles installed in-the-dry during low water or in-water between Nov. 8th - Apr. 9th, or **b.** Must be drilled and pinned to ledge, or **c.** Vibratory hammers used to install any size and quantity of wood, concrete or steel piles, or **d.** Impact hammers limited to one hammer and <50 piles installed/day with the following: wood piles of any size, concrete piles ≤18-inches diameter, steel piles <12-inches diameter if the hammer is ≤3000 lbs and a wood cushion is used between the hammer and steel pile, and • For b – d above: o In-water noise levels shall not exceed >187dB SEL re 1µPa or 206dB peak re 1µPa at a distance >10m from the pile being installed~~.~~, and o In-water noise levels >155dB peak re 1µPa shall not exceed 12 consecutive hours on any given day and a 12 hour recovery period (i.e., in-water noise below 155dB peak re 1µPa) must be provided between work days. • For a – d above: o Work is not eligible for Category 1 if conducted in tidal portions of the Penobscot river upstream of a line extending from Turner point in Castine to Moose Point (formerly squaw point) on Cape Jellison in Stockton Springs or in tidal portions of the Kennebec or Androscoggin Rivers upstream of a line extending from Doubling point in Arrowsic to Hospital Point in West Bath.	**1.** Replacement of non-serviceable structures and fills or repair/maintenance of serviceable structures or fills, with fill, replacement or expansion <1 acre, or with a change in use.

ACTIVITY	CATEGORY 1	CATEGORY 2
(d) DREDGING AND ASSOCIATED DISPOSAL	**1.** Maintenance dredging[10] for navigational purposes <1,000 CY with upland disposal. Includes return water from upland contained disposal area, provided: • Proper siltation controls are used. • Dredging & disposal operation limited to Nov. 8 – Apr. 9. • No impact to SAS[3]. • No dredging in intertidal areas. • No dredging in areas considered occupied by listed Atlantic salmon [see GC 10(b)(ii)]. • For dredging in waters outside of Atlantic salmon critical habitat, applicants must contact NMFS (Appendix D) to ensure no impacts to listed species such as shortnose sturgeon. • Project proponents must contact the USFWS for work on coastal beaches to ensure no impacts to piping plovers, roseate terns or their habitat [see GC 10(c)].	**1.** Maintenance dredging[10] ≥1,000 CY, new dredging <25,000 CY, or projects not meeting Category 1. Includes return water from upland contained disposal areas. Disposal includes: • Upland. • Beach nourishment (above mean high water) of any area provided dredging's primary purpose is navigation or sand is from an upland source. • Open water & confined aquatic disposal, if Corps finds the material suitable. **2.** Beach nourishment associated with dredging when the primary purpose is not navigation requires at least a Category 2 review. **3.** Maintenance or new dredging[10] and/or disposal in or affecting a SAS[3] requires an Individual Permit. See II(a) above for dredge disposal in wetlands or waters.
(e) MOORINGS	**1.** Private, non-commercial, non-rental, single-boat moorings, provided: • Authorized by the local harbormaster/town. • Not associated with any boating facility.[11] • Boat or mooring not located in a Federal Navigation Project[12] other than a Federal Anchorage[12]. Moorings in Federal Anchorage not associated with a boating facility[11] and are not for rent. • No interference with navigation. • No new moorings located in SAS[3]. Prior to installation of moorings, a site-specific eelgrass survey should be conducted to document that eelgrass is not present. • When existing, authorized moorings in SAS[3] are going to be replaced, they shall be replaced with elastic mooring systems that prevent mooring chains from resting or dragging on the bottom substrate at all tides and helical anchors, or equivalent SAS protection systems where practicable. **2.** Minor relocation of previously authorized moorings and moored floats, provided: • Authorized by the local harbormaster/town. • Not located in SAS[3] • No interference with navigation. • Cannot be relocated into a Federal Navigation Project[12] other than a Federal Anchorage[12]	**1.** Moorings associated with a boating facility[11]. An eelgrass[14] survey may be required. **2.** Moorings that don't meet the terms in Category 1 and don't require an Individual Permit. This includes private moorings with no harbormaster or means of local approval. **3.** Moorings located such that they, and/or vessels docked or moored at them, are within the buffer zone of the horizontal limits[13] of a Federal Channel[12]. (See Appendix F.) The buffer zone is equal to 3 times the authorized depth of that channel. **4.** An IP is required for moorings within the horizontal limits[11], or with moored vessels that extend, into the horizontal limits of a Federal Navigation Project[12], except those in Federal Anchorages[12]. For 1-4 above, siting of new individual moorings in SAS[3], including eelgrass[14], should be avoided to the maximum extent practicable. If SAS[3] cannot be avoided, plans should show elastic mooring systems that prevent mooring chains from resting or dragging on the bottom substrate at all tides and helical anchors, or equivalent SAS protection systems, where practicable.

ACTIVITY	CATEGORY 1	CATEGORY 2
(f) STRUCTURES AND FLOATS	**1.** Reconfiguration of existing, authorized structures or floats. Provided: **a**. Piles shall adhere to one of the 4 methods in (i) –(iv) below: **i.** Piles installed in-the-dry during low water or in-water between Nov. 8th - Apr. 9th, or **ii.** Must be drilled and pinned to ledge, or **iii.** Vibratory hammers used to install any size and quantity of wood, concrete or steel piles, or **iv.** Impact hammers limited to one hammer and <50 piles installed/day with the following: wood piles of any size, concrete piles ≤18-inches diameter, steel piles <12-inches diameter if the hammer is ≤3000 lbs and a wood cushion is used between the hammer and steel pile. **b**. For (ii) – (iv) above: **i.** In-water noise levels shall not exceed >187dB SEL re 1µPa or 206dB peak re 1µPa at a distance >10m from the pile being installed~~.~~, and **ii.** In-water noise levels >155dB peak re 1µPa shall not exceed 12 consecutive hours on any given day and a 12 hour recovery period (i.e., in-water noise below 155dB peak re 1µPa) must be provided between work days. **c.** For (i) –(iv) above: **i.** Work is not eligible for Category 1 if conducted in tidal portions of the Penobscot river upstream of a line extending from Turner point in Castine to Moose Point (formerly squaw point) on Cape Jellison in Stockton Springs or in tidal portions of the Kennebec or Androscoggin Rivers upstream of a line extending from Doubling point in Arrowsic to Hospital Point in West Bath.	**1.** Private structures or floats, including floatways/skidways, built to access waterway (seasonal and permanent) **2.** Expansions to existing boating facilities[11]. For 1 & 2 above, compliance with the following design standards is not required but recommended: • Pile-supported structures <400 SF, with attached floats totaling ≤200 SF. • Bottom anchored floats ≤200 SF. • Structures are ≤4' wide and have at least a 1:1 height:width ratio[11]. • Floats supported a minimum of 18" above the substrate during all tides. • Structures & floats not located within 25' of any eelgrass[8]. • Moored vessels not positioned over SAS[4]. • No structure located within 25' of the riparian property boundary without written approval from the abutter(s). • No structure extends across >25% of the waterway width at mean low water. • Not located within the buffer zone of the horizontal limits[13] of a Corps Federal Navigation Project (FNP) (App. F). The buffer zone is equal to three times the authorized depth of that FNP. **3.** An Individual Permit is required for structures or floats, including floatways/skidways, located such that they and/or vessels docked or moored at them are within the horizontal limits[13] of a Corps Federal Navigation Project[12] (see App. F). **4.** An Individual Permit is required for structures & floats associated with a new or previously unauthorized boating facility[11].

ACTIVITY	CATEGORY 1	CATEGORY 2
(g) MISCELL-ANEOUS	**1.** Temporary buoys, markers, floats, etc. for recreational use during specific events, provided they are removed within 30 days after use is discontinued. **2.** The placement of aids to navigation and regulatory markers which are approved by and installed in accordance with the requirements of the U.S. Coast Guard. (See 33 CFR 66, Chapter I, subchapter C)." **3.** Activities required for the containment and cleanup of oil and hazardous substances that are subject to the National Oil and Hazardous Substances Pollution Contingency Plan (40 CFR 300) provided that the work is done in accordance with the Spill Control and Countermeasure Plan required by 40 CFR 112.3 and any existing state contingency plan and provided that the Regional Response Team (if one exists in the area) concurs with the proposed containment and cleanup action. SAS[3] must typically be restored in place at the same elevation. **4.** Fish and wildlife harvesting, enhancement, and attraction devices and activities such as pound nets, crab traps, crab dredging, eel pots, lobster traps, and clam and oyster digging, and small fish attraction devices such as open water fish concentrators (sea kites, etc.). This does not authorize artificial reefs or impoundments and semi-impoundments of waters of the U.S. for the culture or holding of motile species such as lobster, or the use of covered oyster trays or clam racks. No activity that results in a hazard to navigation. Note: A Category 1 Notification Form is not required for these devices and activities. **5.** Scientific measurement devices whose purpose is to measure and record scientific data, such as staff gages, water recording devices, water quality testing and improvement devices, and similar structures. Structures may not restrict movement of aquatic organisms. No activity results in a hazard to navigation. **6.** Survey activities such as exploratory drilling, surveying and sampling activities, excluding any biological sampling devices. Does not include oil and gas exploration and fill for roads or construction pads. No activity results in a hazard to navigation. Applicants must contact NMFS to ensure no impacts to listed species.	**1.** Structures or work in or affecting tidal or navigable waters, that are not defined under any of the previous headings listed above. Includes, but is not limited to, utility lines, aerial transmission lines, pipelines, outfalls, boat ramps, floatways/skidways, bridges, tunnels and horizontal directional drilling activities seaward of the mean high water line. **2.** Shellfish/finfish (other than Atlantic salmon), or other aquaculture facilities with no more than minimal individual and cumulative impacts to environmental resources or navigation. –Aquaculture guidelines are provided at: www.maine.gov/dmr/aquaculture/index.htm. **3.** Specific activities with impacts of any area required to affect the containment, stabilization, or removal of hazardous or toxic waste materials that are performed, ordered, or sponsored by a government agency with established legal or regulatory authority. Wetlands must typically be restored in place at the same elevation to qualify. **4.** Aquatic habitat restoration, establishment and enhancement provided those activities are proactive and result in net increases in aquatic resource functions and services.[8] **5.** Projects where an EIS is required by the Corps are not eligible for Category 2.

ACTIVITY	CATEGORY 1	CATEGORY 2
(g) MISCELL-ANEOUS (continued)	**7.** Shellfish seeding (brushing the flats[9]) projects. **8.** Marine railway work not eligible for maintenance[7] (i.e. not currently serviceable[7] or in non-compliance) may be replaced "in-kind" with minor deviations[7] provided: • Work is in the intertidal zone • No fill expansion below high tide line. • Work conducted in-the-dry during low water or in-water between Nov. 8 – Apr. 9. **9.** Test plots <100 SF for the planting of wetland species native to the area. No grading, no structures, no plant growing devices and no interference with navigation, which require at least Category 2 review. **10.** Any work not commenced nor completed that was authorized in a written letter from the Corps under the PGP in effect between October 11, 2005 and October 11, 2010. The terms and general conditions of this GP apply along with any special conditions in the written authorization	

AP-A90

Endnotes/Definitions

[1] **Bordering and Contiguous Wetlands:** A bordering wetland is immediately next to its adjacent waterbody and may lie at, or below, the ordinary high water mark (mean high water in navigable waters) of that waterbody and is directly influenced by its hydrologic regime. Contiguous wetlands extend landward from their adjacent waterbody to a point where a natural or manmade discontinuity exists. Contiguous wetlands include bordering wetlands as well as wetlands that are situated immediately above the ordinary highwater mark and above the normal hydrologic influence of their adjacent waterbody. Note, with respect to the federally designated navigable rivers, the wetlands bordering and contiguous to the tidally influenced portions of those rivers are reviewed under "II. Navigable Waters."

[2] **Direct, Secondary, and Cumulative Impacts/Effects:**

Direct Impacts: The immediate loss of aquatic ecosystem within the footprint of the fill.

Secondary Impacts: These are effects on an aquatic ecosystem that are associated with a discharge of dredged or fill materials, but do not result from the actual placement of the dredged or fill material. Information about secondary effects on aquatic ecosystems shall be considered prior to the time final section 404 action is taken by permitting authorities. Some examples of secondary effects on an aquatic ecosystem are a) fluctuating water levels in all impoundment and downstream associated with the operation of a dam, b) septic tank leaching and surface runoff from residential or commercial developments on fill, and c) leachate and runoff from a sanitary landfill located in waters of the U.S. Put another way, secondary effects are those impacts outside the footprint of the fill that arise from and are associated with the discharge of dredged or fill material, including the operation of an activity or facility associated with the discharge. Examples may include habitat fragmentation; interruption of travel corridors for wildlife (for example, for amphibians that migrate to and from seasonal or vernal pools used as breeding habitat); hydrologic regime changes; and impacts from operation and maintenance activities for constructed facilities; such as noise/lighting, storm water runoff, and road kill of wetland dependent wildlife. Using the directions contained in the guidelines, we consider the circumstances of a proposed discharge and the project of which it is a part to evaluate the scope, extent, severity, and permanence of direct, secondary, and cumulative adverse effects upon the aquatic ecosystem.

Cumulative Impacts: The extent of past, present, and foreseeable developments in the area may be an important consideration in evaluating the significance of a particular project's impacts. Although the impacts associated with a particular discharge may be minor, the cumulative effect of numerous similar discharges can result in a large impact. Cumulative impacts should be estimated only to the extent that they are reasonable and practical.

[3] **Special Aquatic Sites:** Includes wetlands and saltmarsh, mudflats, riffles and pools, and vegetated shallows (predominantly comprised of eelgrass in Maine).

[4] **Construction Mats:** Constructions, swamp and timber mats (herein referred to as "construction mats") are generic terms used to describe structures that distribute equipment weight to prevent wetland damage while facilitating passage and providing work platforms for workers and equipment. They are comprised of sheets or mats made from a variety of materials in various sizes. A timber mat consists of large timbers bolted or cabled together. Corduroy roads, which are not considered to be construction mats, are cut trees and/or saplings with the crowns and branches removed, and the trunks lined up next to one another. Corduroy roads are typically installed as permanent structures. Like construction mats, they are considered as fill whether they're installed temporarily or permanently.

[5] **Vernal Pools:** A vernal pool, also referred to as a seasonal forest pool, is a temporary to semi-permanent body of water occurring in a shallow depression that typically fills during the spring or fall and may dry during the summer. Vernal pools have no permanent inlet or outlet and no viable populations of predatory fish. A vernal pool may provide the primary breeding habitat for wood frogs (*Rana sylvatica*), spotted salamanders (*Ambystoma maculatum*), blue-spotted salamanders (*Ambystoma laterale*), and fairy shrimp (*Eubranchipus* sp.), as well as valuable habitat for other plants and wildlife, including several rare, threatened, and endangered species. A vernal pool intentionally created for the purposes of compensatory mitigation is included in this definition. For the purposes of this GP, the presence of any of the following species in any life stage in any abundance level/quantity would designate the waterbody as a vernal pool: fairy shrimp, blue spotted salamanders, spotted salamanders or wood frogs. The Corps may determine during a Category 2 review that a waterbody should not be regulated as a VP based on available evidence. For the purposes of this GP*, the VP Management Areas are the: Vernal Pool Depression (includes the vernal pool depression up to the spring or fall high water mark, and includes any vegetation growing within the depression), Vernal Pool Envelope (area within 100 FT of the VP Depression's edge) and Critical Terrestrial Habitat (area within 100-750 FT of the Vernal Pool Depression's edge). [*Note: Critical Terrestrial Habitat is defined as 100 -750 FT on page 243 of the document "Science and Conservation of Vernal Pools in Northeastern North America," Calhoun and deMaynadier, 2008, which is referenced in Appendix E, page 3, Paragraph 10(b).

[6] **Water Diversions:** Water diversions are activities such as bypass pumping or water withdrawals. Temporary flume pipes, culverts or cofferdams where normal flows are maintained within the stream boundary's confines aren't water diversions. "Normal flows" are defined as no change in flow from pre-project conditions.

[7] **Maintenance: a)** In accordance with 33 CFR 323.4(a)(2), any discharge of dredged or fill material that may result from any of the following activities is not prohibited by or otherwise subject to regulation under Section 404 of the CWA: "Maintenance, including emergency reconstruction of recently damaged parts, of currently serviceable structures such as dikes, dams, levees, groins, riprap, breakwaters, causeways, bridge abutments or approaches, and transportation structures. Maintenance does not include any modification that changes the character, scope, or size of the original fill design." Otherwise, the following work is regulated and subject to the Category 1 or 2 thresholds in Appendix A above: The repair, rehabilitation, or replacement of any previously authorized, currently serviceable structure or fill, or of any currently serviceable structure or fill authorized by 33 CFR 330.3 – "Activities occurring before certain dates," provided that the structure or fill is not to be put to uses differing from those uses specified or contemplated for it in the original permit or the most recently authorized modification. **b)** Minor deviations in the structure's configuration or filled area, including those due to changes in materials, construction techniques, or current construction codes or safety standards that are necessary to make repair, rehabilitation, or replacement are authorized. **c)** Currently serviceable means useable as is or with some maintenance, but not so degraded as to essentially require reconstruction. **d)** No seaward expansion for bulkheads or any other fill activity is considered Category 1 maintenance. **e)** Only structures or fills that were previously authorized and are in compliance with the terms and condition of the original authorization can be maintained as a non-regulated activity under 33 CFR 323.4(a)(2), or in accordance with the Category 1 or 2 thresholds in Appendix A. **f)** The state's maintenance provisions may differ from the Corps and may require reporting and written authorization from the state. **g)** Contact the Corps to determine whether stream crossing replacements require a written application to the Corps for at least a Category 2 review.

[8] **Aquatic Habitat Restoration, Establishment and Enhancement:** The Corps will decide if a project qualifies and must determine in consultation with federal and state agencies that the net effects are beneficial. The Corps may refer to Nationwide Permit 27 published in the 3/12/07 Federal Register. Activities authorized here may include, but are not limited to: the removal of accumulated sediments; the installation, removal, and maintenance of small water control structures, dikes, and berms; the installation of current deflectors; the enhancement, restoration, or establishment of riffle and pool stream structure; the placement

of in-stream habitat structures; modifications of the stream bed and/or banks to restore or establish stream meanders; the backfilling of artificial channels and drainage ditches; the removal of existing drainage structures; the construction of small nesting islands in inland waters**;** the construction of open water areas; the construction of native shellfish species habitat over unvegetated bottom for the purpose of habitat protection or restoration in tidal waters; shellfish seeding; activities needed to reestablish vegetation, including plowing or discing for seed bed preparation and the planting of appropriate wetland species; mechanized land clearing to remove non-native invasive, exotic, or nuisance vegetation; and other related activities. Only native plant species should be planted at the site.

[9] **Brushing the Flats:** The placement of tree boughs, wooden lath structure, or small-mesh fencing on mudflats to enhance recruitment of soft-shell clams (*Mya arenaria*).

[10] **Maintenance Dredging:** This includes only those areas and depths previously authorized by the Corps and dredged.

[11] **Boating Facilities:** Facilities that provide for a fee, rent, or sell mooring space, such as marinas, yacht clubs, boat clubs, boat yards, town facilities, dockominiums, etc.

[12] **Federal Navigation Projects (FNPs):** FNPs are comprised of Federal Channels and Federal Anchorages. See Appendix F for their location and contact the Corps for more information. "Horizontal Limits" is the outer edge of an FNP. "Buffer Zone" is equal to three times the authorized depth of that channel.

[13] **Horizontal Limits:** The outer edge of a Federal Navigation Project (FNP). See Appendix F and contact the Corps for information on FNP's.

[14] **Eelgrass (Zostera marina):** A type of rooted aquatic vegetation that exists in intertidal and shallow subtidal areas known as vegetated shallows. See www.nero.noaa.gov/hcd/ for eelgrass survey guidance.

[15] **Structures:** The height of structures shall at all points be equal to or exceed the width of the deck. For the purpose of this definition, height shall be measured from the marsh substrate to the bottom of the longitudinal support beam.

US Army Corps of Engineers®
New England District

Appendix B: Category 1 Notification Form

(for all Inland and Navigable Water Projects
in Maine subject to Corps jurisdiction)

Two (2) weeks **before** work commences, submit this to the following mailing address or complete the form at www.nae.usace.army.mil/reg, "State General Permits," "Maine." Call (207) 623-8367 with any questions.

Maine Project Office
U.S. Army Corps of Engineers
New England District
675 Western Avenue #3
Manchester, Maine 04351

State Permit Number: _____
Date of State Permit: _____
State Project Manager: _____

Permittee: _____
Address, City, State & Zip: _____
Phone(s) and Email: _____

Contractor: _____
Address, City, State & Zip: _____
Phone(s) and Email: _____

Consultant/Engineer/Designer: _____
Address, City, State & Zip: _____
Phone(s) and Email: _____

Wetland/Vernal Pool Consultant: _____
Address, City, State & Zip: _____
Phone(s) and Email: _____

Project Location/Description: _____
Address, City, State & Zip: _____
Latitude/Longitude Coordinates: _____
Waterway Name: _____
Work Description: _____
_____
Provide any prior Corps permit numbers: _____
Proposed Work Dates: Start: _____ Finish: _____

Area of wetland impact: _____ SF (leave blank if work involves structures & no fill in Navigable Waters)
Area of waterway impact: _____ SF (leave blank if work involves structures & no fill in Navigable Waters)
Area of compensatory mitigation provided: _____ SF

Work will be done under the following Appendix A categories (circle all that apply):

I. Inland Waters and wetlands: a b c d e
II. Navigable Waters: a b c d e f g

Your name/signature below, as permittee, indicates that you accept and agree to comply with the terms, eligibility criteria, and general conditions of Category 1 of the Maine General Permit.

Permittee Printed Name: _____

Permittee Signature: _____ Date: _____

US Army Corps of Engineers®
New England District

Appendix C: Information Typically Required for Department of the Army Permits

(Category 2 & Individual Projects)

The following information may not be necessary for all projects. For a more comprehensive checklist, go to www.nae.usace.army.mil/reg "Forms" and then "Application and Plan Guideline Checklist." Please check with our Maine office for project-specific requirements at (207) 623-8367.

All Projects:

- ☐ Corps application form (ENG Form 4345) as appropriate.
- ☐ Photographs of wetland/waterway to be impacted.
- ☐ Purpose of the project.
- ☐ Legible, reproducible black and white (no color) plans no larger than 11"x17" with bar scale. Provide locus map and plan views of the entire property.
- ☐ Typical cross-section views of all wetland and waterway fill areas and wetland replication areas.
- ☐ In navigable waters, show mean low water (MLW) and mean high water (MHW) elevations. Show the high tide line (HTL) elevations when fill is involved. In other waters, show ordinary high water (OHW) elevation.
- ☐ On each plan, show the following for the project:
  - ☐ Vertical datum and the NAVD 1988 equivalent with the vertical units as U.S. feet. Don't use local datum. In coastal waters this may be mean higher high water (MHHW), mean high water (MHW), mean low water (MLW), mean low lower water (MLLW) or other tidal datum with the vertical units as U.S. feet. MLLW and MHHW are preferred. Provide the correction factor detailing how the vertical datum (e.g., MLLW) was derived using the latest National Tidal Datum Epoch for that area, typically 1983-2001.
  - ☐ Horizontal state plane coordinates in U.S. survey feet based on the [insert state grid system] for the [insert state] [insert zone] NAD 83.
- ☐ Show project limits with existing and proposed conditions.
- ☐ Limits of any Federal Navigation Project in the vicinity of the project area and horizontal State Plane Coordinates in U.S. survey feet for the limits of the proposed work closest to the Federal Navigation Project;
- ☐ Volume, type, and source of fill material to be discharged into waters and wetlands, including the area(s) (in square feet or acres) of fill in wetlands, below the ordinary high water in inland waters and below the high tide line in coastal waters.
- ☐ Delineation of all waterways and wetlands on the project site, including vernal pools:
  - ☐ Use federal delineation methods and include Corps wetland delineation data sheets. See GC 2; Endnotes 1, 3 and 14 in Appendix A; and www.nero.noaa.gov/hcd for eelgrass survey guidance.
  - ☐ Appendix A, (e) Moorings, contains eelgrass survey requirements for the placement of moorings.
  - ☐ Labels on the plans should indicate whether the federal wetland is also a ME DEP "Wetlands of Special Significance," i.e, coastal wetland, great pond, or one of the eight "Freshwater Wetlands of Special Significance" such as "Critically imperiled or imperiled community," "Significant wildlife habitat," etc. [see Appendix E, 10(a)].
- ☐ For activities involving discharges of dredged or fill material into waters of the U.S., include a statement describing how impacts to waters of the U.S. are to be avoided and minimized, and either a statement describing how impacts to waters of the U.S. are to be compensated for (or a conceptual or detailed mitigation plan) or a statement explaining why compensatory mitigation should not be required for the proposed impacts. Please contact the Corps for guidance.

- ☐ Provide information on secondary and cumulative effects associated with the project (see GC 3).
- ☐ Indicate that application materials were submitted to the Maine Historic Preservation Commission (MHPC) and the appropriate tribes (see Section 3(d) on Page 4).
- ☐ The name(s) of federal endangered and threatened "listed species or habitat" present in the action area (see GC 10 and Appendix E).
- ☐ Identify and describe potential impacts to Essential Fish Habitat (see GC 11).
- ☐ Invasive Species Control Plan (see GC 29).

Information typically required for dredging projects:

- ☐ Sediment testing, including physical (e.g., grain-size analysis), chemical and biological testing. For projects proposing open water disposal, applicants are encouraged to contact the Corps as early as possible regarding sampling and testing protocols. Sampling and testing of sediments without such contact should not occur and if done, would be at the applicant's risk.
- ☐ The area in square feet and volume of material to be dredged below mean high water.
- ☐ Existing and proposed water depths.
- ☐ Type of dredging equipment to be used.
- ☐ Nature of material (e.g., silty sand).
- ☐ Any existing sediment grain size and bulk sediment chemistry data for the proposed or any nearby projects.
- ☐ Information on the location and nature of municipal or industrial discharges and occurrence of any contaminant spills in or near the project area.
- ☐ Shellfish survey.
- ☐ Location of the disposal site (include locus sheet).
- ☐ Identify and describe potential impacts to Essential Fish Habitat (see GC 11).
- ☐ Delineation of submerged aquatic vegetation (e.g., eelgrass beds).

Appendix D: Contacts and Tribal Areas of Interest

1. FEDERAL

U.S. Army Corps of Engineers
Maine Project Office
675 Western Avenue #3
Manchester, Maine 04351
(207) 623-8367; (207) 623-8206 (fax)

Federal Endangered Species
U.S. Fish and Wildlife Service
Maine Field Office
17 Godfrey Drive, Suite 2
Orono, Maine 04473
(207) 866-3344; (207) 866-3351 (fax)

Wild and Scenic Rivers
National Park Service
North Atlantic Region
15 State Street
Boston, Massachusetts 02109
(617) 223-5203

Bridge Permits
Commander (obr)
First Coast Guard District
One South Street - Battery Bldg
New York, New York 10004
(212) 668-7021; (212) 668-7967 (fax)

Federal Endangered Species
National Marine Fisheries Service
Maine Field Office
17 Godfrey Drive Suite 1
Orono, ME 04473
(207) 866-7379; (978) 866-7342 (fax)

Federal Endangered Species & EFH
National Marine Fisheries Service
55 Great Republic Drive
Gloucester, Massachusetts 01930
(978) 281-9102; (978) 281-9301 (fax)

2. STATE OF MAINE

Maine Department of Environmental Protection (for State Permits & Water Quality Certifications)
Division of Land Resource Regulation
Bureau of Land and Water Quality
17 State House Station
Augusta, Maine 04333
(207) 287-7688

Southern Maine Regional Office
312 Canco Road
Portland, Maine 04103
(201) 822-6300

Eastern Maine Regional Office
106 Hogan Road
Bangor, Maine 04401
(207) 941-4570

Northern Maine Regional Office
1235 Central Drive - Skyway Park
Presque Isle, Maine 04769
(207) 764-0477

Maine Land Use Regulation Commission (LURC) (www.maine.gov/doc/lurc/offices.html)
22 State House Station
Augusta, Maine 04333-0022
(207) 287-2631; (207) 287-7439 (fax)

Lakeview Drive
P.O. Box 1107
Greenville, Maine 04441
(207) 695-2466; (207) 695-2380 (fax)

106 Hogan Rd, Suite 7
Bangor, Maine 04401
(207) 941-4052; (207) 941-4222 (fax)

45 Radar Road
Ashland, ME 04732-3600
(207) 435-7963; (207) 435-7184 (fax)

191 Main Street
East Millinocket, ME 04430
(207) 746-2244; (207) 746-2243 (fax)

(For CZM Determinations)
State Planning Office
Coastal Program
184 State Street
State House Station 38
Augusta, Maine 04333
(207) 287-1009

(For Aquaculture Leases)
Maine Department of Marine Resources
P.O. Box 8
West Boothbay Harbor, Maine 04575
(207) 633-9500

(For Submerged Lands Leases)
Maine Department of Conservation
Bureau of Parks and Lands
22 State House Station
Augusta, Maine 04333
(207) 287-3061

3. HISTORIC PROPERTIES

Maine Historic Preservation Commission (MHPC)
State House Station 65
Augusta, Maine 04333-0065
(207) 287-2132; (207) 287-2335 (fax)

Houlton Band of Maliseet Indians
Attn: Sharri Venno, Environmental Planner
88 Bell Road
Littleton, Maine 04730
(207) 532-4273, x215; (207) 532-1883 (fax)
envplanner@maliseets.com

Passamaquoddy Tribe of Indians
Pleasant Point Reservation
Attn: Donald Soctomah, THPO
P.O. Box 343
Perry, Maine 04667
(207) 853-2600; (207) 853-6039 (fax)

Aroostook Band of Micmacs
Attn: Victoria Higgins, Chief
7 Northern Road
Presque Isle, Maine 04769
(207) 764-1972; (207) 764-7667 (fax)

Passamaquoddy Tribe of Indians
Indian Township Reservation
Attn: Donald Soctomah, THPO
P.O. Box 301
Princeton, Maine 04668
(207) 796-2301; (207) 796-5256 (fax)

Penobscot Indian Nation
Indian Island Reservation
Attn: Ms. Bonnie Newsom, THPO
12 Wabanaki Way
Indian Island, Maine 04468
(207) 817-7471; (207) 817-7450 (fax)

4. ORGANIZATIONAL WEBSITES:

Army Corps of Engineers, N.E. District	www.nae.usace.army.mil/reg
Army Corps of Engineers, Headquarters	www.usace.army.mil/CECW/Pages/cecwo_reg.aspx
Environmental Protection Agency	www.epa.gov/owow/wetlands
National Marine Fisheries Service	www.nmfs.noaa.gov
U.S. Fish and Wildlife Service	www.fws.gov/mainefieldoffice
National Park Service	www.nps.gov/rivers/index.html
State of Maine	www.maine.gov
Maine Department of Environmental Protection	www.maine.gov/dep
Maine Land Use Regulation Commission	www.maine.gov/doc/lurc
State of Maine -Aquaculture Guidelines	www.maine.gov/dmr/aquaculture/index.htm

Appendix E: Additional References

1. GC 2: Federal Jurisdictional Boundaries.
(a) Corps Wetlands Delineation Manual, regional supplements, and Corps Wetland Delineation Data Sheets: www.nae.usace.army.mil/reg and then "Wetlands and Jurisdictional Limits."
(b) The USFWS publishes the 1988 National List of Plant Species that Occur in Wetlands (www.nwi.fws.gov).
The Natural Resources Conservation Service (NRCS) publishes the current hydric soil definition, criteria and lists: http://soils.usda.gov/use/hydric. For the Field Indicators for Identifying Hydric Soils in N.E., see www.neiwpcc.org/hydricsoils.asp.

2. GC 5:
Single and complete project means the total project proposed or accomplished by one owner/developer or partnership or other association of owners/developers. For example, if construction of a residential development affects several different areas of a headwater or isolated water, or several different headwaters or isolated waters, the cumulative total of all filled areas should be the basis for deciding whether or not the project will be covered by Category 1 or 2.
The ***Independent utility*** test is used to determine what constitutes a single and complete project in the Corps regulatory program. A project is considered to have independent utility if it would be constructed absent the construction of other projects in the project area. Portions of a multi-phase project that depend upon other phases of the project do not have independent utility. Phases of a project that would be constructed even if the other phases were not built can be considered as separate single and complete projects with independent utility.

3. GC 10: Threatened and Endangered Species.
(a) The following NMFS site must be referenced to ensure that listed species or critical habitat are not present in the action area [GC 10(b)] or to provide information on federally-listed species or habitat [GC 10(e)]: www.nero.noaa.gov/prot_res/esp/ListE&Tspec.pdf. Contact the USFWS for information to check for the presence of listed species (see Appendix D for contact information).
(b) The Endangered Species Act Consultation Handbook – Procedures for Conducting Section 7 Consultations and Conferences, defines action area as "all areas to be affected directly or indirectly by the federal action and not merely the immediate area involved in the action. [50 CFR 402.02]."

4. GC 11: Essential Fish Habitat.
As part of the PGP screening process, the Corps may coordinate with NMFS in accordance with the 1996 amendments to the Magnuson-Stevens Fishery Conservation and Management Act to protect and conserve the habitat of marine, estuarine and anadromous finfish, mollusks, and crustaceans. This habitat is termed "Essential Fish Habitat (EFH)", and is broadly defined to include "those waters and substrate necessary to fish for spawning, breeding, feeding, or growth to maturity." There are EFH waters throughout inland and coastal waters in Maine. For additional information, see the EFH regulations 50 CFR 600 at www.nero.noaa.gov/hcd including the "Guide for EFH Descriptions" at www.nero.noaa.gov/hcd/list.htm. Additional information on the location of EFH can be obtained from NMFS (see Appendix D for contact information).

5. GC 16: Avoidance, Minimization and Compensatory Mitigation.
(a) See www.nae.usace.army.mil/reg and then "Mitigation" to view the April 10, 2008 "Final Compensatory Mitigation Rule" (33 CFR 332) and related documents. The Q&A document states: "In order to reduce risk and uncertainty and help ensure that the required compensation is provided, the rule establishes a preference hierarchy for mitigation options. The most preferred option is mitigation

bank credits, which are usually in place before the activity is permitted. In-lieu fee program credits are second in the preference hierarchy, because they may involve larger, more ecologically valuable compensatory mitigation projects as compared to permittee-responsible mitigation. Permittee-responsible mitigation is the third option, with three possible circumstances: (1) conducted under a watershed approach, (2) on-site and in kind, and (3) off-site/out-of-kind.
(b) Compensatory mitigation may take the form of wetland preservation, restoration, enhancement, creation, and/or in lieu fee (ILF) for inclusion into the Natural Resources Mitigation Fund for projects in DEP and LURC territories. Avoidance of wetland impacts will reduce the ILF dollar total for applicants. The ILF compensation program was established to provide applicants with a flexible compensation option over and above traditional permittee responsible compensation projects. See the Maine ILF Agreement at www.nae.usace.army.mil/reg, "Mitigation" and then "Maine," or www.maine.gov/dep/blwq/docstand/nrpa/ILF_and_NRCP/index.htm.

6. GCs 19 and 29: Invasive Species.
(a) Information on what are considered "invasive species" is provided in our "Compensatory Mitigation Guidance" document at www.nae.usace.army.mil/reg under "Mitigation." The "Invasive Species" section has a reference to our "Invasive Species Control Plan (ISCP) Guidance" document, located at www.nae.usace.army.mil/reg under "Invasive Species," which provides information on preparing an ISCP.
(b) The June 2009 "Corps of Engineers Invasive Species Policy" is at www.nae.usace.army.mil/reg under "Invasive Species" and provides policy, goals and objectives.

7. GC 20: Bank Stabilization.
This generally eliminates bodies of water where the reflected wave energy may interfere with or impact on harbors, marinas, or other developed shore areas. A revetment is sloped and is typically employed to absorb the direct impact of waves more effectively than a vertical seawall. It typically has a less adverse effect on the beach in front of it, abutting properties and wildlife. See the Corps Coastal Engineering Manual EM 1110-2-1100 at www.nae.usace.army.mil/reg under "Useful Links and Documents" for design and construction guidance.

8. GC 22: Stream Crossings and Work.
(a) Projects should be designed and constructed to ensure long-term success using the most recent manual located at www.nae.usace.army.mil/reg under "Stream and River Continuity," currently "Stream Simulation: An Ecological Approach to Providing Passage for Aquatic Organisms at Road-Stream Crossings, by the U.S. Forest Service." Section 5.3.3 is of particular importance. Sections 7.5.2.3 Construction Methods and 8.2.11 Stream-Simulation Bed Material Placement both show important steps in the project construction.
(b) For more information on High-Quality Stream Segments and their components see:
- **i.** High-Quality Stream Segments are shown at www.maine.gov/dep/gis/datamaps.
- **ii.** Class A Waters or Class AA Waters:

www.mainelegislature.org/legis/statutes/38/title38sec465.html, and
www.mainelegislature.org/legis/statutes/38/title38sec467.html.
- **iii.** Outstanding river segments www.mainelegislature.org/legis/statutes/38/title38sec480-P.html.

(c) The Massachusetts Dam Removal and the Wetland Regulations guidance may be used to evaluate the positive and negative impacts of culvert replacement, including the loss of upstream wetlands, which may be offset by the overall benefits of the river restoration. See www.nae.usace.army.mil/reg and then "Stream and River Continuity."
(d) The ME DOT's document "Waterway and Wildlife Crossing Policy and Design Guide for Aquatic Organism, Wildlife Habitat, and Hydrologic Connectivity," 3rd Edition, July 2008, may be used to

evaluate impacts to aquatic, wildlife and surface water resources when designing, constructing, repairing and maintaining stream crossings. Note: Adherence to this DOT document does not ensure compliance with this GP. Projects must comply with the requirements of this GP including GC 22 and the Corps General Stream Crossing Standards contained therein.
www.maine.gov/mdot/environmental-office-homepage/fishpassage/3rd%20edition%20-%20merged%20final%20version%207-01-08a1.pdf.
(e) GC 22(f): The Skidder Bridge Fact Sheet at www.nae.usace.army.mil/reg under "Stream and River Continuity" may be a useful temporary span construction method.

9. GC 23: Wetland Crossings. The Maine DEP's crossing standards are at 06-096 DEP, Chapter 305: Permit by Rule, 9) Crossings (utility lines, pipes and cables).
www.maine.gov/dep/blwq/rules/NRPA/2009/305/305_effective_2009.pdf

10. GC 28: Protection of Vernal Pools.
(a) The state's Significant Wildlife Habitat rules (Chapter 335, Section 9(C) "Habitat management standards for significant vernal pool habitat") are located at
www.maine.gov/dep/blwq/docstand/nrpapage.htm#rule under "Rules."
(b) The following documents provide conservation recommendations:
i. Best Development Practices: Conserving pool-breeding amphibians in residential and commercial development in the northeastern U.S., Calhoun and Klemens, 2002. Chapter III, Management Goals and Recommendations, Pages 15 – 26, is particularly relevant. (Available for purchase at www.maineaudubon.org/resource/index.shtml and on Corps website*.)
ii. Science and Conservation of Vernal Pools in Northeastern North America, Calhoun and deMaynadier, 2008. Chapter 12, Conservation Recommendations section, Page 241, is particularly relevant. (Available for purchase via the internet. Chapter 12 is available on Corps website*.)
* www.nae.usace.army.mil/reg under "Vernal Pools."
(c) Cape Cod Curbing: For smaller roads and driveways, the most important design feature to consider is curbing. Granite curbs and some traditional curbing can act as a barrier to amphibian and hatchling turtle movements. Large numbers of salamanders have been intercepted in their migrations by curbs and catch basins. Use of Cape Cod curbs rather than traditional curbing may be one solution. Alternatively, where storm water management systems require more traditional curbing, it may be possible to design in escape ramps on either side of each catch basin. Cape Cod curbing is shown on Page 35 of the document cited in 10.b.i above. Bituminous material is not required; other materials such as granite are acceptable.
(d) The VP Directional Buffer Guidance document is located at www.nae.usace.army.mil/reg under: 1) "State General Permits" and then "Maine," and 2) "Vernal Pools."

11. GC 32: Maintenance. River restoration projects that are designed to accommodate the natural dynamic tendencies of the fluvial system are maintained in accordance with the project's design objectives (Category 1) or the Corps authorization letter (Category 2). These projects are generally designed to support and implement channel assessment and management practices that recognize a stream's natural dynamic tendencies.

Appendix F: Corps Projects in Maine

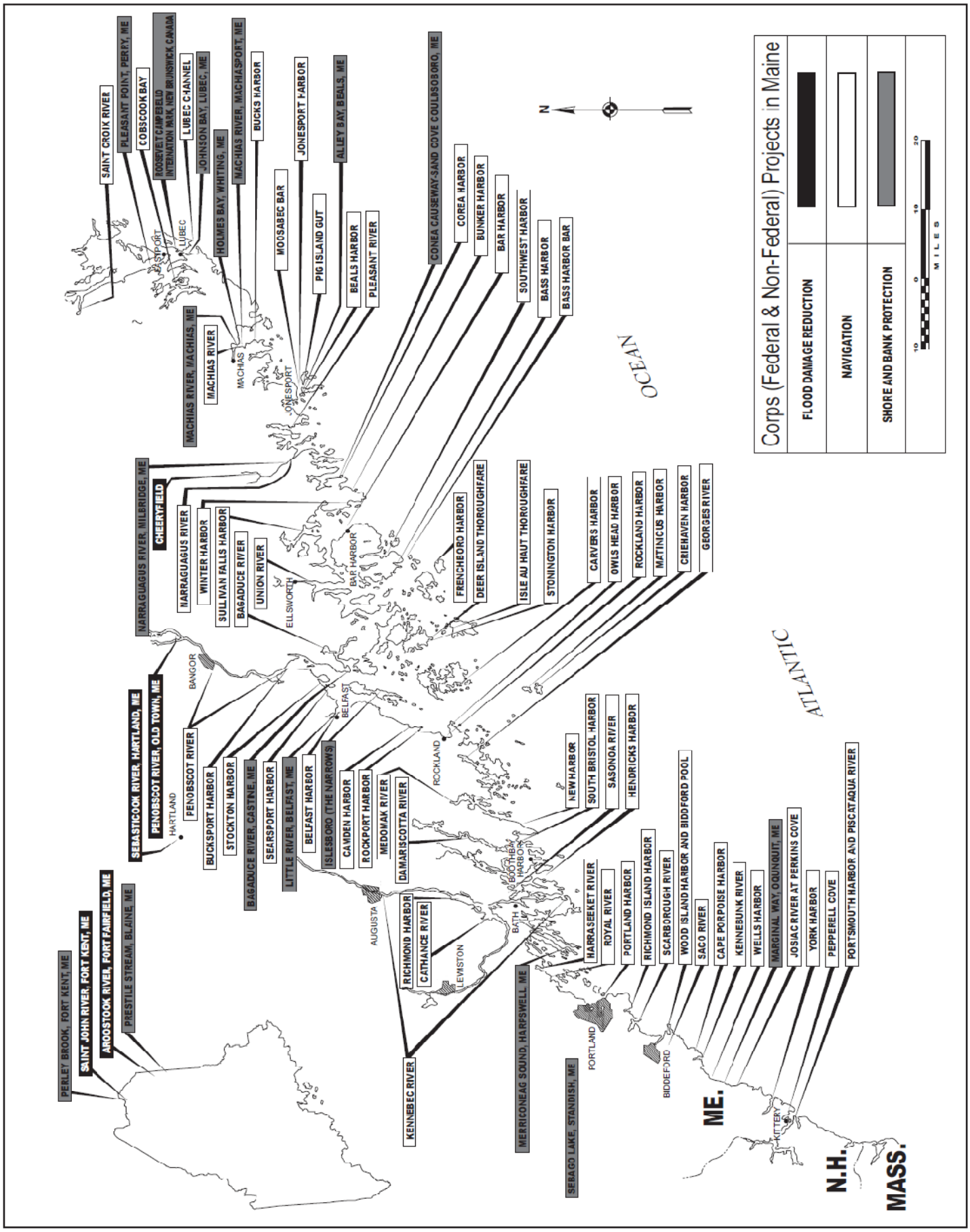

APPENDIX B

LEAD PAINT ASSESSMENT

Abatement Professionals

590 County Road, Suite 2, Westbrook ME 04092 Tel (207) 773-1276 * Fax (207) 772-1203

January 31, 2015

John Doughty
HNTB Corp
340 County Road, Suite 6C,
Westbrook, Maine 04092

Re: Lead/Asbestos Demolition Renovation Impact Assessment, of several Maine Turnpike Toll facilities

Dear Mr. Doughty:

Abatement Professionals Corporation (APC) is providing you with the Lead/asbestos bulk testing results for the samples collected from readily accessible building materials that may be impacted By demolition/renovations activities as outlined in below. APC is a fully licensed certified firm with the Maine DEP as a consultant for asbestos and lead as outlined in their chapter 424 and 425 standards. The inspection of these sites took place on January 14, 2015 and began at West Gardiner Toll Plaza and ended up later that day at the Biddeford toll plaza exit. Robert Rickett Jr was the chief inspector and I was assisted by Nathan Perry a certified asbestos and lead paint supervisor. During this inspection we collected a total of Seven (7) bulk samples of suspect asbestos materials and Fourteen (14) samples of suspect lead based paints. The scope of sample collection was based on the information you gave me in your email. Items that were not sampled because of the sub-freezing temperatures were the roofing materials, in order to collect samples of the roofs we would have needed to core drill the roofs for samples and we wouldn't have been able to seal them to prevent water leakage. Excess to some of the toll booth pits was very limited due to steel plates being bolted or welded in place. The ones I was able to get into were clean for suspect asbestos materials.

HNTB Billing Job#: 57576-DS-437

- **Exit 32 – Biddeford Toll Plaza**
  - Lead testing of canopy posts, canopy framing, and canopy underside.
    - *Samples L-13 and L-14 of the painted surfaces on the Canopy and support posts came back as Less Than the detection limit of 0.01 % which means the material is negative for lead paints,*
  - Asbestos testing of canopy, booths and booth pits.
    - *The canopy, booths and booth pits had no suspect materials located on/in them.*
- **Exit 36 – Saco Toll Plaza**
  - Lead testing of canopy posts and canopy framing.
    - *Samples L-11 and L-12 of the painted surfaces on the Canopy and support posts came back as Less Than the detection limit of 0.01 % which means the material is negative for lead paints,*
  - Asbestos testing of canopy, booths and booth pits.
    - *The canopy, booths and booth pits had no suspect materials located on/in them.*

- **Exit 46 – Northbound Entrance Toll Plaza**
  - Lead testing of canopy posts only.
    - *Samples L-10 painted support posts came back as 0.011% the detection limit of 0.01 % which means the material is marginal for lead paints,*
    -
- **Exit 53 – West Falmouth Toll Plaza**
  - Lead testing of canopy posts, canopy framing, and canopy underside.
    - *Samples L-3, of the Canopy framing back as lead containing at 2.1 % which would be a regulated work activity*
    - *L-4, of the support columns came back as lead containing at 2.7 % which would be a regulated work activity.*
    - *L-5 of the interior side building came back as 0.11 which is marginal for lead paints. Giving the fact you are taking down this building then the Paint on this structure would be an OSHA compliant Demo by heavy equipment project.*
    - *L-6 of the painted exterior of the brick side building came back as Less Than the detection limit of 0.01 % which means the material is negative for lead paints,*

  - Asbestos testing of canopy, booths, booth pits and throughout toll side building.
    - *B-7 of the asbestos samples indicate that asbestos containing caulking was found on the exterior of the side brick building, this material is regulated for proper removal and disposal by the Maine DEP and OSHA.*

HNTB Billing Job#: 57576-DS-456

- **Falmouth Spur Toll Plaza**
  - Lead testing of canopy posts and canopy framing (only on older section of plaza).
    - *L-7 of the support columns came back as less than detection limits which indicates the paint is negative for lead.*
    - *L-8 of the canopy ceiling came back as 0.18 which is under the Maine DEP levels for lead, but does fall under the OSHA compliant work practices.*
    - *L-9 was collected from one of the toll booth doors and came back as 0.023 which again is only an OSHA compliant lead work practice.*
  - Asbestos testing of canopy, booths and booth pits (only on older section of plaza).
    - *The canopy, booths and booth pits had no suspect materials located on/in them.*

HNTB Billing Job#: 57576-DS-455

- **West Gardiner Toll Plaza (on I-95, south of Exit 102)**
  - Lead testing of canopy posts and canopy framing only.
    - *Samples L-1 and L-2 of the painted surfaces on the Canopy and support posts came back as Less Than the detection limit of 0.01 % which means the material is negative for lead paints,*

Abatement Professionals

590 County Road, Suite 2, Westbrook ME 04092 Tel (207) 773-1276 * Fax (207) 772-1203

Plaster ceilings and green floor tiles were tested for asbestos, and all came back as negative for asbestos content.

Attached are the lab results along with the chain of custody for both asbestos and lead sampling.

We appreciate the opportunity to service your asbestos/lead testing needs, should you require Further bulk or air quality sampling please feel free to contact us at any time.

Very truly,

Robert W. Rickett Jr CIE,CMR
President

EMSL Analytical, Inc.
161 John Roberts Road South Portland, ME 04106
Phone/Fax: (207) 517-6921 / (207) 517-6922
http://www.EMSL.com / portlandlab@emsl.com

EMSL Order ID:	621500049
Customer ID:	ABAT52
Customer PO:	140
Project ID:	

Attn:	Bob Rickett Abatement Professionals Corporation 590 County Road Suite #2 Westbrook, ME 04092	Phone: Fax: Collected: Received: Analyzed:	(207) 773-1276 (207) 772-1203 1/14/2015 1/15/2015
Proj:	MAINE TURNPIKE		

Summary Test Report for Asbestos Analysis of Bulk Material via EPA 600/R-93/116 Method via Polarized Light Microscopy

Client Sample ID: B-1 ***Lab Sample ID:*** **621500049-0001**
Sample Description: EXIT 53 BUILDING/PLASTER CEILING

TEST	Analyzed Date	Color	Non-Asbestos Fibrous	Non-Asbestos Non-Fibrous	Asbestos	Comment
PLM	1/14/2015	Brown/Gray	0%	100%	None Detected	

Client Sample ID: B-2 ***Lab Sample ID:*** **621500049-0002**
Sample Description: EXIT 53 BUILDING/PLASTER CEILING

TEST	Analyzed Date	Color	Non-Asbestos Fibrous	Non-Asbestos Non-Fibrous	Asbestos	Comment
PLM	1/14/2015	Brown/Gray	0%	100%	None Detected	

Client Sample ID: B-3 ***Lab Sample ID:*** **621500049-0003**
Sample Description: EXIT 53 BUILDING/PLASTER CEILING

TEST	Analyzed Date	Color	Non-Asbestos Fibrous	Non-Asbestos Non-Fibrous	Asbestos	Comment
PLM	1/14/2015	Brown/Gray	0%	100%	None Detected	

Client Sample ID: B-4 ***Lab Sample ID:*** **621500049-0004**
Sample Description: EXIT 52 TOLL BOOTH/9X9 GREEN FLOOR TILE

TEST	Analyzed Date	Color	Non-Asbestos Fibrous	Non-Asbestos Non-Fibrous	Asbestos	Comment
PLM Grav. Reduction	1/15/2015	Green	0.0%	100%	None Detected	

Client Sample ID: B-5 ***Lab Sample ID:*** **621500049-0005**
Sample Description: EXIT 52 TOLL BOOTH/9X9 GREEN FLOOR TILE

TEST	Analyzed Date	Color	Non-Asbestos Fibrous	Non-Asbestos Non-Fibrous	Asbestos	Comment
PLM Grav. Reduction	1/15/2015	Green	0.0%	100%	None Detected	

Client Sample ID: B-6 ***Lab Sample ID:*** **621500049-0006**
Sample Description: EXIT 52 TOLL BOOTH/9X9 GREEN FLOOR TILE

TEST	Analyzed Date	Color	Non-Asbestos Fibrous	Non-Asbestos Non-Fibrous	Asbestos	Comment
PLM Grav. Reduction	1/15/2015	Green	0.0%	100%	None Detected	

Client Sample ID: B-7 ***Lab Sample ID:*** **621500049-0007**
Sample Description: EXIT 53 BUILDING/WINDOW CAULKING

TEST	Analyzed Date	Color	Non-Asbestos Fibrous	Non-Asbestos Non-Fibrous	Asbestos	Comment
PLM Grav. Reduction	1/15/2015	Gray/White	0.0%	96.5%	**3.5% Chrysotile**	

EMSL Analytical, Inc.
161 John Roberts Road South Portland, ME 04106
Phone/Fax: (207) 517-6921 / (207) 517-6922
http://www.EMSL.com / portlandlab@emsl.com

EMSL Order ID:	621500049
Customer ID:	ABAT52
Customer PO:	140
Project ID:	

Summary Test Report for Asbestos Analysis of Bulk Material via EPA 600/R-93/116 Method via Polarized Light Microscopy

PLM: ME CERT.# BA-0150 (AM)

PLM EPA NOB: ME CERT.# BA-0150 (AM)

Analyst(s):

Alexander Maxinoski PLM (3)
PLM Grav. Reduction (4)

Reviewed and approved by:

CWalker

Christina Walker, Laboratory Manager
or Other Approved Signatory

EMSL maintains liability limited to cost of analysis. This report relates only to the samples reported above and may not be reproduced, except in full, without written approval by EMSL. This test report must not be used to claim product endorsement by NVLAP or any agency of the U.S. Government. EMSL bears no responsibility for sample collection activities or analytical method limitations. The laboratory is not responsible for the accuracy of results when requested to physically separate and analyze layered samples. PLM alone is not consistently reliable in detecting asbestos in floor coverings and similar NOBs

Samples analyzed by EMSL Analytical, Inc. South Portland, ME NVLAP Lab Code 500094-0

Initial report from: 01/15/201508:52:34

Northeast Laboratory Services

P.O. Box 788
Waterville, Maine 04903-0788

227 China Road
Winslow, Maine 04901

Administrative Offices
Phone: 207-873-7711
Fax: 207-873-7022

Customer Service
Phone: 800-244-8378
Fax: 207-873-7022

ANALYSIS REPORT

Attention: Robert W Rickett Jr
Abatement Prof Corp
590 County Rd Suite 2
Westbrook ME 04092

Lab ID Number: AS00094
Project Number: 150115164413
P.O. Number: AS00094-07
Date Collected: 01/14/2015 12:00 AM
Date Received: 01/15/2015 04:00 PM
Date Reported: 01/26/2015

Sample Matrix: PAINT
Sample Description: L-1 W Garadiner Canopy Framing
Sample Type: Grab

Parameter	Result	Qualifier	Unit	Reporting Limit	Method	Preparation Date/Time	Analysis Date/Time	Analyst
Lead Total *	<0.01		%	0.01	EPA 6010B	01/21/2015 12:00	01/22/2015 13:08	ITG

Comments:

Please see the specific analysis comment(s) above.

This report shall not be reproduced, except in full, without written permission from Northeast Laboratory Services.

Authorized By: **Harold Flachsbart, Chemistry Laboratory Director** **Review Date:** 01/26/2015

Analytical results and reports are generated by NEL at the request of and for the exclusive use of the person or entity (client) named on this report. Results, reports or copies of same will not be released by NEL to any third party without the prior express written consent from the client named in this report. This report applies only to those samples taken at the time, place and location referenced by the client. This report makes no express or implied warranty or guarantee as to the sampling methodology used by the individual performing the sampling. The client is solely responsible for the use and interpretation of these results and NEL makes no express or implied warranties as to such use or interpretation. NEL is not able to make and does not make a determination as to the environmental soundness, safety or health of a property from only the samples sent to their laboratory for analysis. Unless otherwise specified by the Client, NEL reserves the right to dispose of all samples after the testing of such samples is sufficiently completed or after a thirty-day period, whichever period is greater. NEL liability extends only to the cost of the testing.

Winslow lab is accredited by the State of Maine Department of Health and Human Services, Maine Center for Disease Control and Prevention (ME00009).

Northeast Laboratory Services

P.O. Box 788
Waterville, Maine 04903-0788

227 China Road
Winslow, Maine 04901

Administrative Offices
Phone: 207-873-7711
Fax: 207-873-7022

Customer Service
Phone: 800-244-8378
Fax: 207-873-7022

ANALYSIS REPORT

Attention: Robert W Rickett Jr
Abatement Prof Corp
590 County Rd Suite 2
Westbrook ME 04092

Lab ID Number: AS00095
Project Number: 150115164413
P.O. Number: AS00094-07
Date Collected: 01/14/2015 12:00 AM
Date Received: 01/15/2015 04:00 PM
Date Reported: 01/26/2015

Sample Matrix: PAINT
Sample Description: L-2 W Gardiner Support Post
Sample Type: Grab

Parameter	Result	Qualifier	Unit	Reporting Limit	Method	Preparation Date/Time	Analysis Date/Time	Analyst
Lead Total	<0.01		%	0.01	EPA 6010B	01/21/2015 12:00	01/22/2015 13:12	ITG

Comments:

This report shall not be reproduced, except in full, without written permission from Northeast Laboratory Services.

Authorized By: **Harold Flachsbart, Chemistry Laboratory Director** **Review Date:** 01/26/2015

Analytical results and reports are generated by NEL at the request of and for the exclusive use of the person or entity (client) named on this report. Results, reports or copies of same will not be released by NEL to any third party without the prior express written consent from the client named in this report. This report applies only to those samples taken at the time, place and location referenced by the client. This report makes no express or implied warranty or guarantee as to the sampling methodology used by the individual performing the sampling. The client is solely responsible for the use and interpretation of these results and NEL makes no express or implied warranties as to such use or interpretation. NEL is not able to make and does not make a determination as to the environmental soundness, safety or health of a property from only the samples sent to their laboratory for analysis. Unless otherwise specified by the Client, NEL reserves the right to dispose of all samples after the testing of such samples is sufficiently completed or after a thirty-day period, whichever period is greater. NEL liability extends only to the cost of the testing.

Winslow lab is accredited by the State of Maine Department of Health and Human Services, Maine Center for Disease Control and Prevention (ME00009).

Northeast Laboratory Services

P.O. Box 788
Waterville, Maine 04903-0788

227 China Road
Winslow, Maine 04901

Administrative Offices
Phone: 207-873-7711
Fax: 207-873-7022

Customer Service
Phone: 800-244-8378
Fax: 207-873-7022

ANALYSIS REPORT

Attention: Robert W Rickett Jr
Abatement Prof Corp
590 County Rd Suite 2
Westbrook ME 04092

Lab ID Number: AS00096
Project Number: 150115164413
P.O. Number: AS00094-07
Date Collected: 01/14/2015 12:00 AM
Date Received: 01/15/2015 04:00 PM
Date Reported: 01/26/2015

Sample Matrix: PAINT
Sample Description: L-3 Exit 53 Canopy Framing
Sample Type: Grab

Parameter	Result	Qualifier	Unit	Reporting Limit	Method	Preparation Date/Time	Analysis Date/Time	Analyst
Lead Total	2.1		%	0.01	EPA 6010B	01/21/2015 12:00	01/22/2015 14:38	ITG

** A 1/1000 dilution was performed in order to bring the concentration of lead into the calibration range.*

Comments:

Please see the specific analysis comment(s) above.

This report shall not be reproduced, except in full, without written permission from Northeast Laboratory Services.

Authorized By: **Harold Flachsbart, Chemistry Laboratory Director** **Review Date:** 01/26/2015

Analytical results and reports are generated by NEL at the request of and for the exclusive use of the person or entity (client) named on this report. Results, reports or copies of same will not be released by NEL to any third party without the prior express written consent from the client named in this report. This report applies only to those samples taken at the time, place and location referenced by the client. This report makes no express or implied warranty or guarantee as to the sampling methodology used by the individual performing the sampling. The client is solely responsible for the use and interpretation of these results and NEL makes no express or implied warranties as to such use or interpretation. NEL is not able to make and does not make a determination as to the environmental soundness, safety or health of a property from only the samples sent to their laboratory for analysis. Unless otherwise specified by the Client, NEL reserves the right to dispose of all samples after the testing of such samples is sufficiently completed or after a thirty-day period, whichever period is greater. NEL liability extends only to the cost of the testing.

Winslow lab is accredited by the State of Maine Department of Health and Human Services, Maine Center for Disease Control and Prevention (ME00009).

Northeast Laboratory Services

P.O. Box 788
Waterville, Maine 04903-0788

227 China Road
Winslow, Maine 04901

Administrative Offices
Phone: 207-873-7711
Fax: 207-873-7022

Customer Service
Phone: 800-244-8378
Fax: 207-873-7022

ANALYSIS REPORT

Attention: Robert W Rickett Jr
Abatement Prof Corp
590 County Rd Suite 2
Westbrook ME 04092

Lab ID Number: AS00097
Project Number: 150115164413
P.O. Number: AS00094-07
Date Collected: 01/14/2015 12:00 AM
Date Received: 01/15/2015 04:00 PM
Date Reported: 01/26/2015

Sample Matrix: PAINT
Sample Description: L-4 Exit 53 Columns
Sample Type: Grab

Parameter	Result	Qualifier	Unit	Reporting Limit	Method	Preparation Date/Time	Analysis Date/Time	Analyst
Lead Total	2.7		%	0.01	EPA 6010B	01/21/2015 12:00	01/22/2015 14:41	ITG

* *A 1/1000 dilution was performed in order to bring the concentration of lead into the calibration range.*

Comments:

Please see the specific analysis comment(s) above.

This report shall not be reproduced, except in full, without written permission from Northeast Laboratory Services.

Authorized By: **Harold Flachsbart, Chemistry Laboratory Director** **Review Date:** 01/26/2015

Analytical results and reports are generated by NEL at the request of and for the exclusive use of the person or entity (client) named on this report. Results, reports or copies of same will not be released by NEL to any third party without the prior express written consent from the client named in this report. This report applies only to those samples taken at the time, place and location referenced by the client. This report makes no express or implied warranty or guarantee as to the sampling methodology used by the individual performing the sampling. The client is solely responsible for the use and interpretation of these results and NEL makes no express or implied warranties as to such use or interpretation. NEL is not able to make and does not make a determination as to the environmental soundness, safety or health of a property from only the samples sent to their laboratory for analysis. Unless otherwise specified by the Client, NEL reserves the right to dispose of all samples after the testing of such samples is sufficiently completed or after a thirty-day period, whichever period is greater. NEL liability extends only to the cost of the testing.

Winslow lab is accredited by the State of Maine Department of Health and Human Services, Maine Center for Disease Control and Prevention (ME00009).

Northeast Laboratory Services

P.O. Box 788
Waterville, Maine 04903-0788

227 China Road
Winslow, Maine 04901

Administrative Offices
Phone: 207-873-7711
Fax: 207-873-7022

Customer Service
Phone: 800-244-8378
Fax: 207-873-7022

ANALYSIS REPORT

Attention: Robert W Rickett Jr
Abatement Prof Corp
590 County Rd Suite 2
Westbrook ME 04092

Lab ID Number: AS00098
Project Number: 150115164413
P.O. Number: AS00094-07
Date Collected: 01/14/2015 12:00 AM
Date Received: 01/15/2015 04:00 PM
Date Reported: 01/26/2015

Sample Matrix: PAINT
Sample Description: L-5 Exit 53 Side Builds Ceiling
Sample Type: Grab

Parameter	Result	Qualifier	Unit	Reporting Limit	Method	Preparation Date/Time	Analysis Date/Time	Analyst
Lead Total	0.11		%	0.01	EPA 6010B	01/21/2015 12:00	01/22/2015 13:28	ITG
*								

Comments:

Please see the specific analysis comment(s) above.

This report shall not be reproduced, except in full, without written permission from Northeast Laboratory Services.

Authorized By: **Harold Flachsbart, Chemistry Laboratory Director** **Review Date:** 01/26/2015

Analytical results and reports are generated by NEL at the request of and for the exclusive use of the person or entity (client) named on this report. Results, reports or copies of same will not be released by NEL to any third party without the prior express written consent from the client named in this report. This report applies only to those samples taken at the time, place and location referenced by the client. This report makes no express or implied warranty or guarantee as to the sampling methodology used by the individual performing the sampling. The client is solely responsible for the use and interpretation of these results and NEL makes no express or implied warranties as to such use or interpretation. NEL is not able to make and does not make a determination as to the environmental soundness, safety or health of a property from only the samples sent to their laboratory for analysis. Unless otherwise specified by the Client, NEL reserves the right to dispose of all samples after the testing of such samples is sufficiently completed or after a thirty-day period, whichever period is greater. NEL liability extends only to the cost of the testing.

Winslow lab is accredited by the State of Maine Department of Health and Human Services, Maine Center for Disease Control and Prevention (ME00009).

Northeast Laboratory Services

P.O. Box 788
Waterville, Maine 04903-0788

227 China Road
Winslow, Maine 04901

Administrative Offices
Phone: 207-873-7711
Fax: 207-873-7022

Customer Service
Phone: 800-244-8378
Fax: 207-873-7022

ANALYSIS REPORT

Attention: Robert W Rickett Jr
Abatement Prof Corp
590 County Rd Suite 2
Westbrook ME 04092

Lab ID Number: AS00099
Project Number: 150115164413
P.O. Number: AS00094-07
Date Collected: 01/14/2015 12:00 AM
Date Received: 01/15/2015 04:00 PM
Date Reported: 01/26/2015

Sample Matrix: PAINT
Sample Description: L-6 Exit 53 Exterior Brick
Sample Type: Grab

Parameter	Result	Qualifier	Unit	Reporting Limit	Method	Preparation Date/Time	Analysis Date/Time	Analyst
Lead Total	<0.01		%	0.01	EPA 6010B	01/21/2015 12:00	01/22/2015 14:44	ITG

Comments:

This report shall not be reproduced, except in full, without written permission from Northeast Laboratory Services.

Authorized By: **Harold Flachsbart, Chemistry Laboratory Director** **Review Date:** 01/26/2015

Analytical results and reports are generated by NEL at the request of and for the exclusive use of the person or entity (client) named on this report. Results, reports or copies of same will not be released by NEL to any third party without the prior express written consent from the client named in this report. This report applies only to those samples taken at the time, place and location referenced by the client. This report makes no express or implied warranty or guarantee as to the sampling methodology used by the individual performing the sampling. The client is solely responsible for the use and interpretation of these results and NEL makes no express or implied warranties as to such use or interpretation. NEL is not able to make and does not make a determination as to the environmental soundness, safety or health of a property from only the samples sent to their laboratory for analysis. Unless otherwise specified by the Client, NEL reserves the right to dispose of all samples after the testing of such samples is sufficiently completed or after a thirty-day period, whichever period is greater. NEL liability extends only to the cost of the testing.

Winslow lab is accredited by the State of Maine Department of Health and Human Services, Maine Center for Disease Control and Prevention (ME00009).

Northeast Laboratory Services

P.O. Box 788
Waterville, Maine 04903-0788

227 China Road
Winslow, Maine 04901

Administrative Offices
Phone: 207-873-7711
Fax: 207-873-7022

Customer Service
Phone: 800-244-8378
Fax: 207-873-7022

ANALYSIS REPORT

Attention: Robert W Rickett Jr
Abatement Prof Corp
590 County Rd Suite 2
Westbrook ME 04092

Lab ID Number: AS00100
Project Number: 150115164413
P.O. Number: AS00094-07
Date Collected: 01/14/2015 12:00 AM
Date Received: 01/15/2015 04:00 PM
Date Reported: 01/26/2015

Sample Matrix: PAINT
Sample Description: L-7 Exit 52 Columns
Sample Type: Grab

Parameter	Result	Qualifier	Unit	Reporting Limit	Method	Preparation Date/Time	Analysis Date/Time	Analyst
Lead Total	<0.01		%	0.01	EPA 6010B	01/21/2015 12:00	01/22/2015 14:48	ITG

Comments:

This report shall not be reproduced, except in full, without written permission from Northeast Laboratory Services.

Authorized By: **Harold Flachsbart, Chemistry Laboratory Director** **Review Date:** 01/26/2015

Analytical results and reports are generated by NEL at the request of and for the exclusive use of the person or entity (client) named on this report. Results, reports or copies of same will not be released by NEL to any third party without the prior express written consent from the client named in this report. This report applies only to those samples taken at the time, place and location referenced by the client. This report makes no express or implied warranty or guarantee as to the sampling methodology used by the individual performing the sampling. The client is solely responsible for the use and interpretation of these results and NEL makes no express or implied warranties as to such use or interpretation. NEL is not able to make and does not make a determination as to the environmental soundness, safety or health of a property from only the samples sent to their laboratory for analysis. Unless otherwise specified by the Client, NEL reserves the right to dispose of all samples after the testing of such samples is sufficiently completed or after a thirty-day period, whichever period is greater. NEL liability extends only to the cost of the testing.

Winslow lab is accredited by the State of Maine Department of Health and Human Services, Maine Center for Disease Control and Prevention (ME00009).

Northeast Laboratory Services

P.O. Box 788
Waterville, Maine 04903-0788

227 China Road
Winslow, Maine 04901

Administrative Offices
Phone: 207-873-7711
Fax: 207-873-7022

Customer Service
Phone: 800-244-8378
Fax: 207-873-7022

ANALYSIS REPORT

Attention: Robert W Rickett Jr
Abatement Prof Corp
590 County Rd Suite 2
Westbrook ME 04092

Lab ID Number: AS00101
Project Number: 150115164413
P.O. Number: AS00094-07
Date Collected: 01/14/2015 12:00 AM
Date Received: 01/15/2015 04:00 PM
Date Reported: 01/26/2015

Sample Matrix: PAINT
Sample Description: L-8 Exit 52 Canopy
Sample Type: Grab

Parameter	Result	Qualifier	Unit	Reporting Limit	Method	Preparation Date/Time	Analysis Date/Time	Analyst
Lead Total *	0.18		%	0.01	EPA 6010B	01/21/2015 12:00	01/22/2015 14:51	ITG

Comments:

Please see the specific analysis comment(s) above.

This report shall not be reproduced, except in full, without written permission from Northeast Laboratory Services.

Authorized By: **Harold Flachsbart, Chemistry Laboratory Director** **Review Date:** 01/26/2015

Analytical results and reports are generated by NEL at the request of and for the exclusive use of the person or entity (client) named on this report. Results, reports or copies of same will not be released by NEL to any third party without the prior express written consent from the client named in this report. This report applies only to those samples taken at the time, place and location referenced by the client. This report makes no express or implied warranty or guarantee as to the sampling methodology used by the individual performing the sampling. The client is solely responsible for the use and interpretation of these results and NEL makes no express or implied warranties as to such use or interpretation. NEL is not able to make and does not make a determination as to the environmental soundness, safety or health of a property from only the samples sent to their laboratory for analysis. Unless otherwise specified by the Client, NEL reserves the right to dispose of all samples after the testing of such samples is sufficiently completed or after a thirty-day period, whichever period is greater. NEL liability extends only to the cost of the testing.

Winslow lab is accredited by the State of Maine Department of Health and Human Services, Maine Center for Disease Control and Prevention (ME00009).

Northeast Laboratory Services

P.O. Box 788
Waterville, Maine 04903-0788

227 China Road
Winslow, Maine 04901

Administrative Offices
Phone: 207-873-7711
Fax: 207-873-7022

Customer Service
Phone: 800-244-8378
Fax: 207-873-7022

ANALYSIS REPORT

Attention: Robert W Rickett Jr
Abatement Prof Corp
590 County Rd Suite 2
Westbrook ME 04092

Lab ID Number: AS00102
Project Number: 150115164413
P.O. Number: AS00094-07
Date Collected: 01/14/2015 12:00 AM
Date Received: 01/15/2015 04:00 PM
Date Reported: 01/26/2015

Sample Matrix: PAINT
Sample Description: L-9 Exit 52 Toll Door
Sample Type: Grab

Parameter	Result	Qualifier	Unit	Reporting Limit	Method	Preparation Date/Time	Analysis Date/Time	Analyst
Lead Total *	0.023		%	0.01	EPA 6010B	01/21/2015 12:00	01/22/2015 13:41	ITG

Comments:

Please see the specific analysis comment(s) above.

This report shall not be reproduced, except in full, without written permission from Northeast Laboratory Services.

Authorized By: **Harold Flachsbart, Chemistry Laboratory Director** **Review Date:** 01/26/2015

Analytical results and reports are generated by NEL at the request of and for the exclusive use of the person or entity (client) named on this report. Results, reports or copies of same will not be released by NEL to any third party without the prior express written consent from the client named in this report. This report applies only to those samples taken at the time, place and location referenced by the client. This report makes no express or implied warranty or guarantee as to the sampling methodology used by the individual performing the sampling. The client is solely responsible for the use and interpretation of these results and NEL makes no express or implied warranties as to such use or interpretation. NEL is not able to make and does not make a determination as to the environmental soundness, safety or health of a property from only the samples sent to their laboratory for analysis. Unless otherwise specified by the Client, NEL reserves the right to dispose of all samples after the testing of such samples is sufficiently completed or after a thirty-day period, whichever period is greater. NEL liability extends only to the cost of the testing.

Winslow lab is accredited by the State of Maine Department of Health and Human Services, Maine Center for Disease Control and Prevention (ME00009).

Northeast Laboratory Services

P.O. Box 788
Waterville, Maine 04903-0788

227 China Road
Winslow, Maine 04901

Administrative Offices
Phone: 207-873-7711
Fax: 207-873-7022

Customer Service
Phone: 800-244-8378
Fax: 207-873-7022

ANALYSIS REPORT

Attention: Robert W Rickett Jr
Abatement Prof Corp
590 County Rd Suite 2
Westbrook ME 04092

Lab ID Number: AS00103
Project Number: 150115164413
P.O. Number: AS00094-07
Date Collected: 01/14/2015 12:00 AM
Date Received: 01/15/2015 04:00 PM
Date Reported: 01/26/2015

Sample Matrix: PAINT 46
Sample Description: L-10 Exit ~~44~~ Support Post Northbound
Sample Type: Grab

Parameter	Result	Qualifier	Unit	Reporting Limit	Method	Preparation Date/Time	Analysis Date/Time	Analyst
Lead Total	0.011		%	0.01	EPA 6010B	01/21/2015 12:00	01/22/2015 14:54	ITG
*								

Comments:

Please see the specific analysis comment(s) above.

This report shall not be reproduced, except in full, without written permission from Northeast Laboratory Services.

Authorized By: **Harold Flachsbart, Chemistry Laboratory Director** **Review Date:** 01/26/2015

Analytical results and reports are generated by NEL at the request of and for the exclusive use of the person or entity (client) named on this report. Results, reports or copies of same will not be released by NEL to any third party without the prior express written consent from the client named in this report. This report applies only to those samples taken at the time, place and location referenced by the client. This report makes no express or implied warranty or guarantee as to the sampling methodology used by the individual performing the sampling. The client is solely responsible for the use and interpretation of these results and NEL makes no express or implied warranties as to such use or interpretation. NEL is not able to make and does not make a determination as to the environmental soundness, safety or health of a property from only the samples sent to their laboratory for analysis. Unless otherwise specified by the Client, NEL reserves the right to dispose of all samples after the testing of such samples is sufficiently completed or after a thirty-day period, whichever period is greater. NEL liability extends only to the cost of the testing.

Winslow lab is accredited by the State of Maine Department of Health and Human Services, Maine Center for Disease Control and Prevention (ME00009).

Northeast Laboratory Services

P.O. Box 788
Waterville, Maine 04903-0788

227 China Road
Winslow, Maine 04901

Administrative Offices
Phone: 207-873-7711
Fax: 207-873-7022

Customer Service
Phone: 800-244-8378
Fax: 207-873-7022

ANALYSIS REPORT

Attention: Robert W Rickett Jr
Abatement Prof Corp
590 County Rd Suite 2
Westbrook ME 04092

Lab ID Number: AS00104
Project Number: 150115164413
P.O. Number: AS00094-07
Date Collected: 01/14/2015 12:00 AM
Date Received: 01/15/2015 04:00 PM
Date Reported: 01/26/2015

Sample Matrix: PAINT
Sample Description: L-11 Exit 36 Canopy
Sample Type: Grab

Parameter	Result	Qualifier	Unit	Reporting Limit	Method	Preparation Date/Time	Analysis Date/Time	Analyst
Lead Total *	<0.01		%	0.01	EPA 6010B	01/21/2015 12:00	01/22/2015 13:48	ITG

Comments:

Please see the specific analysis comment(s) above.

This report shall not be reproduced, except in full, without written permission from Northeast Laboratory Services.

Authorized By: **Harold Flachsbart, Chemistry Laboratory Director** **Review Date:** 01/26/2015

Analytical results and reports are generated by NEL at the request of and for the exclusive use of the person or entity (client) named on this report. Results, reports or copies of same will not be released by NEL to any third party without the prior express written consent from the client named in this report. This report applies only to those samples taken at the time, place and location referenced by the client. This report makes no express or implied warranty or guarantee as to the sampling methodology used by the individual performing the sampling. The client is solely responsible for the use and interpretation of these results and NEL makes no express or implied warranties as to such use or interpretation. NEL is not able to make and does not make a determination as to the environmental soundness, safety or health of a property from only the samples sent to their laboratory for analysis. Unless otherwise specified by the Client, NEL reserves the right to dispose of all samples after the testing of such samples is sufficiently completed or after a thirty-day period, whichever period is greater. NEL liability extends only to the cost of the testing.

Winslow lab is accredited by the State of Maine Department of Health and Human Services, Maine Center for Disease Control and Prevention (ME00009).

Northeast Laboratory Services

P.O. Box 788
Waterville, Maine 04903-0788

227 China Road
Winslow, Maine 04901

Administrative Offices
Phone: 207-873-7711
Fax: 207-873-7022

Customer Service
Phone: 800-244-8378
Fax: 207-873-7022

ANALYSIS REPORT

Attention: Robert W Rickett Jr
Abatement Prof Corp
590 County Rd Suite 2
Westbrook ME 04092

Lab ID Number: AS00105
Project Number: 150115164413
P.O. Number: AS00094-07
Date Collected: 01/14/2015 12:00 AM
Date Received: 01/15/2015 04:00 PM
Date Reported: 01/26/2015

Sample Matrix: PAINT
Sample Description: L-12 Exit 36 Support Post
Sample Type: Grab

Parameter	Result	Qualifier	Unit	Reporting Limit	Method	Preparation Date/Time	Analysis Date/Time	Analyst
Lead Total	<0.01		%	0.01	EPA 6010B	01/21/2015 12:00	01/22/2015 13:52	ITG

Comments:

This report shall not be reproduced, except in full, without written permission from Northeast Laboratory Services.

Authorized By: **Harold Flachsbart, Chemistry Laboratory Director** **Review Date:** 01/26/2015

Analytical results and reports are generated by NEL at the request of and for the exclusive use of the person or entity (client) named on this report. Results, reports or copies of same will not be released by NEL to any third party without the prior express written consent from the client named in this report. This report applies only to those samples taken at the time, place and location referenced by the client. This report makes no express or implied warranty or guarantee as to the sampling methodology used by the individual performing the sampling. The client is solely responsible for the use and interpretation of these results and NEL makes no express or implied warranties as to such use or interpretation. NEL is not able to make and does not make a determination as to the environmental soundness, safety or health of a property from only the samples sent to their laboratory for analysis. Unless otherwise specified by the Client, NEL reserves the right to dispose of all samples after the testing of such samples is sufficiently completed or after a thirty-day period, whichever period is greater. NEL liability extends only to the cost of the testing.

Winslow lab is accredited by the State of Maine Department of Health and Human Services, Maine Center for Disease Control and Prevention (ME00009).

Northeast Laboratory Services

P.O. Box 798
Waterville, Maine 04903-0798

227 China Road
Winslow, Maine 04901

Administrative Offices
Phone: 207-873-7711
Fax: 207-873-7022

Customer Service
Phone: 800-244-8378
Fax: 207-873-7022

ANALYSIS REPORT

Attention: Robert W Rickett Jr
Abatement Prof Corp
590 County Rd Suite 2
Westbrook ME 04092

Lab ID Number: AS00106
Project Number: 150115164413
P.O. Number: AS00094-07
Date Collected: 01/14/2015 12:00 AM
Date Received: 01/15/2015 04:00 PM
Date Reported: 01/26/2015

Sample Matrix: PAINT
Sample Description: L-13 Exit 32 Support Post
Sample Type: Grab

Parameter	Result	Qualifier	Unit	Reporting Limit	Method	Preparation Date/Time	Analysis Date/Time	Analyst
Lead Total	<0.01		%	0.01	EPA 6010B	01/21/2015 12:00	01/22/2015 14:01	ITG

Comments:

This report shall not be reproduced, except in full, without written permission from Northeast Laboratory Services.

Authorized By: **Harold Flachsbart, Chemistry Laboratory Director** **Review Date:** 01/26/2015

Analytical results and reports are generated by NEL at the request of and for the exclusive use of the person or entity (client) named on this report. Results, reports or copies of same will not be released by NEL to any third party without the prior express written consent from the client named in this report. This report applies only to those samples taken at the time, place and location referenced by the client. This report makes no express or implied warranty or guarantee as to the sampling methodology used by the individual performing the sampling. The client is solely responsible for the use and interpretation of these results and NEL makes no express or implied warranties as to such use or interpretation. NEL is not able to make and does not make a determination as to the environmental soundness, safety or health of a property from only the samples sent to their laboratory for analysis. Unless otherwise specified by the Client, NEL reserves the right to dispose of all samples after the testing of such samples is sufficiently completed or after a thirty-day period, whichever period is greater. NEL liability extends only to the cost of the testing.

Winslow lab is accredited by the State of Maine Department of Health and Human Services, Maine Center for Disease Control and Prevention (ME00009).

Northeast Laboratory Services

P.O. Box 788
Waterville, Maine 04903-0788

227 China Road
Winslow, Maine 04901

Administrative Offices
Phone: 207-873-7711
Fax: 207-873-7022

Customer Service
Phone: 800-244-8378
Fax: 207-873-7022

ANALYSIS REPORT

Attention: Robert W Rickett Jr
Abatement Prof Corp
590 County Rd Suite 2
Westbrook ME 04092

Lab ID Number: AS00107
Project Number: 150115164413
P.O. Number: AS00094-07
Date Collected: 01/14/2015 12:00 AM
Date Received: 01/15/2015 04:00 PM
Date Reported: 01/26/2015

Sample Matrix: PAINT
Sample Description: L-14 Exit 32 Canopy
Sample Type: Grab

Parameter	Result	Qualifier	Unit	Reporting Limit	Method	Preparation Date/Time	Analysis Date/Time	Analyst
Lead Total	<0.01		%	0.01	EPA 6010B	01/21/2015 12:00	01/22/2015 14:05	ITG

Comments:

This report shall not be reproduced, except in full, without written permission from Northeast Laboratory Services.

Authorized By: **Harold Flachsbart, Chemistry Laboratory Director** **Review Date:** 01/26/2015

Analytical results and reports are generated by NEL at the request of and for the exclusive use of the person or entity (client) named on this report. Results, reports or copies of same will not be released by NEL to any third party without the prior express written consent from the client named in this report. This report applies only to those samples taken at the time, place and location referenced by the client. This report makes no express or implied warranty or guarantee as to the sampling methodology used by the individual performing the sampling. The client is solely responsible for the use and interpretation of these results and NEL makes no express or implied warranties as to such use or interpretation. NEL is not able to make and does not make a determination as to the environmental soundness, safety or health of a property from only the samples sent to their laboratory for analysis. Unless otherwise specified by the Client, NEL reserves the right to dispose of all samples after the testing of such samples is sufficiently completed or after a thirty-day period, whichever period is greater. NEL liability extends only to the cost of the testing.

Winslow lab is accredited by the State of Maine Department of Health and Human Services, Maine Center for Disease Control and Prevention (ME00009).

Northeast Laboratory Services

P.O. Box 788 • Waterville, ME 04903-0788
207-873-7711 / Fax: 207-873-7022

Shipping: 227 China Road
Winslow, Maine 04901

CHAIN OF CUSTO

AS00094

Bill To: Abatement Professionals
Billing Address: 590 County Rd, West Brook
Report To: Bob@abatementprofessionals.com
Reporting Address: Robert Rickard
Phone: 7731276 Fax 7729203 email

PO #:
Quote #
Project Name Maine Turnpike Toll Booth

Lab Comments:

Sample Designation	Sample Date/Time	Preservation: 1 H_2SO_4, 2=HNO_3, 3=HCL, 4=NaOH, 5=Thio, 6=4°C, 7=None	Container Size, Type	QTY	Sample Type Code: G = Grab C = Composite	Matrix Code Choose One: GW = Ground Water WW = Waste Water DW = Drinking Water SW = Surface Water O = Oil WP = Wipe S = Soil F = Food Other (Please List)	Analyses Requested	Lab Sample ID
L-1 West Gardner Canopy Framing	1-14-15		Baggie		G		AA for Lead	AS00094.1
L-2 West Gardner Support Post	" "						" "	95.1
L-3 Exit 53 Canopy Framing	" "							96.1
L-4 Exit 53 Columns	" "							97.1
L-5 Exit 53 Side Build Ceiling	" "							98.1
L-6 Exit 53 Exterior Brick	" "							99.1
L-7 Exit 52 Columns	" "							100.1
L-8 Exit 52 Canopy	" "							01.1
L-9 Exit 52 Toll Door	" "							02.1
L-10 Exit 52 Support Post Northbound	" "							03.1

Notes: Lead Paint Bulks Results in weights By AA. —

Sampled By: Robert Rickard

Known hazards associated with samples: Lead paint

Relinquished By	Date/Time	Received By	Date/Time	pH
		1/15/15	16:00	
Relinquished By	Date/Time	Received By	Date/Time	Rush Yes — 5 days 50% surcharge; 2 days 100% surcharge
Relinquished By	Date/Time	Received By	Date/Time	Field Filtered Y / N

The recommended temperature of the internal container is 2-6°C. Do you authorize analysis if the temp is out of range?

N/A

Yes No

Chain of Custody must be filled out completely. This includes signature, sample description, analysis requested, date and time sampled.

If not completed, samples will be rejected.

Rev. 8/04 Form #NEL 100

If a sample is hazardous or radioactive, the sample will be returned to the client at the client's expense.
Standard turn-around-time is 10 business days - depending on season.

Northeast Laboratory Services

P.O. Box 788 • Waterville, ME 04903-0788
207-873-7711 / Fax: 207-873-7022

Shipping: 227 China Road
Winslow, Maine 04901

CHAIN OF CUSTODY RECORD

Bill To: Abatement Professionals
Billing Address: 590 County Rd, Westbrook
Report To: Bob@Abatementprofessionals.com
Reporting Address: Robert Ricker
Phone: 7781276 Fax 7728203 email

PO #:
Quote #
Project Name Maine Turnpike Toll plaza

Lab Comments:

Sample Designation	Sample Date/Time	Preservation: 1 H_2SO_4, 2=HNO_3, 3=HCL, 4=NaOH, 5=Thio, 6=4°C, 7=None	Container Size, Type	QTY	Sample Type Code: G = Grab C = Composite	Matrix Code Choose One: GW = Ground Water WW = Waste Water DW = Drinking Water SW = Surface Water O = Oil WP = Wipe S = Soil F = Food Other (Please List)	Analyses Requested	Lab Sample ID
L-11 Exit 36 Canopy	1-14-15		Bag		G		AA for Lead	A8000104.1
L-12 Exit 36 Support Post								05.1
L-13 Exit 32 Support Post								06.1
L-14 Exit 32 Canopy								07.1

Notes: Lead Paint Bulks Results in weight By AA

Sampled By: Robert Ricker

Known hazards associated with samples: lead paint

Relinquished By	Date/Time	Received By	Date/Time	pH	The recommended temperature of the internal container is 2-6°C. Do you authorize analysis if the temp is out of range?
		[signature] 1/15/15	16:00		N/A Yes No
Relinquished By	Date/Time	Received By	Date/Time	Rush Yes 5 days 50% surcharge 2 days 100% surcharge	
Relinquished By	Date/Time	Received By	Date/Time	Field Filtered Y / N	

Chain of Custody must be filled out completely. This includes signature, sample description, analysis requested, date and time sampled.

If not completed, samples will be rejected.

Rev. 8/04 Form #NEL 100

If a sample is hazardous or radioactive, the sample will be returned to the client at the client's expense.
Standard turn-around-time is 10 business days - depending on season.

NORTHEAST LABORATORY SERVICES
SAMPLE RECEIPT CONDITION REPORT

Standard Operating Procedure for Sample Receipt and Log-In of Analytical San

NEL Log-In SOP #.

Client: Atatement Professionals Date/Time Received: 1/15/15 16:00 Intials: [illegible]

Project: _____ Rush? Yes No TAT

NEL Sample Numbers: AS00094.1 — 107.1

Delivered by: Portland Tracking Number: N/A

Cooler ____ of ____

	Yes	No	NA	Comment
1. Are custody seals present?		✓		
2. Is the COC present in cooler?	✓			
3. Is the COC properly filled out?	✓			
4. Is a temp blank present?			✓	{ } Completed at NEL
5. Is the temperature of the cooler 4°C +/- 2°C?			✓	Temp: N/A { } NA Collected <2Hr ago
6. Are ice pacs/ice present in cooler?			✓	
7. Do sample labels match the COC?	✓			
8. Are samples in proper sample containers with proper preservation?*			✓	
9. Are samples within the analytical hold time?	✓			
10. Is there sufficient volume to perform tests?	✓			
11. Are samples in good condition?	✓			
12. Are aqueous VOA/GRO vials free of headspace?			✓	
13. If necessary, has the cooler been screened for radiological activity?			✓	

*See internal COC for preservation verification

Comments: _____

CONTROLLED

S:\SAMPLE ROOM\Sample Receipt Form 050310.doc

APPENDIX C

PLAZA SAFETY REQUIREMENTS

APPENDIX C

PLAZA SAFETY REQUIREMENTS
WEST GARDINER BARRIER TOLL PLAZA
OPEN ROAD TOLLING CONVERSION
(MM 100.2)

The following are the minimum Plaza Lane closure requirements for completing the work. The limits have been set to protect Turnpike patrons and Toll Attendants from potential harm during the prosecution of the work. The Contractor shall utilize this information in bidding the work. Drums and constructions signs will be paid under their respective pay items. Movement of drums and construction signs will be paid under the Maintenance of Traffic pay item.

The Contractor shall furnish, erect, maintain and relocate twenty 10 inch by 14 inch (minimum dimensions) DANGER – Unauthorized Persons Keep Out, or DANGER – DO NOT ENTER signs, meeting OSHA specifications for size, color and legend, for installation on toll booths or drums, as directed by the Resident. The Contractor shall furnish and install red hazard safety tape between barrels and in cordoned off tunnel and lane areas to identify the hazard areas for Turnpike patrons and Toll Attendants. The purchase, erection, maintenance, and relocation of the hazard signs and hazard safety tape shall be incidental to the mobilization pay item. Providing, maintaining and relocating the specified plywood safety walkways at all locations shall also be incidental to the mobilization pay item.

Unless otherwise specified all labor, materials and equipment required to meet the requirements of Appendix C shall be incidental to the various pay items. Maintenance of Traffic signing shall be in place during plaza work at all times.

Phase 1: Lanes 1, 2, 7 and 8 will be available to the Contractor during Phase 1, see Specifications Section 107. Additional lanes may be available as permitted in Section 652.

- Lanes 1, 2, 7 and 8 closed;
- Lanes 1, 2, 7 and 8 ends barreled and safety taped per Maintenance of Traffic plans;
- MTA employee access through the tunnel shall remain;
- Rigid opaque screens shall be installed around concrete demolition areas for noise and dust control prior to the start of work. Work shall be incidental to the mobilization pay item.
- Lanes 3, 4, 5 and 6 and Booths C, D, and E may be occupied.

Phase 2: Lanes 3, 4, 5 and 6 will be available to the Contractor at all times during Phase 2. Additional lanes may become available if in compliance with Section 652.

- Lanes 3, 4, 5and 6 closed;
- Temporary walkway for employee access shall be delineated south of the Lanes 3 thru 6 work area with barrels and tape while Tunnel Access thru Island B is unavailable per Maintenance of Traffic plans;

- Rigid opaque screens shall be installed around concrete demolition areas for noise and dust control prior to the start of work.
- Lanes 1, 2, 7 and 8 and Booths A, B, F and G may be occupied.
- An adequately supported elevated plywood walkway with handrails (island-to-island) shall be installed over work area and available at all times to provide a second emergency egress for Booths B and F when manned. The work area adjacent to both Booths B and F when manned shall remain clear to provide the second emergency egress.

Tunnel Work – The affected tunnel area shall be closed between stairwells whenever workmen are demolishing concrete (above or through the tunnel); installing conduits and wires; booth removal; concrete placement; mechanical adjustments or injecting cracks in the tunnel. Poly dust shields and Hazardous Work Area Signs shall be posted. MTA employees will not be allowed to pass through the closed areas. Stairwells shall remain open whenever possible for tunnel access to adjacent areas. The Contractor shall provide positive mechanical ventilation to remove dust and fumes out of the tunnel and away from the plaza at all times work is ongoing or dust and fumes are present. Debris and materials shall be cleaned-up on a daily basis and prior to the closed area being reopened for general Turnpike employee use.

Tunnel work will occur simultaneously with slab work in order to minimize closures of the tunnel.

APPENDIX D

DEFINED TERMS

DEFINED TERMS

- **AVI (Automatic Vehicle Identification)**: a system consisting of an antenna and reader installed in a toll lane for communication with a transponder located on a vehicle for automatic identification of the transponder as it passes through the lane.
- **Canopy Override Switch (COS)**: shall mean the switch that controls the signal that is located on the canopy on the entry side of each toll lane.
- **Sensor Loops**: a system for automatic vehicle detection, separation and classification.
- **COMM** - Communications
- **Components**: parts that compose a device or piece of equipment.
- **DVAS (Digital Video Audit System)** – A video camera and image storage system that captures traffic movements in the lane 24 hours a day.
- **EMT** - Electrical Metallic Tubing
- **Gradient Sensor** – Part of the Sensor Loop system - a gradient sensor is placed on each side of the Primary sensor.
- **Contractor**: The Contractor hired by the Authority through a solicitation process to complete the Project.
- **JB** - Junction Box
- **Lane Controller (LC)**: A computer system for each type of toll lane that controls the lane equipment.
- **Manual Lane Terminal (or MLT)**: A device consisting of an array of touch screen buttons and associated electronics for processing toll transactions in the attended tollbooths.
- **MTA -** Maine Turnpike Authority
- **NTS** -Not to Scale
- **Paypoint Sensor** – Part of the Sensor Loop system. Detects when the vehicle has reached the lane paypoint, in this case the tollbooth door centerline.
- **Primary Sensor** – Part of the Sensor Loop system. Located between two gradient sensors, a 6' x '6 square sensor that participates in vehicle classification.
- **Project:** shall mean the upgrade of the existing New Gloucester Barrier Toll Lane 8 to the toll collection system described in herein.
- **RMC** - Rigid Metallic Conduit
- **RP (Receipt Printer)** – Receipt printer that communicates with the payment system. Located in the booth.
- **Specifications**: shall mean the Technical Specification and instructions included in this document for the purpose of defining the installation procedures
- **SI (Systems Integrator) -** The systems integrator/contractor for the MTA toll system.
- **SS** - Stainless Steel
- **TCP (Traffic Control Pedestal)**: A pedestal to mount a traffic signal and screen with a message to patrons.

- **UPS** - Uninterrupted Power Supply
- **VES (Violation Enforcement System)** – Cameras that automatically capture digital photographic images of vehicles and their license plates.

APPENDIX E

PLAZA WORK CHECKLIST

PLAZA – WORK CHECKLIST

DATE SUBMITTED:		**DATE APPROVED:**				
REVISION #1:		**DATE APPROVED:**				
REVISION #2:		**DATE APPROVED:**				
PROPOSED EQUIPMENT	**PROPOSED LOCATION**	**POWER SOURCE**		**EXTRA WORK (Y/N)**	**APPRVL DATE**	**APPRVL BY**
		PANEL	**CIRCUIT**			
(2) AVI READERS						
(26) SENSOR LOOPS						
(2) DVAS CAMERA MOUNTS						
(2) ORT LANE CONTROLLER CABINETS						
(12) VCARS CAMERAS						
(10) AVI ANTENNAS						
(2) LIGHTNING SUPPRESSION SYSTEMS						
(2) SPACE FRAME LIGHTING SYSTEMS						
EXISTING TO REMAIN EQUIPMENT	**LOCATION**	**POWER SOURCE**		**EXTRA WORK (Y/N)**	**APPRVL DATE**	**APPRVL BY**
		PANEL	**CIRCUIT**			
(1) UPS IN TUNNEL						
EXISTING EQUIPMENT TO BE REMOVED	**LOCATION**	**POWER SOURCE**		**EXTRA WORK (Y/N)**	**APPRVL DATE**	**APPRVL BY**
		PANEL	**CIRCUIT**			
(4) ENTRY LOOPS						
(4) EXIT LOOPS						
(4) TREADLES						
(4) LIGHT CURTAIN						
(4) PATRON FARE DISPLAY						
(4) ISLAND TRAFFIC LIGHT						
(2) OVERHEAD SCANNER						
(4) CANOPY OVERRIDE SWITCH						
(6) RED/GREEN LIGHTS						
(2) RED LIGHTS						
(4) AVI ANTENNAS						
PORTION OF LIGHTNING SUPPRESSION SYSTEM						
PORTION OF CANOPY LIGHTING						
EXPLANATION OF ALL EXTRA WORK (USE ADDITIONAL SHEET IF REQUIRED)						

APPENDIX F

PRODUCT DATA SHEETS

Costar CHG3000S Series

Weatherproof Environmental Enclosure

The CHG3000S Series environmental enclosures house 1/3-inch or 1/2-inch format CCD cameras. Side openings allow easy access to the removable camera sled. The weatherproof CHG3000S is designed for indoor and outdoor use and has a body length of 12.5 inches. These housings work with fixed focal length or small zoom lenses. Also available is a 24V heater/blower kit.

Product Features

- For 1/3-inch format CCD cameras
- All aluminum construction
- Side opening for easy access
- Designed for indoor/outdoor applications; for use with fixed mount or pan/tilt
- Dustproof, IP66 weatherproof rated

Costar VIDEO SYSTEMS, LLC
2720 Commodore Drive, Suite 150 • Carrollton, TX 75007 www.costarvideo.com
Tel: 972-446-8844 • Fax: 972-446-8866 • 1-888-694-STAR (7827)

CHG3000S Series Specifications

Models

CHG3000S	Enclosure, environmental, 12.5-inch (31.75 cm) lower body length
CHG3000SHB	Enclosure, environmental, 12.5-inch (31.75 cm) lower body length. 24V thermostat controlled heater and blower

General

Maximum Camera and Lens Size	Accepts camera and lens combinations (including BNC connector) up to:
CHG3000S	11.5″L x 3.5″ W x 2.5″ H (29.21 cm x 8.89 cm x 6.35 cm)
CHG3000SHB	11.5″ L x 3.5″ W x 2.5″ H (29.21 cm x 8.89 cm x 6.35 cm)
Window Size	.11-inch (3.0 mm) thick tempered glass 2.42″ H x 2.65″ W (6.15 cm x 6.75 cm)
Construction	Die-cast, extruded, and sheet aluminum
Finish	Light-gray polyester power coat
Camera Mounting	Removable camera sled with adjustable height
Housing Mounting	Two (2) 1/4-20 tapped holes
Cable Entry	Two .35-inch (9.0 mm) glands on rear of housing
Rear Locking	Located at rear of housing; available for security lock
Environment	Indoor/outdoor: -10˚F to 120˚F (-23.33˚C to 48.89˚C)

Weight	Unit	Shipping
CHG3000S	2.70lb (1.23kg)	3.03lb (1.38kg)
CHG3000SHB	3.67lb (1.67kg)	4.18lb (1.90 kg)

Electrical

Input Voltage	24VAC, 50/60Hz lower body length

Power Consumption

Heater	Heater activates ON at 42-58˚F (6-14˚C) and OFF at 72-88˚F (22-31˚C), 20W, 0.83 Amp
Blower	Blower activates ON at 77-93˚F (25-34˚C) and OFF at 62-78˚F (17-26˚C), 2W, 0.08 Amp

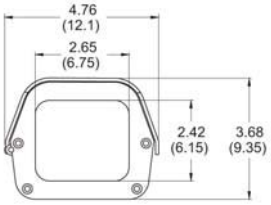

Optional Accessories

CHG3000-02	Heater kit, 24V, 20W, 0.83 Amp
CHG3000-03	Blower kit, 24V, 2W. 0.8 Amp

Note: Heater and Blower assemblies require O/I PCB BOARD assembly for connection.

Recommended Mounts

Wall	
CHG2700	Light duty wall mount. Max. load 20 lb (9.06kg)
Ceiling/Pedestal	
CHG2720	Medium duty celing "J" mount. Max. load 20 lb (9.06kg)

Design and specifications subject to change without notice.
Conversion: 1″ = 25.4mm
Measurement conversions are approximate.

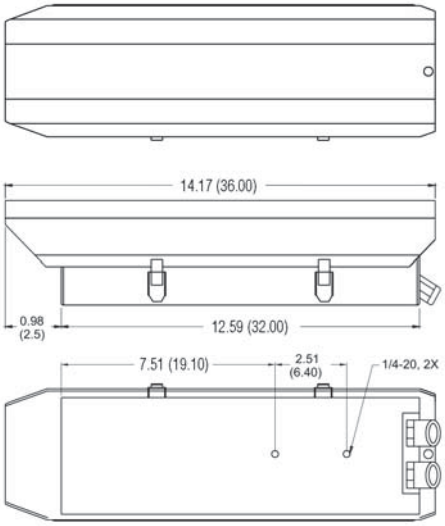

Unit: inch(cm)

Form CHG3000S-8/06

Costar VIDEO SYSTEMS, LLC
2720 Commodore Drive, Suite 150 • Carrollton, TX 75007 www.costarvideo.com
Tel: 972-446-8844 • 46-8866 • 1-888-694-STAR (7827)

EM1109/EM2000/EM2200 Mount

PIPE/POLE MOUNT, MEDIUM DUTY, ENCLOSURE

Product Features

- Low Cost
- Manually Adjustable Swivel Head
- Cable Feedthrough Hole
- Supports up to 40 lb (18.14 kg)
- Mounts on Vertical or Horizontal Pipe/Pole; Mounting Straps Included
- Compatible with Most Pelco Enclosures with a 2-Inch (5.08 cm) Mounting Pole Pattern

EM2200

The **EM1109/EM2000/EM2200** are medium duty enclosure mounts designed for applications where mounting on a pipe or pole is necessary. These mounts can be used with Pelco enclosures having a 2-inch (5.08 cm) mounting hole pattern and are capable of supporting up to 40 lb (18.14 kg). All three mounts feature a manually adjustable swivel head and a cable feedthrough hole to conceal wiring. Multiple mounting holes on the tilt table provide maximum 360-degree horizontal positioning of the enclosure.

The **EM1109** is a pedestal mount for use on a horizontal or vertical pipe or pole. The **EM2000** is a J-type mount for use on a vertical pipe or pole, and the **EM2200** is a "hook" type mount for use on a horizontal pipe or pole. The **EM1109/EM2000/EM2200** must be mounted on pipes or poles having a 3-inch (7.62 cm) to 8-inch (20.32 cm) diameter. Mounts are secured to the pipe or pole with stainless steel mounting straps. Two 1/4-20 mounting bolts required to secure the enclosure to the mount are also supplied.

The **EM1109/EM2000/EM2200** are constructed of aluminum and have a white epoxy powder coat finish.

EM2000

EM1109

TECHNICAL SPECIFICATIONS

MODELS

EM1109	Medium duty pedestal mount for horizontal or vertical pipe or pole applications. Manually adjustable swivel head and cable feedthrough hole.
EM2000	Medium duty 90 degree J-mount for vertical pipe or pole applications. Manually adjustable swivel head and cable feedthrough hole.
EM2200	Medium duty "hook" mount for horizontal pipe or pole applications. Manually adjustable swivel head and cable feedthrough hole.

MECHANICAL

Pan Adjustment	Unlimited 360°
Tilt Adjustment	±75°
Locking Method	3/8-16 hex head bolts (on manually adjustable swivel head)

GENERAL

Suggested Mounting Method	Slots provided for mounting straps; 3 stainless steel straps supplied. Straps fit 3-inch (7.62 cm) to 8-inch (20.32 cm) diameter pole.
Enclosure Mounting	2, 1/4-20 mounting bolts (supplied)
Maximum Load	40 lb (18.14 kg)
Construction	Aluminum
Finish	White epoxy polyester powder coat
Environment	Indoor/outdoor
Unit Weight	
EM1109	1.88 lb (0.85 kg)
EM2000	3.05 lb (1.38 kg)
EM2200	3.51 lb (1.59 kg)
Shipping Weight	
EM1109	3 lb (1.36 kg)
EM2000	8 lb (3.60 kg)
EM2200	9 lb (4.10 kg)

RECOMMENDED ENCLOSURES

Pelco enclosures having a 2-inch (5.08 cm) mounting hole pattern can be used with these mounts. Be sure the enclosure/camera/lens combination you select does not exceed 40 lb (18 kg) and is suitable for the type of mount you have selected. The following list indicates the most applicable enclosures.

EH3010/EH3014 Series
EH4010 EH4014 Series
EH3508 Series, Environmental
EH3512/EH3515 Series, Environmental
EH4700 Series, Environmental
EH4700DB Series, Environmental
E700 Series, Dust-Tight
EHX4E, Explosion-Proof
EH8100 Series, Pressurized

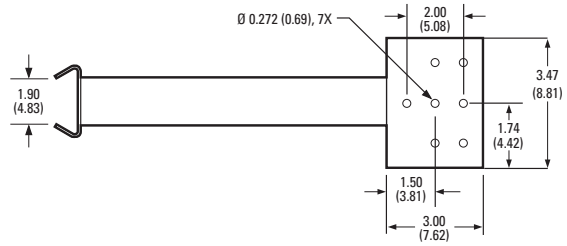

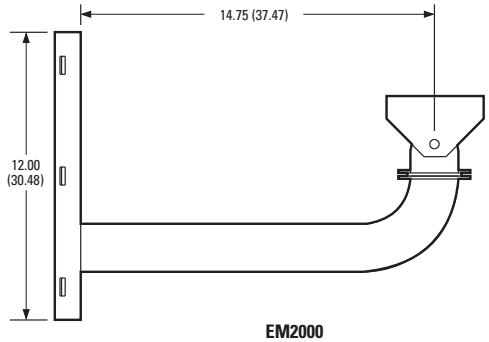

EM2000

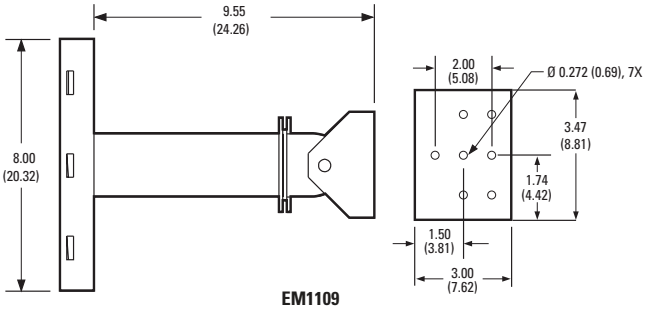

EM1109

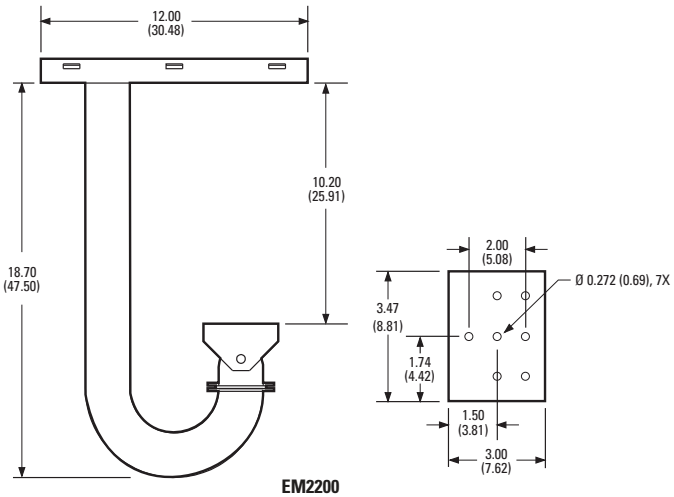

EM2200

NOTE: VALUES IN PARENTHESES ARE CENTIMETERS; ALL OTHERS ARE INCHES.

Pelco, Inc. Worldwide Headquarters:
3500 Pelco Way, Clovis, California 93612-5699 USA
USA & Canada Tel: (800) 289-9100 • FAX: (800) 289-9150
International Tel: +1 (559) 292-1981 • FAX: +1 (559) 348-1120
www.pelco.com

Pelco and the Pelco logo are registered trademarks of Pelco, Inc.
Product specifications and availability subject to change without notice.
©Copyright 2008, Pelco, Inc. All rights reserved.

LOCTITE®

Hysol® E-40FL™

December 200

PRODUCT DESCRIPTION

Hysol® E-40FL™ provides the following product characteristics:

Technology	Epoxy
Chemical Type (Resin)	Epoxy
Chemical Type (Hardener)	Polyamide
Appearance (Resin)	Off-white to beige liquid[LMS]
Appearance (Hardener)	Dark gray liquid[LMS]
Appearance (Mixed)	Gray, opaque liquid[LMS]
Components	Two component - requires mixing
Viscosity	Medium
Mix Ratio, by volume - Resin : Hardener	1 : 1
Mix Ratio, by weight - Resin : Hardener	100 : 85
Cure	Room temperature cure after mixing
Application	Bonding

Hysol® E-40FL™ is a toughened, medium viscosity, industrial grade epoxy adhesive with a medium working life. Once mixed, the two component epoxy cures at room temperature to form a flexible, gray bondline with excellent resistance to shock and impact. When fully cured, the epoxy is resistant to a wide range of chemicals and solvents, and acts as an excellent electrical insulator. Typical applications include bonding plastic, metal, glass, wood, ceramic, rubber, and masonry materials where flexibility is required. Suited for low-stress, high-impact bonding applications of dissimilar materials. Hysol® E-40FL™ can also be used for repairing strain gauges, sealing seams on fiberglass components, repairing printed circuit boards, bonding stainless steel inserts, and rubber hose to steel tubing.

TYPICAL PROPERTIES OF UNCURED MATERIAL

Resin:

Specific Gravity @ 25 °C	1.3
Flash Point - See MSDS	
Viscosity, Brookfield - RVT, 25 °C, mPa·s (cP):	
Spindle 7, speed 10 rpm	60,000 to 90,000[LMS]

Hardener:

Specific Gravity @ 25 °C	1.1
Flash Point - See MSDS	
Viscosity, Brookfield - RVT, 25 °C, mPa·s (cP):	
Spindle 7, speed 10 rpm	50,000 to 85,000[LMS]

Mixed:

Specific Gravity @ 25 °C	1.2
Working life, minutes	40
Tack Free Time minutes	130

TYPICAL CURING PERFORMANCE

Cure Speed vs. Time

The graph below shows shear strength developed with time on abraded, acid etched aluminum lapshears @ 25 °C with ar average bondline gap of 0.1 to 0.2 mm and tested according tc ISO 4587.

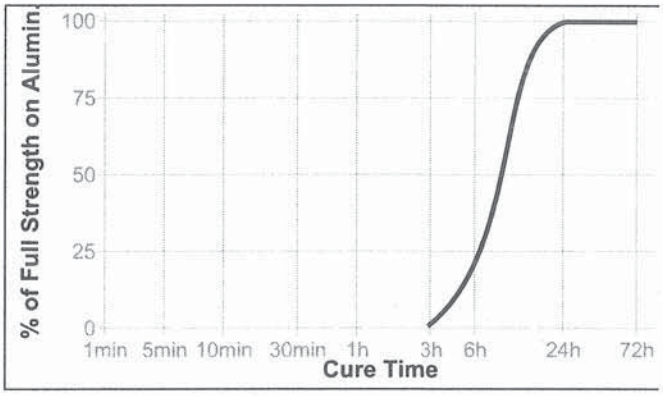

TYPICAL PROPERTIES OF CURED MATERIAL

Cured @ 25 °C

Physical Properties:

Glass Transition Temperature (Tg), °C		30
Shore Hardness, ISO 868, Durometer D		75
Elongation, ISO 527-2, %		22
Tensile Strength, ISO 527-2	N/mm²	16
	(psi)	(3,210)

Electrical Properties:

Dielectric Breakdown Strength, IEC 60243-1, kV/mm	16

TYPICAL PERFORMANCE OF CURED MATERIAL

Adhesive Properties

Cured for 3 days @ 22 °C

Lap Shear Strength, ISO 4587:

Steel (grit blasted)	N/mm²	4.4
	(psi)	(640)
Aluminum (acid etched & abraded), 0.1 to 0.2 mm gap	N/mm²	25.9
	(psi)	(3,750)
Aluminum (anodised)	N/mm²	6.3
	(psi)	(920)
Stainless steel	N/mm²	5.2
	(psi)	(760)
Polycarbonate	N/mm²	2.3
	(psi)	(330)
Nylon	N/mm²	2.6
	(psi)	(380)
Wood (Fir)	N/mm²	6.6
	(psi)	(960)

Block Shear Strength, ISO 13445:

PVC	N/mm²	2.8
	(psi)	(400)
ABS	N/mm²	3.1
	(psi)	(450)
Epoxy	N/mm²	11
	(psi)	(1,600)
Acrylic	N/mm²	3.2
	(psi)	(460)
Glass	N/mm²	12.9
	(psi)	(1,860)

Cured for 2 hours @ 65 °C
Lap Shear Strength, ISO 4587:

Aluminum (acid etched) 0.13 mm gap	N/mm²	≥6.9[LMS]
	(psi)	(≥1,000)

TYPICAL ENVIRONMENTAL RESISTANCE

Cured for 12 hours @ 65 °C followed by 4 hours @ 22 °C
Lap Shear Strength, ISO 4587:
Aluminum (acid etched & abraded), 0.1 to 0.2 mm gap

Hot Strength

Tested at temperature

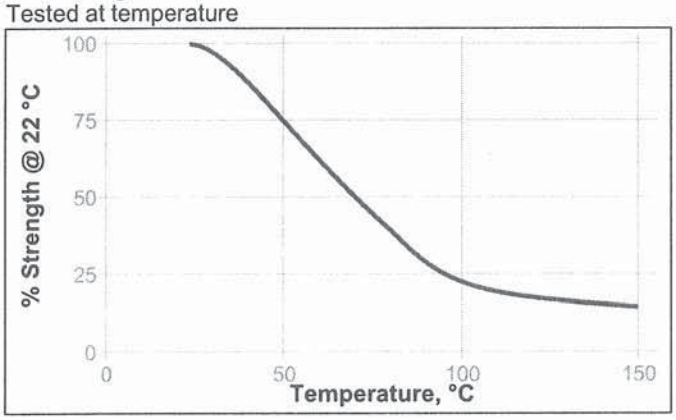

Cured for 5 days @ 22 °C
Lap Shear Strength, ISO 4587:
Steel

Heat Aging

Aged at temperature indicated and tested @ 22 °C

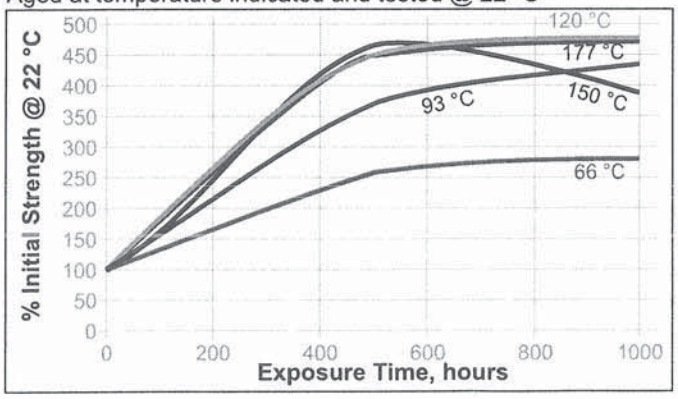

Chemical/Solvent Resistance

Aged under conditions indicated and tested @ 22 °C.

		% of initial strength	
Environment	**°C**	**500 h**	**1000 h**
Air	87	195	248
Motor oil (10W30)	87	269	215
Unleaded gasoline	87	61	73
Water/glycol 50/50	87	235	134
Salt fog	22	25	5
95% RH	38	60	64
Condensing Humidity	49	61	54
Water	22	50	0
Acetone	22	0	0
Isopropanol	22	68	61

GENERAL INFORMATION

This product is not recommended for use in pure oxygen and/or oxygen rich systems and should not be selected as a sealant for chlorine or other strong oxidizing materials.

For safe handling information on this product, consult the Material Safety Data Sheet (MSDS).

Directions for use

1. For high strength structural bonds, remove surface contaminants such as paint, oxide films, oils, dust, mold release agents and all other surface contaminants.
2. Use gloves to minimize skin contact. DO NOT use solvents for cleaning hands.
3. **Dual Cartridges:** To use simply insert the cartridge into the application gun and start the plunger into the cylinders using light pressure on the trigger. Next, remove the cartridge cap and expel a small amount of adhesive to be sure both sides are flowing evenly and freely. If automatic mixing of resin and hardener is desired, attach the mixing nozzle to the end of the cartridge and begin dispensing the adhesive. For hand mixing, expel the desired amount of the adhesive and mix thoroughly. Mix for approximately 15 seconds after uniform color is obtained.
   Bulk Containers: Mix thoroughly by weight or volume in the proportions specified in Product Description section. Mix vigorously, approximately 15 seconds after uniform color is obtained.
4. For maximum bond strength apply adhesive evenly to both surfaces to be joined.
5. Application to the substrates should be made within 40 minutes. Larger quantities and/or higher temperatures will reduce this working time.
6. Join the adhesive coated surfaces and allow to cure at 25 °C for 24 hours for high strength. Heat up to 93 °C, will speed curing.
7. Keep parts from moving during cure. Contact pressure is neccesary. Maximum shear strength is obtained with a 0.1 to 0.2 mm bond line.
8. Excessive uncured adhesive can be cleaned up with ketone type solvents.

Loctite Material Specification[LMS]
LMS dated July 19, 2001 (Resin) and LMS dated July 19, 2001 (Hardener). Test reports for each batch are available for the indicated properties. LMS test reports include selected QC test parameters considered appropriate to specifications for customer use. Additionally, comprehensive controls are in place to assure product quality and consistency. Special customer specification requirements may be coordinated through Henkel Loctite Quality.

Storage
Store product in the unopened container in a dry location. Storage information may be indicated on the product container labeling.
Optimal Storage: 8 °C to 21 °C. Storage below 8 °C or greater than 28 °C can adversely affect product properties. Material removed from containers may be contaminated during use. Do not return product to the original container. Henkel Corporation cannot assume responsibility for product which has been contaminated or stored under conditions other than those previously indicated. If additional information is required, please contact your local Technical Service Center or Customer Service Representative.

Conversions
(°C x 1.8) + 32 = °F
kV/mm x 25.4 = V/mil
mm / 25.4 = inches
µm / 25.4 = mil
N x 0.225 = lb
N/mm x 5.71 = lb/in
N/mm² x 145 = psi
MPa x 145 = psi
N·m x 8.851 = lb·in
N·m x 0.738 = lb·ft
N·mm x 0.142 = oz·in
mPa·s = cP

Note
The data contained herein are furnished for information only and are believed to be reliable. We cannot assume responsibility for the results obtained by others over whose methods we have no control. It is the user's responsibility to determine suitability for the user's purpose of any production methods mentioned herein and to adopt such precautions as may be advisable for the protection of property and of persons against any hazards that may be involved in the handling and use thereof. In light of the foregoing, **Henkel Corporation specifically disclaims all warranties expressed or implied, including warranties of merchantability or fitness for a particular purpose, arising from sale or use of Henkel Corporation's products. Henkel Corporation specifically disclaims any liability for consequential or incidental damages of any kind, including lost profits.** The discussion herein of various processes or compositions is not to be interpreted as representation that they are free from domination of patents owned by others or as a license under any Henkel Corporation patents that may cover such processes or compositions. We recommend that each prospective user test his proposed application before repetitive use, using this data as a guide. This product may be covered by one or more United States or foreign patents or patent applications.

Trademark usage
Except as otherwise noted, all trademarks in this documen are trademarks of Henkel Corporation in the U.S. an elsewhere. ® denotes a trademark registered in the U.S Patent and Trademark Office.

Reference 0.0

Material Safety Data Sheet

Henkel

Revision Number: 002.1

Issue date: 01/26/2010

1. PRODUCT AND COMPANY IDENTIFICATION

Product name: UNITED TOLL EPX RESIN
Product type: Epoxy resin

IDH number: 744608
Item number: 40486
Region: United States

Company address:
Henkel Corporation
One Henkel Way
Rocky Hill, Connecticut 06067

Contact information:
Telephone: 860.571.5100
Emergency telephone: 860.571.5100
Internet: www.henkelna.com

2. HAZARDS IDENTIFICATION

EMERGENCY OVERVIEW

Physical state: Liquid
Color: Light
Odor: Faint, Epoxy

HMIS:
HEALTH: 2
FLAMMABILITY: 1
PHYSICAL HAZARD: 0
Personal Protection: See MSDS Section 8

WARNING: MAY CAUSE ALLERGIC SKIN REACTION.
MAY CAUSE EYE, SKIN AND RESPIRATORY TRACT IRRITATION.

Relevant routes of exposure: Skin, Inhalation, Eyes

Potential Health Effects

Inhalation: May cause respiratory tract irritation.
Skin contact: May cause allergic skin reaction. May cause skin irritation. Burning sensation. Itching. Redness. Swelling.
Eye contact: May cause irritation. Direct contact may cause temporary redness and discomfort.
Ingestion: Not a relevant route of exposure.

Existing conditions aggravated by exposure: Skin allergies. Skin disorders. Respiratory disorders.

This material is considered hazardous by the OSHA Hazard Communication Standard (29 CFR 1910.1200).

See Section 11 for additional toxicological information.

3. COMPOSITION / INFORMATION ON INGREDIENTS

Hazardous components	CAS NUMBER	%
Epichlorohydrin-4,4'-isopropylidene diphenol resin	25068-38-6	60 - 100
Kaolin	1332-58-7	10 - 30

4. FIRST AID MEASURES

Inhalation: Move to fresh air. If not breathing, give artificial respiration. If breathing is difficult, give oxygen. If symptoms develop and persist, get medical attention.

Skin contact: Immediately flush skin with plenty of water (using soap, if available). Remove contaminated clothing and footwear. If symptoms develop and persist, get medical attention. Wash clothing before reuse. Thoroughly clean shoes before reuse.

Eye contact: Immediately flush eyes with plenty of water for at least 15 minutes. Get medical attention.

Ingestion: DO NOT induce vomiting unless directed to do so by medical personnel. Never give anything by mouth to an unconscious person. Get medical attention.

5. FIRE FIGHTING MEASURES

Flash point: > 93 °C (> 199.4 °F) Setaflash Closed Cup

Autoignition temperature: Not available

Flammable/Explosive limits - lower: Not available

Flammable/Explosive limits - upper: Not available

Extinguishing media: Water spray (fog), foam, dry chemical or carbon dioxide.

Special firefighting procedures: Wear self-contained breathing apparatus and full protective clothing, such as turn-out gear.

Unusual fire or explosion hazards: None expected.

Hazardous combustion products: Acids. Aldehydes. Irritating organic vapours. Oxides of carbon.

6. ACCIDENTAL RELEASE MEASURES

Use personal protection recommended in Section 8, isolate the hazard area and deny entry to unnecessary and unprotected personnel.

Environmental precautions: Do not allow product to enter sewer or waterways.

Clean-up methods: Soak up with inert absorbent material (e.g. sand, silica gel, acid binder, universal binder, sawdust). Scrape up spilled material and place in a closed container for disposal.

7. HANDLING AND STORAGE

Handling: Use only with adequate ventilation. Keep container closed. Prevent contact with eyes, skin and clothing. Do not breathe vapor and mist. Wash thoroughly after handling.

Storage: Keep in a cool, well ventilated area away from heat, sparks and open flame. Keep container tightly closed until ready for use.

For information on product shelf life contact Henkel Customer Service at (800) 243-4874.

8. EXPOSURE CONTROLS / PERSONAL PROTECTION

Employers should complete an assessment of all workplaces to determine the need for, and selection of, proper exposure controls and protective equipment for each task performed.

Hazardous components	ACGIH TLV	OSHA PEL	AIHA WEEL	OTHER
Epichlorohydrin-4,4'-isopropylidene diphenol resin	None	None	None	None
Kaolin	2 mg/m3 TWA Respirable fraction.	5 mg/m3 TWA Respirable fraction. 15 mg/m3 TWA Total dust.	None	None

Engineering controls: Use local ventilation if general ventilation is insufficient to maintain vapor concentration below established exposure limits.

Respiratory protection:	Use NIOSH approved respirator if there is potential to exceed exposure limit(s).
Eye/face protection:	Safety goggles or safety glasses with side shields.
Skin protection:	Use impermeable gloves and protective clothing as necessary to prevent skin contact. Butyl rubber gloves.

9. PHYSICAL AND CHEMICAL PROPERTIES

Physical state:	Liquid
Color:	Light
Odor:	Faint, Epoxy
Odor threshold:	Not available
pH:	Not available
Vapor pressure:	Not available
Boiling point/range:	> 250 °C (> 482°F)
Melting point/ range:	Not available
Vapor density:	Not available
Flash point:	> 93 °C (> 199.4 °F) Setaflash Closed Cup
Flammable/Explosive limits - lower:	Not available
Flammable/Explosive limits - upper:	Not available
Autoignition temperature:	Not available
Evaporation rate:	Not available
Solubility in water:	Negligible
Partition coefficient (n-octanol/water):	Not available
VOC content:	< 1 %; < 10 g/l Estimated

10. STABILITY AND REACTIVITY

Stability:	Stable under normal conditions of storage and use.
Hazardous reactions:	Will not occur.
Hazardous decomposition products:	Oxides of carbon. Hydrocarbons. Phenolics.
Incompatible materials:	Strong oxidizing agents. Amines. Acids. Bases.
Conditions to avoid:	Avoid temperatures above 149°C (300°F).

11. TOXICOLOGICAL INFORMATION

Hazardous components	NTP Carcinogen	IARC Carcinogen	OSHA Carcinogen (Specifically Regulated)
Epichlorohydrin-4,4'-isopropylidene diphenol resin	No	No	No
Kaolin	No	No	No

Hazardous components	Health Effects/Target Organs
Epichlorohydrin-4,4'-isopropylidene diphenol resin	Allergen, Irritant
Kaolin	Nuisance dust

12. ECOLOGICAL INFORMATION

Ecological information:	Not available

13. DISPOSAL CONSIDERATIONS

Information provided is for unused product only.

Recommended method of disposal:	Follow all local, state, federal and provincial regulations for disposal.
Hazardous waste number:	Not a RCRA hazardous waste.

14. TRANSPORT INFORMATION

The shipping classifications in this sections are for non-bulk packaging only (unless otherwise specified). Shipping classification may be different for bulk packaging.

U.S. Department of Transportation Ground (49 CFR)

Proper shipping name:	Not regulated
Hazard class or division:	None
Identification number:	None
Packing group:	None

International Air Transportation (ICAO/IATA)

Proper shipping name:	Environmentally hazardous substance, liquid, n.o.s. (Bisphenol-A Epichlorhydrine resin)
Hazard class or division:	9
Identification number:	UN 3082
Packing group:	III

Water Transportation (IMO/IMDG)

Proper shipping name:	ENVIRONMENTALLY HAZARDOUS SUBSTANCE, LIQUID, N.O.S. (Bisphenol-A Epichlorhydrine resin)
Hazard class or division:	9
Identification number:	UN 3082
Packing group:	III
Marine pollutant:	Bisphenol-A Epichlorhydrine resin

15. REGULATORY INFORMATION

United States Regulatory Information

TSCA 8 (b) Inventory Status:	All components are listed or are exempt from listing on the Toxic Substances Control Act Inventory.
TSCA 12(b) Export Notification:	None above reporting de minimus
CERCLA/SARA Section 302 EHS:	None above reporting de minimus
CERCLA/SARA Section 311/312:	Immediate Health
CERCLA/SARA 313:	None above reporting de minimus
California Proposition 65:	This product contains a chemical known in the State of California to cause cancer.

Canada Regulatory Information

CEPA DSL/NDSL Status:	All components are listed on or are exempt from listing on the Canadian Domestic Substances List.
WHMIS hazard class:	D.2.B

16. OTHER INFORMATION

This material safety data sheet contains changes from the previous version in sections: New Material Safety Data Sheet format., This Material Safety Data Sheet contains changes from the previous version in Section(s): 2, 5, 10, 14, 15

Prepared by: Rena Petrides, Regulatory Affairs Specialist

DISCLAIMER: The data contained herein are furnished for information only and are believed to be reliable. However, Henkel Corporation does not assume responsibility for any results obtained by persons over whose methods Henkel Corporation has no control. It is the user's responsibility to determine the suitability of Henkel's products or any production methods mentioned herein for a particular purpose, and to adopt such precautions as may be advisable for the protection of property and persons against any hazards that may be involved in the handling and use of any of Henkel Corporation's products. In light of the foregoing, Henkel Corporation specifically disclaims all warranties, express or implied, including warranties of merchantability and fitness for a particular purpose, arising from sale or use of Henkel Corporation's products. Henkel Corporation further disclaims any liability for consequential or incidental damages of any kind, including lost profits.

Material Safety Data Sheet

Henkel

Revision Number: 002.1

Issue date: 05/07/2009

1. PRODUCT AND COMPANY IDENTIFICATION

Product name: UNITED TOLL EPX HARD 18.9L
Product type: Epoxy Hardener

Company address:

IDH number: 744609
Item number: 40487
Region: United States
Contact information:
Not available
Emergency telephone: 860.571.5100

2. HAZARDS IDENTIFICATION

EMERGENCY OVERVIEW

Physical state: Liquid
Color: Gray
Odor: Mild

HMIS:

HEALTH:	*2
FLAMMABILITY:	1
PHYSICAL HAZARD:	0
Personal Protection:	See MSDS Section 8

WARNING: CAUSES EYE AND SKIN IRRITATION.
MAY CAUSE RESPIRATORY TRACT IRRITATION.

Relevant routes of exposure: Skin, Inhalation, Eyes

Potential Health Effects

Inhalation: May cause respiratory tract irritation.
Skin contact: Causes skin irritation.
Eye contact: Causes eye irritation.
Ingestion: Not a relevant route of exposure.

Existing conditions aggravated by exposure: Eye, skin, and respiratory disorders. Skin allergies.

This material is considered hazardous by the OSHA Hazard Communication Standard (29 CFR 1910.1200).

See Section 11 for additional toxicological information.

3. COMPOSITION / INFORMATION ON INGREDIENTS

Hazardous components	CAS NUMBER	%
Al-silicate Kaolin	1332-58-7	10 - 30
Salicylic acid	69-72-7	1 - 5
Glycerol	56-81-5	1 - 5
2,4,6-Tris(dimethylaminomethyl)phenol	90-72-2	1 - 5
Silica, amorphous, fumed, crystal-free	112945-52-5	1 - 5

4. FIRST AID MEASURES

Inhalation: Move to fresh air. If not breathing, give artificial respiration. If breathing is difficult, give oxygen. Get medical attention.

Skin contact: Immediately flush skin with plenty of water (using soap, if available). Remove contaminated clothing and footwear. Thoroughly clean shoes before reuse. Get medical attention.

Eye contact:	Immediately flush eyes with plenty of water for at least 15 minutes. Get medical attention.
Ingestion:	DO NOT induce vomiting unless directed to do so by medical personnel. Never give anything by mouth to an unconscious person. Get medical attention.

5. FIRE FIGHTING MEASURES

Flash point:	> 93 °C (> 199.4 °F) Setaflash Closed Cup
Autoignition temperature:	Not available
Flammable/Explosive limits - lower:	Not available
Flammable/Explosive limits - upper:	Not available
Extinguishing media:	Foam, dry chemical or carbon dioxide.
Special firefighting procedures:	Wear self-contained breathing apparatus and full protective clothing, such as turn-out gear.
Unusual fire or explosion hazards:	Personnel in vicinity and downwind should be evacuated.
Hazardous combustion products:	Ammonia. Nitric acid. Oxides of carbon. Oxides of nitrogen. Irritating organic fragments.

6. ACCIDENTAL RELEASE MEASURES

Use personal protection recommended in Section 8, isolate the hazard area and deny entry to unnecessary and unprotected personnel.

Environmental precautions:	Do not allow product to enter sewer or waterways.
Clean-up methods:	Immediately contact emergency personnel. Ensure adequate ventilation. Soak up with inert absorbent material (e.g. sand, silica gel, acid binder, universal binder, sawdust). Scrape up spilled material and place in a closed container for disposal.

7. HANDLING AND STORAGE

Handling:	Prevent contact with eyes, skin and clothing. Do not breathe vapor and mist. Wash thoroughly after handling. Keep container closed. Use only with adequate ventilation.
Storage:	Keep in a cool, well ventilated area away from heat, sparks and open flame. Keep container tightly closed until ready for use. Do not store near acids. Do not store in reactive metal containers.

For information on product shelf life contact Henkel Customer Service at (800) 243-4874.

8. EXPOSURE CONTROLS / PERSONAL PROTECTION

Employers should complete an assessment of all workplaces to determine the need for, and selection of, proper exposure controls and protective equipment for each task performed.

Hazardous components	ACGIH TLV	OSHA PEL	AIHA WEEL	OTHER
Al-silicate Kaolin	2 mg/m3 TWA Respirable fraction.	5 mg/m3 TWA Respirable fraction. 15 mg/m3 TWA Total dust.	None	None
Salicylic acid	None	None	None	None
Glycerol	10 mg/m3 TWA Mist.	15 mg/m3 TWA Total dust. 5 mg/m3 TWA Respirable fraction.	None	None
2,4,6-Tris(dimethylaminomethyl)phenol	None	None	None	None
Silica, amorphous, fumed, crystal-free	10 mg/m3 TWA Inhalable dust. 3 mg/m3 TWA Respirable fraction.	20 MPPCF TWA 0.8 mg/m3 TWA	None	None

Engineering controls: Local exhaust ventilation is recommended when general ventilation is not sufficient to control airborne contamination.

Respiratory protection: Use NIOSH approved respirator if there is potential to exceed exposure limit(s).

Eye/face protection: Safety goggles or safety glasses with side shields.

Skin protection: Chemical resistant, impermeable gloves. Butyl rubber gloves.

9. PHYSICAL AND CHEMICAL PROPERTIES

Physical state: Liquid
Color: Gray
Odor: Mild
Odor threshold: Not available
pH: Not available
Vapor pressure: Not available
Boiling point/range: Not available
Melting point/ range: Not available
Vapor density: Not available
Flash point: > 93 °C (> 199.4 °F) Setaflash Closed Cup
Flammable/Explosive limits - lower: Not available
Flammable/Explosive limits - upper: Not available
Autoignition temperature: Not available
Evaporation rate: Not available
Solubility in water: Partially soluble
Partition coefficient (n-octanol/water): Not available
VOC content: < 1 %; < 10 g/l

10. STABILITY AND REACTIVITY

Stability: Stable

Hazardous reactions: Will not occur.

Hazardous decomposition products: Ammonia. Oxides of carbon. Oxides of nitrogen. Nitric acid. Irritating organic fragments.

Incompatible materials: Strong oxidizing agents. Organic acids. Mineral acids. Bases. Halogenated compounds. This product slowly corrodes copper, aluminum, zinc and galvanized surfaces.

Conditions to avoid: Direct sources of heat. Store away from incompatible materials.

11. TOXICOLOGICAL INFORMATION

Hazardous components	NTP Carcinogen	IARC Carcinogen	OSHA Carcinogen (Specifically Regulated)
Al-silicate Kaolin	No	No	No
Salicylic acid	No	No	No
Glycerol	No	No	No
2,4,6-Tris(dimethylaminomethyl)phenol	No	No	No
Silica, amorphous, fumed, crystal-free	No	No	No

Hazardous components	Health Effects/Target Organs
Al-silicate Kaolin	Nuisance dust
Salicylic acid	Irritant
Glycerol	Blood, Irritant, Kidney, Nuisance dust
2,4,6-Tris(dimethylaminomethyl)phenol	Irritant, Allergen
Silica, amorphous, fumed, crystal-free	Nuisance dust

12. ECOLOGICAL INFORMATION

Ecological information: Not available

13. DISPOSAL CONSIDERATIONS

Information provided is for unused product only.

Recommended method of disposal: Follow all local, state, federal and provincial regulations for disposal.

Hazardous waste number: Not a RCRA hazardous waste.

14. TRANSPORT INFORMATION

The shipping classifications in this sections are for non-bulk packaging only (unless otherwise specified). Shipping classification may be different for bulk packaging.

U.S. Department of Transportation Ground (49 CFR)

Proper shipping name: Not regulated
Hazard class or division: None
Identification number: None
Packing group: None

International Air Transportation (ICAO/IATA)

Proper shipping name: Not regulated
Hazard class or division: None
Identification number: None
Packing group: None

Water Transportation (IMO/IMDG)

Proper shipping name: Not regulated
Hazard class or division: None
Identification number: None
Packing group: None

15. REGULATORY INFORMATION

United States Regulatory Information

TSCA 8 (b) Inventory Status: All components are listed or are exempt from listing on the Toxic Substances Control Act Inventory.
TSCA 12(b) Export Notification: None above reporting de minimus

CERCLA/SARA Section 302 EHS: None above reporting de minimus
CERCLA/SARA Section 311/312: Immediate Health, Delayed Health

CERCLA/SARA 313:	None above reporting de minimus
California Proposition 65:	This product contains a chemical known in the State of California to cause cancer. This product contains a chemical known to the State of California to cause birth defects or other reproductive harm.

Canada Regulatory Information

CEPA DSL/NDSL Status:	All components are listed on or are exempt from listing on the Canadian Domestic Substances List.
WHMIS hazard class:	D.2.A, D.2.B

16. OTHER INFORMATION

This material safety data sheet contains changes from the previous version in sections: New Material Safety Data Sheet format.

Prepared by: Gary Pierson, Sr. Regulatory Affairs Specialist

DISCLAIMER: The data contained herein are furnished for information only and are believed to be reliable. However, Henkel Corporation does not assume responsibility for any results obtained by persons over whose methods Henkel Corporation has no control. It is the user's responsibility to determine the suitability of Henkel's products or any production methods mentioned herein for a particular purpose, and to adopt such precautions as may be advisable for the protection of property and persons against any hazards that may be involved in the handling and use of any of Henkel Corporation's products. In light of the foregoing, Henkel Corporation specifically disclaims all warranties, express or implied, including warranties of merchantability and fitness for a particular purpose, arising from sale or use of Henkel Corporation's products. Henkel Corporation further disclaims any liability for consequential or incidental damages of any kind, including lost profits.

PRODUCT DATA

W. R. MEADOWS SEALTIGHT

CSI Code: 03 15 00

NO. 323

AUGUST 2009
(Supersedes April 2004)

CERAMAR®

Flexible Foam Expansion Joint

DESCRIPTION

CERAMAR is a flexible foam expansion joint filler composed of a unique synthetic foam of isomeric polymers in a very small, closed-cell structure. Gray in color, CERAMAR is a lightweight, flexible, highly resilient material offering recovery qualities of over 99%. The compact, closed-cell structure will absorb almost no water.

USES

CERAMAR flexible foam expansion joint filler provides an excellent joint filler and back-up material for use in either horizontal or vertical applications where expansion and contraction movements must be accommodated. CERAMAR is compatible with all currently popular cold-applied sealants, caulks, and hot-pour joint sealing compounds. It is lightweight and easy to cut or form in the field without waste.

CERAMAR compresses easily for use with shrinkage-compensating concrete and it may be used to relieve stress and pressure in concrete pavements.

LEED INFORMATION

May help contribute to LEED credits:

- MR Credit 5.1: Regional Materials: 10% Extracted, Processed & Manufactured Regionally
- MR Credit 5.2: Regional Materials: 20% Extracted, Processed & Manufactured Regionally

FEATURES/BENEFITS

- May be sealed with hot- or cold-applied sealants.
- User friendly, lightweight, flexible foam ... forms or wraps around curved or circular surfaces.
- Cuts easily on the job with a razor knife ... no breakage or waste.
- Offers high resiliency and 99% recovery qualities ... low compression values ... non-extruding ... minimal water absorption.
- Resists ultraviolet degradation ... will not rot or deteriorate.
- Non-impregnated ... no staining or bleeding.
- Bonds easily with common cartridge adhesives.
- Non-gassing.

SPECIFICATIONS

- ASTM D 5249, Type 2
- ASTM D 1752, Sections 5.1 - 5.4, with compression requirement modified to 10 psi (7.03 g/mm^2) minimum and 25 psi (17.58 g/mm^2) maximum.
- ASTM D 7174-05

TECHNICAL DATA*

Compression, 50%	13 psi (9 g/mm^2) 89.6 kPa
Extrusion	0.1 inch (2.5 mm)
Recovery	99.21%
Water absorption, volume %	0.246

Test Method - ASTM D 545 [1/2" (12.7 mm) thick test specimen]
* All technical data is typical information, but may vary due to test methods, conditions, and operators.

CONTINUED ON REVERSE SIDE…

W. R. MEADOWS, INC.
P.O. Box 338 • HAMPSHIRE, IL 60140-0338
Phone: 847/214-2100 • Fax: 847/683-4544
1-800-342-5976
www.wrmeadows.com

HAMPSHIRE, IL / CARTERSVILLE, GA / YORK, PA
FORT WORTH, TX / BENICIA, CA / POMONA, CA
GOODYEAR, AZ / MILTON, ON / ST. ALBERT, AB

PACKAGING

Furnished in standard sheets 48" (1.22 m) wide, 10' (3.05m) long. Also available in precut widths of 2" - 46" (50.8 mm - 1.17 m).

Thickness	Approx. Wt./100 ft.^{2}	Approx. Wt./100 m^2	Pcs. per Bundle	Shipping Wt./Bundle
1/4" (6.4 mm)	3.13 lb.	15.29 kg	100	160 lb. (72.58 kg)
3/8" (9.5 mm)	4.70 lb.	22.93 kg	100	240 lb. (108.86 kg)
1/2" (12.7 mm)	6.25 lb.	30.52 kg	75	250 lb. (113.40 kg)
3/4" (19.1 mm)	9.40 lb.	45.90 kg	50	240 lb. (108.86 kg)
1" (25.4 mm)	12.50 lb.	61.03 kg	40	260 lb. (117.94 kg)

APPLICATION

For horizontal applications, position CERAMAR against the forms, at interrupting columns and objects or adjacent to abutting structures, before placing the concrete. Vertical applications may call for CERAMAR to be placed between panels, panel-to-column joints, or in block wall joints prior to sealing. CERAMAR may be used with all hot- and cold-applied sealants.

PRECAUTIONS

Due to its light weight, CERAMAR will float and must be held in place by compression or with a sealant.

HEALTH AND SAFETY

Refer to Material Safety Data Sheet (MSDS) for complete health and safety information.

For most current data sheet, further LEED information, and MSDS, visit www.wrmeadows.com.

LIMITED WARRANTY

"W. R. MEADOWS, INC. warrants at the time and place we make shipment, our material will be of good quality and will conform with our published specifications in force on the date of acceptance of the order." Read complete warranty. Copy furnished upon request.

Disclaimer

The information contained herein is included for illustrative purposes only, and to the best of our knowledge, is accurate and reliable. W. R. MEADOWS, INC. cannot however under any circumstances make any guarantee of results or assume any obligation or liability in connection with the use of this information. As W. R. MEADOWS, INC. has no control over the use to which others may put its product, it is recommended that the products be tested to determine if suitable for specific application and/or our information is valid in a particular circumstance. Responsibility remains with the architect or engineer, contractor and owner for the design, application and proper installation of each product. Specifier and user shall determine the suitability of products for specific application and assume all responsibilities in connection therewith.

© W. R. MEADOWS 2003

Direct-View LED Traffic Controller
DOT2424RG-175

PRODUCT NUMBER
5651

CABINET DIMENSIONS
24" H x 24" W x 5" D

ILLUMINATION SOURCE
Super bright, narrow viewing angle LEDs
Available in green, red, blue, amber, and white LEDs
Messages "blankout" when turned off, eliminating confusion
Long life, solid state lighting

ELECTRICAL
Integrated solid state power supply
Photocell for auto photodimming
Standard Voltage: 120 VAC, Optional Voltages: 9-36 V, 240 VAC, 277 VAC
Maximum amps per lighted message (at 120 V) shown in the table below
UL/CUL approved for wet locations

CONSTRUCTION
Faces: Single Faced Sign
Cabinet: (DOT): NEMA 4X Rated, 1/8" wall T5052 aluminum cabinet with continuously welded seams. Optional Visor
Door: Continuous hinge with a 1" x 1/4" silicone gasket and stainless steel tool free door latches
Face Material: Impact resistant, 1/4" thick smoke tinted polycarbonate

FINISH
Standard Cabinet Color: Black
Custom colors available upon request

MESSAGE	COLOR	HEIGHT	AMPS
X	30° Red Round	18.0"	0.17
Down Arrow	30° Green Round	18.0"	0.13

Trans-Tech
4999 Pittsburgh Ave.
Erie, PA 16509
Phone: (888) 811-7010
Fax: (814) 836-8401
Email: sales@transportation-tech.com
Website: www.transportation-tech.com

Proudly Made in the USA

Product View

NOTE: Sign image may not exactly represent the finished product. For illustration purposes only.

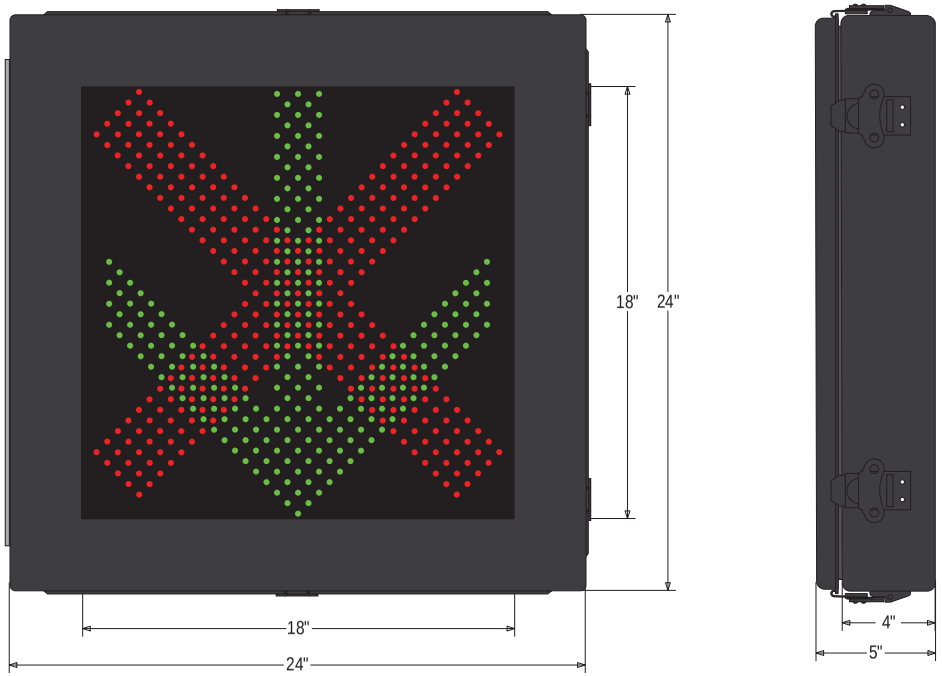

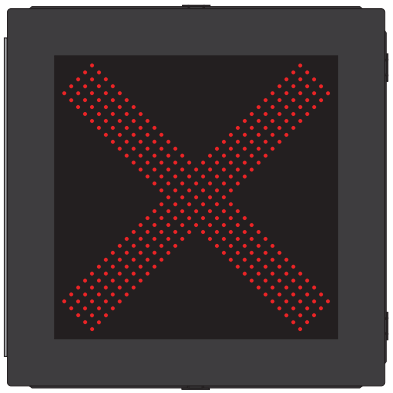

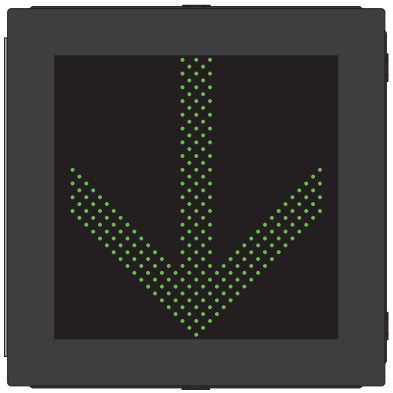

R-325
G-229

Copyright (C) 2013 Trans-Tech

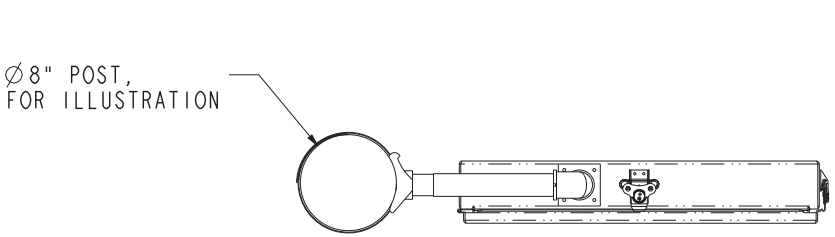

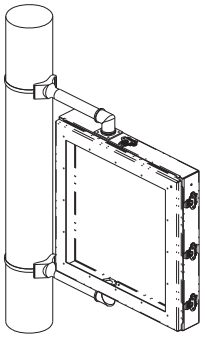

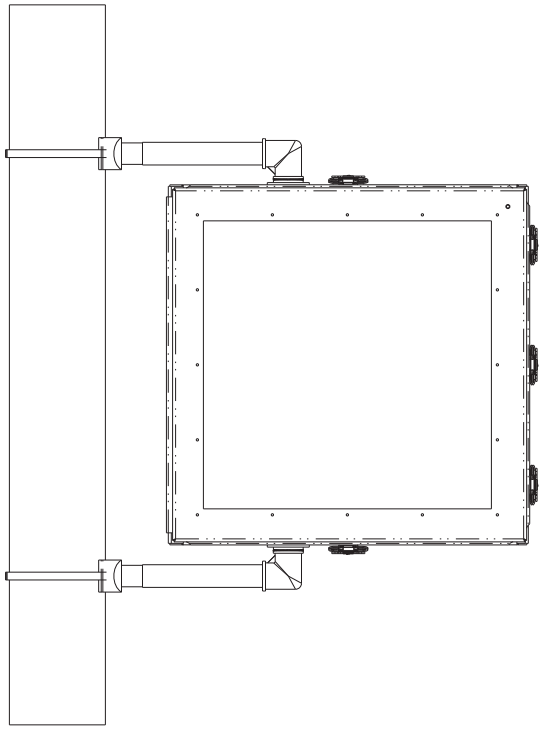

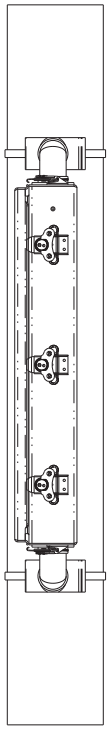

AP-F21

TYP TOL: ±1/16" ANGLES: ±2°		DATE: 10-MAR-11 SHEET 1 OF 3	3030 DOT, PELCO-MOUNTING	INV ID#:
		SignalTech	JDG	PROD ID#:
			4985 Pittsburgh Ave Erie, PA 16509	CUST ID#:

AP-F22

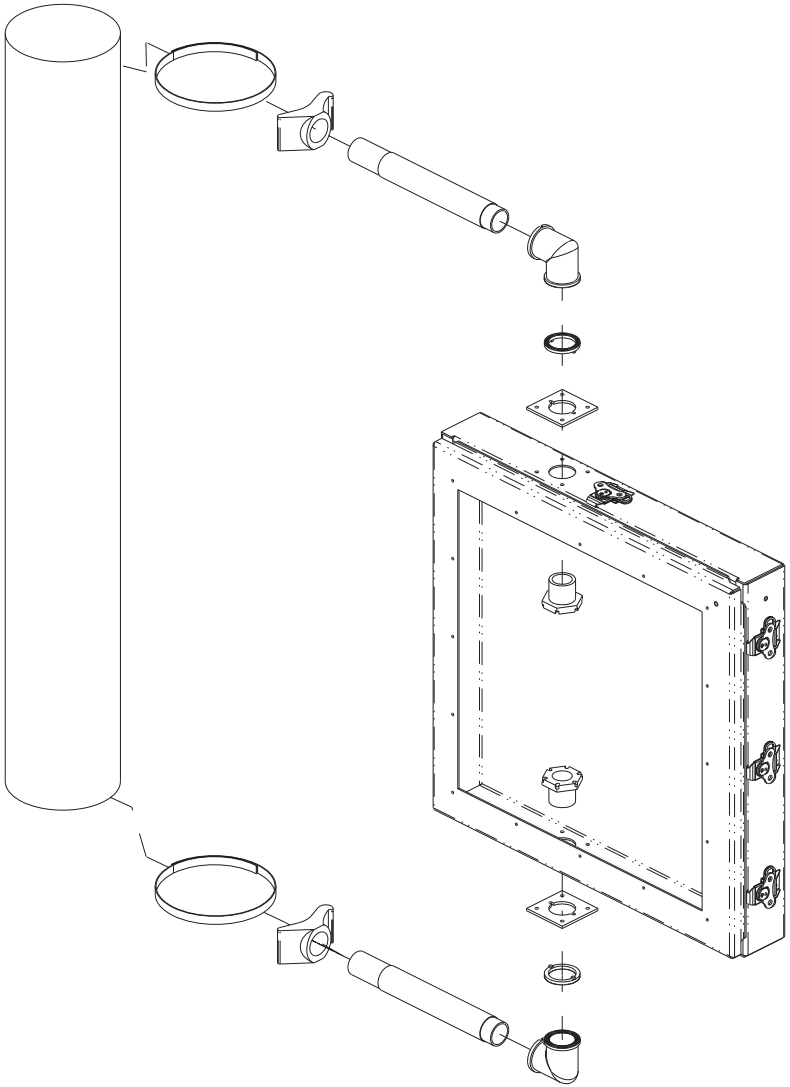

TYP TOL: ±1/16" ANGLES: ± 2°		DATE: 10-MAR-11 SHEET 2 OF 3	3030 DOT, PELCO-MOUNTING	INV ID#:
		SignalTech	JDG	PROD ID#:
			4985 Pittsburgh Ave Erie, PA 16509	CUST ID#:

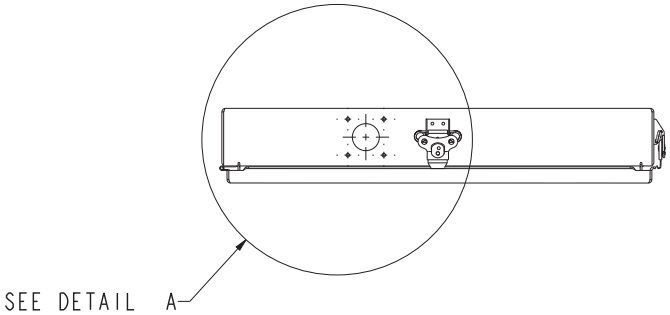

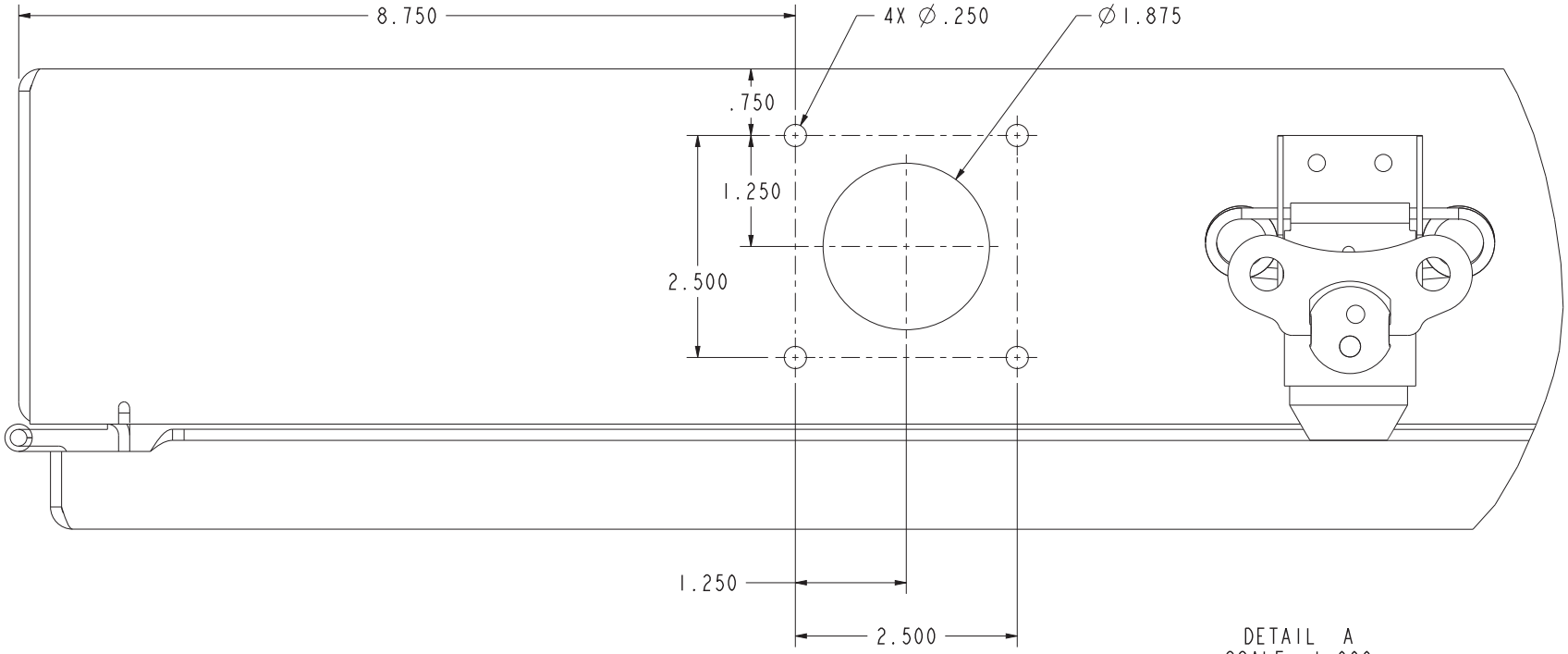

DETAIL A
SCALE 1.000

AP-F23

TYP TOL: ±1/16" ANGLES: ± 2°		DATE: 10-MAR-11 SHEET 3 OF 3	3030 DOT, PELCO-MOUNTING	INV ID#:
		SignalTech	JDG	PROD ID#:
			4985 Pittsburgh Ave Erie, PA 16509	CUST ID#:

Vanguard® VS-5220 VSLS

Daktronics Vanguard® VS-5220 variable speed limit signs (VSLS) are designed to be an integrated, enforceable, and affordable part of a traffic management system. The signs provide high legibility 18-inch digits that are easily changed as traffic and weather conditions change.

The VS-5220 features an active LED speed limit pixel matrix and surrounding reflective 48-inch wide by 60-inch tall MUTCD-compliant static panel. The high-resolution LED pixel matrix allows clearly formed black digits on a white background that approximate the E-series fonts specified by the MUTCD. In freeway situations, the signs are nearly indistinguishable from static signs. All of this makes them more easily enforced than the amber VSLS seen in the market today.

The signs use a blend of long-life red, green, and blue LEDs to create the white light used for the speed limit background. An integrated light sensor automatically adjusts the LED intensity for all ambient lighting levels. Under full sunlight, the LEDs match the reflectivity of the surrounding speed limit panel. At night, the LEDs dim to a very legible level that will not blind drivers and is not washed out by headlights. Our long-life LED technology is designed for a 100,000 hour life and consumes less than 150 watts at full intensity.

The VS-5220 is designed for the roadside environment and features a number of features typically found only in high-end variable message signs (VMS). A forced-air ventilation system provides filtered air to keep the sign cool. Pixel diagnostics allow remote monitoring of the sign to ensure legibility, and the internal controller and mounting location for communication equipment eliminates the need for costly traffic cabinets.

The VS-5220 features a powerful NTCIP-compliant controller that integrates into nearly any traffic management system. The posted speed limit can be scheduled or controlled manually. The built-in logging function keeps track of all speed limit changes. Daktronics offers Vanguard software, which can control, configure, and monitor the VSLS, as well as any other NTCIP-compliant DMS.

The Vanguard VS-5220 VSLS are the best choice for a speed management solution. The signs offer the features needed, and allow integration into any NTCIP-compatible traffic management system.

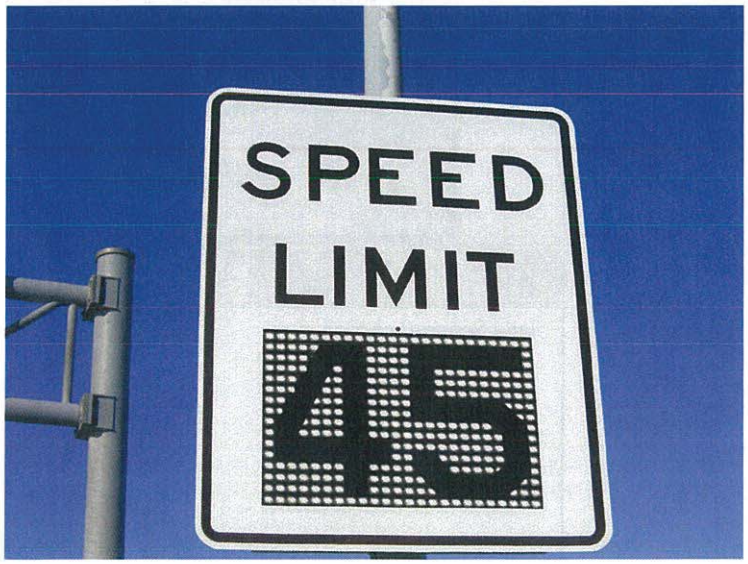

Vanguard® VS-5220 VSLS

Key Features

Dynamic Sign Panel

- Programmable matrix capable of two - 18-inch (473 mm) speed digits
- Black digits on white background
- Legible from greater than 1000 ft (305 m)
- High-intensity LED technology
- Wide 30-degree LED viewing angle
- Minimum brightness of 12,400 cd/m2
- Pixel self-diagnostics ensure legibility
- Contrast-enhancing louvers shield pixels from sunlight
- Built-in pixel diagnostics monitor LED operation
- Automatic brightness control using integrated light sensor

Static Sign Panel

- 48-inch by 60-inch aluminum panel
- MUTCD-compliant
- Reflective white 3M sheeting

Cabinet Style

- Lightweight all-aluminum cabinet construction
- Front service access cabinet for easy maintenance
- Forced-air, filtered ventilation system keeps sign cool
- Mounts to existing poles (hardware not included)

Control System & Diagnostics

- Internal NTCIP-compliant controller
- Automatic speed change logging
- Manual or scheduled speed control
- Available Vanguard control software

DAKTRONICS

Vanguard® VS-5220 VSLS

Specifications

Dynamic Sign Panel Specifications
- Pixel Matrix: 16 rows by 24 columns
- Pixel Pitch: 1.33 in (34 mm)
- Default Font Size: 14 rows by 10 columns
- Active Area: 1'9" H x 2'8" W (544 mm x 816 mm)

Static Sign Panel Specifications
- MUTCD-compiant speed limit panel
- 60" H x 48" W (1.52 m x 1.22 m) panel
- Reflective white 3M sheeting with black E-series lettering

Physical Specifications
- Speed Limit Panel Size: 60" H x 48" W (1.52 m x 1.22 m)
- Sign Cabinet Size: 27" H x 35" W x 6" D (686 mm x 889 mm x 152 mm)
- Sign Weight: 100 lbs (45.4 kg)
- Operating Temperature Range: -40° F to +140° F (-40° C to +60° C)
- Humidity Range: 0 to 99%, non-condensing
- 120 VAC single-phase power (2 wires plus ground)
- Max Power: 197 watts
- Typical Power: 145 watts

Controller Specifications
- NTCIP-compatible controller
- Compatible with dial-up, cellular, fiber, Ethernet, radio, RS-232, RS-422, and other communication devices
- Controller mounted within cabinet
- Internal mounting shelf for communication equipment

Design and Manufacturing Standards
- NTCIP-compliant control system
- Designed to AASHTO wind-load requirements
- Welders certified to AWS D1.2
- NEMA 3R cabinet rating

NTCIP Communication Standards
- NTCIP 1203 – DMS Objects
- NTCIP 1201 – Global Objects
- NTCIP 1101 – STMF
- NTCIP 2101 – PMPP/RS-232
- NTCIP 2103 – PPP/RS-232
- NTCIP 2104 – Ethernet
- NTCIP 2202 – TCP/IP
- NTCIP 2301 – STMF

Daktronics VSLS versus Static Sign

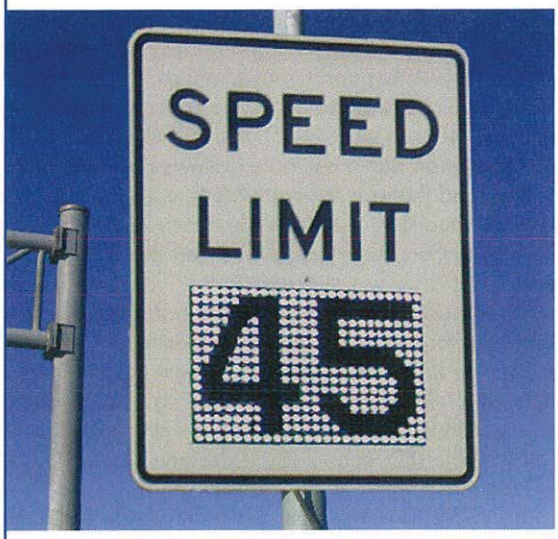

Vanguard® VS-5220 VSLS

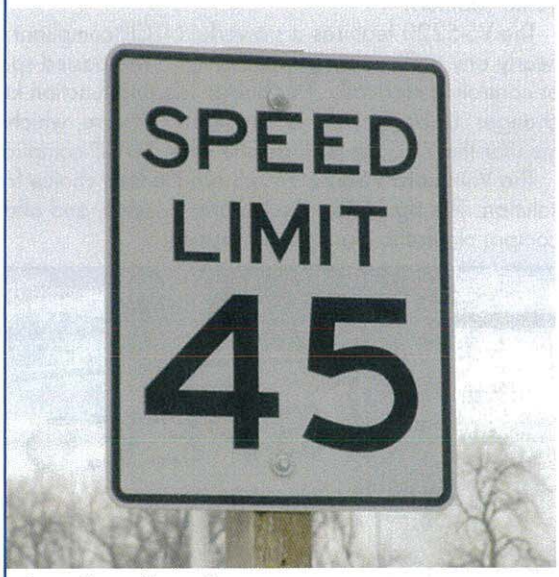

Static Speed Limit Sign

117 Prince Drive PO Box 5120 Brookings, SD 57006-5120
tel 888-DAKTRAN 605-697-4067 fax 605-697-4700
www.daktronics.com/its e-mail transportation@daktronics.com
Vanguard® is a trademark of Daktronics
Copyright © 2007 Daktronics SL-09868 Rev 01 110907 Page 2 of 2

DAKTRONICS®

SIDE VIEW

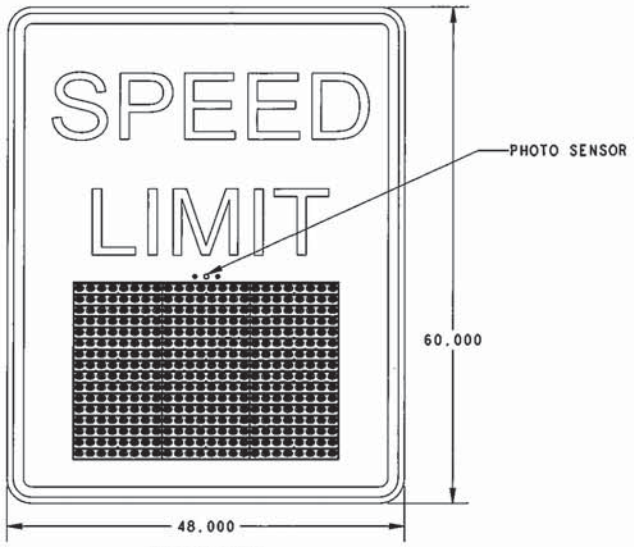

FRONT VIEW

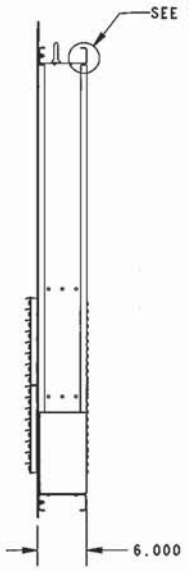

SIDE VIEW

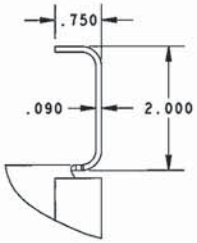

DETAIL A
TYPICAL MOUNTING
FLANGE DIMENTIONS
SCALE 1/2

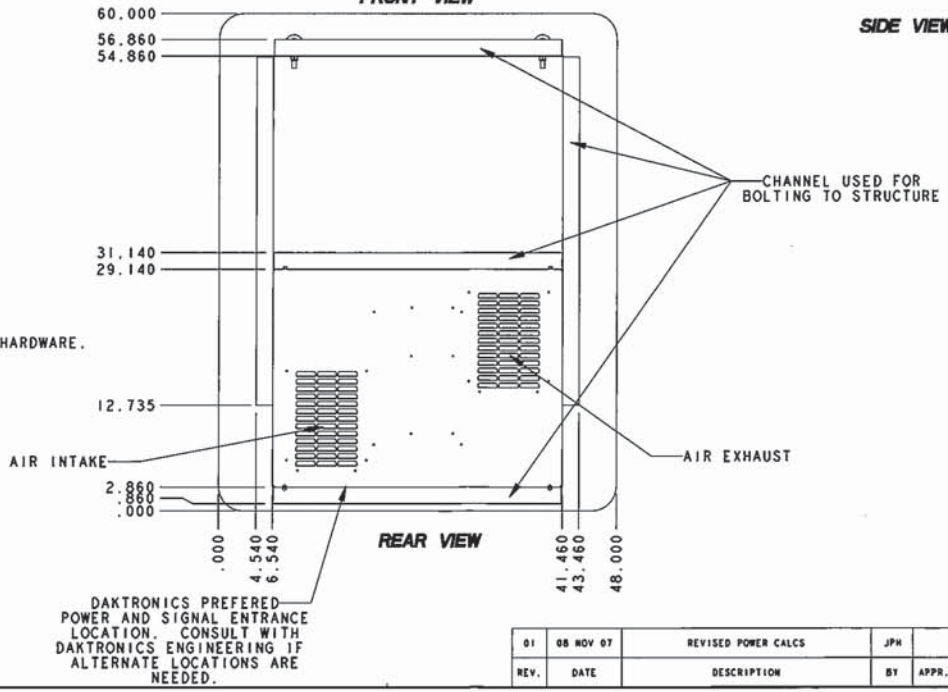

REAR VIEW

NOTES:
1) MATRIX SIZE 16 X 24 1.34 (34MM) PIXEL SPACING
2) REVERSE FONT USED FOR BLACK LETTERING ON WHITE BACKGROUND
3) REFLECTIVE FACE
4) DIMENSIONS ARE IN INCHES UNLESS OTHERWISE NOTED.
5) MAINTANCE OF DISPLAY IS VIA MODULES.
6) ALL ALLUMINUM CONSTRUCTION WITH STAINLESS STEEL HARDWARE.
7) WEIGHT OF DISPLAY IS APPROX. 100 LBS.
8) POWER CALCS: 197 MAX WATTS 145 TYP WATTS

REV.	DATE	DESCRIPTION	BY	APPR.
01	08 NOV 07	REVISED POWER CALCS	JPH	

THE CONCEPTS EXPRESSED AND DETAILS SHOWN ON THIS DRAWING ARE CONFIDENTIAL AND PROPRIETARY. DO NOT REPRODUCE BY ANY MEANS, INCLUDING ELECTRONICALLY WITHOUT THE EXPRESSED WRITTEN CONSENT OF DAKTRONICS, INC. COPYRIGHT 2004 DAKTRONICS, INC.

DAKTRONICS, INC. BROOKINGS, SD 57006

PROJ: VANGUARD VMS

TITLE: SHOP DRAWING, VARIABLE SPEED LIMIT SIGN

DES. BY: JSYRSTAD DRAWN BY: JHALIBU DATE: 22 OCT 07

REVISION SHEET 1 OF DWG 323355 SCALE: 1=15

1398 - E07B - 323355

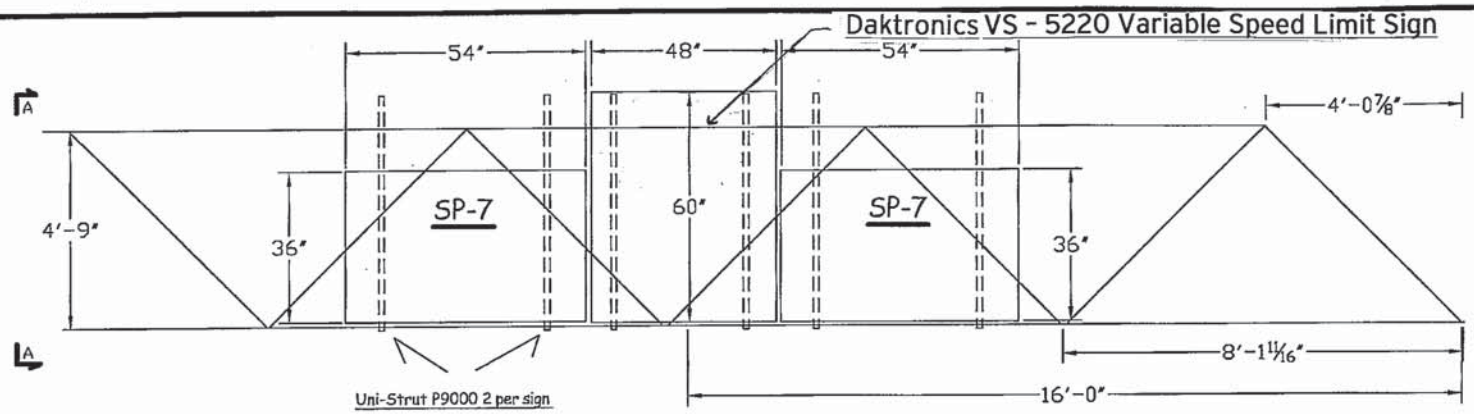

SPACE FRAME DETAIL

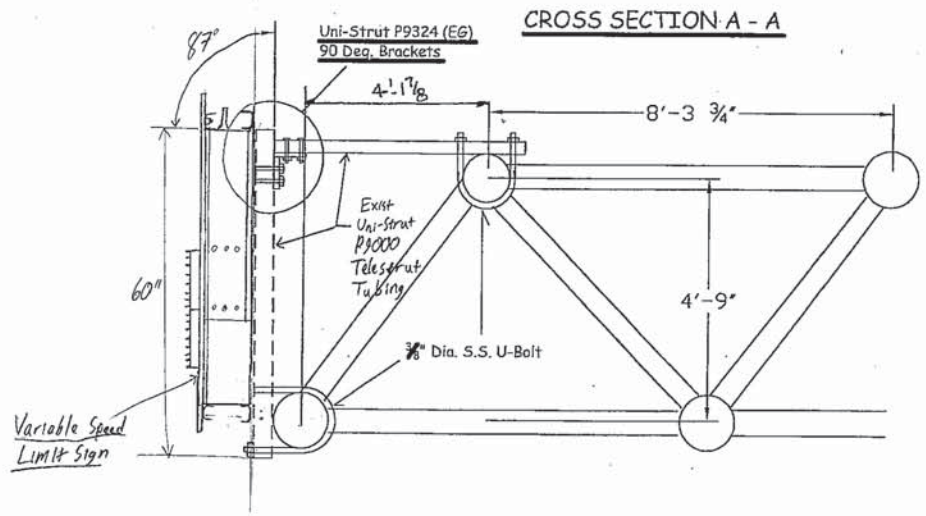

GENERAL NOTES:

1. All proposed Uni-strut parts and mounting hardware will be hot dip galvanized (HG) complying with ASTM A123 or A153.
2. All bolt attachments to the dynamic sign will be field drilled.
3. The bottom of the new sign is to be aligned with the existing signs.
4. Actual bolt locations shall be determined by the contractor. Connections shall be made with a minimum of 4 – 3/8 in. diameter A307 bolts, or approved equals. There should be two bolts at the top and two at the bottom +/-.
5. All bolted connections shall be made through the dynamic message sign mounting flanges and Uni-strut support brackets.
6. The contractor may relocate the support brackets. The support brackets shall also be spaced at no less than 24 inches.

APPENDIX G

SIGN DETAILS

SIGN DETAIL
1:40

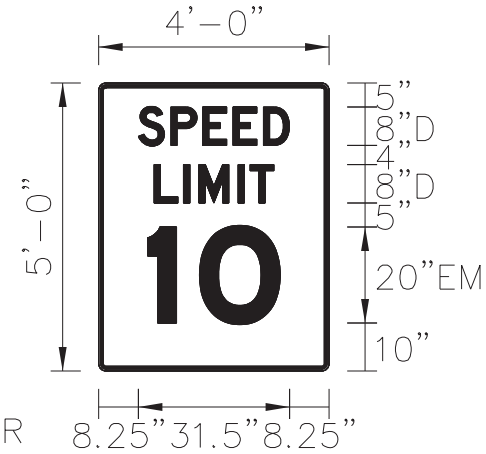

BORDER
R=1.13"
TH=0.63"
IN=0.38"

Panel Style: regulatory.ssi
M.U.T.C.D.: 2009 Edition

SIGN NUMBER	R2-1(10)
WIDTH x HGHT.	4'-0" x 5'-0"
BORDER WIDTH	0.63"
CORNER RADIUS	0"
MOUNTING	Overhead
BACKGROUND	TYPE: Reflective
	COLOR: White
LEGEND/BORDER	TYPE: Reflective
	COLOR: Black/Black

SYMBOL	ROT	X	Y	WID	HT

Panel Style: regulatory.ssi
Dimensions are in inches.tenths

Letter locations are panel edge to lower left corner

LETTER POSITIONS (X)																				LENGTH	SERIES/SIZE
S	P	E	E	D																	D 2000
8.2	15	21.7	28	34.3																31.5	8
L	I	M	I	T																	D 2000
11.5	17.7	20.9	29	31.5																25	8
1	0																				EM 2000
10.2	21																			27.6	20

SIGN DETAIL
1:40

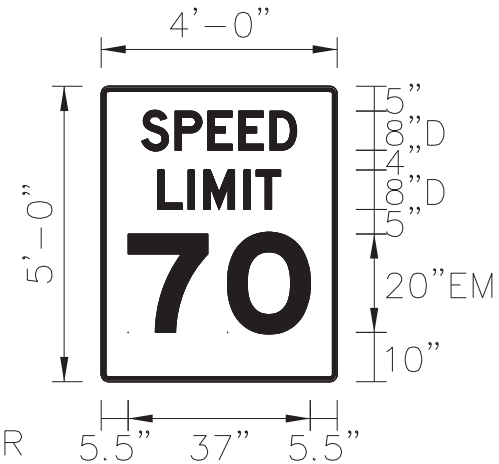

BORDER
R=1.13"
TH=0.63"
IN=0.38"

Panel Style: regulatory.ssi
M.U.T.C.D.: 2009 Edition

SIGN NUMBER	R2–1(70)
WIDTH x HGHT.	4'–0" x 5'–0"
BORDER WIDTH	0.63"
CORNER RADIUS	0"
MOUNTING	Overhead
BACKGROUND	TYPE: Reflective
	COLOR: White
LEGEND/BORDER	TYPE: Reflective
	COLOR: Black/Black

SYMBOL	ROT	X	Y	WID	HT

Panel Style: regulatory.ssi
Dimensions are in inches.tenths

Letter locations are panel edge to lower left corner

LETTER POSITIONS (X)																				LENGTH	SERIES/SIZE
S	P	E	E	D																	D 2000
8.2	15	21.7	28	34.3																31.5	8
L	I	M	I	T																	D 2000
11.5	17.7	20.9	29	31.5																25	8
7	0																				EM 2000
5.5	25.7																			37	20

SIGN DETAIL
1:5

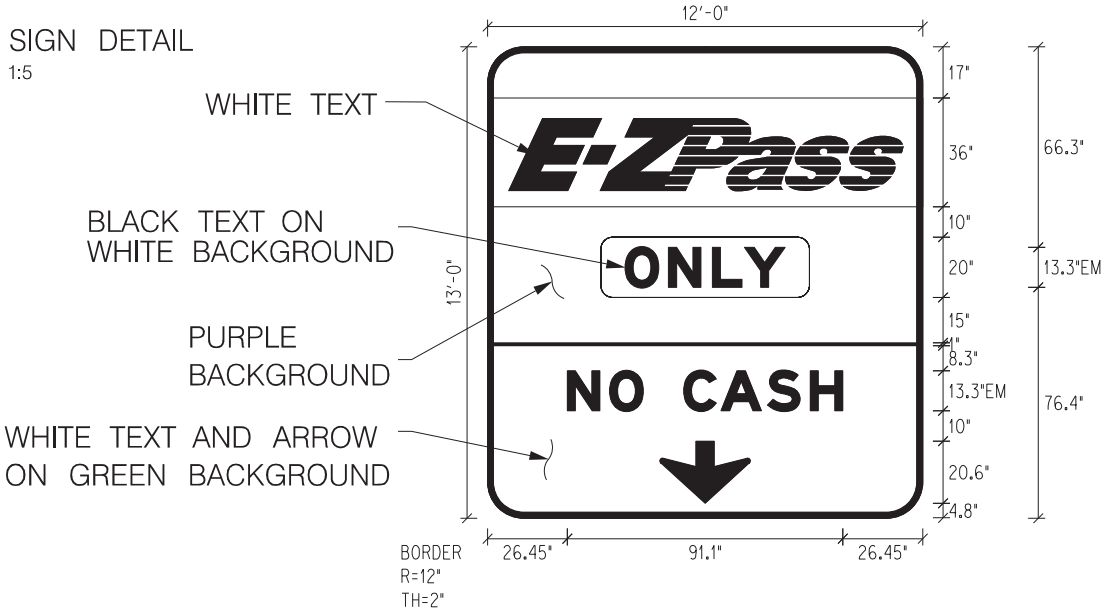

SIGN NUMBER	R3–16	
WIDTH x HGHT.	12'–0" x 13'–0"	
BORDER WIDTH	2"	
CORNER RADIUS	12"	
MOUNTING	Overhead	
BACKGROUND	TYPE:	Reflective
	COLOR:	Purple, Green
LEGEND/BORDER	TYPE:	Reflective
	COLOR:	Varies/White

SYMBOL	ROT	X	Y	WID	HT
EZPASS	0	0	103	144	36
ARDOWN	0	57	4.9	30	20.6

Panel Style: Advance Toll Cash & ORT.ssi
M.U.T.C.D.: 2003 Edition

Panel Style: Advance Toll Cash & ORT.ssi
Dimensions are in inches.tenths

Letter locations are panel edge to lower left corner

LETTER POSITIONS (X)																					LENGTH	SERIES/SIZE
O	N	L	Y																			EM 2000
45.5	59.9	74.4	85																		52.9	13.3
N	O		C	A	S	H																EM 2000
26.4	40.4	51.6	64.9	77.3	92.7	106.8															91.1	13.3

AP-G3

SIGN DETAIL

1:3

SIGN NUMBER	W9–6
WIDTH x HGHT.	12'–6" x 8'–0"
BORDER WIDTH	2"
CORNER RADIUS	12"
MOUNTING	Ground
BACKGROUND	TYPE: Reflective
	COLOR: Yellow
LEGEND/BORDER	TYPE: Reflective
	COLOR: Black

SYMBOL	ROT	X	Y	WID	HT

Panel Style: Advance.ssi

Dimensions are in inches.tenths

Letter locations are panel edge to lower left corner

LETTER POSITIONS (X)																					LENGTH	SERIES/SIZE
P	A	Y		T	O	L	L															EM 2000
24.5	36.4	50.9	64.3	77.6	89.3	103.7	115.6														100.9	13.3
2		M	I	L	E	S																EM 2000
34.2	45	58.3	74.4	80.8	92.8	105															81.5	13.3
C	A	R	S		$	1	.	7	5													EM 2000
18	30.4	46.2	59.4	70.1	83.4	97.3	103.7	107.7	121.2												114	13.3

SIGN DETAIL
1:5

SIGN NUMBER	W9–6a
WIDTH x HGHT.	13'–6" x 8'–0"
BORDER WIDTH	2"
CORNER RADIUS	12"
MOUNTING	Ground
BACKGROUND	TYPE: Reflective
	COLOR: Yellow
LEGEND/BORDER	TYPE: Reflective
	COLOR: Black

SYMBOL	ROT	X	Y	WID	HT

Panel Style: Advance Toll Cash & ORT.ssi
M.U.T.C.D.: 2003 Edition

Panel Style: Advance Toll Cash & ORT.ssi
Dimensions are in inches.tenths

Letter locations are panel edge to lower left corner

LETTER POSITIONS (X)																						LENGTH	SERIES/SIZE
S	T	O	P		A	H	E	A	D														EM 2000
15.4	28.2	39.9	54.3	65	78.3	94.2	108.7	120	135.8													131.1	13.3
P	A	Y		T	O	L	L																EM 2000
30.5	42.4	56.9	70.3	83.6	95.3	109.7	121.6															100.9	13.3
C	A	R	S		$	1	.	7	5														EM 2000
24	36.4	52.2	65.4	76.1	89.4	103.3	109.7	113.7	127.2													114	13.3

AP-G5

SIGN DETAIL
1:7

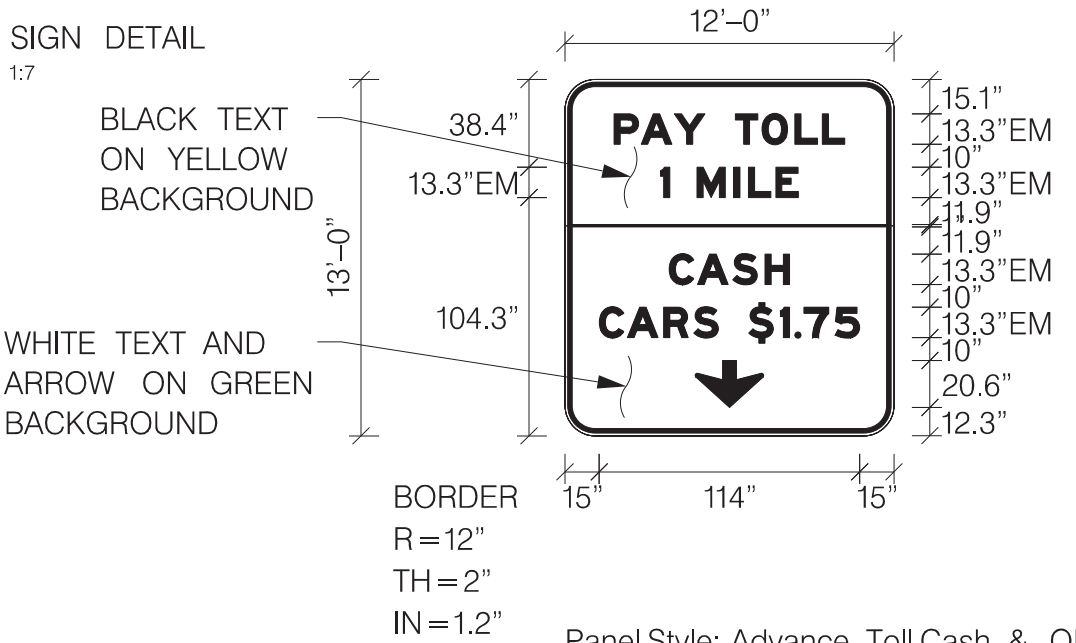

SIGN NUMBER	SP–1
WIDTH x HGHT.	12'–0" x 13'–0"
BORDER WIDTH	2"
CORNER RADIUS	12"
MOUNTING	Overhead
BACKGROUND	TYPE: Reflective
	COLOR: Yellow, Green
LEGEND/BORDER	TYPE: Reflective
	COLOR: Black, White

SYMBOL	ROT	X	Y	WID	HT
ARDOWN	0	57	12.4	30	20.6

Panel Style: Advance Toll Cash & ORT.ssi
M.U.T.C.D.: 2003 Edition

Panel Style: Advance Toll Cash & ORT.ssi
Dimensions are in inches.tenths

Letter locations are panel edge to lower left corner

LETTER POSITIONS (X)

																						LENGTH	SERIES/SIZE
P	A	Y		T	O	L	L																EM 2000
21.5	33.4	47.9	61.3	74.6	86.3	100.7	112.6															100.9	13.3
1	M	I	L	E																			EM 2000
41.9	57.9	73.9	80.3	92.3																		60.3	13.3
C	A	S	H																				EM 2000
45.7	58	73.5	87.6																			52.7	13.3
C	A	R	S		$	1	.	7	5														EM 2000
15	27.4	43.2	56.4	67.1	80.4	94.3	100.7	104.7	118.2													114	13.3

SIGN DETAIL
1:80

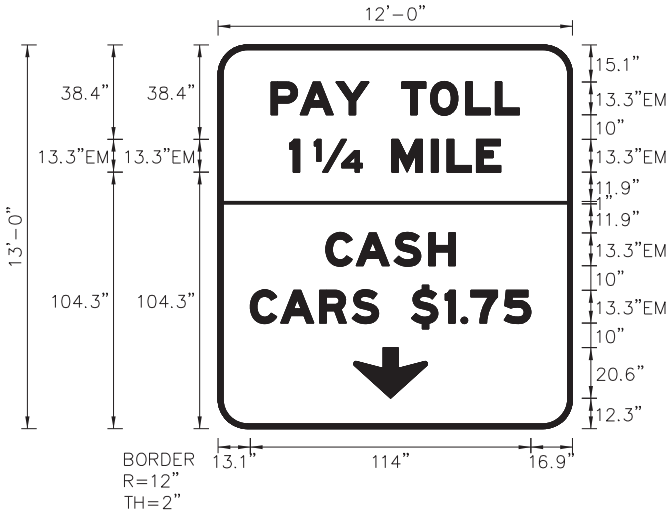

Panel Style: Advance Toll Cash & ORT.ssi
M.U.T.C.D.: 2009 Edition

SIGN NUMBER	SP-1a
WIDTH x HGHT.	12'-0" x 13'-0"
BORDER WIDTH	2"
CORNER RADIUS	0"
MOUNTING	Overhead
BACKGROUND	TYPE: Reflective
	COLOR: Green / Yellow
LEGEND/BORDER	TYPE: Reflective
	COLOR: Black/White

SYMBOL	ROT	X	Y	WID	HT
ARDOWN	0	55.1	12.3	30	20.6

Panel Style: Advance Toll Cash & ORT.ssi
Dimensions are in inches.tenths

Letter locations are panel edge to lower left corner

LETTER POSITIONS (X)																				LENGTH	SERIES/SIZE
P	A	Y		T	O	L	L														EM 2000
21.5	33.4	47.9	61.3	74.6	86.3	100.7	112.6													100.9	13.3
1	1/4	M	I	L	E																EM 2000
29.1	39.1	70.6	86.7	93.1	105															85.8	13.3
C	A	S	H																		EM 2000
43.7	56.1	71.5	85.6																	52.7	13.3
C	A	R	S		$	1	.	7	5												EM 2000
13.1	25.5	41.3	54.5	65.2	78.5	92.4	98.7	102.7	116.3											114	13.3

SIGN DETAIL

1:6

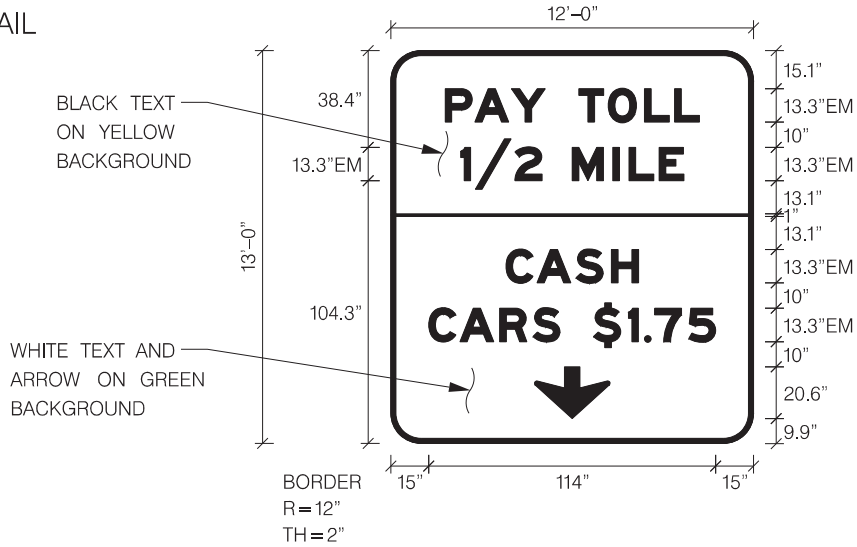

Panel Style: Advance Toll Cash & ORT.ssi
M.U.T.C.D.: 2003 Edition

SIGN NUMBER	SP–2	
WIDTH x HGHT.	12'–0" x 13'–0"	
BORDER WIDTH	2"	
CORNER RADIUS	12"	
MOUNTING	Overhead	
BACKGROUND	TYPE:	Reflective
	COLOR:	Yellow, Green
LEGEND/BORDER	TYPE:	Reflective
	COLOR:	Black, White

SYMBOL	ROT	X	Y	WID	HT
ARDOWN	0	57	9.8	30	20.6

Panel Style: Advance Toll Cash & ORT.ssi
Dimensions are in inches.tenths

Letter locations are panel edge to lower left corner

LETTER POSITIONS (X)																					LENGTH	SERIES/SIZE
P	A	Y		T	O	L	L															EM 2000
21.5	33.4	47.9	61.3	74.6	86.3	100.7	112.6														100.9	13.3
1	/	2	M	I	L	E																EM 2000
27.7	33.5	49.2	72	88.1	94.5	106.5															88.6	13.3
C	A	S	H																			EM 2000
45.7	58	73.5	87.6																		52.7	13.3
C	A	R	S		$	1	.	7	5													EM 2000
15	27.4	43.2	56.4	67.1	80.4	94.3	100.7	104.7	118.2												114	13.3

SIGN DETAIL
1:60

Panel Style: guide_fwy_general–services.ssi
M.U.T.C.D.: 2009 Edition

SIGN NUMBER	SP–3
WIDTH x HGHT.	13'–6" x 8'–0"
BORDER WIDTH	2"
CORNER RADIUS	0"
MOUNTING	Overhead
BACKGROUND	TYPE: Reflective
	COLOR: Blue
LEGEND/BORDER	TYPE: Reflective
	COLOR: White/White

SYMBOL	ROT	X	Y	WID	HT

Panel Style: guide_fwy_general–services.ssi
Dimensions are in inches.tenths

Letter locations are panel edge to lower left corner

LETTER POSITIONS (X)																				LENGTH	SERIES/SIZE
N	E	E	D		T	O		P	A	Y											EM 2000
17.9	31	42.4	53.8	63.5	75.5	86.1	96.2	108.2	118.9	131.9										126.1	12
A		T	O	L	L	?															EM 2000
42.7	54.8	66.8	77.3	90.3	101.1	111.1														76.7	12
C	A	L	L																		EM 2000
58.4	69.6	83.9	94.7																	45.1	12
1	_	8	8	8	_	M	T	A	_	P	A	S	S								EM 2000
9.9	15.5	21.3	33.4	45.5	56.8	63.1	76.4	86.2	99.2	105.4	116.1	130	142.4							142.2	12

SIGN DETAIL

1:4

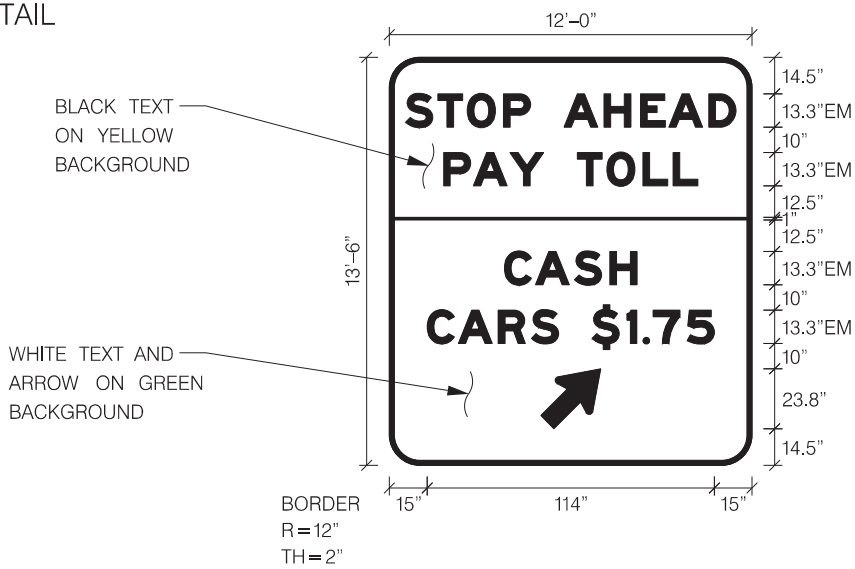

Panel Style: Advance Toll Cash & ORT.ssi
M.U.T.C.D.: 2003 Edition

Panel Style: Advance Toll Cash & ORT.ssi
Dimensions are in inches.tenths

Letter locations are panel edge to lower left corner

SIGN NUMBER	SP–4
WIDTH x HGHT.	12'–0" x 13'–6"
BORDER WIDTH	2"
CORNER RADIUS	12"
MOUNTING	Overhead
BACKGROUND	TYPE: Reflective
	COLOR: Yellow, Green
LEGEND/BORDER	TYPE: Reflective
	COLOR: Black, White

SYMBOL	ROT	X	Y	WID	HT
ARUP	315	60.1	14.5	20	30

LETTER POSITIONS (X)

																						LENGTH	SERIES/SIZE
S	T	O	P		A	H	E	A	D														EM 2000
6.4	19.2	30.9	45.3	56	69.3	85.2	99.7	111	126.8													131.1	13.3
P	A	Y		T	O	L	L																EM 2000
21.5	33.4	47.9	61.3	74.6	86.3	100.7	112.6															100.9	13.3
C	A	S	H																				EM 2000
45.7	58	73.5	87.6																			52.7	13.3
C	A	R	S		$	1	.	7	5														EM 2000
15	27.4	43.2	56.4	67.1	80.4	94.3	100.7	104.7	118.2													114	13.3

SIGN DETAIL
1:80

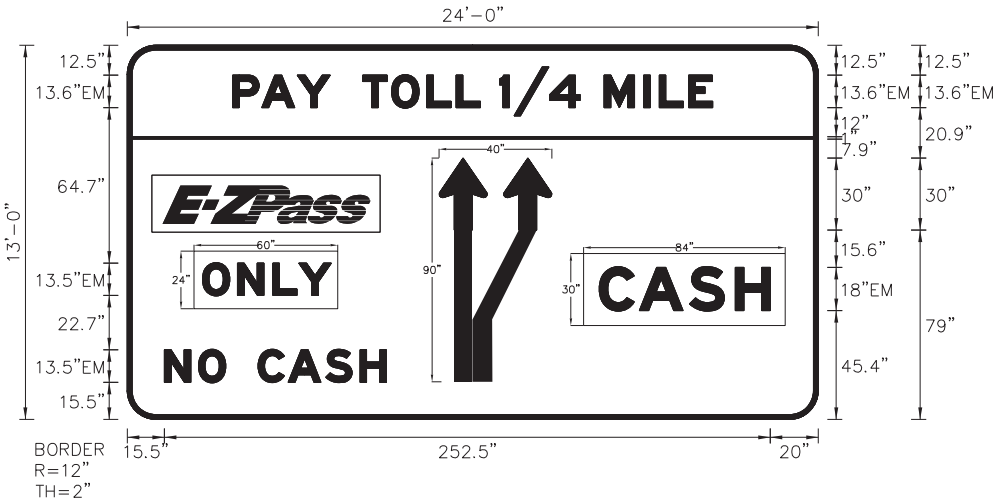

Panel Style: Guide Toll Distance.ssi
M.U.T.C.D.: 2009 Edition

SIGN NUMBER	SP-5a
WIDTH x HGHT.	24'-0" x 13'-0"
BORDER WIDTH	2"
CORNER RADIUS	0"
MOUNTING	Overhead
BACKGROUND	TYPE: Reflective
	COLOR: Green / Yellow
LEGEND/BORDER	TYPE: Reflective
	COLOR: Black/White

SYMBOL	ROT	X	Y	WID	HT
AR_Type D	0	130	79	20	30
AR_Type D	0	156.9	79	20	30

Panel Style: Guide Toll Distance.ssi
Dimensions are in inches.tenths

Letter locations are panel edge to lower left corner

LETTER POSITIONS (X)																				LENGTH	SERIES/SIZE
P	A	Y		T	O	L	L	1	/	4	M	I	L	E							EM 2000
43.9	56.1	70.9	84.6	98.2	110.2	124.9	137.1	155.2	161.2	176.1	198.8	215.2	221.7	234						200.1	13.6
O	N	L	Y																		EM 2000
31.4	46	60.7	71.5																	53.7	13.5
C	A	S	H																		EM 2000
196.7	213.5	234.3	253.4																	71.3	18
N	O		C	A	S	H															EM 2000
15.5	29.7	41	54.5	67.1	82.7	97														92.5	13.5

SIGN DETAIL
1:40

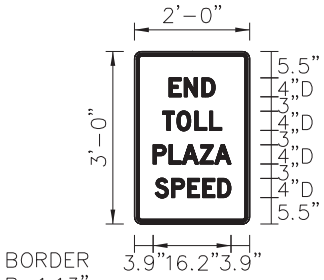

BORDER
R=1.13"
TH=0.63"
IN=0.38"

Panel Style: regulatory.ssi
M.U.T.C.D.: 2009 Edition

SIGN NUMBER	SP-6
WIDTH x HGHT.	2'-0" x 3'-0"
BORDER WIDTH	0.63"
CORNER RADIUS	0"
MOUNTING	Overhead
BACKGROUND	TYPE: Reflective
	COLOR: White
LEGEND/BORDER	TYPE: Reflective
	COLOR: Black/Black

SYMBOL	ROT	X	Y	WID	HT

Panel Style: regulatory.ssi
Dimensions are in inches.tenths

Letter locations are panel edge to lower left corner

LETTER POSITIONS (X)																				LENGTH	SERIES/SIZE
E	N	N																			D 2000
7.2	10.4	14.1																		9.6	4
T	O	L	L																		D 2000
5.9	8.9	12.6	15.7																	12.3	4
P	L	A	Z	A																	D 2000
3.9	7.2	9.9	13.7	16.7																16.2	4
S	P	E	E	D																	D 2000
4.3	7.7	11.1	14.2	17.4																15.8	4

SIGN DETAIL
1:10

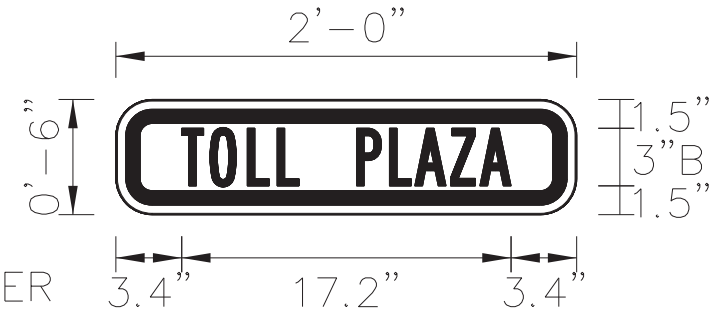

BORDER
R=1.88"
TH=0.5"
IN=0.5"

Panel Style: warning_Rectangular.ssi
M.U.T.C.D.: 2009 Edition

SIGN NUMBER	SP-6P
WIDTH x HGHT.	2'-0" x 0'-6"
BORDER WIDTH	0.75"
CORNER RADIUS	0"
MOUNTING	Overhead
BACKGROUND	TYPE: Reflective
	COLOR: Yellow
LEGEND/BORDER	TYPE: Reflective
	COLOR: Black/Black

SYMBOL	ROT	X	Y	WID	HT

Panel Style: warning_Rectangular.ssi
Dimensions are in inches.tenths

Letter locations are panel edge to lower left corner

LETTER POSITIONS (X)																				LENGTH	SERIES/SIZE
T	O	L	L		P	L	A	Z	A												B 2000
3.4	4.9	6.8	8.4	9.5	12.5	14.3	15.6	17.4	19											17.2	3

SIGN DETAIL

1:3

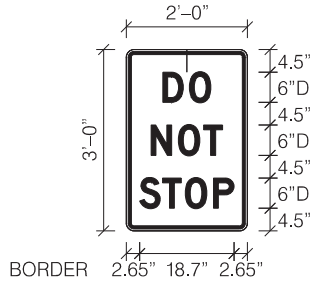

BORDER
R = 1.13"
TH = 0.63"
IN = 0.38"

Panel Style: regulatory.ssi
M.U.T.C.D.: 2003 Edition

SIGN NUMBER	SP–7	
WIDTH x HGHT.	2'–0" x 3'–0"	
BORDER WIDTH	0.63"	
CORNER RADIUS	1.13"	
MOUNTING	Ground	
BACKGROUND	TYPE:	Reflective
	COLOR:	White
LEGEND/BORDER	TYPE:	Reflective
	COLOR:	Black

SYMBOL	ROT	X	Y	WID	HT

Panel Style: regulatory.ssi
Dimensions are in inches.tenths

Letter locations are panel edge to lower left corner

LETTER POSITIONS (X)																					LENGTH	SERIES/SIZE
D	O																					D 2000
7.2	12.5																				9.5	6
N	O	T																				D 2000
4.9	10.3	15.4																			14.2	6
S	T	O	P																			D 2000
2.6	7.2	11.7	17.3																		18.7	6

SIGN DETAIL
1:3

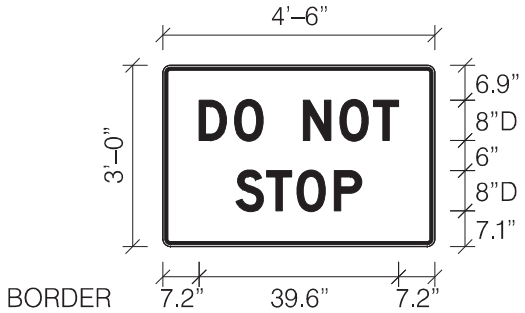

BORDER
R = 1.13"
TH = 0.63"
IN = 0.38"

Panel Style: regulatory.ssi
M.U.T.C.D.: 2003 Edition

SIGN NUMBER	SP–7w	
WIDTH x HGHT.	4'–6" x 3'–0"	
BORDER WIDTH	0.63"	
CORNER RADIUS	1.13"	
MOUNTING	Overhead	
BACKGROUND	TYPE:	Reflective
	COLOR:	White
LEGEND/BORDER	TYPE:	Reflective
	COLOR:	Black

SYMBOL	ROT	X	Y	WID	HT

Panel Style: regulatory.ssi
Dimensions are in inches.tenths

Letter locations are panel edge to lower left corner

LETTER POSITIONS (X)																					LENGTH	SERIES/SIZE
D	O		N	O	T																	D 2000
7.2	14.2	19.9	27.9	35.1	41.8																39.6	8
S	T	O	P																			D 2000
14.5	20.6	26.6	34																		25	8

AP-G15

SIGN DETAIL
1:40

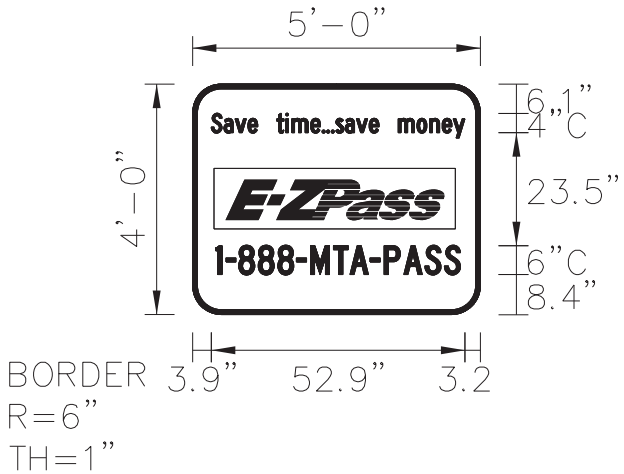

Panel Style: E-ZPass.ssi
M.U.T.C.D.: 2009 Edition

SIGN NUMBER	SP-8
WIDTH x HGHT.	5'-0" x 4'-0"
BORDER WIDTH	1"
CORNER RADIUS	0"
MOUNTING	Overhead
BACKGROUND	TYPE: Reflective
	COLOR: Purple
LEGEND/BORDER	TYPE: Reflective
	COLOR: White/White

SYMBOL	ROT	X	Y	WID	HT

Panel Style: E-ZPass.ssi
Dimensions are in inches.tenths

Letter locations are panel edge to lower left corner

LETTER POSITIONS (X)

																					LENGTH	SERIES/SIZE
S	a	v	e		t	i	m	e	.	.	.	s	a	v	e		m	o	n	e	y	C 2000
3.9	6.5	8.9	11.5	13.6	17.6	19.4	20.7	24.6	27	27.9	28.9	29.9	31.8	34.1	36.8	38.9	42.9	46.8	49.4	52.9	54.3 52	4/3
1	_	8	8	S	_	M	T	A	_	P	A	S	S								C 2000	
4.9	7	9.6	13.7	17.8	21.7	24.6	29.4	32.8	37	40	44	48.4	25.5							51	6	

AP-G16

SIGN DETAIL
1:40

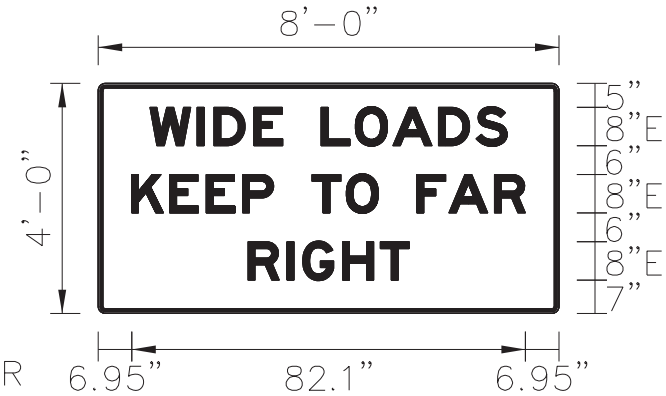

BORDER
R=1.13"
TH=0.63"
IN=0.38"

Panel Style: regulatory.ssi
M.U.T.C.D.: 2009 Edition

SIGN NUMBER	SP-9
WIDTH x HGHT.	8'-0" x 4'-0"
BORDER WIDTH	0.63"
CORNER RADIUS	0"
MOUNTING	Overhead
BACKGROUND	TYPE: Reflective
	COLOR: White
LEGEND/BORDER	TYPE: Reflective
	COLOR: Black/Black

SYMBOL	ROT	X	Y	WID	HT

Panel Style: regulatory.ssi
Dimensions are in inches.tenths

Letter locations are panel edge to lower left corner

LETTER POSITIONS (X)																				LENGTH	SERIES/SIZE
W	I	D	E		L	O	A	D	S												E 2000
10.8	20.6	24.1	32.4	38.4	46.4	53.6	61.4	70.9	78.8											74.5	8
K	E	E	P		T	O		F	A	R											E 2000
7	14.9	22.5	30.1	36.6	44.6	51.7	58.4	66.4	73	82.6										82.1	8
R	I	G	H	T																	E 2000
31.2	39.3	42.6	50.9	58.8																33.5	8

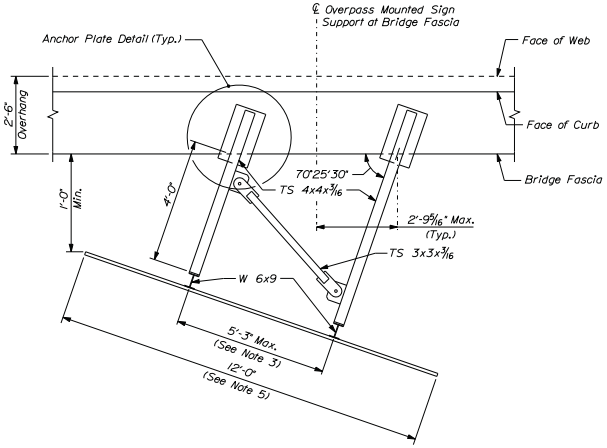

OVERPASS MOUNTED SIGN SUPPORT PLAN - SMALL SIGN PANEL
(Bottom chord lateral bracing not shown for clarity)
Not to Scale

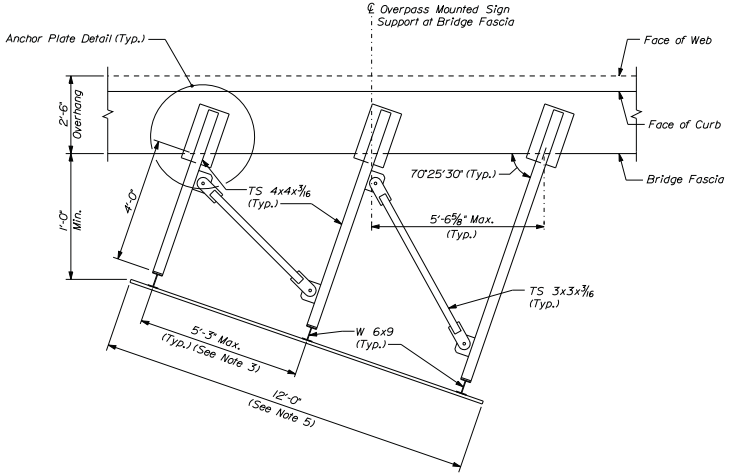

OVERPASS MOUNTED SIGN SUPPORT PLAN - MEDIUM SIGN PANEL
(Bottom chord lateral bracing not shown for clarity)
Not to Scale

NOTES

1. See applicable MaineDOT Standard Details 645(10) - 645(23) for additional details not shown on this sheet.
2. Install 1/2" ϕ high strength galvanized expansion bolt 8" long (1 1/2" above top of concrete) with standard galvanized nut and washer in drilled hole. Fill Hole with high strength non-shrink grout after the expansion bolt is anchored.
3. The spacing of the lateral bracing shall be adjusted as necessary to avoid conflicts with bridge rail posts, and as directed by the Resident.
4. See Bridge Rail Details sheet for location of Overpass Mounted Sign Supports.
5. The signs and W 6x9 sign supports will be installed in a future contract.

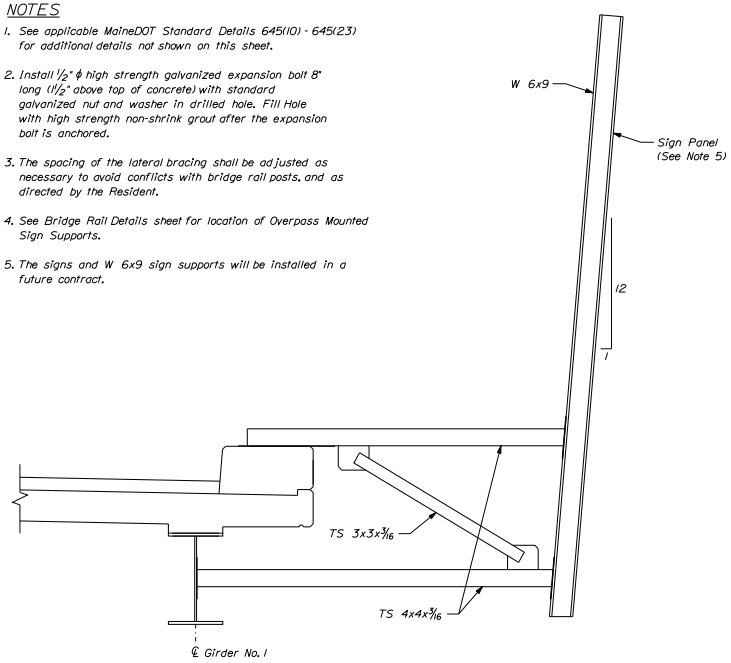

OVERPASS MOUNTED SIGN SUPPORT SECTION
(Small sign panel shown, medium sign panel similar)
Not to Scale

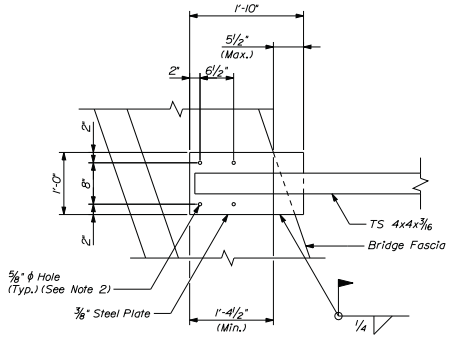

ANCHOR PLATE DETAIL
Not to Scale

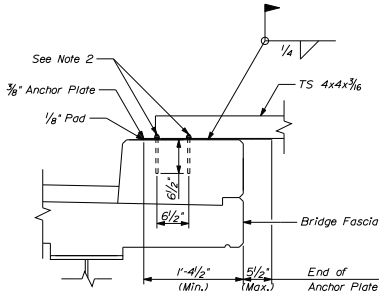

ANCHOR PLATE SECTION
Not to Scale

Scale: AS NOTED

No.	Revision	By	Date

Designed by:

Vanasse Hangen Brustlin, Inc.

CONSULTANT PROJECT MANAGER: T. Bryant

	By	Date		By	Date
Designed	GME	12/14	Checked	LSC	12/14
Drawn	CMD	12/14	In Charge of	TSB	12/14

VANASSE HANGEN BRUSTLIN, INC.
500 Southborough Dr.
Suite 105B
South Portland, ME 04106
TEL (207) 889-3150
FAX (207) 253-5596

MAINE TURNPIKE

THE GOLD STAR MEMORIAL HIGHWAY

MTA PROJECT MANAGER: Ralph Norwood

SUPERSTRUCTURE REPLACEMENT
LUNT'S HILL ROAD UNDERPASS

SIGN SUPPORT STRUCTURE DETAILS

VHB: 55041.00 SHEET NUMBER: 62
CONTRACT: 2015.10 62 OF 76

Date: 12/12/2014

Filename: ...\st\planset\062_signsup_01.dgn

APPENDIX H

SUSPENDED CEILING TIE WIRE REPLACEMENT DETAILS

Ceiling repair procedure to be used

To minimize future corrosion, and to restore the structural integrity of the ceiling system, HNTB recommends retrofitting the existing connections using a detail similar to the 1990 plan details. A 12 Ga. PVC coated, ASTM A641 galvanized core tie wire should be installed through the existing holes in the carrier beams and closed over the stabilizer channel. The tie wire shall be closed by a minimum of four complete 360° twists and should connect into areas where the surrounding material is intact and free from corrosion within 1" of the proposed location. New holes should be drilled if existing holes are found to be unacceptable due to corrosion or damage. All tie wire should have a tensile strength range of 55 – 65 ksi. A sketch of the recommended connection retrofit is provided in Figure 2. In this configuration the plastic coating will insulate the two dissimilar metals from each other and the galvanized coating will prevent rusting of the tie wire.

HNTB's recommends retrofitting approximately 334 connections. At each plaza every connection on the carrier beams located adjacent to the trolley beams should be retrofitted. Retrofits should be provided on every other connection on the second and third rows of carrier beams from the trolley beam. Every third connection on the remaining rows of carrier beams should be made. The retrofits should be made regardless of whether the connection has been previously repaired. Existing tie wire connections should be removed following the installation of the proposed retrofit to allow reinstallation of the ceiling panels.

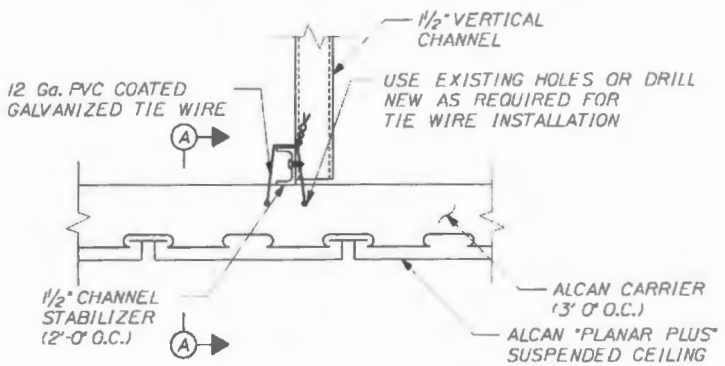

PARTIAL ELEVATION

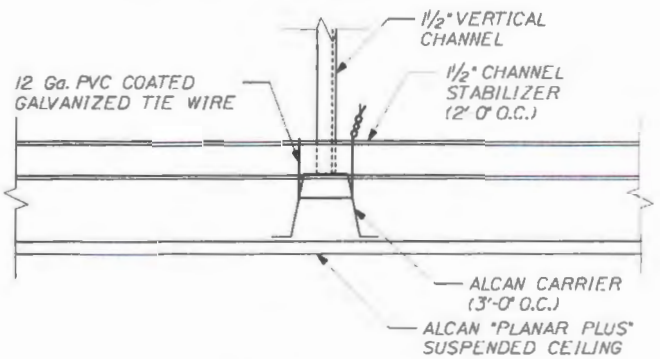

SECTION A-A

APPENDIX I

REBAR SCHEDULE FOR PAVEMENT SLABS

REBAR SCHEDULE FOR PAVEMENT SLABS

MARK	SIZE	NO.	LENGTH	TYPE				LOCATION AND REMARKS
					A	B	C	
A500	5	10	18'-6"	STR				STEEL TRANSVERSE LANES 2/7
A501	5	2	17'-0"	STR				STEEL TRANSVERSE LANES 2/7
A502	5	2	16'-3"	STR				STEEL TRANSVERSE LANES 2/7
A503	5	2	15'-9"	STR				STEEL TRANSVERSE LANES 2/7
A504	5	2	15'-3"	STR				STEEL TRANSVERSE LANES 2/7
A505	5	2	14'-9"	STR				STEEL TRANSVERSE LANES 2/7
A506	5	2	14'-4"	STR				STEEL TRANSVERSE LANES 2/7
A507	5	2	13'-10"	STR				STEEL TRANSVERSE LANES 2/7
A508	5	2	13'-6"	STR				STEEL TRANSVERSE LANES 2/7
A509	5	4	12'-11"	STR				STEEL TRANSVERSE LANES 2/7
A510	5	4	12'-3"	STR				STEEL TRANSVERSE LANES 2/7
A511	5	4	11'-8"	STR				STEEL TRANSVERSE LANES 2/7
A512	5	4	11'-3"	STR				STEEL TRANSVERSE LANES 2/7
A513	5	4	10'-11"	STR				STEEL TRANSVERSE LANES 2/7
A514	5	4	10'-8"	STR				STEEL TRANSVERSE LANES 2/7
A515	5	18	10'-6"	STR				STEEL TRANSVERSE LANES 2/7
A516	5	10	14'-6"	STR				STEEL TRANSVERSE LANES 1/8
A517	5	2	13'-9"	STR				STEEL TRANSVERSE LANES 1/8
A518	5	2	13'-5"	STR				STEEL TRANSVERSE LANES 1/8
A519	5	2	13'-2"	STR				STEEL TRANSVERSE LANES 1/8
A520	5	2	12'-10"	STR				STEEL TRANSVERSE LANES 1/8
A521	5	2	12'-7"	STR				STEEL TRANSVERSE LANES 1/8
A522	5	2	12'-5"	STR				STEEL TRANSVERSE LANES 1/8
A523	5	2	12'-2"	STR				STEEL TRANSVERSE LANES 1/8
A524	5	4	11'-10"	STR				STEEL TRANSVERSE LANES 1/8
A525	5	4	11'-7"	STR				STEEL TRANSVERSE LANES 1/8
A526	5	4	11'-3"	STR				STEEL TRANSVERSE LANES 1/8
A527	5	4	11'-0"	STR				STEEL TRANSVERSE LANES 1/8
A528	5	6	10'-9"	STR				STEEL TRANSVERSE LANES 1/8
A529	5	6	10'-7"	STR				STEEL TRANSVERSE LANES 1/8
A530	5	16	10'-6"	STR				STEEL TRANSVERSE LANES 1/8
A531	5	4	4'-6"	STR				STEEL LONGITUDINAL LANES 2/7
A532	5	4	5'-8"	STR				STEEL LONGITUDINAL LANES 2/7
A533	5	4	9'-6"	STR				STEEL LONGITUDINAL LANES 2/7
A534	5	4	14'-8"	STR				STEEL LONGITUDINAL LANES 2/7
A535	5	24	33'-0"	STR				STEEL LONGITUDINAL LANES 2/7

A536	5	2	4'-6"	STR				STEEL LONGITUDINAL LANES 1/8
A537	5	2	5'-8"	STR				STEEL LONGITUDINAL LANES 1/8
A538	5	2	9'-6"	STR				STEEL LONGITUDINAL LANES 1/8
A539	5	2	14'-8"	STR				STEEL LONGITUDINAL LANES 1/8
A540	5	24	33'-0"	STR				STEEL LONGITUDINAL LANES 1/8
A541	5	222	3'-2"	129	1'-0"	1'-1"		STEEL U-BAR EMBEDDED IN STRUCTURAL SLAB
A600	6	152	10'-6"	STR				GFRP TRANSVERSE LANES 2/7
A601	6	8	10'-8"	STR				GFRP TRANSVERSE LANES 2/7
A602	6	8	10-10"	STR				GFRP TRANSVERSE LANES 2/7
A603	6	8	11'-2"	STR				GFRP TRANSVERSE LANES 2/7
A604	6	4	11'-6"	STR				GFRP TRANSVERSE LANES 2/7
A605	6	4	11'-9"	STR				GFRP TRANSVERSE LANES 2/7
A606	6	4	12'-0"	STR				GFRP TRANSVERSE LANES 2/7
A607	6	4	12'-3"	STR				GFRP TRANSVERSE LANES 2/7
A608	6	4	12'-7"	STR				GFRP TRANSVERSE LANES 2/7
A609	6	4	13'-0"	STR				GFRP TRANSVERSE LANES 2/7
A610	6	4	13'-4"	STR				GFRP TRANSVERSE LANES 2/7
A611	6	4	13'-9	STR				GFRP TRANSVERSE LANES 2/7
A612	6	18	14'-6"	STR				GFRP TRANSVERSE LANES 2/7
A613	6	226	10'-6"	STR				GFRP TRANSVERSE LANES 1/8
A614	6	2	4'-6"	STR				GFRP LONGITUDINAL LANES 2/7
A615	6	2	4'-9"	STR				GFRP LONGITUDINAL LANES 2/7
A616	6	2	5'-6"	STR				GFRP LONGITUDINAL LANES 2/7
A617	6	2	6'-9"	STR				GFRP LONGITUDINAL LANES 2/7
A618	6	2	8'-3"	STR				GFRP LONGITUDINAL LANES 2/7
A619	6	2	9'-10"	STR				GFRP LONGITUDINAL LANES 2/7
A620	6	2	11'-10"	STR				GFRP LONGITUDINAL LANES 2/7
A621	6	2	14'-5"	STR				GFRP LONGITUDINAL LANES 2/7
A622	6	44	56' -0"	STR				GFRP LONGITUDINAL LANES 2/7
A623	6	44	56'-0"	STR				GFRP LONGITUDINAL LANES 1/8
A624	5	354	3'-2"	129	1'-0"	1'-1"		GFRP U-BAR EMBEDDED IN STRUCTURAL SLAB

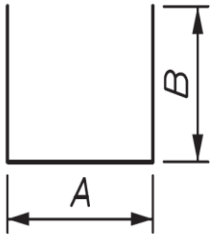

TYPE 129