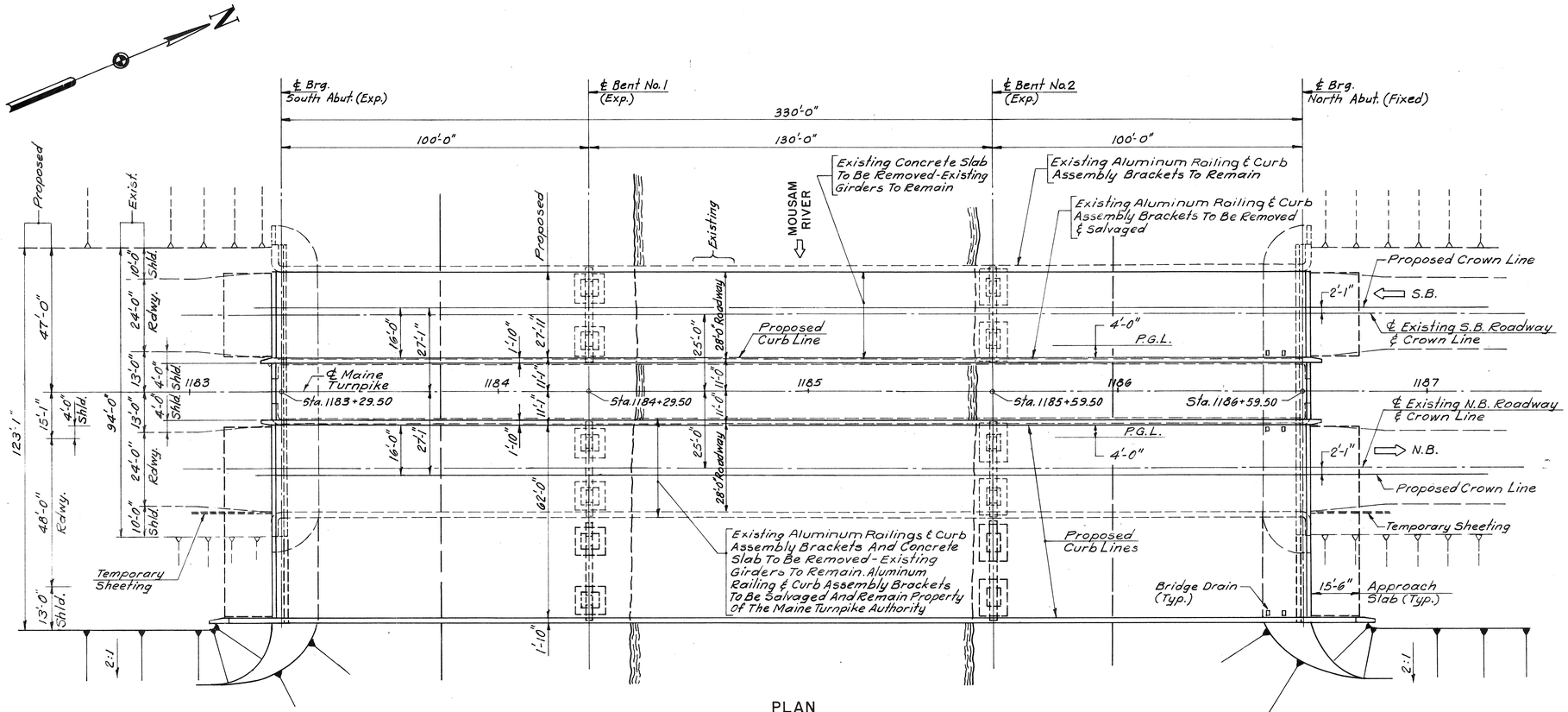

PLAN
1" = 20'

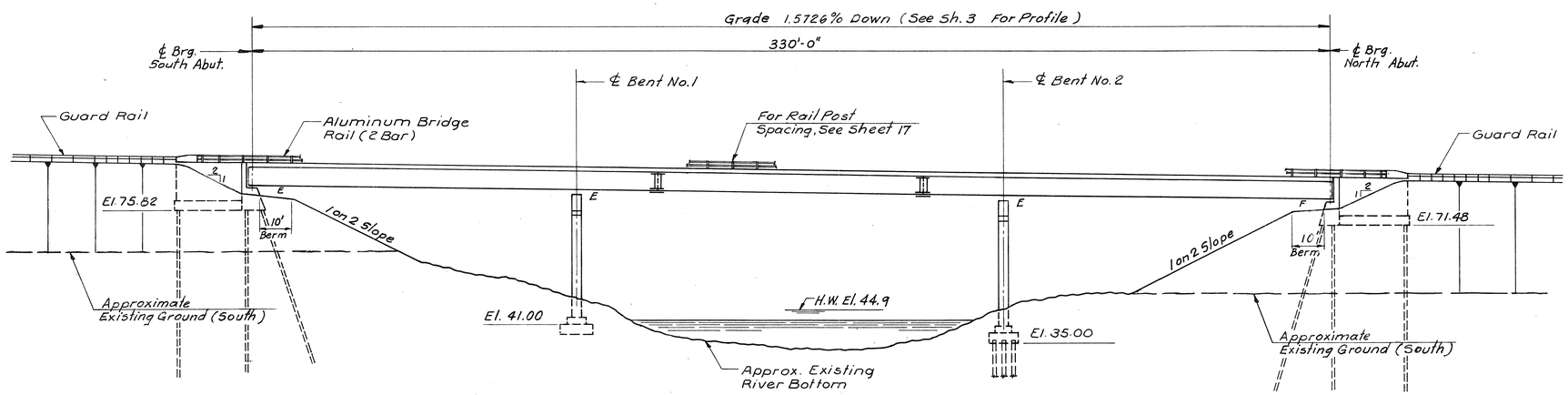

ELEVATION
1" = 20'

INDEX OF SHEETS

1. General Plan & Elevation
2. Typical Cross Sections
3. & 3A Boring Details
4. Payment Limits
5. Footing Plan
6. North Abutment I
7. North Abutment II
8. South Abutment I
9. South Abutment II
10. Wingwalls, End Posts & Approach Slab Details
11. Bent No. 1
12. Bent No. 2
13. Framing Plan & Details
14. Structural Steel Details I
15. Structural Steel Details II
16. Structural Steel Details III & Blocking Points
17. Superstructure Details I (North Bound)
18. Superstructure Details II (South Bound)
19. Miscellaneous Details
20. Reinforcing Steel Schedule
21. Reinforcing Steel Schedule
22. Substructure And Bridge Shoe Repair

STANDARD SHEETS

Bearing Pedestals	BD100-86
Diaphragm & Crossframes	BD113-85
Aluminum Bridge Railing	BD114-81
Concrete End Post	BD201-88
Expansion Device	BD125-82
Miscellaneous Details	BD126-81, BD127-81
Expansion Device	BD128-82

DESIGN

AASHTO Standard Specifications For Highway Bridges 1983 And Interim Specifications 1984, 1985, 1986 & 1987.

CONTRACT

State of Maine, Department of Transportation Standard Specifications, Highways & Bridges, Revision of July 1988.

DESIGN LOADING

LIVE LOAD

HS 25 500,000 Cycles

MATERIALS

CONCRETE

All Concrete Shall be Class AAA

REINFORCING STEEL

ASTM A615 Grade 60

STRUCTURAL STEEL

All Material ASTM A36
High Strength Bolts-ASTM A325

BASIC ALLOWABLE STRESSES

REINFORCING STEEL

f_s = 24,000 psi

STRUCTURAL STEEL

ASTM A36 f_s = 20,000 psi

CONCRETE

f_c = 1,200 p.s.i. n = 9

NOTE:

Plans Of The Existing Bridge Are Available And Can Be Obtained At The Maine Turnpike Authority, 430 Riverside Street, Portland, Maine. Dimensions And Elevations Of The Existing Bridge Shown On The Plans Have Been Obtained From Available Plans Of The Existing Bridge And Limited Field Investigation And May Not Accurately Reflect Actual Field Conditions. The Contractor Will Be Responsible For Making Field Measurements To Assure Consistency With Proposed Modifications.

NO.	REVISION	BY	DATE

	BY	DATE
DESIGNED:	K.A.C.	6/88
DRAWN:	W.H.D.	7/88
CHECKED:	R.J.R.	9/88
IN CHARGE OF	J.P.W.	

MAINE TURNPIKE AUTHORITY

MAINE TURNPIKE

MOUSAM RIVER BRIDGE RECONSTRUCTION

GENERAL PLAN & ELEVATION

HOWARD, NEEDLES, TAMMEN & BERGENDOFF
ARCHITECTS ENGINEERS PLANNERS
BOSTON

SCALE: AS NOTED
BRIDGE SHEET 1
SHEET NO. 16

BRIDGE QUANTITIES

ITEM NO.	DESCRIPTION	QUANTITY	UNIT
202.12	Removing Existing Structural Concrete	200	C.Y.
202.122	Removing Existing Superstructure Concrete	2100	S.Y.
203.25	Granular Borrow	66	C.Y.
203.26	Gravel Borrow	350	C.Y.
206.082	Structural Earth Excavation - Abutments & Retaining Walls	600	C.Y.
206.10	Structural Earth Excavation - Bents	200	C.Y.
206.11	Structural Rock Excavation - Bents	10	C.Y.
403.08	Hot Bituminous Pavement, Grading C	300	Ton
501.214	Steel H-Beam Piles, 53 Lbs/Ft.	2600	L.F.
501.23	Loading Test	1	Each
502.21	Structural Concrete, Abutments, Retaining Walls & End Posts	259	C.Y.
502.23	Structural Concrete, Bents	168	C.Y.
502.261	Structural Conc. Roadway & Sidewalk Slabs On Steel Bridges (N.B. Deck) 610 C.Y.	1	L.S.
502.262	Structural Conc. Roadway & Sidewalk Slabs On Steel Bridges (S.B. Deck) 280 C.Y.	1	L.S.
502.31	Structural Concrete, Approach Slab (68 C.Y.)	1	L.S.
502.71	Protective Shield	4000	S.Y.
503.12	Reinforcing Steel, Fabricated & Delivered	37,900	Lb.
503.13	Reinforcing Steel, Placing	37,900	Lb.
503.14	Reinforcing Steel, Fabricated & Delivered (Epoxy-Coated)	250,500	Lb.
503.15	Reinforcing Steel, Placing (Epoxy-Coated)	250,500	Lb.
504.70	Structural Steel, Fabricated & Delivered (382,900 Lbs.)	1	L.S.
504.71	Structural Steel, Erection (382,900 Lbs.)	1	L.S.
506.141	Field Painting New Structural Steel (192 Ton)	1	L.S.
506.142	Field Painting Existing Structural Steel (377 Ton)	1	L.S.
507.092	Aluminum Bridge Railing, 2 Bar	1020	L.F.
508.10	Membrane Waterproofing	3390	S.Y.
511.07	Cofferdam	1	L.S.
512.08	French Drains	42	L.F.
514.06	Curing Box For Concrete Cylinders	1	Each
515.20	Protective Coating For Concrete Surfaces	465	S.Y.
520.21	Expansion Devices (95 L.F.)	1	L.S.
522.06	Modular Expansion Devices (95 L.F.)	1	L.S.
609.132	Vertical Bridge Curb - Type 1B (9½" X 5") With Recess	1030	L.F.
502.61	Abutment And Bridge Seat Repair - Section 1	300	S. F.
502.63	Pier Repairs	100	S. F.
524.10	Bridge Bearing Replacement	8	Each

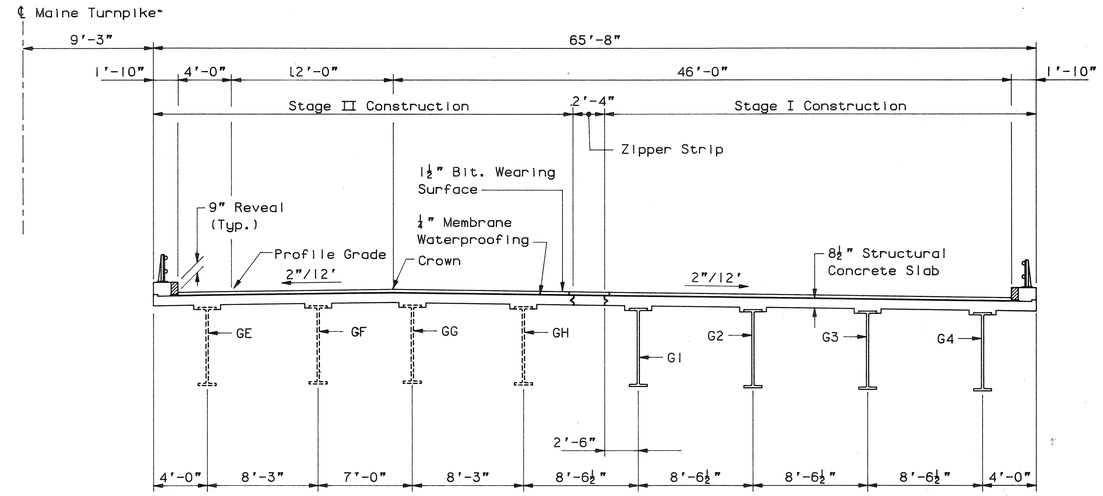

NORTHBOUND

NOTE:

For Stage Construction Notes, See Sh. 15.

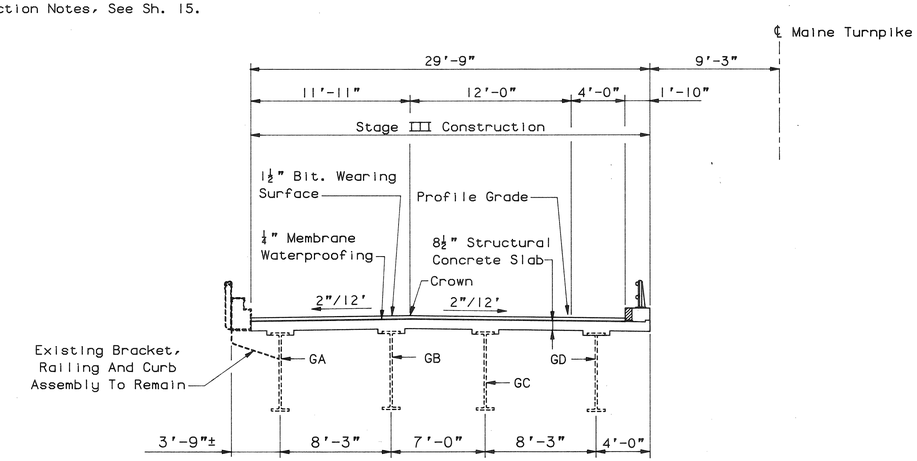

SOUTHBOUND

TYPICAL DECK SECTIONS

3/16" = 1'-0"

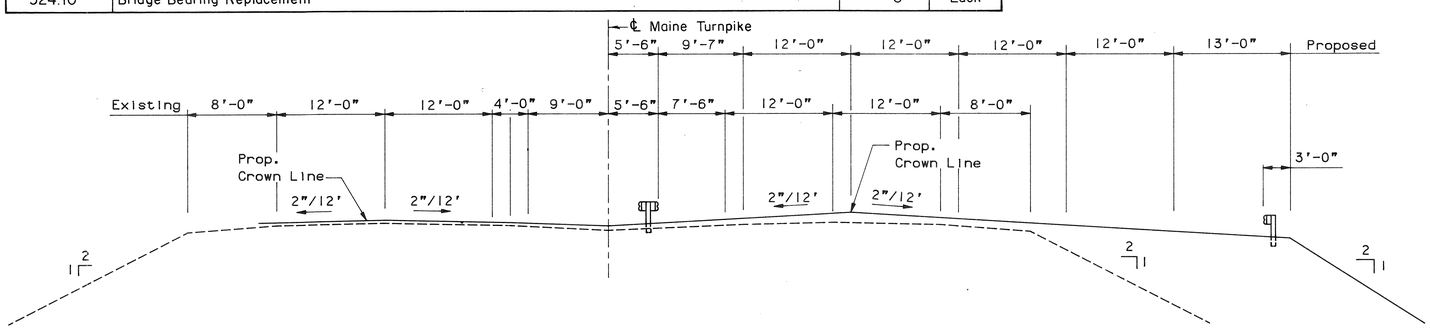

APPROACH SECTION

⅛"=1'-0"

NO.	REVISION	BY	DATE

	BY	DATE
DESIGNED:	KAC	8/88
DRAWN:	PMT	8/88
CHECKED:	RJR	9/88
IN CHARGE OF	JPW	

MAINE TURNPIKE AUTHORITY

MAINE TURNPIKE

MOUSAM RIVER BRIDGE RECONSTRUCTION

TYPICAL CROSS SECTIONS

HOWARD, NEEDLES, TAMMEN & BERGENDOFF
ARCHITECTS ENGINEERS PLANNERS
BOSTON

SCALE AS NOTED
BRIDGE SHEET 2
SHEET NO. 17

MILLER REPROGRAPHICS CO., INC. T34427

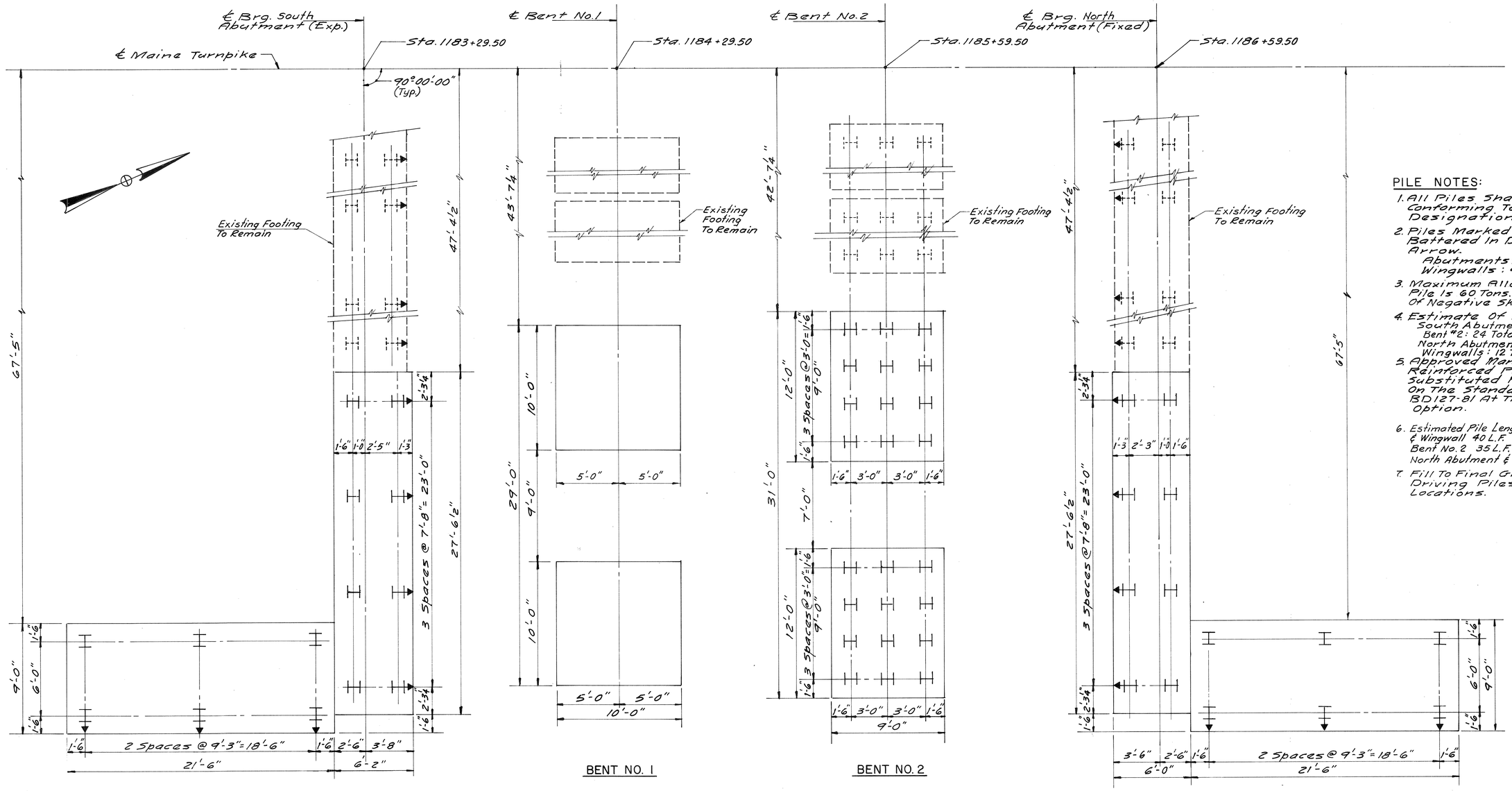

PILE NOTES:

1. All Piles Shall Be HP12×53 Conforming To ASTM Designation A36.
2. Piles Marked Thus ⊢⊣ Shall Be Battered In Direction Of The Arrow.
   Abutments: 4 Inches Per Ft.
   Wingwalls: 4 Inches Per Ft.
3. Maximum Allowable Load Per Pile Is 60 Tons. (Including 10 Tons Of Negative Skin Friction)
4. Estimate Of Piles Required
   South Abutment: 8 Total
   Bent #2: 24 Total
   North Abutment: 8 Total
   Wingwalls: 12 Total
5. Approved Manufactured Reinforced Pile Tips May Be Substituted For Those Shown On The Standard Detail Sheet BD127-81 At The Contractors Option.
6. Estimated Pile Lengths South Abutment & Wingwall 40 L.F.
   Bent No. 2 35 L.F.
   North Abutment & Wingwall 85 L.F.
7. Fill To Final Grade Prior To Driving Piles At Abutment Locations.

NO.	REVISION	BY	DATE		BY	DATE
				DESIGNED:	E.M.T.	7/88
				DRAWN:	C.S.L.	8/88
				CHECKED:	R.J.R.	9/88
				IN CHARGE OF	J.P.W.	

MAINE TURNPIKE AUTHORITY

MAINE TURNPIKE

MOUSAM RIVER BRIDGE RECONSTRUCTION

FOOTING PLAN

HOWARD, NEEDLES, TAMMEN & BERGENDOFF
ARCHITECTS ENGINEERS PLANNERS
BOSTON

SCALE: 1/4" = 1'-0"
BRIDGE SHEET 5
SHEET NO. 21

MILLER REPROGRAPHICS CO., INC. 134427

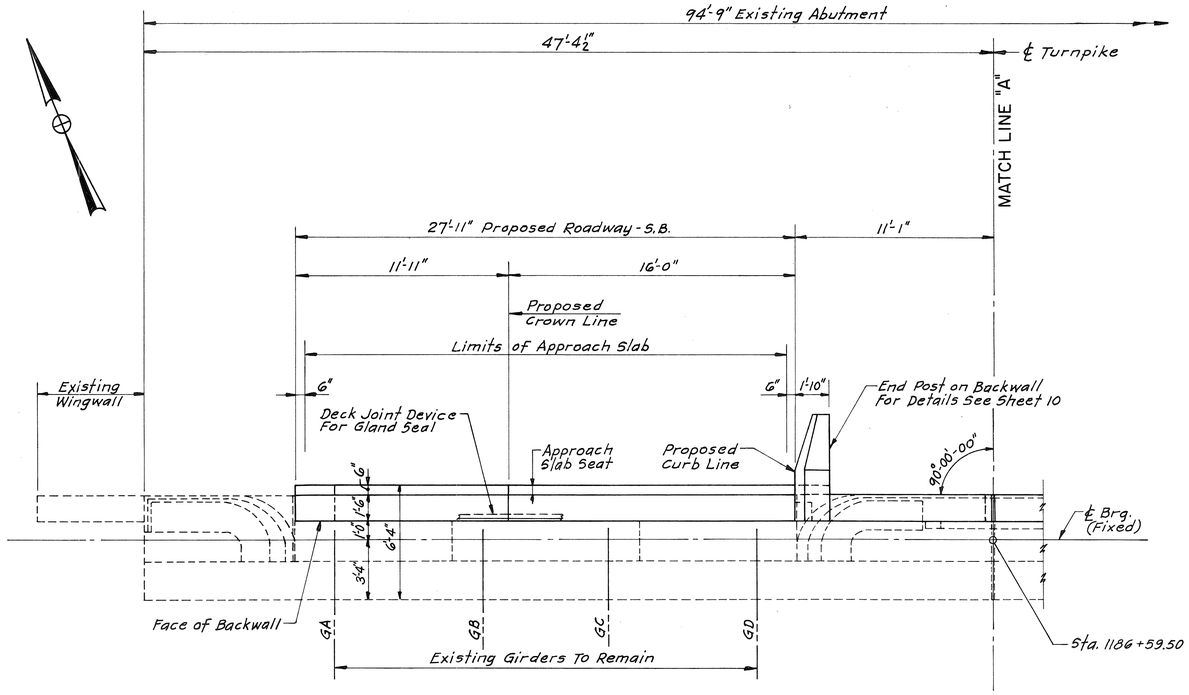

PART PLAN
$\frac{1}{4}$" = 1'-0"

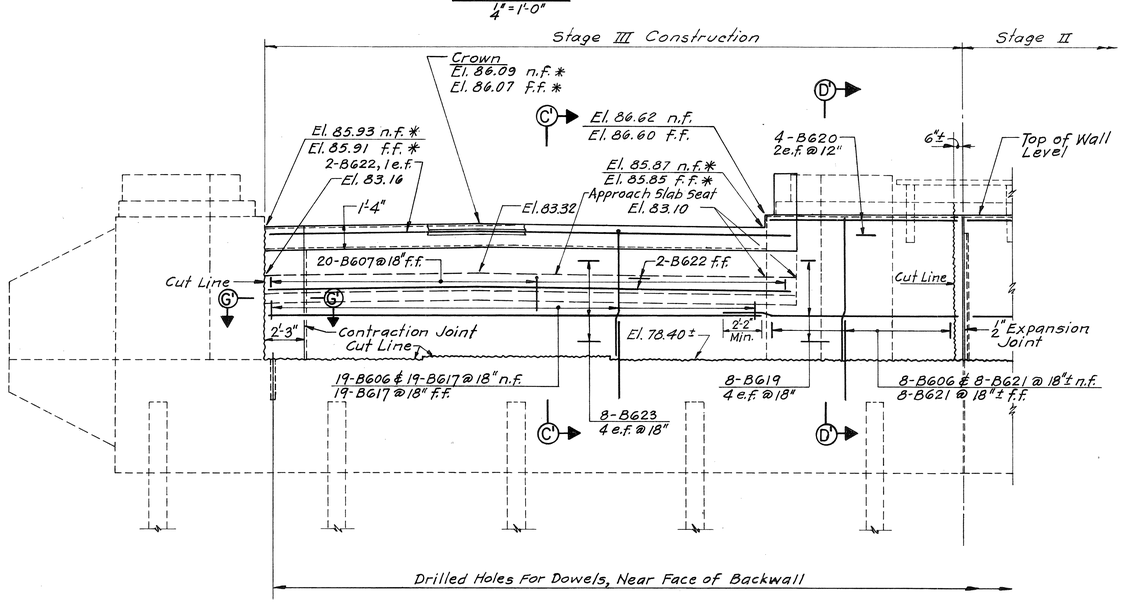

PART ELEVATION
$\frac{1}{4}$" = 1'-0"

* Finished Roadway Elevations

ABUTMENT NOTES:

1. n.f. denotes near face
   f.f. denotes far face
   e.f. denotes each face
2. Top Portion of Abutment Backwalls Shall Not Be Placed Until After Expansion Joint Assembly Is Placed And Adjusted.
3. Reinforcing Steel To Have 2" Minimum Cover Unless Otherwise Noted.
4. For Footing Plans, See Sheet 5.
5. For Details of Construction & Contraction Joint See Sh. BD 126-81.
6. Dress Bearing Pad Areas 1" Larger All Around Than Masonry Plates To Exact Elevations Shown.
7. For Bearing Pedestals And Anchor Bolt Details, See Sheet BD 100-81. Bearing Pedestals Shall Be Placed Normal To Stringers.
8. For Wingwall Elevations See Sheet 10.
9. Chamfer All Exposed Edges Of Concrete ½".
10. Place Reinforcing To Clear Anchor Bolts.
11. Waterstops Are Not Required In Horizontal Construction Joints In Abutment Backwalls.
12. Steps In Bridge Seat To Be Spaced So They Occur Approximately Mid-Way Between Girders.
13. Payment For Drilling Holes And Grouting Dowels And Anchor Bolts To Be Incidental To Item 503.13. All Dowels To Be Grouted With Non-Shrink Grout.
14. Removal Limits Of Existing Concrete That Do Not Fall At An Existing Construction Joint And That Will Be Exposed In The Completed Structure Shall Be Cut Along These Limits With A Masonry Saw To A Minimum Depth Of 1" From The Surface. The Concrete Shall Then Be Removed In A Manner That Will Leave The Saw-Cut Edges Undamaged.
15. Existing Reinforcing Steel That Is Exposed After Removal Of Existing Concrete Shall Not Be Cut, But Shall Be Cleaned And Extended Into New Concrete As Far As Practicable. Payment For Cleaning Shall Be Incidental To Item 202.12.
16. For Vertical Bridge Curb Detail See Sheet 19.
17. Any Existing Reinforcing Steel, Intended For Re-Use In The Proposed Construction, That Is Damaged Or Broken During The Removal At Existing Concrete Shall Be Replaced In Drilled Holes And Secured By Grouting.
18. Cover Horizontal & Vertical Construction & Contraction Joints On The Back With Two Layers Of Heavy Roofing Felt. See Standard Detail Sheet BD 127-81.
19. Protective Coating For Concrete Surfaces Shall Be Applied To The Top Of Abutment Backwalls And 1 Foot Below Top Of Backwall On The Backface.
20. Break Bond At Vertical Contraction Joints By A Method Approved By The Engineer.
21. For Substructure Repair Details, See Sheet 22.

NOTE:
For Section C'-C', D'-D' & G'-G', See Sheet 9.

NO.	REVISION	BY	DATE

	BY	DATE
DESIGNED:	R. J. R.	6/88
DRAWN:	W. H. D.	7/88
CHECKED:	C. F. M.	9/88
IN CHARGE OF	J. P. W.	

MAINE TURNPIKE AUTHORITY
MAINE TURNPIKE

MOUSAM RIVER BRIDGE RECONSTRUCTION
NORTH ABUTMENT I

HOWARD, NEEDLES, TAMMEN & BERGENDOFF
ARCHITECTS ENGINEERS PLANNERS
BOSTON

SCALE: AS NOTED
BRIDGE SHEET 6
SHEET NO. 22

MILLER REPROGRAPHICS CO., INC. 134427

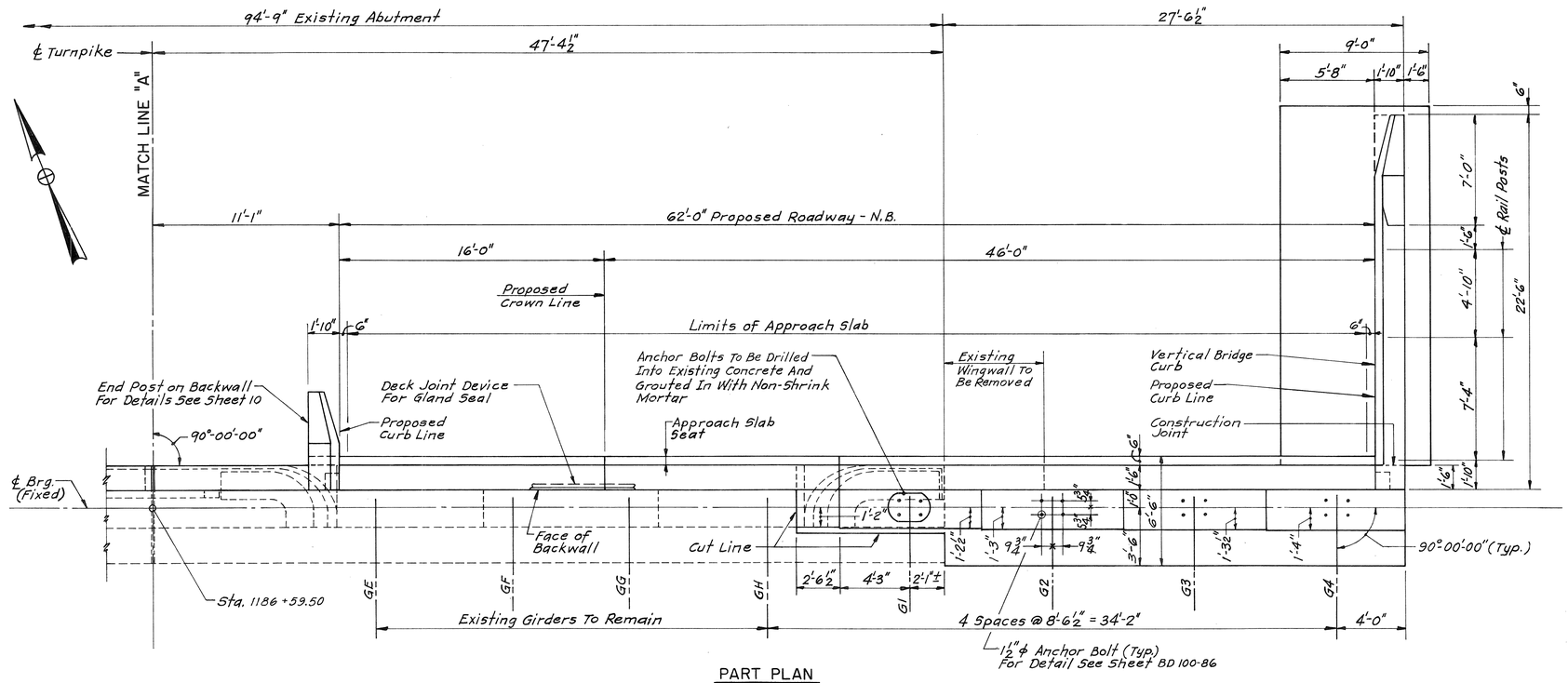

PART PLAN
1/4" = 1'-0"

NOTES:

1. For Abutment Notes, See Sheet 6.
2. For Section A'-A' & B'-B', See Sheet 8.
3. For Section C'-C', E'-E' & F'-F', See Sheet 9.

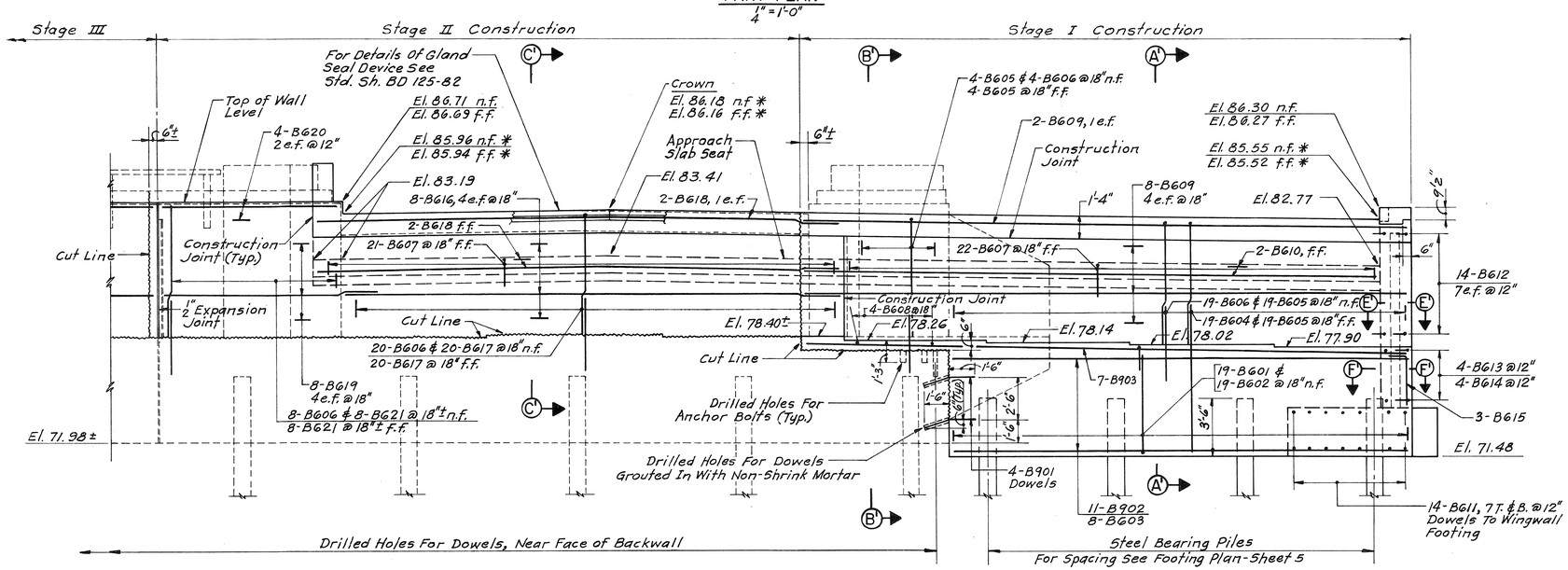

PART ELEVATION
1/4" = 1'-0"

* Finished Roadway Elevations

NO.	REVISION	BY	DATE

	BY	DATE
DESIGNED:	R.J.R.	6/88
DRAWN:	W.H.D.	7/88
CHECKED:	C.F.M.	9/88
IN CHARGE OF	J.P.W.	

MAINE TURNPIKE AUTHORITY
MAINE TURNPIKE

MOUSAM RIVER BRIDGE RECONSTRUCTION
NORTH ABUTMENT II

HOWARD, NEEDLES, TAMMEN & BERGENDOFF
ARCHITECTS ENGINEERS PLANNERS
BOSTON

SCALE: AS NOTED
BRIDGE SHEET 7
SHEET NO. 23

MILLER REPROGRAPHICS CO., INC. 134427

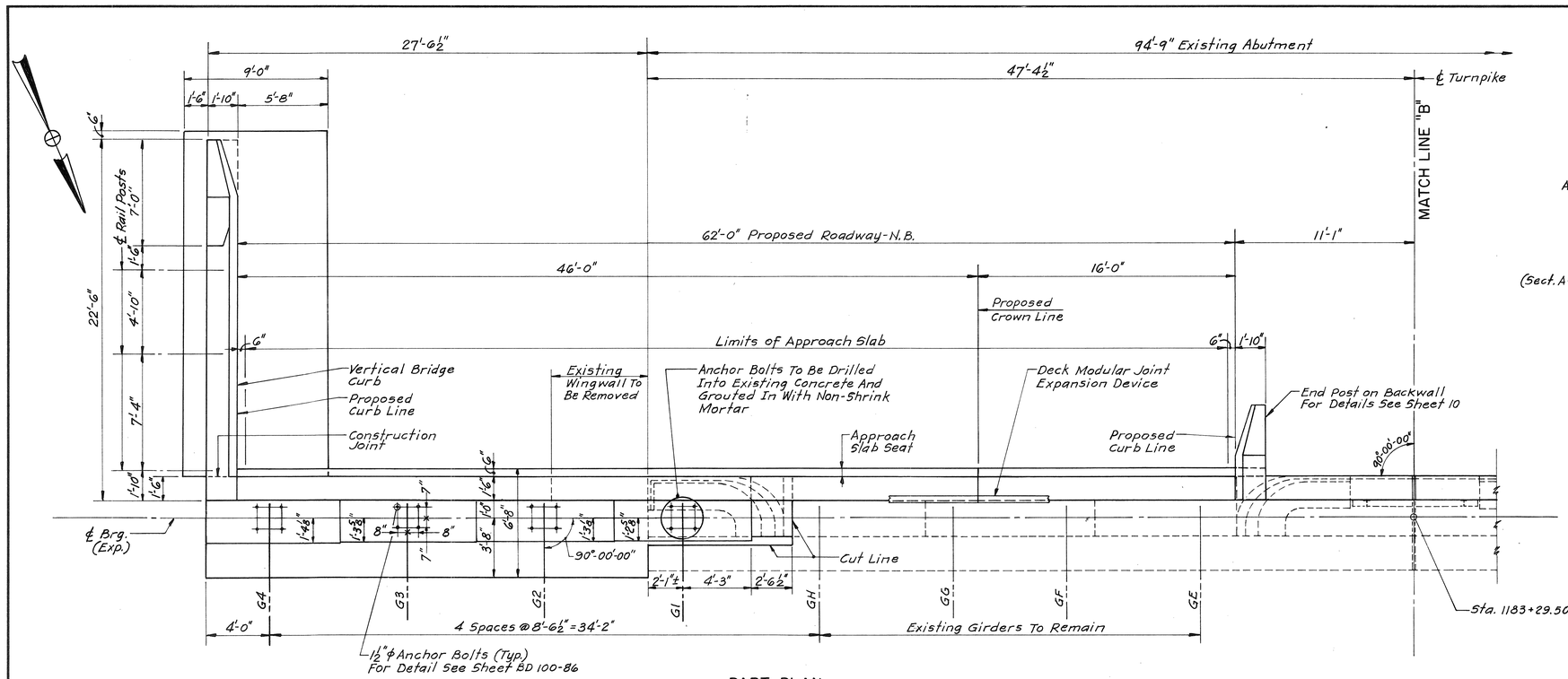

PART PLAN
1/4" = 1'-0"

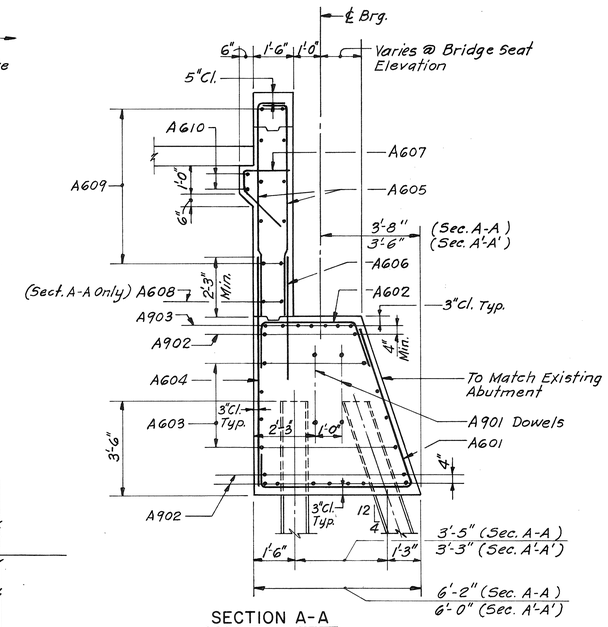

SECTION A-A
SECTION A'-A', SIMILAR
3/8" = 1'-0"

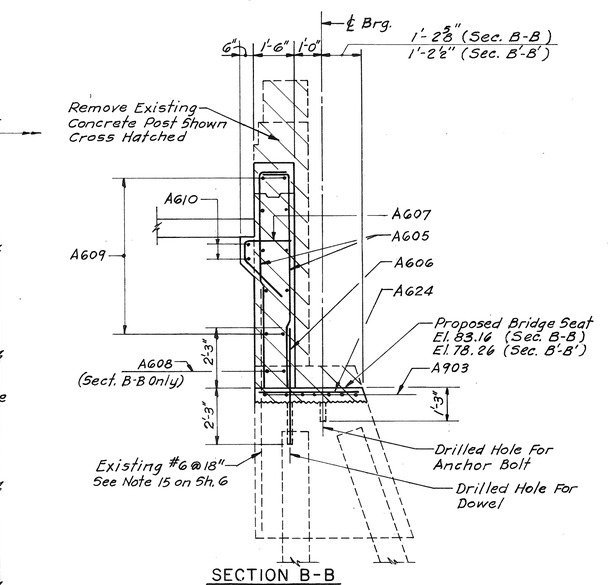

SECTION B-B
SECTION B'-B', SIMILAR
3/8" = 1'-0"

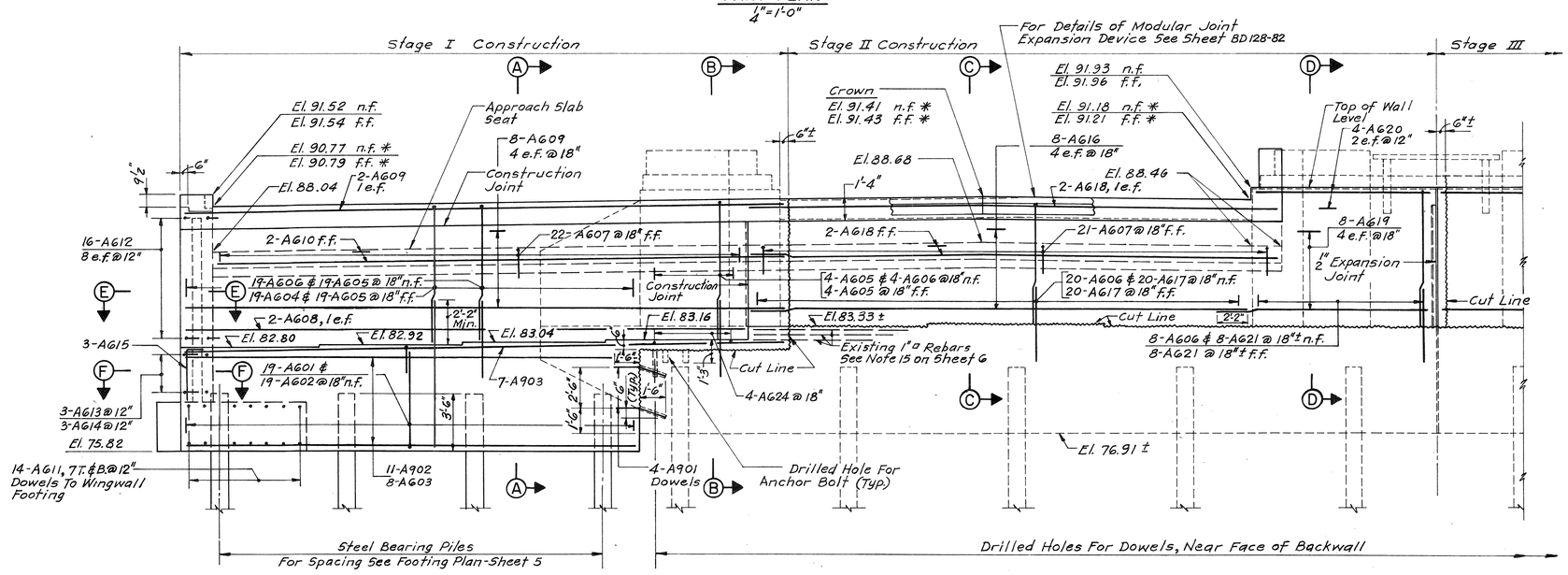

PART ELEVATION
1/4" = 1'-0"

* Finished Roadway Elevations

NOTE:
For Abutment Notes See Sheet 6.

NO.	REVISION	BY	DATE

	BY	DATE
DESIGNED:	R.J.R.	6/88
DRAWN:	W.H.D.	7/88
CHECKED:	C.F.M.	9/88
IN CHARGE OF J.P.W.		

MAINE TURNPIKE AUTHORITY
MAINE TURNPIKE

MOUSAM RIVER BRIDGE RECONSTRUCTION
SOUTH ABUTMENT I

HOWARD, NEEDLES, TAMMEN & BERGENDOFF
ARCHITECTS ENGINEERS PLANNERS
BOSTON

SCALE: AS NOTED
BRIDGE SHEET 8
SHEET NO. 24

MILLER REPROGRAPHICS CO., INC. 134427

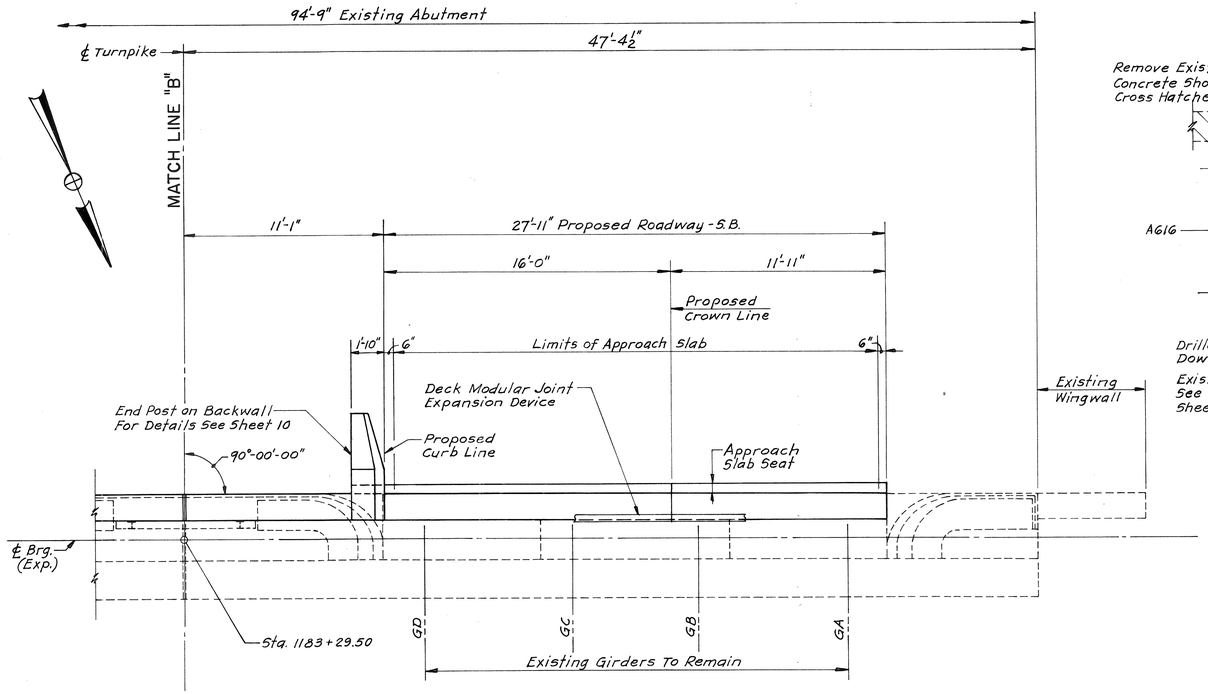

PART PLAN
1/4" = 1'-0"

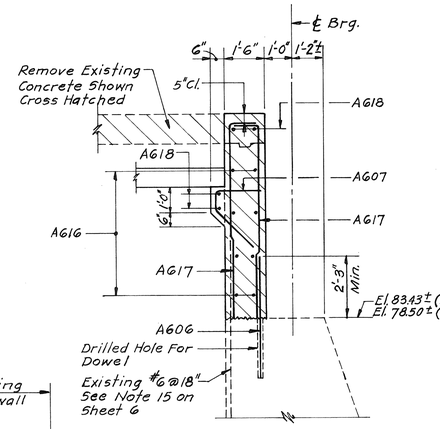

SECTION C-C
SECTION C'-C' SIMILAR
3/8" = 1'-0"

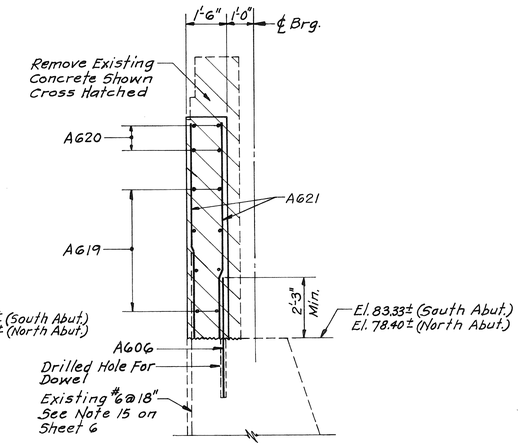

SECTION D-D
SECTION D'-D' SIMILAR
3/8" = 1'-0"

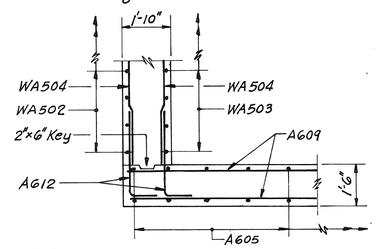

SECTION E-E
SECTION E'-E' SIMILAR, OPPOSITE HAND
3/8" = 1'-0"

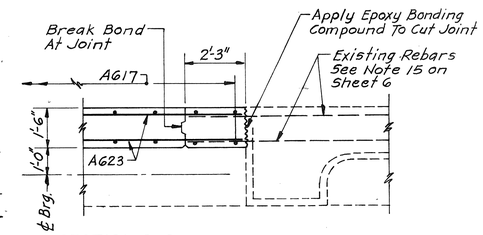

SECTION G-G
SECTION G'-G' SIMILAR, OPPOSITE HAND
3/8" = 1'-0"

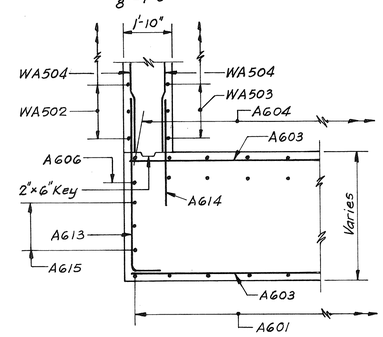

SECTION F-F
SECTION F'-F' SIMILAR, OPPOSITE HAND
3/8" = 1'-0"

NOTE:
Reinforcing Steel For Sections A'-A' Through G'-G' Same As Shown For Sections A-A Through G-G Except As Noted. Bar Mark Designation B Is Utilized For The East Abutment With Wingwall. See Abutment And Wingwall Elevations For Bar Mark Designations.

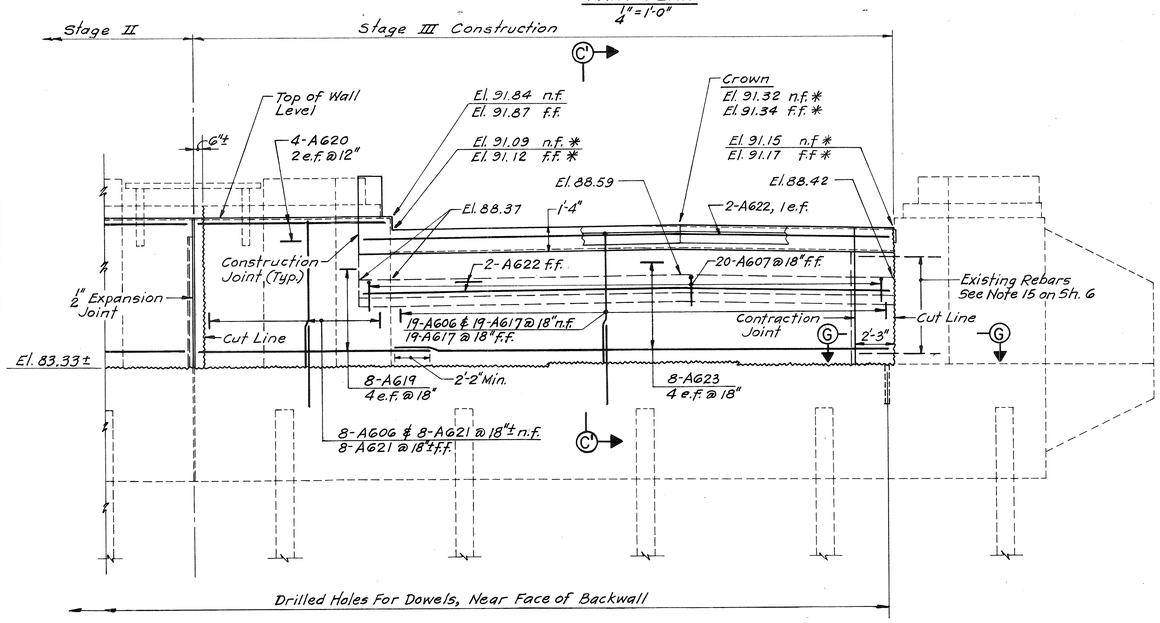

PART ELEVATION
1/4" = 1'-0"

* Finished Roadway Elevations

NO.	REVISION	BY	DATE		BY	DATE
				DESIGNED:	R.J.R.	6/88
				DRAWN:	W.H.D.	7/88
				CHECKED:	C.F.M.	9/88
				IN CHARGE OF	J.P.W.	

MAINE TURNPIKE AUTHORITY
MAINE TURNPIKE

MOUSAM RIVER BRIDGE RECONSTRUCTION
SOUTH ABUTMENT II

HOWARD, NEEDLES, TAMMEN & BERGENDOFF
ARCHITECTS ENGINEERS PLANNERS
BOSTON

SCALE: AS NOTED
BRIDGE SHEET 9
SHEET NO. 25

MILLER REPROGRAPHICS CO., INC. 134427

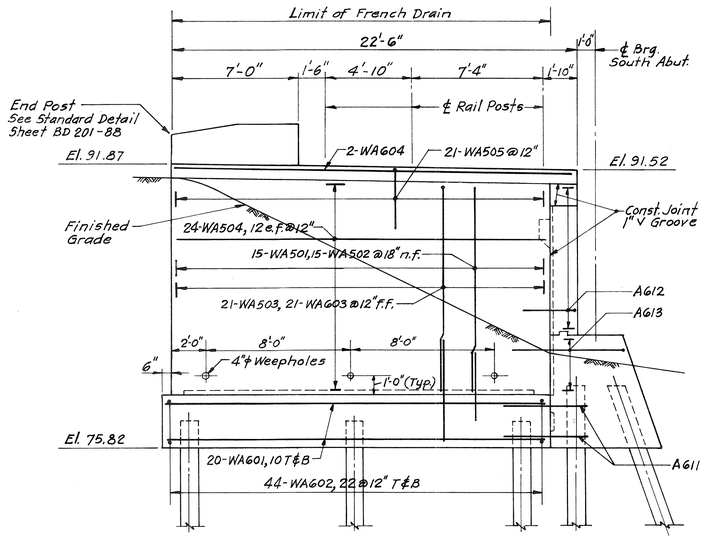

SOUTH WINGWALL ELEVATION
1/4" = 1'-0"

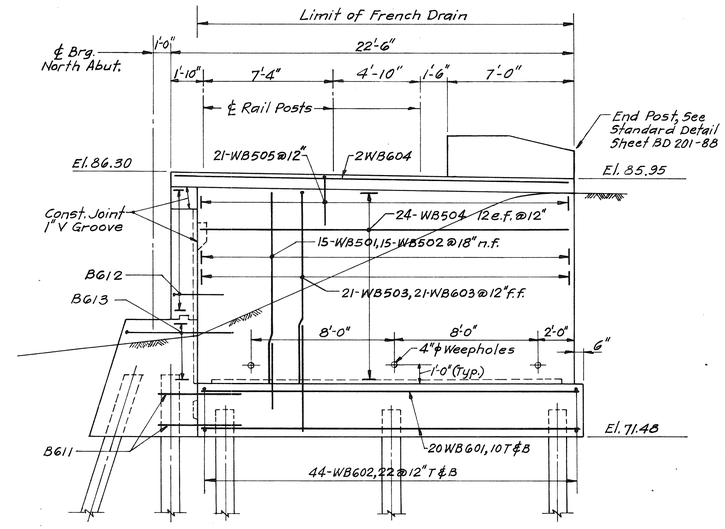

NORTH WINGWALL ELEVATION
1/4" = 1'-0"

WINGWALL DETAILS
Scale As Noted

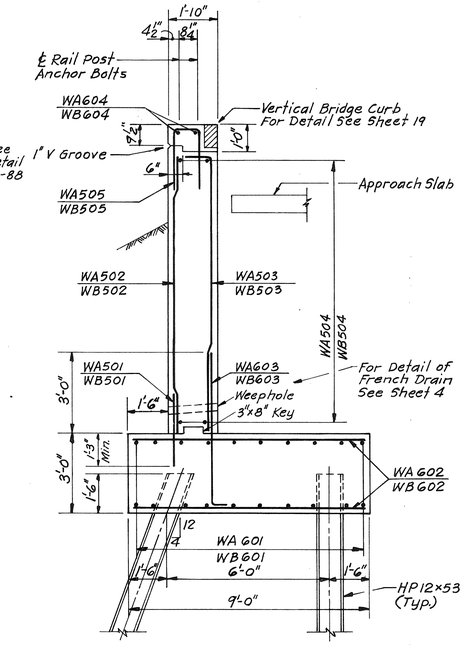

TYPICAL WINGWALL SECTION
3/8" = 1'-0"

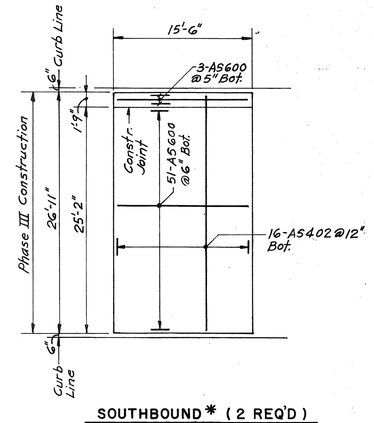

SOUTHBOUND * (2 REQ'D)

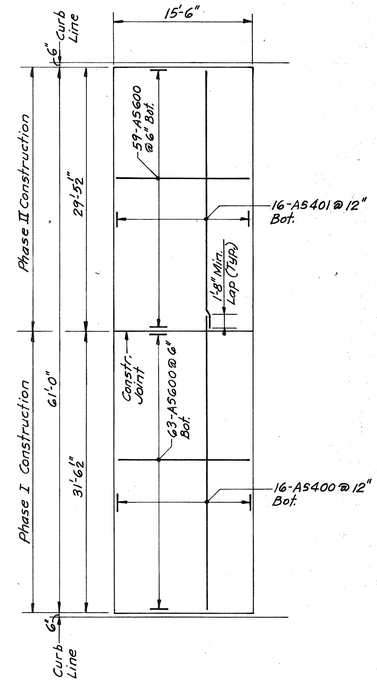

NORTHBOUND * (2 REQ'D)

APPROACH SLABS
1/8" = 1'-0"

* For Location of Drain Tubes And Other Details See Standard Sheet BD 126-81.

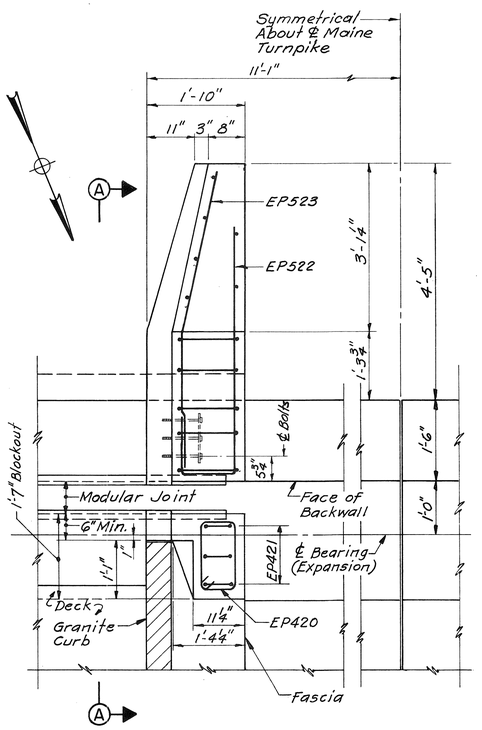

PLAN - MEDIAN (AT SOUTH ABUTMENT)

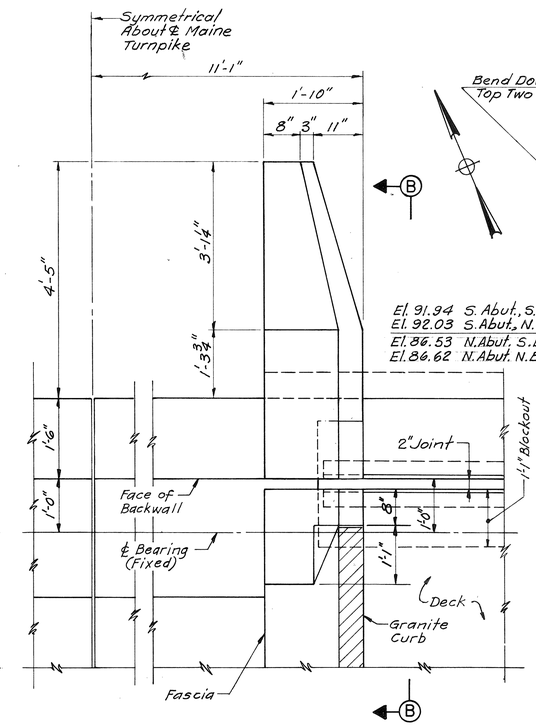

PLAN - MEDIAN (AT NORTH ABUTMENT)

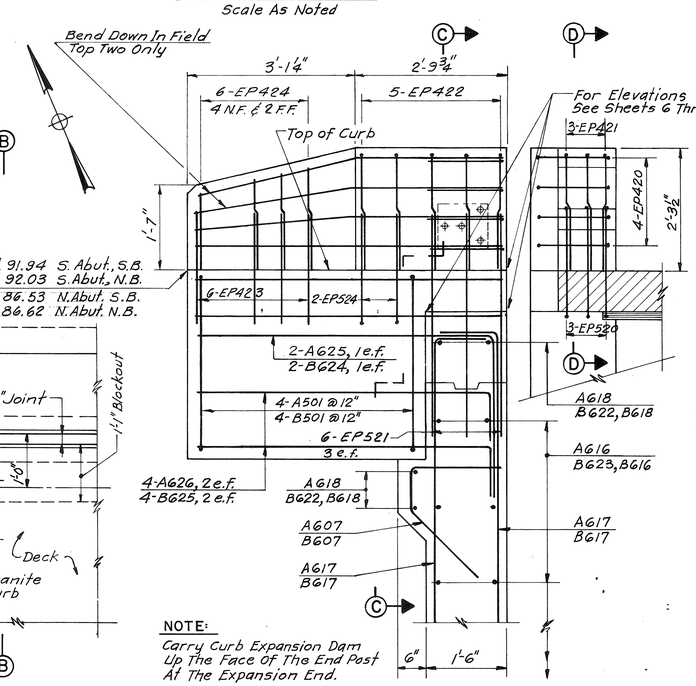

NOTE:
Carry Curb Expansion Dam Up The Face Of The End Post At The Expansion End.

SECTION A-A
SECTION B-B SIMILAR, OPPOSITE HAND

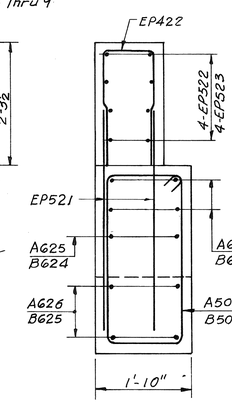

SECTION C-C

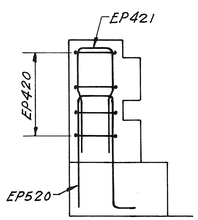

SECTION D-D

NOTE: For Dimensions And Details Not Shown, See Standard Detail Sheet BD 201-88.

MEDIAN END POST DETAILS
3/4" = 1'-0"

NO.	REVISION	BY	DATE

	BY	DATE
DESIGNED:	R.J.R.	6/88
DRAWN:	W.H.D.	7/88
CHECKED:	C.F.M.	9/88
IN CHARGE OF	J.P.W.	

MAINE TURNPIKE AUTHORITY
MAINE TURNPIKE

MOUSAM RIVER BRIDGE RECONSTRUCTION
WINGWALLS, END POSTS & APPROACH SLAB DETAILS

HOWARD, NEEDLES, TAMMEN & BERGENDOFF
ARCHITECTS ENGINEERS PLANNERS
BOSTON

SCALE: AS NOTED
BRIDGE SHEET ID
SHEET NO. 26

MILLER REPROGRAPHICS CO., INC. 134427

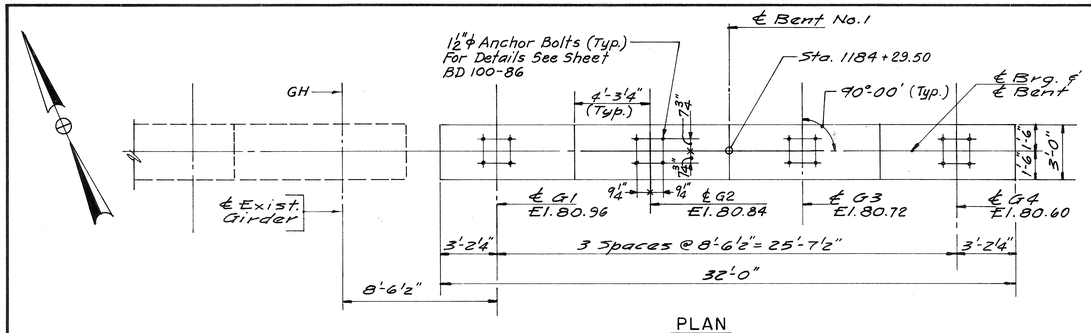

PLAN
¼" = 1'-0"

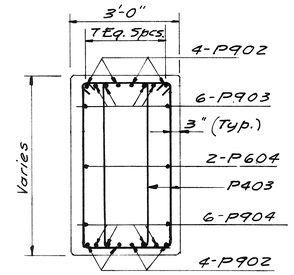

SECTION A-A
½" = 1'-0"

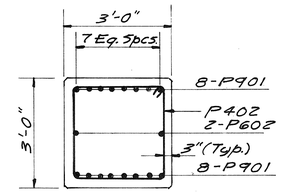

SECTION B-B
½" = 1'-0"

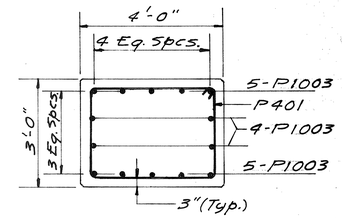

SECTION C-C
½" = 1'-0"

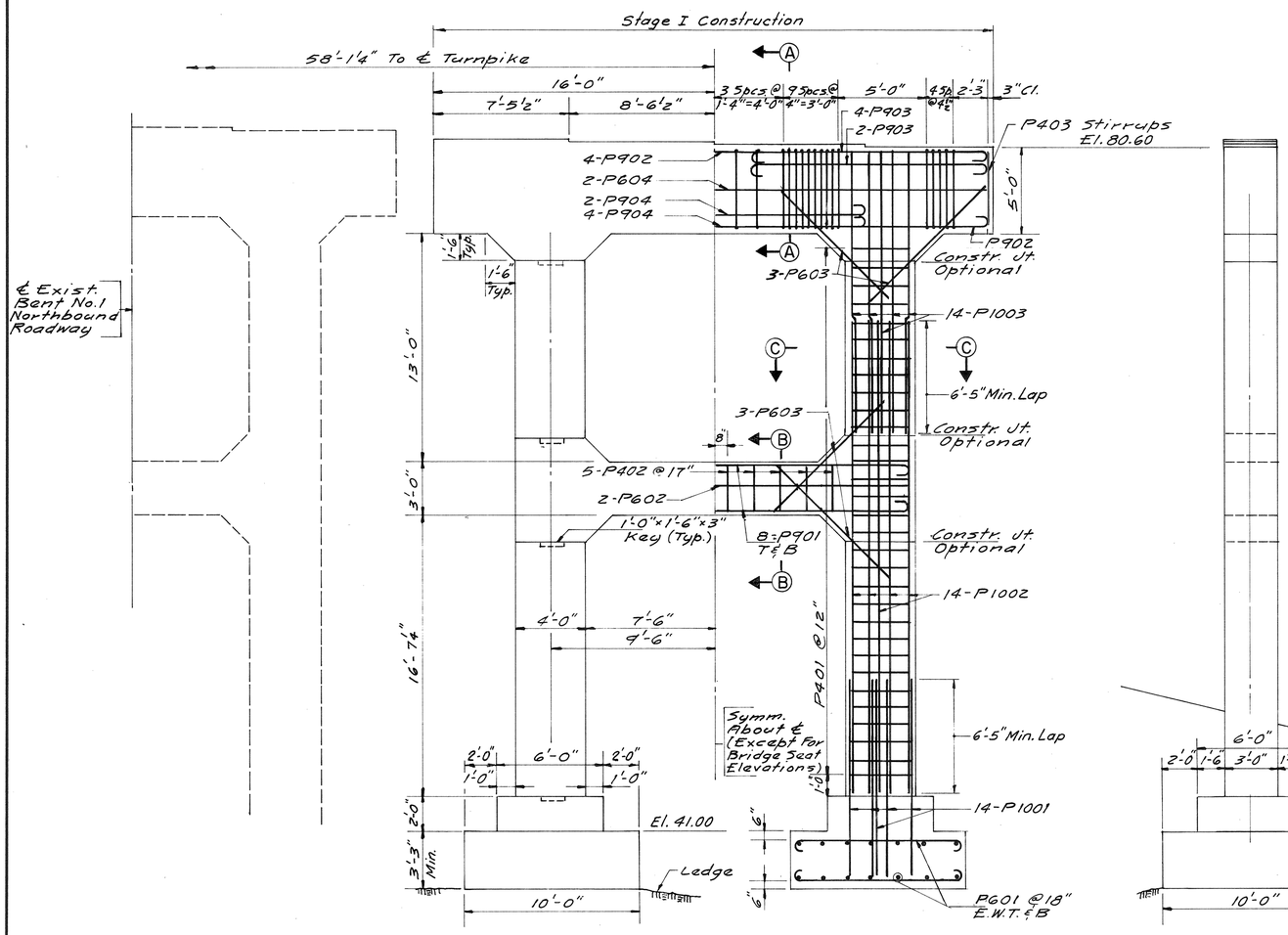

ELEVATION
¼" = 1'-0"

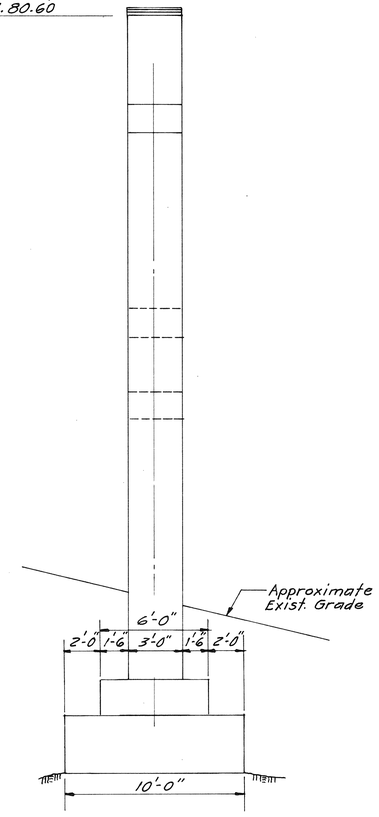

END VIEW
¼" = 1'-0"

NOTES:

1. Chamfer All Exposed Edges ¾".
2. Reinforcing Steel Shall Have 3" Minimum Cover Unless Otherwise Noted.
3. Place Reinforcing Steel On Bridge Seats To Clear Anchor Bolts.
4. Maximum Allowable Footing Pressure = 10 Tons Per Square Foot.

NO.	REVISION	BY	DATE

	BY	DATE
DESIGNED:	C.F.M.	7/88
DRAWN:	C.S.L.	7/88
CHECKED:	E.M.T.	8/88
IN CHARGE OF	J.P.W.	

MAINE TURNPIKE AUTHORITY

MAINE TURNPIKE

MOUSAM RIVER BRIDGE RECONSTRUCTION

BENT NO. 1

HOWARD, NEEDLES, TAMMEN & BERGENDOFF
ARCHITECTS ENGINEERS PLANNERS
BOSTON

SCALE: AS NOTED
BRIDGE SHEET 11
SHEET NO. 27

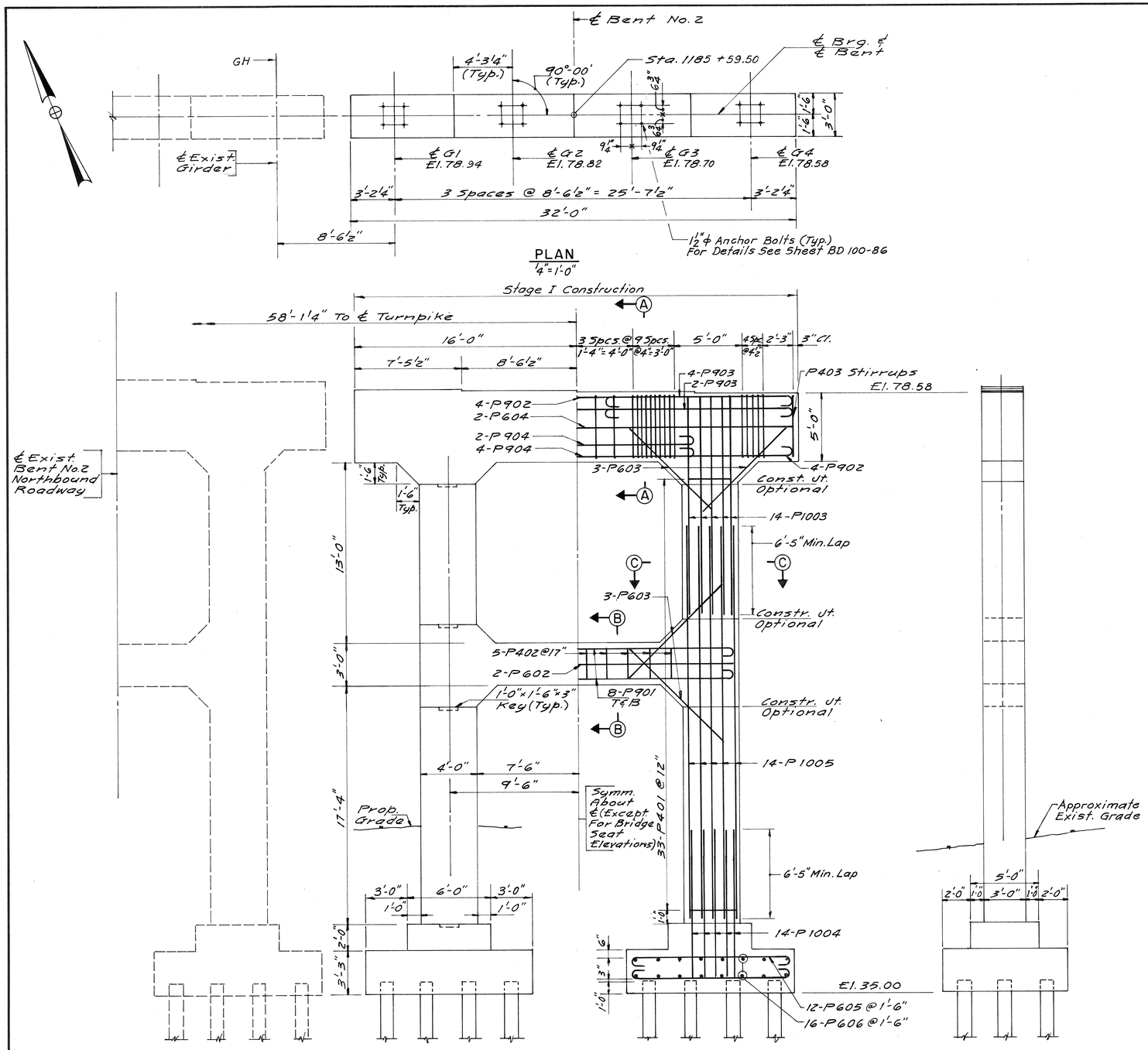

NOTES:

1. For Sections A-A, B-B & C-C See Sheet 11.
2. Chamfer All Exposed Edges ¾".
3. Reinforcing Steel Shall Have 3" Minimum Cover Unless Otherwise Noted.
4. Place Reinforcing Steel On Bridge Seats To Clear Anchor Bolts.

NO.	REVISION	BY	DATE

	BY	DATE
DESIGNED:	C.F.M.	7/88
DRAWN:	C.S.L.	7/88
CHECKED:	E.M.T.	8/88
IN CHARGE OF	J.P.W.	

MAINE TURNPIKE AUTHORITY

MAINE TURNPIKE

MOUSAM RIVER BRIDGE RECONSTRUCTION

BENT NO. 2

HOWARD, NEEDLES, TAMMEN & BERGENDOFF
ARCHITECTS ENGINEERS PLANNERS
BOSTON

SCALE: AS NOTED
BRIDGE SHEET 12

SHEET NO. 28

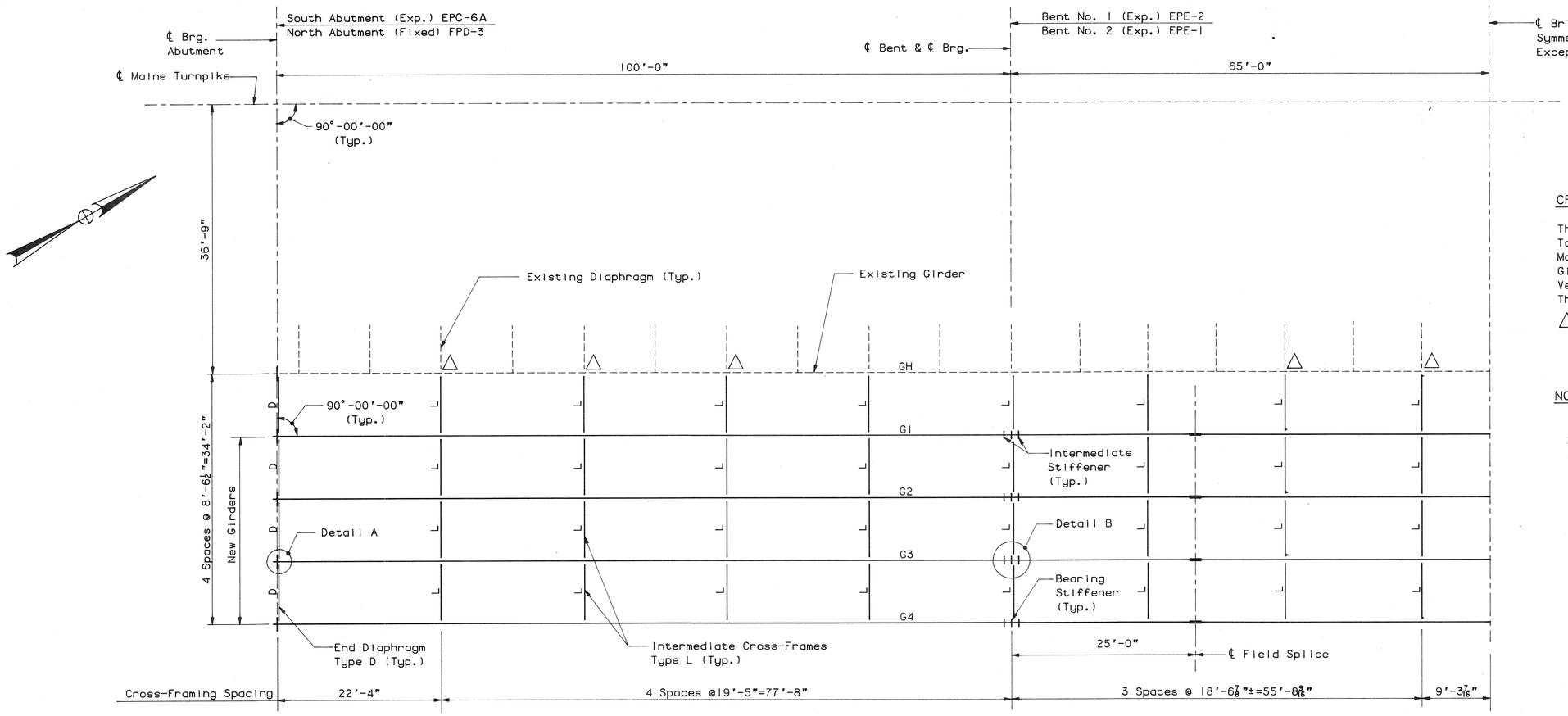

FRAMING PLAN

⅛"=1'-0"

CROSS-FRAME NOTES:

The Intent Of The Cross-Frame Spacing Shown Is To Match That In The Existing Bridge So As To Make Use Of The Connection Angles Of The Existing Girder. Before Fabrication, The Contractor Shall Verify, By Field Measurement, The Actual Location Of The Existing Connection Angles.

△ Knee Brace Required On Existing Diaphragm See Sheet No. 14 For Detail.

NOTES:

1. For Cross-Frame Details, See Sh. 14.
2. For Details A & B, See Sh. 14.
3. For Structural Steel Notes, See Sh. 14.

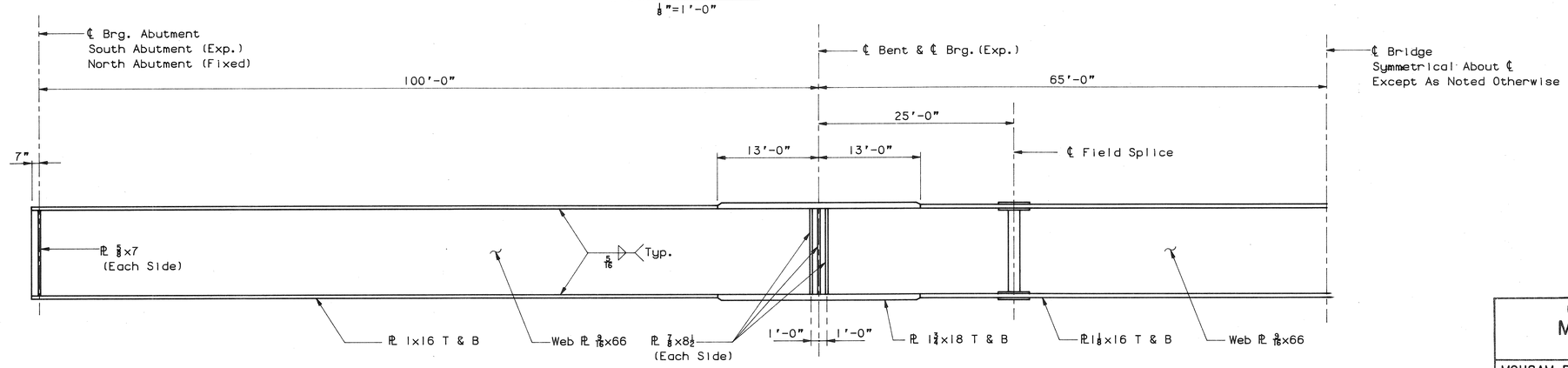

GIRDER ELEVATION

Not To Scale

NO.	REVISION	BY	DATE

	BY	DATE
DESIGNED:	KAC	7/88
DRAWN:	LS	7/88
CHECKED:	EMT	7/88
IN CHARGE OF	JPW	

MAINE TURNPIKE AUTHORITY

MAINE TURNPIKE

MOUSAM RIVER BRIDGE RECONSTRUCTION

FRAMING PLAN & DETAILS

HOWARD, NEEDLES, TAMMEN & BERGENDOFF
ARCHITECTS ENGINEERS PLANNERS
BOSTON

SCALE AS NOTED
BRIDGE SHEET 13
SHEET NO. 29

MILLER REPROGRAPHICS CO., INC. 134427

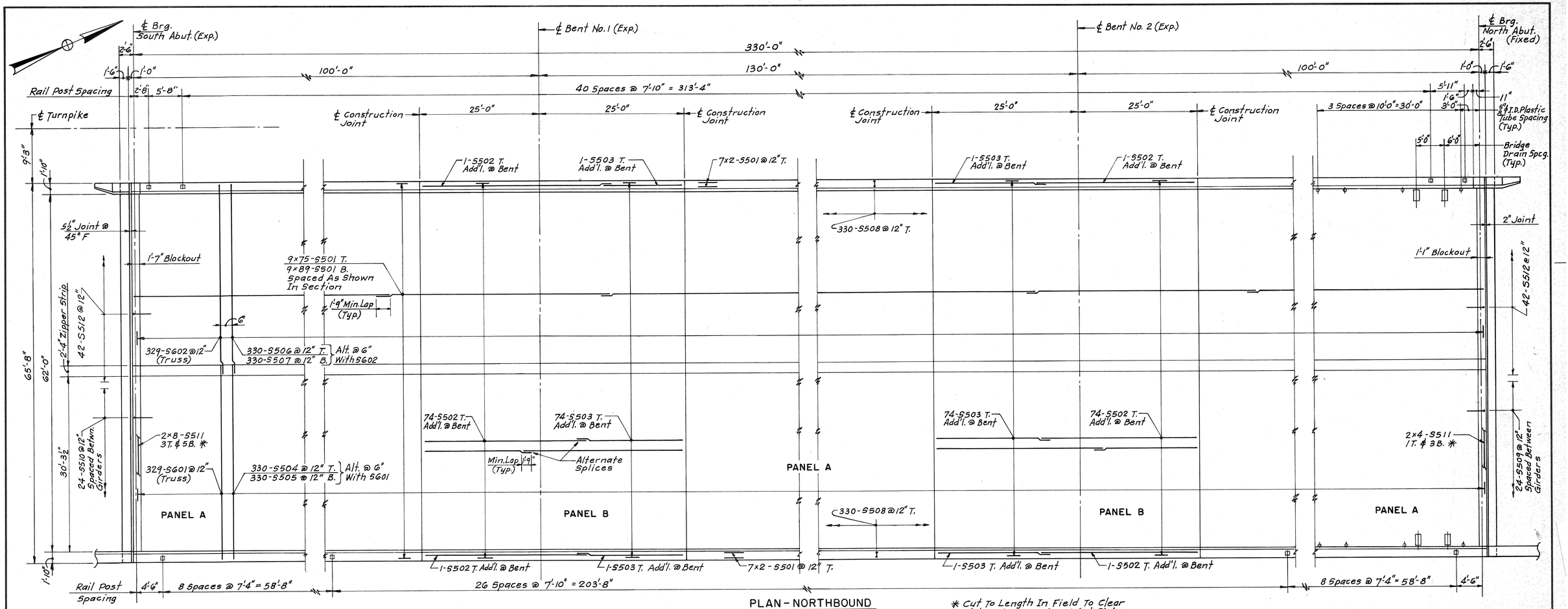

PLAN - NORTHBOUND

3/8" = 1'-0"

* Cut To Length In Field To Clear Web and Expansion Joint Plates.

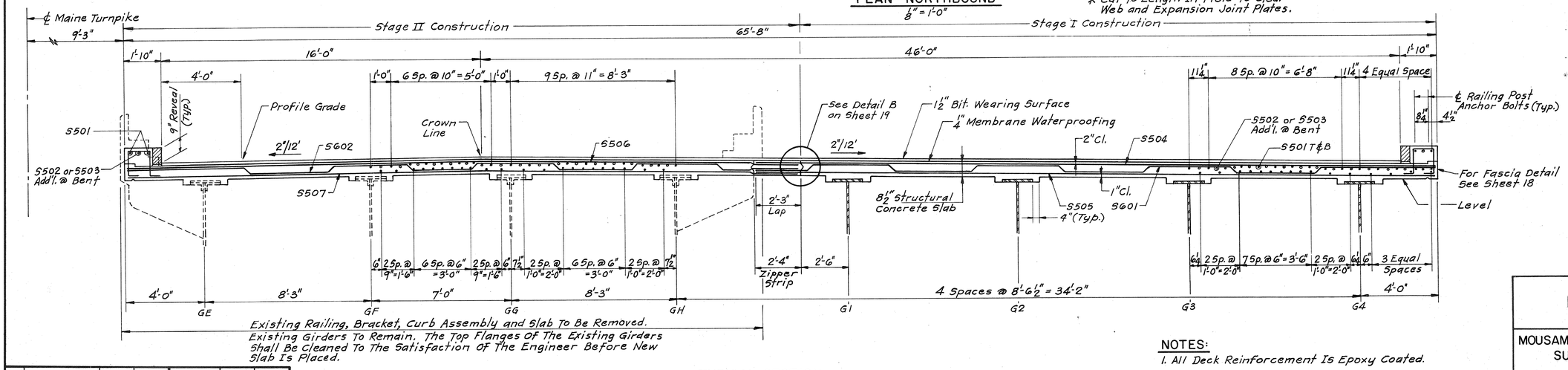

TYPICAL SECTION

3/8" = 1'-0"

NO.	REVISION	BY	DATE

	BY	DATE
DESIGNED:	K.A.C	6/88
DRAWN:	W.H.D	7/88
CHECKED:	C.F.M.	9/88
IN CHARGE OF	J.P.W.	

NOTES:

1. All Deck Reinforcement Is Epoxy Coated.
2. For End Post Reinforcement See Sheet 10.
3. For Superstructure Notes, See Sheet 19.
4. For Curb Detail, See Sheet 19.

MAINE TURNPIKE AUTHORITY

MAINE TURNPIKE

MOUSAM RIVER BRIDGE RECONSTRUCTION
SUPERSTRUCTURE DETAILS I
(NORTH BOUND)

HOWARD, NEEDLES, TAMMEN & BERGENDOFF
ARCHITECTS ENGINEERS PLANNERS
BOSTON

SCALE: AS NOTED
BRIDGE SHEET 17
SHEET NO. 33

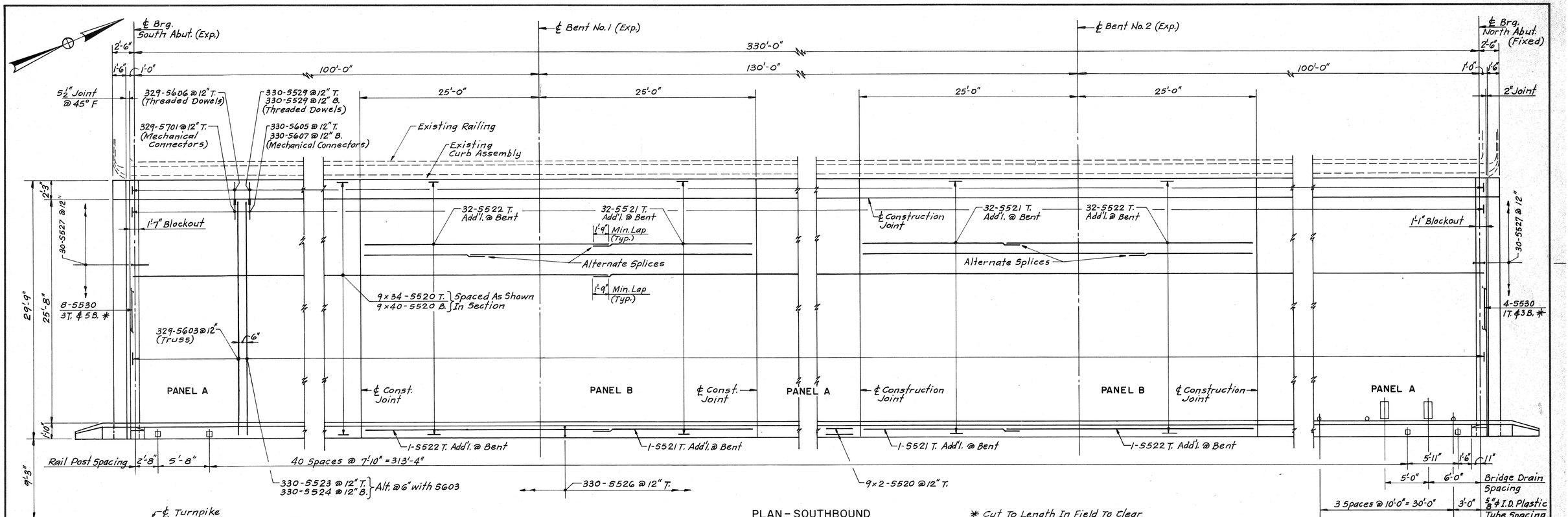

PLAN - SOUTHBOUND
3/16" = 1'-0"

* Cut To Length In Field To Clear Web and Expansion Joint Plates.

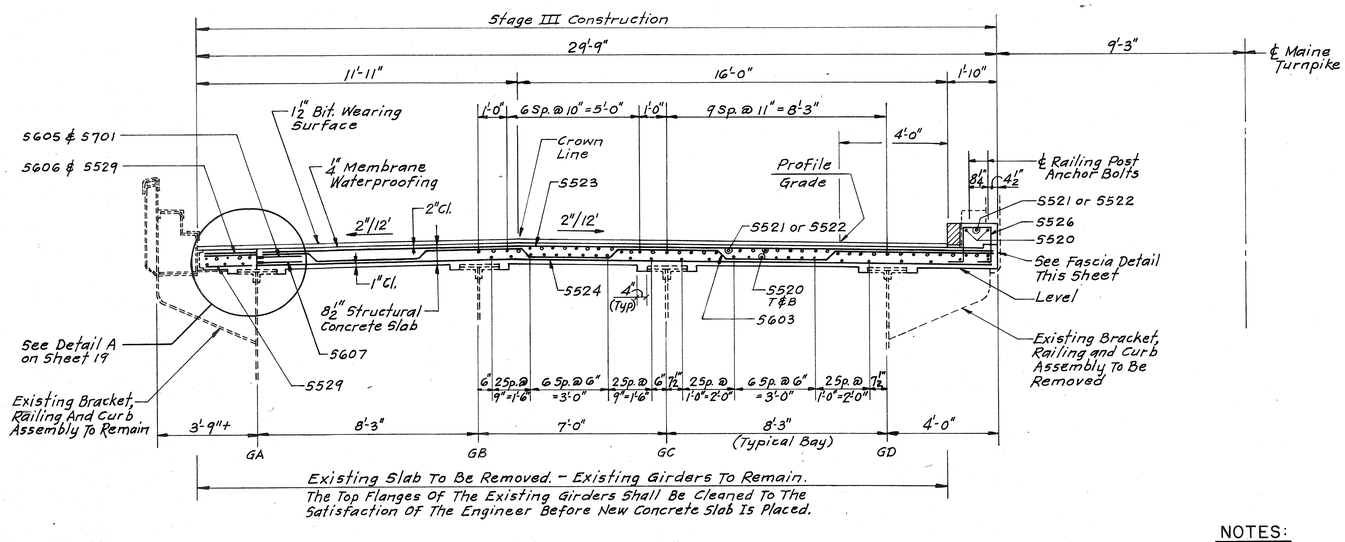

TYPICAL SECTION
3/8" = 1'-0"

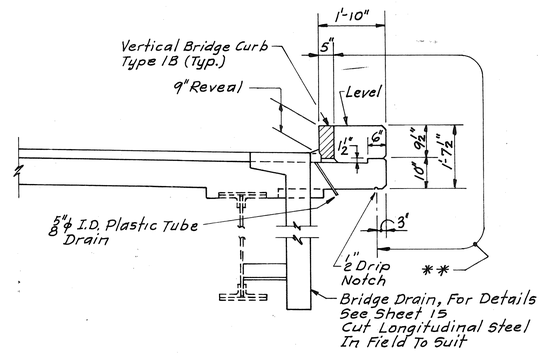

** Coat With "Protective Coating For Concrete Surfaces"

FASCIA DETAIL
1/2" = 1'-0"

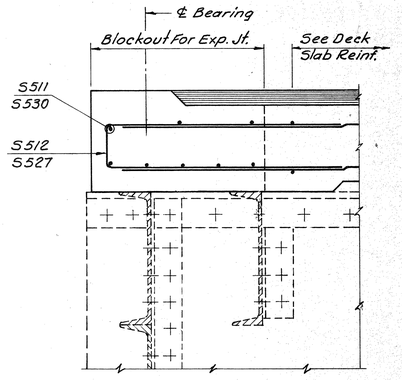

DECK SECTION OVER EXISTING GIRDERS
1½" = 1'-0"

NOTES:

1. All Deck Reinforcement Is Epoxy Coated.
2. For End Post Reinforcement See Sheet 10.
3. For Superstructure Notes, See Sheet 19.

NO.	REVISION	BY	DATE

	BY	DATE
DESIGNED:	K.A.C.	6/88
DRAWN:	W.H.D.	7/88
CHECKED:	C.F.M.	9/88
IN CHARGE OF	J.P.W.	

MAINE TURNPIKE AUTHORITY

MAINE TURNPIKE

MOUSAM RIVER BRIDGE RECONSTRUCTION
SUPERSTRUCTURE DETAILS II
(SOUTH BOUND)

HOWARD, NEEDLES, TAMMEN & BERGENDOFF
ARCHITECTS ENGINEERS PLANNERS
BOSTON

SCALE: AS NOTED
BRIDGE SHEET 18
SHEET NO. 34