CONTRACT 2015.12

Date:9/5/2015

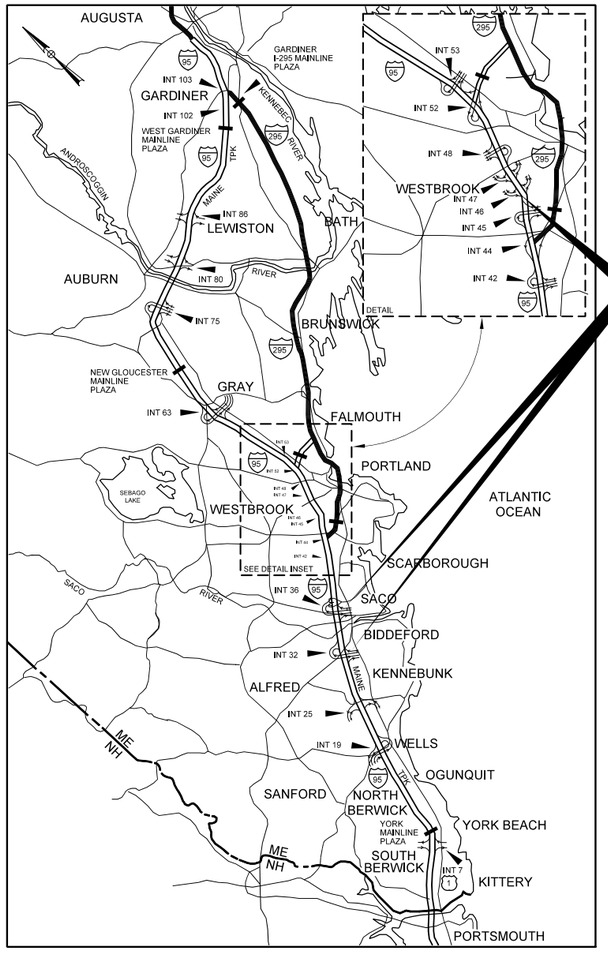

INTERCHANGES 32, 36, & 46 NB
TOLL SYSTEM UPGRADES
(MM 31.6, 35.7, & 46.4)

LOCATION MAP

MAINE TURNPIKE

THE GOLD STAR
MEMORIAL HIGHWAY

MAINE TURNPIKE AUTHORITY

DANIEL E. WATHEN, CHAIR
JAMES F. CLOUTIER, VICE CHAIR
GERARD P. CONLEY, SR., MEMBER
JOHN E. DORITY, MEMBER
ROBERT D. STONE, MEMBER
FREEMAN R. GOODRICH, MEMBER
KAREN DOYLE, MEMBER EX-OFFICIO

S. PETER MILLS, EXECUTIVE DIRECTOR

INTERCHANGES 32, 36, & 46 NB TOLL SYSTEM UPGRADES (MM 31.6, 35.7, & 46.4) CONTRACT 2015.12

INDEX OF SHEETS

HIGHWAY

SHEET NO.	DESCRIPTION
1	TITLE SHEET
2	ESTIMATED QUANTITIES
3	GENERAL NOTES & EARTHWORK SUMMARY
4	GENERAL NOTES
5-8	TYPICAL SECTIONS
9-23	MAINTENANCE OF TRAFFIC
24-25	INTERCHANGES 32 & 36 - GUARDRAIL DETAILS
26	INTERCHANGE 32 - EROSION CONTROL DETAILS
27	INTERCHANGE 32 - LIGHTING DETAILS
28	INTERCHANGE 32 - SIGNING DETAILS
29	INTERCHANGE 32 - MISCELLANEOUS DETAILS
30-32	INTERCHANGE 32 - UNDERDRAINED SOIL FILTER DETAILS
33-34	INTERCHANGE 36 - BARRIER DETAILS
35	INTERCHANGE 36 - SNOW FENCE DETAILS
36-38	INTERCHANGE 32 - GENERAL PLANS
39	INTERCHANGE 32 - LIMITS OF DISTURBANCE PLAN
40-42	INTERCHANGE 32 - SIGNING AND STRIPING PLANS
43-45	INTERCHANGE 32 - SIGN SUMMARIES
46-58	INTERCHANGE 32 - CROSS SECTIONS
59	INTERCHANGE 36 - GENERAL PLAN
60	INTERCHANGE 36 - LIMITS OF DISTURBANCE PLAN
61	INTERCHANGE 46 NB - GENERAL PLAN
62	INTERCHANGE 46 NB - LIMITS OF DISTURBANCE PLAN

STRUCTURAL

SHEET NO.	DESCRIPTION
63-98	STRUCTURAL PLANS

ELECTRICAL AND MECHANICAL

SHEET NO.	DESCRIPTION
99	INTERCHANGES 32 & 46 NB - BOOTH DETAILS
100-104	INTERCHANGE 32 - ELECTRICAL AND MECHANICAL PLANS
105-107	INTERCHANGE 36 - ELECTRICAL AND MECHANICAL PLANS
108-112	INTERCHANGE 46 - ELECTRICAL AND MECHANICAL PLANS
113	INTERCHANGE 47 - ELECTRICAL AND MECHANICAL PLANS
114	SENSOR DETAILS
115	TYPICAL POWER & COMMUNICATIONS LINE DIAGRAM
116	TYPICAL TOLL LANE POWER SCHEDULE
117	TYPICAL TOLL LANE DATA SCHEDULE
118	TYPICAL TOLL LANE NETWORK SCHEDULE

APPROVED:
MAINE TURNPIKE AUTHORITY

WILLIAM H. YATES - DIRECTOR OF IT AND COMMUNICATIONS — DATE 8AUG15

STEPHEN R. TARTRE, P.E., - DIRECTOR OF ENGINEERING & BUILDING MAINTENANCE — DATE 8/28/15

MECHANICAL SYSTEMS ENGINEERS

STATE OF MAINE — Kurt F. Magnusson 10257 — REGISTERED PROFESSIONAL ENGINEER

MECHANICAL DESIGN
MECHANICAL SYSTEMS ENGINEERS
SHEETS EM-01 TO EM-12
KURT MAGNUSSON, P.E. — DATE 8/27/15

STATE OF MAINE — LAWRENCE E. BARTLETT No. 7928 — LICENSED PROFESSIONAL ENGINEER

Bartlett Design

ELECTRICAL DESIGN
BARTLETT DESIGN
SHEETS GP-01 AND GP-02
AND EM-01 AND EM-12
LAWRENCE E. BARTLETT, P.E. — DATE 8/27/15

HNTB

STATE OF MAINE — ROLAND A. LAVALLEE No. 6452 — LICENSED PROFESSIONAL ENGINEER

ROLAND A. LAVALLEE P.E., PLS
VICE PRESIDENT
DIRECTOR OF OPERATIONS — DATE 8/27/15

Filename: 001_MTATitle.dgn

CONTRACT 2015.12

Item No.	Item Description	Unit	Interchange 32	Interchange 36	Interchange 46 NB	Contract Items	Total Quantity
202.017	Removing Asbestos Containing Materials	LS	1				1
202.17	Removing Existing Structural Concrete	LS	0.33	0.33	0.33		1
202.202	Removing Pavement Surface	SY	1000	1080	360		2440
203.20	Common Excavation	CY	3550	80	145		3775
203.45	Clay Borrow	CY	14				14
206.08	Structural Earth Excavation – Major Structures	CY	66		132		198
304.09	Aggregate Base Course - Crushed	CY	540		85		625
304.10	Aggregate Subbase Course - Gravel	CY	2050		29		2079
403.207	Hot Mix Asphalt, 19.0 mm Nominal Maximum Size	TON	640		10		650
403.2083	Hot Mix Asphalt, 12.5 mm Nominal Maximum Size, Surface	TON	0	90	35		125
403.209	Hot Mix Asphalt, 9.5 mm Nominal Maximum Size (sidewalks, drives, islands & incidentals)	TON	65	140	6		211
403.211	Hot Mix Asphalt (shimming)	TON	25				25
403.213	Hot Mix Asphalt, 12.5 mm Nominal Maximum Size, Base	TON	950		10		960
409.15	Bituminous Tack Coat, Applied	GAL	460	86	30		576
419.30	Sawing Bituminous Pavement	LF	3350	1200	85		4635
502.262	Structural Concrete, Pavement Slabs	CY	215	173	100		488
502.263	Structural Concrete - Plaza Islands, Bumpers Curtain Walls, and Barrier	CY	91	9	91		191
502.265	Structural Concrete - Utility Pits	CY	21		21		42
502.266	Structural Concrete - Gantry Pedestals & Footings	CY	5				5
503.14	Epoxy-Coated Reinforcing Steel, Fabricated and Delivered	LB	13000	5300	11300		29500
503.15	Epoxy-Coated Reinforcing Steel, Placing	LB	13000	5300	11300		29500
503.18	Glass Fiber Reinforced Polymer (GFRP) Reinforcing Bars, Fabricated and Delivered - Entry Lanes	LB	20800	17100	7100		45000
503.19	Glass Fiber Reinforced Polymer (GFRP) Reinforcing Bars, Placing	LB	20800	17100	7100		45000
503.90	Synthetic Fiber Reinforcement	LB	1077	865	500		2442
506.14	Field Painting of Existing Steel	LS	0.3	0.3	0.3		1
506.17	Surface Preparation of Existing Steel	LS	0.3	0.3	0.3		1
506.18	Containment System and Pollution Control Measures	LS	0.3	0.3	0.3		1
506.191	Disposal of Hazardous or Toxic Material	LS	0.3	0.3	0.3		1
511.091	Temporary Earth Support Systems	LS	0.5		0.5		1
515.201	Pigmented Protective Coating for Concrete Surfaces	SY	50	50	50		150
515.202	Clear Protective Coating for Concrete Surfaces	SY	860	700	430		1990
515.23	Epoxy Overlay	SY	40	30	30		100
518.64	Concrete Slab Crack Repairs	LF	10	10	20		40
518.81	Partial Depth Concrete Island Repairs Type I ; <2"	SF	45	45	15		105
518.82	Partial Depth Concrete Island Repairs Type II; 2-6"	SF	45	45	15		105
518.83	Full Depth Concrete Island Repairs, > 6"	SF	18	18	6		42
526.306	Temporary Concrete Barrier Type I - Supplied by Authority	LS	0.5	0.5			1
526.307	Concrete Barrier Type I - Stormwater Filter	LF	40				40
526.308	Temporary Concrete Barrier, Type I - Single Face	LS	0.5		0.5		1
526.351	Median Barrier Type I - Precast	LF		369			369
526.361	Median Barrier Transition Type I - Precast	EA		2			2
527.303	Energy Absorbing System (CAT) - Remove and Reset	EA		1			1
527.305	Energy Absorbing System (CAT) - Remove and Stack	EA		1			1
527.341	Work Zone Crash Cushions - TL-3	UNIT	1	2			3
527.342	Work Zone Crash Cushions - TL-2	UNIT	1				1
603.159	12 inch Culvert Pipe Option III	LF	57				57
604.164	Rebuilding Catch Basin	EA	1				1
605.090	6 Inch Underdrain Type B	LF	155				155
605.016	6 Inch PVC Underdrain	LF	340				340
605.018	8 Inch PVC Underdrain	LF	320				320
605.040	Underdrain Type B Bedding	CY	180				180
606.1723	Bridge Transition Type III	EA	2	4			6
606.178	Guardrail Beam	LF	50	50			100
606.2401	Guardrail Type 3d - Double Rail	LF	262.5	150			412.5
606.278	Terminal End - Anchored End	EA	1				1
606.279	Terminal End - Anchored End, Thrie Beam	EA		1			1
606.352	Reflectorized Beam Guardrail Delineator	EA				40	40
606.353	Delineator Post	EA	7	1			8
606.354	Delineator Post - Remove and Reset	EA	13	1			14
606.3607	Guardrail - Remove and Reset, Single Rail	LF	50				50
606.3608	Guardrail - Remove and Reset, Double Rail	LF	350				350
606.3631	Guardrail - Remove, Stack and Dispose	LF	412.5	150			562.5
606.471	Single Offset Block - W-Beam	EA	10	10			20
606.48	Single Galvanized Steel Post	EA	20	20			40

Item No.	Item Description	Unit	Interchange 32	Interchange 36	Interchange 46 NB	Contract Items	Total Quantity
606.65	Guardrail Thrie Beam - Single Rail	LF		62.5			62.5
606.651	Guardrail Thrie Beam - Double Post, Nested Rail	LF		50			50
606.701	Asymmetrical Thrie Beam Transition	EA		1			1
606.80	Guardrail 350 FLEAT Terminal	EA	1	4			5
606.81	Guardrail 350 FLEAT Terminal - Remove and Reset	EA	1				1
607.4311	Snow Fence	LF		40			40
608.08	Reinforced Concrete Sidewalk	SY	15	30	20		65
609.11	Vertical Curb Type 1	LF	140		150		290
609.12	Vertical Curb Type 1 - Circular	LF	40		50		90
609.191	Concrete Curb Type 2	LF	30	60			90
609.234	Terminal Curb Type 1 - 4' Sections	EA			1		1
609.237	Terminal Curb Type 1 - 7' Sections	EA			1		1
609.26	Curb Transition Type B	EA	2				2
609.34	Curb Type 5	LF	410				410
609.35	Curb Type 5 - Circular	LF	7				7
610.18	Stone Ditch Protection	CY	27				27
610.181	Temporary Stone Check Dam	CY	18				18
613.319	Erosion Control Blanket	SY	980				980
615.07	Loam	CY	450		10		460
618.1301	Seeding Method Number 1, Plan Quantity	UNIT	3		1		4
618.1401	Seeding Method Number 2, Plan Quantity	UNIT	28				28
618.1411	Seeding Method Number 3, Plan Quantity	UNIT	7				7
618.143	Special Seeding	UNIT	8.1				8.1
619.1201	Mulch, Plan Quantity	UNIT	38		1		39
619.1202	Temporary Mulch	LS	0.5	0.25	0.25		1
620.58	Erosion Control Geotextile	SY	700				700
626.11	Precast Concrete Junction Box	EA	9				9
626.31	18 Inch Foundation	EA	5				5
626.32	24 Inch Foundation	EA	14				14
626.331	36 Inch Foundation	EA		1			1
627.73	Temporary 6 Inch Pavement Marking Tape	LF	2270	3490	430		6190
627.731	Temporary 6 Inch Black Pavement Marking Tape	LF	1550	2270	200		4020
627.77	Remove Existing Pavement Markings	SF	40				40
627.812	Temporary Raised Pavement Markers	EA				100	100
629.05	Hand Labor, Straight Time	HR				40	40
631.10	Air Compressor (including operator)	HR				40	40
631.11	Air Tool (including operator)	HR				40	40
631.12	All Purpose Excavator (including operator)	HR				40	40
631.171	Truck - small (including operator)	HR				40	40
631.32	Culvert Cleaner (including operators)	HR				40	40
631.36	Foreman	HR				40	40
631.50	Jackhammer (air tool including operator)	HR				40	40
631.51	Bucket Truck	HR				40	40
631.52	Scissor Lift	HR				40	40
631.53	Electrician	HR				40	40
631.54	Electrician's Apprentice	HR				40	40
631.55	Plumber	HR				40	40
634.175	Replacement LED Fixture	EA	4				4
634.208	Remove and Reset Light Standard	EA	5				5
634.209	Remove and Stack Light Standard	EA	2				2
634.210	Conventional Light Standard	EA	8				8
639.191	Field Office, Type B	EA				1	1
643.711	Lane Use Signal Installation	EA	4	3	3		10
643.712	Traffic Signal Remove and Relocate	EA		1			1
645.105	Remove and Stack Sign	EA	2				2
645.109	Remove and Reset Sign	EA	14				14
645.161	Breakaway Device Single Pole	EA	8				8
645.162	Breakaway Device Multi Pole	EA	2				2
645.251	Roadside Guide Signs, Type I	SF	20				20
645.271	Regulatory, Warning, Confirmation and Route Assembly Sign, Type I	SF	100				100
645.289	Steel H-Beam Poles	LB	360				360
645.501	Remove and Reset Plaza Sign No. 10	LS				1	1
652.30	Flashing Arrow	EA				1	1
652.312	Type III Barricades	EA	1	1	1		3
652.33	Drum	EA	110	42	28		180
652.34	Cone	EA				20	20
652.341	Temporary Flexible Delineator	EA	45	37			82
652.35	Construction Signs	SF	494	341	160		995
652.361	Maintenance of Traffic Control Devices	LS				1	1
652.41	Portable-Changeable Message Sign	EA				2	2
655.012	Installation of Cash Lane Controller Cabinet	EA	6	4	4		14
655.02	DVAS Mount Installation	EA	6	4	4		14

Item No.	Item Description	Unit	Interchange 32	Interchange 36	Interchange 46 NB	Contract Items	Total Quantity
655.04	Installation of Sensor Loops	LS				1	1
655.05	Installation of AVI Antennas	EA	1	0	1		2
655.06	Installation of AVI Readers	EA	1	0	0		1
655.07	Traffic Control Pedestal Preparation Work	EA	4	3	3		10
655.08	#2/0 Wire for UPS re-wiring	LF	0	0	200		200
655.09	Armor Cable - 10/3	LF	30	30	300		360
655.10	#4 AWG Wire	LF	1000	100	300		1400
655.101	#6 AWG Wire	LF	4600	100	300		5000
655.11	#10 AWG Wire	LF	1700	500	450		2650
655.12	#12 AWG Wire	LF	8000	5600	6500		20100
655.13	#14 AWG Wire	LF				500	500
655.14	4pr/24 (Category 5e) Cable	LF	4000	5000	3500		12500
655.15	LMR 400 Cable	LF	150	0	150		300
655.16	Fiber Optic Cable – 6 Fiber	LF	720	500	600		1820
655.17	IVIS Homerun Loop Cable (IMSA 50-2 #16)	LF	200	200	200		600
655.200	1 1/2" Schedule 40 PVC Conduit	LF	20	20	20		60
655.201	3" Schedule 40 PVC Conduit	LF	10	20	10		40
655.202	4" Schedule 40 PVC Conduit	LF				200	200
655.2021	1" Schedule 80 PVC Conduit	LF	100	50	100		250
655.203	1 1/2" Schedule 80 PVC Conduit	LF	550	440	285		1275
655.2031	2" Schedule 80 PVC Conduit	LF	210	170	120		500
655.204	3" Schedule 80 PVC Conduit	LF	25	50	20		95
655.205	4" Schedule 80 PVC Conduit	LF				20	20
655.206	1" Galvanized Rigid Metal Conduit	LF	200	55	175		430
655.2061	3/4" Galvanized Rigid Metal Conduit	LF				20	20
655.207	1 1/2" Galvanized Rigid Metal Conduit	LF	55	110	155		320
655.2071	2" Galvanized Rigid Metal Conduit	LF	190	190	100		480
655.208	3" Galvanized Rigid Metal Conduit	LF	20	20	20		60
655.209	1/2" Liquid Tight Metallic Flexible Conduit	LF				20	20
655.210	3/4" Liquid Tight Metallic Flexible Conduit	LF				20	20
655.2101	1 1/2" Liquid Tight Metallic Flexible Conduit	LF	20	20	20		60
655.2102	2" Liquid Tight Metallic Flexible Conduit	LF	20	20	20		60
655.211	1 1/2" Electrical Metallic Tubing Conduit	LF				20	20
655.212	2" Electrical Metallic Tubing Conduit	LF				20	20
655.215	3/4" Electrical Metallic Tubing Conduit	LF				20	20
655.216	1" Rigid Metal Conduit Conduits	EA	4	4	6		14
655.217	1 1/2" Rigid Metal Conduit Conduits	EA	16	16	16		48
655.218	2" Rigid Metal Conduit Conduits	EA	16	20	16		52
655.219	3" Rigid Metal Conduit Conduits	EA	2	2	4		8
655.221	Type A 4"x4"x2" interior, Pull Box	EA	5	5	5		15
655.222	Type C 12"x12"x6" NEMA 4x Pull Box	EA	9	7	9		25
655.223	Type D 12"x 12" x6"S.S. NEMA 4x Pull Box	EA	2	2	4		8
655.224	Type E 6"x6"x6" interior Steel Pull Box	EA	2	2	2		6
655.225	Type F 4"x4"x4" exterior plastic Pull Box	EA	8	6	8		22
655.226	Type G 8.5"x6.5"x 6" Quazite Pull Box	EA	2	0	2		4
655.227	Type H 21"x15"x16" Quazite Pull Box	EA	1	1	1		3
655.30	12" x 12" x 6" Galvanized Junction Box	EA				2	2
655.31	18" x 18" x 6" Galvanized Junction Box	EA				2	2
655.40	24" x 24" x 12" Junction Box	EA				2	2
655.42	36" x 30" x 20" NEMA 4X Cabinet	EA	1				1
655.63	4-inch x 4-inch Plastic NEMA 4R Wireway	LF	16	16	16		48
655.64	6-inch x 6-inch Plastic NEMA 4R Wireway	LF	16	12	16		44
655.71	Removal of Existing Select Toll Equipment	LS	0.34	0.33	0.33		1
655.80	Lightning Suppression System	EA	1	1	1	2	5
655.81	Key Switch	EA	8	8	6		22
655.82	Duplex Receptacle	EA	6	3	6		15
655.83	NEMA L5-30R Receptacle	EA	2	2	2		6
655.91	LED Canopy Light Fixture Install or Replace	EA	8	6	6		20
656.50	Baled Hay, in place	EA	10				10
656.60	Temporary Berms	LF	1660				1660
656.62	Temporary Slope Drains	LF	70				70
656.632	30" Temporary Silt Fence	LF	1320				1320
659.10	Mobilization	LS				1	1
668.011	Dutch Door Installation	EA	4	5			9
668.012	Toll Booth Repair	LS	0.5	0.5			1
673.01	Stormwater Soil Filter Bed	CY	230				230
800.101	Raising Canopy - Interchange 32	LS	1				1
800.201	Manhole Removal & Electrical/Mechanical Pit Rehab	LS		1			1
800.501	New Toll Booth and Canopy - Interchange 32 and 46	LS	0.5		0.5		1
800.601	Canopy Roof Replacement - Interchange 32 and 36	LS	0.5	0.5			1
800.701	New Canopy Sign Installation - Interchange 46 & 47	EA			1	1	2
800.801	Overhead Lane Use Sign	LS	1				1

Date:9/8/2015

Filename: 002_Est Qtys.dgn

Scale:

No.	Revision	By	Date

Designed by:

HNTB

CONSULTANT PROJECT MANAGER: R. Bruce Munger, P.E.

	By	Date		By	Date
Designed	CDH	08/15	Checked	RBM	08/15
Drawn	CDH	08/15	In Charge of	RAL	08/15

HNTB CORPORATION
340 County Road, Suite 6-C
Westbrook, ME 04092
TEL (207) 774-5155
FAX (207) 228-0909

MAINE TURNPIKE

THE GOLD STAR MEMORIAL HIGHWAY

MTA PROJECT MANAGER: William Yates

INTERCHANGES 32, 36, & 46 NB TOLL SYSTEM UPGRADES

ESTIMATED QUANTITIES

SHEET NUMBER: EQ-01

CONTRACT:2015.12

Date:9/5/2015

GENERAL

1. FOR LONG TERM CLOSURES LASTING MORE THAN 6 HOURS, ONLY ONE ENTRY OR EXIT LANE AT EACH PLAZA MAY BE CLOSED AT A TIME UNLESS OTHERWISE APPROVED BY THE MTA OR AS DIRECTED BY THIS CONTRACT'S PLANS AND SPECIFICATIONS. ALL TOLL EQUIPMENT MUST BE OPERATIONAL PRIOR TO REOPENING A LANE TO TRAFFIC.

2. ONCE WORK IN A LANE HAS STARTED, WORK IN THAT LANE SHALL CONTINUE UNINTERRUPTED UNTIL ALL WORK IN THAT LANE IS COMPLETE.

3. EXISTING UTILITIES ON THESE PLANS WERE COMPILED FROM FIELD SURVEY AND VARIOUS OTHER SOURCES. LOCATIONS ARE NOT GUARANTEED TO BE ACCURATE NOR IS IT GUARANTEED THAT ALL UTILITIES ARE SHOWN. NO SEPARATE OR ADDITIONAL COMPENSATION WILL BE ALLOWED TO THE CONTRACTOR DUE TO ANY VARIANCE BETWEEN THE DATA SHOWN ON THE PLANS AND THE ACTUAL FIELD CONDITIONS ENCOUNTERED. NO WORK SHALL BE STARTED UNTIL THE OWNERS OF THE VARIOUS UTILITIES ARE NOTIFIED BY THE CONTRACTOR OF THE PROPOSED CONSTRUCTION. THE CONTRACTOR IS ALSO REQUIRED TO CALL DIG SAFE AT 1-888-344-7233 PRIOR TO THE START OF THE WORK.

4. THE UTILITIES INVOLVED IN THIS CONTRACT ARE:

   A. MAINE TURNPIKE AUTHORITY
   B. CENTRAL MAINE POWER
   C. TIME WARNER CABLE
   D. FAIR POINT
   E. PORTLAND INTERNATIONAL JETPORT
   F. UNITIL
   G. PORTLAND PIPE LINE CORPORATION
   H. CITY OF BIDDEFORD - PUBLIC WORKS - SIGNAL
   I. CITY OF PORTLAND - PUBLIC WORKS - SIGNAL
   J. OTHERS

THE AUTHORITY IS RESPONSIBLE FOR MARKING MTA UTILITIES PRIOR TO CONSTRUCTION. THE MTA MAY USE DIG SMART OF MAINE FOR UTILITY LOCATION. THE CONTRACTOR SHALL COORDINATE WITH THE RESIDENT IN ORDER TO CONTACT DIG SMART OR MTA PERSONNEL.

5. ALL DETAILS SHALL BE IN CONFORMANCE WITH MAINE DEPARTMENT OF TRANSPORTATION (MaineDOT) STANDARD DETAILS HIGHWAYS AND BRIDGES 2002 WITH UPDATES AND MaineDOT BEST MANAGEMENT PRACTICES FOR EROSION AND SEDIMENT CONTROL LATEST REVISION UNLESS OTHERWISE INCLUDED IN THESE PLANS.

6. THE CONTRACTOR SHALL MAINTAIN ACCESS TO EMPLOYEE PARKING AT ALL INTERCHANGES AT ALL TIMES DURING CONSTRUCTION.

7. WASTE MATERIALS SHALL BE DISPOSED OF OFF THE PROJECT SITE, IN ACCORDANCE WITH CHAPTER 404 DEPARTMENT OF ENVIRONMENTAL PROTECTION SOLID WASTE MANAGEMENT RULES.

8. ALL REMAINING ISLAND BOLLARDS AT INTERCHANGE 46 WILL BE COVERED WITH A HIGH STRENGTH PLASTIC BOLLARD SLEEVE/COVER. SEE SPECIFICATION 669. THE BOLLARDS COVERS WILL BE PAID FOR UNDER ITEM 669.001. THE BOLLARDS LOCATED WITHIN THE SIDEWALKS AT INTERCHANGE 46 SHALL BE REMOVED AT THE TOP OF THE BOLLARD FOUNDATION. GRANITE CURB SHALL BE REMOVED AND RESET AND THE SIDEWALK SHALL BE RECONSTRUCTED. THIS WORK SHALL BE INCIDENTAL TO ITEM 202.12 - REMOVING EXISTING STRUCTURAL CONCRETE.

9. PRIOR TO THE START OF WORK IN A LANE THE CONTRACTOR SHALL COVER CANOPY SIGNS OVER THE LANE AND ALL REMAINING OPEN LANES SHALL HAVE THE APPROPRIATE CANOPY SIGN ACTIVATED AND/OR REMOVED AND RESET BY THE CONTRACTOR. THE CONTRACTOR MAY USE GROUND MOUNTED SIGNS PROVIDED BY THE MTA TO INDICATE OPEN LANES. ALL CANOPY SIGN WORK SHALL BE INCIDENTAL TO ITEM 202.12 - REMOVING EXISTING STRUCTURAL CONCRETE.

10. ITEM 403.209 - HOT MIX ASPHALT, 9.5 MM NOMINAL MAXIMUM SIZE, HAND PLACED INCIDENTALS SHALL BE USED AT LOCATIONS TO BE DETERMINED BY THE RESIDENT.

11. THE BITUMINOUS PAVEMENT DEPTH HAS BEEN ASSUMED TO BE 6" AT EXITS 32 AND 36 AND 7½" AT EXIT 46 NB, BUT MAY VARY. FULL DEPTH REMOVAL OF BITUMINOUS PAVEMENT WILL BE PAID UNDER ITEM 203.20 - COMMON EXCAVATION.

12. ANY SAWCUT OF PAVEMENT RELATED TO COMMON EXCAVATION FOR SLAB LENGTHENING SHALL BE INCIDENTAL TO ITEM 203.20 - COMMON EXCAVATION.

13. FINAL PAVEMENT MARKINGS SHALL BE INSTALLED BY THE AUTHORITY.

14. EXCAVATED GRAVEL SHALL NOT BE STOCKPILED ON SITE.

15. NO SMOKING WITHIN 25' OF TOLL BUILDINGS OR MANNED TOLL BOOTHS.

16. TOLL BOOTHS FOR INTERCHANGES 32 AND 46 NB SHALL BE SUPPLIED BY THE MAINE TURNPIKE AUTHORITY. THE CONTRACTOR SHALL BE RESPONSIBLE FOR TRANSPORT OF THE BOOTHS FROM THE CUMBERLAND MAINTENANCE FACILITY AND INSTALLATION AT INTERCHANGES 32 AND 46 NB. ALL WORK ASSOCIATED WITH THIS ITEM IS INCIDENTAL TO ITEM 800.401.

17. ALL EXISTING DELINEATOR AND MILE MARKER POSTS SHALL BE REMOVED AND RESET UPON COMPLETION OF THE CONTRACT. PAYMENT FOR RESETTING DELINEATOR POSTS SHALL BE MADE UNDER ITEM 606.354. NEW DELINEATOR POSTS SUPPLIED BY THE CONTRACTOR SHALL BE PAID FOR UNDER ITEM 606.353.

18. PAYMENT FOR THE REMOVAL OF EXISTING GUARDRAIL END TREATMENTS SHALL BE MADE UNDER ITEM 606.3631 - GUARDRAIL - REMOVE, STACK, AND DISPOSE UNLESS NOTED OTHERWISE ON THE PLANS.

TOLLING

1. THE CONTRACTOR SHALL REMOVE AND DISPOSE OF THE FOLLOWING ITEMS:

   A. TREADLE FRAMES
   B. LANE CONTROLLER ENCLOSURE

2. THE CONTRACTOR SHALL SALVAGE THE FOLLOWING ITEMS AND DELIVER TO THE MAINE TURNPIKE SIGN SHOP AT MILE MARKER 58.3:

   A. OVERHEAD CANOPY (RED/GREEN) LIGHTS AND HOUSINGS.

3. THE CONTRACTOR SHALL SALVAGE THE FOLLOWING ITEMS AND DELIVER TO TRANSCORE'S WAREHOUSE AT TRANSCORE INC., 190 RIVERSIDE ST UNIT 3B, PORTLAND, ME. :

   A. OVERHEAD SCANNERS

4. TRANSCORE SHALL PROVIDE THE FOLLOWING ITEMS TO BE INSTALLED BY THE CONTRACTOR:

   A. PELCO MOUNTING HOOK FOR THE DVAS CAMERA
   B. IVIS LOOP SENSORS, TEMPLATES FOR LOOP LAYOUT, AND ANY LAYOUT FOR CUTTING CONCRETE. THE CONTRACTOR SHALL SUPPLY THE EQUIPMENT AND LABOR FOR CUTTING CONCRETE FOR INSTALLATION OF THE LOOPS.
   C. TRAFFIC CONTROL PEDESTAL
   D. NEW CANOPY OVERRIDE SWITCH

5. THE CONTRACTOR SHALL PROVIDE AND INSTALL THE FOLLOWING ITEMS:

   A. ALL REQUIRED JUNCTION BOXES/PULL BOXES (INCLUDING ALL MOUNTING SUPPORTS), CONDUIT, FITTINGS, AND ASSOCIATED COMMUNICATION AND ELECTRICAL WIRING.
   B. LANE USE SIGNAL (RED X AND GREEN ↓) TO REPLACE CURRENT CANOPY SIGNAL LIGHTS.

6. ITEMS ASSOCIATED WITH CASH/ETC LANES TO REMAIN ARE:

   A. RECEIPT PRINTER (BOOTH)
   B. AVI ANTENNA (CANOPY)
   C. CANOPY OVERRIDE SWITCH (BOOTH)
   D. AVI READER (BOOTH)
   E. POWER AND DATA CABLING THAT CAN BE REUSED (CONDUIT, BOOTH, LANE)

7. TRANSCORE SHALL PROVIDE, INSTALL, AND TERMINATE DATA TO THE FOLLOWING ITEMS:

   A. DVAS CAMERA AND COSTAR ENCLOSURE
   B. NEW LANE AND ASSOCIATED CONTROLLERS AND NETWORK SWITCH
   C. TRAFFIC CONTROL PEDESTAL (PROVIDE AND TERMINATE ONLY)
   D. LANE CONTROLLER ENCLOSURE AND METAL CLEATS (PROVIDE AND TERMINATE ONLY)
   E. MANUAL LANE TERMINAL
   F. ENVIRONMENTALLY CONTROLLED ENCLOSURES FOR EXTERIOR MOUNTED LANE CONTROLLERS.

8. TRANSCORE SHALL REMOVE AND SALVAGE THE FOLLOWING ITEMS:

   A. VIOLATION ENFORCEMENT SYSTEM (VES CAMERAS, LIGHTS AND MOUNTING HARDWARE AND PEDESTAL)
   B. MANUAL LANE TERMINAL
   C. LIGHT CURTAINS, HEIGHT DETECTORS AND ENCLOSURES
   D. VIOLATION ENFORCEMENT SYSTEM CONTROLLER AND CABINET
   E. PATRON FARE DISPLAY
   F. EXISTING LANE CONTROLLER
   G. ISLAND TRAFFIC LIGHTS AND MOUNTING POLES
   H. TREADLE INSERTS

9. AT EACH PLAZA, ONE DVAS CAMERA PELCO MOUNTING HOOK SHALL BE INSTALLED SERVING EACH INDIVIDUAL ENTRY LANE, AND ONE SHALL BE INSTALLED SERVING ALL EXITING LANES.

10. PELCO MOUNT HOOKS FOR EACH ENTRY LANE SHALL BE INSTALLED ON EXISTING GALVANIZED ANGLE STUBS EXTENDING OUT OF THE CANOPY DROP CEILINGS AT EACH PLAZA. THE MOUNTING HOOKS SHALL BE SECURED TO A 2" GALVANIZED RIGID PIPE SECURED TO THE ANGLE STUBS VIA GALVANIZED "U" BOLTS. THE FINAL LOCATION OF THE MOUNTING HOOKS SHALL BE REVIEWED AND APPROVED BY TRANSCORE AND THE MAINE TURNPIKE AUTHORITY PRIOR TO INSTALLATION.

11. THE CONTRACTOR WILL COORDINATE WITH THE MAINE TURNPIKE RESIDENT PRIOR TO STARTING WORK ON THE WIDE LOAD LANE AT EACH PLAZA. THE MAINE TURNPIKE AUTHORITY REQUIRES A 14 DAY NOTICE PRIOR TO CLOSURE OF A WIDE LOAD LANE.

12. WIDE LOAD RESTRICTIONS FOR ENTRY AND EXIT LANES AT EXIT 32 AND 36 SHALL NOT RUN CONCURRENTLY.

CONSTRUCTION STAGING

1. TWO EXIT LANES SHALL REMAIN OPEN AT INTERCHANGES 32 AND 36 THROUGH THE RECONSTRUCTION OF EXIT LANES UNLESS OTHERWISE APPROVED BY THE MTA OR AS DIRECTED BY THIS CONTRACT'S PLANS AND SPECIFICATIONS. A CONSTRUCTION PHASE LINE IS SHOWN ON THE PLAN. DURING THE EXIT LANE CONSTRUCTION PHASES, A MAIN LINE WIDE LOAD RESTRICTION WILL BE REQUIRED AND THE MAINE TURNPIKE AUTHORITY WILL REQUIRE A MINIMUM OF 14 DAYS ADVANCE NOTICE PRIOR TO THE START OF THESE CONSTRUCTION PHASES.

EARTHWORK SUMMARY

COMMON EXCAVATION FOR ESTIMATE

COMMON EXCAVATION (FROM CROSS SECTIONS)	3,202		
GRUBBING IN FILL	338		
TOTAL COMMON EXCAVATION			3,540
ITEM 203.20	SAY		3,550

FILL FOR BORROW CALCULATIONS

COMMON FILL (FROM CROSS SECTIONS)	440		
GRUBBING IN FILL	338		
TOTAL FILL			778

AVAILABLE COMMON EXCAVATION FOR BORROW CALCULATIONS

(1) TOTAL COMMON EXCAVATION			3,540
DEDUCTIONS:			
GRUBBING IN CUT	882		
GRUBBING IN FILL	338		
PAVEMENT REMOVAL	325		
(2) TOTAL DEDUCTIONS			1,545
TOTAL AVAILABLE COMMON EXCAVATION (1) MINUS (2)			1,995
TOTAL AVAILABLE NON-ROCK EXCAVATION			1,995

COMPUTATION FOR COMMON BORROW FOR ESTIMATE

(3) TOTAL FILL				778
TOTAL AVAIL. NON-ROCK EXCAV.	1,995 x 0.85 =	1,696		
(4) TOTAL AVAILABLE EXCAVATION			=	1,696
(4) - (3) SURPLUS MATERIAL =				918

TOLL SYSTEM INTEGRATOR

1. THE CONTRACTOR'S SCHEDULE OF WORK SHALL ACCOUNT FOR THE INSTALLATION OF THE NEW TOLLING EQUIPMENT IN EACH LANE (10 WORKING DAYS PER LANE). ALL CIVIL WORK IN A LANE SHALL BE COMPLETED BY THE CONTRACTOR PRIOR TO THE INSTALLATION OF THE NEW TOLLING EQUIPMENT IN THE RESPECTIVE LANE. NEW TOLLING EQUIPMENT IS TO BE INSTALLED, TERMINATED, AND TESTED BY THE TOLL SYSTEM INTEGRATOR.

2. A LANE SHALL NOT BE OPENED TO TRAFFIC UNTIL ALL NEW TOLLING EQUIPMENT HAS BEEN INSTALLED IN THE RESPECTIVE LANE, HAS BEEN TESTED, AND COMMISIONING HAS BEEN ACCEPTED BY THE MTA.

3. THE TOLL SYSTEM INTEGRATOR WILL HAVE 10 BUSINESS DAYS. THE CONTRACTOR WILL NEED TO ACCOUNT FOR THE TOLL SYSTEM INTEGRATOR WITHIN THEIR SCHEDULE OF WORK.

ELECTRICAL

1. LOOP GRADIENT SENSOR CONDUIT STUB-UPS WILL BE CONNECTED TO A HOME RUN CONDUIT VIA A 3" SANITARY TEE OR 90 PVC DMV.

2. ALL CONDUIT LOCATED IN THE TOLL LANES SHALL BE INSTALLED IN THE ROADWAY SUBBASE, BELOW THE CONCRETE SLAB. THE ONLY CONDUIT LOCATED WITHIN THE CONCRETE SLAB IS FOR STUB-UPS.

3. "KEY SWITCHES" WILL BE INSTALLED FOR THE INLINE CLEAN POWER OF EACH DVAS AND VES. CLEAN POWER SWITCHES SHALL BE REUSED FOR ALL LANES WITH EXISTING SWITCHES. POWER AND DATA CABLES FROM THE LANE CONTROLLERS TO THE DVAS SHALL BE ROUTED UP THROUGH CANOPY SUPPORT COLUMNS AND ABOVE CANOPY DROP CEILING PANELS. ALL WORK TO REMOVE AND RESET DROP CEILING PANELS SHALL BE INCIDENTAL TO DVAS MOUNT INSTALLATION, 655.02. ANY CABLES AND/OR WIRES RUN TO DEVICES ON CANOPIES WITH OUT DROP CEILINGS SHALL BE RUN IN CONDUIT.

4. ALL EXISTING CONDUIT RUNS SHALL BE REUSED WHEN POSSIBLE. EXISTING CONDUIT RUNS SHALL NOT BE ABANDONED UNLESS REVIEWED AND APPROVED OR AS DIRECTED BY TRANSCORE AND THE MAINE TURNPIKE AUTHORITY.

5. THE CONTRACTOR WILL RELOCATE AND MAINTAIN THE OUTBOARD LIGHT BARS AT LANE 5 AT EXIT 32 AND LANE 5 AT EXIT 46 NB IN ORDER TO CONSTRUCT THE NEW LANES AT THESE TOLL PLAZAS.

Filename: 003_GeneralNotes1.dgn

No.	Revision	By	Date

Scale:

Designed by: HNTB

CONSULTANT PROJECT MANAGER: R. Bruce Munger, P.E.

	By	Date		By	Date
Designed	CDH	08/15	Checked	RBM	08/15
Drawn	CDH	08/15	In Charge of	RAL	08/15

HNTB CORPORATION
340 County Road, Suite 6-C
Westbrook, ME 04092
TEL (207) 774-5155
FAX (207) 228-0909

MAINE TURNPIKE

THE GOLD STAR MEMORIAL HIGHWAY

MTA PROJECT MANAGER: William Yates

INTERCHANGES 32, 36, & 46 NB TOLL SYSTEM UPGRADES

GENERAL NOTES AND EARTHWORK SUMMARY

SHEET NUMBER: GN-01

CONTRACT:2015.12

Date:9/5/2015

PLAZA STRUCTURAL REPAIRS

1. EXITS 32 AND 36 WILL REQUIRE REPAIRS TO PLAZA ISLANDS, BOOTHS, CANOPY, AND BOOTH UTILITY VAULTS.

2. THE MANHOLE AT EXIT 36 EXITING LANES SHALL BE REMOVED AND THE UTILITY PIT BELOW IT SHALL BE REHABILITATED, WHICH SHALL INCLUDE THE INSTALLATION OF NEW CONDUIT, REPLACEMENT OF HEATING CIRCUIT PIPING AND ANY NEEDED REROUTING OF CONDUITS, ELECTRICAL AND COMMUNICATION LINES.

3. ALL REPLACEMENT AND REPAIRS ARE DETAILED IN THE CONTRACT PLANS AND SPECIFICATIONS.

PLAZA FIELD PAINTING

1. EXITS 32 AND 36 WILL REQUIRE FIELD CLEANING AND PAINTING OF TOLL PLAZA CANOPY COMPONENTS.

2. THE LIMITS OF WORK, FIELD CLEANING, PAINTING, CONTAINMENT, AND HAZARDOUS WASTE DISPOSAL REQUIREMENTS ARE DETAILED IN SPECIAL PROVISION 506.

3. SEE APPENDIX C OF THE CONTRACT DOCUMENTS - CANOPY CONTAINMENT DETAILS FOR CONTAINMENT REQUIREMENTS.

EROSION CONTROL

1. THE ANTICIPATED EROSION CONTROL DEVICES ARE SHOWN ON THE PLANS. THE CONTRACTOR SHALL PROPOSE ACTUAL TYPE AND LOCATION OF DEVICES FOR APPROVAL BY THE RESIDENT. ADDITIONAL MEASURES MAY BE PROPOSED BY THE CONTRACTOR DUE TO SITE OR WEATHER CONDITIONS. THE RESIDENT MAY DIRECT THE CONTRACTOR TO IMPLEMENT ADDITIONAL MEASURES. ANY ADDITIONAL MEASURES APPROVED BY THE RESIDENT WILL BE MEASURED FOR PAYMENT.

2. 4" LOAM HAS BEEN ESTIMATED FOR 100% OF THE DISTURBED SLOPE AREA UNLESS OTHERWISE SPECIFIED ON THE PLANS. ACTUAL PLACEMENT OF THE LOAM SHALL BE AS DESIGNATED BY THE RESIDENT.

3. NEWLY DISTURBED EARTH SHALL BE MULCHED BY THE END OF EACH WORK DAY. MULCH SHALL BE MAINTAINED ON A DAILY BASIS. THIS WORK SHALL BE PAID FOR UNDER ITEM 619.1202 TEMPORARY MULCH.

4. ALL TEMPORARY AND PERMANENT EROSION CONTROL DEVICES SHALL BE INSTALLED IN ACCORDANCE WITH THE MAINE DEPARTMENT OF TRANSPORTATION BEST MANAGEMENT PRACTICES.

5. TEMPORARY SEED SHALL BE APPLIED TO ALL DISTURBED AREAS THAT WILL NOT BE COMPLETED WITHIN 30 DAYS.

6. TEMPORARY EROSION CONTROL BLANKET, ITEM 613.319 SHALL BE INSTALLED IN ALL DITCHES AND 2:1 SLOPES FROM TOP TO TOE OF SLOPE. LOAM AND SEED SHALL BE PLACED PRIOR TO THE INSTALLATION OF THE EROSION CONTROL BLANKET. LIMITS OF THE EROSION CONTROL BLANKET IN DITCHES SHALL BE 6' WIDE OR AS DESIGNATED BY THE RESIDENT. SEEDING METHOD NO. 3 SHALL BE USED BEHIND GUARDRAIL AND SEEDING METHOD NO. 1 SHALL BE USED AT AND AROUND THE PLAZA BUILDING. ALL OTHER AREAS SHALL BE SEEDED WITH METHOD NO. 2.

MAINTENANCE OF TRAFFIC

1. CANOPY LIGHT ABOVE CLOSED LANES SHALL BE RED.

2. CANOPY SIGNAGE ABOVE CLOSED LANES SHALL BE COVERED.

3. CONTRACTOR SHALL MAINTAIN A 5' WIDE PATHWAY FOR MTA EMPLOYEES TO ACCESS PLAZA BUILDING AND TOLL BOOTHS TO CROSS WORK ZONES SAFELY DURING ALL PHASES OF WORK. THIS MAY REQUIRE BREAKS IN BARRIER, USE OF BARRELS, SAFETY TAPE DELINEATING PATHS AND TEMPORARY SIGNAGE. THE PATH SHALL BE LIGHTED FROM DUSK TO DAWN AND FREE FROM TRIP HAZARDS. LIGHTING, SIGNAGE AND SAFETY TAPE SHALL BE INCIDENTAL TO ITEM 659.10 MOBILIZATION.

4. REFER TO APPENDIX C OF SPECIFICATIONS FOR PLAZA SAFETY REQUIREMENTS.

GUARDRAIL

1. CONTRACTOR SHALL STOCKPILE ALL GUARDRAIL TO BE REMOVED AND RESET, REMOVED AND STACKED AND REMOVED, MODIFIED AND RESET UNTIL GUARDRAIL INSTALLATION HAS BEEN COMPLETE. STOCKPILING THE GUARDRAIL SHALL BE INCIDENTAL TO ITEM 606.3631 GUARDRAIL - REMOVE AND DISPOSE. ALL USABLE EXISTING GUARDRAIL SHALL BE MODIFIED AND RESET PRIOR TO BEING PAID TO INSTALL NEW GUARDRAIL. ANY USABLE GUARDRAIL REMAINING AFTER ALL GUARDRAIL HAS BEEN INSTALLED SHALL BE DELIVERED TO CROSBY MAINTENANCE AT MILE MARKER 45.8, SB.

2. FOR ALL NEW GUARDRAIL TYPES 3d W-BEAM AND THRIE-BEAM SINGLE AND DOUBLE RAIL - OFFSET BLOCKS SHALL BE NON-WOOD CONFORMING TO NCHRP 350 TEST LEVEL 3.

3. ALL PROPOSED GUARDRAIL AND RESET GUARDRAIL SHALL BE INSTALLED IN A MANNER TO AVOID ELECTRICAL AND DRAINAGE STRUCTURES.

4. DAMAGE TO EXISTING PAVEMENT OR NEW PAVEMENT DUE TO THE INSTALLATION OF NEW OR RESET GUARDRAIL SHALL BE REPAIRED AND PAYMENT SHALL BE INCIDENTAL TO THE GUARDRAIL ITEMS.

5. EXISTING TUBULAR MARKERS SEPARATING OPPOSING TRAFFIC IN THE TOLL PLAZA SHALL BE REMOVED DURING PHASE 1 TRAFFIC CONTROL AND STACKED AT CROSBY MAINTENANCE AT MILE MARKER 45.8 SB.

6. AT THE END OF THE WORK DAY, EVERYDAY, THE CONTRACTOR IS REQUIRED TO HAVE AN APPROVED CRASHWORTHY END TREATMENT ON ALL GUARDRAIL AND BARRIER WITHIN ALL WORK AREAS THAT ARE ACCESSIBLE TO TRAFFIC.

7. CONNECTIONS FOR PROPOSED GUARDRAIL TO EXISTING GUARDRAIL SHALL BE INCIDENTAL TO THE PROPOSED GUARDRAIL ITEMS.

8. TWO GUARDRAIL DELINEATOR POSTS SHALL BE INSTALLED AT EACH FLEAT.

9. ALL NEW AND RESET GUARDRAIL TYPE 3d SHALL BE INSTALLED AT 30 INCHES HIGH EXCEPT WHERE TRANSITIONING TO EXISTING RAIL.

EARTHWORK

1. EXCAVATIONS ACCOMPLISHED AS PART OF THIS PROJECT SHALL BE CONSTRUCTED IN ACCORDANCE WITH OSHA SUBPART P OF 29 CFR PART 1926.650-652 (CONSTRUCTION STANDARDS FOR EXCAVATION).

2. AN OVERBURDEN DEPTH OF 1' IS ASSUMED FOR USE IN ESTIMATING ROCK EXCAVATION AND ESTIMATING CLEARING LIMITS WHERE ROCK OUTCROPS ARE PRESENT IN SHOULDER WIDENING AREAS. ROCK PROBES WERE NOT CONDUCTED IN THESE AREAS TO VERIFY OR DETERMINE DEPTH OF EXISTING OVERBURDEN. ACTUAL ROCK EXCAVATION AND CLEARING LIMITS MAY CHANGE FROM WHAT IS SHOWN ON PLANS.

3. THE CONTRACTOR SHALL REMOVE EXISTING MACADAM WHEN ENCOUNTERED AND SHALL BE PAID FOR AS COMMON EXCAVATION ITEM 203.20.

DRAINAGE

1. NO EXISTING DRAINAGE SHALL BE ABANDONED, REMOVED OR PLUGGED WITHOUT PRIOR APPROVAL OF THE RESIDENT.

2. INLETS AND OUTLETS OF ALL CULVERTS SHALL BE RIPRAPPED UNLESS OTHERWISE NOTED ON THE PLANS OR DIRECTED BY THE RESIDENT.

3. ALL DITCH ELEVATIONS AND OFFSETS SHOWN ON THE CROSS SECTIONS ARE FOR THE FINISHED DITCH FLOW LINE.

4. ANY NECESSARY CUTTING OF EXISTING PIPES TO FIT IN AREAS OF PROPOSED CATCH BASINS AND MANHOLES WILL NOT BE PAID FOR SEPARATELY, BUT SHALL BE INCIDENTAL TO THE PROPOSED CATCH BASIN AND MANHOLE ITEMS.

5. ANY NECESSARY CUTTING OF EXISTING CATCH BASINS TO TAKE A PROPOSED PIPE WILL NOT BE PAID FOR SEPARATELY AND SHALL BE INCIDENTAL TO THE PROPOSED CULVERT ITEMS.

6. EXISTING CULVERTS TO REMAIN SHALL BE CLEANED AS DIRECTED BY THE ENGINEER. PAYMENT WILL BE MADE UNDER ITEM 631.32 CULVERT CLEANER (INCLUDING OPERATORS).

7. ALL NEW CATCH BASIN GRATES SHALL BE AS MANUFACTURED BY EJ COMPANY OF BROCKTON, MA.

8. ONE RED DELINEATOR POST SHALL BE INSTALLED AT ALL UNDERDRAIN AND STORM DRAIN OUTLETS.

Filename: 004_General Notes2.dgn

No.	Revision	By	Date

Scale:

Designed by: HNTB

CONSULTANT PROJECT MANAGER: R. Bruce Munger, P.E.

	By	Date		By	Date
Designed	CDH	08/15	Checked	RBM	08/15
Drawn	CDH	08/15	In Charge of	RAL	08/15

HNTB CORPORATION
340 County Road, Suite 6-C
Westbrook, ME 04092
TEL (207) 774-5155
FAX (207) 228-0909

MAINE TURNPIKE

THE GOLD STAR MEMORIAL HIGHWAY

MTA PROJECT MANAGER: William Yates

INTERCHANGES 32, 36, & 46 NB TOLL SYSTEM UPGRADES

GENERAL NOTES

SHEET NUMBER: GN-02

CONTRACT:2015.12

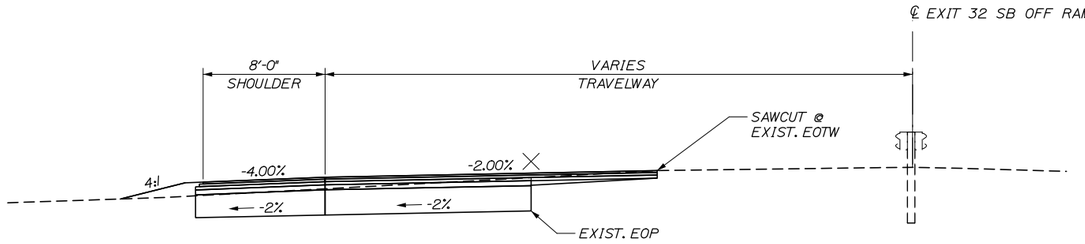

EXIT 32 SB OFF RAMP WIDENING

(STA. 214+00 LT TO STA. 215+52.37 LT)
1" = 5'

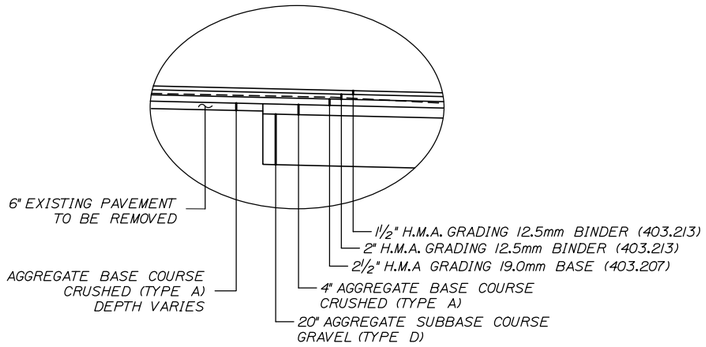

DETAIL AA
N.T.S.

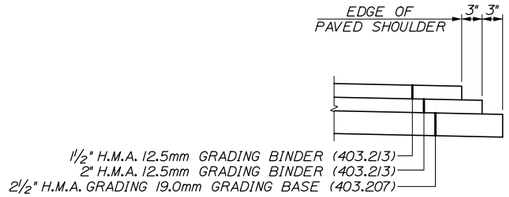

DETAIL BB
N.T.S.

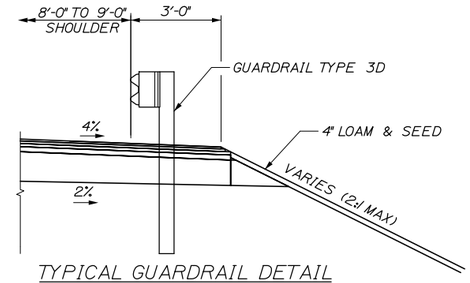

TYPICAL GUARDRAIL DETAIL
(STA. 212+54 LT TO STA. 213+43.50 LT)
(STA. 218+87.12 LT TO STA. 221+64.88 LT)
N.T.S.

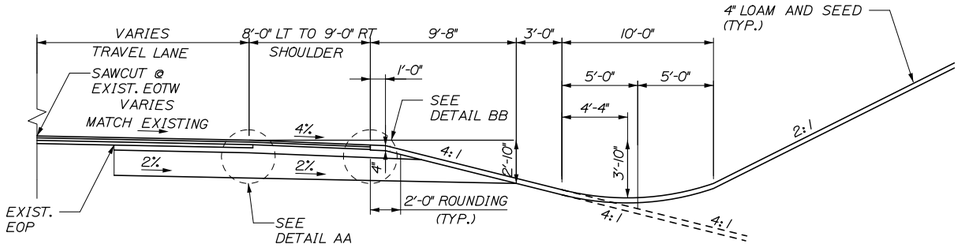

CROSS SLOPE EXTENSION DETAIL

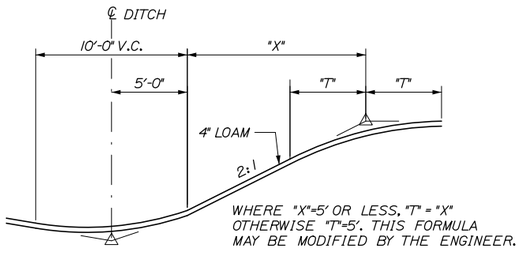

BACKSLOPE ROUNDING DETAIL
N.T.S.

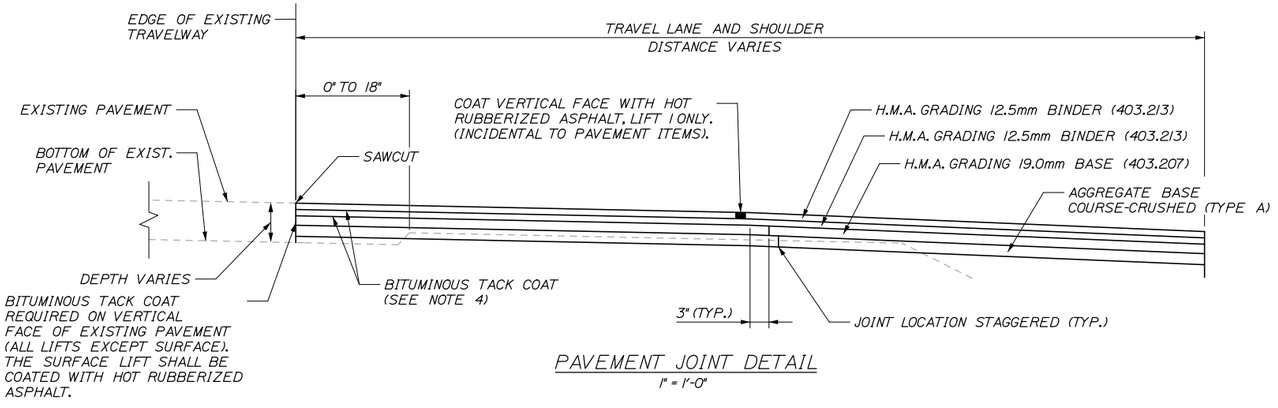

PAVEMENT JOINT DETAIL
1" = 1'-0"

GENERAL NOTES:

1. THE PAVEMENT, BASE AND SUBBASE DEPTHS AS SHOWN ON THE PLANS ARE INTENDED TO BE NOMINAL.

2. CROWNS FOR ALL COURSES OF SUBBASE AND PAVEMENT SHALL BE STRAIGHT.

3. ALL NECESSARY PAVEMENT CUTTING SHALL BE SAWCUT AND DONE IN SUCH A MANNER AS TO LEAVE A CLEAN, VERTICAL FACE.

4. BITUMINOUS TACK COAT IS REQUIRED BETWEEN ALL LIFTS OF PAVEMENT, OR AS DIRECTED BY RESIDENT. BITUMINOUS TACK COAT IS REQUIRED ON ALL EXISTING PAVED OR MILLED SURFACES PRIOR TO PLACING PROPOSED PAVEMENT.

5. HOT RUBBERIZED ASPHALT SHALL BE APPLIED TO ALL SAWCUT AND PAVEMENT JOINTS FOR THE SURFACE LAYER OF PAVEMENT PRIOR TO PAVING. BITUMINOUS TACK COAT SHALL BE APPLIED TO ALL SAWCUT AND PAVEMENT JOINTS FOR ALL OTHER PAVEMENT LAYERS PRIOR TO PAVING. PAYMENT SHALL BE INCIDENTAL TO THE PAVEMENT ITEMS.

6. THE CONTRACTOR WILL NOT BE PERMITTED TO GRIND OUT OR PLACE TEMPORARY PAINTED PAVEMENT MARKINGS ON FINAL SURFACE LIFT OF PAVEMENT. THE SURFACE LIFT SHALL BE PLACED AS THE FINAL CONSTRUCTION PHASE ONCE TEMPORARY CONCRETE BARRIER HAS BEEN REMOVED.

Date:9/5/2015

Filename: 005_Exit32_Typical Sections.dgn

Scale: AS NOTED

No.	Revision	By	Date

Designed by: HNTB

CONSULTANT PROJECT MANAGER: R. Bruce Munger, P.E.

	By	Date		By	Date
Designed	TJW	08/15	Checked	CDH	08/15
Drawn	TJW	08/15	In Charge of	RAL	08/15

HNTB CORPORATION
340 County Road, Suite 6-C
Westbrook, ME 04092
TEL (207) 774-5155
FAX (207) 228-0909

MAINE TURNPIKE

THE GOLD STAR MEMORIAL HIGHWAY

MTA PROJECT MANAGER: William Yates

INTERCHANGES 32, 36, & 46 NB
TOLL SYSTEM UPGRADES

INTERCHANGE 32
TYPICAL SECTIONS

SHEET NUMBER: TS-01

CONTRACT:2015.12

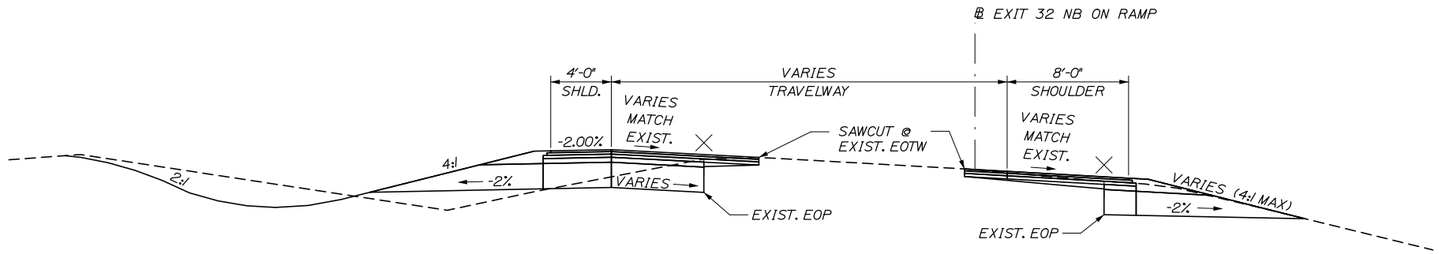

INTERCHANGE 32 NB ON RAMP WIDENING

(STA. 303+00 RT TO STA. 305+46 RT)
(STA. 304+00 LT TO STA. 308+16.81 LT)
1" = 5'

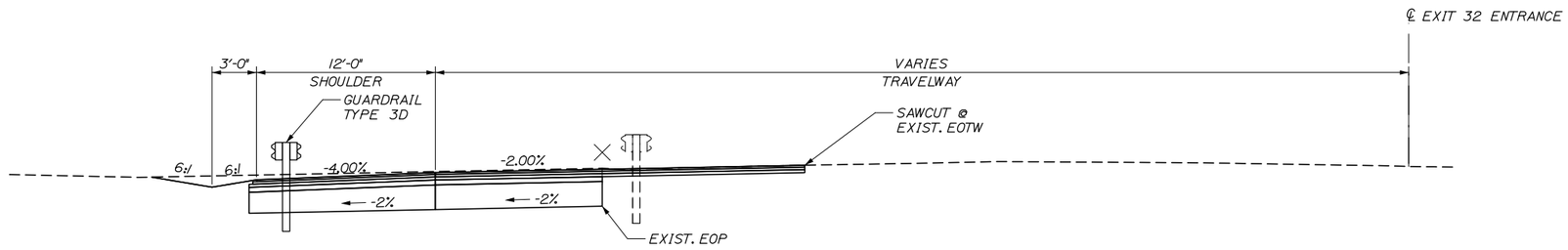

INTERCHANGE 32 ENTRANCE WIDENING

(STA. 219+50 LT TO STA. 221+00 LT)
1" = 5'

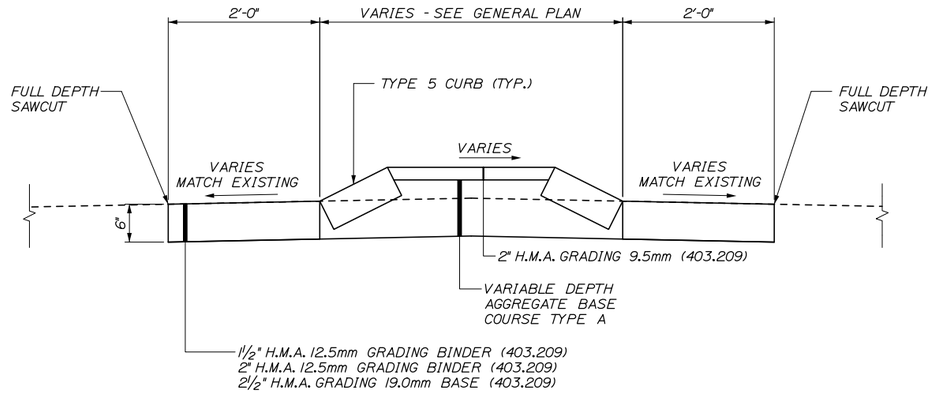

RAISED ISLAND DETAIL

(STA. 219+20.25 TO STA. 221+22.87)
1" = 5'

Date:9/5/2015

Filename: 006_Exit32_Typical Sections.dgn

Scale: AS NOTED

No.	Revision	By	Date

Designed by: HNTB

CONSULTANT PROJECT MANAGER: R. Bruce Munger, P.E.

	By	Date		By	Date
Designed	TJW	08/15	Checked	CDH	08/15
Drawn	TJW	08/15	In Charge of	RAL	08/15

HNTB CORPORATION
340 County Road, Suite 6-C
Westbrook, ME 04092
TEL (207) 774-5155
FAX (207) 228-0909

MAINE TURNPIKE

THE GOLD STAR MEMORIAL HIGHWAY

MTA PROJECT MANAGER: William Yates

INTERCHANGES 32, 36, & 46 NB TOLL SYSTEM UPGRADES

INTERCHANGE 32 TYPICAL SECTIONS

SHEET NUMBER: TS-02

CONTRACT:2015.12

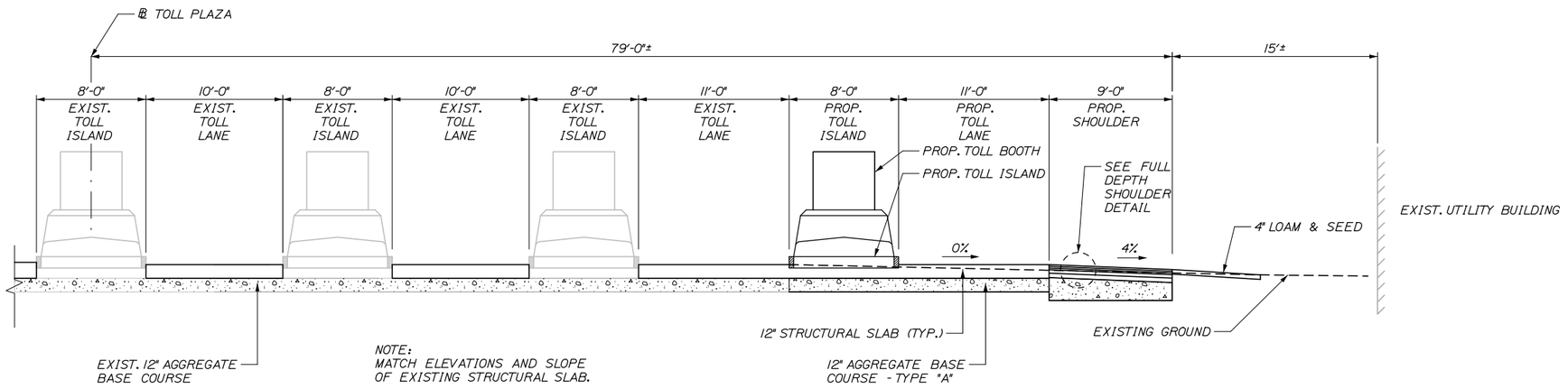

INTERCHANGE 32 TYPICAL SECTION

SCALE 1" = 5'

NOTES:

1. HOT RUBBERIZED ASPHALT SHALL BE APPLIED TO ALL SAWCUT AND PAVEMENT JOINTS FOR THE SURFACE LAYER OF PAVEMENT PRIOR TO PAVING. BITUMINOUS TACK COAT SHALL BE APPLIED TO ALL SAWCUT AND PAVEMENT JOINTS FOR ALL OTHER PAVEMENT LAYERS PRIOR TO PAVING. PAYMENT SHALL BE INCIDENTAL TO THE PAVEMENT ITEMS.

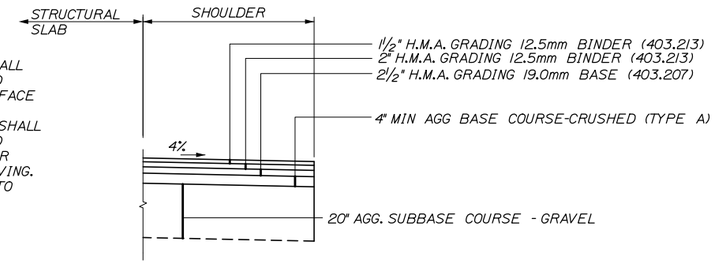

FULL DEPTH SHOULDER

N.T.S.

Date:9/5/2015

Filename: 007_Exit32_TypicalSections.dgn

Scale: AS NOTED				Designed by: HNTB					
No.	Revision	By	Date	CONSULTANT PROJECT MANAGER: R. Bruce Munger, P.E.					
					By	Date		By	Date
				Designed	TJW	08/15	Checked	CDH	08/15
				Drawn	TJW	08/15	In Charge of	RAL	08/15

HNTB CORPORATION
340 County Road, Suite 6-C
Westbrook, ME 04092
TEL (207) 774-5155
FAX (207) 228-0909

MAINE TURNPIKE

THE GOLD STAR MEMORIAL HIGHWAY

MTA PROJECT MANAGER: William Yates

INTERCHANGES 32, 36, & 46 NB
TOLL SYSTEM UPGRADES

INTERCHANGE 32
TYPICAL SECTIONS

SHEET NUMBER: TS-03

CONTRACT:2015.12

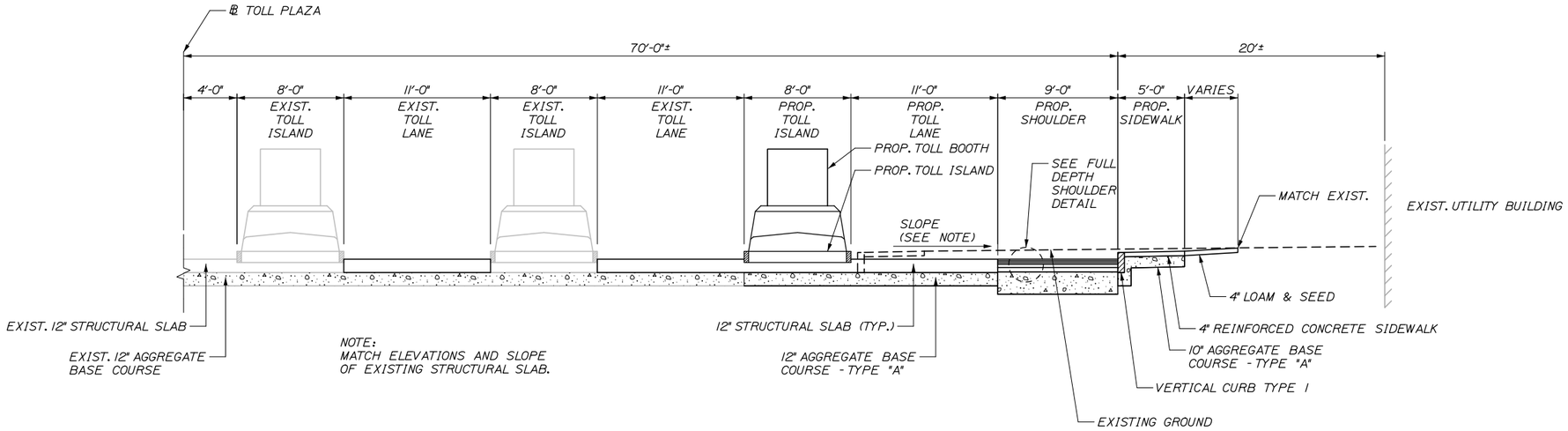

INTERCHANGE 46 NB TYPICAL SECTION

SCALE 1" = 5'

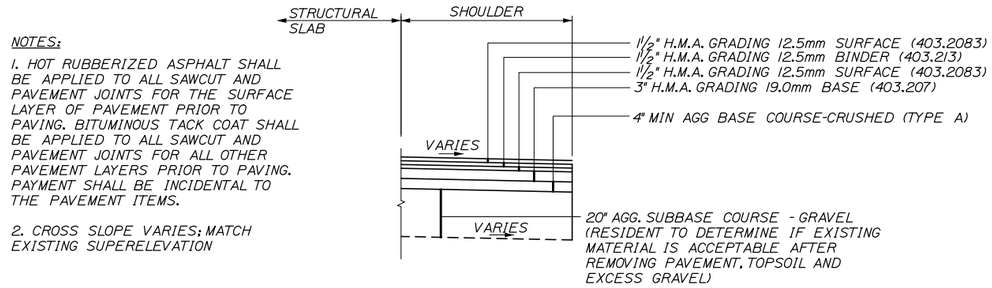

NOTES:

1. HOT RUBBERIZED ASPHALT SHALL BE APPLIED TO ALL SAWCUT AND PAVEMENT JOINTS FOR THE SURFACE LAYER OF PAVEMENT PRIOR TO PAVING. BITUMINOUS TACK COAT SHALL BE APPLIED TO ALL SAWCUT AND PAVEMENT JOINTS FOR ALL OTHER PAVEMENT LAYERS PRIOR TO PAVING. PAYMENT SHALL BE INCIDENTAL TO THE PAVEMENT ITEMS.

2. CROSS SLOPE VARIES; MATCH EXISTING SUPERELEVATION

FULL DEPTH SHOULDER

N.T.S.

Date:9/5/2015

Filename: 008_TypicalSection Exit 46NB.dgn

Scale: AS NOTED	Designed by: HNTB	HNTB CORPORATION 340 County Road, Suite 6-C Westbrook, ME 04092 TEL (207) 774-5155 FAX (207) 228-0909	MAINE TURNPIKE THE GOLD STAR MEMORIAL HIGHWAY MTA PROJECT MANAGER: William Yates	INTERCHANGES 32, 36, & 46 NB TOLL SYSTEM UPGRADES INTERCHANGE 46 NB TYPICAL SECTIONS SHEET NUMBER: TS-04 CONTRACT:2015.12 8 OF 118

No.	Revision	By	Date

CONSULTANT PROJECT MANAGER: R. Bruce Munger, P.E.

	By	Date		By	Date
Designed	TJW	08/15	Checked	CDH	08/15
Drawn	TJW	08/15	In Charge of	RAL	08/15

NOTES:

1. THE ACCESS ROAD TO THE EMPLOYEE PARKING LOT SHALL REMAIN CLEAN AT ALL TIMES.

2. ALL SIGNS DESIGNATED WITH A * SHALL BE POST MOUNTED IN PHASE IA AND SHALL REMAIN IN ALL OTHER PHASES. ALL POST MOUNTED SIGNS NOT IN USE SHALL BE COVERED OR REMOVED AS DIRECTED BY THE RESIDENT.

3. INSTALL ROAD WORK AHEAD SIGNS AT THE START OF THE EXIT RAMPS. FINAL LOCATION OF THE ROAD WORK AHEAD SIGNS SHALL BE APPROVED BY THE RESIDENT.

ROAD WORK AHEAD *W20-1 (SEE NOTE 3)

END ROAD WORK *G20-2

DRUMS @ 20' ON CENTER

NORTHBOUND ON RAMP

DRUMS @ 10' ON CENTER (TYP.)

MAINTAIN PARKING FOR TURNPIKE EMPLOYEES

CONTRACTOR SHALL MAINTAIN EMPLOYEE ACCESS

CONTRACTOR'S AREA FOR LAYDOWN

FIELD OFFICE TYPE B

TRUCKS ENTERING CS-10

WORK ZONE

LANE 7
LANE 5
LANE 4
LANE 3
LANE 2
LANE 1
LANE 6

DRUMS @ 20' ON CENTER

SOUTHBOUND ON RAMP
SOUTHBOUND OFF RAMP

NORTHBOUND OFF RAMP

ROAD WORK AHEAD *W20-1 (SEE NOTE 3)

PHASE IA - LANE 7 WITH SHOULDER WIDENING

ROAD WORK AHEAD *W20-1

500'

END ROAD WORK *G20-2

ALFRED STREET

BIDDEFORD CONNECTOR

Date:9/5/2015

Filename: 009_Exit32_MOT_Ph1A_Approach Highway.dgn

Scale: 25 0 25 50

No.	Revision	By	Date

Designed by: HNTB

CONSULTANT PROJECT MANAGER: R. Bruce Munger, P.E.

	By	Date		By	Date
Designed	JRD	08/15	Checked	CDH	08/15
Drawn	PMK	08/15	In Charge of	RAL	08/15

HNTB CORPORATION
340 County Road, Suite 6-C
Westbrook, ME 04092
TEL (207) 774-5155
FAX (207) 228-0909

MAINE TURNPIKE

THE GOLD STAR MEMORIAL HIGHWAY

MTA PROJECT MANAGER: William Yates

INTERCHANGES 32, 36, & 46 NB TOLL SYSTEM UPGRADES

INTERCHANGE 32 PHASE 1A MAINTENANCE OF TRAFFIC PLAN

SHEET NUMBER: MT-01

CONTRACT:2015.12

Date:9/5/2015

NOTES:

1. FINAL PAVEMENT MARKINGS FOR THE NB AND SB ON RAMPS SHALL BE INSTALLED PRIOR TO MOVING TO PHASE 3. SEE INTERCHANGE 32 SIGNING AND STRIPING PLANS FOR FINAL STRIPING LAYOUT.

2. CONSTRUCTION VEHICLES SHALL USE THE ON RAMPS TO ENTER THE TURNPIKE MAINLINE. ENTERING THE TURNPIKE MAINLINE FROM THE WORK ZONE IS PROHIBITED.

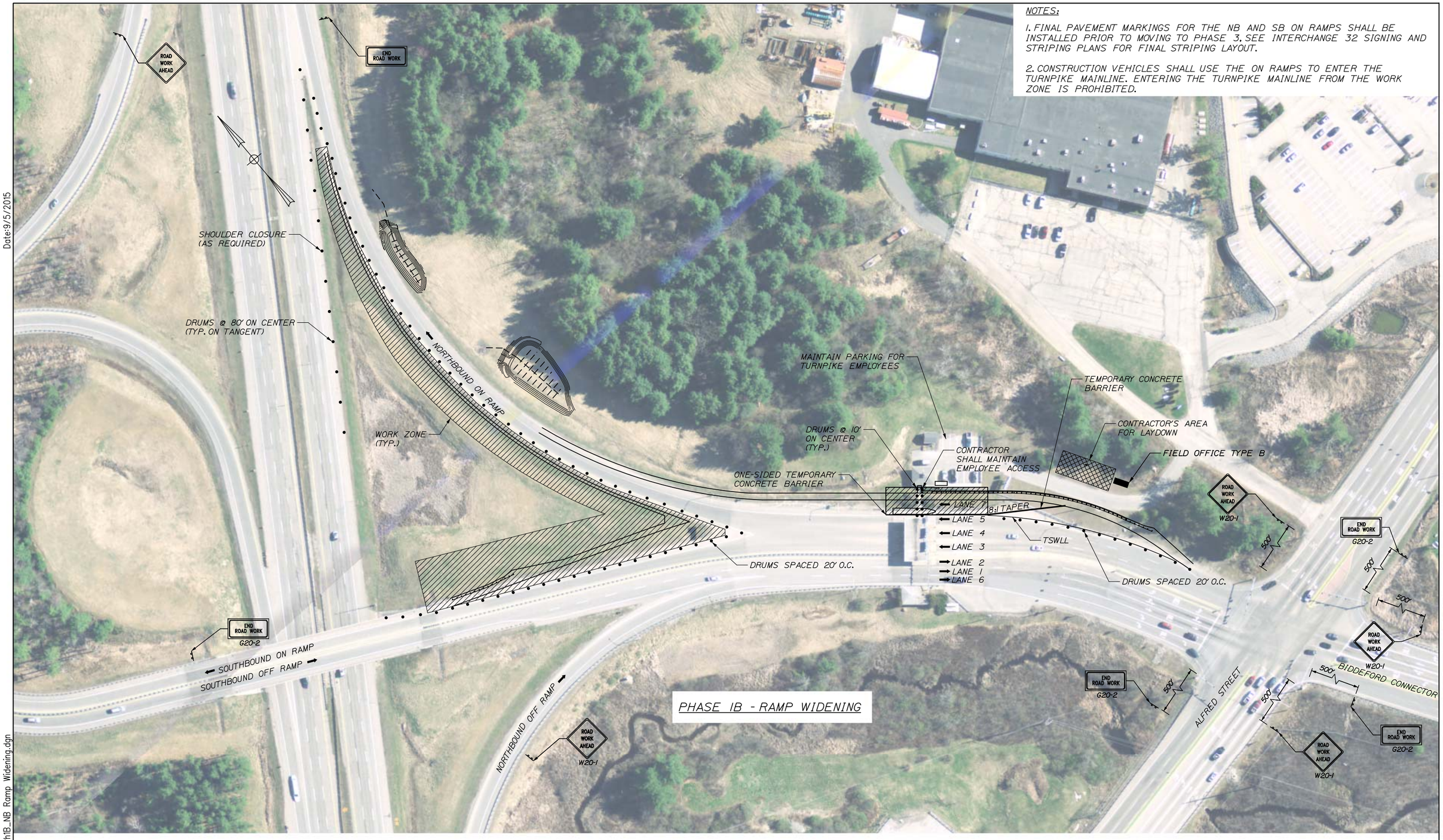

Filename: 010_Exit32_MOT_Ph1B_NB Ramp Widening.dgn

Scale: 25 0 25 50

No.	Revision	By	Date

Designed by: HNTB

CONSULTANT PROJECT MANAGER: R. Bruce Munger, P.E.

	By	Date		By	Date
Designed	JRD	08/15	Checked	CDH	08/15
Drawn	PMK	08/15	In Charge of	RAL	08/15

HNTB CORPORATION
340 County Road, Suite 6-C
Westbrook, ME 04092
TEL (207) 774-5155
FAX (207) 228-0909

MAINE TURNPIKE

THE GOLD STAR MEMORIAL HIGHWAY

MTA PROJECT MANAGER: William Yates

INTERCHANGES 32, 36, & 46 NB TOLL SYSTEM UPGRADES

INTERCHANGE 32 PHASE 1B MAINTENANCE OF TRAFFIC

SHEET NUMBER: MT-02

CONTRACT:2015.12

Date:9/5/2015

NOTES:

1. THE CONTRACTOR SHALL SAWCUT AND REMOVE A 2' WIDE SECTION OF PAVEMENT AROUND THE REMOVED GUARDRAIL PRIOR TO STARTING PHASE 2 WORK. THIS AREA SHALL RE-PAVED WITH FULL DEPTH PAVEMENT. GUARDRAIL SHALL BE RESET IN THE PROPOSED LOCATION AFTER PHASE 3 CONSTRUCTION IS COMPLETE. PAYMENT FOR THIS WORK SHALL BE MADE UNDER THE RESPECTIVE 403 AND 606 ITEMS. SEE SHEET GP32-02.

2. REGULATORY WORK ZONE SPEED LIMIT SIGNAGE SHALL BE PLACED ON NORTHBOUND AND SOUTHBOUND OFF RAMPS DURING EXIT LANE CONSTRUCTION. SEE SHEET MT-12 FOR MORE INFORMATION.

ROAD WORK AHEAD
END ROAD WORK
NORTHBOUND ON RAMP
CS-85
NO TOLL
DO NOT STOP
SP-7
DRUMS @ 10' ON CENTER (TYP.)
MAINTAIN PARKING FOR TURNPIKE EMPLOYEES
CONTRACTOR'S AREA FOR LAYDOWN
FIELD OFFICE TYPE B
TEMPORARY CONCRETE BARRIER
LANE 3 SIGNAGE TO BE MOUNTED ON CANOPY
CONTRACTOR SHALL MAINTAIN EMPLOYEE ACCESS
TL-3 WORK ZONE CRASH CUSHION
REMOVE AND RESET GUARDRAIL - PATCH PAVEMENT (SEE NOTE 1)
LANE 7
LANE 5
LANE 4
LANE 3
LANE 6
50' OVERLAP
TSYEL
TSWEL
TSWEL
WORK ZONE
4:1 TAPER
TL-2 WORK ZONE CRASH CUSHION (TYP.)
SOUTHBOUND ON RAMP
SOUTHBOUND OFF RAMP
G20-2
USE BOTH LANES
CS-20
W4-1
100'
W3-2a
YIELD
RI-2
W12-1
NORTHBOUND OFF RAMP
W20-1
500'
BIDDEFORD CONNECTOR
ALFRED STREET

PHASE 2 - LANES 1 AND 2

Scale: 25 0 25 50

No.	Revision	By	Date

Designed by: HNTB

CONSULTANT PROJECT MANAGER: R. Bruce Munger, P.E.

	By	Date		By	Date
Designed	JRD	08/15	Checked	CDH	08/15
Drawn	PMK	08/15	In Charge of	RAL	08/15

HNTB CORPORATION
340 County Road, Suite 6-C
Westbrook, ME 04092
TEL (207) 774-5155
FAX (207) 228-0909

MAINE TURNPIKE

THE GOLD STAR MEMORIAL HIGHWAY

MTA PROJECT MANAGER: William Yates

INTERCHANGES 32, 36, & 46 NB TOLL SYSTEM UPGRADES

INTERCHANGE 32 PHASE 2 MAINTENANCE OF TRAFFIC PLAN

SHEET NUMBER: MT-03

CONTRACT:2015.12

Filename: 011_Exit32_MOT_Ph2_Exiting Lanes 1-2.dgn

NOTES:

1. REGULATORY WORK ZONE SPEED LIMIT SIGNAGE SHALL BE PLACED ON NORTHBOUND AND SOUTHBOUND OFF RAMPS DURING EXIT LANE CONSTRUCTION. SEE SHEET MT-12 FOR MORE INFORMATION.

ROAD WORK AHEAD

END ROAD WORK

NORTHBOUND ON RAMP

CS-85 NO TOLL

DO NOT STOP

SP-7

LANE 3 SIGNAGE TO BE MOUNTED ON CANOPY

DRUMS @ 10' ON CENTER (TYP.)

MAINTAIN PARKING FOR TURNPIKE EMPLOYEES

CONTRACTOR SHALL MAINTAIN EMPLOYEE ACCESS

CONTRACTOR'S AREA FOR LAYDOWN

FIELD OFFICE TYPE B

TEMPORARY DELINEATORS 10' ON CENTER

BARRIER

TSWLL

LANE 7
LANE 5
LANE 4
LANE 3
LANE 2
LANE 1
LANE 6

TSYEL

TL-2 WORK ZONE CRASH CUSHION

4:1 TAPER

WORK ZONE

TSWEL

TL-3 WORK ZONE CRASH CUSHION

WI2-1

SOUTHBOUND ON RAMP

SOUTHBOUND OFF RAMP

G20-2

USE BOTH LANES

CS-20

W4-1

100'

YIELD

RI-2

W3-2a

NORTHBOUND OFF RAMP

W20-1

500'

BIDDEFORD CONNECTOR

ALFRED STREET

PHASE 3 - LANES 1 AND 6

Date:9/5/2015

Filename: 012_Exit32_MOT_Ph3_Exiting Lanes 1-6.dgn

Scale: 25 0 25 50

No.	Revision	By	Date

Designed by: HNTB

CONSULTANT PROJECT MANAGER: R. Bruce Munger, P.E.

	By	Date		By	Date
Designed	JRD	08/15	Checked	RBM	08/15
Drawn	PMK	08/15	In Charge of	RAL	08/15

HNTB CORPORATION
340 County Road, Suite 6-C
Westbrook, ME 04092
TEL (207) 774-5155
FAX (207) 228-0909

MAINE TURNPIKE

THE GOLD STAR MEMORIAL HIGHWAY

MTA PROJECT MANAGER: William Yates

INTERCHANGES 32, 36, & 46 NB TOLL SYSTEM UPGRADES

INTERCHANGE 32 PHASE 3 MAINTENANCE OF TRAFFIC PLAN

SHEET NUMBER: MT-04

CONTRACT:2015.12

NOTES:

1. TRAFFIC CONTROL SETUP OF LANES 3 AND 4 SHALL BE SIMILAR TO LANE 5.

ROAD WORK AHEAD

END ROAD WORK

NORTHBOUND ON RAMP

DRUMS TO BLOCK MTA EMPLOYEES FROM ACCESSING WORK ZONE

MAINTAIN PARKING FOR TURNPIKE EMPLOYEES

CONTRACTOR SHALL MAINTAIN ACCESS AT ALL ACTIVE TOLL BOOTHS FOR MTA EMPLOYEES AND PLACE DRUMS TO BLOCK MTA EMPLOYEES FROM ACCESSING THE WORK ZONE

CONTRACTOR'S AREA FOR ACCESS

FIELD OFFICE TYPE B

DRUMS @ 10' ON CENTER

LANE 7

LANE 5

LANE 4

LANE 3

LANE 2

LANE 1

LANE 6

WORK ZONE

DRUMS @ 20' O.C.

CONTRACTOR SHALL RESET RAIL BEFORE PHASE 4 CONSTRUCTION STARTS. SEE SHEET GP32-02.

LANE CLOSED W20-5

MEDIAN ISLAND TO BE CONSTRUCTED DURING LANE 3

SIGN MOUNTED ON TYPE III BARRICADE

W20-1

G20-2

500'

SOUTHBOUND ON RAMP

SOUTHBOUND OFF RAMP

NORTHBOUND OFF RAMP

BIDDEFORD CONNECTOR

ALFRED STREET

PHASE 4 - LANES 3, 4, AND 5

(LANE 5 SHOWN - LANES 3 AND 4 SIMILAR)

Date:9/5/2015

Filename: 013_Exit32_MOT_Ph4_Interior Lanes.dgn

Scale: 25 0 25 50

No.	Revision	By	Date

Designed by: HNTB

CONSULTANT PROJECT MANAGER: R. Bruce Munger, P.E.

	By	Date		By	Date
Designed	JRD	08/15	Checked	CDH	08/15
Drawn	PMK	08/15	In Charge of	RAL	08/15

HNTB CORPORATION
340 County Road, Suite 6-C
Westbrook, ME 04092
TEL (207) 774-5155
FAX (207) 228-0909

MAINE TURNPIKE

THE GOLD STAR MEMORIAL HIGHWAY

MTA PROJECT MANAGER: William Yates

INTERCHANGES 32, 36, & 46 NB TOLL SYSTEM UPGRADES

INTERCHANGE 32 PHASE 4 MAINTENANCE OF TRAFFIC PLAN

SHEET NUMBER: MT-05

CONTRACT:2015.12

Date:9/5/2015

NOTES:

1. ALL SIGNS DESIGNATED WITH A * SHALL BE POST MOUNTED IN PHASE 1 AND SHALL REMAIN IN PLACE FOR THE REMAINDER OF THE PROJECT. ALL POST MOUNTED SIGNS NOT IN USE SHALL BE COVERED OR REMOVED AS DIRECTED BY THE RESIDENT.

2. INSTALL ROAD WORK AHEAD SIGNS AT THE START OF THE EXIT RAMPS. FINAL LOCATION OF THE ROAD WORK AHEAD SIGNS SHALL BE APPROVED BY THE RESIDENT.

3. TRAFFIC CONTROL SETUP OF LANES 3 AND 4 SHALL BE SIMILAR TO LANE 5.

PHASE 1 - LANES 3, 4, AND 5
(LANE 5 SHOWN - LANES 3 AND 4 SIMILAR)

Scale: 50 0 50 100

No.	Revision	By	Date

Designed by: HNTB

CONSULTANT PROJECT MANAGER: R. Bruce Munger, P.E.

	By	Date		By	Date
Designed	JRD	08/15	Checked	CDH	08/15
Drawn	PMK	08/15	In Charge of	RAL	08/15

HNTB CORPORATION
340 County Road, Suite 6-C
Westbrook, ME 04092
TEL (207) 774-5155
FAX (207) 228-0909

MAINE TURNPIKE

THE GOLD STAR MEMORIAL HIGHWAY

MTA PROJECT MANAGER: William Yates

INTERCHANGES 32, 36, & 46 NB TOLL SYSTEM UPGRADES

INTERCHANGE 36 PHASE 1 MAINTENANCE OF TRAFFIC PLAN

SHEET NUMBER: MT-06

CONTRACT:2015.12

Filename: 014_Exit36_MOT_Ph1_Interior Lanes.dgn

Date:9/5/2015

NOTES:

1. THE CONTRACTOR SHALL INSTALL SIGN CS-85 ON THE CANOPY OVER LANE 3. THE CONTRACTOR SHALL ALSO RELOCATE THE EXISTING SIGNAL HEAD FROM THE MAST ARM OVER LANE 1 TO THE CANOPY OVER LANE 3. ALL WORK ASSOCIATED WITH THE RELOCATION OF THE SIGNAL HEAD SHALL BE CONSIDERED INCIDENTAL TO THE 643.712 ITEM.

2. THE CONTRACTOR SHALL SAWCUT AND REMOVE A 2' WIDE SECTION OF PAVEMENT AROUND THE REMOVED CAT 350 END TREATMENT PRIOR TO STARTING PHASE 2 WORK. THIS AREA SHALL RE-PAVED WITH FULL DEPTH PAVEMENT. THE CAT 350 END TREATMENT SHALL BE RESET IN THE PROPOSED LOCATION AFTER PHASE 3 CONSTRUCTION IS COMPLETE. PAYMENT FOR THIS WORK SHALL BE MADE UNDER THE RESPECTIVE 403 AND 606 ITEMS. SEE SHEET GP36-01.

3. REGULATORY WORK ZONE SPEED LIMIT SIGNAGE SHALL BE PLACED ON NORTHBOUND AND SOUTHBOUND RAMPS DURING EXIT LANE CONSTRUCTION. SEE SHEET MT-12 FOR MORE INFORMATION.

4. GRAVEL SHALL BE ADDED 3' MINIMUM ADJACENT TO THE JOGGED SECTION OF SLAB TO MATCH EXISTING ROADWAY GRADE. PAYMENT SHALL BE CONSIDERED INCIDENTAL IN THE 652 ITEMS.

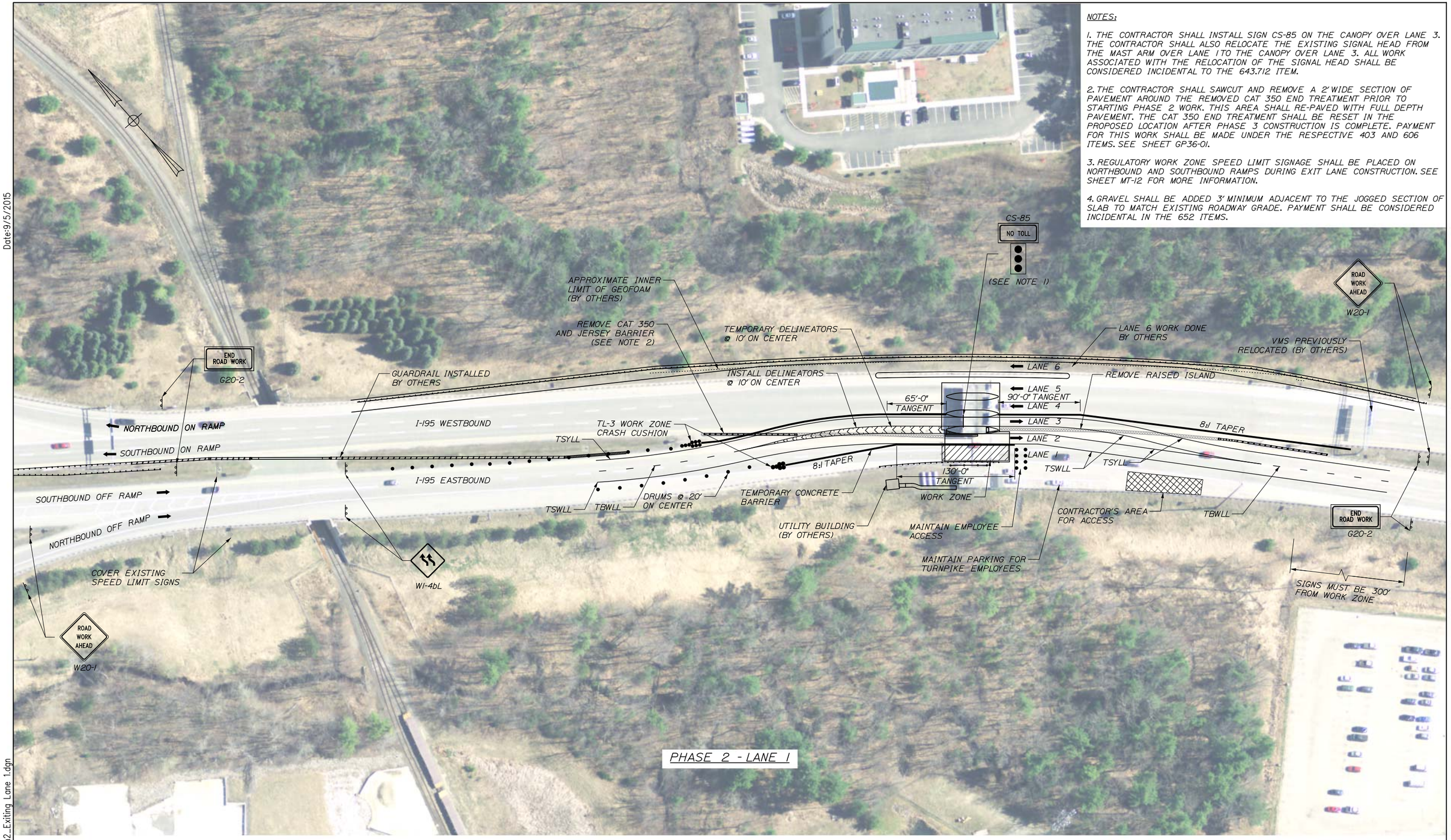

Filename: 015_Exit36_MOT_Ph2_Exiting Lane 1.dgn

Scale: 50 0 50 100

No.	Revision	By	Date

Designed by: HNTB

CONSULTANT PROJECT MANAGER: R. Bruce Munger, P.E.

	By	Date		By	Date
Designed	JRD	08/15	Checked	CDH	08/15
Drawn	PMK	08/15	In Charge of	RAL	08/15

HNTB CORPORATION
340 County Road, Suite 6-C
Westbrook, ME 04092
TEL (207) 774-5155
FAX (207) 228-0909

MAINE TURNPIKE

THE GOLD STAR MEMORIAL HIGHWAY

MTA PROJECT MANAGER: William Yates

INTERCHANGES 32, 36, & 46 NB TOLL SYSTEM UPGRADES

INTERCHANGE 36 PHASE 2 MAINTENANCE OF TRAFFIC PLAN

SHEET NUMBER: MT-07

CONTRACT:2015.12

Date:9/5/2015

NOTES:

1. THE CONTRACTOR SHALL RELOCATE THE EXISTING SIGNAL OVER LANE 2 TO OVER LANE 3. ALL WORK ASSOCIATED WITH THE RELOCATION OF THE SIGNAL HEAD SHALL BE CONSIDERED INCIDENTAL TO THE 643.712 ITEM.

2. REGULATORY WORK ZONE SPEED LIMIT SIGNAGE SHALL BE PLACED ON NORTHBOUND AND SOUTHBOUND RAMPS DURING EXIT LANE CONSTRUCTION. SEE SHEET MT-12 FOR MORE INFORMATION.

PHASE 3 - EXITING LANE 2

Filename: 016_Exit36_MOT_Ph3_Exiting Lane 2.dgn

Scale: 50 0 50 100

No.	Revision	By	Date

Designed by: HNTB

CONSULTANT PROJECT MANAGER: R. Bruce Munger, P.E.

	By	Date		By	Date
Designed	JRD	08/15	Checked	CDH	08/15
Drawn	PMK	08/15	In Charge of	RAL	08/15

HNTB CORPORATION
340 County Road, Suite 6-C
Westbrook, ME 04092
TEL (207) 774-5155
FAX (207) 228-0909

MAINE TURNPIKE

THE GOLD STAR MEMORIAL HIGHWAY

MTA PROJECT MANAGER: William Yates

INTERCHANGES 32, 36, & 46 NB TOLL SYSTEM UPGRADES

INTERCHANGE 36 PHASE 3 MAINTENANCE OF TRAFFIC PLAN

SHEET NUMBER: MT-08

CONTRACT:2015.12

Date:9/5/2015

NOTES:

1. ALL SIGNS DESIGNATED WITH A * SHALL BE POST MOUNTED IN PHASE 1 AND SHALL REMAIN IN PLACE FOR THE REMAINDER OF THE PROJECT. ALL POST MOUNTED SIGNS NOT IN USE SHALL BE COVERED OR REMOVED AS DIRECTED BY THE RESIDENT.

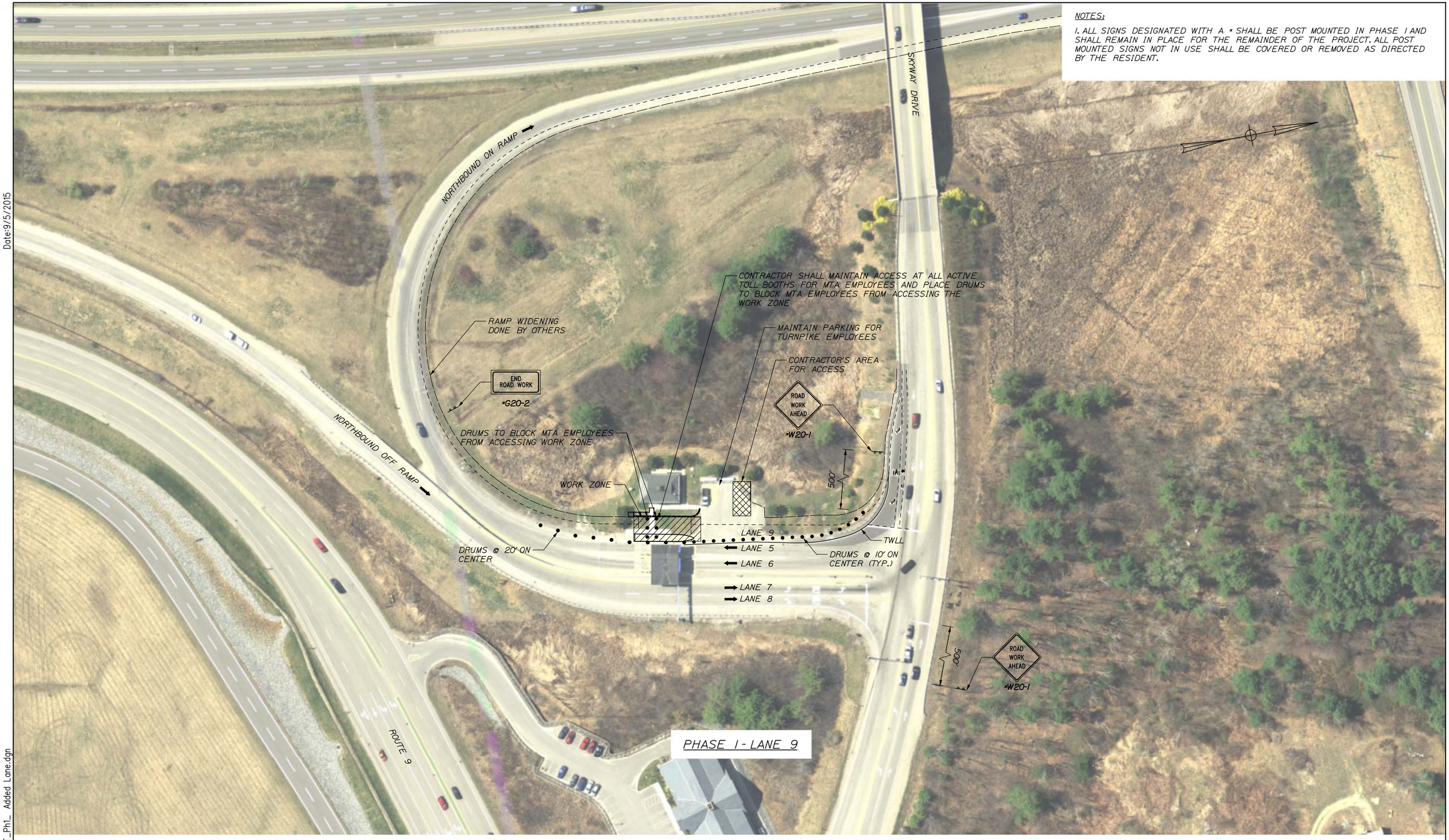

PHASE 1 - LANE 9

Filename: 017_Exit46 NB_MOT_Ph1_ Added Lane.dgn

Scale: 50 0 50 100

No.	Revision	By	Date

Designed by: HNTB

CONSULTANT PROJECT MANAGER: R. Bruce Munger, P.E.

	By	Date		By	Date
Designed	JRD	08/15	Checked	CDH	08/15
Drawn	PMK	08/15	In Charge of	RAL	08/15

HNTB CORPORATION
340 County Road, Suite 6-C
Westbrook, ME 04092
TEL (207) 774-5155
FAX (207) 228-0909

MAINE TURNPIKE

THE GOLD STAR MEMORIAL HIGHWAY

MTA PROJECT MANAGER: William Yates

INTERCHANGES 32, 36, & 46 NB TOLL SYSTEM UPGRADES

INTERCHANGE 46 NB PHASE 1 MAINTENANCE OF TRAFFIC PLAN

SHEET NUMBER: MT-09

CONTRACT:2015.12

Date:9/5/2015

NOTES:

1. TRAFFIC CONTROL SETUP OF LANE 6 SHALL BE SIMILAR TO LANE 5.

PHASE 2 - LANES 5 AND 6

(LANE 5 SHOWN - LANE 6 SIMILAR)

Filename: 018_Exit46 NB_MOT_Ph2_ Interior Lanes.dgn

Scale: 50 0 50 100

No.	Revision	By	Date

Designed by: HNTB

CONSULTANT PROJECT MANAGER: R. Bruce Munger, P.E.

	By	Date		By	Date
Designed	JRD	08/15	Checked	CDH	08/15
Drawn	PMK	08/15	In Charge of	RAL	08/15

HNTB CORPORATION
340 County Road, Suite 6-C
Westbrook, ME 04092
TEL (207) 774-5155
FAX (207) 228-0909

MAINE TURNPIKE

THE GOLD STAR MEMORIAL HIGHWAY

MTA PROJECT MANAGER: William Yates

INTERCHANGES 32, 36, & 46 NB TOLL SYSTEM UPGRADES

INTERCHANGE 46 NB PHASE 2 MAINTENANCE OF TRAFFIC PLAN

SHEET NUMBER: MT-10

CONTRACT:2015.12

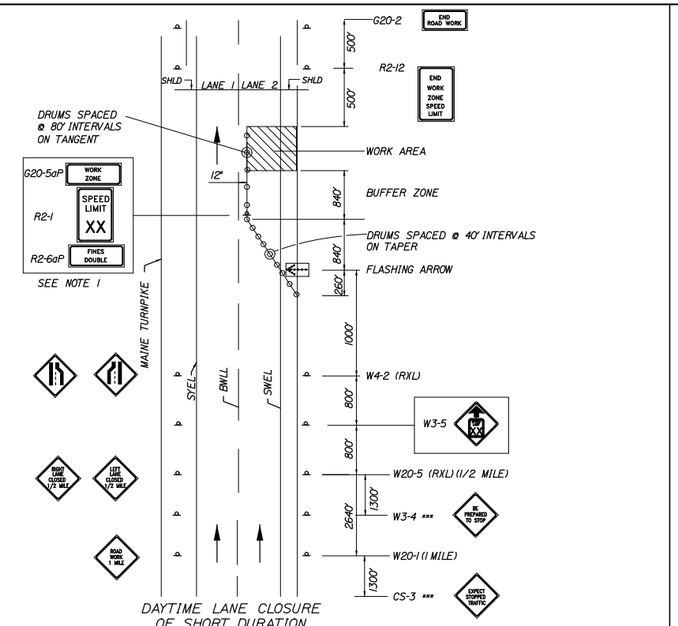

DAYTIME LANE CLOSURE OF SHORT DURATION (MAINLINE)

SINGLE LANE CLOSURE SIGNS ON EASELS

1. FOR EASEL SET UP ONLY, THIS SIGN IS NOT BRACKETED. ONE SIGN ASSEMBLY IS PLACED AT THE END OF THE TAPER .

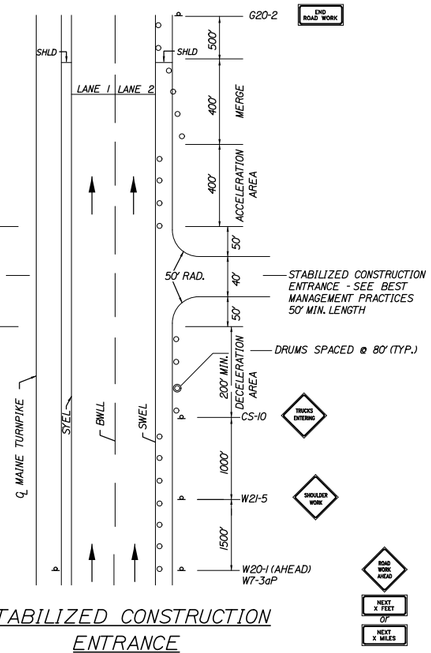

STABILIZED CONSTRUCTION ENTRANCE

1. SIGN G20-2 IS NOT REQUIRED IF ENTRANCE IS WITHIN THE WORK ZONE.

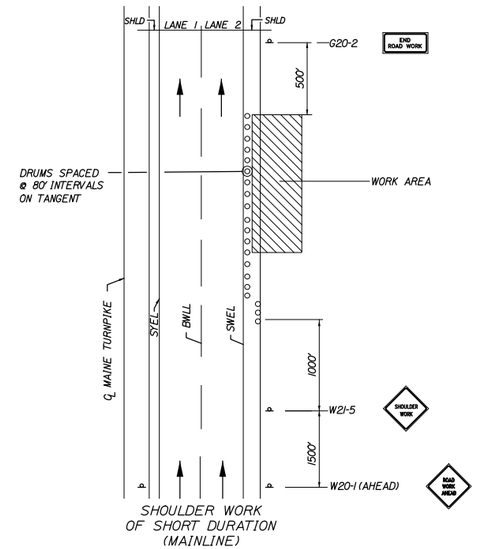

SHOULDER WORK OF SHORT DURATION (MAINLINE)

SHOULDER WORK

1. THE W20-1 AND G20-2 SIGNS ARE NOT REQUIRED IF THE SHOULDER CLOSURE IS WITHIN A PREVIOUSLY ESTABLISHED WORK ZONE.

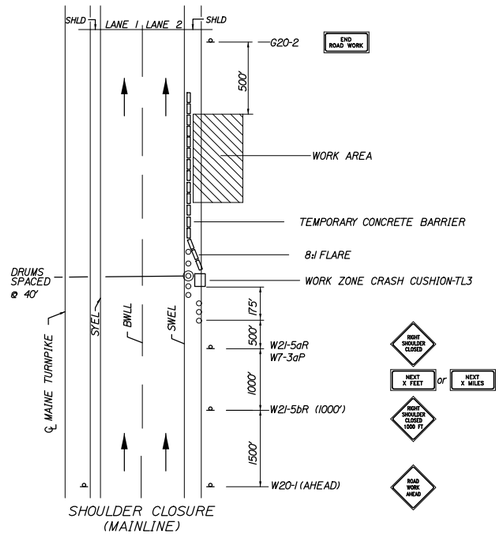

SHOULDER CLOSURE (MAINLINE)

SHOULDER CLOSURE

1. THE W20-1 AND G20-2 SIGNS ARE NOT REQUIRED IF THE SHOULDER CLOSURE IS WITHIN A PREVIOUSLY ESTABLISHED WORK ZONE.

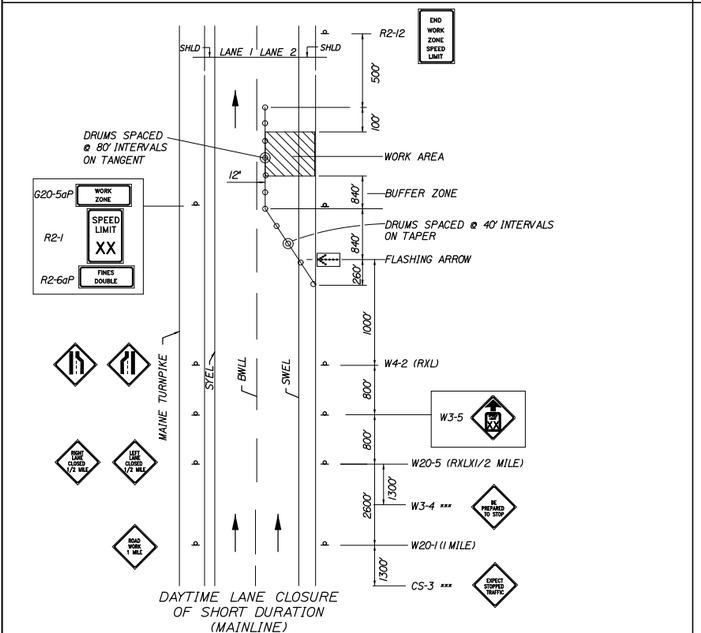

DAYTIME LANE CLOSURE OF SHORT DURATION (MAINLINE)

SINGLE LANE CLOSURE - POST MOUNTED SIGN SETUP

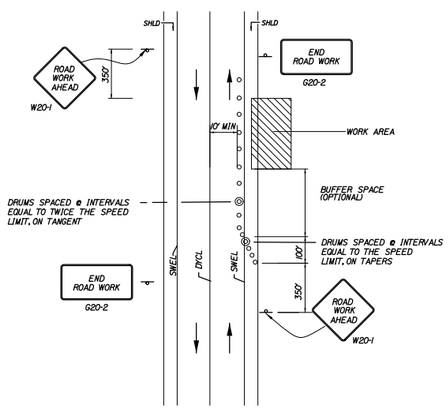

TEMP. LOCAL ROAD SHOULDER CLOSURE

1. FOR SHORT DURATION WORK (<1 HOUR), THE TAPER AND CHANNELIZATION DEVICES MAY BE OMITTED IF SHADOW VEHICLE IS PRESENT WITH ACTIVATED HIGH-INTENSITY ROTATING, FLASHING, OSCILLATING OR STROBE LIGHTS.

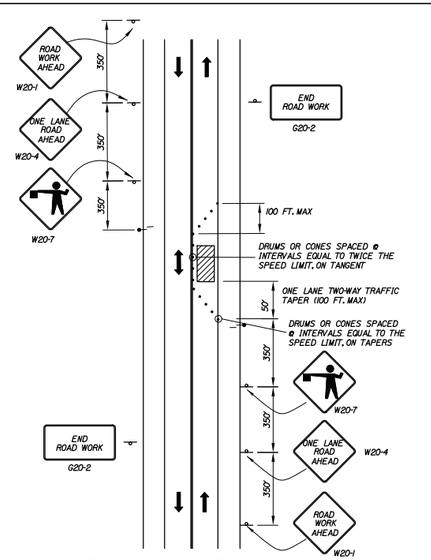

LOCAL ROAD SINGLE LANE CLOSURE

1. ROAD WORK AHEAD & END ROAD WORK SIGNS MAY BE OMITTED FOR SHORT DURATION OPERATIONS (LESS THAN 1 HOUR).
2. FLAGGERS SHALL BE LOCATED SO THEY ARE CLEARLY VISIBLE TO APPROACHING DRIVERS.
3. SIGN SPACING ASSUMES LOCAL ROAD SPEED IS 40 MPH OR LESS.

ABBREVIATIONS FOR ALL M.O.T. PLANS

BWLL = BROKEN WHITE LANE LINE
SWEL = SOLID WHITE EDGE LINE
SYEL = SOLID YELLOW EDGE LINE
TBWLL - TEMPORARY BROKEN WHITE LANE LINE
TSWEL = TEMPORARY SOLID WHITE EDGE LINE
TSYEL = TEMPORARY SOLID YELLOW EDGE LINE

GENERAL NOTES

1. FOR SIGN DETAILS, SEE MAINTENANCE OF TRAFFIC SIGN SUMMARY SHEETS.
2. "TRUCKS ENTERING" SIGN SHALL ALSO BE USED AT LOCATIONS WHERE TRUCKS ENTER THE WORK ZONE FROM THE TRAVEL LANE.
3. SIGNS DESIGNATED WITH *** SHALL BE USED DURING STOPPAGES OF TRAFFIC.
4. TRUCK MOUNTED ATTENUATOR SHALL NOT BE LOCATED WITHIN THE BUFFER ZONE.

Date:9/5/2015

Filename: 019_MOTDetails.dgn

Scale: N.T.S.	Designed by: HNTB

No.	Revision	By	Date

CONSULTANT PROJECT MANAGER: R. Bruce Munger, P.E.

	By	Date		By	Date
Designed	TMH	08/15	Checked	HME	08/15
Drawn	PMK	08/15	In Charge of	RAL	08/15

HNTB CORPORATION
340 County Road, Suite 6-C
Westbrook, ME 04092
TEL (207) 774-5155
FAX (207) 228-0909

MAINE TURNPIKE

THE GOLD STAR MEMORIAL HIGHWAY

MTA PROJECT MANAGER: William Yates

INTERCHANGES 32, 36, & 46 NB TOLL SYSTEM UPGRADES

MAINTENANCE OF TRAFFIC DETAILS

SHEET NUMBER: MT-11

CONTRACT:2015.12

Date:9/5/2015

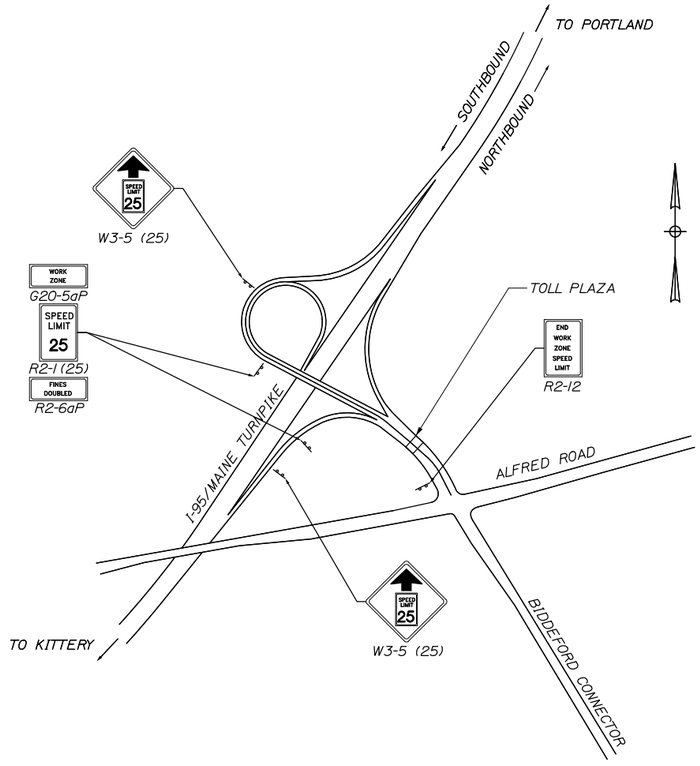

INTERCHANGE 32
BIDDEFORD
PHASES 2 & 3
SCALE 1" =500'

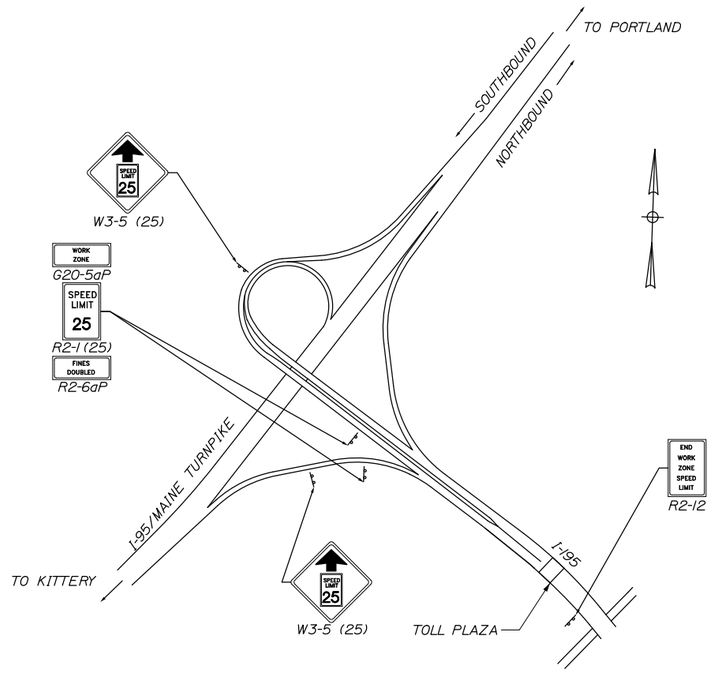

INTERCHANGE 36
SACO
PHASES 2 & 3
SCALE 1" =500'

Filename: 020_MOTsigns.dgn

Scale: AS NOTED

No.	Revision	By	Date

Designed by: HNTB

CONSULTANT PROJECT MANAGER: R. Bruce Munger, P.E.

	By	Date		By	Date
Designed	JDR	08/15	Checked	CDH	08/15
Drawn	PMK	08/15	In Charge of	RAL	08/15

HNTB CORPORATION
340 County Road, Suite 6-C
Westbrook, ME 04092
TEL (207) 774-5155
FAX (207) 228-0909

MAINE TURNPIKE

THE GOLD STAR MEMORIAL HIGHWAY

MTA PROJECT MANAGER: William Yates

INTERCHANGES 32, 36, & 46 NB TOLL SYSTEM UPGRADES
INTERCHANGES 32 AND 36
WORK ZONE SPEED LIMIT SIGNING PLAN

SHEET NUMBER: MT-12

CONTRACT:2015.12

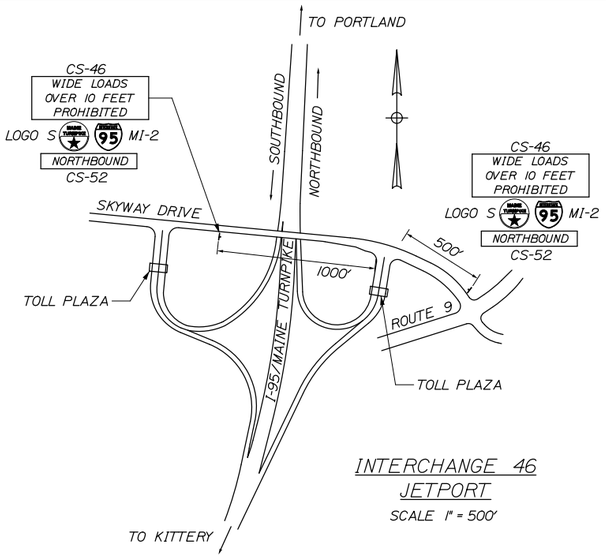

INTERCHANGE 46
JETPORT
SCALE 1" = 500'

EXIT 46 NOTES:

1. DURING LANE 9 CONSTRUCTION "WIDE LOADS PROHIBITED EXIT 46 MAINE TURNPIKE NORTHBOUND" SIGNAGE SHALL BE PLACED ON ALL APPROACH ROADS AND LOCATED 500' TO 1000' IN ADVANCE OF THE TOLL PLAZA. FINAL LOCATION OF ALL WIDE LOAD RESTRICTION SIGNS SHALL BE APPROVED BY THE RESIDENT.

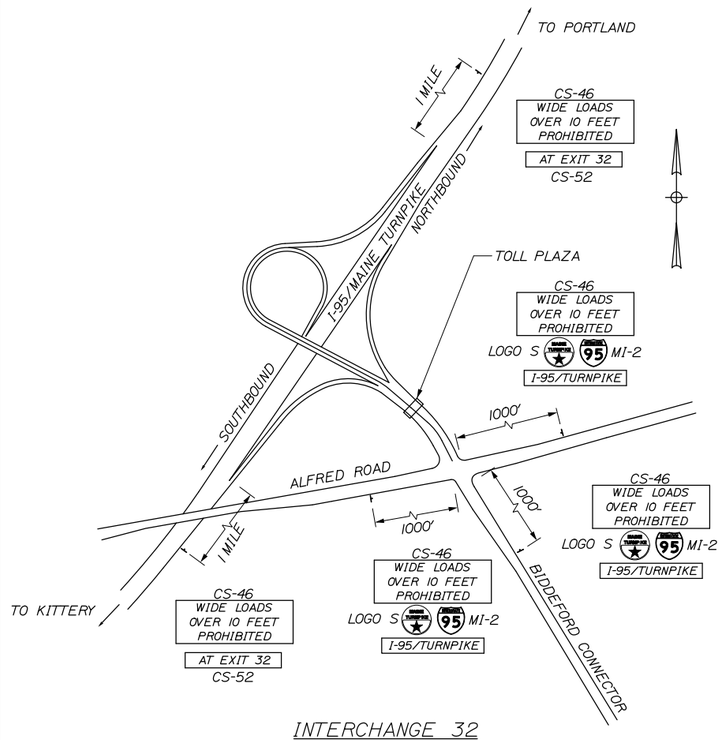

INTERCHANGE 32
BIDDEFORD
SCALE 1" = 500'

EXIT 32 NOTES:

1. DURING LANE 7 CONSTRUCTION, "WIDE LOADS PROHIBITED EXIT 32 ON MAINE TURNPIKE" SIGNAGE SHALL BE PLACED ON ALL APPROACH ROADS AND LOCATED 500' TO 1000' IN ADVANCE OF THE TOLL PLAZA. FINAL LOCATION OF ALL WIDE LOAD RESTRICTION SIGNS SHALL BE APPROVED BY THE RESIDENT.

2. DURING EXIT LANE CONSTRUCTION, "WIDE LOADS PROHIBITED EXIT 32 MAINE TURNPIKE" SIGNAGE SHALL BE PLACED ON I-95 MAINLINE IN ADVANCE OF THE EXIT. FINAL LOCATION OF ALL WIDE LOAD RESTRICTION SIGNS SHALL BE APPROVED BY THE RESIDENT.

EXIT 36 NOTES:

1. DURING LANE 5 CONSTRUCTION "WIDE LOADS PROHIBITED EXIT 36 MAINE TURNPIKE" SIGNAGE SHALL BE PLACED ON ALL APPROACH ROADS. FINAL LOCATION OF ALL WIDE LOAD RESTRICTION SIGNS SHALL BE APPROVED BY THE RESIDENT.

2. DURING EXIT LANE CONSTRUCTION "WIDE LOADS PROHIBITED EXIT 36 MAINE TURNPIKE" SIGNAGE SHALL BE PLACED ON I-95 MAINLINE IN ADVANCE OF THE EXIT. FINAL LOCATION OF ALL WIDE LOAD RESTRICTION SIGNS SHALL BE APPROVED BY THE RESIDENT.

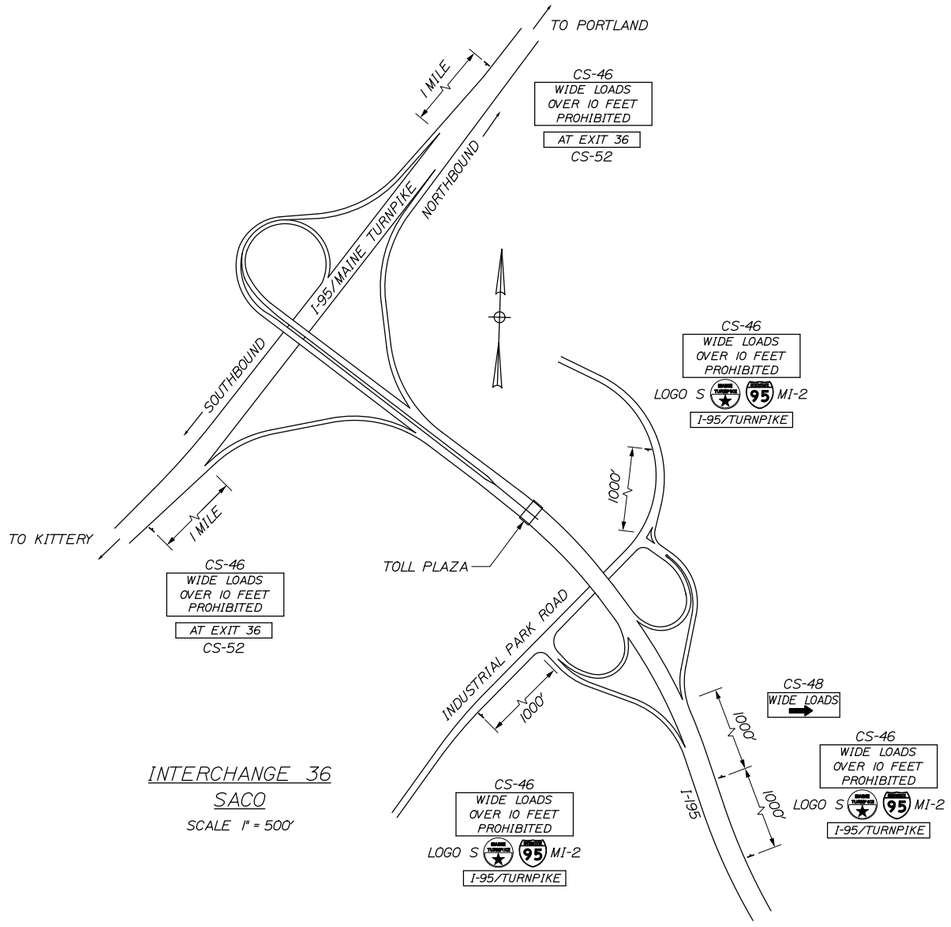

INTERCHANGE 36
SACO
SCALE 1" = 500'

Date:9/5/2015

Filename: 021_Wide Load Restriction Plan.dgn

Scale: AS NOTED	Designed by: HNTB	HNTB CORPORATION 340 County Road, Suite 6-C Westbrook, ME 04092 TEL (207) 774-5155 FAX (207) 228-0909	MAINE TURNPIKE THE GOLD STAR MEMORIAL HIGHWAY	INTERCHANGES 32, 36, & 46 NB TOLL SYSTEM UPGRADES MAINTENANCE OF TRAFFIC WIDE LOAD RESTRICTION SIGN PLAN

No.	Revision	By	Date

CONSULTANT PROJECT MANAGER: R. Bruce Munger, P.E.

	By	Date		By	Date
Designed	JRD	08/15	Checked	CDH	08/15
Drawn	PMK	08/15	In Charge of	RAL	08/15

MTA PROJECT MANAGER: William Yates

SHEET NUMBER: MT-13

CONTRACT:2015.12

MAINLINE CONSTRUCTION SIGN SUMMARY

IDENTIFICATION NUMBER	SIZE OF SIGN WIDTH	SIZE OF SIGN HEIGHT	TEXT	TEXT DIMENSIONS (INCHES) LETTER HEIGHT	TEXT DIMENSIONS (INCHES) VERTICAL SPACING	TEXT DIMENSIONS (INCHES) ARROW RTE. MKR.	NUMBER OF SIGNS REQUIRED	COLOR BACKGROUND	COLOR LEGEND BORDER	BORDER RADIUS	AREA IN SQUARE FEET
CS-85	54"	18"	NO TOLL	6"D	6"		2	WHITE	BLACK		6.75 (13.5)
CS-10	48"	48"	TRUCKS ENTERING	TEXT DIMENSIONS SHALL CONFORM TO THE STANDARD HIGHWAY SIGNS 2004 EDITION AND 2012 SUPPLEMENT			1	SHALL CONFORM TO THE STANDARD HIGHWAY SIGNS 2004 EDITION AND 2012 SUPPLEMENT			16.0 (16.0)
G20-2	48"	24"	END ROAD WORK				10				8.00 (80.0)
RI-2	60"	60"	YIELD				1				12.50 (25.0)
SP-7	24"	36"	DO NOT STOP	6"D 6"D 6"D	4.5" 4.5" 4.5"		1	WHITE	BLACK		10.00 (20.0)
W3-2a	48"	48"		TEXT DIMENSIONS SHALL CONFORM TO THE STANDARD HIGHWAY SIGNS 2004 EDITION AND 2012 SUPPLEMENT			1	SHALL CONFORM TO THE STANDARD HIGHWAY SIGNS 2004 EDITION AND 2012 SUPPLEMENT			16.00 (16.0)
W4-1	48"	48"					1				16.00 (64.0)
W12-1	48"	48"					1				16.00 (16.0)
W20-1	48"	48"	ROAD WORK AHEAD				11				16.00 (160.0)
CS-20	48"	48"	USE BOTH LANES				1				16.00 (16.0)

MAINLINE CONSTRUCTION SIGN SUMMARY

IDENTIFICATION NUMBER	SIZE OF SIGN WIDTH	SIZE OF SIGN HEIGHT	TEXT	TEXT DIMENSIONS (INCHES) LETTER HEIGHT	TEXT DIMENSIONS (INCHES) VERTICAL SPACING	TEXT DIMENSIONS (INCHES) ARROW RTE. MKR.	NUMBER OF SIGNS REQUIRED	COLOR BACKGROUND	COLOR LEGEND BORDER	BORDER RADIUS	AREA IN SQUARE FEET
W20-5	48"	48"	LANE CLOSED	TEXT DIMENSIONS SHALL CONFORM TO THE STANDARD HIGHWAY SIGNS 2004 EDITION AND 2012 SUPPLEMENT			3	SHALL CONFORM TO THE STANDARD HIGHWAY SIGNS 2004 EDITION AND 2012 SUPPLEMENT			16.00 (48.0)
WI-4L	48"	48"					1				16.00 (16.0)
WI-4B	48"	48"					2				16.00 (32.0)

WIDE LOAD CONSTRUCTION SIGN SUMMARY

IDENTIFICATION NUMBER	SIZE OF SIGN WIDTH	SIZE OF SIGN HEIGHT	TEXT	TEXT DIMENSIONS (INCHES) LETTER HEIGHT	TEXT DIMENSIONS (INCHES) VERTICAL SPACING	TEXT DIMENSIONS (INCHES) ARROW RTE. MKR.	NUMBER OF SIGNS REQUIRED	COLOR BACKGROUND	COLOR LEGEND BORDER	BORDER RADIUS	AREA IN SQUARE FEET
CS-52	96"	18"	NORTHBOUND I-95/TURNPIKE AT EXIT 32 AT EXIT 36	8"C	6"		2 6 2 2	ORANGE	BLACK		12.00 (168.0)
CS-46	96"	48"	WIDE LOADS OVER 10 FEET PROHIBITED	8"C 8"C 8"C	6" 6" 6" 6"		12	ORANGE	BLACK		32.00 (384.0)
CS-48	60"	36"	WIDE LOADS →	8"C	6" 6" 6"	15"x25" @90°	1	ORANGE	BLACK		15.00 (15.0)
MI-2	24"	24"	INTERSTATE 95	TEXT DIMENSIONS SHALL CONFORM TO THE STANDARD HIGHWAY SIGNS 2004 EDITION AND 2012 SUPPLEMENT			8	SHALL CONFORM TO THE STANDARD HIGHWAY SIGNS 2004 EDITION AND 2012 SUPPLEMENT			4.00 (32.0)
LOGO S	24"	24"	MAINE TURNPIKE	SEE DETAILS			8	SEE DETAILS			4.00 (32.0)

Date:9/5/2015

Filename: 022_MOT_Sign Summary1.dgn

Scale: N.T.S.

No.	Revision	By	Date

Designed by: HNTB

CONSULTANT PROJECT MANAGER: R. Bruce Munger, P.E.

	By	Date		By	Date
Designed	JRD	08/15	Checked	CDH	08/15
Drawn	PMK	08/15	In Charge of	RAL	08/15

HNTB CORPORATION
340 County Road, Suite 6-C
Westbrook, ME 04092
TEL (207) 774-5155
FAX (207) 228-0909

MAINE TURNPIKE

THE GOLD STAR MEMORIAL HIGHWAY

MTA PROJECT MANAGER: William Yates

INTERCHANGES 32, 36, & 46 NB TOLL SYSTEM UPGRADES

MAINTENANCE OF TRAFFIC SIGN SUMMARY 1

SHEET NUMBER: MT-14

CONTRACT:2015.12

Date:9/5/2015

WORK ZONE SPEED LIMIT CONSTRUCTION SIGN SUMMARY

IDENTIFICATION NUMBER	SIZE OF SIGN		TEXT	TEXT DIMENSIONS (INCHES)			NUMBER OF SIGNS REQUIRED	COLOR		BORDER RADIUS	AREA IN SQUARE FEET
	WIDTH	HEIGHT		LETTER HEIGHT	VERTICAL SPACING	ARROW RTE. MKR.		BACK-GROUND	LEGEND BORDER		
G20-5aP	48"	24"	WORK ZONE	6" 6"	4.5"		4	ORANGE	BLACK		8.00 (32.0)
R2-1 (25)	48"	60"	SPEED LIMIT 25	TEXT DIMENSIONS SHALL CONFORM TO THE STANDARD HIGHWAY SIGNS 2004 EDITION AND 2012 SUPPLEMENT			4	WHITE	BLACK		20.00 (80.0)
R2-6aP	48"	24"	FINES DOUBLED	6" 6"	4.5"		4	WHITE	BLACK		8.00 (32.0)
R2-12	48"	60"	END WORK ZONE SPEED	TEXT DIMENSIONS SHALL CONFORM TO THE STANDARD HIGHWAY SIGNS 2004 EDITION AND 2012 SUPPLEMENT			2	WHITE	BLACK		20.00 (40.0)
W3-5 (25)	48"	48"	SPEED LIMIT 25				4	SHALL CONFORM TO THE STANDARD HIGHWAY SIGNS 2004 EDITION AND 2012 SUPPLEMENT			16.00 (64.0)

Filename: 023_MOT_Sign Summary2.dgn

Scale: N.T.S.

No.	Revision	By	Date

Designed by: HNTB

CONSULTANT PROJECT MANAGER: R. Bruce Munger, P.E.

	By	Date		By	Date
Designed	JRD	08/15	Checked	CDH	08/15
Drawn	PMK	08/15	In Charge of	RAL	08/15

HNTB CORPORATION
340 County Road, Suite 6-C
Westbrook, ME 04092
TEL (207) 774-5155
FAX (207) 228-0909

MAINE TURNPIKE

THE GOLD STAR MEMORIAL HIGHWAY

MTA PROJECT MANAGER: William Yates

INTERCHANGES 32, 36, & 46 NB
TOLL SYSTEM UPGRADES

MAINTENANCE OF TRAFFIC
SIGN SUMMARY 2

SHEET NUMBER: MT-15

CONTRACT:2015.12

Date:9/5/2015

GUARDRAIL EARTHWORK AND PAVEMENT REPAIR NOTES

1. ALL DISTURBED AREAS DUE TO THE WORK PERFORMED UNDER THIS CONTRACT FOR GUARDRAIL REPAIRS, MODIFICATION AND/OR INSTALLATIONS SHALL BE REPAIRED AND RESTORED TO ORIGINAL CONDITION. GRASSED AREAS SHALL RECEIVE 4" OF LOAM, SEED, FERTILIZER AND MULCH. IN PAVED AREAS, SUBBASE GRAVEL SHALL BE REPLACED AND RECOMPACTED WITH MAINE DOT TYPE-D GRAVEL AND HOT MIX ASPHALT TO A THICKNESS TO MATCH SURROUNDING PAVEMENT. PAYMENT FOR THIS WORK SHALL BE INCIDENTAL TO THE GUARDRAIL ITEMS UNLESS OTHERWISE NOTED.

2. COMPACTION OF EARTH AND/OR SUBBASE GRAVEL AROUND GUARDRAIL POSTS DISTURBED DURING THE WORK IS REQUIRED. ALL POSTS SHALL BE PLUMB AFTER COMPACTION.

3. EXCAVATION NECESSARY TO MAINTAIN DRAINAGE WAYS OUTSIDE OF THE FLEAT 350 WIDENING OR THE SHOULDER WIDENING WORK AREA SHALL BE PAID FOR UNDER ITEM 631.12 ALL PURPOSE EXCAVATOR AS APPROVED BY THE RESIDENT ENGINEER. EXCAVATED MATERIAL SHALL BE USED TO GRADE ANY PROPOSED SLOPE AREA OUTSIDE OF 1:1 SLOPE LIMIT OR USED TO FLATTEN SLOPES OUTSIDE THE WORK AREA AS APPROVED BY THE RESIDENT. PLACEMENT AND COMPACTION OF THE EXCAVATED MATERIAL WILL NOT BE MEASURED SEPARATELY FOR PAYMENT.

4. SLOPES CONSTRUCTED FROM THE ABOVE NOTED EXCAVATED MATERIAL SHALL BE LOAMED, SEEDED AND MULCHED. LOAM, SEED AND MULCH WILL NOT BE MEASURED FOR PAYMENT AND SHALL BE INCIDENTAL TO THE CONTRACT.

GUARDRAIL INSTALLATION AND MODIFICATION NOTES

1. THE CONTRACTOR SHALL FOLLOW ALL MANUFACTURER'S INSTALLATION INSTRUCTIONS FOR THE INSTALLATION AND/OR MODIFICATION OF ANY AND ALL GUARDRAIL COMPONENTS TO BE INSTALLED UNDER THIS CONTRACT. THE CONTRACTOR SHALL NOTIFY THE RESIDENT ENGINEER IF THE CONTRACTOR DISCOVERS CONFLICTS OR IRREGULARITIES OF ANY SORT BETWEEN THE MANUFACTURER'S INSTALLATION INSTRUCTIONS AND THESE CONTRACT DOCUMENTS.

2. THE CONTRACTOR IS REQUIRED TO HAVE AN APPROVED CRASH END TREATMENT ON ALL GUARDRAIL ENDS IN ALL WORK AREAS AT THE END OF EACH DAY. THE CONTRACTOR SHALL ENSURE THAT ENOUGH TIME EXISTS IN THE WORK DAY TO COMPLETE ALL MODIFICATIONS AND/OR INSTALLATIONS TO END TERMINALS. THE CONTRACTOR SHALL ENSURE THAT ALL PARTS AND MANPOWER ARE ON-SITE PRIOR TO UNDERTAKING ANY GUARDRAIL MODIFICATIONS.

3. GUARDRAIL HEIGHT SHALL BE INSTALLED OR ADJUSTED TO 30" -0", -1/2" HEIGHT. GUARDRAIL HEIGHT SHALL BE MEASURED FROM THE EDGE OF PAVEMENT WHEN WITHIN 2 FEET. IF GUARDRAIL IS OFFSET FROM EDGE OF PAVEMENT GREATER THAN 2 FEET, THEN HEIGHT OF RAIL SHALL BE MEASURED AT GROUND ELEVATION ADJACENT TO EACH POST BELOW THE RAIL TO THE TOP OF GUARDRAIL AND AFTER FINAL GRADING OF SHOULDER.

4. THE CONTRACTOR SHALL REMOVE AND DISPOSE OF ALL CUT BOLTS, DISCARDED PARTS, TRASH, PAVEMENT DEBRIS, ETC., AFTER COMPLETING GUARDRAIL MODIFICATIONS AND/OR INSTALLATIONS.

5. CONNECTIONS FOR PROPOSED RAIL TO EXISTING RAIL SHALL BE INCIDENTAL TO THE INSTALLATION OF PROPOSED GUARDRAIL.

6. FLEAT 350 TERMINALS INSTALLED UNDER THIS CONTRACT SHALL BE INSTALLED AT A HEIGHT OF 27 1/2" AT THE TERMINAL HEAD AND TRANSITIONING UP TO THE REQUIRED HEIGHT OF RAIL OF 30" -0", -1/2" OVER A 25 LINEAR FOOT LENGTH. HEIGHT OF FLEAT 350 RAIL SHALL BE MEASURED FROM THE GROUND ELEVATION UNDER THE FLEAT RAIL PANELS TO THE TOP OF RAIL.

7. SOIL ANCHOR TUBES INSTALLED AS PART OF CAT, FLEAT OR TRAILING TERMINAL ENDS SHALL NOT PROTRUDE FROM THE GROUND MORE THAN 3 1/2". ADDITIONAL SITE GRADING MAY BE REQUIRED TO ADJUST SOIL TUBE REVEAL AND IF REQUIRED SHALL NOT DIRECT STORMWATER SURFACE DRAINAGE TOWARDS THE SHOULDER OR TRAVEL WAY. ADDITIONAL SITE GRADING SHALL BE INCIDENTAL TO THE END TERMINAL INSTALLATION.

8. TRANSITION RAIL HEIGHT ON TERMINAL END-ANCHORED ENDS FROM 27 1/2" AT THE END OF THE RAIL TO 30" HEIGHT OVER A 25 LINEAR FOOT LENGTH.

EROSION

1. EROSION CONTROL BLANKET SHALL BE INSTALLED ON ALL DISTURBED 2:1 SLOPES AND IN FLOW LINE OF ALL DISTURBED DITCHES AFTER LOAM AND SEED HAVE BEEN INSTALLED.

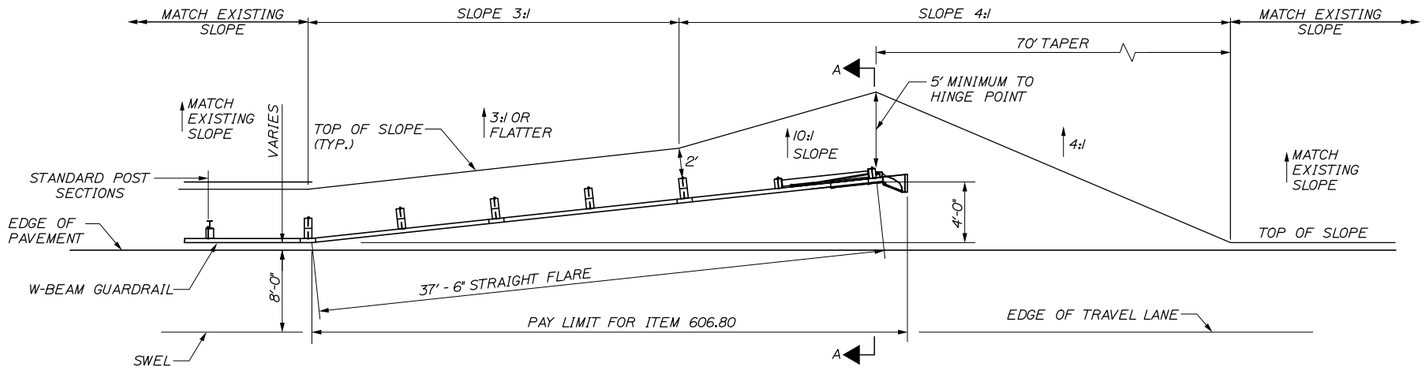

GUARDRAIL 350 FLARED TERMINAL PLAN

N.T.S.

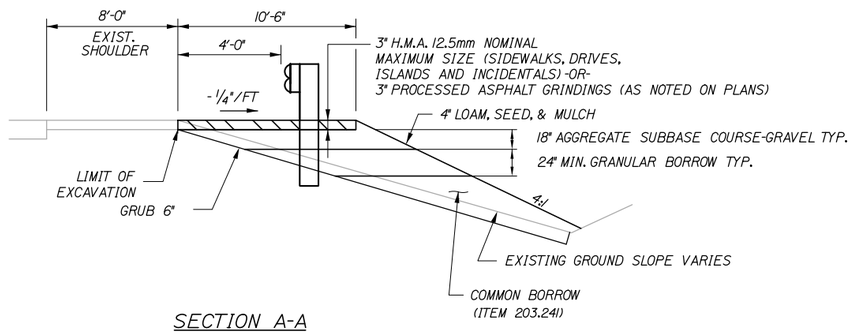

SECTION A-A

FILL DETAIL

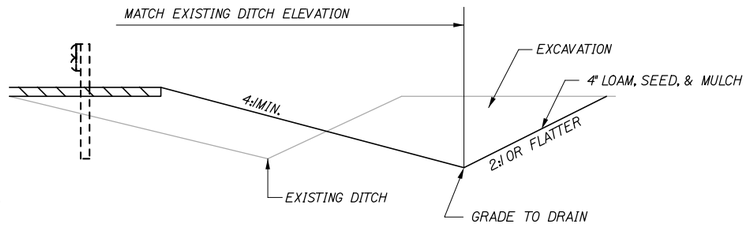

SECTION A-A

DITCH DETAIL

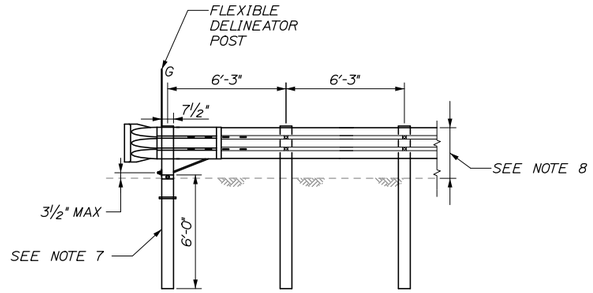

TERMINAL END - ANCHORED END - THRIE BEAM

(ITEM 606.279)

1/4" = 1'-0"

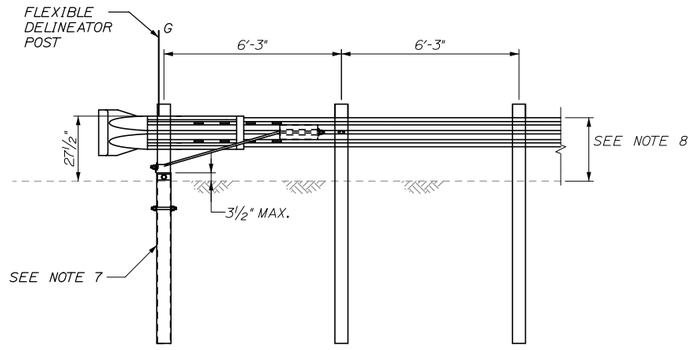

TERMINAL END - ANCHORED END

(ITEM 606.278)

3/8" = 1'-0"

Filename: 024_GREndTreatmentDetails.dgn

Scale: AS NOTED

No.	Revision	By	Date

Designed by: HNTB

CONSULTANT PROJECT MANAGER: R. Bruce Munger, P.E.

	By	Date		By	Date
Designed	CDH	08/15	Checked	CDH	08/15
Drawn	PDB	08/15	In Charge of	RAL	08/15

HNTB CORPORATION
340 County Road, Suite 6-C
Westbrook, ME 04092
TEL (207) 774-5155
FAX (207) 228-0909

MAINE TURNPIKE

THE GOLD STAR MEMORIAL HIGHWAY

MTA PROJECT MANAGER: William Yates

INTERCHANGES 32, 36, & 46 NB TOLL SYSTEM UPGRADES

INTERCHANGES 32 AND 36 GUARDRAIL END TREATMENT DETAILS

SHEET NUMBER: GD-01

CONTRACT:2015.12

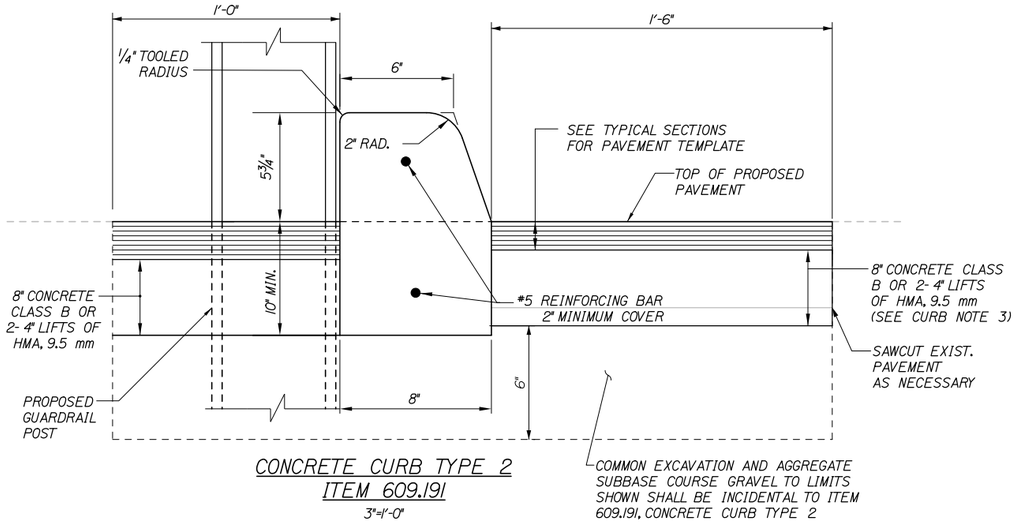

CONCRETE CURB TYPE 2
ITEM 609.191
3"=1'-0"

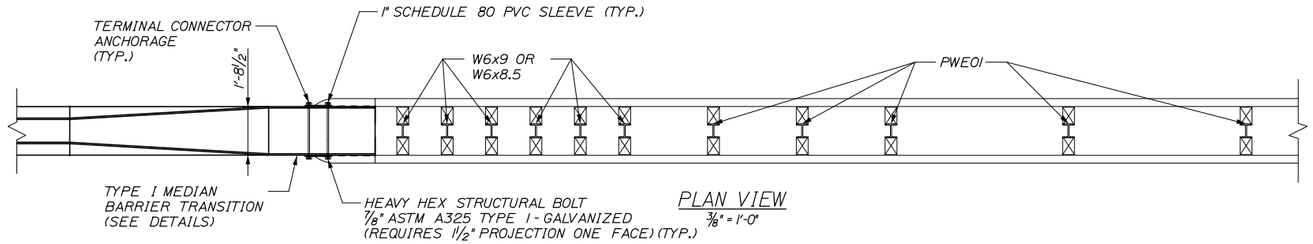

PLAN VIEW
3/8" = 1'-0"

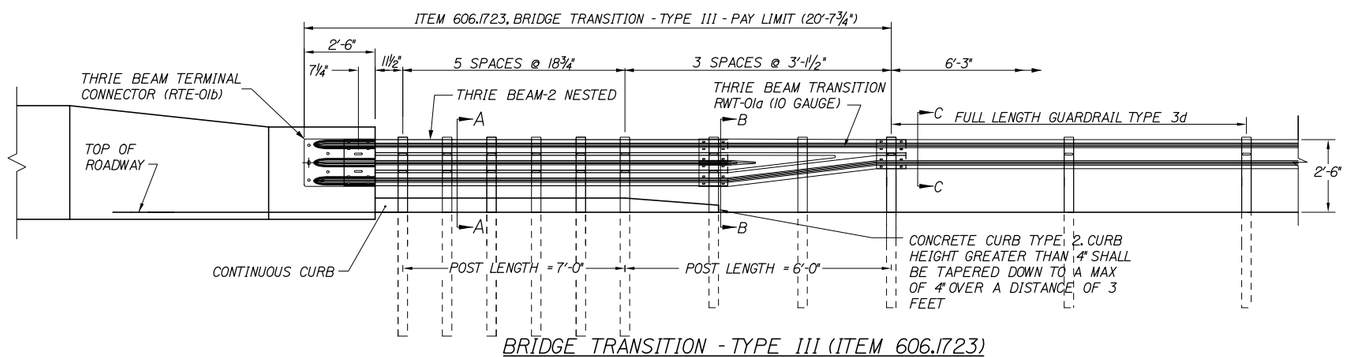

BRIDGE TRANSITION - TYPE III (ITEM 606.1723)
3/8" = 1'-0"

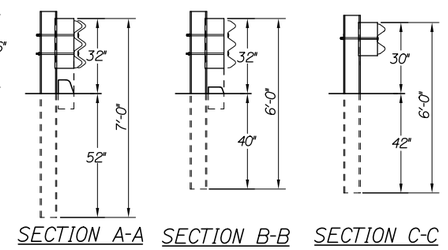

SECTION A-A SECTION B-B SECTION C-C

CURB NOTES:

1. CURBING SHALL BE EITHER PRECAST CONCRETE, CAST-IN-PLACE CONCRETE OR GRANITE TO MEET DIMENSIONS SHOWN ON THE PLANS. CURBING SHALL BE PAID UNDER ITEM 609.191 CONCRETE CURB TYPE 2.
2. CONCRETE CURBS USED IN CONJUNCTION WITH THRIE-BEAM BRIDGE ATTACHMENT SHALL BE TYPE 2, SEE DETAIL. CONCRETE CURBS SHALL BE CONTINOUS WITHOUT DRAINAGE CUTS.
3. CURB TRANSITION SHALL BE INCLUDED FOR PAYMENT UNDER ITEM 609.191 CONCRETE CURB TYPE 2.
4. SAWCUTTING EXISTING PAVEMENT, CONCRETE FILL, AND PAVEMENT TO LIMITS SHOWN SHALL BE INCIDENTAL TO ITEM 609.191

GENERAL NOTES:

1. ADDITIONAL HOLES MAY BE MADE IN THE THRIE-BEAM PANELS BY DRILLING, PUNCHING, OR OTHER MEANS THAT PRODUCE A NEAT, CLEAN HOLE. BURNING HOLES WILL NOT BE ALLOWED.
2. THRIE BEAM SHALL BE PLACED WITH THE COMPOSITE BLOCKOUT FACE IN FRONT OF OR DIRECTLY ABOVE THE CURB FACE.
3. RAIL ELEMENT SHALL MEET ALL REQUIREMENTS OF AASHTO M-180 EXCEPT AS MODIFIED ON THE PLANS. THE THRIE BEAM TRANSITION TO W-BEAM SHALL BE OF THE SAME MATERIAL, BUT SHALL NOT BE LESS THAN 10 GAUGE.
4. AFTER INSTALLATION IS COMPLETE, UPSET THE THREAD ON THE ANCHOR BOLTS IN THREE PLACES AROUND EACH BOLT, AT THE JUNCTION OF THE NUT AND THE EXPOSED THREAD, WITH A CENTER PUNCH OR SIMILAR TOOL.
5. STANDARD BARRIER HARDWARE HAS BEEN USED TO DEVELOP THESE GUARDRAIL ATTACHMENTS. DESIGNATIONS PROVIDED IN PARENTHESIS RELATE TO STANDARD ELEMENTS DETAILED IN "A GUIDE TO STANDARDIZED BARRIER RAIL HARDWARE." 1979. AASHTO-AGC-ARTBA JOINT COOPERATE COMMITTEE.
6. 1" HOLE IN CONCRETE SHALL BE FORMED BY A METHOD APPROVED BY THE ENGINEER
7. FOR THE GUARDRAIL TRANSITION, SECTION C-C GUARDRAIL TYPE 3d EXISTING OR PROPOSED SHALL TAPER FROM 30" TO TOP OF POST AT TRANSITION TO 27" OVER 50' MIN.
8. THRIE BEAM BRIDGE ATTACHMENT SHALL HAVE 3" x 7/8" SLOTS AT THE FIRST BOLT CONNECTIONS ON THE BRIDGE DECK. THE THREADS ON THE BOLTS AT THE SLOTS SHALL BE UPSET AT THE JUNCTION OF THE NUT WITH A CENTER PUNCH OR SIMILAR TOOL.

Date:9/5/2015

Filename: 025_GRTransitionDetail.dgn

Scale: AS NOTED

No.	Revision	By	Date

Designed by: HNTB

CONSULTANT PROJECT MANAGER: R. Bruce Munger, P.E.

	By	Date		By	Date
Designed	CDH	08/15	Checked	CDH	08/15
Drawn	PDB	08/15	In Charge of	RAL	08/15

HNTB CORPORATION
340 County Road, Suite 6-C
Westbrook, ME 04092
TEL (207) 774-5155
FAX (207) 228-0909

MAINE TURNPIKE

THE GOLD STAR MEMORIAL HIGHWAY

MTA PROJECT MANAGER: William Yates

INTERCHANGES 32, 36, & 46 NB TOLL SYSTEM UPGRADES

INTERCHANGES 32 & 36 GUARDRAIL TRANSITION DETAIL

SHEET NUMBER: GD-02

CONTRACT:2015.12

DIMENSIONS FOR SLOPE OF 2:1

D	a (FT)	b (FT)	c (FT)	e (FT)	f (FT)	g (FT)	STONE DEPTH (FT)	STONE (CY)
12"	1.00	4.00	3.00	2.00	6.00	1.00	1.50	1.30
15"	1.00	4.50	3.37	2.25	6.75	1.63	1.50	1.70
18"	1.00	5.00	3.75	2.50	7.50	2.25	1.50	2.09
21"	1.00	5.50	4.13	2.75	8.25	2.88	1.50	2.58
24"	1.00	6.00	4.50	3.00	9.00	3.50	1.50	3.12
30"	1.00	7.00	5.25	3.50	10.50	4.75	1.50	4.33
36"	1.00	8.00	6.00	4.00	12.00	6.00	1.50	5.75
42"	1.00	9.00	6.75	4.50	13.50	7.25	1.50	7.37
48"	1.00	10.00	7.50	5.00	15.00	8.50	1.50	9.18
54"	1.00	11.00	8.25	5.50	16.50	9.75	1.50	11.19
60"	1.00	12.00	9.00	6.00	18.00	11.00	1.50	13.40
66"	1.00	13.00	9.75	6.50	19.50	12.25	1.50	15.81
72"	1.00	14.00	10.50	7.00	21.00	13.50	1.50	18.41
84"	1.00	16.00	12.00	8.00	24.00	16.00	1.50	24.22

DIMENSIONS FOR SLOPE OF 4:1

D	a (FT)	b (FT)	c (FT)	e (FT)	f (FT)	g (FT)	STONE DEPTH (FT)	STONE (CY)
12"	1.00	8.00	6.00	2.00	6.00	0.00	1.50	2.20
15"	1.00	9.00	6.75	2.25	6.75	0.00	1.50	2.80
18"	1.00	10.00	7.50	2.50	7.50	0.00	1.50	3.40
21"	1.00	11.00	8.25	2.75	8.25	0.00	1.50	4.10
24"	1.00	12.00	9.00	3.00	9.00	0.00	1.50	4.86
30"	1.00	14.00	10.50	3.50	10.50	0.00	1.50	6.58
36"	1.00	16.00	12.00	4.00	12.00	0.00	1.50	8.56
42"	1.00	18.00	13.50	4.50	13.50	0.50	1.50	10.92
48"	1.00	20.00	15.00	5.00	15.00	1.00	1.50	13.57
54"	1.00	22.00	16.50	5.50	16.50	1.50	1.50	16.50
60"	1.00	24.00	18.00	6.00	18.00	2.00	1.50	19.72
66"	1.00	26.00	19.50	6.50	19.50	2.50	1.50	23.22
72"	1.00	28.00	21.00	7.00	21.00	3.00	1.50	27.01
84"	1.00	32.00	24.00	8.00	24.00	4.00	1.50	35.45

DIMENSIONS FOR SLOPE OF 6:1

D	a (FT)	b (FT)	c (FT)	e (FT)	f (FT)	g (FT)	STONE DEPTH (FT)	STONE (CY)
12"	0.50	9.00	7.50	1.50	4.50	0.00	1.50	2.30
15"	0.50	10.50	8.75	1.75	5.50	0.00	1.50	2.93
18"	0.50	12.00	10.00	2.00	6.50	0.00	1.50	3.57
21"	0.50	13.50	11.25	2.25	7.25	0.00	1.50	4.46
24"	0.50	15.00	12.50	2.50	8.00	0.00	1.50	5.44
30"	0.50	18.00	15.00	3.00	9.50	0.00	1.50	7.71
36"	0.50	21.00	17.50	3.50	11.00	0.00	1.50	10.37
42"	0.50	24.00	20.00	4.00	12.50	0.00	1.50	13.42
48"	0.50	27.00	22.50	4.50	14.00	0.00	1.50	16.87
54"	0.50	30.00	25.00	5.00	15.50	0.00	1.50	20.70
60"	0.50	33.00	27.50	5.50	17.00	0.00	1.50	24.93
66"	0.50	36.00	30.00	6.00	18.50	0.00	1.50	29.55
72"	0.50	39.00	32.50	6.50	20.00	0.00	1.50	34.56
84"	0.50	45.00	37.50	7.50	23.00	0.00	1.50	45.76

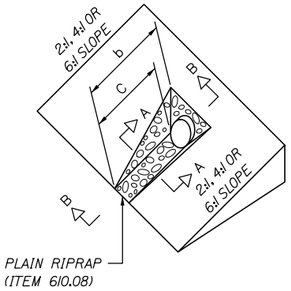

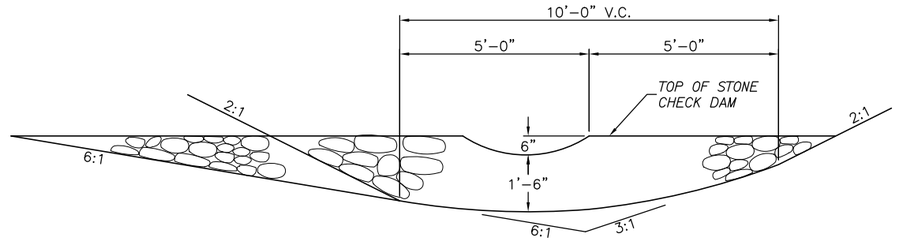

SECTION

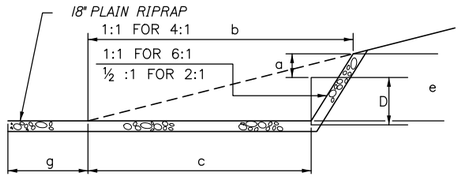

SECTION B-B

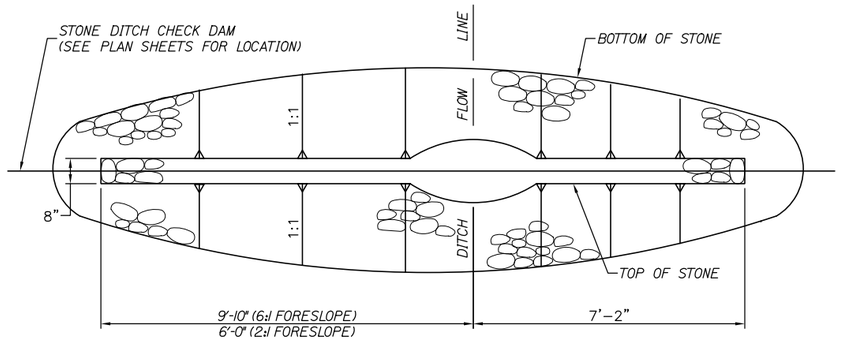

PLAN

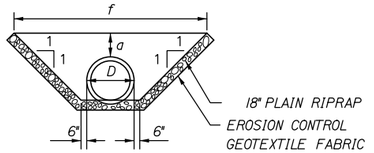

SECTION A-A

STONE CHECK DAM

1" = 2-0"

FORESLOPE	BACKSLOPE	QUANTITY C.Y. STONE
6:1	3:1	2.5
2:1	3:1	2.0

ROADWAY CULVERT END SLOPE TREATMENT

NOTES:

1. THE DIMENSIONS SHOWN ARE APPROXIMATE AND MAY BE MODIFIED BY THE ENGINEER.

2. STONE QUANTITIES ARE FOR ONE END OF THE PIPE.

NOTES:

1. STONE FOR TEMPORARY AND PERMANENT STONE CHECK DAMS SHALL MEET THE REQUIREMENTS OF MDOT SPECIFICATION 703.29, STONE DITCH PROTECTION.

2. TEMPORARY STONE CHECK DAMS WILL BE PAID FOR UNDER ITEM 610.181.

3. PERMANENT STONE CHECK DAMS WILL BE PAID FOR UNDER ITEM 610.182.

Date:9/5/2015

Filename: 026_Erosion_Con_Det1.dgn

Scale: N.T.S.

No.	Revision	By	Date

Designed by: HNTB

CONSULTANT PROJECT MANAGER: R. Bruce Munger, P.E.

	By	Date		By	Date
Designed	CDH	08/15	Checked	CDH	08/15
Drawn	HME	08/15	In Charge of	RAL	08/15

HNTB CORPORATION
340 County Road, Suite 6-C
Westbrook, ME 04092
TEL (207) 774-5155
FAX (207) 228-0909

MAINE TURNPIKE

THE GOLD STAR MEMORIAL HIGHWAY

MTA PROJECT MANAGER: William Yates

INTERCHANGES 32, 36, & 46 NB
TOLL SYSTEM UPGRADES

INTERCHANGE 32
EROSION CONTROL DETAILS

SHEET NUMBER: ED32-01

CONTRACT:2015.12

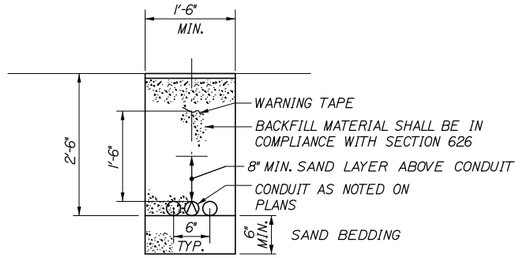

TRENCH CROSS SECTION

NOT TO SCALE

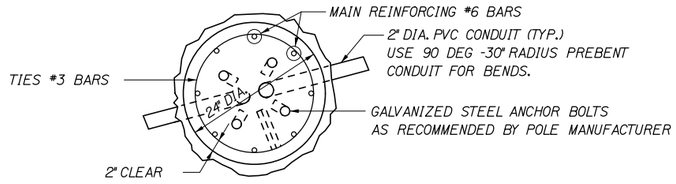

SECTION A-A

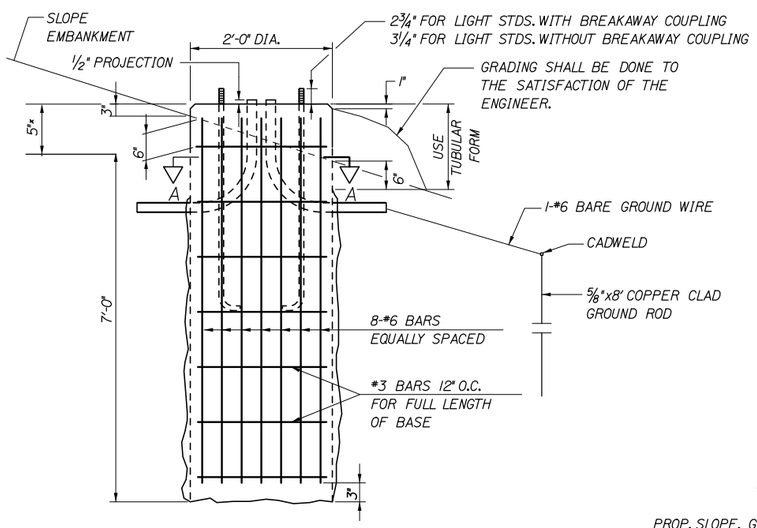

24 INCH FOUNDATION

NOT TO SCALE

NOTE:
WHERE SOLID ROCK IS ENCOUNTERED AT LESS THAN THE REQUIRED DISTANCE BELOW GROUND LEVEL, REINFORCING STEEL SHALL BE DOWELED INTO LEDGE AS SHOWN ON MAINE DOT STANDARD DETAIL 626(06). PAYMENT SHALL BE INCIDENTAL TO THE FOUNDATION PAY ITEM.

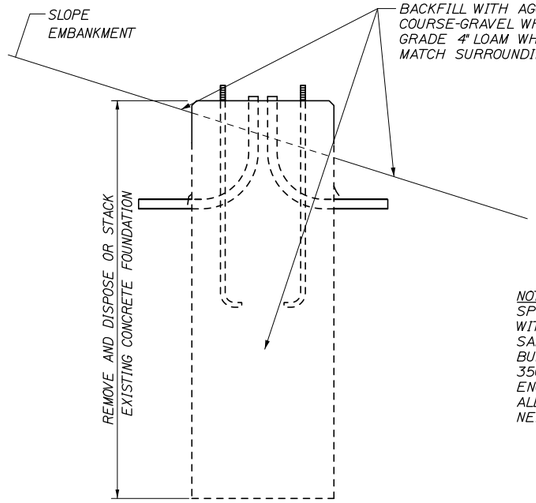

REMOVAL OF CONCRETE FOUNDATION

NOT TO SCALE

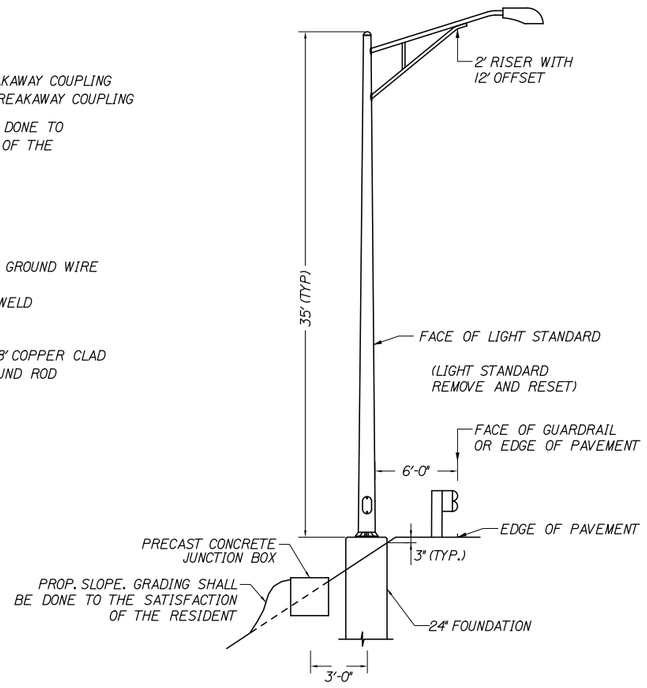

PLACEMENT OF LIGHT STANDARD

NO SCALE

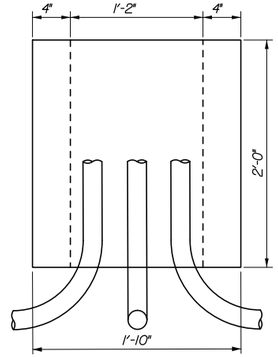

NOTE:
SPLICES IN BOX SHALL BE MADE WITH ILSCO USPA-350-SS-DB SAFETYSUB WATER TIGHT DIRECT BURY SPLICE WIRE RANGE 350MCM-10-STR. ONLY. PROVIDE ENOUGH SLACK IN THE WIRE TO ALLOW REMOVAL OF SPLICES AND NEATLY ARRANGE WIRE IN BOX.

ELEVATION

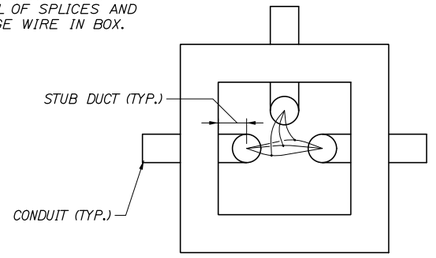

TOP

PRECAST CONCRETE JUNCTION BOX

NOT TO SCALE

BREAKAWAY COUPLINGS AND SKIRT DETAIL *

NOT TO SCALE

* BREAKAWAY COUPLINGS SHALL BE REQUIRED ON ALL NEW LIGHT STANDARDS

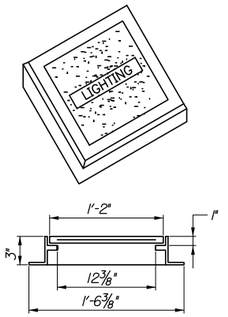

ELECTRICAL PULL BOX COVER

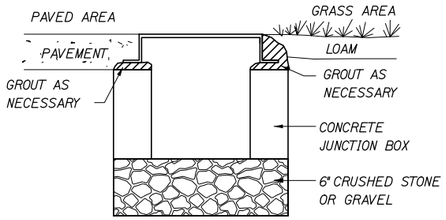

JUNCTION BOX COVER & FRAME

NOTE:
INSTALL JUNCTION BOXES ON GRADE, GROUT AS NECESSARY AS SHOWN ABOVE.

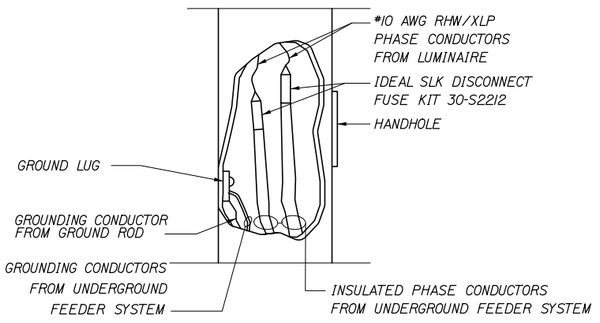

*SEE ELECTRICAL PLANS FOR WIRE SIZES

TYPICAL POLE WIRING DETAIL

NOT TO SCALE

Date:9/5/2015

Filename: 027_LightingDets.dgn

Scale: AS NOTED

No.	Revision	By	Date

Designed by: HNTB

CONSULTANT PROJECT MANAGER: R. Bruce Munger, P.E.

	By	Date		By	Date
Designed	CDH	08/15	Checked	CDH	08/15
Drawn	PMK	08/15	In Charge of	RAL	08/15

HNTB CORPORATION
340 County Road, Suite 6-C
Westbrook, ME 04092
TEL (207) 774-5155
FAX (207) 228-0909

MAINE TURNPIKE

THE GOLD STAR MEMORIAL HIGHWAY

MTA PROJECT MANAGER: William Yates

INTERCHANGES 32, 36, & 46 NB TOLL SYSTEM UPGRADES

INTERCHANGE 32 LIGHTING DETAILS

SHEET NUMBER: LD32-01

CONTRACT:2015.12

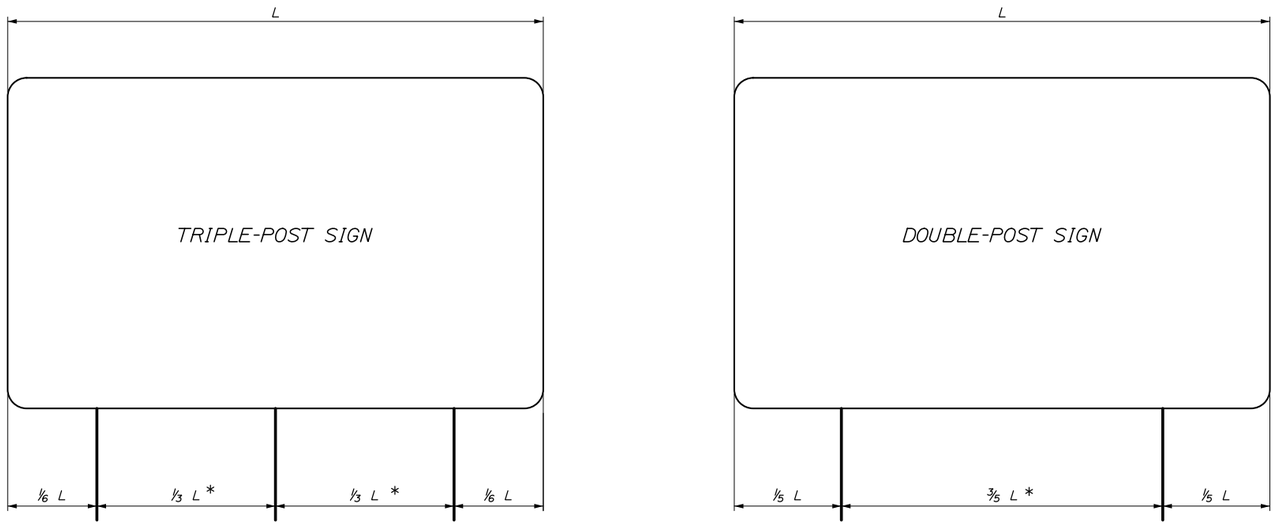

POLE SPACING DETAIL

N.T.S.

* - A MINIMUM 7 FEET REQUIRED WHEN INSTALLED ON BREAKAWAY DEVICES

SINGLE SUPPORT SIGNS

FOUNDATION DIAMETER	SIGN AREA (A)	SIGN WIDTH (W)	POST SIZE	BASE PLATE (1) (3)	MATERIAL	ANCHOR BOLTS (2)	BOLT CIRCLE	MAXIMUM MOUNTING HEIGHT
	A < 4 FT^2		U CHANNEL POST					12 FEET TO SIGN CENTER
	4 < A <= 10 FT^2		WOOD POST 6"X6"					
18"	10 < A <= 16 FT^2	W=4'-0" MAX. BUT INCLUDES 5'-0" YIELD SIGN	W6X9	12"X12"X1/4" 41 LBS.	A36	1" ϕ X 3'-0"	12"	
18"	16 < A <= 25 FT^2	W=5'-0" MAX	W6X15	12"X12"X1/4" 41 LBS.	A36	1" ϕ X 3'-0"	12"	
24"	25 < A <= 42 FT^2	W=7'-0" MAX	W8X24	14"X14"X1/4" 55 LBS.	A36	1 1/4" ϕ X 3'-6"	14"	

MULTIPLE SUPPORT SIGNS

24"	TO 60 FT /POST^2		W8X18	14"X14"X1/4" 55 LBS.	A36	1 1/4" ϕ X 3'-6"	14"	20 FEET TO SIGN CENTER
24"	60-85 FT /POST^2		W10X22	12"X17"X1 1/4" 72 LBS.	A36	1 1/4" ϕ X 3'-6"	15"	
30"	85-110 FT /POST^2		W12X26	13"X19"X1 1/4" 87 LBS.	A36	1 1/2" ϕ X 4'-0"	15"	
30"	110-135 FT /POST^2		W14X30	14"X21"X1 1/4" 104 LBS.	A36	1 1/2" ϕ X 4'-0"	19"	

GENERAL NOTES

1. BOLTS TO BE 50,000 PSI MINIMUM YIELD STRENGTH.

2. POST TO BASE PLATE WELD SHALL BE 5/16" FILLET WELD.

3. BASE PLATES AND H-BEAMS SHALL BE HOT DIPPED GALVANIZED AFTER FABRICATION IN ACCORDANCE WITH SECTION 720.06.

BREAKAWAY NOTES

1. ON 6"X6" WOOD POSTS, DRILL 3/4" DIAMETER HOLES AT RIGHT ANGLES TO ONE ANOTHER 4" ABOVE GROUND LEVEL TO MEET BREAKAWAY STANDARDS.

2. ON BREAKAWAY SUPPORTS, THE HINGE SHOULD BE A MINIMUM OF 7' ABOVE THE FOUNDATION. NO PERMANENT SUPPLEMENTARY SIGNS SHALL BE ATTACHED BELOW THE HINGE.

3. A SINGLE POSTED SIGN REQUIRING A BREAKAWAY DEVICE SHALL NOT HAVE A HINGE.

REMOVE AND RESET GUIDE SIGN NOTES

1. EXISTING SIGN POST LENGTHS ARE APPROXIMATE AND SHALL BE FIELD VERIFIED BY THE CONTRACTOR IF THE POSTS ARE TO BE REUSED.

2. THE CONTRACTOR MAY REUSE EXISTING POLES, FOUNDATIONS AND BREAKAWAY DEVICES AT ANY SIGN LOCATION WHERE FEASIBLE.

3. PROPOSED POLE LENGTHS ARE MEASURED FROM THE TOP OF THE FOUNDATION TO THE TOP OF SIGN AND ARE APPROXIMATE. FINAL POST LENGTHS SHALL BE DETERMINED BY THE CONTRACTOR ONCE FOUNDATIONS ARE PLACED.

Date:9/5/2015

Filename: 028_Signing-Details.dgn

Scale: AS NOTED

No.	Revision	By	Date

Designed by: HNTB

CONSULTANT PROJECT MANAGER: R. Bruce Munger, P.E.

	By	Date		By	Date
Designed	CDH	08/15	Checked	CDH	08/15
Drawn	PMK	08/15	In Charge of	RAL	08/15

HNTB CORPORATION
340 County Road, Suite 6-C
Westbrook, ME 04092
TEL (207) 774-5155
FAX (207) 228-0909

MAINE TURNPIKE

THE GOLD STAR MEMORIAL HIGHWAY

MTA PROJECT MANAGER: William Yates

INTERCHANGES 32, 36, & 46 NB
TOLL SYSTEM UPGRADES

INTERCHANGE 32
SIGNING DETAILS

SHEET NUMBER: SD32-01

CONTRACT:2015.12

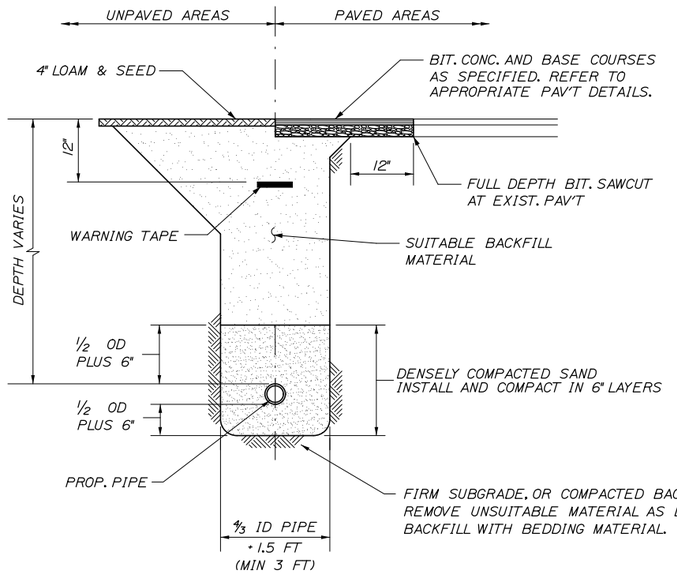

STANDARD PIPE/CONDUIT TRENCH DETAIL

NOT TO SCALE

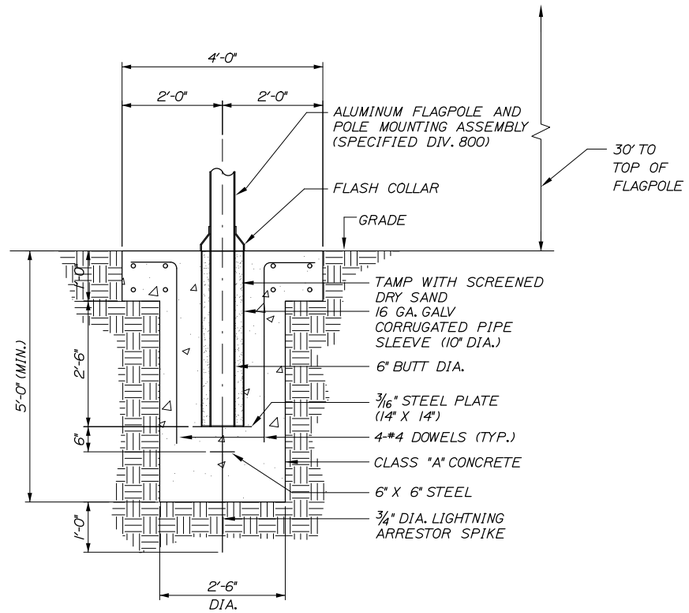

FLAGPOLE FOUNDATION DETAILS

1" = 2'-0"

NOTES:

1. BEDDING SHALL BE COMPATCTED TO A MINIMUM 95% STANDARD PROCTOR DENSITY. USE HAND TAMPERS OR VIBRATORY COMPACTORS.
2. FILTER FABRIC SHALL BE INSTALLED AGAINST THE TRENCH WALLS IN THE HAUNCHING AND BEDDING ZONES WHEN FINE SANDS, SILT, CLAY, OR ORGANIC MATERIALS ARE ENCOUNTERED AT THE TRENCH BOTTOM.
3. CONTRACTOR SHALL SHORE TRENCH SIDES WHEN REQUIRED OR AS DIRECTED BY THE RESIDENT.

Date:9/5/2015

Filename: 029_MiscDets.dgn

Scale: AS NOTED

No.	Revision	By	Date

Designed by: HNTB

CONSULTANT PROJECT MANAGER: R. Bruce Munger, P.E.

	By	Date		By	Date
Designed	CDH	08/15	Checked	CDH	08/15
Drawn	PMK	08/15	In Charge of	RAL	08/15

HNTB CORPORATION
340 County Road, Suite 6-C
Westbrook, ME 04092
TEL (207) 774-5155
FAX (207) 228-0909

MAINE TURNPIKE

THE GOLD STAR MEMORIAL HIGHWAY

MTA PROJECT MANAGER: William Yates

INTERCHANGES 32, 36, & 46 NB TOLL SYSTEM UPGRADES

INTERCHANGE 32 MISCELLANEOUS DETAILS

SHEET NUMBER: MD32-01

CONTRACT:2015.12

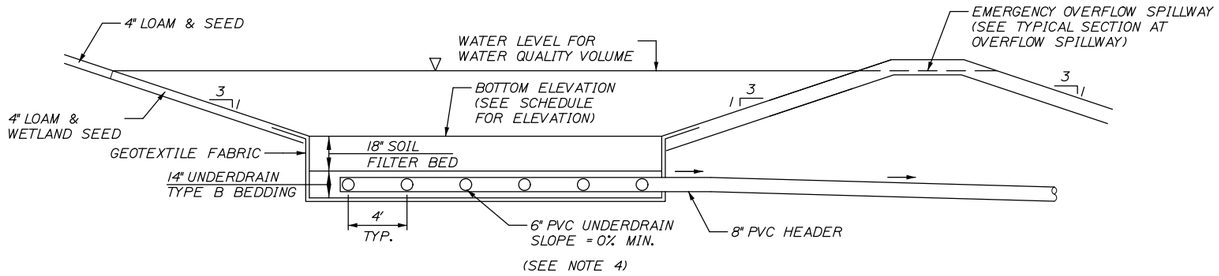

USF BASIN TYPICAL SECTION

NOT TO SCALE

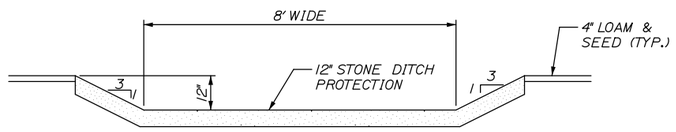

USF BASIN-EMERGENCY SPILLWAY SECTION A-A

NOT TO SCALE

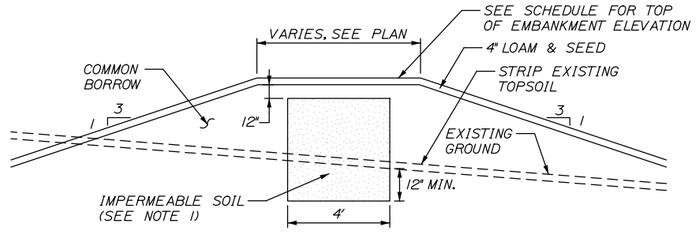

USF BASIN TYPICAL SECTION AT EMBANKMENTS

NOT TO SCALE

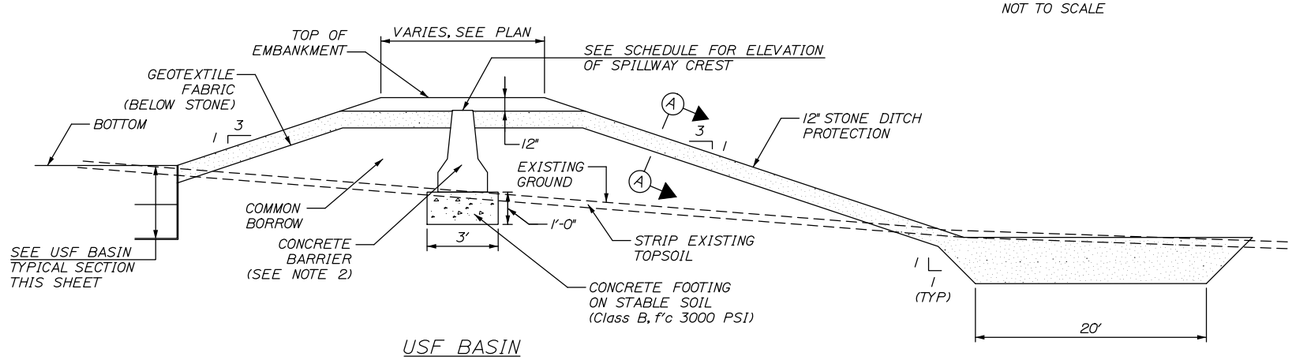

USF BASIN TYPICAL SECTION AT OVERFLOW SPILLWAY

NOT TO SCALE

USF BASIN SPECIFICATIONS:

1. SOIL FILTER BED MATERIAL SHALL BE A LIGHTLY COMPACTED THOROUGHLY BLENDED MIXTURE OF THE FOLLOWING:
   - SAND (50-55% BY VOLUME): MEDOT SPEC. 703.01 (FINE AGGREGATE FOR CONCRETE).
   - TOPSOIL (20-30% BY VOLUME): LOAMY SAND TOPSOIL W/ MINIMAL CLAY CONTENT & BETWEEN 15-25% FINES PASSING #200 SIEVE.
   - MULCH (20-30% BY VOLUME): MODERATELY FINE SHREDDED BARK MULCH OR WOOD FIBER MULCH W/ LESS THAN 5% PASSING #200 SIEVE.
2. UNDERDRAIN BACKFILL (BEDDING) SHALL BE WELL GRADED, CLEAN, COARSE GRAVEL MEETING MEDOT SPECIFICATION 703.22, TYPE B UNDERDRAIN BACKFILL. NO MORE THAN 2% BY WEIGHT SHALL PASS THE #200 SIEVE.
3. GEOTEXTILE FABRIC SHALL BE MEDOT SPECIFICATION 722.02, CLASS A DESIGNATION.
4. UNDERDRAIN PIPE SHALL BE PVC CONFORMING TO ASTM D3034, SDR 35. (UNDERDRAIN LATERALS SHALL BE 6" INCH SLOTTED PVC. 8 INCH PVC HEADER/OUTLET PIPE SHALL NOT BE SLOTTED.)
5. STONE DITCH PROTECTION FOR EMERGENCY SPILLWAY AND PIPE OUTLET/DITCH PROTECTION SHALL BE MEDOT SPECIFICATION 703.29, WITH 90-100% WEIGHT OF ROCK PASSING AN 8 INCH SIEVE AND 0-15% PASSING A 4 INCH SIEVE.
6. PRECAST CONCRETE BARRIER SHALL BE NEW, UNUSED (CLEAN) UNITS, 10 FOOT LONG EACH.
7. SURFACE OF SOIL FILTER SHALL BE PLANTED WITH WETLAND SEED "NEW ENGLAND EROSION CONTROL/RESTORATION MIX" AS SUPPLIED BY NEW ENGLAND WETLAND PLANTS, INC. SEED MIX SHALL BE APPLIED AT DOUBLE THE MANUFACTURERS APPLICATION RATE. SURFACE SHALL BE STABILIZED WITH AN APPROVED EROSION CONTROL MATTING.
8. IMPERMEABLE SOIL (EMBANKMENT CORE) SHALL BE MEDOT SPECIFICATION 203.245, CLAY BORROW.
9. STORMWATER FILTER SHALL BE CONSTRUCTED TO THE LIMITS AND DETAILS SHOWN ON THE PLANS AND THE ABOVE SPECIFICATIONS UNLESS OTHERWISE APPROVED BY THE RESIDENT.
10. FILTER BED MATERIAL SHALL NOT BE PLACED IN USF BASINS UNTIL THE TRIBUTARY DRAINAGE AREA IS PERMANENTLY STABILIZED AGAINST EROSION.
11. EROSION CONTROL BLANKETS CONFORMING TO MAINE DOT STANDARD DETAIL 802(02) SHALL BE PROVIDED ON ALL USF BASIN EMBANKMENT SLOPES, BOTH INTERIOR & EXTERIOR SLOPES.

NOTES:

1. AT EMERGENCY SPILLWAY, IMPERMEABLE SOIL (EMBANKMENT CORE) SHALL TIE INTO CONCRETE BARRIER AND EXTEND 3 FEET ALONG EACH END OF CONCRETE BARRIER.
2. SET TOP OF CONCRETE BARRIER LEVEL AND AT DESIGNATED ELEVATION OF SPILLWAY CREST.
3. FOR LAYOUT OF UNDERDRAIN SOIL FILTER (USF BASINS), SEE PROPOSED GRADING AND DRAINAGE PLANS.
4. FOR LAYOUT OF UNDERDRAIN PIPING, SEE PROPOSED GRADING AND DRAINAGE PLANS.
5. 6" PVC PIPE LOCATED BELOW SEDIMENT FOREBAY SHALL BE SOLID WALL PIPE.

USF BASIN SCHEDULE

USF Basin	Basin Elevations			Peak Water Surface Elevation		
	Bottom	Top of Embankment	Spillway Crest	2-year	10-year	25-year
	(feet)	(feet)	(feet)	(feet)	(feet)	(feet)
#1	89.50	91.50	90.50	90.56	90.84	90.93
#2	88.00	90.00	89.00	89.06	89.15	89.18

Scale: AS NOTED

Designed by: HNTB

No.	Revision	By	Date

CONSULTANT PROJECT MANAGER: R. Bruce Munger, P.E.

	By	Date		By	Date
Designed	CDH	08/15	Checked	CDH	08/15
Drawn	TJW	08/15	In Charge of	RAL	08/15

HNTB CORPORATION
340 County Road, Suite 6-C
Westbrook, ME 04092
TEL (207) 774-5155
FAX (207) 228-0909

MAINE TURNPIKE

THE GOLD STAR MEMORIAL HIGHWAY

MTA PROJECT MANAGER: William Yates

INTERCHANGES 32, 36, & 46 NB
TOLL SYSTEM UPGRADES

INTERCHANGE 32
USF DETENTION BASIN DETAILS

SHEET NUMBER: USF32-01

CONTRACT:2015.12

Date:9/5/2015

Filename: 030_USFDetentionBasinDetails.dgn

Date:9/5/2015

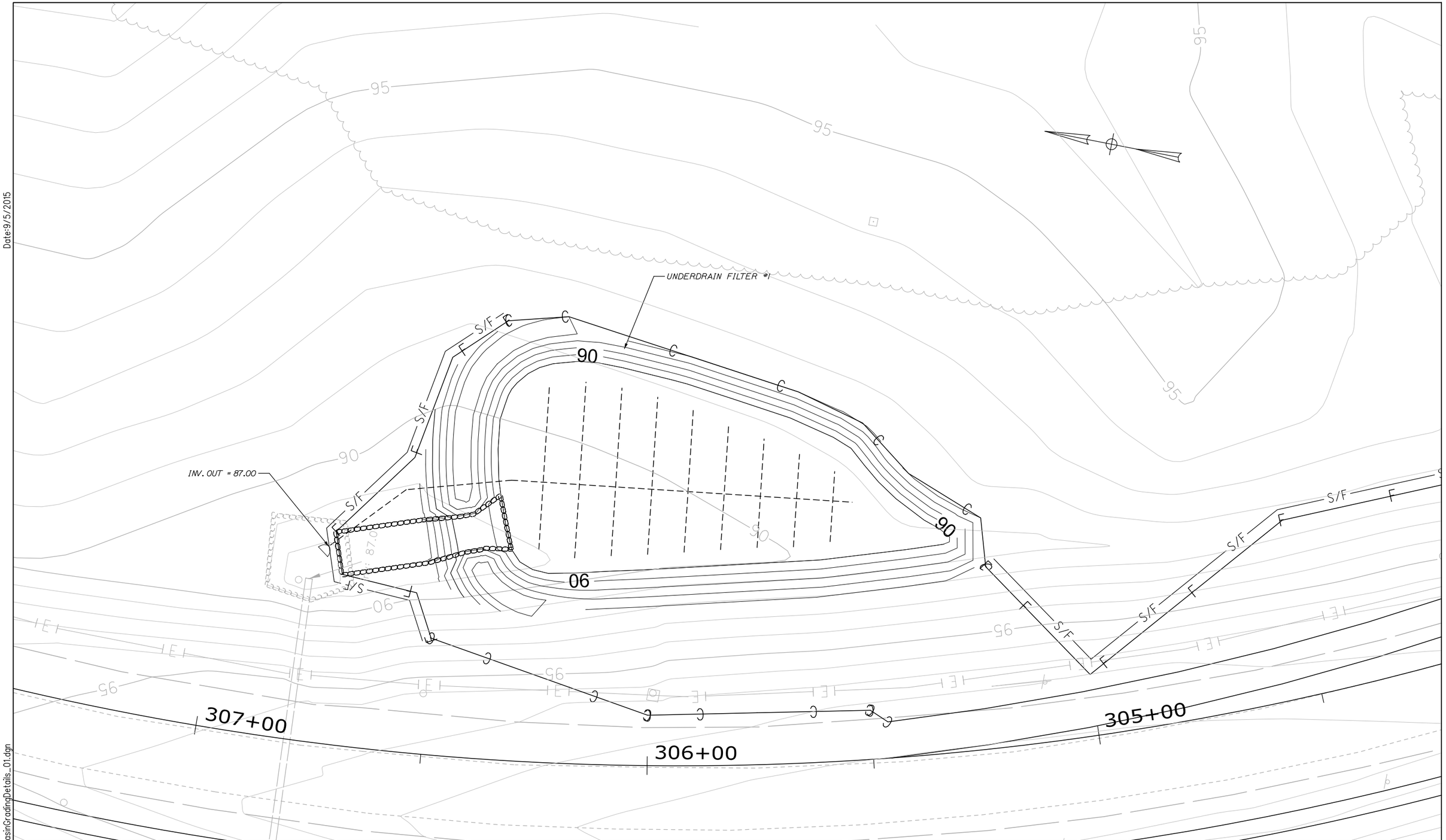

Filename: 031_USFDetentionBasinGradingDetails_01.dgn

Scale: 10 0 10 20
Scale of Feet

No.	Revision	By	Date

Designed by: HNTB

CONSULTANT PROJECT MANAGER: R. Bruce Munger, P.E.

	By	Date		By	Date
Designed	SA	08/15	Checked	HME	08/15
Drawn	SA	08/15	In Charge of	RAL	08/15

HNTB CORPORATION
340 County Road, Suite 6-C
Westbrook, ME 04092
TEL (207) 774-5155
FAX (207) 228-0909

MAINE TURNPIKE

THE GOLD STAR MEMORIAL HIGHWAY

MTA PROJECT MANAGER: William Yates

INTERCHANGES 32, 36, & 46 NB TOLL SYSTEM UPGRADES

INTERCHANGE 32
USF DETENTION BASIN GRADING DETAILS 1

SHEET NUMBER: USF32-02

CONTRACT:2015.12

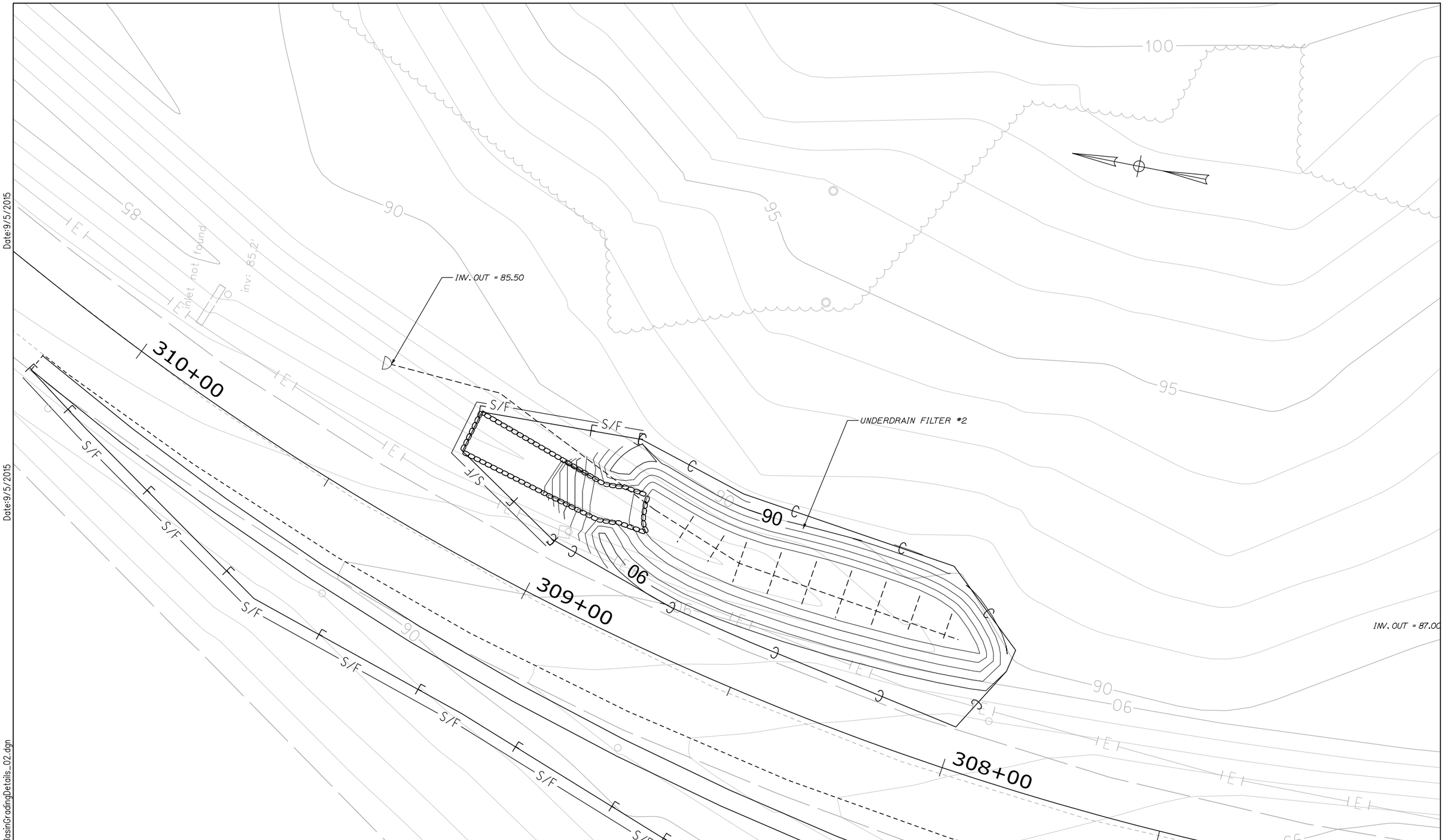

Date:9/5/2015

Date:9/5/2015

Filename: 032_USFDetentionBasinGradingDetails_02.dgn

Scale: 10 0 10 20 Scale of Feet

No.	Revision	By	Date

Designed by: HNTB

CONSULTANT PROJECT MANAGER: R. Bruce Munger, P.E.

	By	Date		By	Date
Designed	SA	08/15	Checked	HME	08/15
Drawn	SA	08/15	In Charge of	RAL	08/15

HNTB CORPORATION
340 County Road, Suite 6-C
Westbrook, ME 04092
TEL (207) 774-5155
FAX (207) 228-0909

MAINE TURNPIKE

THE GOLD STAR MEMORIAL HIGHWAY

MTA PROJECT MANAGER: William Yates

INTERCHANGES 32, 36, & 46 NB TOLL SYSTEM UPGRADES

INTERCHANGE 32

USF DETENTION BASIN GRADING DETAILS 2

SHEET NUMBER: USF32-02

CONTRACT:2015.12

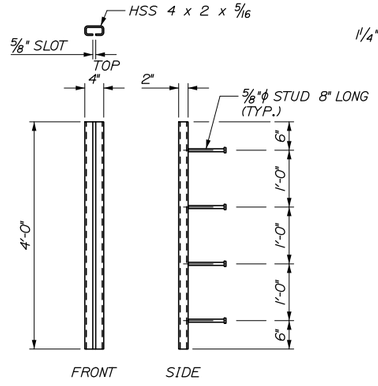

STRUCTURAL TUBE DETAILS

SCALE 1" = 1'

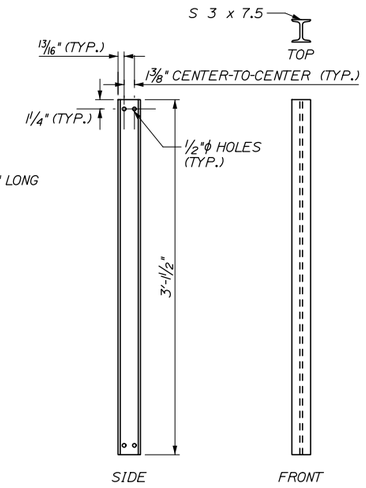

I-BEAM DETAILS

SCALE 1" = 1'

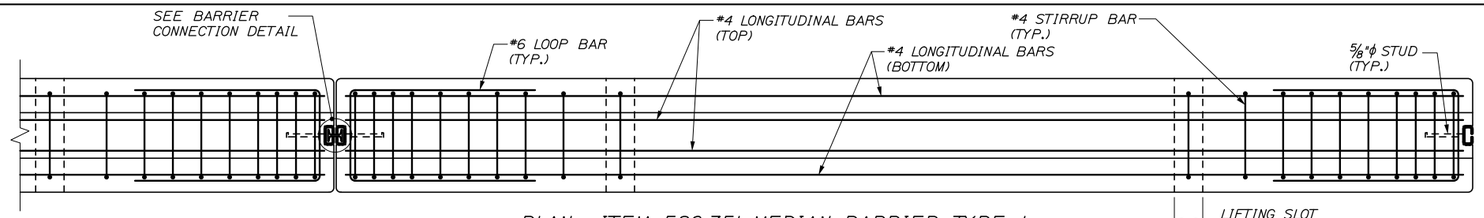

PLAN - ITEM 526.351, MEDIAN BARRIER TYPE 1

SCALE 1" = 1'

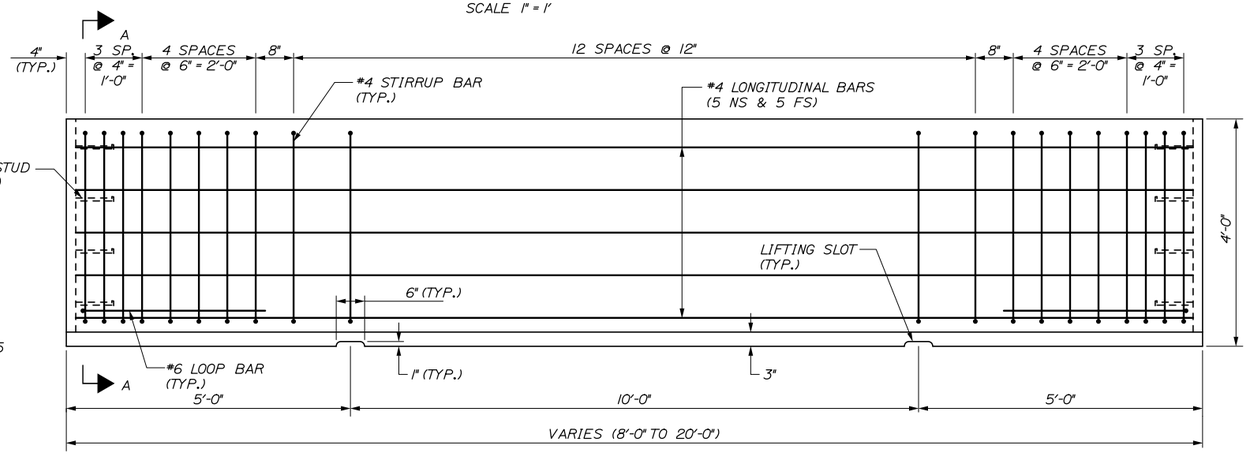

ELEVATION

SCALE 1" = 1'

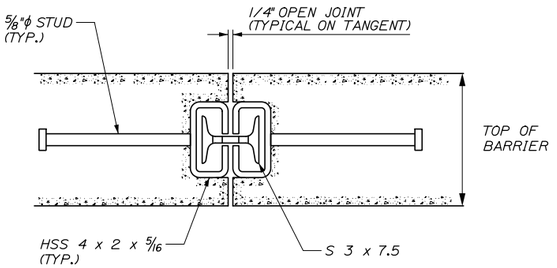

BARRIER CONNECTION DETAIL

SCALE 1/4" = 1'

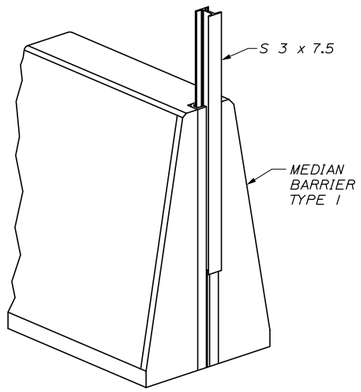

ISOMETRIC VIEW

N.T.S

BARRIER NOTES:

1. THE CONCRETE BARRIER DETAILS, AS SHOWN ON THIS SHEET, ARE IN COMPLIANCE WITH THE REQUIREMENTS OF NCHRP REPORT 350, TL 4.
2. I-BEAMS AND STRUCTURAL TUBES SHALL BE GALVANIZED AFTER FABRICATION.
3. EACH BARRIER UNIT SHALL INCLUDE ONE S 3 x 7.5 AS SHOWN ON THIS PLAN SHEET.
4. SHOP DRAWINGS SHALL INCLUDE REINFORCING SCHEDULE. CONTRACTOR SHALL PROVIDE SHOP DRAWING FOR ANGLE POINTS IN BARRIER.
5. MEDIAN BARRIER SHALL BE PAID FOR UNDER APPROPRIATE 526 ITEMS.
6. THE BARRIERS SHALL BE LIGHT COLORED CLASS "P" CONCRETE HAVING A MINIMUM 28 DAY COMPRESSION STRENGTH OF 4,500 PSI. BARRIERS SHALL HAVE A SMOOTH UNIFORM SURFACE FREE OF DEFECTS AND IRREGULARITIES. CASTING DATE SHALL BE SHOWN ON BARRIER. ALL EXPOSED EDGES OF CONCRETE SHALL BE CHAMFERED ¾", UNLESS NOTED OTHERWISE.
7. ALL REINFORCING STEEL SHALL BE AASHTO M31 (ASTM-A615) GRADE 60, EPOXY COATED. REINFORCEMENT SHOWN IS THE MINIMUM REQUIRED. EACH BARRIER UNIT SHALL INCLUDE ONE S 3 x 7.5 AS SHOWN ON THIS PLAN SHEET.
8. CLEAR PROTECTIVE COATING FOR CONCRETE SURFACES SHALL BE APPLIED ON-SITE AND APPROVED BY THE RESIDENT. COATING SHALL BE INCIDENTAL TO BARRIER.

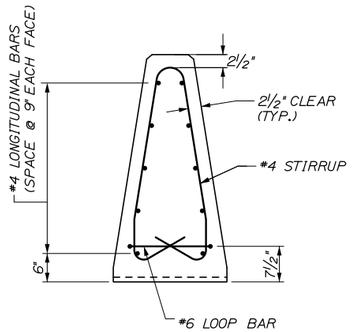

SECTION A-A (REINFORCEMENT)

SCALE 1" = 1'

MEDIAN BARRIER TYPE 1 REINFORCING SCHEDULE

DESCRIPTION	SIZE	NO.	UNBENT LENGTH	TYPE
LONGITUDINAL (EACH FACE)	#4	10	19'-8"	
STIRRUPS	#4	29	8'-11"	
LOOP BAR	#6	2	7'-11"	

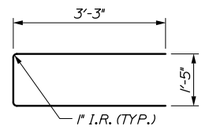

#6 LOOP BAR (TOP VIEW)
N.T.S

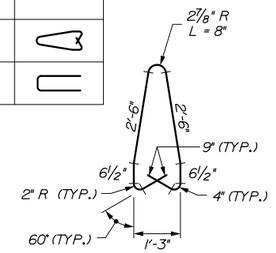

#4 STIRRUP BAR
N.T.S

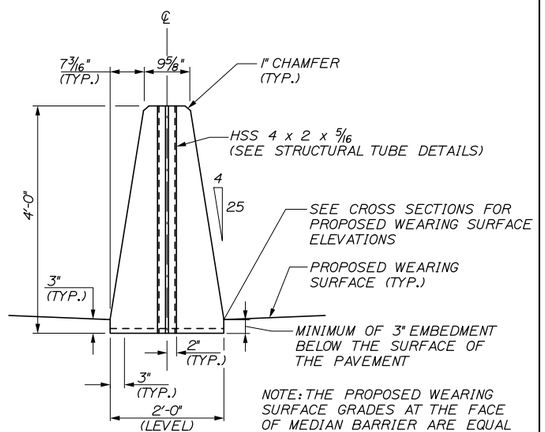

END VIEW (MASONRY)

SCALE 1" = 1'

Date:9/5/2015

Filename: 033_BarrierDet01.dgn

Scale: AS NOTED	Designed by: HNTB	HNTB CORPORATION 340 County Road, Suite 6-C Westbrook, ME 04092 TEL (207) 774-5155 FAX (207) 228-0909	MAINE TURNPIKE	THE GOLD STAR MEMORIAL HIGHWAY	INTERCHANGES 32, 36, & 46 NB TOLL SYSTEM UPGRADES
	CONSULTANT PROJECT MANAGER: R. Bruce Munger, P.E.				INTERCHANGE 36 BARRIER DETAILS 1
	Designed CDH 08/15 Checked CDH 08/15			MTA PROJECT MANAGER: William Yates	SHEET NUMBER: BD-01
	Drawn PDB 08/15 In Charge of RAL 08/15				CONTRACT:2015.12 33 OF 118

No.	Revision	By	Date

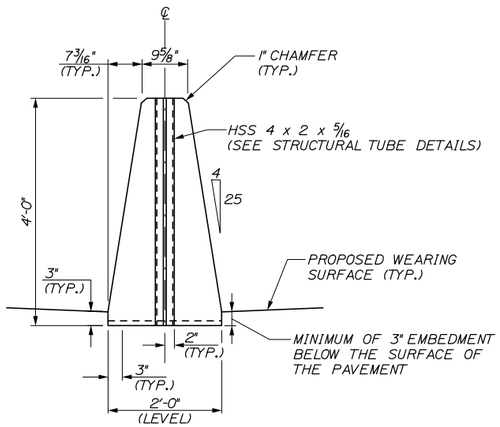

END VIEW (MASONRY)

SCALE 1" = 1'

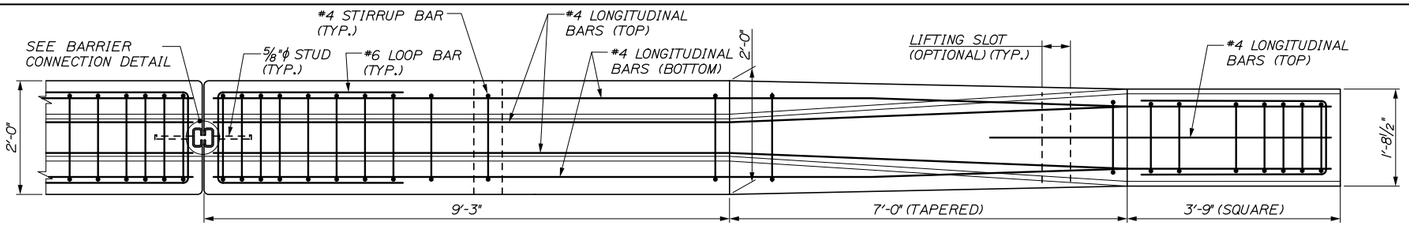

PLAN - ITEM 526.361, MEDIAN BARRIER TRANSITION TYPE I

SCALE 1" = 1'

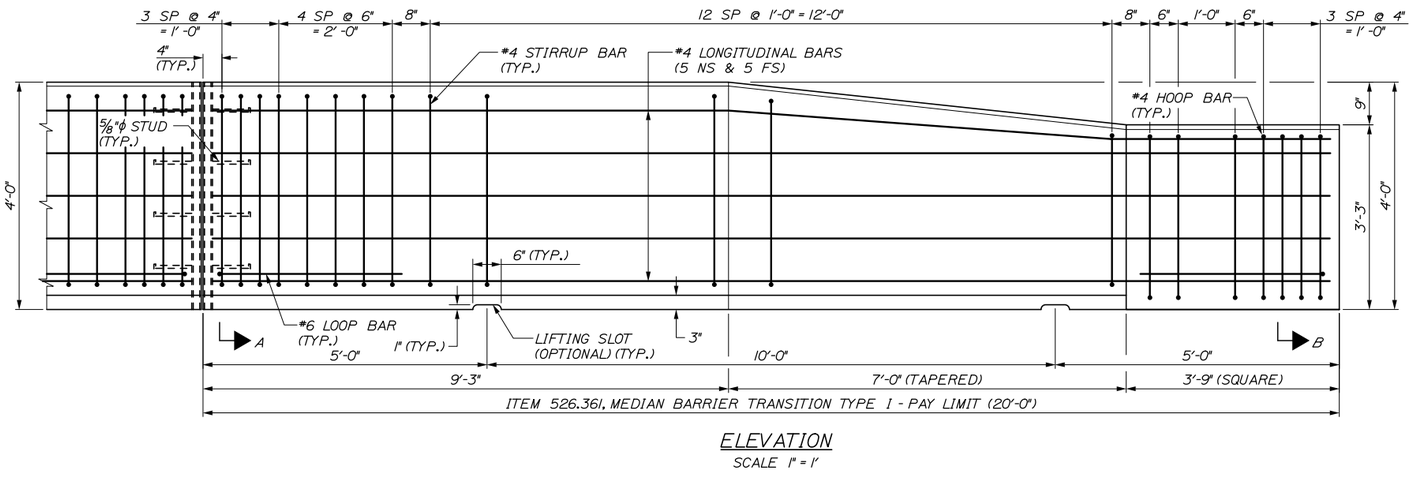

ELEVATION

SCALE 1" = 1'

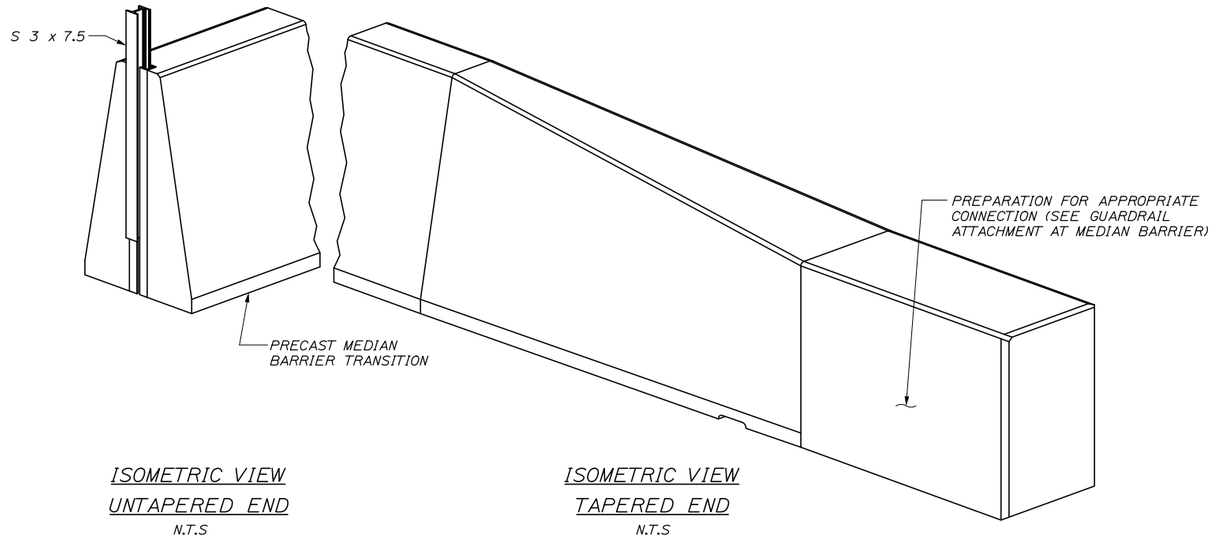

ISOMETRIC VIEW
UNTAPERED END

N.T.S

ISOMETRIC VIEW
TAPERED END

N.T.S

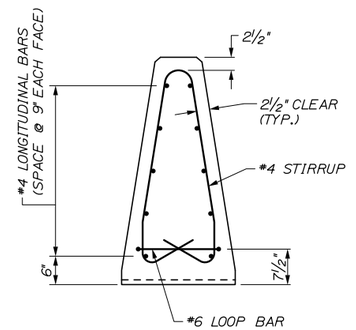

SECTION A-A (REINFORCEMENT)

SCALE 1" = 1'

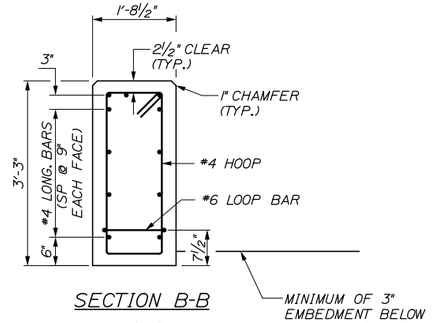

SECTION B-B (MASONRY & REINFORCEMENT)

SCALE 1" = 1'

1. SEE CONCRETE SHEET GD36-03 FOR NOTES AND BARRIER CONNECTION DETAILS.

2. PREPARATION OF SUBGRADE SHALL BE PERFORMED TO ENSURE PROPER HEIGHT OF CONNECTING GUARDRAIL PRIOR TO PLACING MEDIAN BARRIER TRANSITION.

Date:9/5/2015

Filename: 034_BarrierDet02.dgn

Scale: AS NOTED

No.	Revision	By	Date

Designed by: HNTB

CONSULTANT PROJECT MANAGER: R. Bruce Munger, P.E.

	By	Date		By	Date
Designed	CDH	08/15	Checked	CDH	08/15
Drawn	PDB	08/15	In Charge of	RAL	08/15

HNTB CORPORATION
340 County Road, Suite 6-C
Westbrook, ME 04092
TEL (207) 774-5155
FAX (207) 228-0909

MAINE TURNPIKE

THE GOLD STAR MEMORIAL HIGHWAY

MTA PROJECT MANAGER: William Yates

INTERCHANGES 32, 36, & 46 NB
TOLL SYSTEM UPGRADES

INTERCHANGE 36
BARRIER DETAILS 2

SHEET NUMBER: BD-02

CONTRACT:2015.12

Date:9/5/2015

MAINLINE CONSTRUCTION SIGN SUMMARY

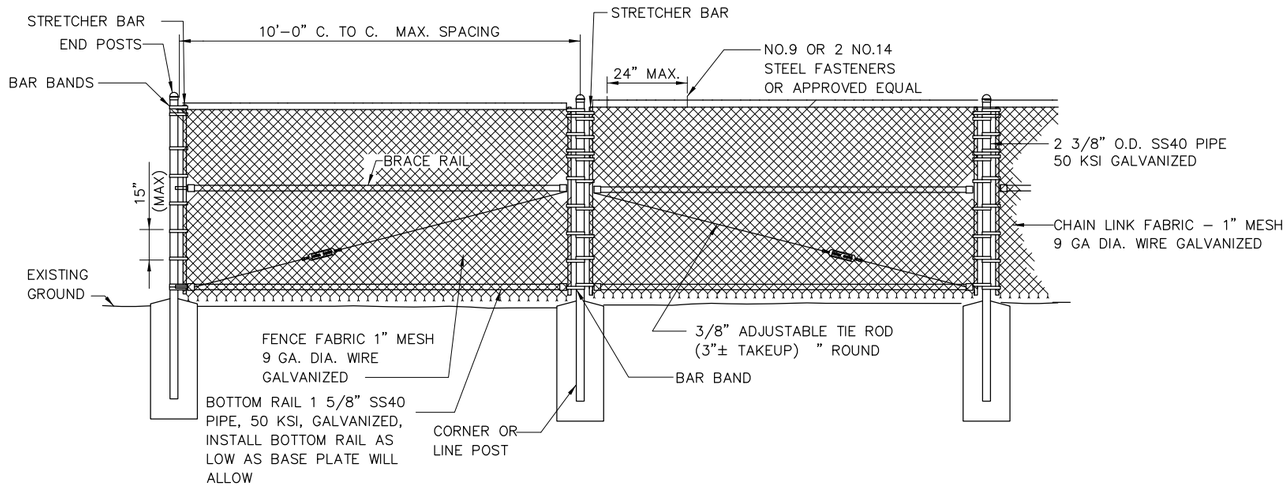

TYPICAL SNOW FENCE PLANEL

N.T.S.

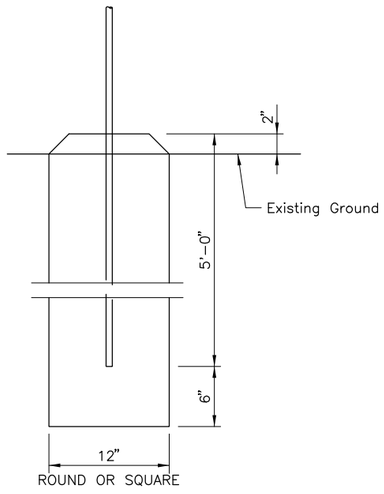

BRACE AND END POST BASE DETAIL

N.T.S.

BENDING MOMENTS BASED ON ASTM F1043, GROUP 1C
(SS 40 PIPE 50 KSI YIELD – GALVANIZED)

CHAIN LINK FENCE	SHAPE	NOMINAL SIZE (INCHES)	BENDING MOMENT (LBS.–IN.)
END & CORNER POSTS	ø	2–⅜" O.D.	24,405
LINE POSTS	ø	1–⅞" O.D.	14,050
TOP & BRACE RAILS	ø	1–⅝" O.D.	9,805

NOTES:

1. NO ADDITIONAL PAYMENT WILL BE MADE FOR LONGER POSTS NECESSITATED BY LARGE GRADE DIFFERENTIAL.
2. BRACING WILL BE USED FOR ALL FENCE SECTIONS.
3. WHEN LEDGE IS ENCOUNTERED, STEEL POSTS SHALL BE SET AND GROUTED 12" DEEP UNLESS THE POSTS PENETRATE THE GROUND TO THE DEPTH INDICATED ON THE DRAWINGS.
4. CONCRETE FOR POST FOUNDATION SHALL BE CLASS AAA.
5. BRACE AND END POSTS SHALL BE SET IN CONCRETE.
6. CHAIN LINK FENCE SHALL BE INSTALLED WITH BARBS DOWN.
7. ALL COMPONENTS OF CHAIN LINK FENCE SHALL BE IN ACCORDANCE WITH AASHTO M181.

Filename: 035_Chain_Link_Fence.DGN

Scale: N.T.S.

No.	Revision	By	Date

Designed by: HNTB

CONSULTANT PROJECT MANAGER: R. Bruce Munger, P.E.

	By	Date		By	Date
Designed	TJW	09/15	Checked	RBM	09/15
Drawn	TJW	09/15	In Charge of	RAL	09/15

HNTB CORPORATION
340 County Road, Suite 6-C
Westbrook, ME 04092
TEL (207) 774-5155
FAX (207) 228-0909

MAINE TURNPIKE

THE GOLD STAR MEMORIAL HIGHWAY

MTA PROJECT MANAGER: William Yates

INTERCHANGES 32, 36, & 46 NB TOLL SYSTEM UPGRADES

INTERCHANGE 36 SNOW FENCE DETAILS

SHEET NUMBER: FD36-01

CONTRACT:2015.12

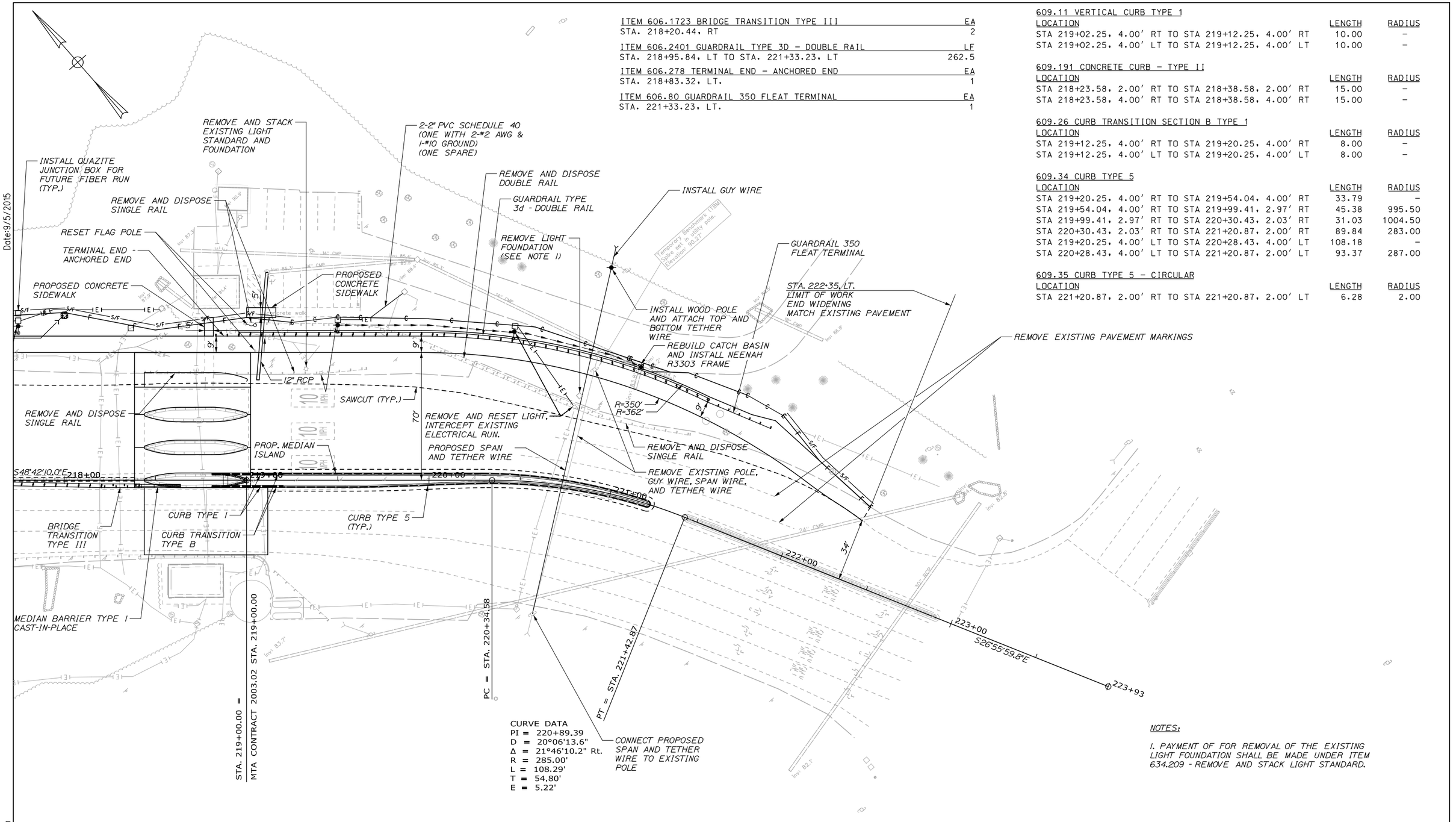

ITEM 606.1723 BRIDGE TRANSITION TYPE III	EA
STA. 218+20.44, RT	2
ITEM 606.2401 GUARDRAIL TYPE 3D - DOUBLE RAIL	LF
STA. 218+95.84, LT TO STA. 221+33.23, LT	262.5
ITEM 606.278 TERMINAL END - ANCHORED END	EA
STA. 218+83.32, LT.	1
ITEM 606.80 GUARDRAIL 350 FLEAT TERMINAL	EA
STA. 221+33.23, LT.	1

609.11 VERTICAL CURB TYPE 1

LOCATION	LENGTH	RADIUS
STA 219+02.25, 4.00' RT TO STA 219+12.25, 4.00' RT	10.00	-
STA 219+02.25, 4.00' LT TO STA 219+12.25, 4.00' LT	10.00	-

609.191 CONCRETE CURB - TYPE II

LOCATION	LENGTH	RADIUS
STA 218+23.58, 2.00' RT TO STA 218+38.58, 2.00' RT	15.00	-
STA 218+23.58, 4.00' RT TO STA 218+38.58, 4.00' RT	15.00	-

609.26 CURB TRANSITION SECTION B TYPE 1

LOCATION	LENGTH	RADIUS
STA 219+12.25, 4.00' RT TO STA 219+20.25, 4.00' RT	8.00	-
STA 219+12.25, 4.00' LT TO STA 219+20.25, 4.00' LT	8.00	-

609.34 CURB TYPE 5

LOCATION	LENGTH	RADIUS
STA 219+20.25, 4.00' RT TO STA 219+54.04, 4.00' RT	33.79	-
STA 219+54.04, 4.00' RT TO STA 219+99.41, 2.97' RT	45.38	995.50
STA 219+99.41, 2.97' RT TO STA 220+30.43, 2.03' RT	31.03	1004.50
STA 220+30.43, 2.03' RT TO STA 221+20.87, 2.00' RT	89.84	283.00
STA 219+20.25, 4.00' LT TO STA 220+28.43, 4.00' LT	108.18	-
STA 220+28.43, 4.00' LT TO STA 221+20.87, 2.00' LT	93.37	287.00

609.35 CURB TYPE 5 - CIRCULAR

LOCATION	LENGTH	RADIUS
STA 221+20.87, 2.00' RT TO STA 221+20.87, 2.00' LT	6.28	2.00

NOTES:

1. PAYMENT OF FOR REMOVAL OF THE EXISTING LIGHT FOUNDATION SHALL BE MADE UNDER ITEM 634.209 - REMOVE AND STACK LIGHT STANDARD.

Date:9/5/2015

Filename: 036_Exit32_HDPlan01.dgn

Scale: 25 0 25 50

No.	Revision	By	Date

Designed by: HNTB

CONSULTANT PROJECT MANAGER: R. Bruce Munger, P.E.

	By	Date		By	Date
Designed	CDH	08/15	Checked	CDH	08/15
Drawn	TJW	08/15	In Charge of	RAL	08/15

HNTB CORPORATION
340 County Road, Suite 6-C
Westbrook, ME 04092
TEL (207) 774-5155
FAX (207) 228-0909

MAINE TURNPIKE

THE GOLD STAR MEMORIAL HIGHWAY

MTA PROJECT MANAGER: William Yates

INTERCHANGES 32, 36, & 46 NB TOLL SYSTEM UPGRADES

INTERCHANGE 32 GENERAL PLAN 1

SHEET NUMBER: GP32-01

CONTRACT:2015.12

Date:9/5/2015

CURVE DATA
PI = 306+76.13
D = 8°57'08.9"
Δ = 76°24'38.9" Rt.
R = 640.00'
L = 853.52'
T = 503.73'
E = 174.46'

STA. 305+46, RT.
END WIDENING
MATCH EXISTING PAVEMENT

INSTALL QUAZITE JUNCTION BOX FOR FUTURE FIBER RUN (TYP.)

INSTALL PRECAST JUNCTION BOX

NORTHBOUND ON RAMP CONSTRUCTION ℄

22:1 TAPER

REMOVE AND RESET EXISTING LIGHT

2-2" PVC SCHEDULE 40 (ONE WITH 2-#2 AWG & 1-#10 GROUND) (ONE SPARE)

2-3" SCH. 40 PVC FOR FUTURE FIBER OPTIC USE

PC = STA. 301+72.40

INSTALL QUAZITE JUNCTION BOX FOR FUTURE FIBER RUN (TYP.)

REMOVE AND STACK EXISTING LIGHT STANDARD AND FOUNDATION

REMOVE AND DISPOSE SINGLE RAIL

RESET FLAG POLE

TERMINAL END - ANCHORED END

PROPOSED CONCRETE SIDEWALK

6" UD TYPE "B"

12" RCP

INTERCEPT EXISTING CONDUIT

2-2" PVC SCHEDULE 40 (ONE WITH 2-#2 AWG & 1-#10 GROUND) (ONE SPARE)

INSTALL LIGHT STANDARD AND PRECAST JUNCTION BOX (TYP.)

REMOVE EXIST. JUNCTION BOX

SAWCUT (TYP.)

ABANDON CONDUIT

REMOVE AND RESET EXISTING LIGHT

REMOVE AND DISPOSE SINGLE RAIL

PROP. MEDIAN ISLAND

S48°42'10.0"E

GUARDRAIL 350 FLEAT TERMINAL REMOVE AND RESET

REMOVE AND RESET SINGLE RAIL

MATCH EXISTING GUARDRAIL

REMOVE AND RESET DOUBLE RAIL (SEE NOTE 1)

NB ON RAMP CONSTRUCTION ℄ STA. 301+72.40 =
SB ON RAMP CONSTRUCTION ℄ STA. 217+27.60, 53.00' LT.

BRIDGE TRANSITION TYPE III

CURB TYPE 1

CURB TRANSITION TYPE B

S62°21'49.5"E

SOUTHBOUND ON RAMP CONSTRUCTION ℄

MEDIAN BARRIER TYPE 1 CAST-IN-PLACE

REMOVE AND RESET EXISTING LIGHT

CURVE DATA
PI = 216+26.07
D = 7°09'43.1"
Δ = 13°39'39.5" Rt.
R = 800.00'
L = 190.74'
T = 95.83'
E = 5.72'

PC = STA. 215+30.24

PT = STA. 217+20.99

STA. 219+00.00 = MTA CONTRACT 2003.02 STA. 219+00.00

STA. 212+54, LT.
LIMIT OF WORK
BEGIN WIDENING
MATCH EXISTING PAVEMENT

NOTES:

1. DOUBLE RAIL SHALL BE REMOVED PRIOR TO PHASE 2 AND RESET AFTER PHASE 3.

ITEM 606.3607 GUARDRAIL REMOVE AND RESET, SINGLE RAIL — LF
STA. 212+57.18, LT. TO STA. 213+06.87, LT. — 50

ITEM 606.3608 GUARDRAIL REMOVE AND RESET, DOUBLE RAIL — LF
STA. 214+70.18, RT. TO STA. 218+20.44, RT. — 350

ITEM 606.81 GUARDRAIL 350 FLEAT TERMINAL – REMOVE AND RESET — EA
STA. 213+06.87, LT. — 1

Scale: 25 0 25 50

No.	Revision	By	Date

Designed by: HNTB

CONSULTANT PROJECT MANAGER: R. Bruce Munger, P.E.

	By	Date		By	Date
Designed	CDH	08/15	Checked	CDH	08/15
Drawn	TJW	08/15	In Charge of	RAL	08/15

HNTB CORPORATION
340 County Road, Suite 6-C
Westbrook, ME 04092
TEL (207) 774-5155
FAX (207) 228-0909

MAINE TURNPIKE

THE GOLD STAR MEMORIAL HIGHWAY

MTA PROJECT MANAGER: William Yates

INTERCHANGES 32, 36, & 46 NB TOLL SYSTEM UPGRADES

INTERCHANGE 32 GENERAL PLAN 2

SHEET NUMBER: GP32-02

CONTRACT:2015.12

Filename: 037_Exit32_HDPlan02.dgn

Date:9/5/2015

CURVE DATA
PI = 313+10.78
D = 1°10'52.9"
Δ = 6°43'21.9" Rt.
R = 4850.00'
L = 569.07'
T = 284.86'
E = 8.36'

312+00
311+00
310+00
309+00
308+00
307+00
306+00
305+00
304+00

PCC = STA 310+25.92

STA. 310+17, LT.
LIMIT OF WORK
END WIDENING
MATCH EXISTING
PAVEMENT

INSTALL QUAZITE
JUNCTION BOX FOR
FUTURE FIBER
RUN (TYP.)

INSTALL LIGHT
STANDARD
AND PRECAST
JUNCION BOX (TYP.)

2-3" SCH. 40 PVC
FOR FUTURE FIBER
OPTIC USE

25:1 TAPER

SAWCUT
(TYP.)

14'
4'
10'
8'

NORTHBOUND ON RAMP CONSTRUCTION

CURVE DATA
PI = 306+76.13
D = 8°57'08.9"
Δ = 76°24'38.9" Rt.
R = 640.00'
L = 853.52'
T = 503.73'
E = 174.46'

STA. 305+46, RT.
END WIDENING
MATCH EXISTING PAVEMENT

INSTALL QUAZITE JUNCTION BOX
FOR FUTURE FIBER RUN (TYP.)

INSTALL PRECAST JUNCTION BOX

22:1 TAPER

2-2" PVC SCHEDULE 40
(ONE WITH 2-#2 AWG & 1-#10 GROUND)
(ONE SPARE)

INSTALL LIGHT STANDARD
AND PRECAST JUNCTION BOX
(TYP.)

18.0'
17.9'
16.8'
214 HDD

Scale: 25 0 25 50

No.	Revision	By	Date

Designed by: HNTB

CONSULTANT PROJECT MANAGER: R. Bruce Munger, P.E.

	By	Date		By	Date
Designed	CDH	08/15	Checked	CDH	08/15
Drawn	TJW	08/15	In Charge of	RAL	08/15

HNTB CORPORATION
340 County Road, Suite 6-C
Westbrook, ME 04092
TEL (207) 774-5155
FAX (207) 228-0909

MAINE TURNPIKE

THE GOLD STAR MEMORIAL HIGHWAY

MTA PROJECT MANAGER: William Yates

INTERCHANGES 32, 36, & 46 NB TOLL SYSTEM UPGRADES

INTERCHANGE 32
GENERAL PLAN 3

SHEET NUMBER: GP32-03

CONTRACT:2015.12

Filename: 038_Exit32_HDPlan03.dgn

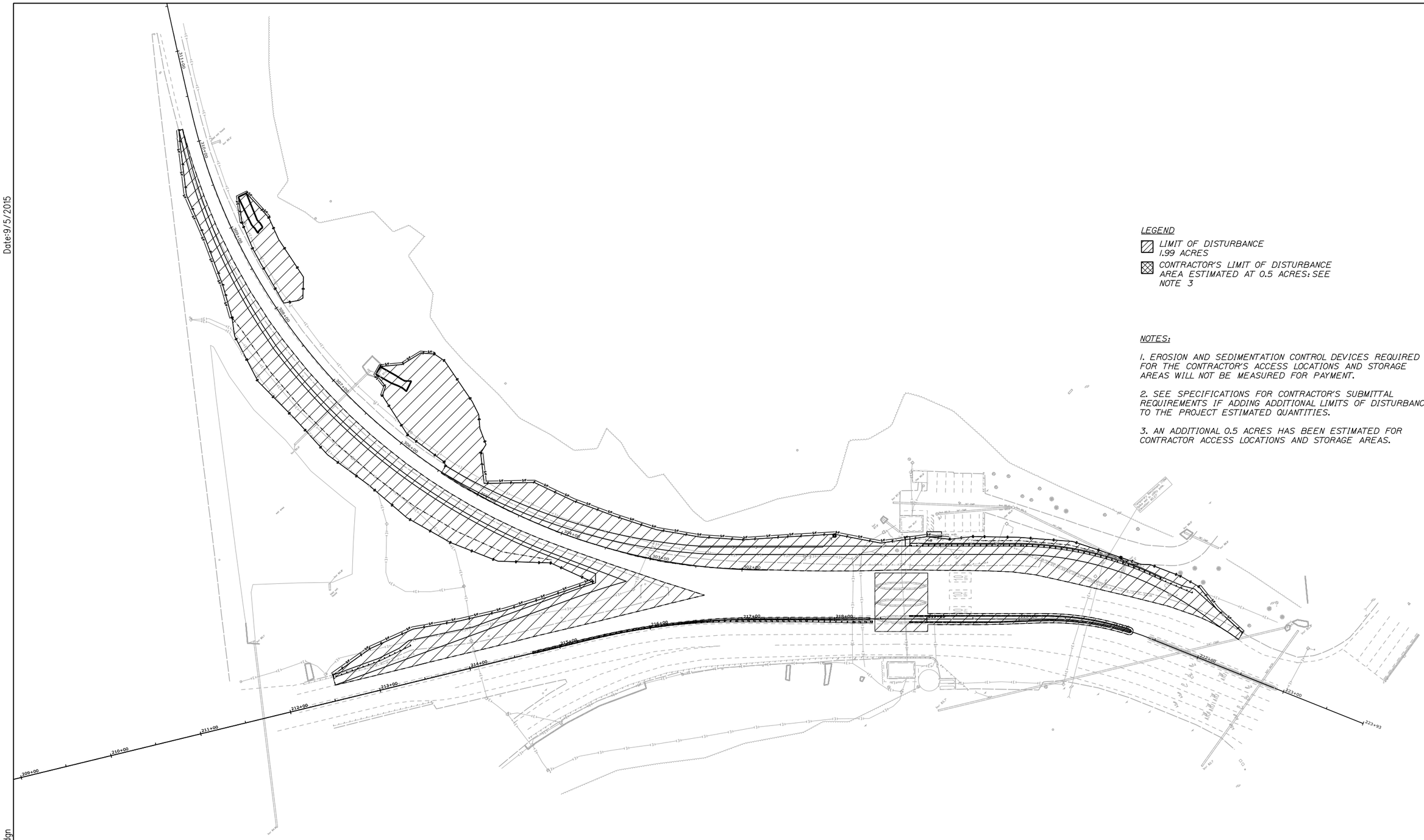

LEGEND

- *LIMIT OF DISTURBANCE 1.99 ACRES*
- *CONTRACTOR'S LIMIT OF DISTURBANCE AREA ESTIMATED AT 0.5 ACRES: SEE NOTE 3*

NOTES:

1. EROSION AND SEDIMENTATION CONTROL DEVICES REQUIRED FOR THE CONTRACTOR'S ACCESS LOCATIONS AND STORAGE AREAS WILL NOT BE MEASURED FOR PAYMENT.

2. SEE SPECIFICATIONS FOR CONTRACTOR'S SUBMITTAL REQUIREMENTS IF ADDING ADDITIONAL LIMITS OF DISTURBANCE TO THE PROJECT ESTIMATED QUANTITIES.

3. AN ADDITIONAL 0.5 ACRES HAS BEEN ESTIMATED FOR CONTRACTOR ACCESS LOCATIONS AND STORAGE AREAS.

Date:9/5/2015

Filename: 039_Exit32_LOD Plan.dgn

Scale: 50 0 50 100 Scale of Feet

No.	Revision	By	Date

Designed by: HNTB

CONSULTANT PROJECT MANAGER: R. Bruce Munger, P.E.

	By	Date		By	Date
Designed	CDH	08/15	Checked	CDH	08/15
Drawn	SLR	08/15	In Charge of	RAL	08/15

HNTB CORPORATION
340 County Road, Suite 6-C
Westbrook, ME 04092
TEL (207) 774-5155
FAX (207) 228-0909

MAINE TURNPIKE

THE GOLD STAR MEMORIAL HIGHWAY

MTA PROJECT MANAGER: William Yates

INTERCHANGES 32, 36, & 46 NB TOLL SYSTEM UPGRADES

INTERCHANGE 32 LIMITS OF DISTURBANCE PLAN

SHEET NUMBER: LOD32-01

CONTRACT:2015.12

Date:9/5/2015

CLEARANCE TURNPIKE STRUCTURES 13' - 6"

REMOVE & RESET PLAZA SIGN #6

REMOVE & RESET PLAZA SIGN #5

REMOVE & RESET PLAZA SIGN #3

EXISTING DYNAMIC MESSAGE SIGN TO REMAIN

REMOVE & RESET PLAZA SIGN #2

SPAN WIRE WITH TOP AND BOTTOM TETHER

Save time...save money E-ZPass 1-888-MTA-PASS

REMOVE & RESET PLAZA SIGN #7

SPEED LIMIT 10

FARE SCHEDULE SIGN

STOP

R1-1

E-ZPASS ACCEPTED ALL LANES

REMOVE & RESET PLAZA SIGN #1

E-ZPass KEEP LEFT | CASH KEEP RIGHT

SP-1

10 MPH

S48°42'10.0"E

218+00

219+88

220+00

221+00

222+00

223+00

S26°55'59.8"E

223+93

DO NOT ENTER

R5-1

R3-5L ONLY

R3-6L ONLY

R3-5a ONLY

R3-5R ONLY

R3-5R ONLY

REMOVE AND STACK OVERHEAD SIGNS

RETAIN

REMOVE & RESET PLAZA SIGN #4

WRONG WAY

R5-1a

NO PARKING ANY TIME

RETAIN

NO U TURN

REMOVE & STACK

KENNEBUNK
BIDDEFORD CTR.
ALFRED
SANFORD

RETAIN

Save time... save money E-ZPass 1-888-MTA-PASS

NO PARKING

RETAIN

SOUTHERN MAINE VETERANS CEMETERY 17 1/4

RETAIN

EAST WEST

BIDDEFORD CONNECTOR

RETAIN

PARK & RIDE

RETAIN

RETAIN

DO NOT ENTER

R5-1

RETAIN

Filename: 040_Exit32_SSPlan01.dgn

Scale: 25 0 25 50

No.	Revision	By	Date

Designed by: HNTB

CONSULTANT PROJECT MANAGER: R. Bruce Munger, P.E.

	By	Date		By	Date
Designed	WA	08/15	Checked	CDH	08/15
Drawn	CNP	08/15	In Charge of	RAL	08/15

HNTB CORPORATION
340 County Road, Suite 6-C
Westbrook, ME 04092
TEL (207) 774-5155
FAX (207) 228-0909

MAINE TURNPIKE

THE GOLD STAR MEMORIAL HIGHWAY

MTA PROJECT MANAGER: William Yates

INTERCHANGES 32, 36, & 46 NB TOLL SYSTEM UPGRADES

INTERCHANGE 32

SIGNING AND STRIPING PLAN 1

SHEET NUMBER: SS32-01

CONTRACT:2015.12

Date:9/5/2015

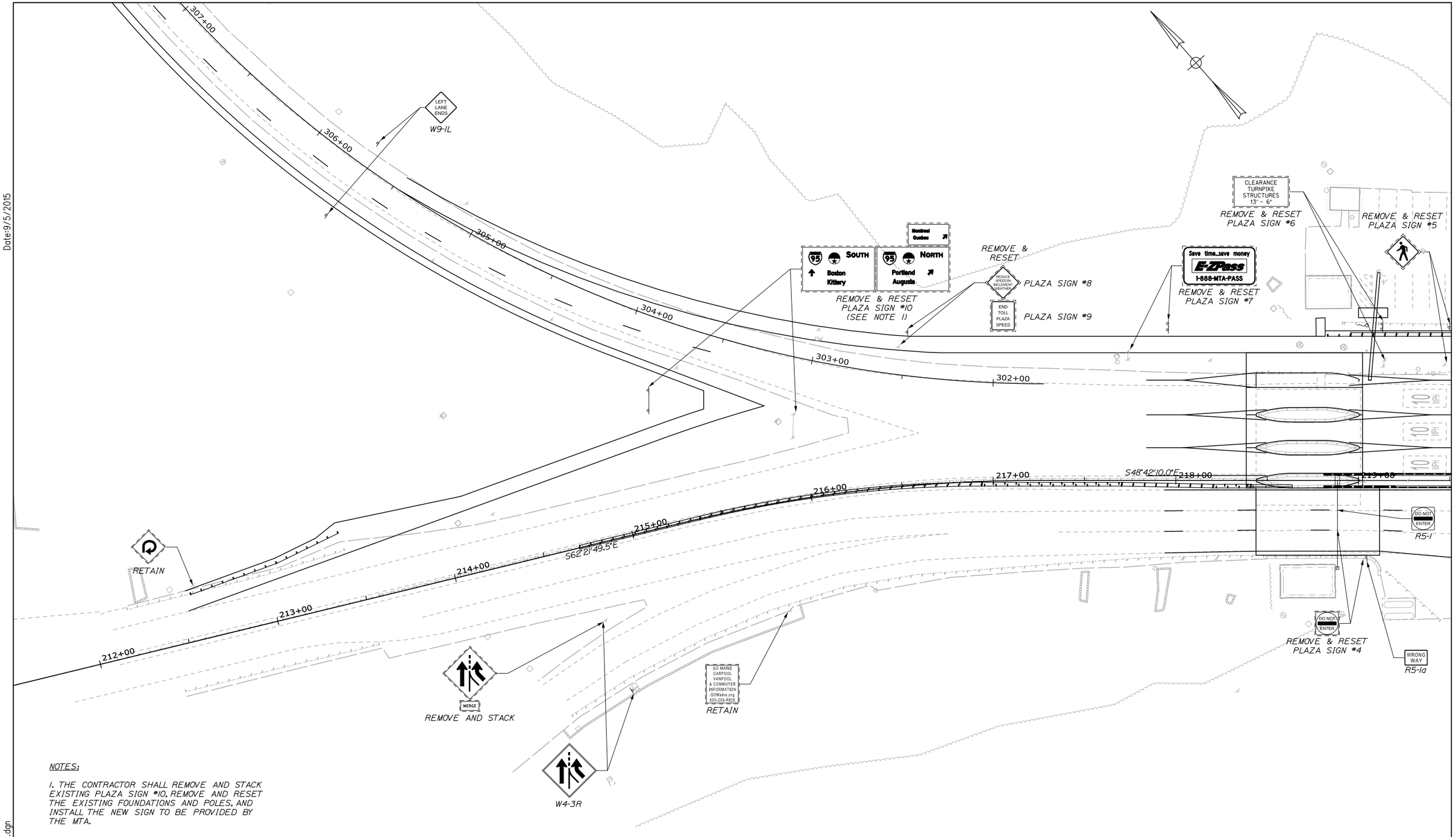

NOTES:

1. THE CONTRACTOR SHALL REMOVE AND STACK EXISTING PLAZA SIGN #10. REMOVE AND RESET THE EXISTING FOUNDATIONS AND POLES, AND INSTALL THE NEW SIGN TO BE PROVIDED BY THE MTA.

Filename: 041_Exit32_SSPlan02.dgn

Scale: 25 0 25 50

No.	Revision	By	Date

Designed by: HNTB

CONSULTANT PROJECT MANAGER: R. Bruce Munger, P.E.

	By	Date		By	Date
Designed	WA	08/15	Checked	CDH	08/15
Drawn	CNP	08/15	In Charge of	RAL	08/15

HNTB CORPORATION
340 County Road, Suite 6-C
Westbrook, ME 04092
TEL (207) 774-5155
FAX (207) 228-0909

MAINE TURNPIKE

THE GOLD STAR MEMORIAL HIGHWAY

MTA PROJECT MANAGER: William Yates

INTERCHANGES 32, 36, & 46 NB TOLL SYSTEM UPGRADES

INTERCHANGE 32 SIGNING AND STRIPING PLAN 2

SHEET NUMBER: SS32-02

CONTRACT:2015.12

Date:9/5/2015

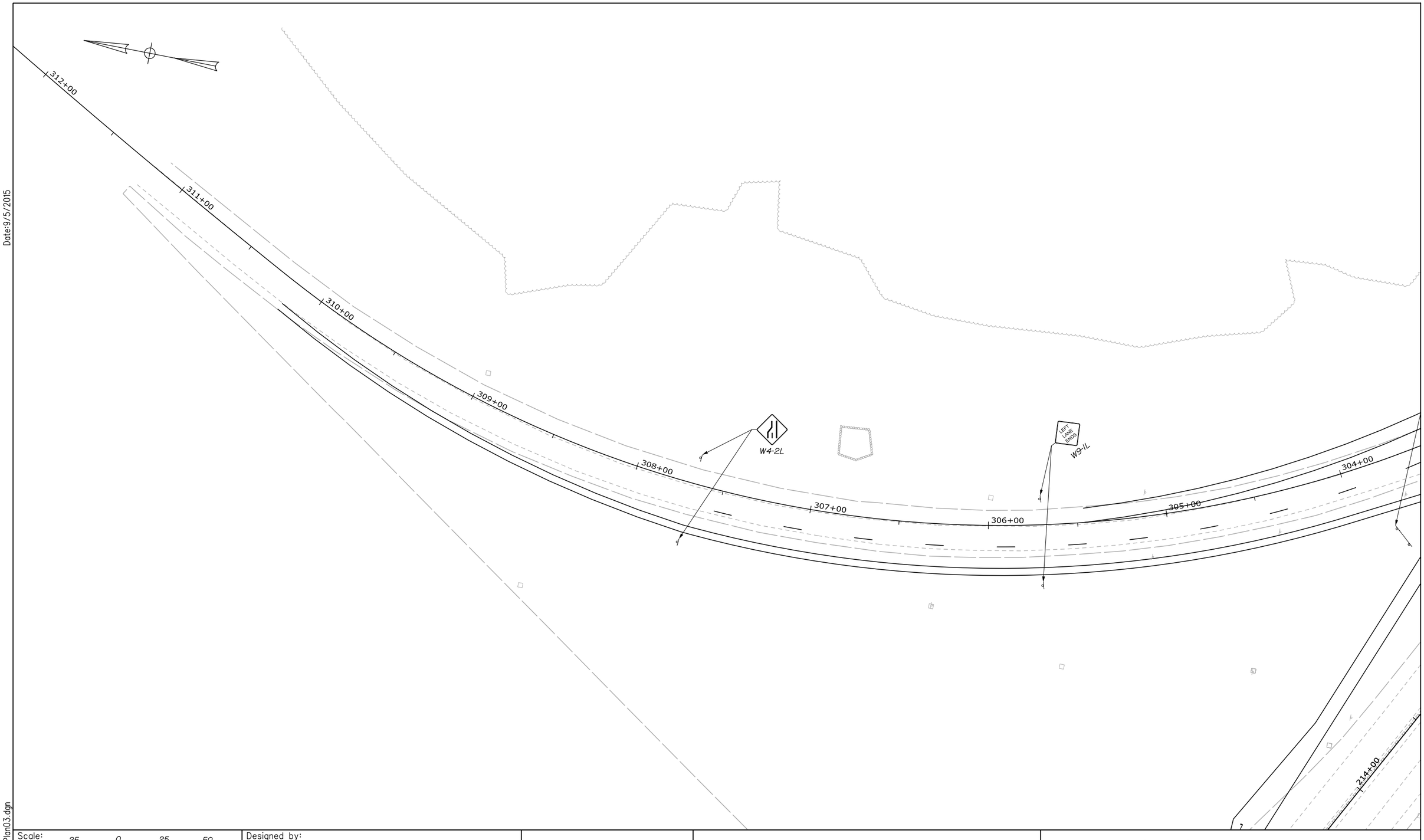

Filename: 042_Exit32_SSPlan03.dgn

Scale: 25 0 25 50

No.	Revision	By	Date

Designed by: HNTB

CONSULTANT PROJECT MANAGER: R. Bruce Munger, P.E.

	By	Date		By	Date
Designed	WA	08/15	Checked	CDH	08/15
Drawn	CNP	08/15	In Charge of	RAL	08/15

HNTB CORPORATION
340 County Road, Suite 6-C
Westbrook, ME 04092
TEL (207) 774-5155
FAX (207) 228-0909

MAINE TURNPIKE

THE GOLD STAR MEMORIAL HIGHWAY

MTA PROJECT MANAGER: William Yates

INTERCHANGES 32, 36, & 46 NB TOLL SYSTEM UPGRADES

INTERCHANGE 32 SIGNING AND STRIPING PLAN 3

SHEET NUMBER: SS32-03

CONTRACT:2015.12

INTERCHANGE 32 - REMOVE & STACK SIGN SUMMARY

IDENTIFICATION NUMBER	DESCRIPTION	QUANTITY	COLOR		SIGN SIZE			STATIONS	OFFSET (FROM BASELINE TO SIGN CENTER)	PAY ITEM NUMBER
			BACK-GROUND	LEGEND	HEIGHT (IN)	WIDTH (IN)	AREA (SQ. FT.)			
R4-7		1	WHITE	BLACK	48	36	12.00	221+50	0'	645.105
R3-3a		1	WHITE	BLACK	18	24	3.00	221+50	0'	645.105
R3-5L		1	WHITE	BLACK	30	36	7.5	220+73	8.9' LT	645.105
R3-6L		1	WHITE	BLACK	30	36	7.5	220+71	21.2' LT	645.105
R3-5A		1	WHITE	BLACK	30	36	7.5	220+70	33.2' LT	645.105
R3-5R		1	WHITE	BLACK	30	36	7.5	220+68	44.9' LT	645.105
R3-5R		1	WHITE	BLACK	30	36	7.5	220+66	56.3' LT	645.105
W4-3		1	YELLOW	BLACK	48	48	16.00	214+74	41.8' LT	645.105

Date:9/5/2015

Date:9/5/2015

Filename: 043_Exit32_SSum01.dgn

Scale: N.T.S.

No.	Revision	By	Date

Designed by: HNTB

CONSULTANT PROJECT MANAGER: R. Bruce Munger, P.E.

	By	Date		By	Date
Designed	TMH	08/15	Checked	CDH	08/15
Drawn	PMK	08/15	In Charge of	RAL	08/15

HNTB CORPORATION
340 County Road, Suite 6-C
Westbrook, ME 04092
TEL (207) 774-5155
FAX (207) 228-0909

MAINE TURNPIKE

THE GOLD STAR MEMORIAL HIGHWAY

MTA PROJECT MANAGER: William Yates

INTERCHANGES 32, 36, & 46 NB
TOLL SYSTEM UPGRADES

INTERCHANGE 32
SIGN SUMMARY 1

SHEET NUMBER: SSUM32-01

CONTRACT:2015.12

INTERCHANGE 32 - REMOVE & RESET SIGN SUMMARY

DESCRIPTION	EXISTING							PROPOSED							
	SIGN SIZE			NUMBER AND TYPE OF POSTS	COLOR		LOCATION	NUMBER OF POSTS	POST SIZE	HEIGHT OF POST		FOUNDATION SIZE AND TYPE	BREAKAWAY DEVICE	LOCATION	PAY ITEM
	HEIGHT (IN)	WIDTH (IN)	AREA (SQ. FT.)		BACK-GROUND	LEGEND				LEFT (FEET)	RIGHT (FEET)				
PLAZA SIGN #1	36	48	12.00	1 WOOD	GREEN	WHITE	221+54	1	WOOD 6X6	9.0'	-	--	NO	221+29	645.109
PLAZA SIGN #2	48 36	60 48	20.00 12.00	2 WOOD	YELLOW	BLACK	220+86	2	WOOD 6X6	9.0'	9.0'	--	NO	220+86	645.109
PLAZA SIGN #3	12 30	24 24	2.00 5.00	1 STEEL	YELLOW WHITE	BLACK BLACK	219+82 219+82	1	WOOD 6X6	10'	--	--	NO	219+88	645.109
PLAZA SIGN #4	36	36	9.00	1 WOOD	RED	WHITE	219+04	GUY WIRE	--	--	--	--	NO	218+89	645.109
PLAZA SIGN #5	36	36	9.00	1 WOOD	YELLOW	BLACK	219+47	1	WOOD 6X6	9.0'	--	--	NO	219+50	645.109
PLAZA SIGN #6	72	60	30.00	2 WOOD	YELLOW	BLACK	219+14	2	WOOD 6X6	14.0	14.0	--	NO	219+13	645.109
PLAZA SIGN #7	48	60	20.00	2 WOOD	PURPLE	WHITE	217+74	1	W6X15	10.0'	--	18" DIAM	YES	217+96	645.109
PLAZA SIGN #8	48	48	16.00	1 WOOD	YELLOW	BLACK	216+54	1	W6X9	9.0'	--	18" DIAM	YES	216+60	645.109
PLAZA SIGN #9	36	24	6.00	1 WOOD	WHITE	BLACK	216+54	1	MOUNTED TO PLAZA SIGN #8	--	--	--	--	216+60	645.109
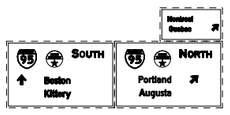 *PLAZA SIGN #10	24 60	48 180	8.00 75.00	2 STEEL	GREEN	WHITE	215+96	2	W10X22	10.0'	10.0'	24" DIAM	YES	215+35	645.109

*PROVIDED BY THE MTA

Date:9/5/2015

Date:9/5/2015

Filename: 044_Exit32_SSum02.dgn

Scale: N.T.S.

No.	Revision	By	Date

Designed by: HNTB

CONSULTANT PROJECT MANAGER: R. Bruce Munger, P.E.

	By	Date		By	Date
Designed	TMH	08/15	Checked	CDH	08/15
Drawn	PMK	08/15	In Charge of	RAL	08/15

HNTB CORPORATION
340 County Road, Suite 6-C
Westbrook, ME 04092
TEL (207) 774-5155
FAX (207) 228-0909

MAINE TURNPIKE

THE GOLD STAR MEMORIAL HIGHWAY

MTA PROJECT MANAGER: William Yates

INTERCHANGES 32, 36, & 46 NB
TOLL SYSTEM UPGRADES

INTERCHANGE 32
SIGN SUMMARY 2

SHEET NUMBER: SSUM32-02

CONTRACT:2015.12

INTERCHANGE 32 - PROPOSED SPAN WIRE MOUNTED SIGN SUMMARY

DESCRIPTION	EXISTING							PROPOSED		
	SIGN SIZE			NUMBER AND TYPE OF POSTS	COLOR		LOCATION	STATIONS	OFFSET (FROM BASELINE TO SIGN CENTER)	PAY ITEM
	HEIGHT (IN)	WIDTH (IN)	AREA (SQ. FT.)		BACK-GROUND	LEGEND				
ONLY *R3-5L	30	36	7.5	GUY WIRE	WHITE	BLACK	GUY WIRE	220+73	8.9' LT	645.271
*R3-6L	30	36	7.5	GUY WIRE	WHITE	BLACK	GUY WIRE	220+71	21.2' LT	645.271
ONLY *R-35a	30	36	7.5	GUY WIRE	WHITE	BLACK	GUY WIRE	220+70	33.2' LT	645.271
ONLY *R3-5R	30	36	7.5	GUY WIRE	WHITE	BLACK	GUY WIRE	220+68	44.9' LT	645.271
ONLY *R3-5R	30	36	7.5	GUY WIRE	WHITE	BLACK	GUY WIRE	220+66	56.3' LT	645.271

*ALL SPAN WIRE MOUNTED SIGNS SHALL HAVE WIND HOLES

INTERCHANGE 32 - PROPOSED GROUND MOUNTED SIGN SUMMARY

IDENTIFICATION NUMBER	DESCRIPTION	QUANTITY	COLOR		SIGN SIZE			NUMBER OF POSTS	POST SIZE	HEIGHT OF POST*			FOUNDATION SIZE AND TYPE	BREAKAWAY DEVICE	STATIONS	OFFSET (FROM BASELINE TO SIGN CENTER)	PAY ITEM NUMBER
			BACK-GROUND	LEGEND	HEIGHT (IN)	WIDTH (IN)	AREA (SQ. FT.)			LEFT (FEET)	CENTER (FEET)	RIGHT (FEET)					
SP-1	E-ZPass KEEP LEFT / CASH KEEP RIGHT	1	YELLOW	BLACK	36	66	16.50	1	WOOD 6X6		9.0'		--	NO	222+78	44' RT	645.251
R5-1	DO NOT ENTER	3	RED	WHITE	36	36	9.00	1	WOOD 6X6		9.0'		--	NO NO NO	222+49 222+49 218+88	0' 76.6' RT 16.1' RT	645.271
R5-1a	WRONG WAY	1	RED	WHITE	30	42	8.75	1	WOOD 6X6		8.5'		--	NO	219+04	42.4' RT	645.271
W9-1L	LEFT LANE ENDS	2	YELLOW	BLACK	48	48	16.00	1	W6X9		9.0'		18"	YES YES	305+70 305+70	14.5' RT 34.0' LT	645.271
W4-2L		2	YELLOW	BLACK	48	48	16.00	1	W6X9		9.0'		18"	YES YES	307+67 307+67	14.8' RT 34.0' LT	645.271
W4-3		2	YELLOW	BLACK	48	48	16.00	1	W6X9		9.0'		18"	YES YES	214+79 214+74	82.8' LT 41.8' LT	645.271
R1-1	STOP	1	RED	WHITE	36	36	9.00	1	WOOD 6X6		9.0'		--	NO	221+83	164.5' RT	645.271

Date:9/5/2015

Date:9/5/2015

Filename: 045_Exit32_SSum03.dgn

Scale: N.T.S.

No.	Revision	By	Date

Designed by: HNTB

CONSULTANT PROJECT MANAGER: R. Bruce Munger, P.E.

	By	Date		By	Date
Designed	TMH	08/15	Checked	CDH	08/15
Drawn	PMK	08/15	In Charge of	RAL	08/15

HNTB CORPORATION
340 County Road, Suite 6-C
Westbrook, ME 04092
TEL (207) 774-5155
FAX (207) 228-0909

MAINE TURNPIKE

THE GOLD STAR MEMORIAL HIGHWAY

MTA PROJECT MANAGER: William Yates

INTERCHANGES 32, 36, & 46 NB
TOLL SYSTEM UPGRADES

INTERCHANGE 32
SIGN SUMMARY 3

SHEET NUMBER: SSUM32-03

CONTRACT:2015.12

Date:9/5/2015

C= 17.00 CY
F= 0.00 CY
G= 3.00 CY

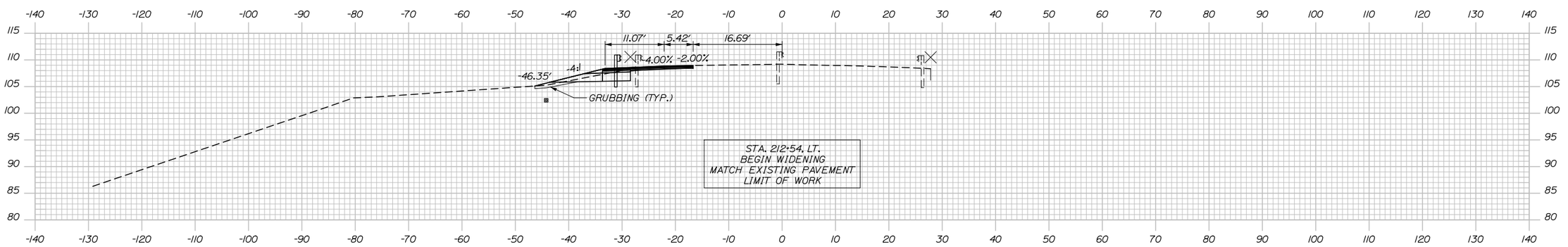

213+00.00

C= 0.00 CY
F= 0.00 CY
G= 0.00 CY

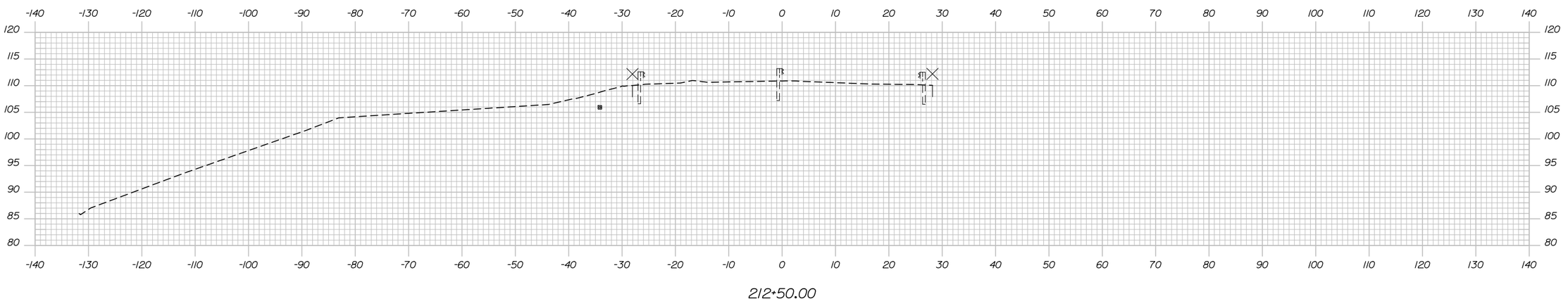

212+50.00

Filename: 046_Exit32_Xsect.dgn

Scale:

No.	Revision	By	Date

Designed by: HNTB

CONSULTANT PROJECT MANAGER: R. BRUCE MUNGER, P.E.

	By	Date		By	Date
Designed	TJW	08/15	Checked	CDH	08/15
Drawn	TJW	08/15	In Charge of	RAL	08/15

HNTB CORPORATION
340 County Road, Suite 6-C
Westbrook, ME 04092
TEL (207) 774-5155
FAX (207) 228-0909

MAINE TURNPIKE

THE GOLD STAR MEMORIAL HIGHWAY

MTA PROJECT MANAGER: William Yates

INTERCHANGES 32, 36, & 46 NB TOLL SYSTEM UPGRADES

INTERCHANGE 32 CROSS SECTIONS STA. 212+50 TO STA. 213+00

SHEET NUMBER: XS32-01

CONTRACT:2015.12

Date:9/5/2015

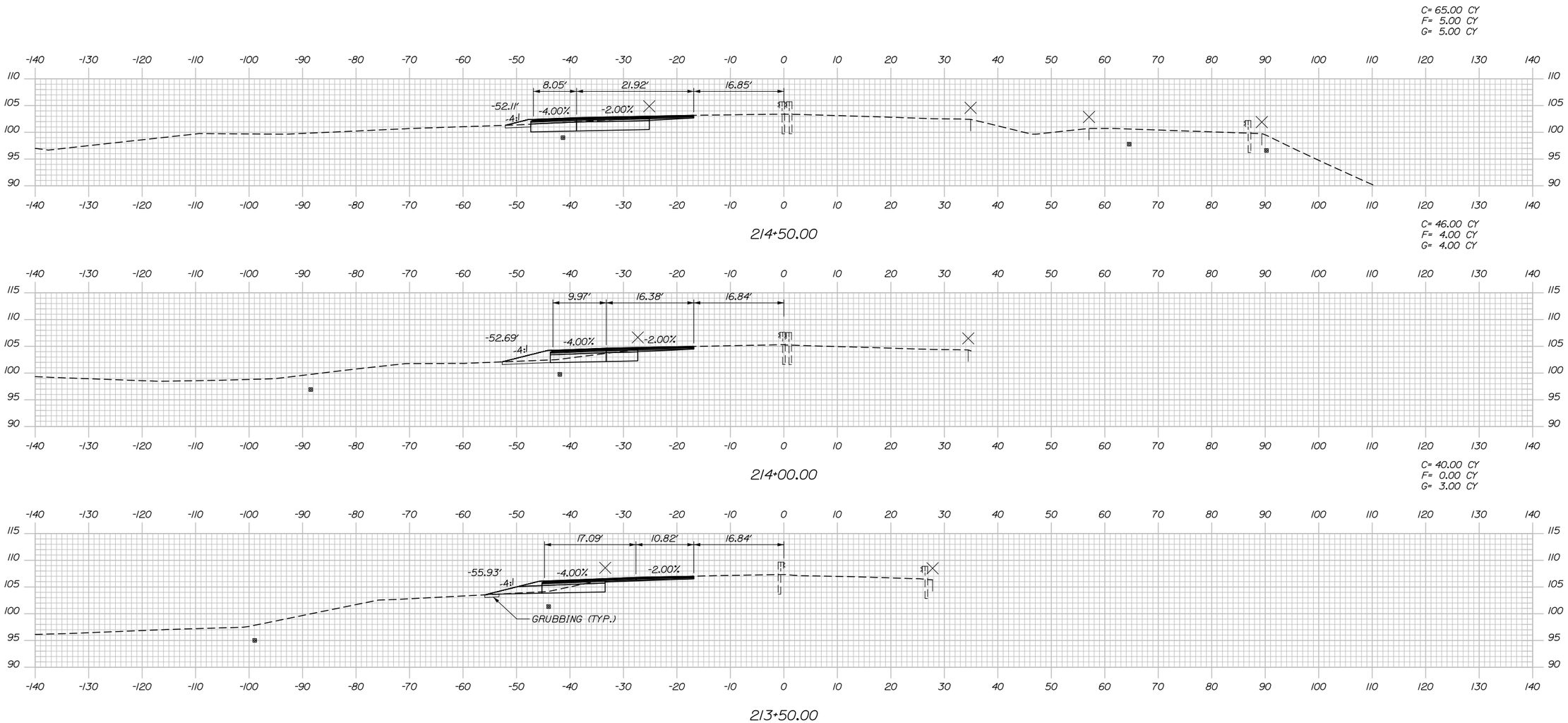

Filename: 047_Exit32_Xsect.dgn

Scale:

No.	Revision	By	Date

Designed by:

HNTB

CONSULTANT PROJECT MANAGER: R. BRUCE MUNGER, P.E.

	By	Date		By	Date
Designed	TJW	08/15	Checked	CDH	08/15
Drawn	TJW	08/15	In Charge of	RAL	08/15

HNTB CORPORATION
340 County Road, Suite 6-C
Westbrook, ME 04092
TEL (207) 774-5155
FAX (207) 228-0909

MAINE TURNPIKE

THE GOLD STAR MEMORIAL HIGHWAY

MTA PROJECT MANAGER: William Yates

INTERCHANGES 32, 36, & 46 NB TOLL SYSTEM UPGRADES

INTERCHANGE 32 CROSS SECTIONS STA. 213+50 TO STA. 214+50

SHEET NUMBER: XS32-02

CONTRACT:2015.12

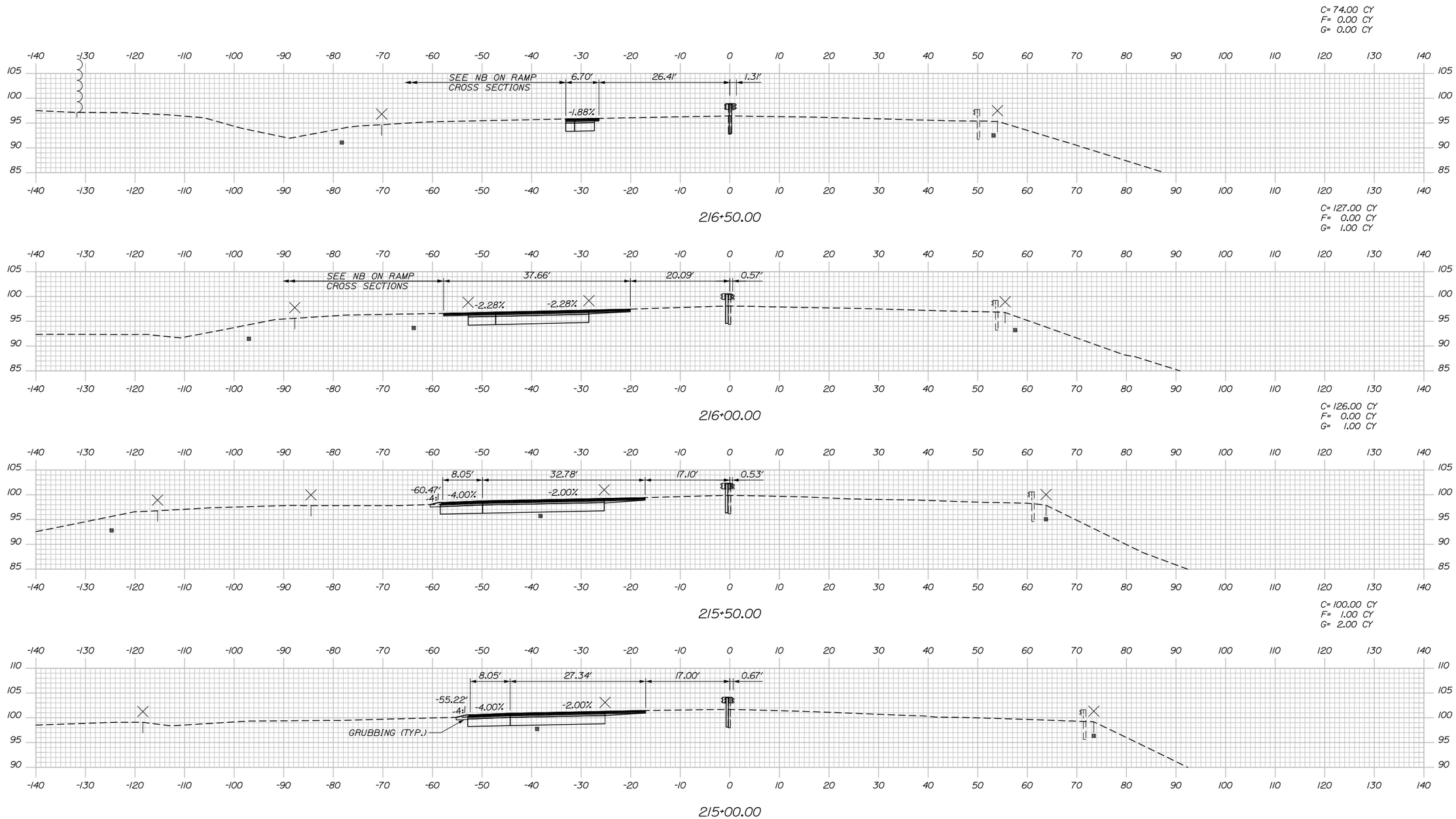

Date:9/5/2015

Filename: 048_Exit32_Xsect.dgn

Scale:

No.	Revision	By	Date

Designed by:

HNTB

CONSULTANT PROJECT MANAGER: R. BRUCE MUNGER, P.E.

	By	Date		By	Date
Designed	TJW	08/15	Checked	CDH	08/15
Drawn	TJW	08/15	In Charge of	RAL	08/15

HNTB CORPORATION
340 County Road, Suite 6-C
Westbrook, ME 04092
TEL (207) 774-5155
FAX (207) 228-0909

MAINE TURNPIKE

THE GOLD STAR MEMORIAL HIGHWAY

MTA PROJECT MANAGER: William Yates

INTERCHANGES 32, 36, & 46 NB
TOLL SYSTEM UPGRADES
INTERCHANGE 32 CROSS SECTIONS
STA. 215+00 TO STA. 216+50

SHEET NUMBER: XS32-03

CONTRACT:2015.12

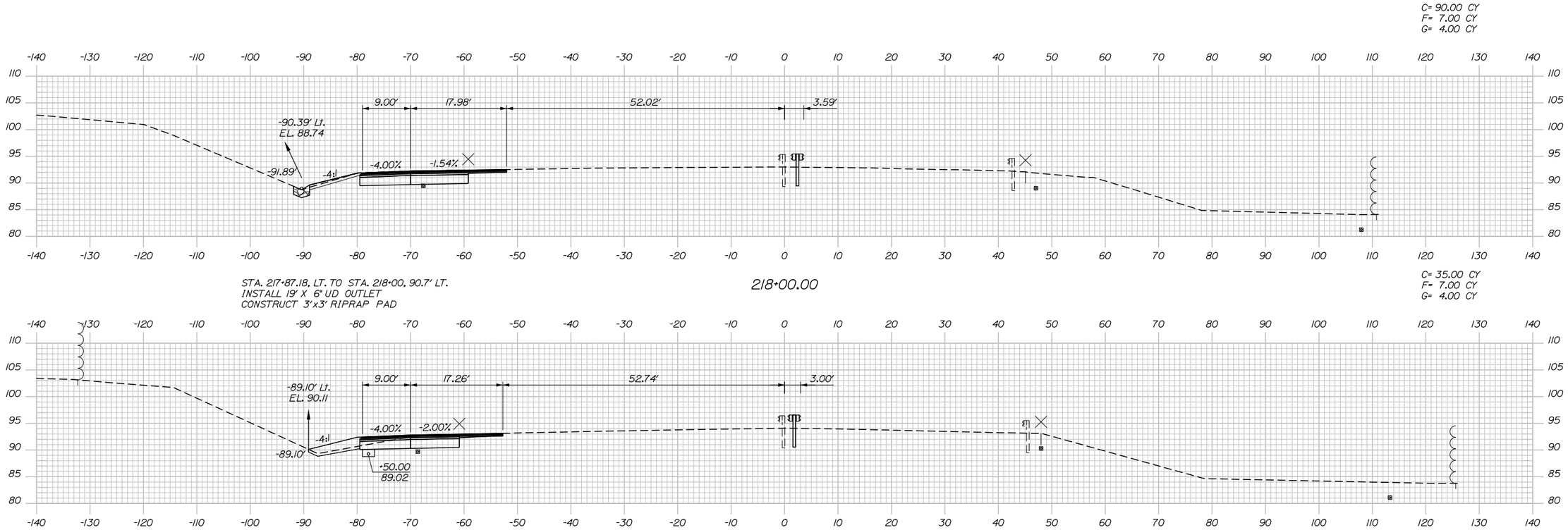

Date:9/5/2015

Filename: 049_Exit32_Xsect.dgn

Scale:				Designed by: HNTB					
No.	Revision	By	Date	CONSULTANT PROJECT MANAGER: R. BRUCE MUNGER, P.E.					
					By	Date		By	Date
				Designed	TJW	08/15	Checked	CDH	08/15
				Drawn	TJW	08/15	In Charge of	RAL	08/15

HNTB CORPORATION
340 County Road, Suite 6-C
Westbrook, ME 04092
TEL (207) 774-5155
FAX (207) 228-0909

MAINE TURNPIKE

THE GOLD STAR MEMORIAL HIGHWAY

MTA PROJECT MANAGER: William Yates

INTERCHANGES 32, 36, & 46 NB TOLL SYSTEM UPGRADES

INTERCHANGE 32 CROSS SECTIONS STA. 217+00 TO STA. 218+00

CONTRACT:2015.12

SHEET NUMBER: XS32-04

Date:9/5/2015

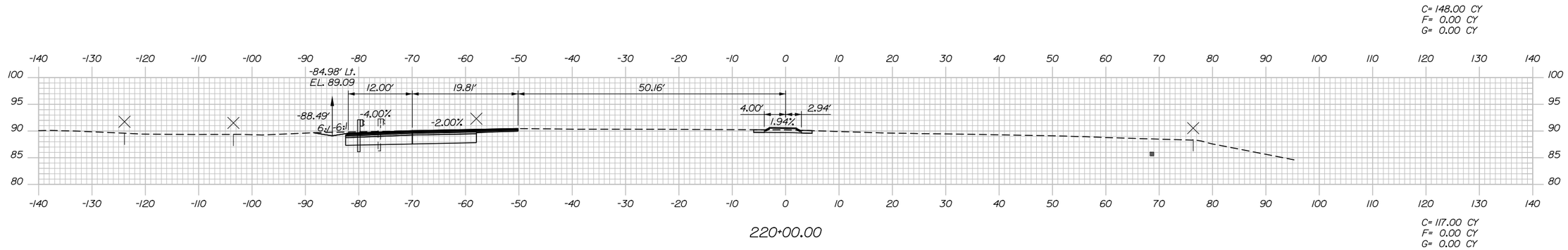

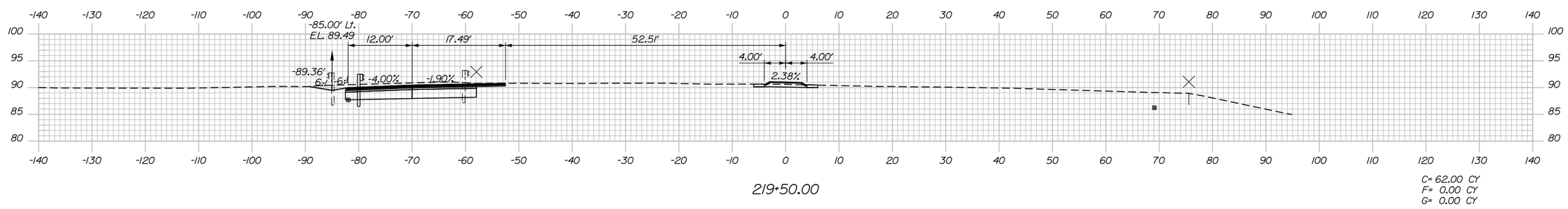

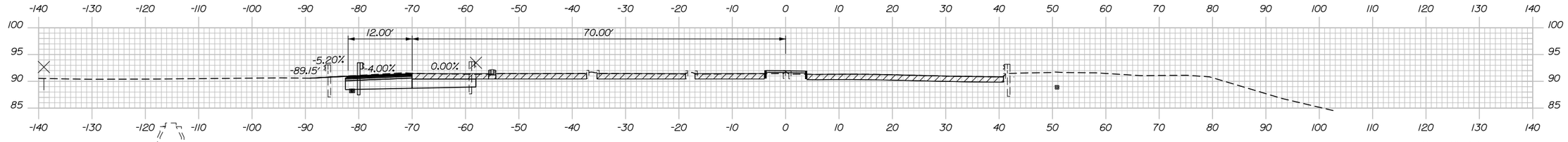

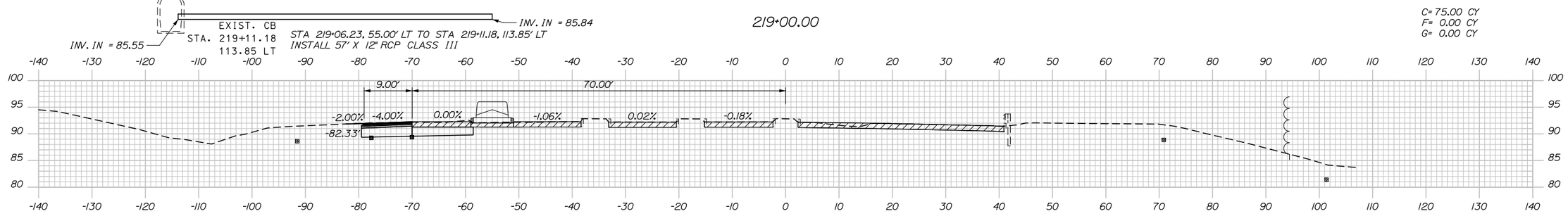

Filename: 050_Exit32_Xsect.dgn

Scale:				Designed by: HNTB	HNTB CORPORATION 340 County Road, Suite 6-C Westbrook, ME 04092 TEL (207) 774-5155 FAX (207) 228-0909	MAINE TURNPIKE	THE GOLD STAR MEMORIAL HIGHWAY	INTERCHANGES 32, 36, & 46 NB TOLL SYSTEM UPGRADES INTERCHANGE 32 CROSS SECTIONS STA. 218+50 TO STA. 220+00
No.	Revision	By	Date	CONSULTANT PROJECT MANAGER: R. BRUCE MUNGER, P.E.			MTA PROJECT MANAGER: William Yates	SHEET NUMBER: XS32-05
				By / Date /	By / Date			CONTRACT:2015.12
				Designed TJW 08/15	Checked CDH 08/15			50 OF 118
				Drawn TJW 08/15	In Charge of RAL 08/15			

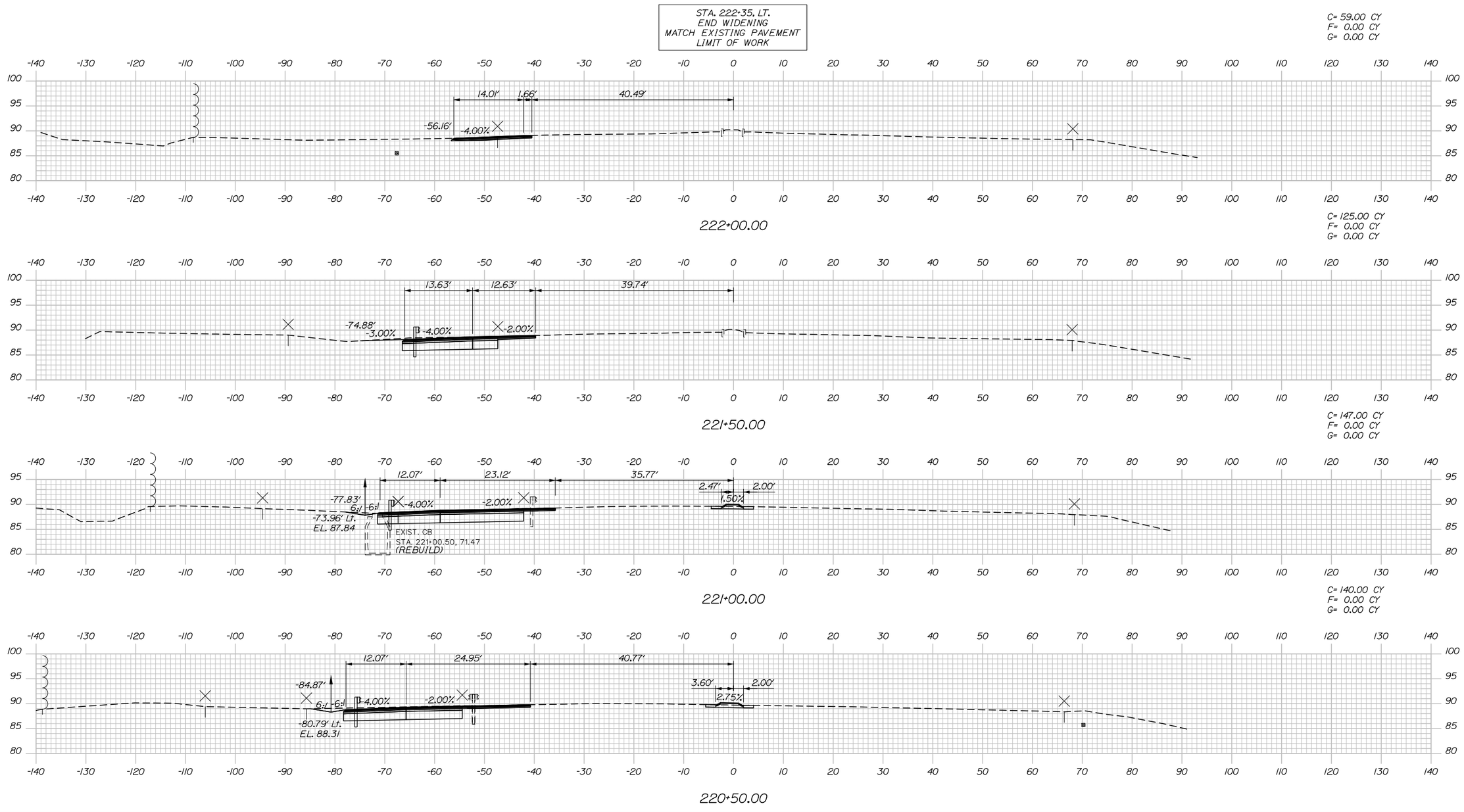

Date:9/5/2015

Filename: 051_Exit32_Xsect.dgn

Scale:

No.	Revision	By	Date

Designed by:

HNTB

CONSULTANT PROJECT MANAGER: R. BRUCE MUNGER, P.E.

	By	Date		By	Date
Designed	TJW	08/15	Checked	CDH	08/15
Drawn	TJW	08/15	In Charge of	RAL	08/15

HNTB CORPORATION
340 County Road, Suite 6-C
Westbrook, ME 04092
TEL (207) 774-5155
FAX (207) 228-0909

MAINE TURNPIKE

THE GOLD STAR MEMORIAL HIGHWAY

MTA PROJECT MANAGER: William Yates

INTERCHANGES 32, 36, & 46 NB
TOLL SYSTEM UPGRADES
INTERCHANGE 32 CROSS SECTIONS
STA. 220+50 TO STA. 222+00

SHEET NUMBER: XS32-06

CONTRACT:2015.12

51OF 118

Date:9/5/2015

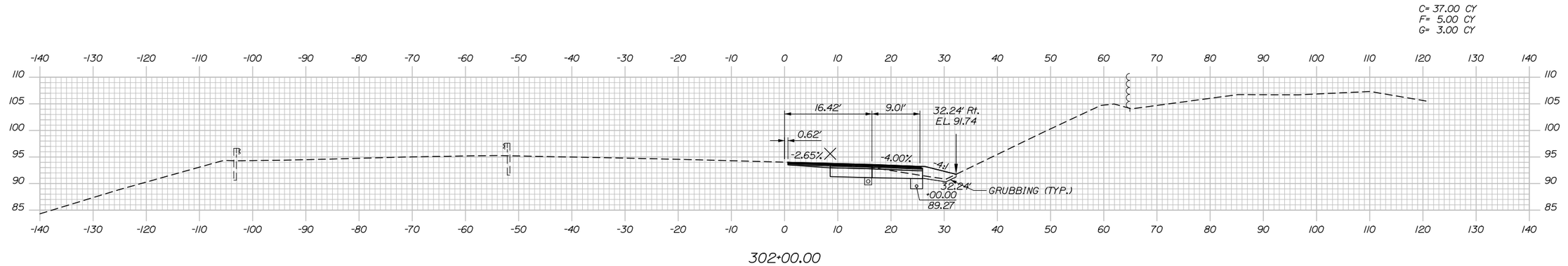

302+00.00

Filename: 052_Exit32_Xsect.dgn

Scale:				Designed by: HNTB					
No.	Revision	By	Date	CONSULTANT PROJECT MANAGER: R. BRUCE MUNGER, P.E.					
					By	Date		By	Date
				Designed	TJW	08/15	Checked	CDH	08/15
				Drawn	TJW	08/15	In Charge of	RAL	08/15

HNTB CORPORATION
340 County Road, Suite 6-C
Westbrook, ME 04092
TEL (207) 774-5155
FAX (207) 228-0909

MAINE TURNPIKE

THE GOLD STAR MEMORIAL HIGHWAY

MTA PROJECT MANAGER: William Yates

INTERCHANGES 32, 36, & 46 NB TOLL SYSTEM UPGRADES

INTERCHANGE 32 CROSS SECTIONS STA. 302+00

SHEET NUMBER: XS32-07

CONTRACT:2015.12

Date:9/5/2015

C= 39.00 CY
F= 10.00 CY
G= 10.00 CY

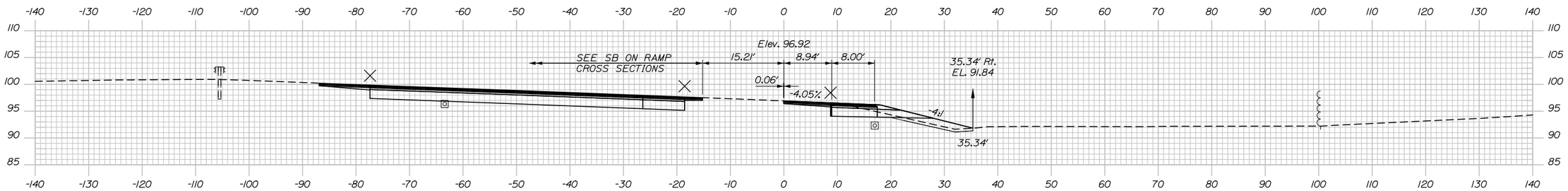

303+50.00

C= 48.00 CY
F= 14.00 CY
G= 9.00 CY

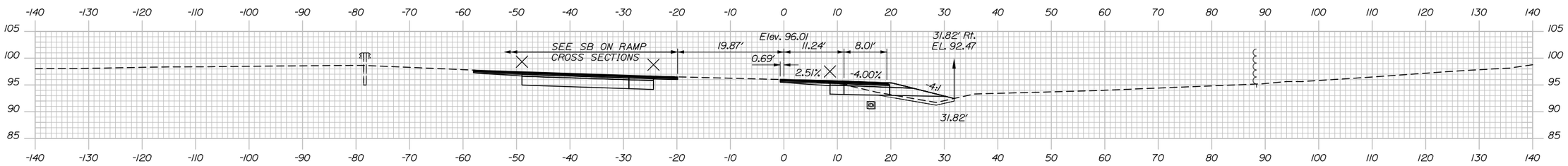

303+00.00

C= 64.00 CY
F= 13.00 CY
G= 7.00 CY

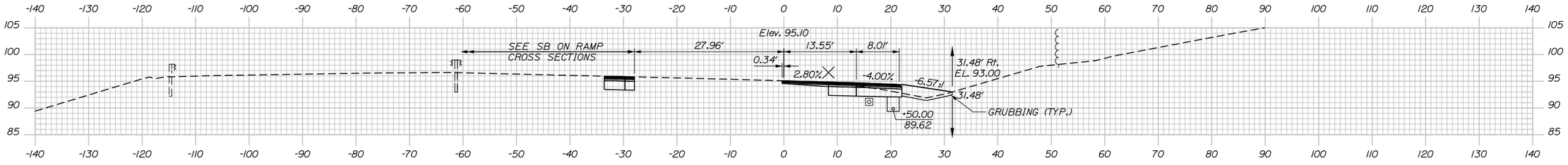

STA. 302+50, RT. TO STA. 217+87.18, LT.
INSTALL 135' X 6" UD TYPE "B"

302+50.00

Filename: 053_Exit32_Xsect.dgn

Scale:

No.	Revision	By	Date

Designed by:

HNTB

CONSULTANT PROJECT MANAGER: R. BRUCE MUNGER, P.E.

	By	Date		By	Date
Designed	TJW	08/15	Checked	CDH	08/15
Drawn	TJW	08/15	In Charge of	RAL	08/15

HNTB CORPORATION
340 County Road, Suite 6-C
Westbrook, ME 04092
TEL (207) 774-5155
FAX (207) 228-0909

MAINE TURNPIKE

THE GOLD STAR MEMORIAL HIGHWAY

MTA PROJECT MANAGER: William Yates

INTERCHANGES 32, 36, & 46 NB TOLL SYSTEM UPGRADES

INTERCHANGE 32 CROSS SECTIONS STA. 302+50 TO STA. 303+50

SHEET NUMBER: XS32-08

CONTRACT:2015.12

Date:9/5/2015

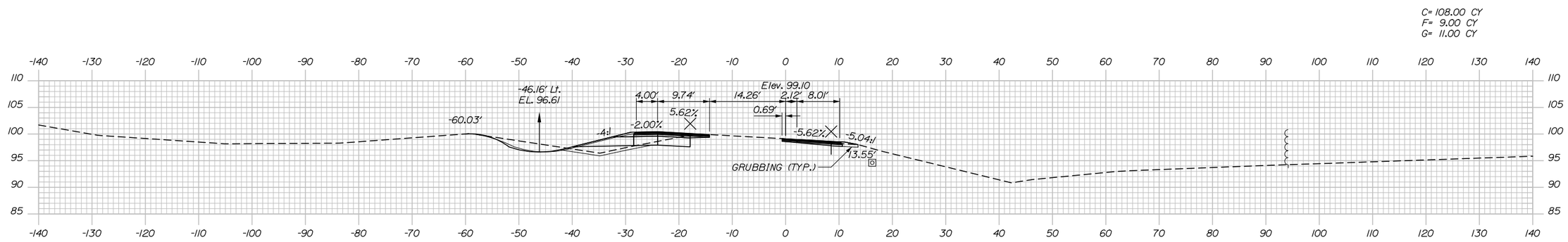

305+00.00

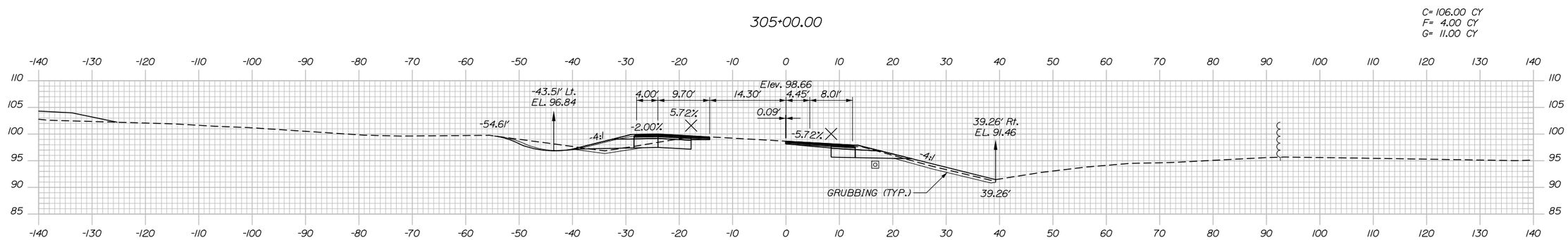

304+50.00

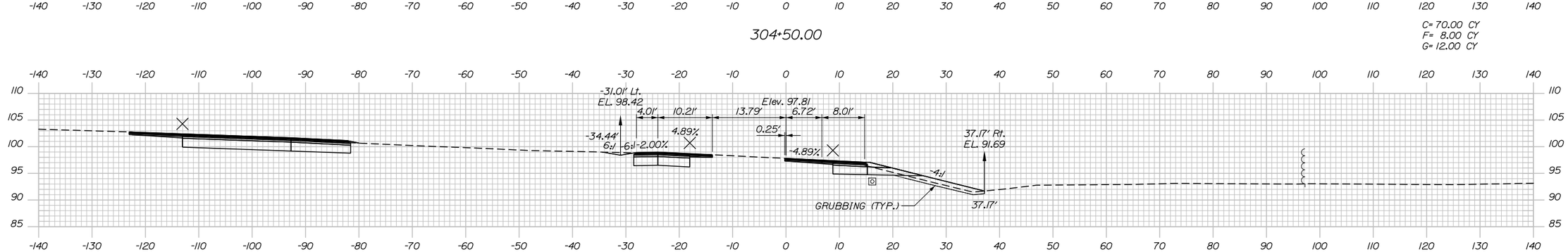

304+00.00

Filename: 054_Exit32_Xsect.dgn

Scale:

No.	Revision	By	Date

Designed by:

HNTB

CONSULTANT PROJECT MANAGER: R. BRUCE MUNGER, P.E.

	By	Date		By	Date
Designed	TJW	08/15	Checked	CDH	08/15
Drawn	TJW	08/15	In Charge of	RAL	08/15

HNTB CORPORATION
340 County Road, Suite 6-C
Westbrook, ME 04092
TEL (207) 774-5155
FAX (207) 228-0909

MAINE TURNPIKE

THE GOLD STAR MEMORIAL HIGHWAY

MTA PROJECT MANAGER: William Yates

INTERCHANGES 32, 36, & 46 NB
TOLL SYSTEM UPGRADES
INTERCHANGE 32 CROSS SECTIONS
STA. 304+00 TO STA. 305+00

SHEET NUMBER: XS32-09

CONTRACT:2015.12

Date:9/5/2015

C= 207.00 CY
F= 48.00 CY
G= 41.00 CY

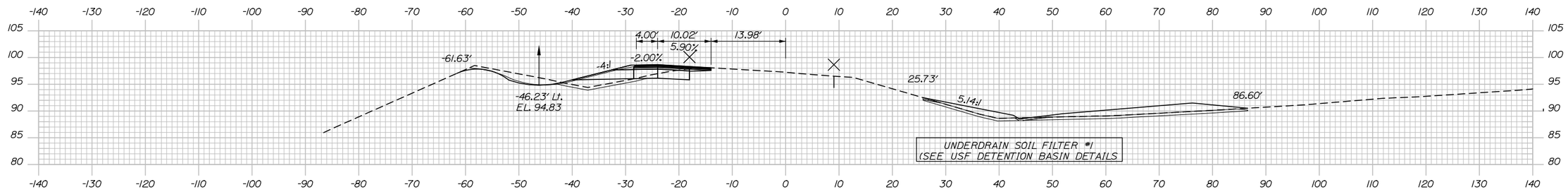

306+50.00

C= 309.00 CY
F= 18.00 CY
G= 14.00 CY

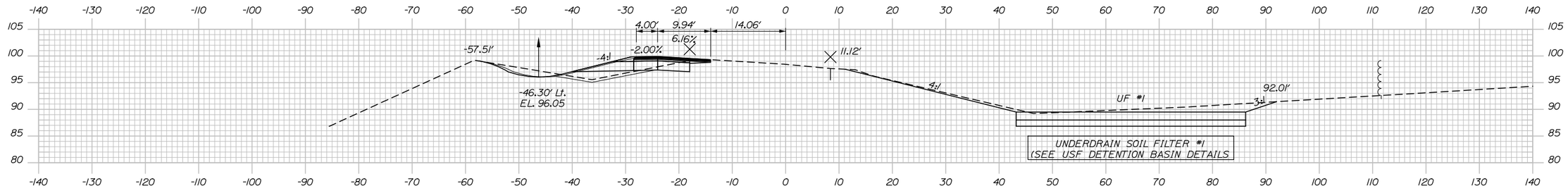

306+00.00

C= 185.00 CY
F= 15.00 CY
G= 13.00 CY

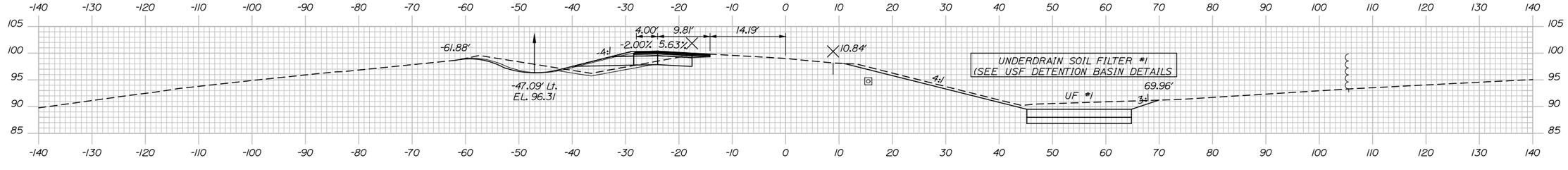

305+50.00

Filename: 055_Exit32_Xsect.dgn

Scale:

No.	Revision	By	Date

Designed by:

HNTB

CONSULTANT PROJECT MANAGER: R. BRUCE MUNGER, P.E.

	By	Date		By	Date
Designed	TJW	08/15	Checked	CDH	08/15
Drawn	TJW	08/15	In Charge of	RAL	08/15

HNTB CORPORATION
340 County Road, Suite 6-C
Westbrook, ME 04092
TEL (207) 774-5155
FAX (207) 228-0909

MAINE TURNPIKE

THE GOLD STAR MEMORIAL HIGHWAY

MTA PROJECT MANAGER: William Yates

INTERCHANGES 32, 36, & 46 NB TOLL SYSTEM UPGRADES

INTERCHANGE 32 CROSS SECTIONS STA. 305+50 TO STA. 306+50

SHEET NUMBER: XS32-10

CONTRACT:2015.12

Date:9/5/2015

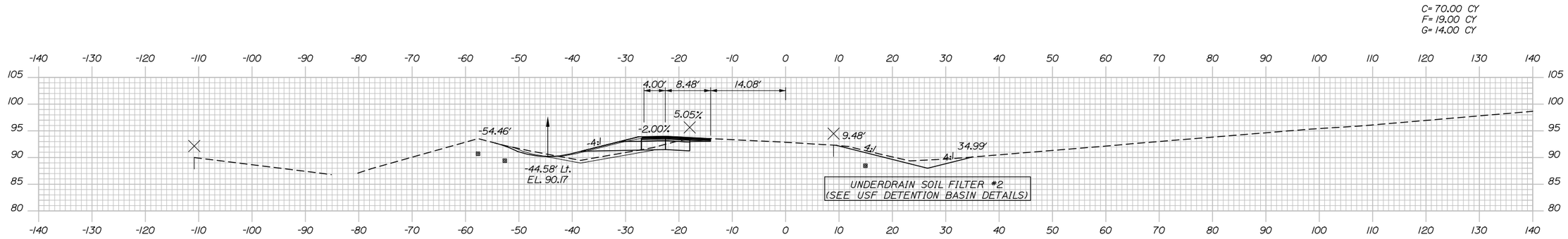

308+00.00

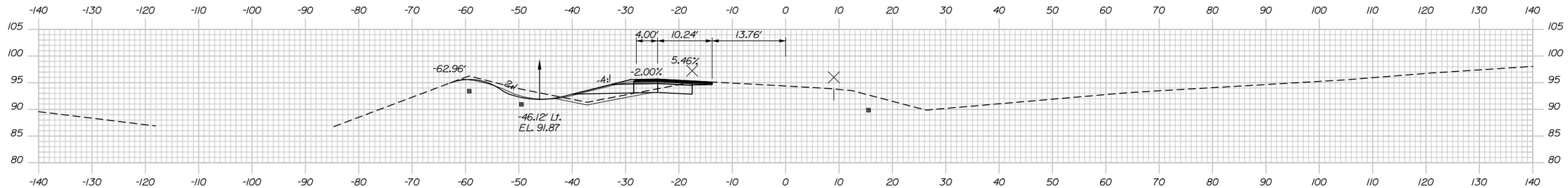

-46.44' Lt.
EL. 88.34

307+50.00

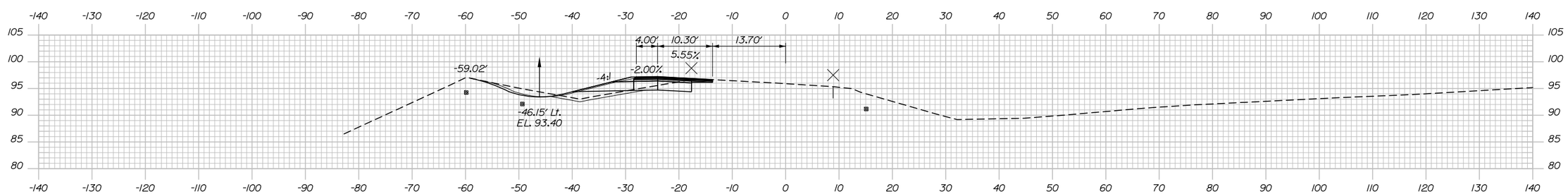

307+00.00

Filename: 056_Exit32_Xsect.dgn

Scale:

No.	Revision	By	Date

Designed by:

HNTB

CONSULTANT PROJECT MANAGER: R. BRUCE MUNGER, P.E.

	By	Date		By	Date
Designed	TJW	08/15	Checked	CDH	08/15
Drawn	TJW	08/15	In Charge of	RAL	08/15

HNTB CORPORATION
340 County Road, Suite 6-C
Westbrook, ME 04092
TEL (207) 774-5155
FAX (207) 228-0909

MAINE TURNPIKE

THE GOLD STAR MEMORIAL HIGHWAY

MTA PROJECT MANAGER: William Yates

INTERCHANGES 32, 36, & 46 NB TOLL SYSTEM UPGRADES

INTERCHANGE 32 CROSS SECTIONS STA. 307+00 TO STA. 308+00

SHEET NUMBER: XS32-11

CONTRACT:2015.12

Date:9/5/2015

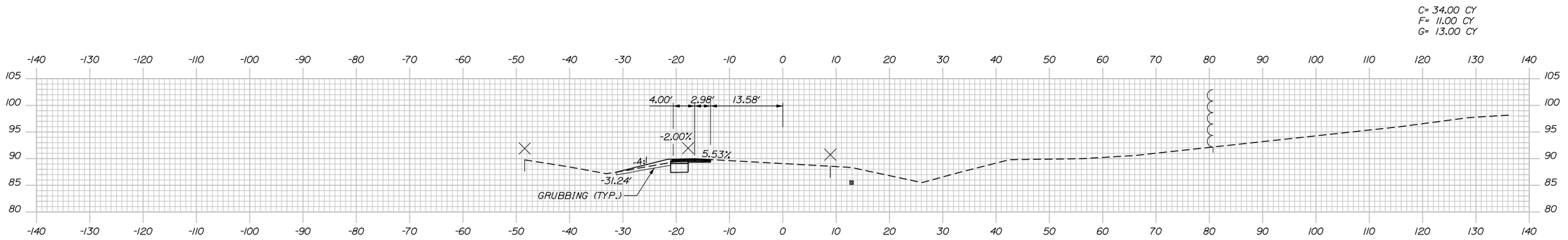

309+50.00

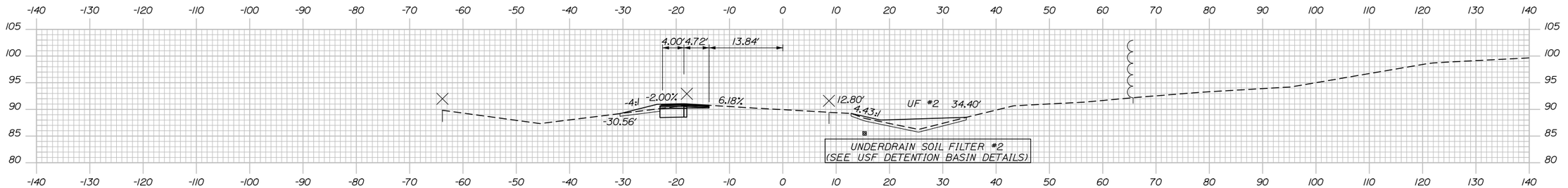

309+00.00

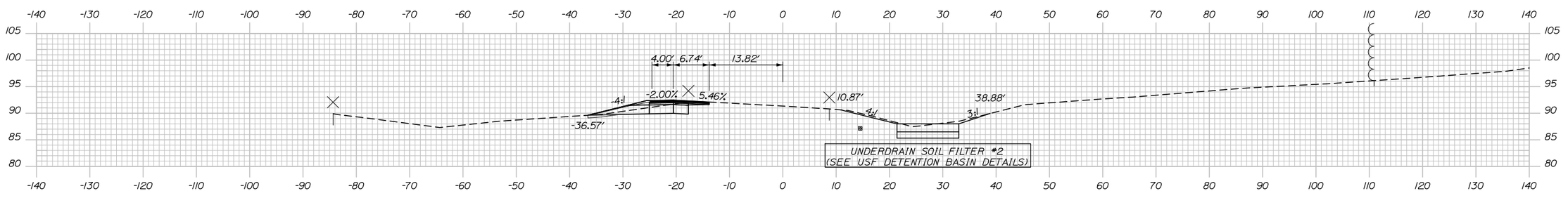

308+50.00

Filename: 057_Exit32_Xsect.dgn

Scale:

No.	Revision	By	Date

Designed by:

HNTB

CONSULTANT PROJECT MANAGER: R. BRUCE MUNGER, P.E.

	By	Date		By	Date
Designed	TJW	08/15	Checked	CDH	08/15
Drawn	TJW	08/15	In Charge of	RAL	08/15

HNTB CORPORATION
340 County Road, Suite 6-C
Westbrook, ME 04092
TEL (207) 774-5155
FAX (207) 228-0909

MAINE TURNPIKE

THE GOLD STAR MEMORIAL HIGHWAY

MTA PROJECT MANAGER: William Yates

INTERCHANGES 32, 36, & 46 NB TOLL SYSTEM UPGRADES

INTERCHANGE 32 CROSS SECTIONS STA. 308+50 TO STA. 309+50

SHEET NUMBER: XS32-12

CONTRACT:2015.12

Date:9/5/2015

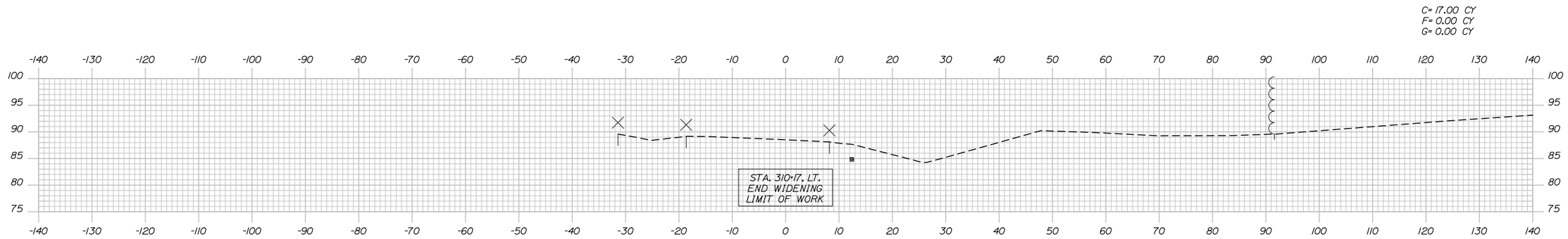

310+50.00

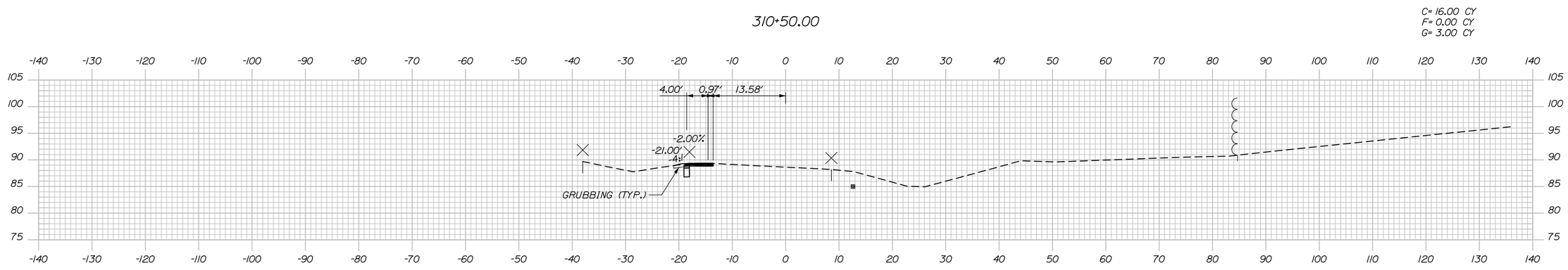

310+00.00

Filename: 058_Exit32_Xsect.dgn

Scale:				Designed by: HNTB					
No.	Revision	By	Date	CONSULTANT PROJECT MANAGER: R. BRUCE MUNGER, P.E.					
					By	Date		By	Date
				Designed	TJW	08/15	Checked	CDH	08/15
				Drawn	TJW	08/15	In Charge of	RAL	08/15

HNTB CORPORATION
340 County Road, Suite 6-C
Westbrook, ME 04092
TEL (207) 774-5155
FAX (207) 228-0909

MAINE TURNPIKE

THE GOLD STAR MEMORIAL HIGHWAY

MTA PROJECT MANAGER: William Yates

INTERCHANGES 32, 36, & 46 NB TOLL SYSTEM UPGRADES

INTERCHANGE 32 CROSS SECTIONS STA. 310+00 TO STA. 310+50

CONTRACT:2015.12

SHEET NUMBER: XS32-13

Date:9/5/2015

NOTES:

1. SEE SPECIFICATION FOR ITEM 800.201 - MANHOLE REMOVAL AND ELECTRICAL/MECHANICAL PIT REHAB FOR MORE INFORMATION.

2. THE CONTRACTOR SHALL INSTALL 2 NEW GUARDRAIL 350 FLEAT TERMINAL END TREATEMENTS ON THE EXIT 36 NORTHBOUND OFF RAMP AND 2 ON THE EXIT 36 SOUTHBOUND OFF RAMP AT LOCAITONS TO BE DETERMINED BY THE RESIDENT.

ITEM 527.303 REMOVE AND RESET ENERGY ABSORBING SYSTEM (CAT)	EA
STA. 116+86.75, RT.	1

ITEM 527.305 REMOVE AND STACK ENERGY ABSORBING SYSTEM (CAT)	EA
STA. 122+56.12, RT.	1

ITEM 607.4311 SNOW FENCE	LF
STA. 119+25.87, RT. TO STA. 119+66.28, RT.	40

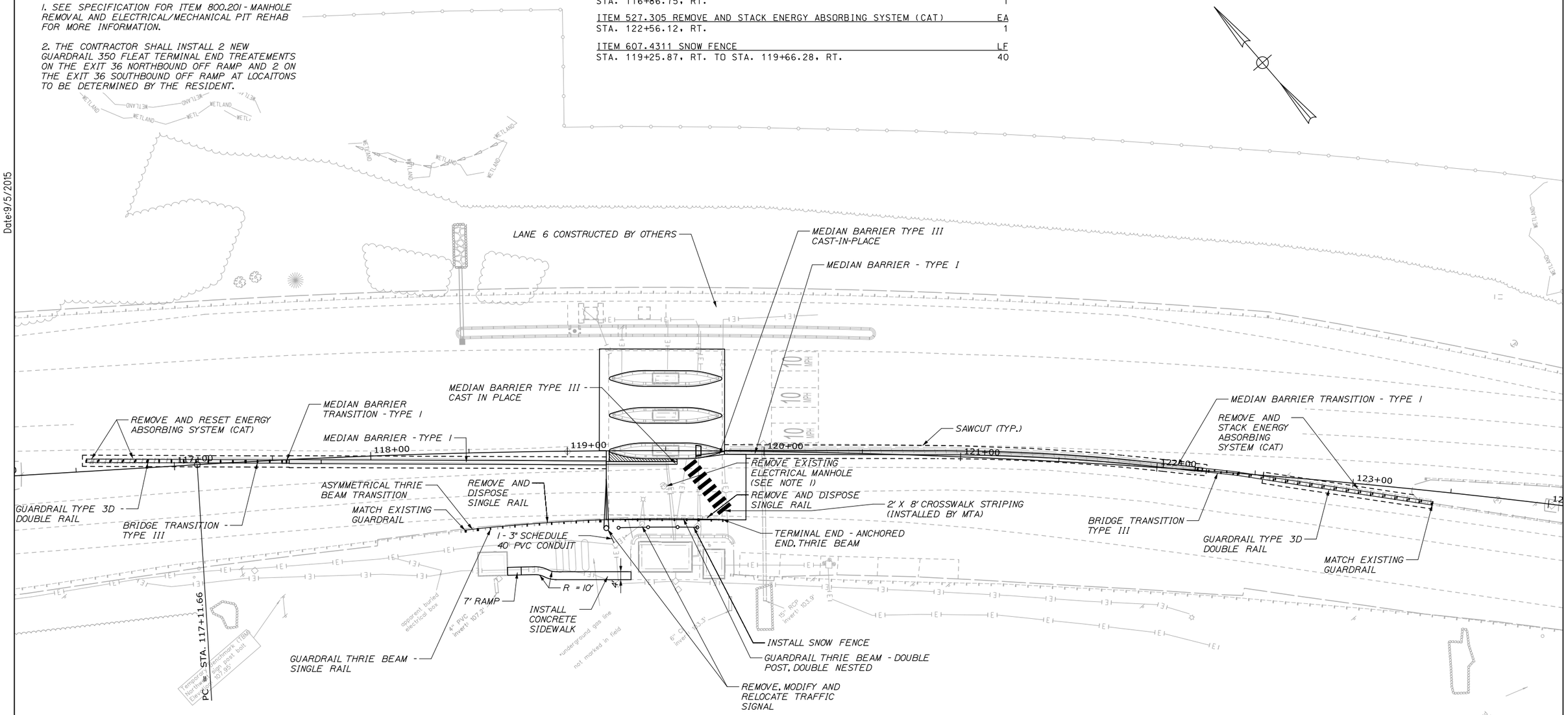

ITEM 526.351 MEDIAN BARRIER TYPE I	LF
STA. 117+74.64, RT. TO STA. 119+19.77, RT.	145.00
STA. 119+65+37, RT. TO STA. 122+03.17, LT.	224.00

ITEM 606.1723 BRIDGE TRANSITION TYPE III	EA
STA. STA. 117+36.54, RT	2
STA. STA. 122+20.66, RT	2

ITEM 606.2401 GUARDRAIL TYPE 3D - DOUBLE RAIL	LF
STA. 116+86.64, LT TO STA. 117+36.54, RT	50
STA. 122+41.29, RT TO STA. 123+41.22, RT	100

ITEM 606.279 TERMINAL END - ANCHORED END, THRIE BEAM	EA
STA. 219+66.66, RT.	1

ITEM 526.361 MEDIAN BARRIER TRANSITION TYPE I	EA
STA. 117+54.66, RT. TO STA. 117+74.64, RT.	1
STA. 122+03.17, RT. TO STA. 122+23.16, RT.	1

ITEM 606.65 GUARDRAIL THRIE BEAM - SINGLE RAIL	LF
STA. 118+53.21, RT. TO STA. 119+16.21, RT.	62.5

ITEM 606.651 GUARDRAIL THRIE BEAM - DOUBLE POST, DOUBLE-NESTED RAIL	LF
STA. 119+16.21, RT. TO STA. 119+66.66, RT.	50

ITEM 606.701 ASYMMETRICAL THRIE BEAM TRANSITION	EA
STA. 118+46.92, RT.	1

ITEM 606.80 GUARDRAIL 350 FLEAT TERMINAL	EA
NORTHBOUND OFF RAMP LT	1
NORTHBOUND OFF RAMP RT	1
SOUTHBOUND OFF RAMP LT	1
SOUTHBOUND OFF RAMP RT	1

609.191 CONCRETE CURB - TYPE II

LOCATION	LENGTH	RADIUS
STA 117+39.68, 0.83' RT TO STA 117+54.66, 1.66' RT	15.00	-
STA 117+39.78, 0.88' LT TO STA 117+54.75, 0.04' LT	15.00	-
STA 122+23.16, 0.44' RT TO STA 122+38.15, 0.98' RT	15.00	-
STA 122+23.22, 1.27' LT TO STA 122+38.21, 0.72' LT	15.00	-

Filename: 059_HDPlan_01.dgn

Scale: 25 0 25 50
Scale of Feet

No.	Revision	By	Date

Designed by: HNTB

CONSULTANT PROJECT MANAGER: R. Bruce Munger, P.E.

	By	Date		By	Date
Designed	CDH	08/15	Checked	CDH	08/15
Drawn	TJW	08/15	In Charge of	RAL	08/15

HNTB CORPORATION
340 County Road, Suite 6-C
Westbrook, ME 04092
TEL (207) 774-5155
FAX (207) 228-0909

MAINE TURNPIKE

THE GOLD STAR MEMORIAL HIGHWAY

MTA PROJECT MANAGER: William Yates

INTERCHANGES 32, 36, & 46 NB TOLL SYSTEM UPGRADES

INTERCHANGE 36 GENERAL PLAN 1

SHEET NUMBER: GP36-01

CONTRACT:2015.12

Date:9/5/2015

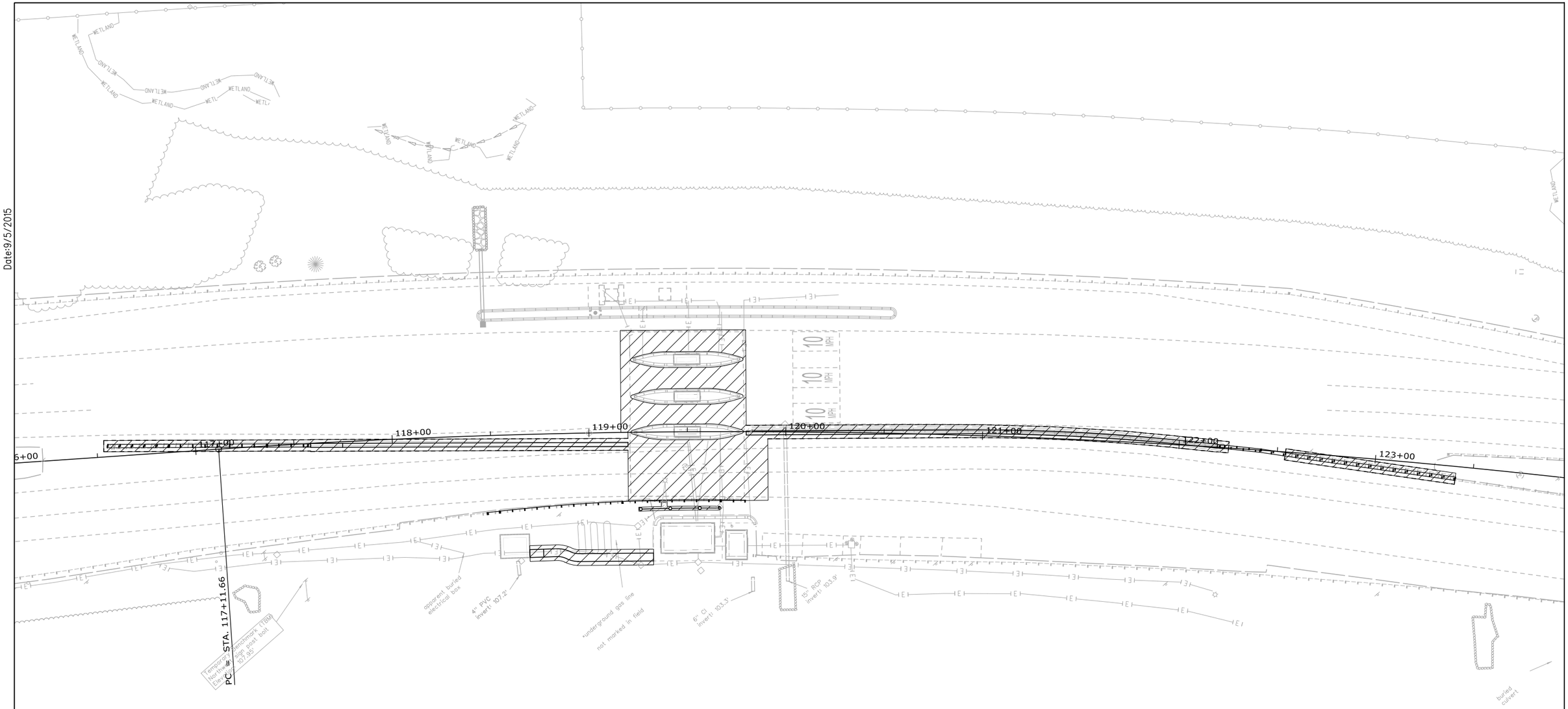

LEGEND

LIMIT OF DISTURBANCE
0.20 ACRES

NOTES:

1. *EROSION AND SEDIMENTATION CONTROL DEVICES REQUIRED FOR THE CONTRACTOR'S ACCESS LOCATIONS AND STORAGE AREAS WILL NOT BE MEASURED FOR PAYMENT.*
2. *SEE SPECIFICATIONS FOR CONTRACTOR'S SUBMITTAL REQUIREMENTS IF ADDING ADDITIONAL LIMITS OF DISTURBANCE TO THE PROJECT ESTIMATED QUANTITIES.*

Filename: 060_Exit36_LOD Plan.dgn

Scale: 25 0 25 50
Scale of Feet

No.	Revision	By	Date

Designed by: HNTB

CONSULTANT PROJECT MANAGER: R. BRUCE MUNGER, P.E.

	By	Date		By	Date
Designed	CDH	08/15	Checked	CDH	08/15
Drawn	SLR	08/15	In Charge of	RAL	08/15

HNTB CORPORATION
340 County Road, Suite 6-C
Westbrook, ME 04092
TEL (207) 774-5155
FAX (207) 228-0909

MAINE TURNPIKE

THE GOLD STAR MEMORIAL HIGHWAY

MTA PROJECT MANAGER: William Yates

INTERCHANGES 32, 36, & 46 NB TOLL SYSTEM UPGRADES

INTERCHANGE 36 LIMITS OF DISTURBANCE PLAN

SHEET NUMBER: LOD36-01

CONTRACT:2015.12

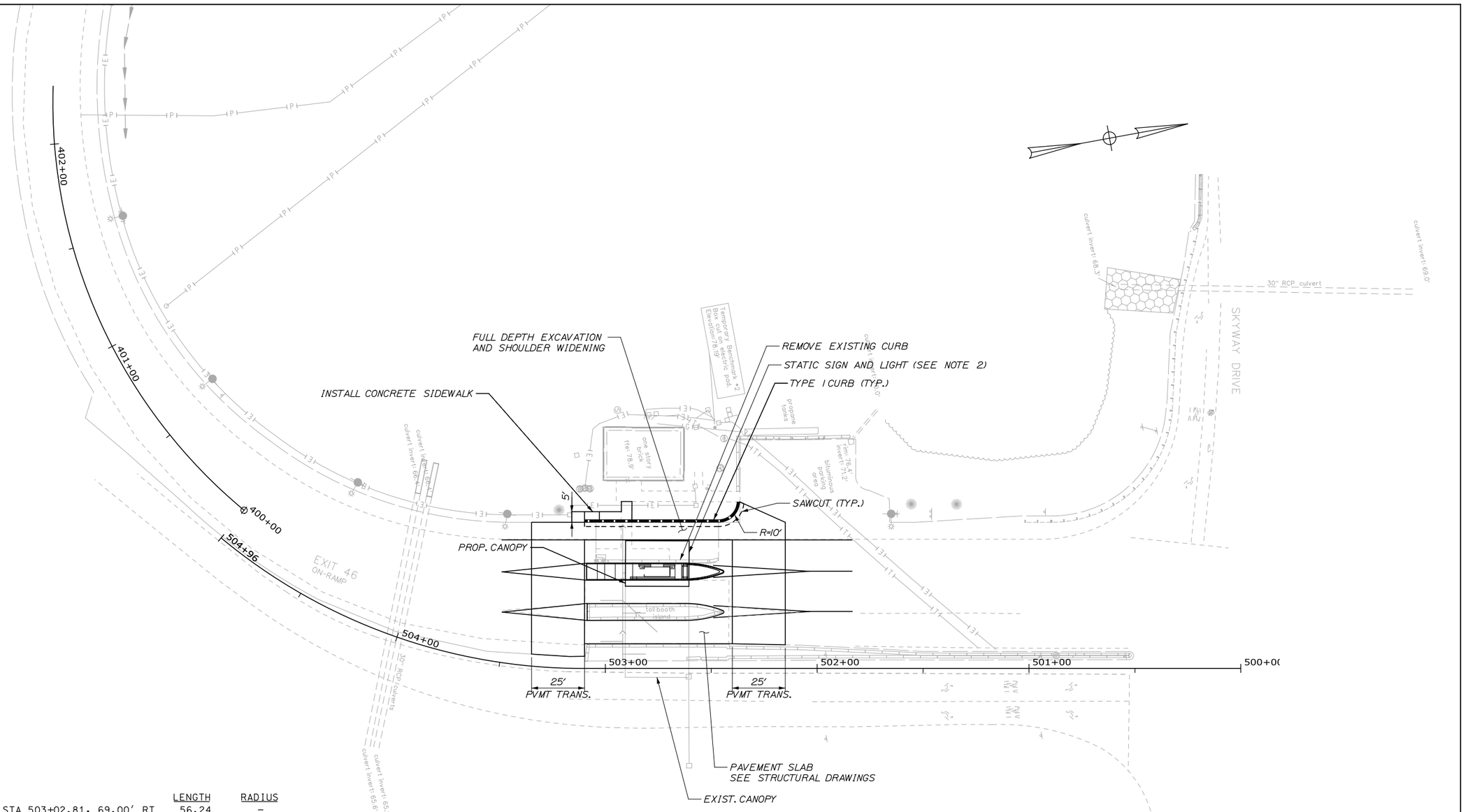

609.11 VERTICAL CURB TYPE 1

LOCATION	LENGTH	RADIUS
STA 502+46.57, 69.00′ RT TO STA 503+02.81, 69.00′ RT	56.24	–

609.12 VERTICAL CURB TYPE 1 – CIRCULAR

LOCATION	LENGTH	RADIUS
STA 502+37.51, 74.77′ RT STA 502+46.57, 69.00′ RT	11.34	10.00

609.234 TERMINAL CURB TYPE 1 – 4′

LOCATION	LENGTH	RADIUS	EA
STA 502+36.58, 78.63′ RT TO STA 502+39.16, 72.28′ RT	4.00	10.00	1

609.237 TERMINAL CURB TYPE 1 – 7′

LOCATION	LENGTH	RADIUS	EA
STA 503+02.81, 69.00′ RT TO STA 503+09.81, 69.00′ RT	7.00	–	1

NOTES:

1. FINAL PAVEMENT MARKINGS TO BE INSTALLED BY THE AUTHORITY.
2. NEW CANOPY SIGNS/LIGHTS NORTHBOUND ENTERING WILL BE PROVIDED BY THE AUTHORITY AND INSTALLED BY THE CONTRACTOR. 3 EXISTING FASCIA MOUNTED SIGNS NORTHBOUND ENTERING SHALL BE REMOVED AND STACKED BY THE CONTRACTOR.

Date:9/5/2015

Filename: 061_General_Plan.dgn

Scale: 25 0 25 50
Scale of Feet

No.	Revision	By	Date

Designed by: HNTB

CONSULTANT PROJECT MANAGER: R. Bruce Munger, P.E.

	By	Date		By	Date
Designed	CDH	08/15	Checked	CDH	08/15
Drawn	TJW	08/15	In Charge of	RAL	08/15

HNTB CORPORATION
340 County Road, Suite 6-C
Westbrook, ME 04092
TEL (207) 774-5155
FAX (207) 228-0909

MAINE TURNPIKE

THE GOLD STAR MEMORIAL HIGHWAY

MTA PROJECT MANAGER: William Yates

INTERCHANGES 32, 36, & 46 NB TOLL SYSTEM UPGRADES

INTERCHANGE 46 NB GENERAL PLAN

SHEET NUMBER: GP46-01

CONTRACT:2015.12

Date:9/5/2015

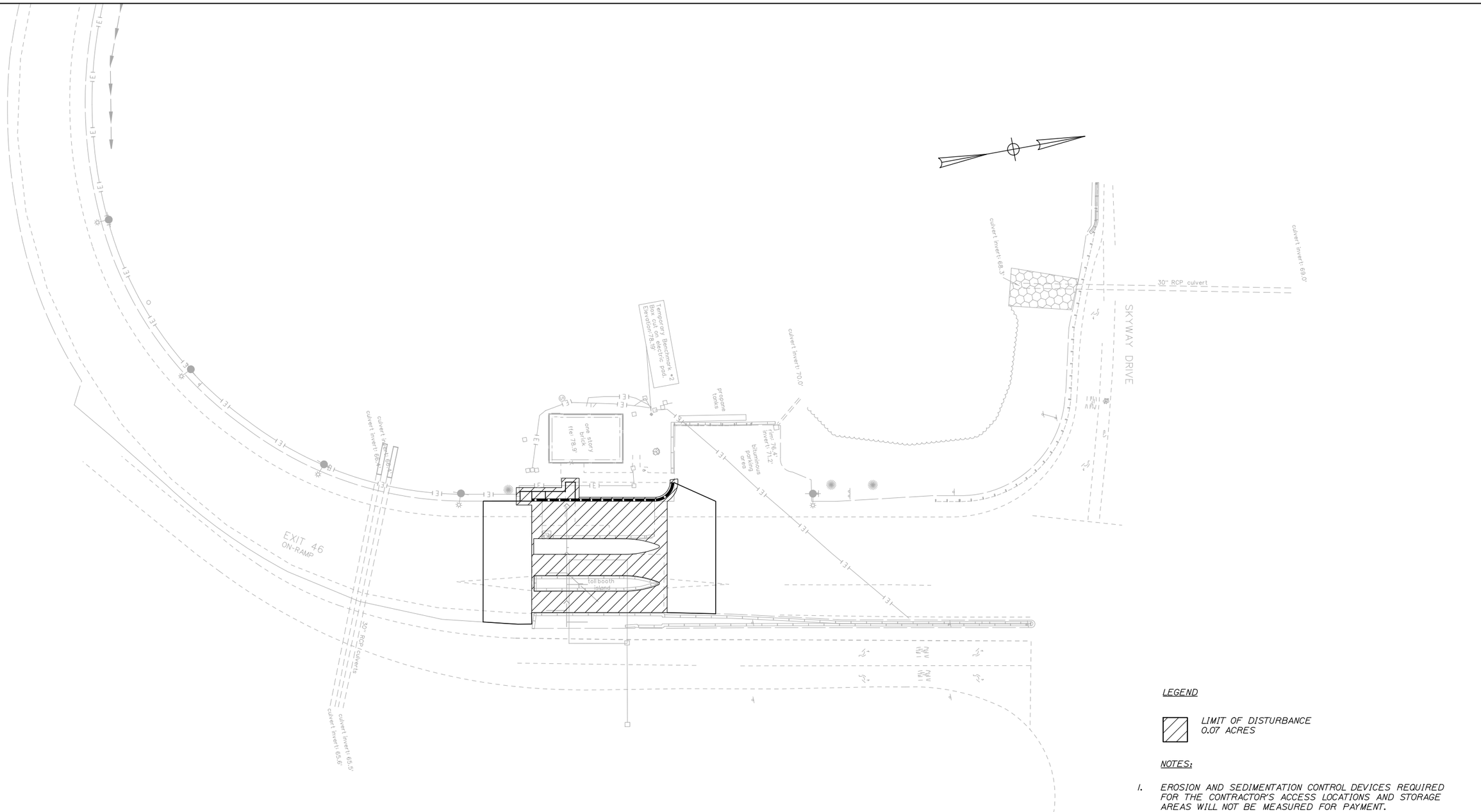

LEGEND

LIMIT OF DISTURBANCE
0.07 ACRES

NOTES:

1. *EROSION AND SEDIMENTATION CONTROL DEVICES REQUIRED FOR THE CONTRACTOR'S ACCESS LOCATIONS AND STORAGE AREAS WILL NOT BE MEASURED FOR PAYMENT.*
2. *SEE SPECIFICATIONS FOR CONTRACTOR'S SUBMITTAL REQUIREMENTS IF ADDING ADDITIONAL LIMITS OF DISTURBANCE TO THE PROJECT ESTIMATED QUANTITIES.*

Filename: 062_Exit46NB_LOD Plan.dgn

Scale: 25 0 25 50
Scale of Feet

No.	Revision	By	Date

Designed by: HNTB

CONSULTANT PROJECT MANAGER: R. Bruce Munger, P.E.

	By	Date		By	Date
Designed	CDH	08/15	Checked	CDH	08/15
Drawn	SLR	08/15	In Charge of	RAL	08/15

HNTB CORPORATION
340 County Road, Suite 6-C
Westbrook, ME 04092
TEL (207) 774-5155
FAX (207) 228-0909

MAINE TURNPIKE

THE GOLD STAR MEMORIAL HIGHWAY

MTA PROJECT MANAGER: William Yates

INTERCHANGES 32, 36, & 46 NB TOLL SYSTEM UPGRADES

INTERCHANGE 46 NB LIMITS OF DISTURBANCE PLAN

SHEET NUMBER: QT-1

CONTRACT:2015.12

Date:9/5/2015

TOLL PLAZA STRUCTURAL GENERAL NOTES:

SPECIFICATIONS

DESIGN

STRUCTURAL SLAB
- AASHTO LRFD BRIDGE DESIGN SPECIFICATIONS, 7TH EDITION WITH 2015 INTERIMS

- AASHTO STANDARD SPECIFICATIONS FOR HIGHWAY BRIDGES (17th EDITION)

- AASHTO STANDARD SPECIFICATIONS FOR STRUCTURAL SUPPORTS FOR HIGHWAY SIGNS, LUMINAIRES, AND TRAFFIC SIGNALS (6th EDITION 2013 WITH 2015 INTERIMS)

- AASHTO BRIDGE DESIGN GUIDE SPECIFICATIONS FOR GFRP-REINFORCED CONCRETE BRIDGE DECKS AND TRAFFIC RAILINGS (NOVEMBER 2009)

EXISTING CANOPY MODIFICATIONS
- AISC MANUAL OF STEEL CONSTRUCTION, LRFD METHOD, 13th EDITION
- ASCE 7-10 MINIMUM DESIGN LOADS FOR BUILDINGS AND OTHER STRUCTURES, 3rd PRINTING (2013)

CONSTRUCTION

STATE OF MAINE, DEPARTMENT OF TRANSPORTATION STANDARD SPECIFICATIONS, HIGHWAYS AND BRIDGES, REVISION OF 2002

STATE OF MAINE, DEPARTMENT OF TRANSPORTATION STANDARD DETAILS FOR HIGHWAYS AND BRIDGES, DECEMBER 2002 WITH UPDATES

DESIGN LOADING

LIVE LOAD

STRUCTURAL SLAB - HL-93

EXISTING CANOPY MODIFICATIONS - 20 PSF

WIND

BASIC WIND SPEED (V) = 95 MPH

SNOW / ICE

EXISTING CANOPY MODIFICATIONS - GROUND SNOW LOAD, p_g = 70 PSF (ASCE 7-10)

MATERIALS

CONCRETE

ALL STRUCTURAL CONCRETE - CLASS AAA

REINFORCING STEEL

ASTM A775 GRADE 60 (EPOXY-COATED BARS)

ASTM A884 CLASS A (EPOXY-COATED WELDED WIRE FABRIC)

ANCHOR RODS

SHALL MEET THE REQUIREMENTS OF ASTM F1554 GRADE 55 FOR CANOPY, ANCHOR RODS SHALL BE SWEDGED OR THREADED ON THE EMBEDDED PORTION OF THE ROD

GFRP REINFORCING

ASLAN 100 GFRP GLASS FIBER REINFORCED POLYMER (GFRP) REINFORCING BARS AS MANUFACTURED BY HUGHES BROTHERS, INC. OR APPROVED EQUAL

STRUCTURAL STEEL

STRUCTURAL STEEL TUBING SHALL CONFORM TO ASTM A500, GRADE B (f_y = 46,000 PSI)

ALL OTHER STRUCTURAL STEEL SHALL CONFORM TO ASTM A709, GRADES 36 AND 50 AS SPECIFIED.

BASIC DESIGN STRESSES

CONCRETE

CLASS AAA - f'_c = 4,500 PSI

REINFORCING STEEL

f_y = 60,000 PSI (BARS)

STRUCTURAL STEEL

ASTM A500 - f_y = 46,000 PSI

ASTM A709 GRADE 36 - f_y = 36,000 PSI

ASTM A709 GRADE 50 - f_y = 50,000 PSI

GFRP

#6 BAR - MINIMUM TENSILE STRESS = 90,000 PSI

ANCHOR RODS

CANOPY: ASTM F1554 GRADE 55 - f_y = 55,000 PSI

CONSTRUCTION NOTES:

1. DIMENSIONS, ANGLES, BEARINGS AND ELEVATIONS SHOWN ON THE PLANS HAVE BEEN OBTAINED FROM AVAILABLE PLANS OF THE EXISTING STRUCTURE, LIMITED FIELD INVESTIGATION, AND SURVEY AND MAY NOT ACCURATELY REFLECT ACTUAL FIELD CONDITIONS. ACCORDINGLY, THE CONTRACTOR SHALL BE RESPONSIBLE FOR MAKING FIELD MEASUREMENTS OF ALL EXISTING STRUCTURE COMPONENTS IMPACTED BY THE NEW WORK TO ASSURE CONSISTENCY WITH THE PROPOSED MODIFICATIONS. THE CONTRACTOR SHALL NOTIFY THE RESIDENT OF ANY EXISTING CONDITIONS THAT DO NOT MATCH THE AS-BUILT DRAWINGS OR THESE PLANS PRIOR TO ADVANCING THE WORK. SHOP DRAWINGS REQUIRED FOR VARIOUS ITEMS OF WORK SHALL INDICATE THE ACTUAL FIELD MEASUREMENTS AND SHALL BE SO NOTED.
2. THE CONTRACTOR SHALL TAKE SPECIAL CARE AND PRECAUTION TO ENSURE THAT NO DEBRIS FALLS, SPILLS OR ROLLS ONTO THE OPEN ROADWAY DURING CONSTRUCTION.
3. ANY DAMAGE TO EXISTING CONCRETE OR REINFORCING RESULTING FROM THE WORK PERFORMED SHALL BE REPAIRED OR REPLACED BY A METHOD APPROVED BY THE RESIDENT AT NO COST TO THE AUTHORITY.
4. ALL CONSTRUCTION SIGNING AND TRAFFIC CONTROL MEASURES SHALL BE IN PLACE BEFORE CONSTRUCTION WORK BEGINS.
5. WHERE DRILLING AND ANCHORING OF REINFORCING STEEL IS SPECIFIED THE CONTRACTOR SHALL USE A MATERIAL LISTED ON THE MAINEDOT PREQUALIFIED LIST OF CHEMICAL ANCHORING MATERIALS. THE DEPTH OF EMBEDMENT SHALL BE SUFFICIENT TO DEVELOP 125% OF THE YIELD STRENGTH OF THE BAR, BUT SHALL BE NO LESS THAN THE MINIMUM DEPTH OF EMBEDMENT WHEN SPECIFIED. WHERE MINIMUM EMBEDMENT DEPTHS HAVE NOT BEEN SPECIFIED, BAR LENGTHS HAVE BEEN DEVELOPED BASED ON AN ASSUMED EMBEDMENT DEPTH 12" FOR ALL BAR SIZES. THE CONTRACTOR SHALL VERIFY THE REQUIRED DEPTH OF EMBEDMENT AND ADJUST THE REQUIRED BAR LENGTHS AS NEEDED.
6. WHERE DRILLING AND GROUTING OF GFRP REINFORCEMENT IS SPECIFIED THE CONTRACTOR SHALL USE A MATERIAL APPROVED BY THE GFRP REINFORCEMENT MANUFACTURER. THE DEPTH OF EMBEDMENT SHALL BE SUFFICIENT TO DEVELOP THE FRACTURE STRENGTH OF THE BAR, BUT SHALL BE NO LESS THAN THE MINIMUM LENGTH OF EMBEDMENT WHEN SPECIFIED OR THE MANUFACTURER'S RECOMMENDATIONS, WHICHEVER IS GREATER. WHERE MINIMUM EMBEDMENT LENGTHS HAVE NOT BEEN SPECIFIED, BAR LENGTHS HAVE BEEN DEVELOPED BASED ON AN ASSUMED DEPTH OF EMBEDMENT OF 12" FOR #6 BARS. THE CONTRACTOR SHALL VERIFY THE REQUIRED EMBEDMENT LENGTHS AS REQUIRED.
7. THE CONTRACTOR SHALL SAWCUT CONCRETE IN ALL TOLL LANES FOR DEMOLITION (FULL DEPTH LONGITUDINAL CUTS 6" OR LESS FROM ISLAND CURBS ALONG EACH SIDE OF THE LANE ADJACENT TO AN ISLAND). ALL CONCRETE BETWEEN THE SAW CUT AND THE ISLAND CURBS SHALL ALSO BE REMOVED BY THE CONTRACTOR. THE JOINT AT THE FACE OF CURB SHALL BE VERTICAL, CLEAN, AND TO THE SATISFACTION OF THE RESIDENT. METHODS OR ACTIVITIES THAT PROVE DETRIMENTAL TO THE CONSTRUCTION OF SOUND JOINTS, THE CURB, OR THE TOLL ISLAND WILL BE DISCONTINUED. WORK SHALL BE INCIDENTAL TO ITEM 202.12 - REMOVING EXISTING STRUCTURAL CONCRETE.
8. STRUCTURAL SLAB DEPTHS AVERAGE 12", BUT AT EXISTING TREADLE AREAS DEPTHS CAN VARY FROM 18" TO 30" WITH REINFORCED CONCRETE. LIMITS OF THIS EXTRA DEPTH TREADLE HAUNCH AREA VARIES.
9. THE CONTRACTOR SHALL PROVIDE SOFT CUT JOINTS AS NOTED ON PLANS OR AS DIRECTED BY THE RESIDENT. THIS WORK SHALL BE INCIDENTAL TO ITEM 502.262 - STRUCTURAL CONCRETE ROADWAY SLAB ON GRADE.
10. ALL STRUCTURAL CONCRETE FOR ROADWAY SLAB ON GRADE (ITEM 502.262) SHALL BE CLASS AAA DECK CONCRETE AND CONTAIN 5 LBS PER CY OF SYNTHETIC FIBER REINFORCEMENT.
11. ALL EXISTING MATERIALS WHICH ARE REMOVED FROM THE WORK AREA SHALL BE REMOVED FROM THE SITE AND PROPERLY DISPOSED OF BY THE CONTRACTOR IN A MANNER IN ACCORDANCE WITH THE MAINE DEPARTMENT OF ENVIRONMENTAL PROTECTION SOLID WASTE REGULATIONS. THESE EXISTING MATERIALS INCLUDE, BUT ARE NOT LIMITED TO, CONCRETE, METAL CASING, REINFORCING STEEL, SILT AND DEBRIS ON OR ATTACHED TO THE STRUCTURE WITHIN THE WORK AREAS. THE COST OF REMOVAL AND DISPOSAL SHALL BE INCIDENTAL TO THE COST OF THE WORK ITEMS FOR WHICH THESE REMOVALS ARE REQUIRED.
12. REMOVAL OF LOOPS, CONDUIT AND ASSOCIATED WIRING IN EXISTING CONCRETE SHALL BE INCIDENTAL TO ITEM 202.12: REMOVING EXISTING STRUCTURAL CONCRETE.
13. THE LIGHT CURTAIN HOLES IN THE ISLAND WILL BE USED FOR RELOCATION OF THE TRAFFIC CONTROL PEDESTALS. ANY ISLAND LIGHT CURTAIN HOLES NOT USED FOR REMOUNTING TRAFFIC CONTROL PEDESTALS WILL BE REPAIRED TO MATCH SURROUNDING CONCRETE. CONCRETE REPAIR FOR THE LIGHT CURTAIN HOLES WILL BE PAID FOR UNDER ITEM 518.84 - PARTIAL DEPTH CONCRETE EXCAVATION FOR CONDUIT.
14. ALL EXPOSED THREADED ROD SHALL BE CUT FLUSH WITH THE CONCRETE. ANY DISTURBED CONCRETE SHALL BE PATCHED TO THE SATISFACTION OF THE RESIDENT.
15. PREMOLDED JOINT FILLER SHALL CONFORM TO ASTM DESIGNATION D1752, TYPE I OR ASTM D5249, TYPE 2. PREMOLDED JOINT FILLER SHALL BE A NON STAINING, NON BLEEDING TYPE. PRODUCTS SUCH AS 'CERAMAR', MANUFACTURED BY W. R. MEADOWS, OR AN APPROVED EQUAL WILL BE ACCEPTABLE. CORK IS NOT AN ACCEPTABLE JOINT FILLER MATERIAL. PREMOLDED JOINT FILLER AND SELF LEVELING ELASTOMERIC SEALANT SHALL BE INCIDENTAL TO ITEM 502.262, STRUCTURAL CONCRETE, PAVEMENT SLABS.
16. SELF LEVELING ELASTOMERIC SEALANT SHALL BE SIKA FLEX 1A OR AN APPROVED EQUAL.
17. ALL REINFORCING STEEL SHALL HAVE 3" COVER UNLESS NOTED OTHERWISE.
18. CHAMFER ALL EXPOSED EDGES OF CONCRETE ¾" UNLESS NOTED OTHERWISE.
19. ALL EXPOSED CONCRETE SURFACES SHALL RECEIVE A CLEAR PROTECTIVE COATING IN ACCORDANCE WITH THE PROJECT SPECIFICATIONS.
20. COPIES OF THE AS BUILT PLANS ARE ON FILE AT THE MAINE TURNPIKE AUTHORITY. THE COMPLETENESS AND ACCURACY OF THESE PLANS IS NOT GUARANTEED.

INDEX OF DRAWINGS

STRUCTURAL GENERAL NOTES AND INDEX OF DRAWINGS	S-01
INTERCHANGE 32 - STRUCTURAL SLAB PLAN	S-02
INTERCHANGE 32 - STRUCTURAL SLAB SECTIONS	S-03
INTERCHANGE 32 - STRUCTURAL SLAB TYPICAL DETAILS	S-04
INTERCHANGE 32 - ISLAND EXTENSION DETAILS	S-05
INTERCHANGE 32 - STRUCTURAL SLAB REINFORCEMENT SCHEDULE	S-06
INTERCHANGE 32 - TOLL ISLAND PLAN AND ELEVATION	S-07
INTERCHANGE 32 - TOLL ISLAND DETAILS	S-08
INTERCHANGE 32 - TOLL ISLAND AND BOOTH ENCLOSURE DETAILS	S-09
INTERCHANGE 32 - TOLL ISLAND REINFORCEMENT SCHEDULE	S-10
INTERCHANGE 32 - CANOPY FRAMING PLAN AND DETAILS	S-11
INTERCHANGE 32 - CANOPY SECTIONS AND DETAILS	S-12
INTERCHANGE 32 - CANOPY SIGNS AND TYPICAL SECTIONS	S-13
INTERCHANGE 32 - CANOPY RAISING ELEVATION	S-14
INTERCHANGE 32 - CANOPY RAISING DETAILS	S-15
INTERCHANGE 32 - TOLL BOOTH AND ISLAND REPAIRS 1	S-16
INTERCHANGE 32 - TOLL BOOTH AND ISLAND REPAIRS 2	S-17
INTERCHANGE 36 - STRUCTURAL SLAB PLAN	S-18
INTERCHANGE 36 - STRUCTURAL SLAB SECTIONS	S-19
INTERCHANGE 36 - STRUCTURAL SLAB TYPICAL DETAILS	S-20
INTERCHANGE 36 - STRUCTURAL SLAB REINFORCEMENT SCHEDULE	S-21
INTERCHANGE 36 - TOLL BOOTH AND ISLAND REPAIRS 1	S-22
INTERCHANGE 36 - TOLL BOOTH AND ISLAND REPAIRS 2	S-23
INTERCHANGE 46 NB - STRUCTURAL SLAB PLAN	S-24
INTERCHANGE 46 NB - STRUCTURAL SLAB SECTIONS	S-25
INTERCHANGE 46 NB - STRUCTURAL SLAB TYPICAL DETAILS	S-26
INTERCHANGE 46 NB - STRUCTURAL SLAB REINFORCEMENT SCHEDULE	S-27
INTERCHANGE 46 NB - TOLL ISLAND PLAN	S-28
INTERCHANGE 46 NB - TOLL ISLAND SECTIONS	S-29
INTERCHANGE 46 NB - TOLL ISLAND ELEVATION	S-30
INTERCHANGE 46 NB - TOLL ISLAND DETAILS	S-31
INTERCHANGE 46 NB - TOLL ISLAND REINFORCEMENT SCHEDULE	S-32
INTERCHANGE 46 NB - CANOPY FRAMING PLAN AND DETAILS	S-33
INTERCHANGE 46 NB - CANOPY SECTIONS AND DETAILS	S-34
INTERCHANGE 46 NB - CANOPY SIGNS AND TYPICAL SECTIONS	S-35
INTERCHANGE 32, 36 & 46 NB - CANOPY SIGNING PLAN	S-36

Filename: 063_Structural General Notes & Dwg Index.dgn

Scale:

No.	Revision	By	Date

Designed by: HNTB

CONSULTANT PROJECT MANAGER: R. Bruce Munger, P.E.

	By	Date		By	Date
Designed	AGP	08/15	Checked	FAC	08/15
Drawn	PTA	08/15	In Charge of	RAL	08/15

HNTB CORPORATION
340 County Road, Suite 6-C
Westbrook, ME 04092
TEL (207) 774-5155
FAX (207) 228-0909

MAINE TURNPIKE

THE GOLD STAR MEMORIAL HIGHWAY

MTA PROJECT MANAGER: William Yates

INTERCHANGES 32, 36, & 46 NB
TOLL SYSTEM UPGRADES

STRUCTURAL GENERAL NOTES AND INDEX OF DRAWINGS

SHEET NUMBER: S-01

CONTRACT:2015.12

NOTES:

1. CONSTRUCT ALL TRANSVERSE JOINTS PERPENDICULAR TO THE CENTERLINE.
2. NO HOLE SHALL BE DRILLED CLOSER THAN 3" FROM THE EXISTING EDGE OF CONCRETE.
3. SELF LEVELING ELASTOMERIC SEALANT SHALL BE SIKA FLEX 1A OR AN APPROVED EQUAL AND SHALL BE INCIDENTAL TO ITEM 502.262, STRUCTURAL CONCRETE ROADWAY SLAB ON GRADE.
4. SOFT CUT JOINTS SHALL BE CUT WITHIN 4 TO 6 HOURS OF INITIAL CONCRETE SET.
5. FOR SECTIONS A-A, B-B, C-C AND D-D, SEE SHEET S-03.
6. FOR SECTIONS E-E, F-F, G-G, AND H-H, SEE SHEET S-04.
7. FOR DETAILS 1 AND 2, SEE SHEET S-04.
8. FOR REINFORCEMENT SCHEDULE OF STRUCTURAL SLAB, SEE SHEET S-06.
9. FOR ISLAND SLAB, BOOTH ENCLOSURE AND BUMPER REINFORCING, SEE SHEETS S-07, S-08, S-09, AND S-10.
10. DEMOLITION OF EXISTING ISLAND SHALL BE INCIDENTAL TO PAY ITEM 526.361 PROPOSED BARRIER.
11. THE CONTRACTOR SHALL INSTALL EPOXY GROUT (SIKA GROUT 212 OR APPROVED EQUAL) BETWEEN ISLAND CURB AND SLAB. GROUT SHALL BE INCIDENTAL TO THE 609 CURB ITEMS.

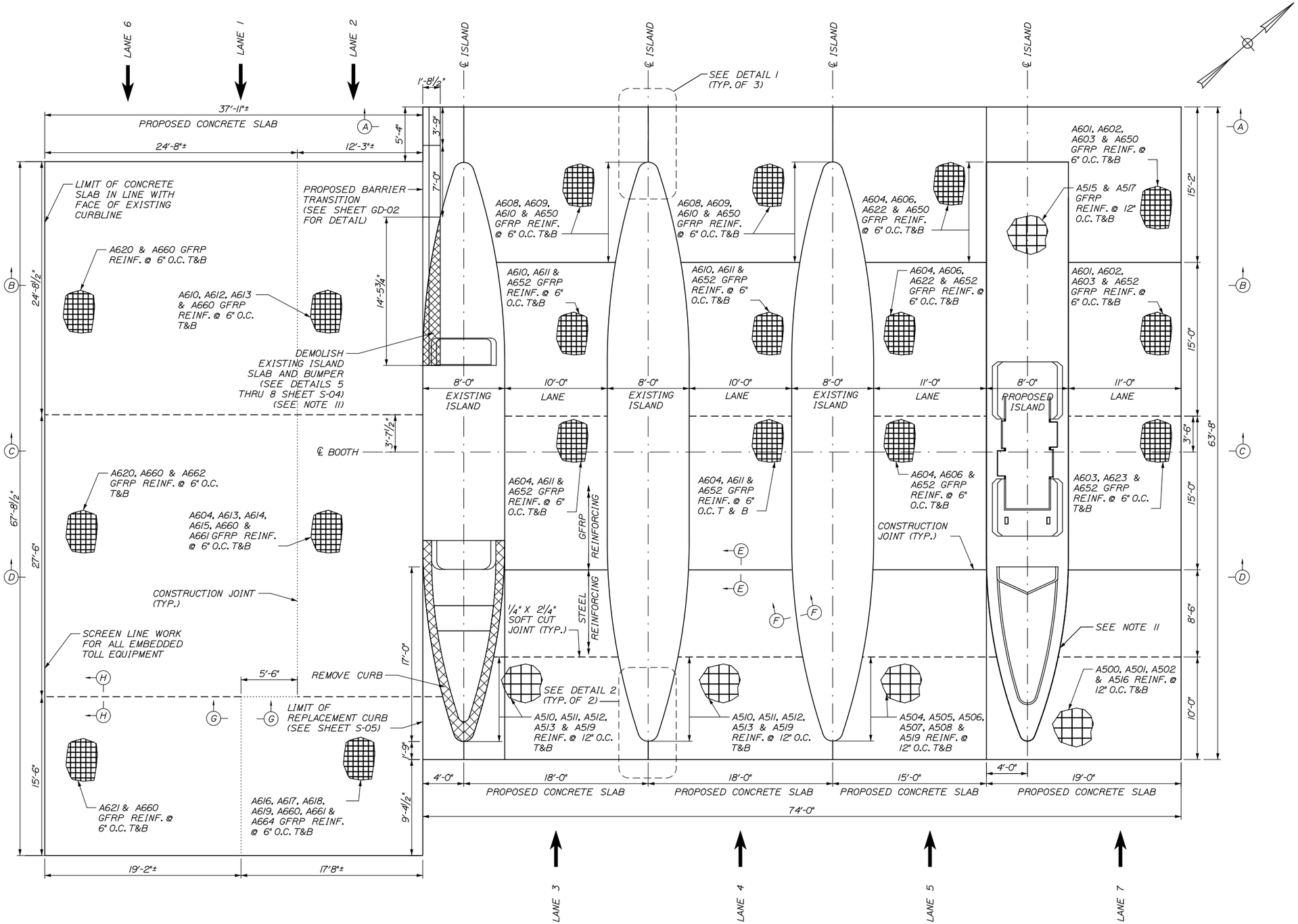

LEGEND

- CONTRACTION JOINT, SEE SECTION E-E
- CONSTRUCTION JOINT, SEE SECTION G-G
- SAWN JOINT, SEE SECTION H-H

Date:9/5/2015

Filename: 064_Exit32-PaveSlab.dgn

Scale: 5 0 5 10

No.	Revision	By	Date

Designed by: HNTB

CONSULTANT PROJECT MANAGER: R. Bruce Munger, P.E.

	By	Date		By	Date
Designed	AGP	08/15	Checked	FAC	08/15
Drawn	PTA	08/15	In Charge of	RAL	08/15

HNTB CORPORATION
340 County Road, Suite 6-C
Westbrook, ME 04092
TEL (207) 774-5155
FAX (207) 228-0909

MAINE TURNPIKE

THE GOLD STAR MEMORIAL HIGHWAY

MTA PROJECT MANAGER: William Yates

INTERCHANGES 32, 36, & 46 NB TOLL SYSTEM UPGRADES

INTERCHANGE 32 STRUCTURAL SLAB PLAN

SHEET NUMBER: S-02

CONTRACT:2015.12

NOTES:

1. ALL STEEL REINFORCEMENT FOR STRUCTURAL SLAB SHALL BE EPOXY COATED.
2. FOR STRUCTURAL SLAB PLAN, SEE SHEET S-02.
3. FOR ISLAND SLAB, BOOTH ENCLOSURE AND BUMPER BLOCK DETAILS, SEE SHEETS S-07, S-08, S-09.
4. FOR LOCATION OF SS801 BARS, SEE SHEET S-07.

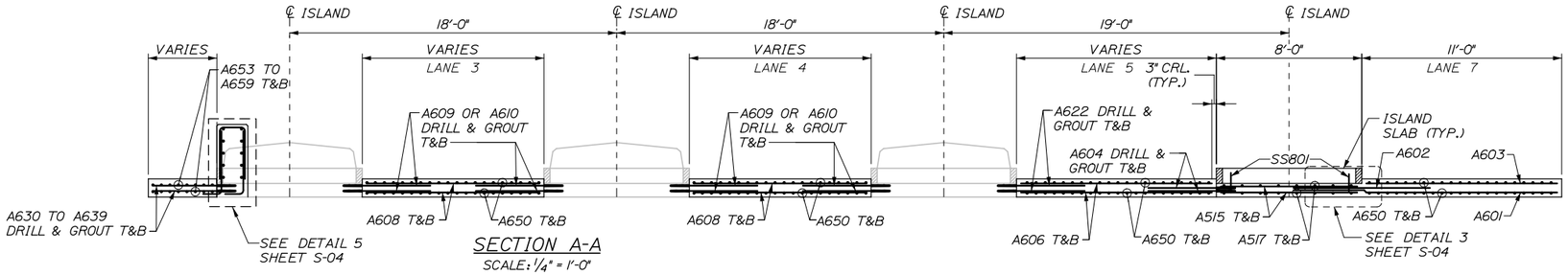

SECTION A-A
SCALE: 1/4" = 1'-0"

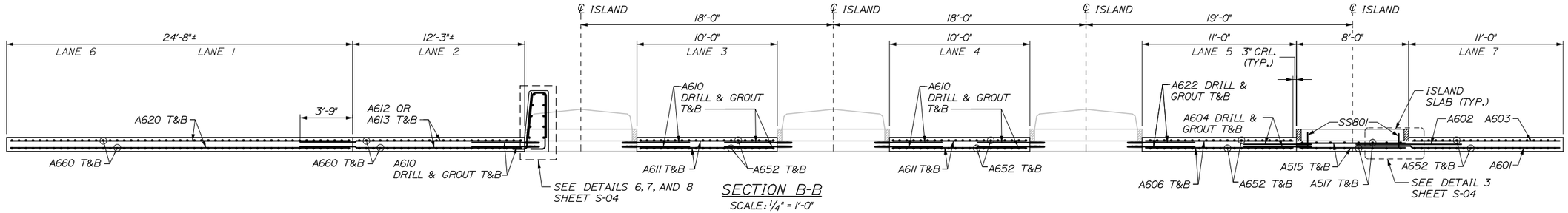

SECTION B-B
SCALE: 1/4" = 1'-0"

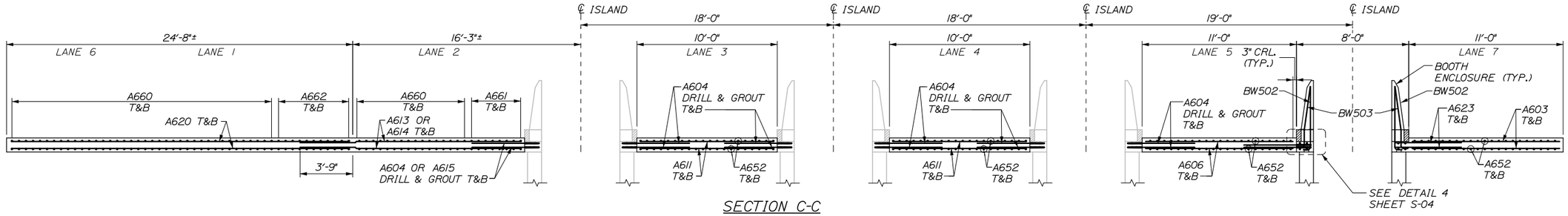

SECTION C-C
SCALE: 1/4" = 1'-0"

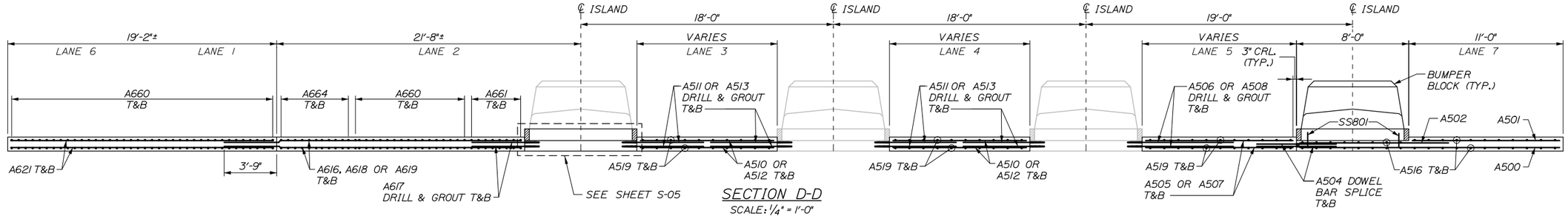

SECTION D-D
SCALE: 1/4" = 1'-0"

Date:9/5/2015

Filename: 065_Exit32_PaveSlabSects.dgn

Scale: AS NOTED	Designed by: HNTB	HNTB CORPORATION 340 County Road, Suite 6-C Westbrook, ME 04092 TEL (207) 774-5155 FAX (207) 228-0909	MAINE TURNPIKE	THE GOLD STAR MEMORIAL HIGHWAY

No.	Revision	By	Date

CONSULTANT PROJECT MANAGER: R. Bruce Munger, P.E.

	By	Date		By	Date
Designed	AGP	08/15	Checked	FAC	08/15
Drawn	PTA	08/15	In Charge of	RAL	08/15

MTA PROJECT MANAGER: William Yates

INTERCHANGES 32, 36, & 46 NB TOLL SYSTEM UPGRADES

INTERCHANGE 32 STRUCTURAL SLAB SECTIONS

SHEET NUMBER: S-03

CONTRACT:2015.12

Date:9/5/2015

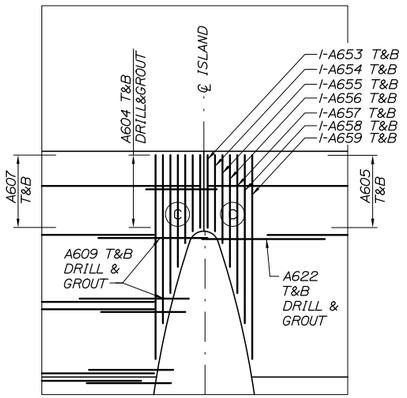

DETAIL 1
NTS

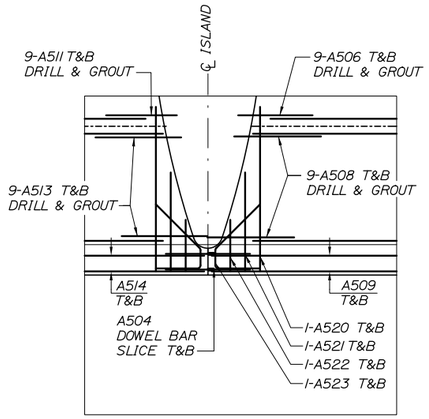

DETAIL 2
NTS

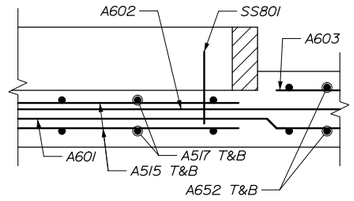

DETAIL 3
SCALE: 1" = 1'-0"

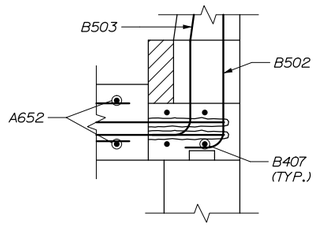

DETAIL 4
SCALE: 1" = 1'-0"

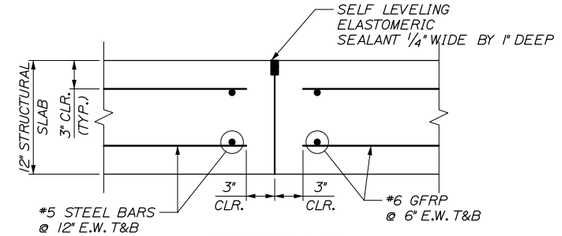

SECTION E-E
SCALE: 1½" = 1'-0"

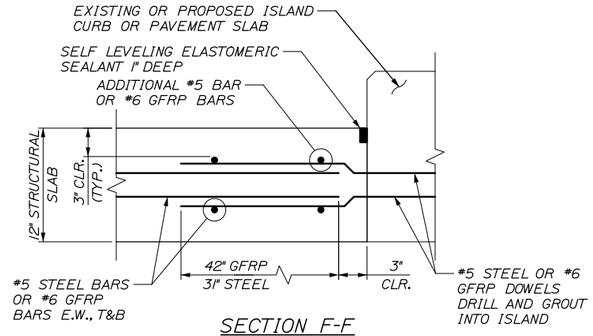

SECTION F-F
SCALE: 1½" = 1'-0"

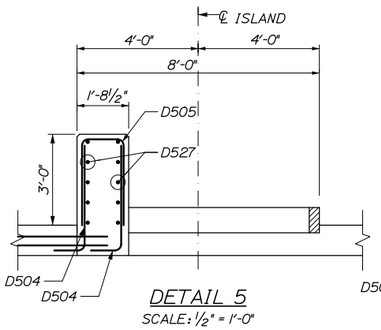

DETAIL 5
SCALE: ½" = 1'-0"

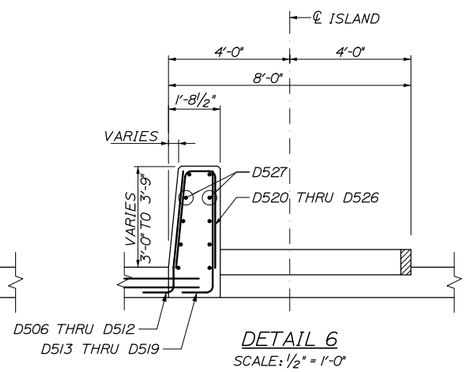

DETAIL 6
SCALE: ½" = 1'-0"

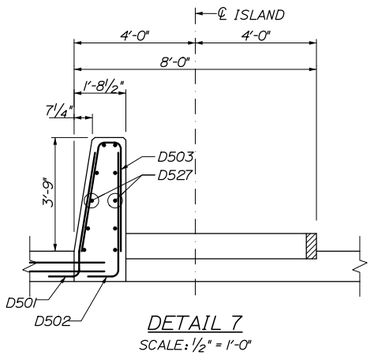

DETAIL 7
SCALE: ½" = 1'-0"

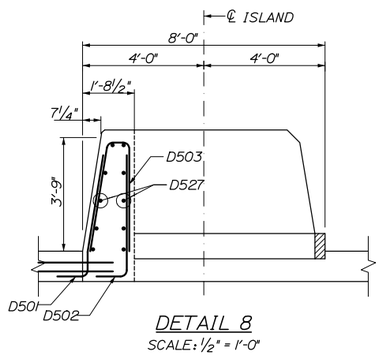

DETAIL 8
SCALE: ½" = 1'-0"

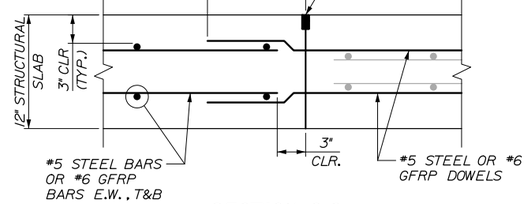

SECTION G-G
SCALE: 1½" = 1'-0"

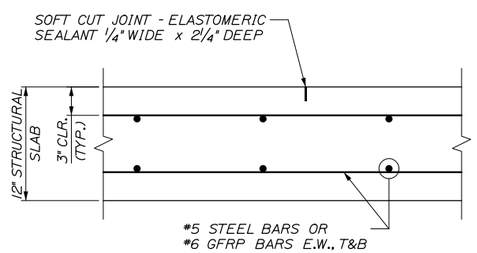

SECTION H-H
SCALE: 1½" = 1'-0"

NOTES:

Filename: 066_Exit32_PaveSlabDetails.dgn

Scale: AS NOTED

No.	Revision	By	Date

Designed by: HNTB

CONSULTANT PROJECT MANAGER: R. Bruce Munger, P.E.

	By	Date		By	Date
Designed	AGP	08/15	Checked	FAC	08/15
Drawn	PTA	08/15	In Charge of	RAL	08/15

HNTB CORPORATION
340 County Road, Suite 6-C
Westbrook, ME 04092
TEL (207) 774-5155
FAX (207) 228-0909

MAINE TURNPIKE

THE GOLD STAR MEMORIAL HIGHWAY

MTA PROJECT MANAGER: William Yates

INTERCHANGES 32, 36, & 46 NB TOLL SYSTEM UPGRADES

INTERCHANGE 32 STRUCTURAL SLAB TYPICAL DETAILS

SHEET NUMBER: S-04

CONTRACT:2015.12

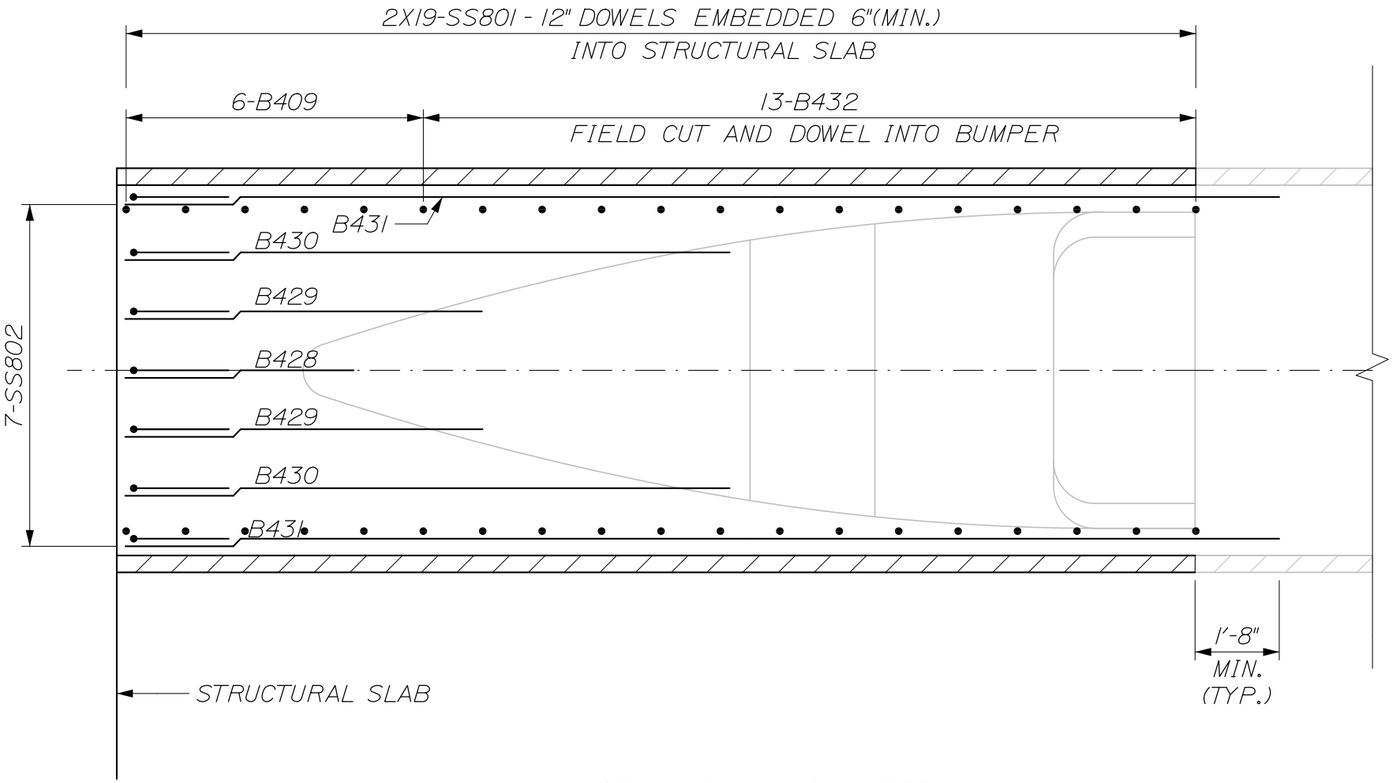

ISLAND EXTENSION PLAN

SCALE 3/8" = 1'-0"

Date:9/5/2015

Filename: 067_Exit32_Island Extension Details.dgn

Scale: N.T.S.

No.	Revision	By	Date

Designed by: HNTB

CONSULTANT PROJECT MANAGER: R. Bruce Munger, P.E.

	By	Date		By	Date
Designed	AGP	08/15	Checked	FAC	08/15
Drawn	PTA	08/15	In Charge of	RAL	08/15

HNTB CORPORATION
340 County Road, Suite 6-C
Westbrook, ME 04092
TEL (207) 774-5155
FAX (207) 228-0909

MAINE TURNPIKE

THE GOLD STAR MEMORIAL HIGHWAY

MTA PROJECT MANAGER: William Yates

INTERCHANGES 32, 36, & 46 NB
TOLL SYSTEM UPGRADES

INTERCHANGE 32
TOLL ISLAND EXTENSION DETAILS

SHEET NUMBER: S-05

CONTRACT:2015.12

Date:9/5/2015

INTERCHANGE 32 - PAVEMENT SLAB

MARK	SIZE	NO.	LENGTH	TYPE	A	B	C	D	E	F	G	INCR.	REMARKS
PAVEMENT SLAB													
A500	5	18	18' - 6"	STR									STEEL Transverse
A501	5	18	10' - 6"	STR									STEEL Transverse
A502	5	18	10' - 8"	STR									STEEL Transverse
A503	5	4	18' - 6"	STR									STEEL Transverse
A504	5	88	5' - 8"	113	2'-10"	2'-10"							DOWEL BAR SPLICE
A505	5	18	10' - 6"	STR									STEEL Transverse
A506	5	18	5' - 0"	STR									STEEL DOWELL DRILL & GROUT
A507	5	18	11' - 6"	STR									STEEL Transverse
A508	5	18	5' - 10"	STR									STEEL DOWELL DRILL & GROUT
A509	5	4	14' - 6"	STR									STEEL Transverse
A510	5	36	9' - 8"	STR									STEEL Transverse
A511	5	72	4' - 9"	STR									STEEL DOWELL DRILL & GROUT
A512	5	36	12' - 0"	STR									STEEL Transverse
A513	5	72	5' - 9"	STR									STEEL Transverse
A514	5	8	17' - 6"	STR									STEEL Transverse
A515	5	58	7' - 6"	STR									STEEL Transverse
A516	5	40	18' - 0"	STR									STEEL Longitudinal
A517	5	18	21' - 8"	STR									STEEL Longitudinal
A518	5	18	5' - 6"	STR									STEEL Longitudinal
A519	5	64	18' - 0"	STR									STEEL Longitudinal
A520	5	8	11' - 2"	STR									STEEL Longitudinal
A521	5	8	6' - 8"	STR									STEEL Longitudinal
A522	5	8	3' - 6"	STR									STEEL Longitudinal
A523	5	8	5' - 9"	17G	3'-0"	1'-6"	4'-6"						STEEL Longitudinal
SS801	8	135	1' - 0"	STR									SLAB DOWELL
SS802	8	14	3' - 10"	17		1'-0"	1'-0"	--					SLAB DOWELL END OF RAMP
A600	6	22	18' - 6"	STR									GFRP Transverse
A601	6	57	14' - 6"	STR									GFRP Transverse
A602	6	57	7' - 6"	STR									GFRP Transverse
A603	6	105	10' - 6"	STR									GFRP Transverse
A604	6	720	4' - 9"	STR									GFRP Transverse DRILL & GROUT
A605	6	22	14' - 6"	STR									GFRP Transverse
A606	6	160	10' - 6"	STR									GFRP Transverse
A607	6	44	17' - 6"	STR									GFRP Transverse
A608	6	80	11' - 3"	STR									GFRP Transverse
A609	6	80	7' - 4"	STR									GFRP Transverse DRILL & GROUT
A610	6	240	5' - 8"	STR									GFRP Transverse DRILL & GROUT
A611	6	244	9' - 6"	STR									GFRP Transverse
A612	6	20	20' - 4"	STR									GFRP Transverse
A613	6	122	19' - 6"	STR									GFRP Transverse
A614	6	50	19' - 7"	STR									GFRP Transverse
A615	6	50	6' - 8"	STR									GFRP Transverse DRILL & GROUT
A616	6	18	26' - 10"	STR									GFRP Transverse
A617	6	18	6' - 3"	STR									GFRP Transverse
A618	6	8	28' - 10"	STR									GFRP Transverse
A619	6	38	21' - 0"	STR									GFRP Transverse
A620	6	192	24' - 2"	STR									GFRP Transverse
A621	6	64	17' - 0"	STR									GFRP Transverse
A622	6	78	8' - 3"	STR									GFRP Transverse DRILL & GROUT
A623	6	48	4' - 9"	STR									GFRP Transverse
A630	6	2	6' - 5"	STR									GFRP Transverse DRILL & GROUT
A631	6	2	6' - 7"	STR									GFRP Transverse DRILL & GROUT
A632	6	2	6' - 9"	STR									GFRP Transverse DRILL & GROUT
A633	6	2	6' - 11"	STR									GFRP Transverse DRILL & GROUT
A634	6	2	7' - 1"	STR									GFRP Transverse DRILL & GROUT
A635	6	2	7' - 2"	STR									GFRP Transverse DRILL & GROUT
A636	6	2	7' - 4"	STR									GFRP Transverse DRILL & GROUT
A637	6	2	7' - 6"	STR									GFRP Transverse DRILL & GROUT
A638	6	2	7' - 7"	STR									GFRP Transverse DRILL & GROUT
A639	6	2	7' - 8"	STR									GFRP Transverse DRILL & GROUT
A640	6	22	5' - 6"	STR									GFRP Transverse DRILL & GROUT

INTERCHANGE 32 - PAVEMENT SLAB

MARK	SIZE	NO.	LENGTH	TYPE	A	B	C	D	E	F	G	INCR.	REMARKS
PAVEMENT SLAB													
A650	6	178	15' - 8"	STR									GFRP Longitudinal
A651	6	32	8' - 8"	STR									GFRP Longitudinal
A652	6	168	29' - 6"	STR									GFRP Longitudinal
A653	6	12	4' - 11"	STR									GFRP Longitudinal
A654	6	12	5' - 2"	STR									GFRP Longitudinal
A655	6	12	5' - 11"	STR									GFRP Longitudinal
A656	6	12	7' - 6"	STR									GFRP Longitudinal
A657	6	12	9' - 4"	STR									GFRP Longitudinal
A658	6	12	11' - 4"	STR									GFRP Longitudinal
A659	6	30	13' - 9"	STR									GFRP Longitudinal
A660	6	274	35' - 6"	STR									GFRP Longitudinal
A661	6	16	23' - 8"	STR									GFRP Longitudinal
A662	6	22	17' - 6"	STR									GFRP Longitudinal
A664	6	22	19' - 0"	STR									GFRP Longitudinal
B409	4	6	8' 0"	17		6"	7'-0"	6"					STEEL Island Extension
B428	4	1	5' 0"	STR									STEEL Island Extension
B429	4	2	7' 2"	STR									STEEL Island Extension
B430	4	2	11' 0"	STR									STEEL Island Extension
B431	4	2	12' 0"	STR									STEEL Island Extension
B432	4	26	4' 0"	17		6"	3'-6"						STEEL Island Extension
ISLAND - BARRER WALL													
D501	5	15	5' - 2"	17H	1'-0"	10"	3'-3"	6 1/2"					STEEL Transverse
D502	5	15	3' - 10"	17		4'-0"	1'-0"	--					STEEL Transverse
D503	5	15	6' - 6"	17G	2'-10"	9 1/2"	1'-3"						STEEL Transverse
D504	5	8	4' - 5"	17		3'-5"	1'-0"	--					STEEL Transverse
D505	5	4	5' - 7"	17		2'-1"	1'-5"	2'-1"					STEEL Transverse
D506	5	1	4' - 7"	17H	1'-0"	10"	2'-9"	--					STEEL Transverse
D507	5	1	4' - 8"	17H	1'-0"	10"	2'-10"	1"					STEEL Transverse
D508	5	1	4' - 9"	17H	1'-0"	10"	2'-11"	2"					STEEL Transverse
D509	5	1	4' - 11"	17H	1'-0"	10"	3'-1"	3"					STEEL Transverse
D510	5	1	5' - 1"	17H	1'-0"	10"	3'-2"	4"					STEEL Transverse
D511	5	1	5' - 2"	17H	1'-0"	10"	3'-3"	5"					STEEL Transverse
D512	5	1	5' - 3"	17H	1'-0"	10"	3'-4"	6"					STEEL Transverse
D513	5	1	4' - 7"	17		3'-7"	1'-0"	--					STEEL Transverse
D514	5	1	4' - 8"	17		3'-8"	1'-0"	--					STEEL Transverse
D515	5	1	4' - 9"	17		3'-9"	1'-0"	--					STEEL Transverse
D516	5	1	4' - 11"	17		3'-11"	1'-0"	--					STEEL Transverse
D517	5	1	5' - 0"	17		4'-0"	1'-0"	--					STEEL Transverse
D518	5	1	5' - 1"	17		4'-1"	1'-0"	--					STEEL Transverse
D519	5	1	5' - 2"	17		4'-2"	1'-0"	--					STEEL Transverse
D520	5	1	5' - 6"	17G	2'-1"	1'-4"	1'-4"						STEEL Transverse
D521	5	1	5' - 7"	17G	2'-2"	1'-3"	1'-4"						STEEL Transverse
D522	5	1	5' - 9"	17G	2'-4"	1'-1"	1'-4"						STEEL Transverse
D523	5	1	5' - 10"	17G	2'-5"	1'-0"	1'-4"						STEEL Transverse
D524	5	1	5' - 11"	17G	2'-6"	11"	1'-4"						STEEL Transverse
D525	5	1	6' - 3"	17G	2'-8"	10"	1'-4"						STEEL Transverse
D526	5	1	6' - 4"	17G	2'-9"	9 1/2"	1'-4"						STEEL Transverse
D527	5	10	24' - 10"	STR									STEEL Longitudinal

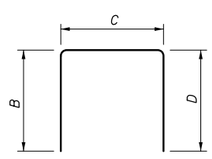

TYPE 17

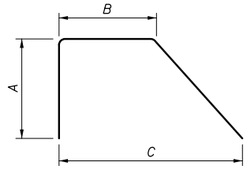

TYPE 17G

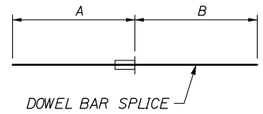

TYPE 113

Filename: 068_Exit32_PavRebarSchedule.dgn

Scale: N.T.S.

Designed by: HNTB

No.	Revision	By	Date

CONSULTANT PROJECT MANAGER: R. Bruce Munger, P.E.

	By	Date		By	Date
Designed	AGP	08/15	Checked	FAC	08/15
Drawn	PTA	08/15	In Charge of	RAL	08/15

HNTB CORPORATION
340 County Road, Suite 6-C
Westbrook, ME 04092
TEL (207) 774-5155
FAX (207) 228-0909

MAINE TURNPIKE

THE GOLD STAR MEMORIAL HIGHWAY

MTA PROJECT MANAGER: William Yates

INTERCHANGES 32, 36, & 46 NB TOLL SYSTEM UPGRADES

INTERCHANGE 32

STRUCTURAL SLAB REINFORCEMENT SCHEDULE

SHEET NUMBER: S-06

CONTRACT:2015.12

Date:9/5/2015

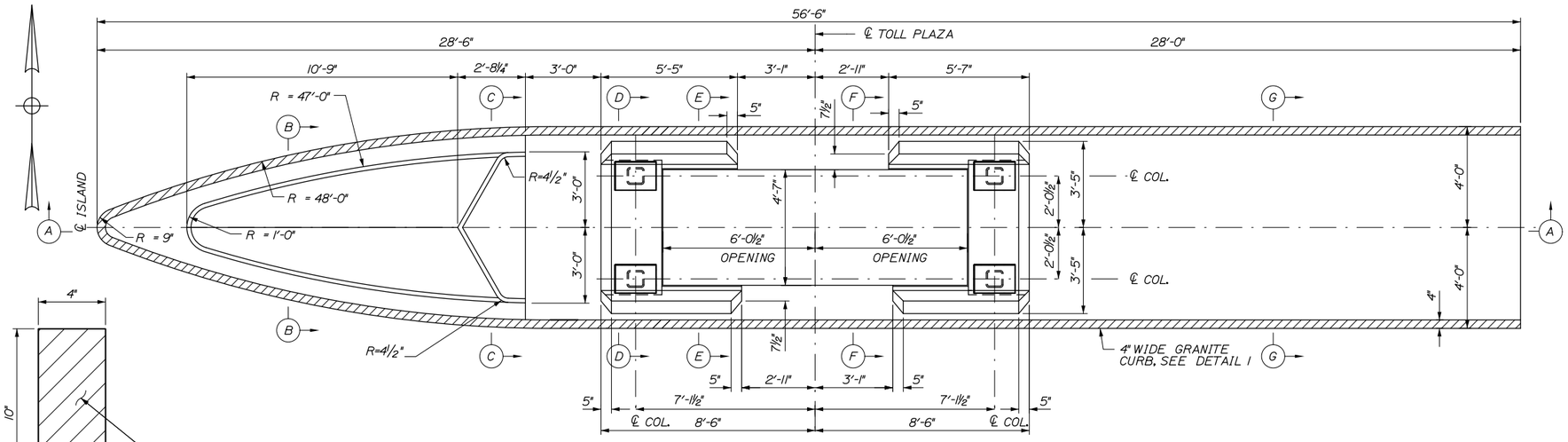

TOLL ISLAND BOOTH AND BUMPER
ISLAND PLAN VIEW
SCALE: ⅜" = 1'-0"

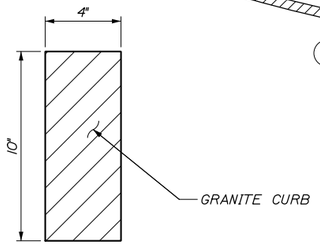

DETAIL I
NOT TO SCALE

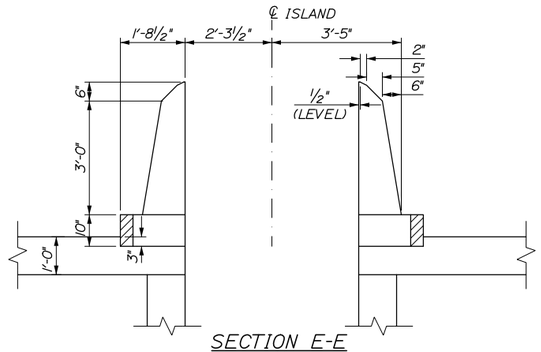

SECTION E-E
SCALE: ½" = 1'-0"

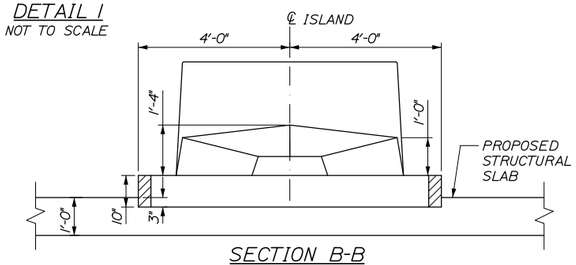

SECTION B-B
SCALE: ½" = 1'-0"

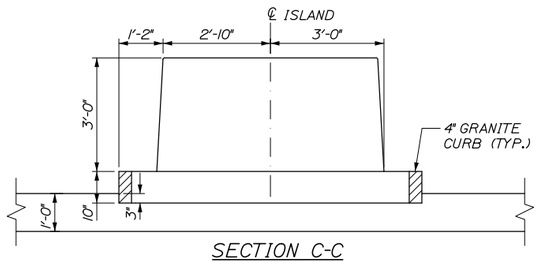

SECTION C-C
SCALE: ½" = 1'-0"

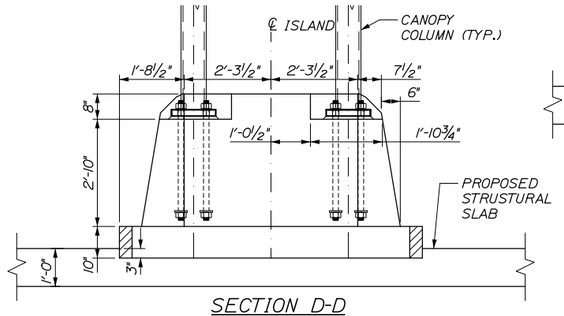

SECTION D-D
SCALE: ½" = 1'-0"

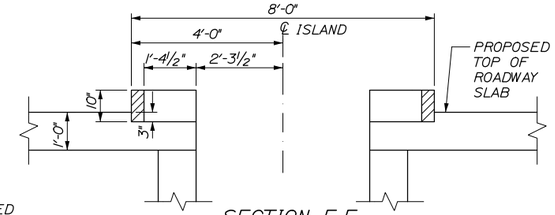

SECTION F-F
SCALE: ½" = 1'-0"

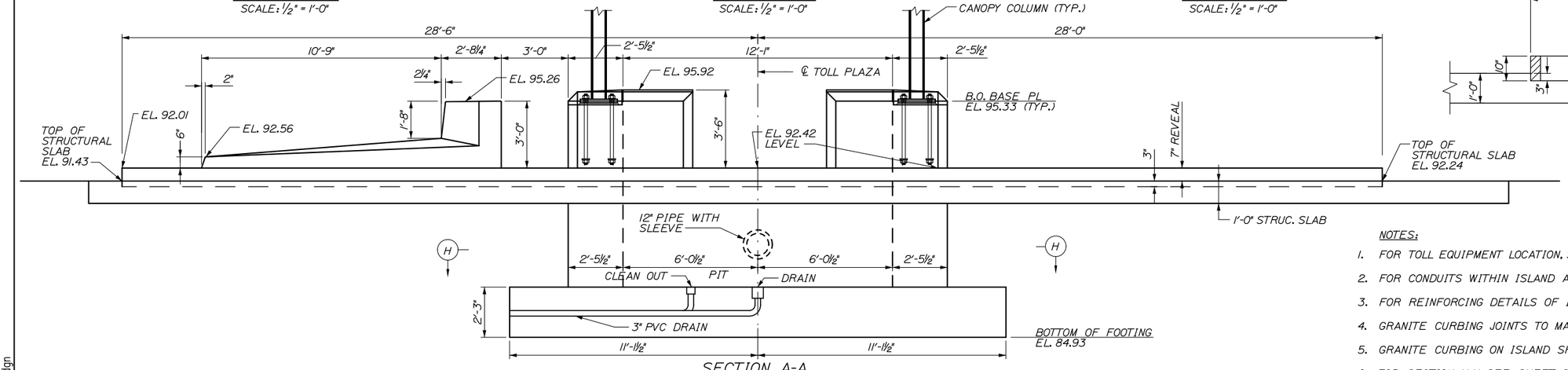

SECTION A-A
ISLAND ELEVATION VIEW
SCALE: ⅜" = 1'-0"

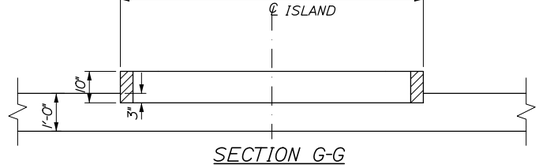

SECTION G-G
SCALE: ½" = 1'-0"

NOTES:

1. FOR TOLL EQUIPMENT LOCATION, SEE ELECTRICAL PLANS.
2. FOR CONDUITS WITHIN ISLAND AND STRUCTURAL SLAB, SEE ELECTRICAL PLANS.
3. FOR REINFORCING DETAILS OF ISLAND, SEE SHEETS S-08, S-09, S-10.
4. GRANITE CURBING JOINTS TO MATCH WITH ISLAND AND BARRIER JOINTS.
5. GRANITE CURBING ON ISLAND SHALL BE PAID FOR UNDER ITEM 609.11.
6. FOR SECTION H-H, SEE SHEET S-09.
7. TOLL BOOTH TO BE PROVIDED BY AUTHORITY. CONTRACTOR WILL TRANSPORT BOOTH FROM CUMBERLAND MAINTENANCE FACILITY.

Scale: AS NOTED

No.	Revision	By	Date

Designed by: HNTB

CONSULTANT PROJECT MANAGER: R. Bruce Munger, P.E.

	By	Date		By	Date
Designed	AGP	08/15	Checked	FAC	08/15
Drawn	PTA	08/15	In Charge of	RAL	08/15

HNTB CORPORATION
340 County Road, Suite 6-C
Westbrook, ME 04092
TEL (207) 774-5155
FAX (207) 228-0909

MAINE TURNPIKE

THE GOLD STAR MEMORIAL HIGHWAY

MTA PROJECT MANAGER: William Yates

INTERCHANGES 32, 36, & 46 NB TOLL SYSTEM UPGRADES
INTERCHANGE 32
TOLL ISLAND PLAN & ELEVATION

SHEET NUMBER: S-07

CONTRACT:2015.12

Filename: 069_Exit32_TollIsland Layout.dgn

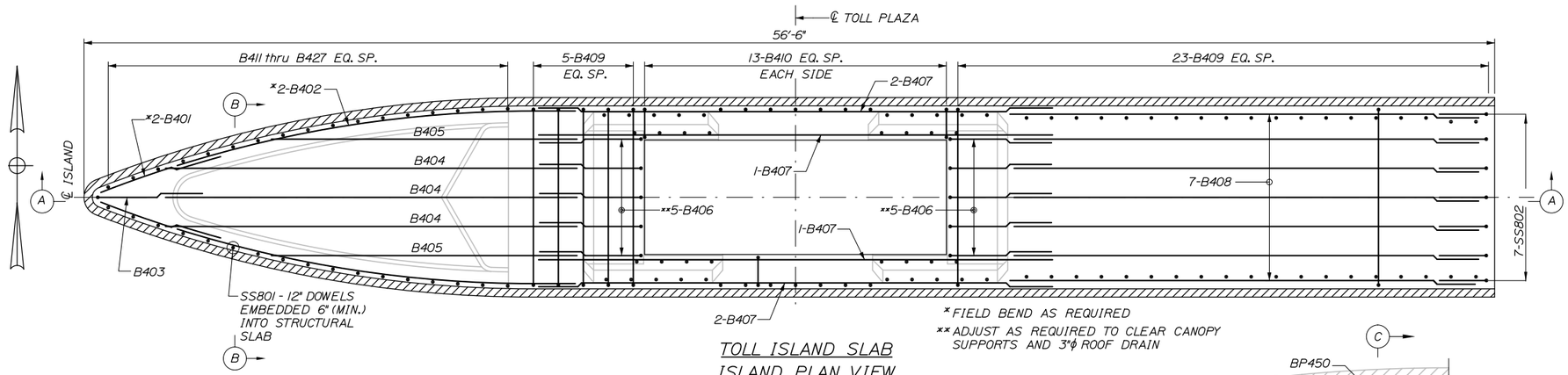

*FIELD BEND AS REQUIRED

**ADJUST AS REQUIRED TO CLEAR CANOPY SUPPORTS AND 3"ϕ ROOF DRAIN

TOLL ISLAND SLAB ISLAND PLAN VIEW

SCALE: 3/8"=1'-0"

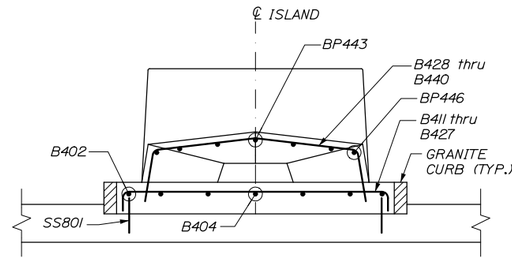

SECTION B-B

SCALE: 1/2"=1'-0"

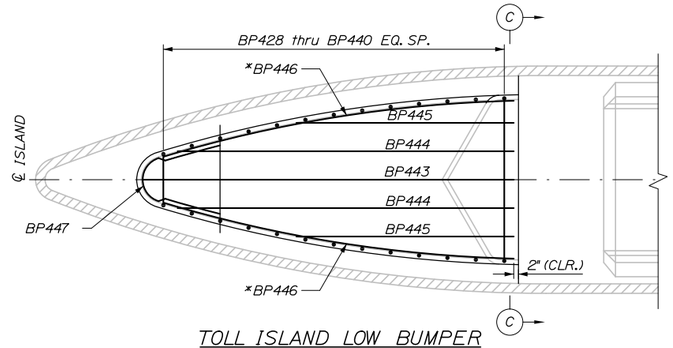

TOLL ISLAND LOW BUMPER PLAN VIEW

SCALE: 3/8"=1'-0"

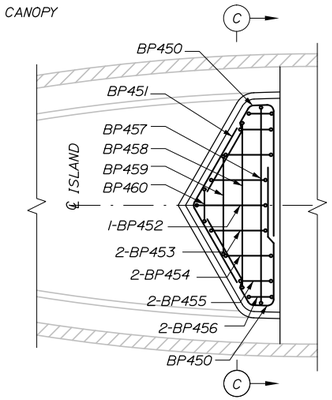

TOLL ISLAND UPPER BUMPER PLAN VIEW

SCALE: 1/2"=1'-0"

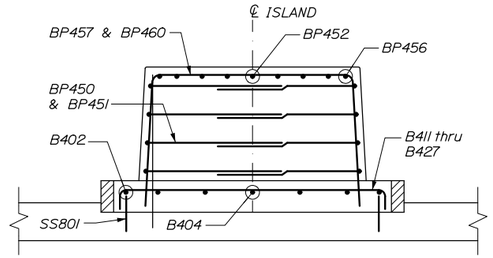

SECTION C-C

SCALE: 1/2"=1'-0"

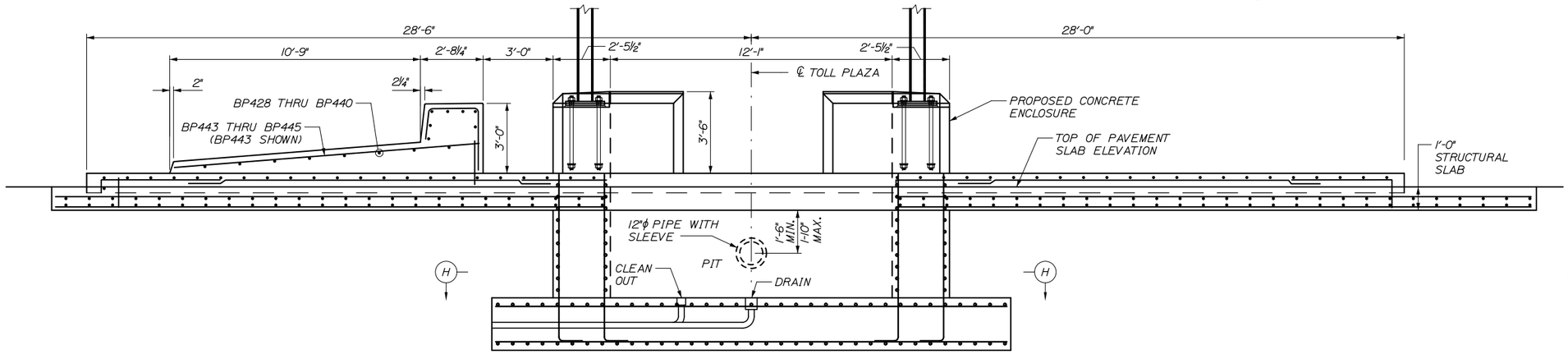

SECTION A-A ISLAND ELEVATION VIEW

SCALE: 3/8"=1'-0"

NOTES:

1. ALL STEEL REINFORCEMENT SHALL BE EPOXY COATED.
2. EXPOSED ISLAND CONCRETE SHALL RECEIVE A CLEAR PROTECTION COATING PER SPECIFICATIONS.
3. FOR PIT REINFORCEMENT, SEE SHEET S-09.
4. FOR STRUCTURAL SLAB REINFORCEMENT, SEE SHEETS S-02, S-03, S-04.
5. FOR BOOTH ENCLOSURE REINFORCING, SEE SHEET S-09.
6. FOR REINFORCEMENT SCHEDULE, SEE SHEET S-10.

Date:9/5/2015

Filename: 070_Exit32_TollIsland Details.dgn

Scale: AS NOTED

No.	Revision	By	Date

Designed by: HNTB

CONSULTANT PROJECT MANAGER: R. Bruce Munger, P.E.

	By	Date		By	Date
Designed	AGP	08/15	Checked	FAC	08/15
Drawn	PTA	08/15	In Charge of	RAL	08/15

HNTB CORPORATION
340 County Road, Suite 6-C
Westbrook, ME 04092
TEL (207) 774-5155
FAX (207) 228-0909

MAINE TURNPIKE

THE GOLD STAR MEMORIAL HIGHWAY

MTA PROJECT MANAGER: William Yates

INTERCHANGES 32, 36, & 46 NB TOLL SYSTEM UPGRADES

INTERCHANGE 32 TOLL ISLAND DETAILS

SHEET NUMBER: S-08

CONTRACT:2015.12

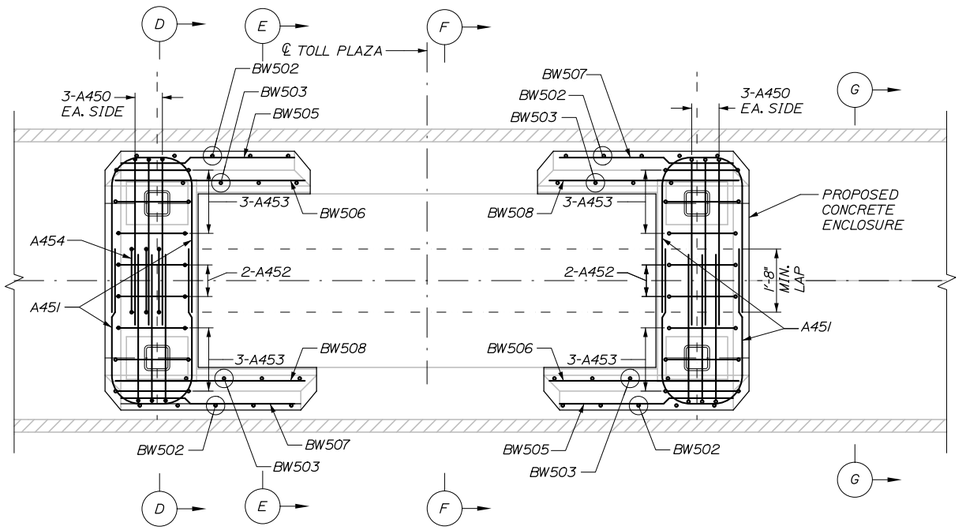

TOLL ISLAND BOOTH ENCLOSURE PLAN VIEW

SCALE: ½"=1'-0"

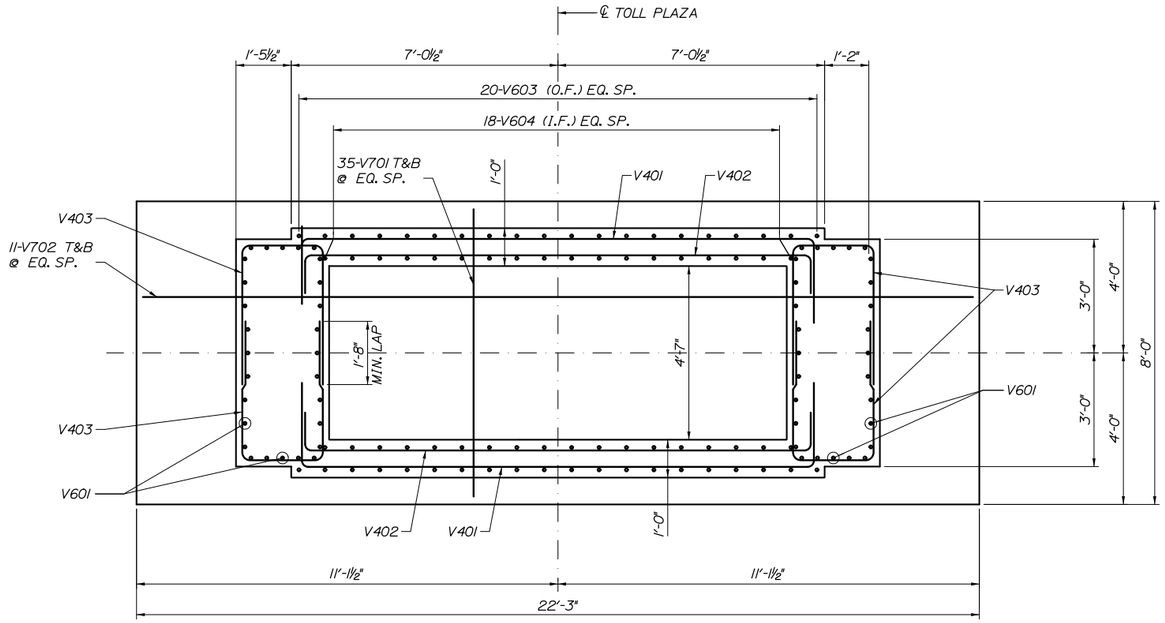

SECTION H-H

SCALE: ½" = 1'-0"

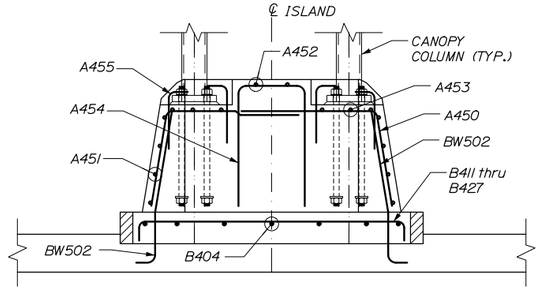

SECTION D-D

SCALE: ½"=1'-0"

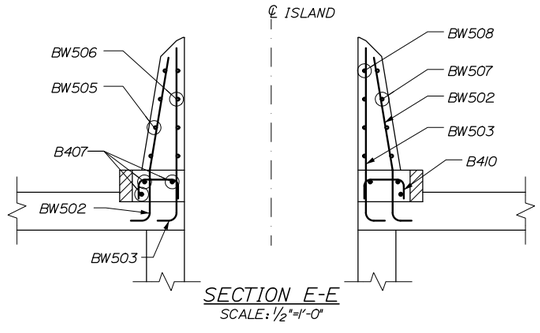

SECTION E-E

SCALE: ½"=1'-0"

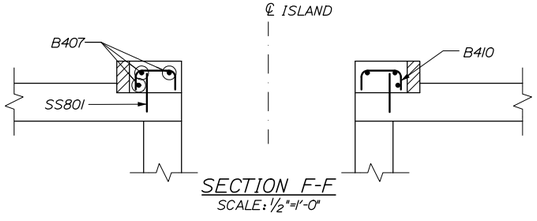

SECTION F-F

SCALE: ½"=1'-0"

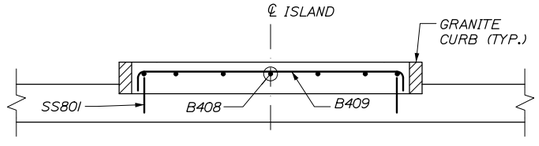

SECTION G-G

SCALE: ½"=1'-0"

NOTES:

1. FOR ISLAND SLAB, BOOTH ENCLOSURE AND BUMPER BLOCK LAYOUT, SEE SHEET S-07.
2. FOR REINFORCEMENT SCHEDULE, SEE SHEET S-10.

Date:9/5/2015

Filename: 071_Exit32_TollIsland Booth Enclosure.dgn

Scale: AS NOTED	Designed by: HNTB	HNTB CORPORATION 340 County Road, Suite 6-C Westbrook, ME 04092 TEL (207) 774-5155 FAX (207) 228-0909	MAINE TURNPIKE	THE GOLD STAR MEMORIAL HIGHWAY	INTERCHANGES 32, 36, & 46 NB TOLL SYSTEM UPGRADES

No.	Revision	By	Date

CONSULTANT PROJECT MANAGER: R. Bruce Munger, P.E.

	By	Date		By	Date
Designed	AGP	08/15	Checked	FAC	08/15
Drawn	PTA	08/15	In Charge of	RAL	08/15

MTA PROJECT MANAGER: William Yates

INTERCHANGE 32
TOLL ISLAND BOOTH ENCLOSURE DETAILS

SHEET NUMBER: S-09

CONTRACT:2015.12

Date:9/5/2015

INTERCHANGE 32 - TOLL ISLAND

MARK	SIZE	NO.	LENGTH	TYPE	A	B	C	D	E	F	G	INCR	REMARKS
ISLAND - SLAB													
B401	4	2	5' - 0"	STR									* FIELD BEND AS REQUIRED
B402	4	2	16' - 3"	STR									* FIELD BEND AS REQUIRED
B403	4	1	6' - 0"	17		6"	5'-6"						
B404	4	3	16' - 6"	STR									
B405	4	2	12' - 3"	STR									
B406	4	10	6' - 0"	17		6"	5'-6"						
B407	4	6	20' - 9"	STR									
B408	4	7	19' - 6"	STR									
B409	4	28	8' - 0"	17		6"	7'-0"	6"					
B410	4	26	2' - 0"	17		6"	1'-0"	6"					
B411	4	1	7' - 11"	17		6"	6'-11"	6"					
B412	4	1	7' - 10"	17		6"	6'-10"	6"					
B413	4	1	7' - 9"	17		6"	6'-9"	6"					
B414	4	1	7' - 7"	17		6"	6'-7"	6"					
B415	4	1	7' - 5"	17		6"	6'-5"	6"					
B416	4	1	7' - 2"	17		6"	6'-2"	6"					
B417	4	1	6' - 10"	17		6"	5'-10"	6"					
B418	4	1	6' - 7"	17		6"	5'-7"	6"					
B419	4	1	6' - 2"	17		6"	5'-2"	6"					
B420	4	1	5' - 9"	17		6"	4'-9"	6"					
B421	4	1	5' - 4"	17		6"	4'-4"	6"					
B422	4	1	4' - 10"	17		6"	3'-10"	6"					
B423	4	1	4' - 3"	17		6"	3'-3"	6"					
B424	4	1	3' - 9"	17		6"	2'-9"	6"					
B425	4	1	3' - 1"	17		6"	2'-1"	6"					
B426	4	1	2' - 4"	17		6"	1'-4"	6"					
B427	4	1	1' - 8"	17		6"	8"	6"					

MARK	SIZE	NO.	LENGTH	TYPE	A	B	C	D	E	F	G	INCR	REMARKS
ISLAND - FRONT BUMPER BLOCK													
BP428	4	1	8' - 5"	17D	3 3/4"	1'-7"	2"	2'-7"					
BP429	4	1	8' - 1"	17D	4 1/2"	1'-6"	2"	2'-6"					
BP430	4	1	7' - 11"	17D	4 3/4"	1'-5"	2"	2'-6"					
BP431	4	1	7' - 9"	17D	4 1/2"	1'-5"	2"	2'-5"					
BP432	4	1	7' - 5"	17D	4"	1'-4"	2"	2'-4"					
BP433	4	1	7' - 1"	17D	3 1/2"	1'-4"	2"	2'-2"					
BP434	4	1	6' - 7"	17D	3"	1'-3"	2"	2'-0"					
BP435	4	1	6' - 3"	17D	2 1/2"	1'-3"	2"	1'-10"					
BP436	4	1	5' - 8"	17D	2"	1'-2"	2"	1'-8"					
BP437	4	1	5' - 3"	17D	1 3/4"	1'-2"	2"	1'-5"					
BP438	4	1	4' - 6"	17D	1 1/4"	1'-1"	2"	1'-2"					
BP439	4	1	4' - 0"	17D	1"	1'-1"	2"	11"					
BP440	4	1	3' - 4"	17D	--	1'-0"	2"	8"					
BP443	4	1	13' - 0"	STR									
BP444	4	2	11' - 10"	STR									
BP445	4	2	7' - 7"	STR									
BP446	4	2	12' - 6"	STR									* FIELD BEND AS REQUIRED
BP447	4	1	7' - 0"	13A	2'-5"	2'-9"	2'-9"						R=9 1/2" (INSIDE RADIUS)
BP450	4	8	7' - 0"	17F	3'-6"	6 1/2"	2'-4"	2'-0"					R=2" (INSIDE RADIUS)
BP451	4	4	4' - 10"	17D	1'-2"	--	--	2'-1"					
BP452	4	1	9' - 2"	17G	3'-6"	2'-1"	2'-6"						
BP453	4	2	8' - 10"	17G	3'-6"	1'-9"	2'-1"						
BP454	4	2	8' - 5"	17G	3'-6"	1'-4"	1'-8"						
BP455	4	2	8' - 0"	17G	3'-6"	11"	1'-3"						
BP456	4	2	7' - 9"	17G	3'-6"	8 1/2"	1'-1"						
BP457	4	1	12' - 3"	17C	3'-6"	2 1/2"	5'-2"						
BP458	4	1	11' - 5"	17C	3'-6"	2 1/2"	4'-4"						
BP459	4	1	9' - 8"	17C	3'-6"	2 1/2"	2'-7"						
BP460	4	1	7' - 11"	17C	3'-6"	2 1/2"	10"						

INTERCHANGE 32 - TOLL ISLAND

MARK	SIZE	NO.	LENGTH	TYPE	A	B	C	D	E	F	G	INCR.	REMARKS
ISLAND - BOOTH ENCLOSURE AND BARRIER WALL													
A450	4	12	6' - 1"	17C	2'-6"	5"	3'-6"						
A451	4	16	10' - 4"	17A		4'-1"	2'-2"	4'-1"					R=8 1/2" (INSIDE RADIUS)
A452	4	4	7' - 11"	17		3'-2"	1'-7"	3'-2"					
A453	4	12	7' - 0'	17		2'-6"	2'-0"	2'-6"					
A454	4	6	7' - 11"	17		3'-1"	1'-9"	3'-1"					
A455	4	24	2' - 0"	17		1'-0"	6"	--					GRADE 40, FIELD BEND
BW502	5	20	5' - 5'	17E	1'-0"	1'-4"	3'-0"	6"					
BW503	5	16	5' - 7'	17		1'-0"	4'-7"	--					
BW505	5	8	4' - 6'	STR									
BW506	5	8	5' - 0'	STR									
BW507	5	8	4' - 7'	STR									
BW508	5	8	5' - 1"	STR									
			-										

MARK	SIZE	NO.	LENGTH	TYPE	A	B	C	D	E	F	G	INCR.	REMARKS
ISLAND - UTILITY VAULT													
V401	4	9	18' - 7'	17		2'-6"	13'-7"	2'-6"					
V402	4	9	15' - 7'	17		1'-0"	13'-7"	1'-0"					
V403	4	36	10' - 2'	17		4'-0"	2'-2'	4'-0"					
V601	6	56	10' - 7'	17		1'-0"	9'-7"	--					
V603	6	40	7' - 3'	17		1'-0"	6'-3"	--					
V604	6	36	6' - 0'	STR									
V701	7	70	7' - 7'	STR									
V702	7	22	21' - 9'	STR									

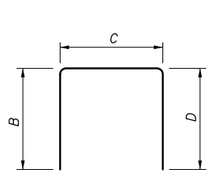

TYPE 17

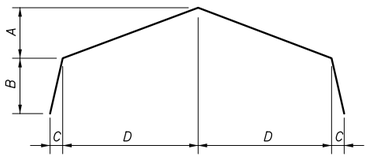

TYPE 17D

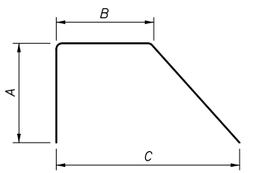

TYPE 17G

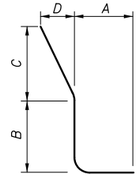

TYPE 17E

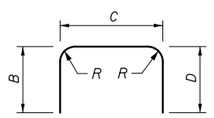

TYPE 17A

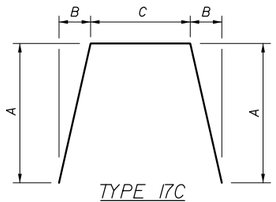

TYPE 17C

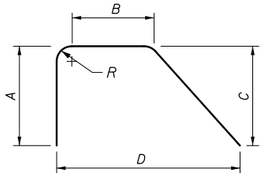

TYPE 17F

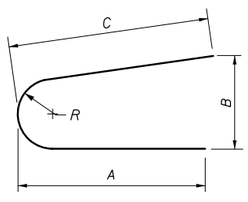

TYPE 13A

Filename: 072_Exit32_TollIslandRebarSchedule.dgn

Scale: N.T.S.

No.	Revision	By	Date

Designed by: HNTB

CONSULTANT PROJECT MANAGER: R. Bruce Munger, P.E.

	By	Date		By	Date
Designed	AGP	08/15	Checked	FAC	08/15
Drawn	PTA	08/15	In Charge of	RAL	08/15

HNTB CORPORATION
340 County Road, Suite 6-C
Westbrook, ME 04092
TEL (207) 774-5155
FAX (207) 228-0909

MAINE TURNPIKE

THE GOLD STAR MEMORIAL HIGHWAY

MTA PROJECT MANAGER: William Yates

INTERCHANGES 32, 36, & 46 NB
TOLL SYSTEM UPGRADES
INTERCHANGE 32
TOLL ISLAND REINFORCEMENT SCHEDULE

SHEET NUMBER: S-10

CONTRACT:2015.12

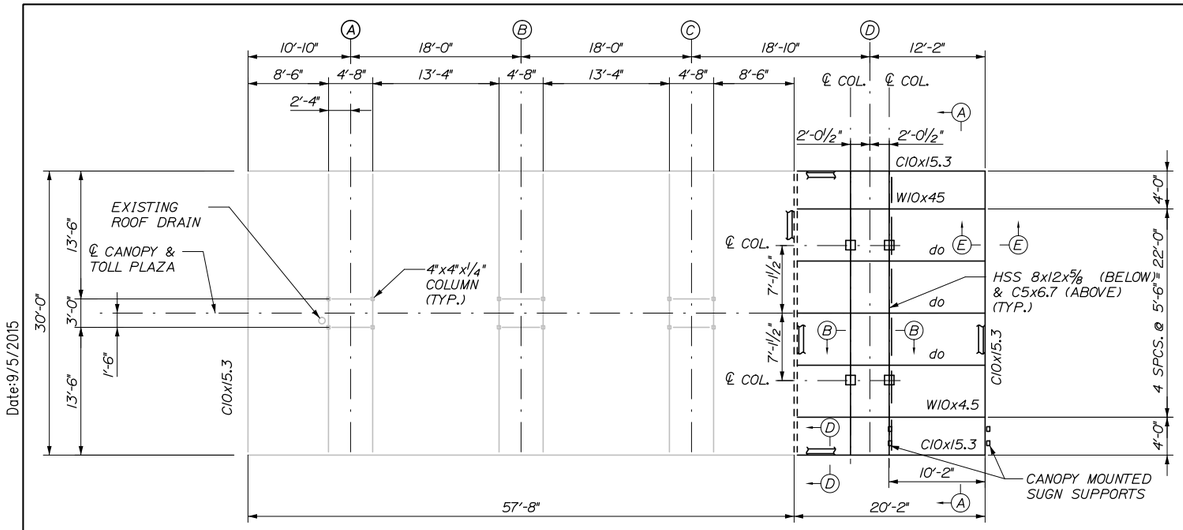

FRAMING PLAN - TOLL PLAZA CANOPY

SCALE: ⅛" = 1'-0"

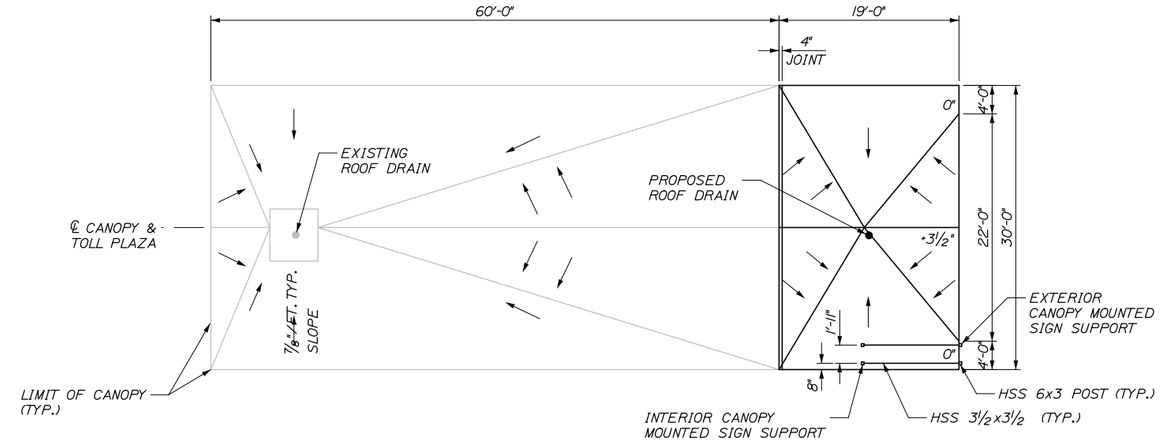

CANOPY CRICKET DETAIL

SCALE: ⅛" = 1'-0"

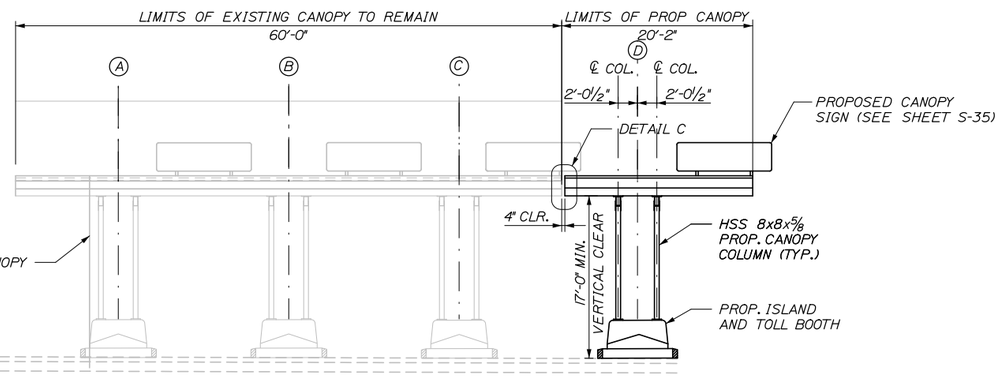

ELEVATION - TOLL PLAZA CANOPY

SCALE: ⅛" = 1'-0"

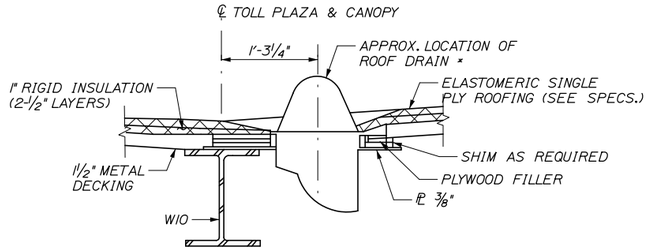

SECTION K-K

1½"=1'-0"

* NOTE: FOR ADDITIONAL DETAILS FOR THE INSTALLATION OF ROOF DRAIN, SEE MECHANICAL DRAWINGS.

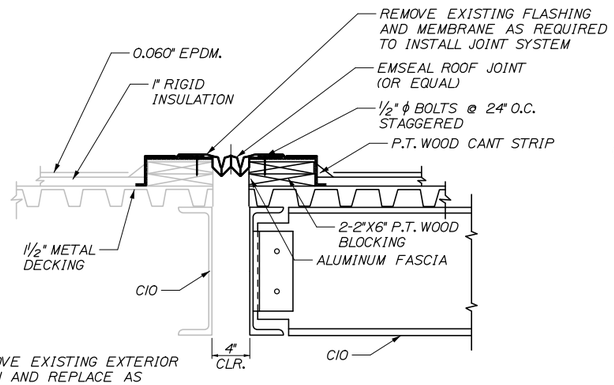

* NOTE: REMOVE EXISTING EXTERIOR SIGN COLUMN AND REPLACE AS SHOWN IN DETAIL 1 SHEET S-13.

DETAIL C

NTS

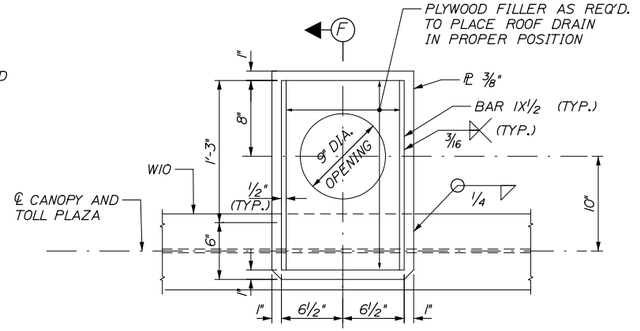

DETAIL A

1 1/2"=1'-0"

NOTES:

1. FOR SECTIONS A-A, B-B, C-C, D-D AND E-E SEE SHEET S-12.
2. STRUCTURAL STEEL FOR CANOPY FRAMING SHALL CONFORM TO THE FOLLOWING: ANGLES, PLATES AND CHANNELS -ASTM A572 GRADE 50. WIDE FLANGE SECTIONS -ASTM A992. HOLLOW STRUCTURAL SECTIONS (HSS) -ASTM A500 GRADE B.
3. CONNECTION BETWEEN STEEL ELEMENTS SHALL BE MADE WITH EITHER ASTM A325 HIGH STRENGTH BOLTS OR WELD MATERIAL CONFORM TO E70XX. MINIMUM BOLT SIZE SHALL BE ¾"ϕ UNLESS NOTED OTHERWISE IN STANDARD HOLES. MINIMUM WELD SIZE SHALL BE ¼" INCH UNLESS NOTED OTHERWISE.
4. ANCHOR RODS SHALL CONFORM TO ASTM F1554 GRADE 55, AND SHALL BE HOT DIPPED GALVANIZED IN ACCORDANCE WITH ASTM A153.
5. METAL ROOF DECK SHALL CONFORM TO ASTM A653, STRUCTURAL GRADE 33, AND SHALL HAVE ZINC COATED FINISH OF G-90 OR BETTER MINIMUM; GAGE OF 18 WITH THE FOLLOW MINIMUM CROSS SECTIONAL PROPERTIES.
   IP = 0.289 in4/ft SP = 0.318 in4/ft
   IN = 0.295 in4/ft SN = 0.327 in4/ft
6. FOR CANOPY RAISING DETAILS, SEE SHEET S-14 AND S-15.

Date:9/5/2015

Filename: 073_Exit32_Prop Canopy Framing & Dets.dgn

Scale: AS NOTED

Designed by: HNTB

No.	Revision	By	Date

CONSULTANT PROJECT MANAGER: R. Bruce Munger, P.E.

	By	Date		By	Date
Designed	AGP	08/15	Checked	FAC	08/15
Drawn	PTA	08/15	In Charge of	RAL	08/15

HNTB CORPORATION
340 County Road, Suite 6-C
Westbrook, ME 04092
TEL (207) 774-5155
FAX (207) 228-0909

MAINE TURNPIKE

THE GOLD STAR MEMORIAL HIGHWAY

MTA PROJECT MANAGER: William Yates

INTERCHANGES 32, 36, & 46 NB
TOLL SYSTEM UPGRADES

INTERCHANGE 32
CANOPY FRAMING PLAN AND DETAILS

SHEET NUMBER: S-11

CONTRACT:2015.12

Date:9/5/2015

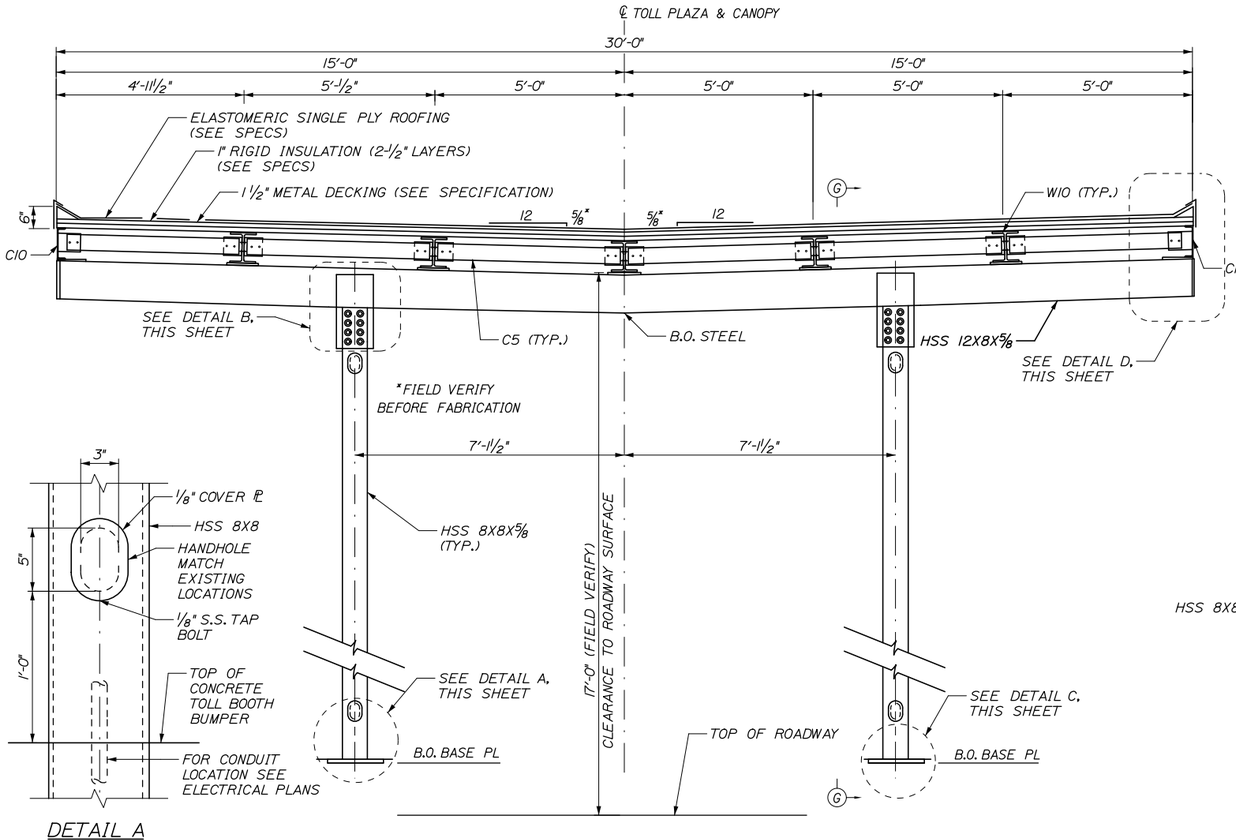

SECTION A-A
NTS

DETAIL A
2" = 1'-0"

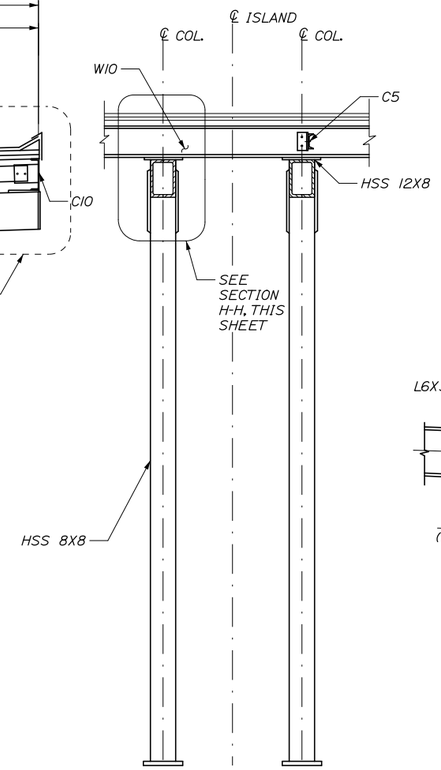

SECTION G-G
NTS

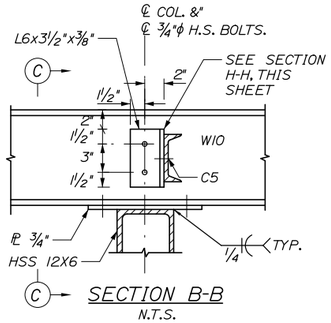

SECTION B-B
N.T.S.

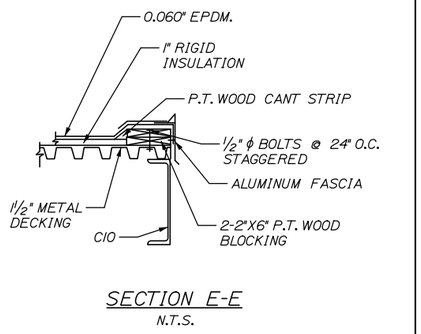

SECTION E-E
N.T.S.

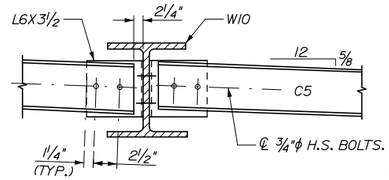

SECTION C-C
N.T.S.

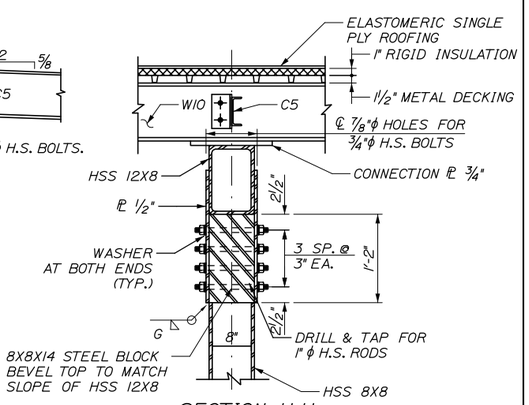

SECTION H-H
NTS

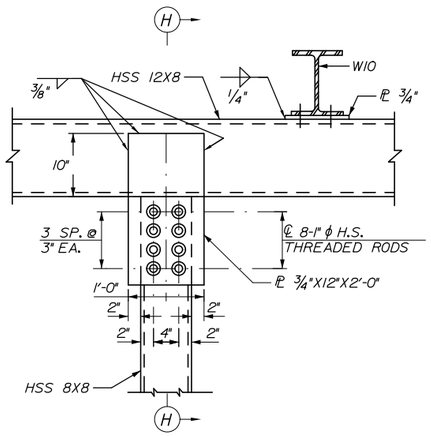

DETAIL B
1"=1'-0"

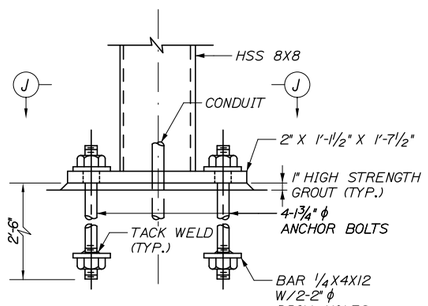

DETAIL C
1½"=1'-0"

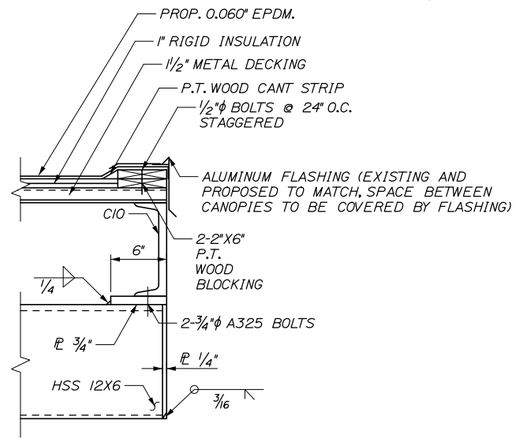

DETAIL D
N.T.S.

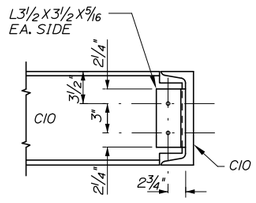

SECTION D-D
N.T.S.

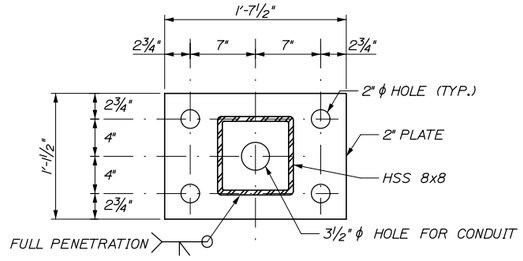

SECTION J-J
N.T.S.

Filename: 074_Exit32_Prop Canopy Sections & Dets.dgn

Scale: AS NOTED

No.	Revision	By	Date

Designed by: HNTB

CONSULTANT PROJECT MANAGER: R. Bruce Munger, P.E.

	By	Date		By	Date
Designed	AGP	08/15	Checked	FAC	08/15
Drawn	PTA	08/15	In Charge of	RAL	08/15

HNTB CORPORATION
340 County Road, Suite 6-C
Westbrook, ME 04092
TEL (207) 774-5155
FAX (207) 228-0909

MAINE TURNPIKE

THE GOLD STAR MEMORIAL HIGHWAY

MTA PROJECT MANAGER: William Yates

INTERCHANGES 32, 36, & 46 NB TOLL SYSTEM UPGRADES

INTERCHANGE 32

CANOPY SECTIONS AND DETAILS

SHEET NUMBER: S-12

CONTRACT:2015.12

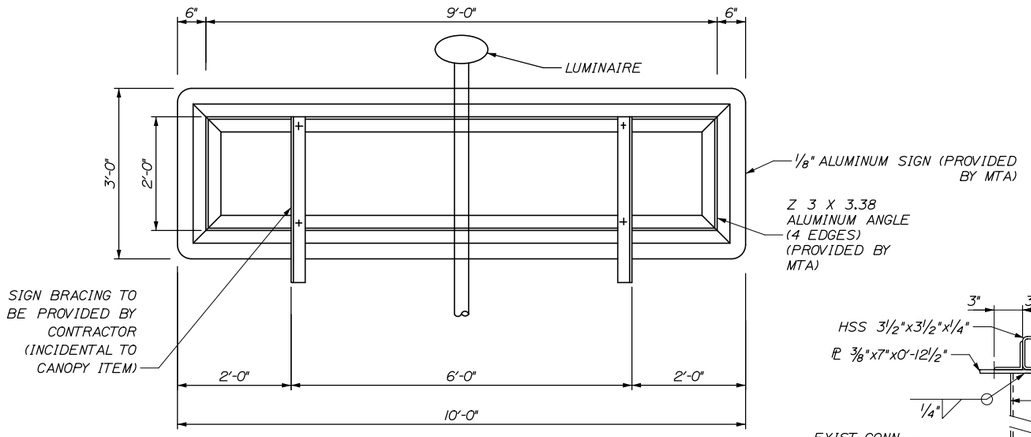

SIGN ELEVATION (REAR VIEW)
NTS

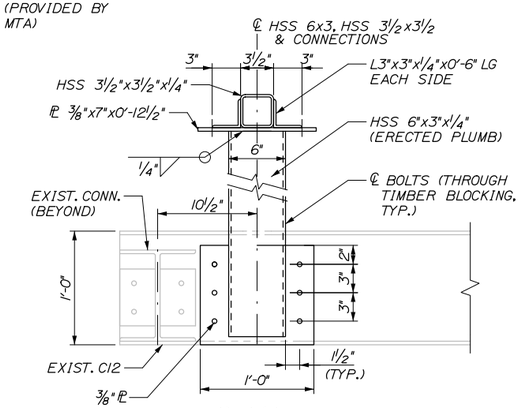

DETAIL I
(REPLACEMENT OF EXISTING CANOPY SIGN END SUPPORT STRUCTURE, SEE SHEET S-11 DETAIL C)
1½" = 1'-0"

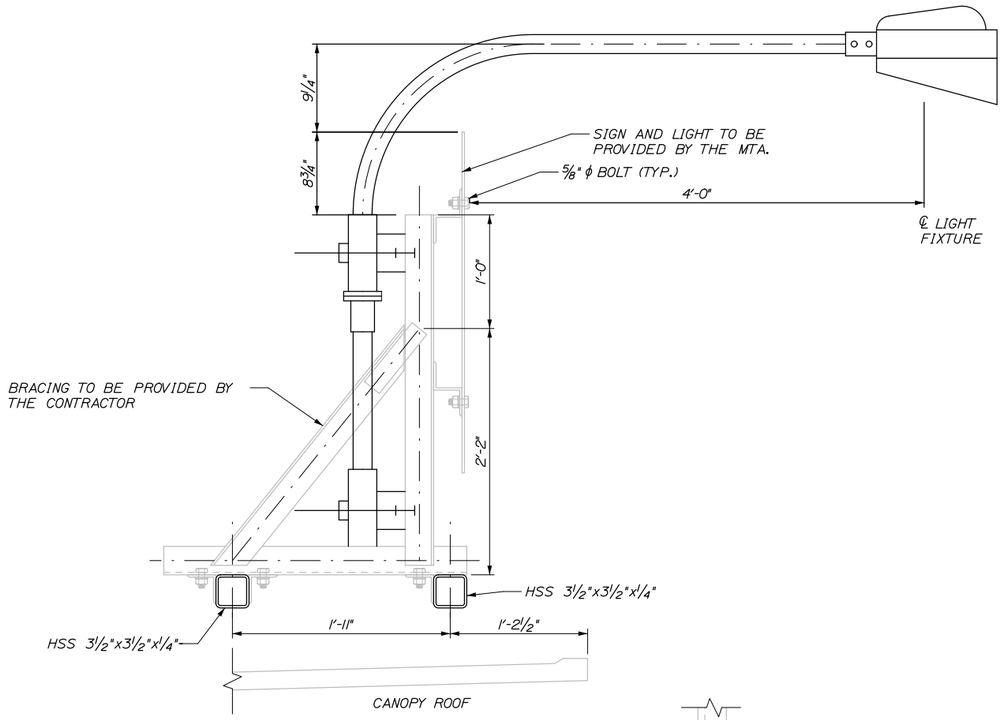

CANOPY MOUNTED SIGN
1½" = 1'-0"

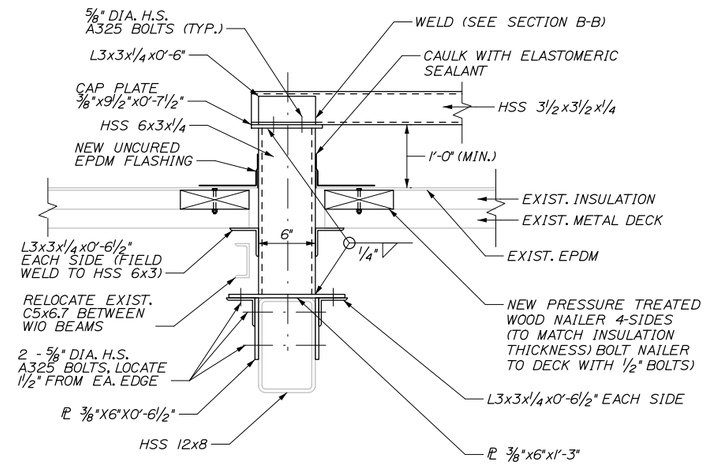

CANOPY MOUNTED INTERIOR SIGN POST
1½" = 1'-0"

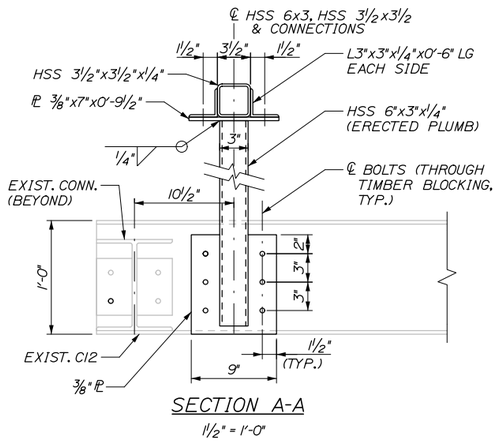

SECTION A-A
1½" = 1'-0"

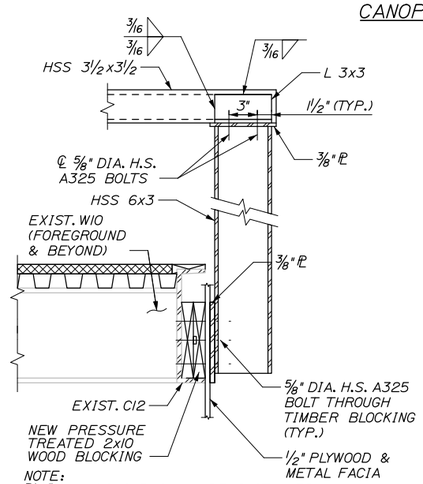

SECTION B-B
1½" = 1'-0"

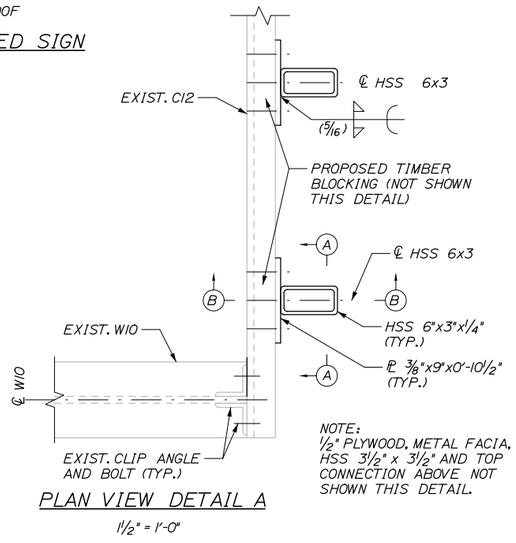

PLAN VIEW DETAIL A
1½" = 1'-0"

NOTES:
1. CONTRACTOR TO SUBMIT FLASHING DETAILS FOR REVIEW PRIOR TO CONSTRUCTION.

CANOPY MOUNTED EXTERIOR SIGN COLUMN

Date:9/5/2015

Filename: 075_Exit32_CanopySignDetails.dgn

Scale: AS NOTED

Designed by: HNTB

No.	Revision	By	Date

CONSULTANT PROJECT MANAGER: R. Bruce Munger, P.E.

	By	Date		By	Date
Designed	AGP	08/15	Checked	FAC	08/15
Drawn	PTA	08/15	In Charge of	RAL	08/15

HNTB CORPORATION
340 County Road, Suite 6-C
Westbrook, ME 04092
TEL (207) 774-5155
FAX (207) 228-0909

MAINE TURNPIKE

THE GOLD STAR MEMORIAL HIGHWAY

MTA PROJECT MANAGER: William Yates

INTERCHANGES 32, 36, & 46 NB
TOLL SYSTEM UPGRADES
INTERCHANGE 32
CANOPY SIGNS AND TYPICAL SECTIONS

SHEET NUMBER: S-13

CONTRACT:2015.12

Date:9/5/2015

NOTES:

1. STRUCTURAL STEEL FOR CANOPY FRAMING SHALL CONFORM TO THE FOLLOWING: ANGLES, PLATES AND CHANNELS - ASTM A36. HOLLOW STRUCTURAL SECTIONS (HSS) - ASTM A500 GRADE B.
2. ALL CONNECTIONS BETWEEN STEEL ELEMENTS SHALL BE MADE WITH EITHER ASTM A325 HIGH STRENGTH BOLTS OR WELD MATERIAL CONFORMING TO E70XX. MINIMUM BOLT SIZE SHALL BE 7/8"ϕ IN STANDARD HOLES UNLESS NOTED OTHERWISE. MINIMUM WELD SIZE SHALL BE 5/16" INCH UNLESS NOTED OTHERWISE.
3. PROPOSED CANOPY SHALL BE COMPLETE AND OPERATING BEFORE EXISTING CANOPY CAN BE RAISED. SEE SPECIAL PROVISION 107.4.7. LIMITATIONS OF OPERATIONS, FOR ADDITIONAL REQUIREMENTS.
4. ALL CANOPY COLUMNS SHALL BE CLEARED OF EXISTING UTILITY WIRE PRIOR TO STARTING CANOPY RAISING OPERATIONS.
5. THE EXISTING CANOPY SHALL MATCH THE FINISHED ELEVATION OF PROPOSED CANOPY. THE CONTRACTOR SHALL FIELD MEASURE THE EXISTING CANOPY TO DETERMINE THE REQUIRED LENGTH OF THE COLUMN INSERTS. SUPPORTING FIELD VERIFICATION DATA SHALL BE SUBMITTED WITH SHOP DRAWINGS.
6. HOLES IN DIAPHRAGM CONNECTION ANGLES SHALL BE SHOP DRILLED. HOLES IN C15x33.9 DIAPHRAGMS SHALL BE FIELD DRILLED.
7. EXISTING AND PROPOSED FASCIAS SHALL MATCH AND THE FASCIA SHALL BRIDGE THE GAP BETWEEN THE TWO CANOPIES.

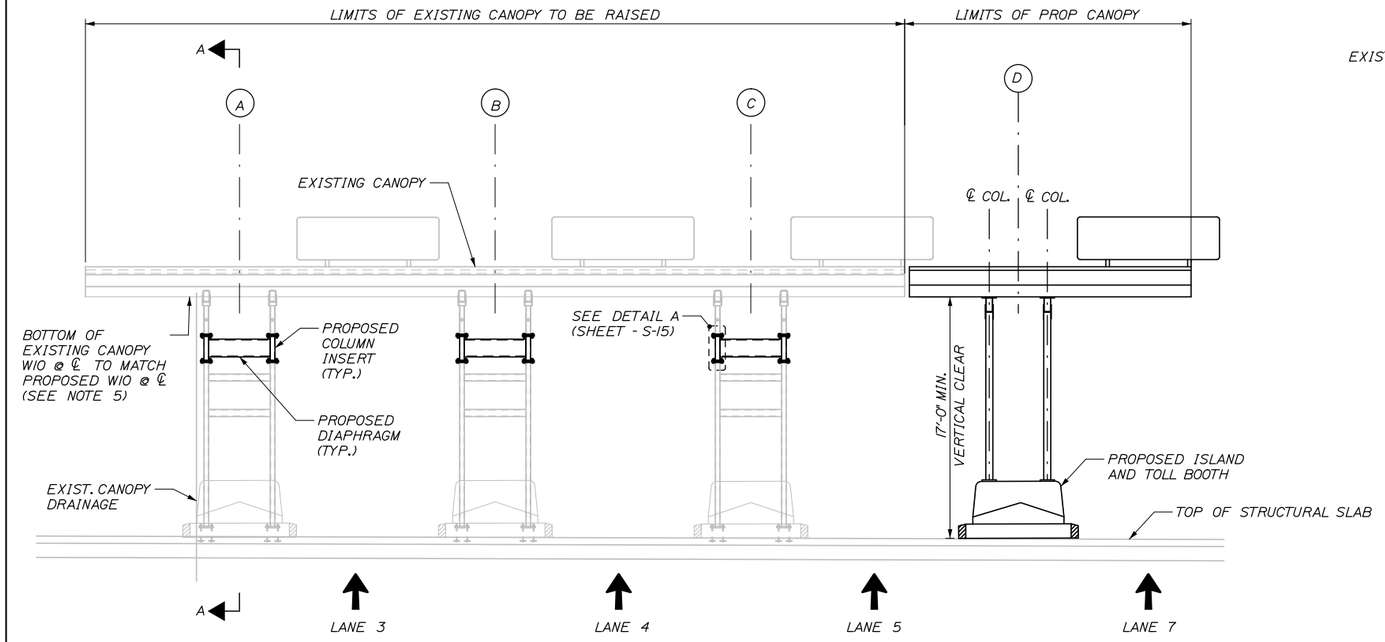

ELEVATION - TOLL PLAZA CANOPY
SCALE: 3/16" = 1'-0"

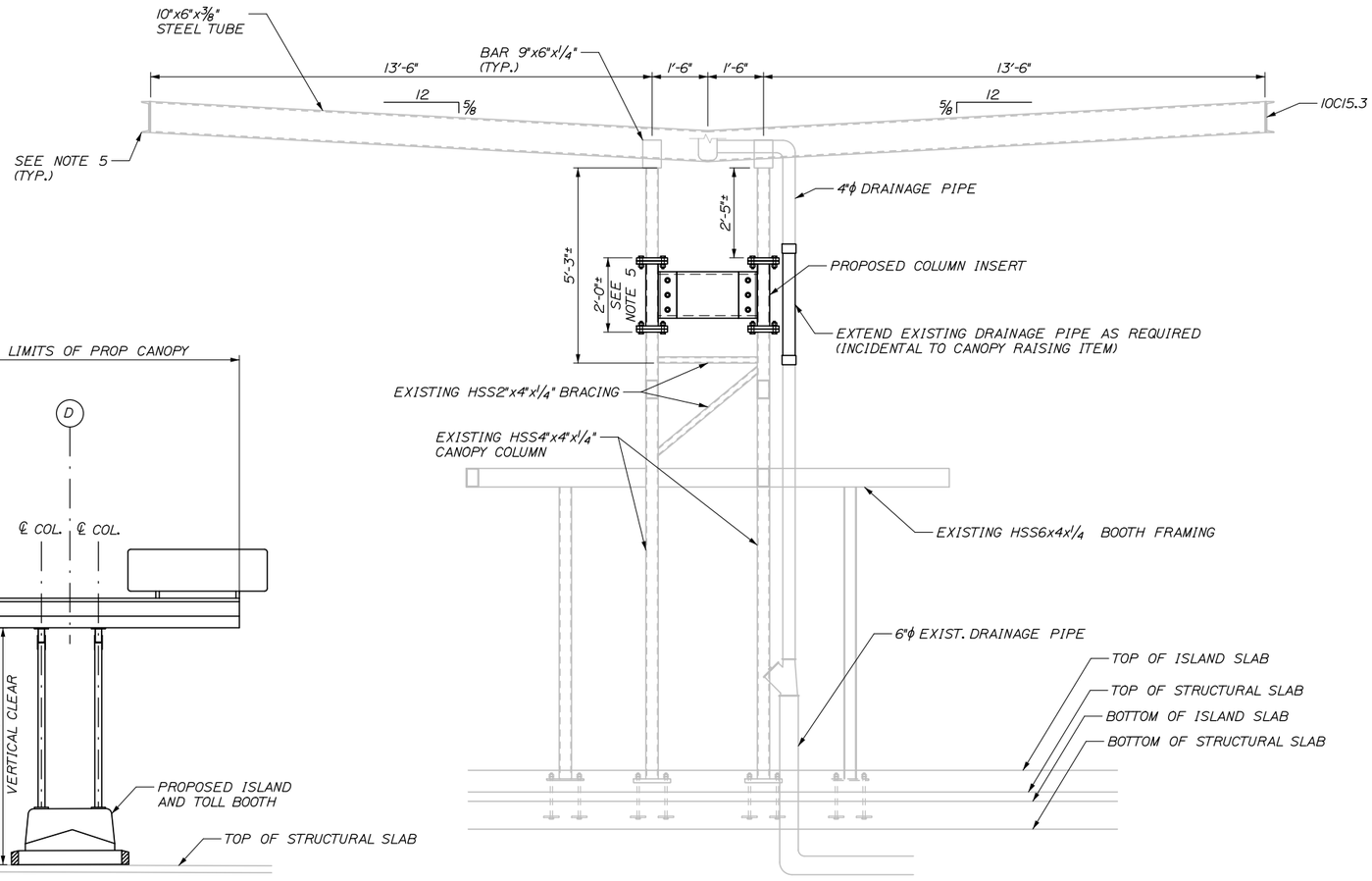

SECTION A-A
1/2" = 1'-0"

Filename: 076_Canopy Raising Elevation.dgn

Scale: AS NOTED	Designed by: HNTB	HNTB CORPORATION 340 County Road, Suite 6-C Westbrook, ME 04092 TEL (207) 774-5155 FAX (207) 228-0909	MAINE TURNPIKE	THE GOLD STAR MEMORIAL HIGHWAY	INTERCHANGES 32, 36, & 46 NB TOLL SYSTEM UPGRADES
	CONSULTANT PROJECT MANAGER: R. Bruce Munger, P.E.				INTERCHANGE 32 CANOPY RAISING ELEVATION
	Designed GLS 08/15 Checked TRC 08/15				SHEET NUMBER: S-14
	Drawn PEB 08/15 In Charge of RAL 08/15			MTA PROJECT MANAGER: William Yates	CONTRACT:2015.12 76 OF 118

No.	Revision	By	Date

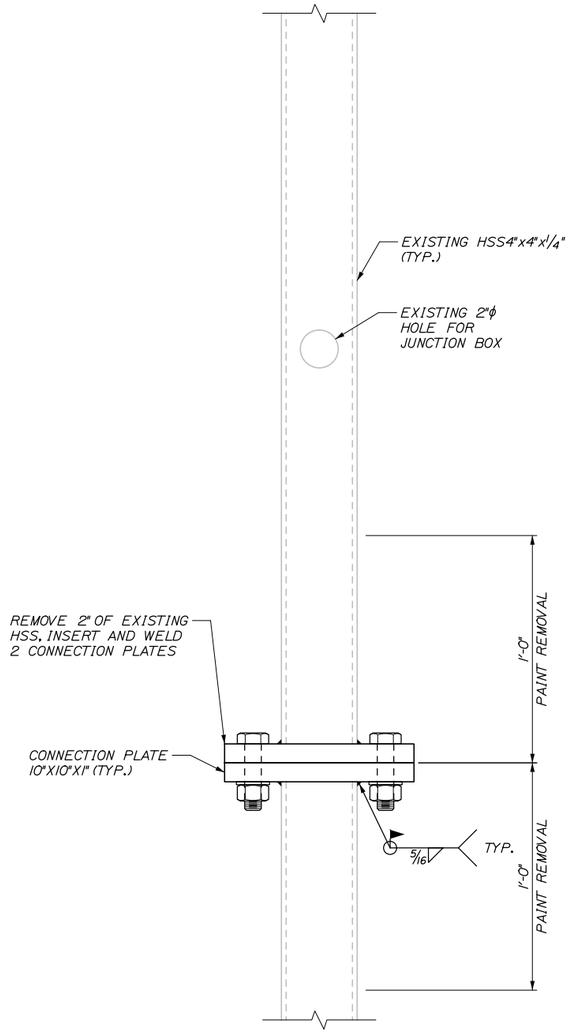

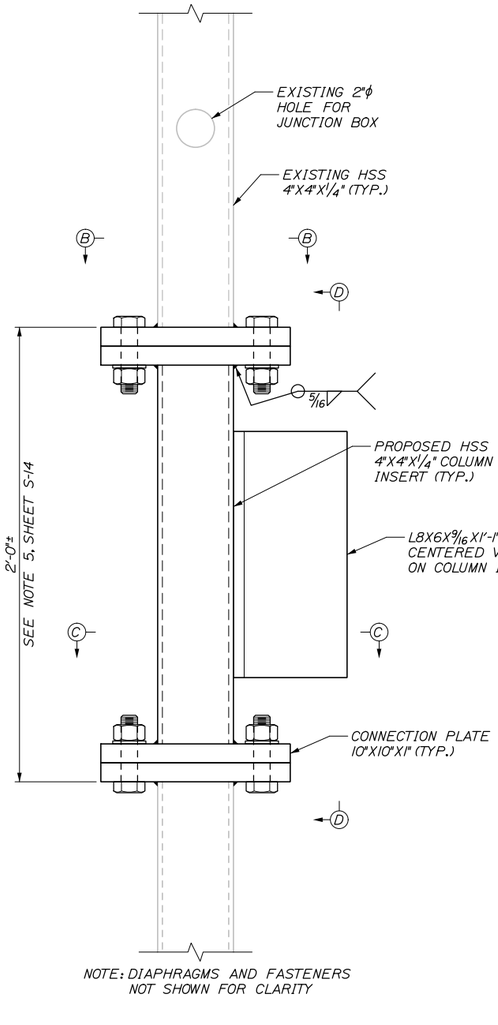

DETAIL A
3" = 1'-0"

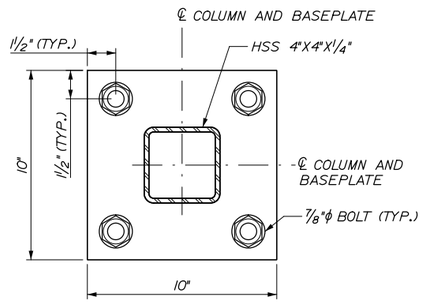

SECTION B-B
3" = 1'-0"

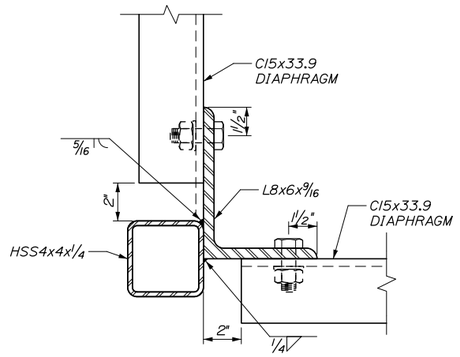

SECTION C-C
3" = 1'-0"

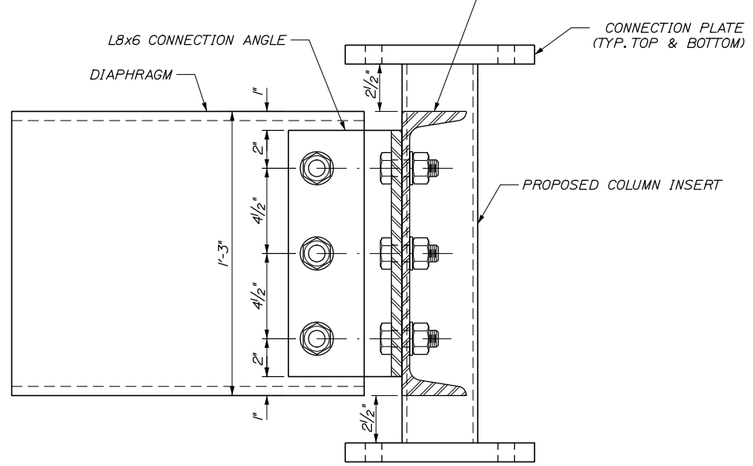

SECTION D-D
3" = 1'-0"

Date:9/5/2015

Filename: 077_Canopy Raising Details.dgn

Scale: AS NOTED	Designed by: HNTB	HNTB CORPORATION 340 County Road, Suite 6-C Westbrook, ME 04092 TEL (207) 774-5155 FAX (207) 228-0909	MAINE TURNPIKE	THE GOLD STAR MEMORIAL HIGHWAY	INTERCHANGES 32, 36, & 46 NB TOLL SYSTEM UPGRADES
					INTERCHANGE 32 CANOPY RAISING DETAILS
					SHEET NUMBER: S-15
				MTA PROJECT MANAGER: William Yates	CONTRACT:2015.12 77 OF 118

No.	Revision	By	Date

CONSULTANT PROJECT MANAGER: R. Bruce Munger, P.E.

	By	Date		By	Date
Designed	GLS	08/15	Checked	TRC	08/15
Drawn	PEB	08/15	In Charge of	RAL	08/15

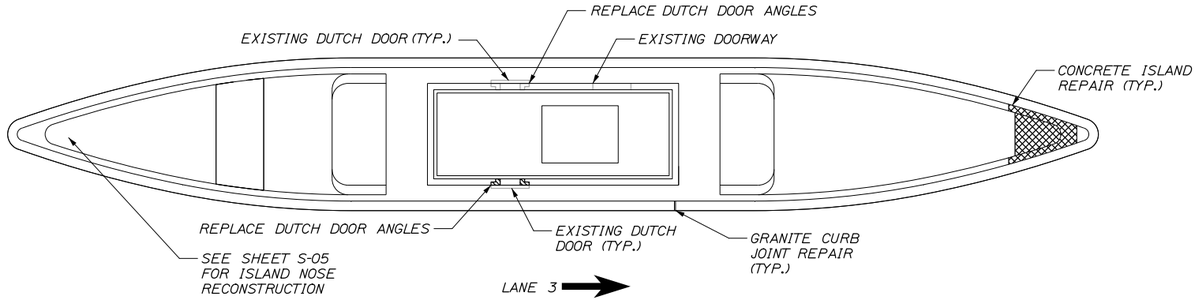

LANE 3 ISLAND - PLAN VIEW

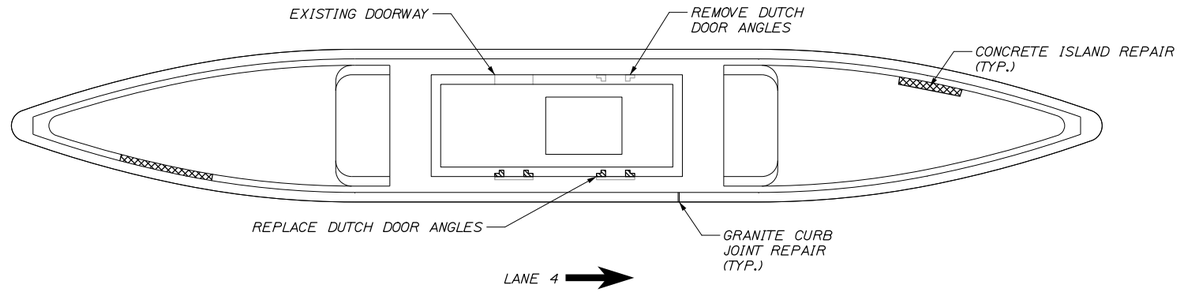

LANE 4 ISLAND - PLAN VIEW

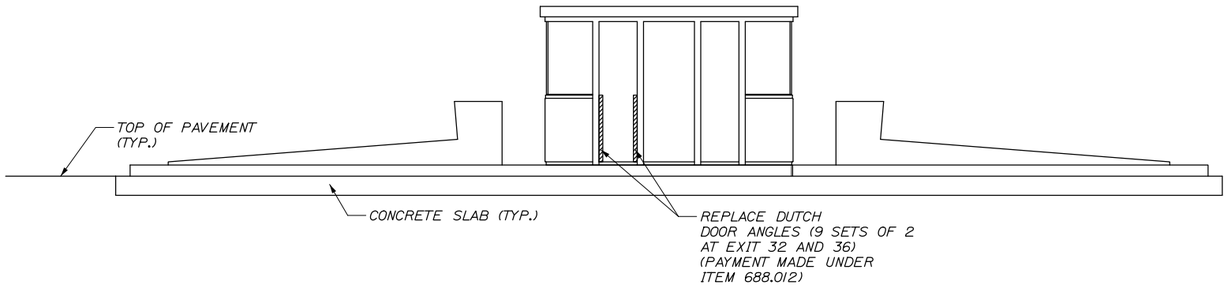

LANE 3 ISLAND - NORTH ELEVATION VIEW

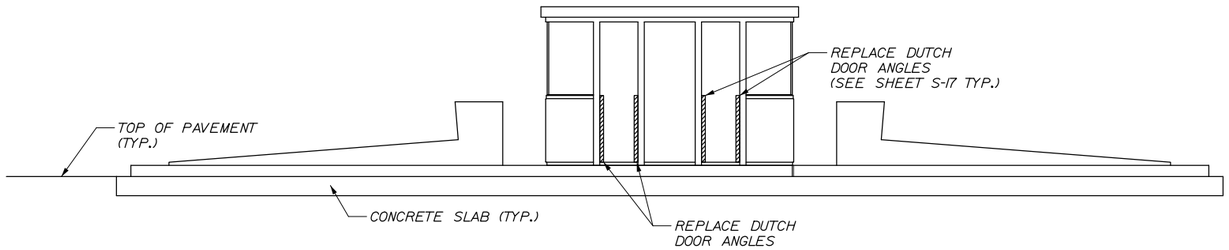

LANE 4 ISLAND - NORTH ELEVATION VIEW

NOTES:

1. THE CONTRACTOR SHALL FIELD VERIFY DUTCH DOOR DIMENSIONS PRIOR TO FABRICATING REPLACEMENT DUTCH DOOR ANGLES.

Date:9/5/2015

Filename: 078_Exit32_PlazaRepairs1.dgn

Scale: N.T.S.

No.	Revision	By	Date

Designed by: HNTB

CONSULTANT PROJECT MANAGER: R. Bruce Munger, P.E.

	By	Date		By	Date
Designed	JRD	08/15	Checked	RBM	08/15
Drawn	PMK	08/15	In Charge of	RAL	08/15

HNTB CORPORATION
340 County Road, Suite 6-C
Westbrook, ME 04092
TEL (207) 774-5155
FAX (207) 228-0909

MAINE TURNPIKE

THE GOLD STAR MEMORIAL HIGHWAY

MTA PROJECT MANAGER: William Yates

INTERCHANGES 32, 36, & 46 NB TOLL SYSTEM UPGRADES

INTERCHANGE 32 TOLL BOOTH AND ISLAND REPAIRS I

SHEET NUMBER: S-16

CONTRACT:2015.12

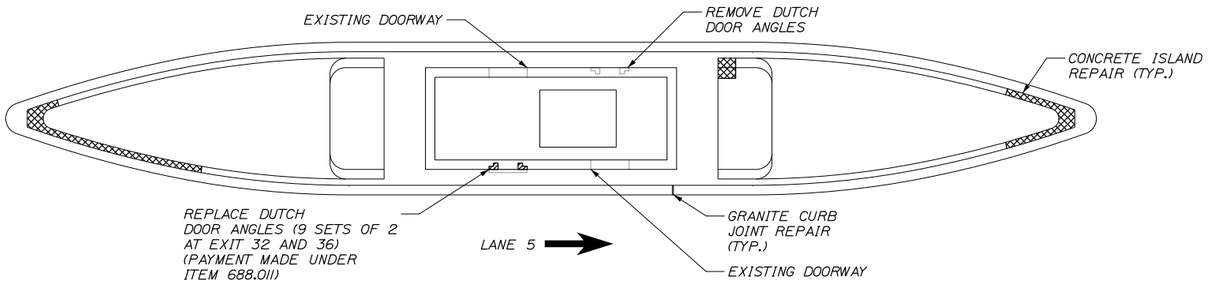

LANE 5 ISLAND - PLAN VIEW

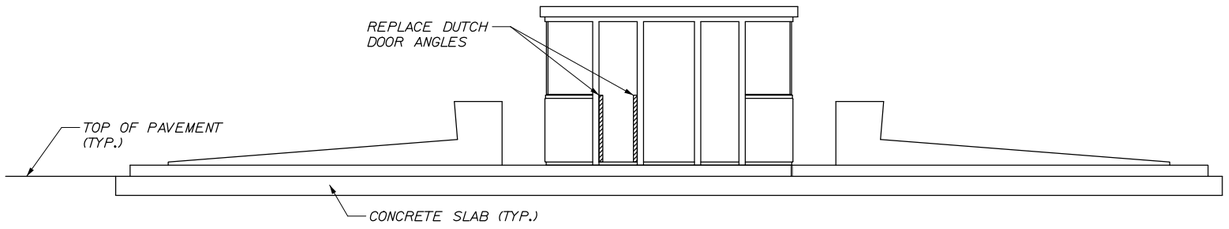

LANE 5 ISLAND - NORTH ELEVATION VIEW

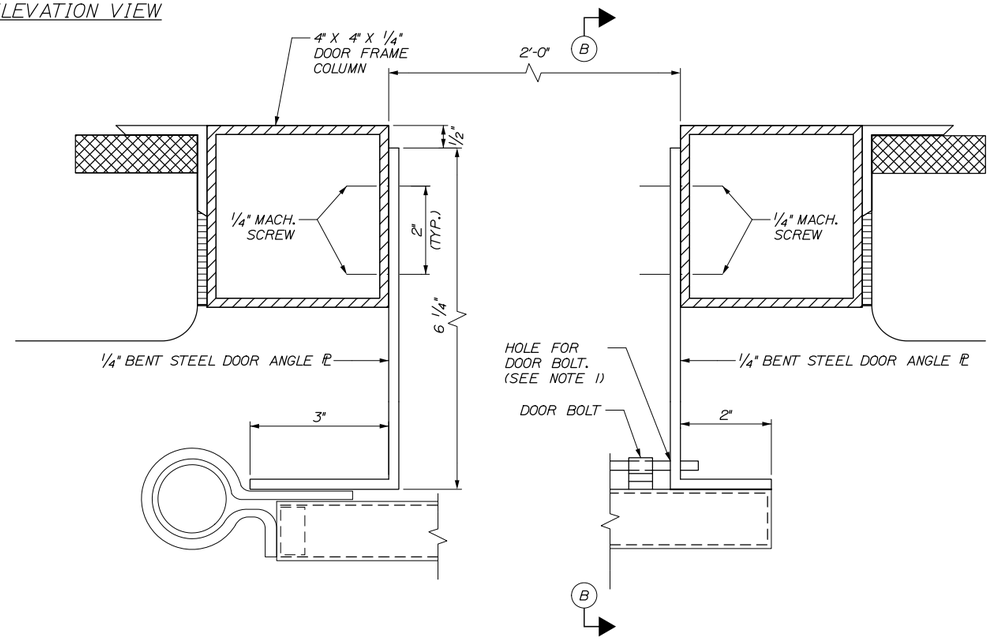

DUTCH DOOR ANGLE AND FRAME COLUMN DETAIL
N.T.S.

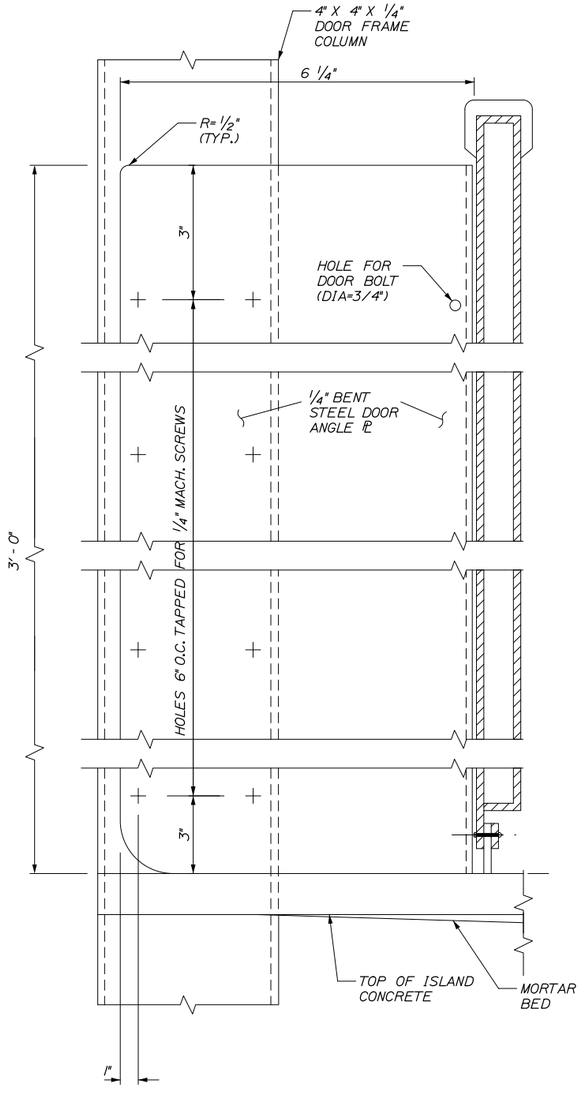

SECTION B-B
N.T.S.

NOTES:

1. THE 3/4" DIA. HOLE FOR THE DOOR BOLT SHALL BE DRILLED IN THE FIELD TO MATCH THE EXISTING DUTCH DOOR LATCH ASSEMBLY.

2. APPROXIMATE REPAIR QUANTITY:
CONCRETE ISLAND REPAIR - 36.40 SF
REMOVE ANGLES - 6 EA
REPLACE ANGLES - 8 EA
REMOVE DUTCH DOOR - 1 EA

3. ALL TOLL BOOTH REPAIRS INCLUDING BUT NOT LIMITED TO WINDOW SILL REPLACEMENT, REMOVAL AND RESETTING OF WINDOW GLAZING, MASONRY REPAIRS, AND STEEL REPAIRS WILL BE PAID FOR UNDER ITEM 688.012 - TOLL BOOTH REPAIR

Date:9/5/2015

Filename: 079_Exit32_PlazaRepairs2.dgn

Scale: N.T.S.

No.	Revision	By	Date

Designed by: HNTB

CONSULTANT PROJECT MANAGER: R. Bruce Munger, P.E.

	By	Date		By	Date
Designed	JRD	08/15	Checked	RBM	08/15
Drawn	PMK	08/15	In Charge of	RAL	08/15

HNTB CORPORATION
340 County Road, Suite 6-C
Westbrook, ME 04092
TEL (207) 774-5155
FAX (207) 228-0909

MAINE TURNPIKE

THE GOLD STAR MEMORIAL HIGHWAY

MTA PROJECT MANAGER: William Yates

INTERCHANGES 32, 36, & 46 NB TOLL SYSTEM UPGRADES

INTERCHANGE 32

TOLL BOOTH AND ISLAND REPAIRS 2

SHEET NUMBER: S-17

CONTRACT:2015.12

NOTES:

1. PREFORMED JOINT MATERIAL SHALL CONFORM TO THE CROSS SECTION OF THE PAVEMENT AND BE FURNISHED IN STRIPS EQUAL TO THE PAVEMENT WIDTH.
2. CONSTRUCT ALL TRANSVERSE JOINTS PERPENDICULAR TO THE CENTERLINE.
3. NO HOLE SHALL BE DRILLED CLOSER THAN 3" FROM THE EXISTING EDGE OF CONCRETE.
4. SELF LEVELING ELASTOMERIC SEALANT SHALL BE SIKA FLEX IA OR AN APPROVED EQUAL AND SHALL BEINCIDENTAL TO ITEM 502.262, STRUCTURAL CONCRETE ROADWAY SLAB ON GRADE.
5. SOFT CUT JOINTS SHALL BE CUT WITHIN 4 TO 6 HOURS OF INITIAL CONCRETE SET.
6. FOR SECTION A-A, B-B, C-C AND D-D, SEE SHEET S-19.
7. FOR SECTIONS E-E, F-F, G-G, AND H-H, SEE SHEET S-20.
8. FOR DETAILS 1, 2 AND 3, SEE SHEET S-20.
9. FOR REINFORCEMENT SCHEDULE OF STRUCTURAL SLAB AND BARRIERS, SEE SHEET S-21.
10. CLASS AAA DECK CONCRETE SHALL BE USED FOR CONCRETE INFILL. CONCRETE INFILL SHALL BE INCIDENTAL TO PAY ITEM 526.361 PROPOSED BARRIER.

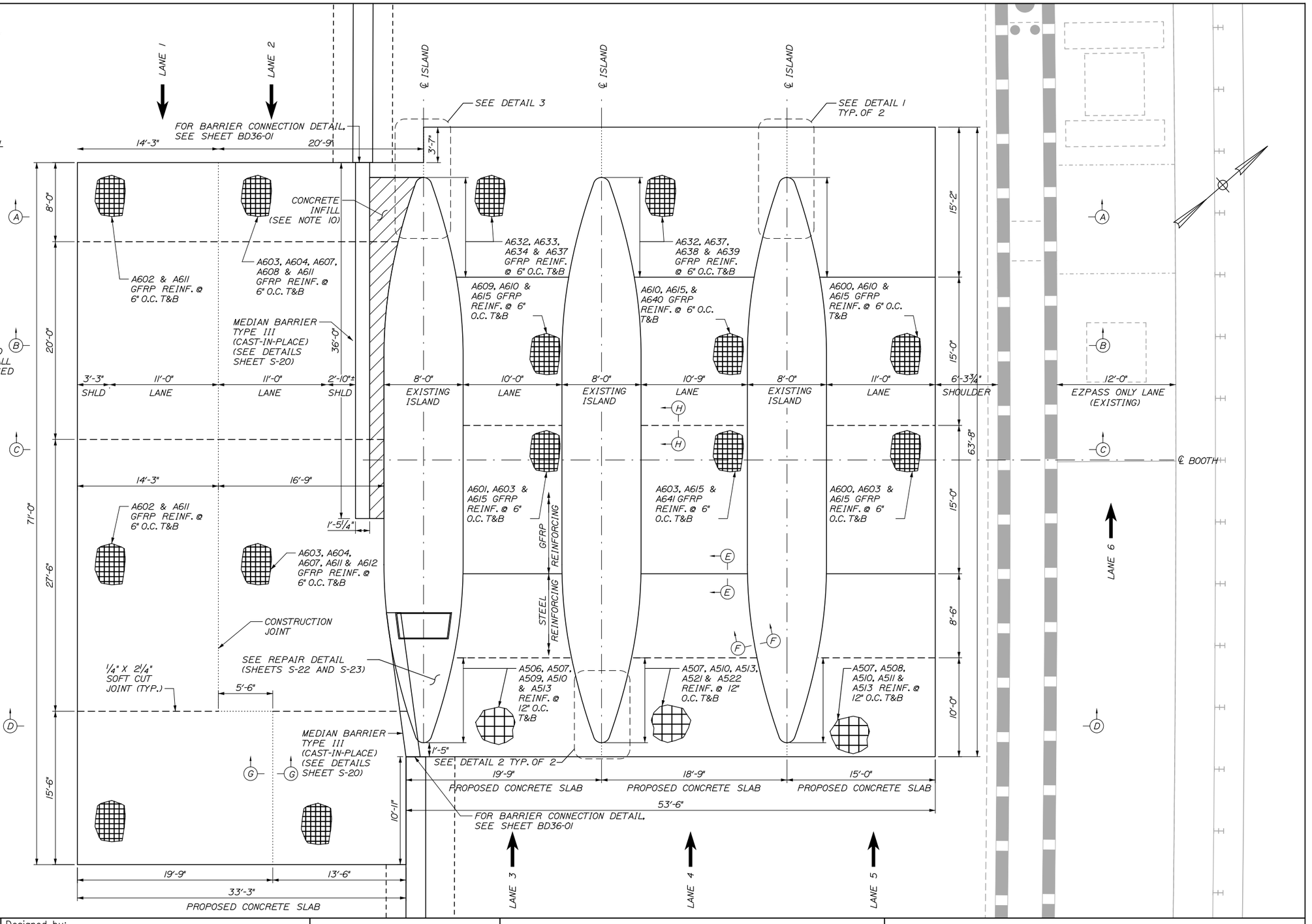

LEGEND

- CONTRACTION JOINT, SEE SECTION E-E
- CONSTRUCTION JOINT, SEE SECTION G-G
- SAWN JOINT, SEE SECTION H-H

Scale: 5 0 5 10

No.	Revision	By	Date

Designed by: HNTB

CONSULTANT PROJECT MANAGER: R. Bruce Munger, P.E.

	By	Date		By	Date
Designed	AGP	08/15	Checked	FAC	08/15
Drawn	PTA	08/15	In Charge of	RAL	08/15

HNTB CORPORATION
340 County Road, Suite 6-C
Westbrook, ME 04092
TEL (207) 774-5155
FAX (207) 228-0909

MAINE TURNPIKE

THE GOLD STAR MEMORIAL HIGHWAY

MTA PROJECT MANAGER: William Yates

INTERCHANGES 32, 36, & 46 NB TOLL SYSTEM UPGRADES

INTERCHANGE 36 STRUCTURAL SLAB PLAN

SHEET NUMBER: S-18

CONTRACT:2015.12

80 OF 118

Date:9/5/2015

Filename: 080_Exit36-PaveSlab.dgn

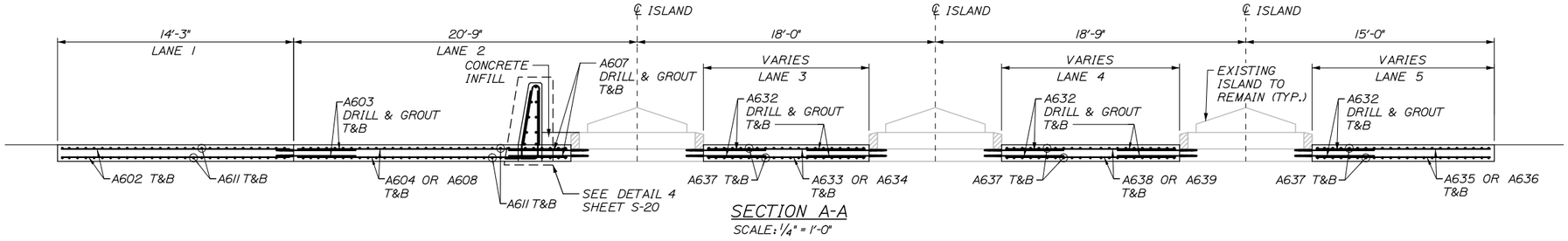

SECTION A-A

SCALE: 1/4" = 1'-0"

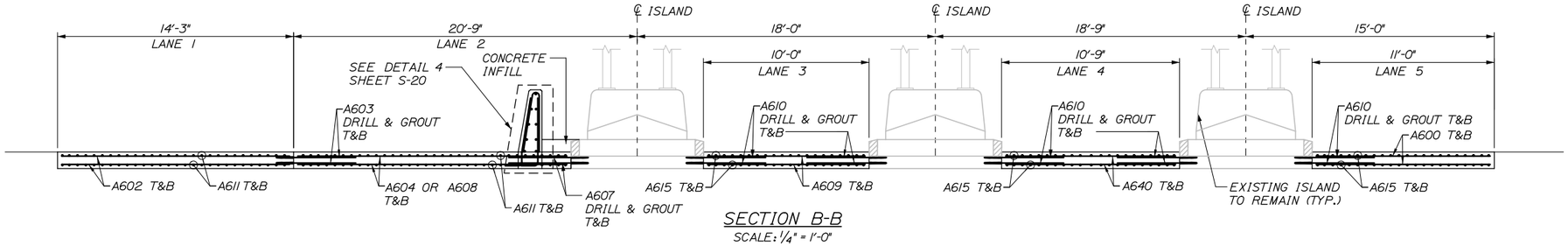

SECTION B-B

SCALE: 1/4" = 1'-0"

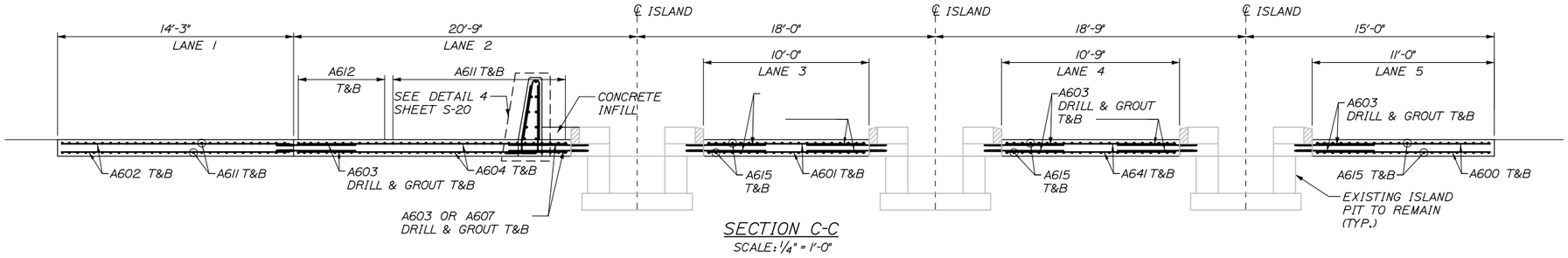

SECTION C-C

SCALE: 1/4" = 1'-0"

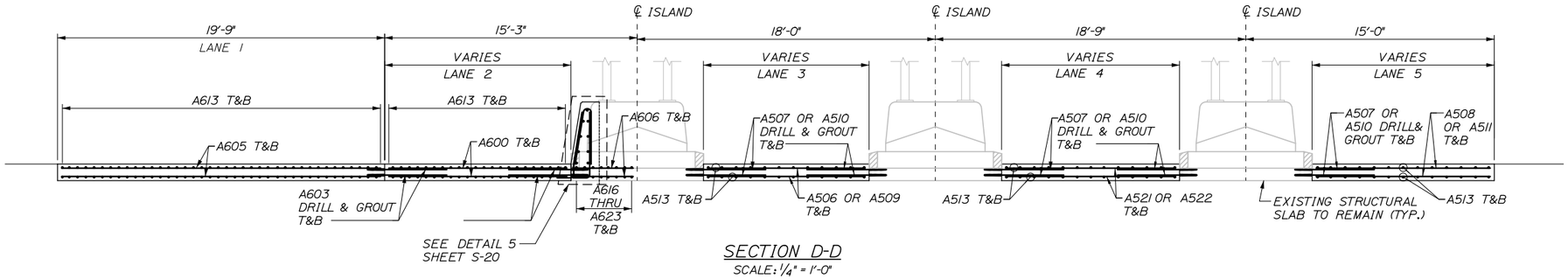

SECTION D-D

SCALE: 1/4" = 1'-0"

NOTES:

1. ALL STEEL REINFORCEMENT FOR STRUCTURAL SLAB SHALL BE EPOXY COATED.
2. FOR STRUCTURAL SLAB PLAN, SEE SHEET S-18.

Date:9/5/2015

Filename: 081_Exit36-PaveSlabSects.dgn

Scale: AS NOTED

No.	Revision	By	Date

Designed by: HNTB

CONSULTANT PROJECT MANAGER: R. Bruce Munger, P.E.

	By	Date		By	Date
Designed	AGP	08/15	Checked	FAC	08/15
Drawn	PTA	08/15	In Charge of	RAL	08/15

HNTB CORPORATION
340 County Road, Suite 6-C
Westbrook, ME 04092
TEL (207) 774-5155
FAX (207) 228-0909

MAINE TURNPIKE

THE GOLD STAR MEMORIAL HIGHWAY

MTA PROJECT MANAGER: William Yates

INTERCHANGES 32, 36, & 46 NB TOLL SYSTEM UPGRADES

INTERCHANGE 36 STRUCTURAL SLAB SECTIONS

SHEET NUMBER: S-19

CONTRACT:2015.12

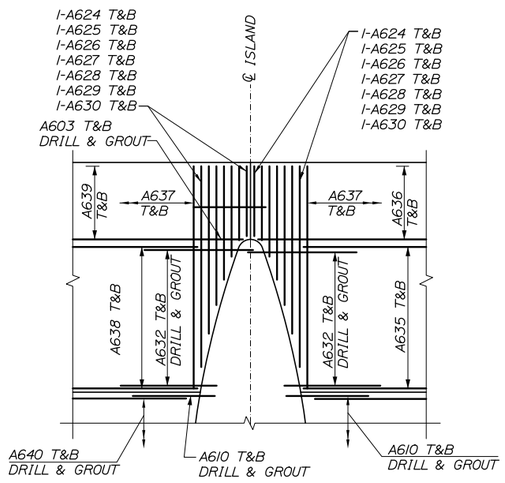

DETAIL 1
N.T.S.

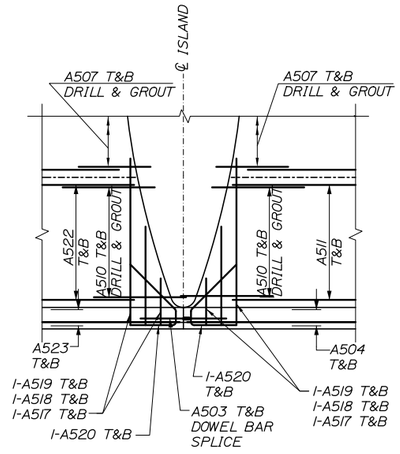

DETAIL 2
N.T.S.

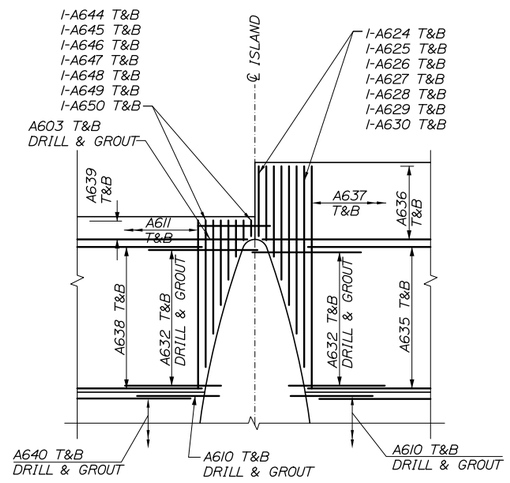

DETAIL 3
N.T.S.

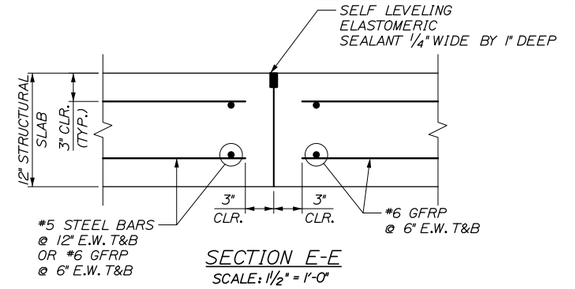

SECTION E-E
SCALE: 1 1/2" = 1'-0"

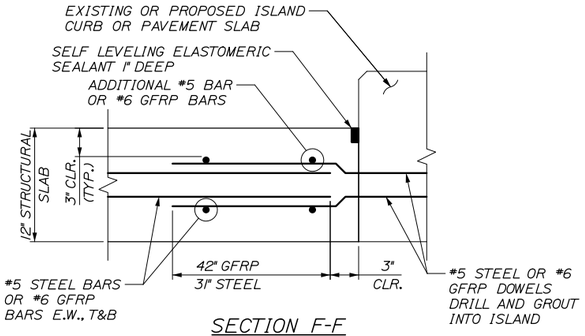

SECTION F-F
SCALE: 1 1/2" = 1'-0"

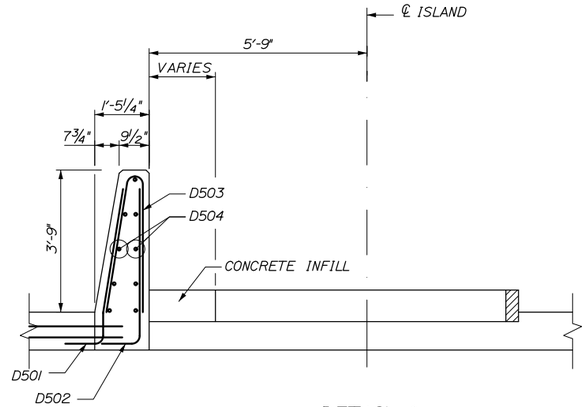

DETAIL 4
SCALE: 1/2" = 1'-0"

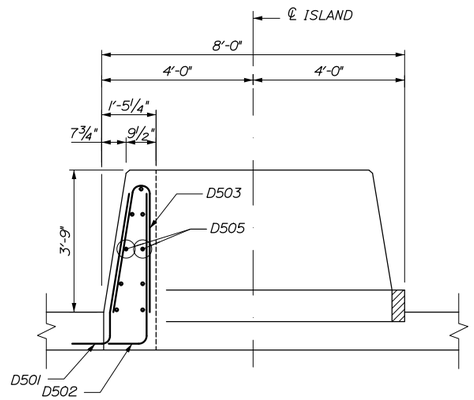

DETAIL 5
SCALE: 1/2" = 1'-0"

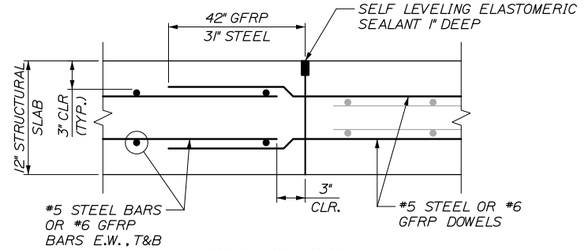

SECTION G-G
SCALE: 1 1/2" = 1'-0"

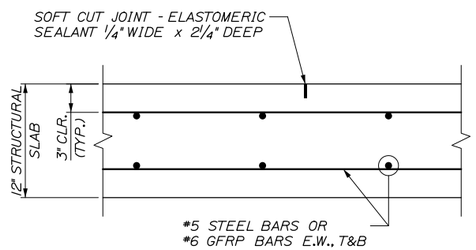

SECTION H-H
SCALE: 1 1/2" = 1'-0"

NOTES:

1. PREFORMED JOINT MATERIAL SHALL CONFORM TO THE CROSS SECTION OF THE PAVEMENT AND BE FURNISHED IN STRIPS EQUAL TO THE PAVEMENT WIDTH.
2. CONSTRUCT ALL TRANSVERSE JOINTS PERPENDICULAR TO THE CENTERLINE.
3. NO HOLE SHALL BE DRILLED CLOSER THAN 3" FROM THE EXISTING EDGE OF CONCRETE.
4. SELF LEVELING ELASTOMERIC SEALANT SHALL BE SIKA FLEX IA OR AN APPROVED EQUAL AND SHALL BE INCIDENTAL TO ITEM 502.262, STRUCTURAL CONCRETE ROADWAY SLAB ON GRADE.
5. SOFT CUT JOINTS SHALL BE CUT WITHIN 4 TO 6 HOURS OF INITIAL CONCRETE SET.

Date:9/5/2015

Filename: 082_Exit36-PaveSlabDetails.dgn

Scale: AS NOTED

No.	Revision	By	Date

Designed by: HNTB

CONSULTANT PROJECT MANAGER: R. Bruce Munger, P.E.

	By	Date		By	Date
Designed	AGP	08/15	Checked	FAC	08/15
Drawn	PTA	08/15	In Charge of	RAL	08/15

HNTB CORPORATION
340 County Road, Suite 6-C
Westbrook, ME 04092
TEL (207) 774-5155
FAX (207) 228-0909

MAINE TURNPIKE

THE GOLD STAR MEMORIAL HIGHWAY

MTA PROJECT MANAGER: William Yates

INTERCHANGES 32, 36, & 46 NB TOLL SYSTEM UPGRADES

INTERCHANGE 36 STRUCTURAL SLAB TYPICAL DETAILS

SHEET NUMBER: S-20

CONTRACT:2015.12

INTERCHANGE 36 - PAVEMENT SLAB

MARK	SIZE	NO.	LENGTH	TYPE	A	B	C	D	E	F	G	INCR.	REMARKS
PAVEMENT SLAB													
A502	5	4	17' - 6"	STR									STEEL Transverse
A503	5	8	5' - 8"	113	2'-10"	2'-10"							STEEL DOWEL BAR SPLICE
A504	5	4	14' - 6"	STR									STEEL Transverse
A506	5	18	9' - 6"	STR									STEEL Transverse
A507	5	90	4' - 9"	STR									STEEL DRILL AND GROUT
A508	5	18	10' - 6"	STR									STEEL Transverse
A509	5	18	11' - 6"	STR									STEEL Transverse
A510	5	90	6' - 1"	STR									STEEL DRILL AND GROUT
A511	5	18	11' - 5"	STR									STEEL Transverse
A513	5	66	18' - 0"	STR									STEEL Longitudinal
A517	5	10	3' - 3"	STR									STEEL Longitudinal
A518	5	10	6' - 6"	STR									STEEL Longitudinal
A519	5	10	11' - 0"	STR									STEEL Longitudinal
A520	5	10	8' - 3"	17G	3'-0"	1'-0"	4'-0"						STEEL Longitudinal
A521	5	18	10' - 3"	STR									STEEL Transverse
A522	5	18	12' - 3"	STR									STEEL Transverse
A523	5	4	18' - 3"	STR									STEEL Transverse
A600	6	122	10' - 6"	STR									GFRP Transverse
A601	6	90	9' - 6"	STR									GFRP Transverse
A602	6	224	13' - 9"	STR									GFRP Transverse
A603	6	828	4' - 9"	STR									GFRP Transverse DRILL & GROUT
A604	6	214	16' - 3"	STR									GFRP Transverse
A605	6	62	19' - 3"	STR									GFRP Transverse
A606	6	48	13' - 0"	STR									GFRP Transverse
A607	6	140	8' - 0"	STR									GFRP Transverse DRILL & GROUT
A608	6	8	20' - 3"	STR									GFRP Transverse
A609	6	30	9' - 6"	STR									GFRP Transverse
A610	6	150	5' - 6"	STR									GFRP Transverse DRILL & GROUT
A611	6	228	33' - 2"	STR									GFRP Longitudinal
A612	6	24	29' - 2"	STR									GFRP Longitudinal
A613	6	116	15' - 0"	STR									GFRP Longitudinal
A614	6	20	4' - 9"	STR									GFRP Longitudinal DRILL & GROUT
A615	6	128	29' - 6"	STR									GFRP Longitudinal
A616	6	2	12' - 0"	STR									GFRP Longitudinal
A617	6	2	12' - 3"	STR									GFRP Longitudinal
A618	6	2	13' - 3"	STR									GFRP Longitudinal
A619	6	2	14' - 9"	STR									GFRP Longitudinal
A620	6	2	16' - 6"	STR									GFRP Longitudinal
A621	6	2	18' - 4"	STR									GFRP Longitudinal
A622	6	2	20' - 6"	STR									GFRP Longitudinal
A623	6	2	23' - 4"	STR									GFRP Longitudinal
A624	6	10	4' - 8"	STR									GFRP Longitudinal
A625	6	10	5' - 0"	STR									GFRP Longitudinal
A626	6	10	6' - 0"	STR									GFRP Longitudinal
A627	6	10	7' - 6"	STR									GFRP Longitudinal
A628	6	10	9' - 3"	STR									GFRP Longitudinal
A629	6	10	11' - 2"	STR									GFRP Longitudinal
A630	6	10	13' - 4"	STR									GFRP Longitudinal
A631	6	2	16' - 2"	STR									GFRP Longitudinal
A632	6	190	7' - 2"	STR									GFRP Transverse DRILL & GROUT
A633	6	38	11' - 0"	STR									GFRP Transverse
A634	6	22	17' - 0"	STR									GFRP Transverse
A635	6	38	11' - 3"	STR									GFRP Transverse
A636	6	22	14' - 3"	STR									GFRP Transverse
A637	6	138	14' - 8"	STR									GFRP Longitudinal
A638	6	38	11' - 9"	STR									GFRP Transverse
A639	6	22	17' - 9"	STR									GFRP Transverse
A640	6	30	10' - 3"	STR									GFRP Transverse
A641	6	90	10' - 3"	STR									GFRP Transverse
A644	6	2	1' - 1"	STR									GFRP Longitudinal
A645	6	2	1' - 5"	STR									GFRP Longitudinal
A646	6	2	2' - 5"	STR									GFRP Longitudinal
A647	6	2	3' - 11"	STR									GFRP Longitudinal
A648	6	2	5' - 8"	STR									GFRP Longitudinal
A649	6	2	7' - 7"	STR									GFRP Longitudinal
A650	6	2	9' - 9"	STR									GFRP Longitudinal
ISLAND - BARRIER WALLS													
D501	5	36	5' - 5"	17E	1'-0"	10"	3'-6"	7 1/4"					STEEL Transverse
D502	5	15	4' - 6"	17		3'-6"	1'-0"	--					STEEL Transverse
D503	5	51	7' - 6"	17		3'-6"	5"	3'-6"					STEEL Transverse
D504	5	10	35' - 8"	STR									STEEL Longitudinal
D505	5	10	14' - 4"	STR									STEEL Longitudinal

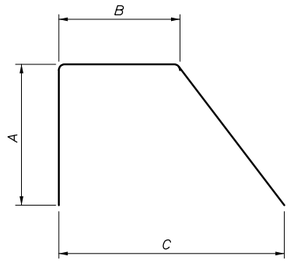

TYPE 17G

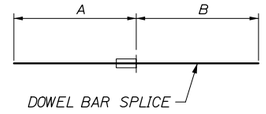

TYPE 113

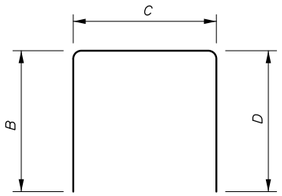

TYPE 17

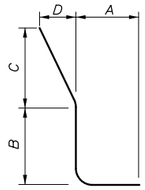

TYPE 17E

Date:9/5/2015

Filename: 083_Exit36-RebarSchedule.dgn

Scale: N.T.S.

No.	Revision	By	Date

Designed by: HNTB

CONSULTANT PROJECT MANAGER: R. Bruce Munger, P.E.

	By	Date		By	Date
Designed	AGP	08/15	Checked	FAC	08/15
Drawn	PTA	08/15	In Charge of	RAL	08/15

HNTB CORPORATION
340 County Road, Suite 6-C
Westbrook, ME 04092
TEL (207) 774-5155
FAX (207) 228-0909

MAINE TURNPIKE

THE GOLD STAR MEMORIAL HIGHWAY

MTA PROJECT MANAGER: William Yates

INTERCHANGES 32, 36, & 46 NB
TOLL SYSTEM UPGRADES
INTERCHANGE 36
STRUCTURAL SLAB REINFORCEMENT SCHEDULE

SHEET NUMBER: S-21

CONTRACT:2015.12

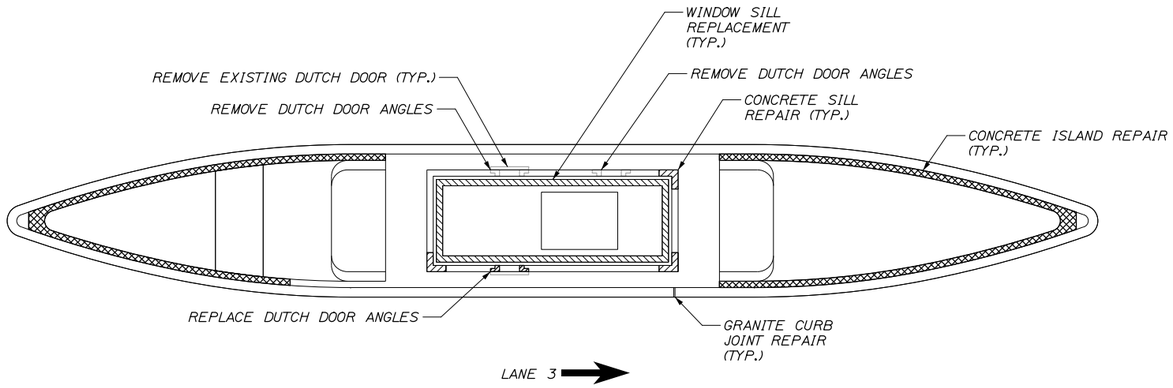

ISLAND A - PLAN VIEW

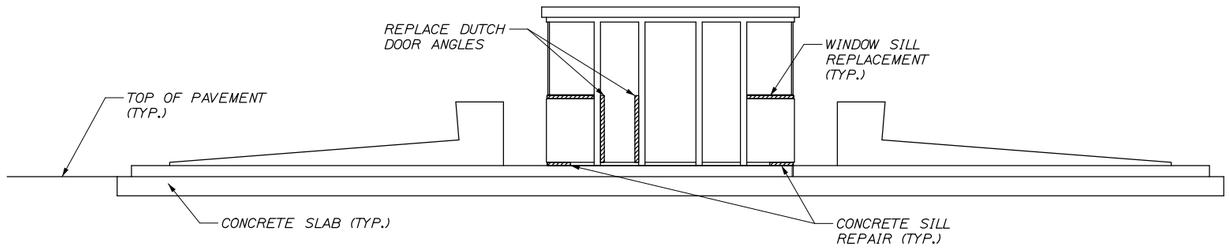

ISLAND A - NORTH ELEVATION VIEW

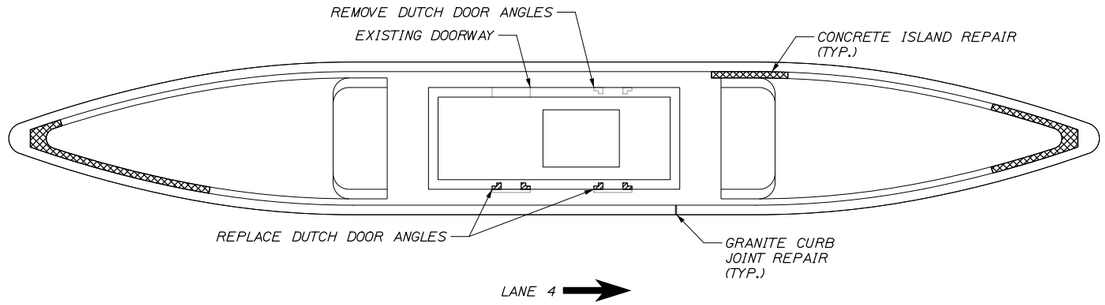

ISLAND B - PLAN VIEW

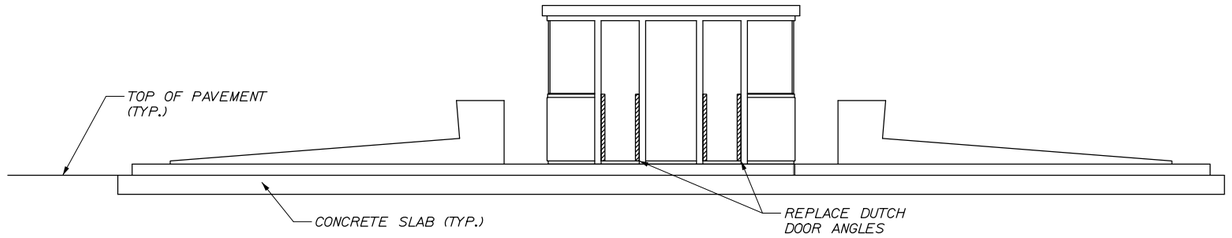

ISLAND B - NORTH ELEVATION VIEW

NOTES:

1. THE CONTRACTOR SHALL FIELD VERIFY DUTCH DOOR DIMENSIONS PRIOR TO FABRICATING REPLACEMENT DUTCH DOOR ANGLES.

2. RESEALING OF THE GLAZING AFTER THE WINDOW SILL REPLACEMENT SHALL BE INCIDENTAL TO THE REPAIR WORK. SEALANT SHALL BE APPROVED BY THE RESIDENT.

3. TOLL BOOTH FURNITURE/ EQUIPMENT REMOVAL AND RESET FOR THE WINDOW SILL REPLACEMENT SHALL BE INCIDENTAL TO THE REPAIR WORK.

Date:9/5/2015

Filename: 084_Exit36_PlazaRepairs1.dgn

Scale: N.T.S.

No.	Revision	By	Date

Designed by: HNTB

CONSULTANT PROJECT MANAGER: R. Bruce Munger, P.E.

	By	Date		By	Date
Designed	JRD	08/15	Checked	RBM	08/15
Drawn	PMK	08/15	In Charge of	RAL	08/15

HNTB CORPORATION
340 County Road, Suite 6-C
Westbrook, ME 04092
TEL (207) 774-5155
FAX (207) 228-0909

MAINE TURNPIKE

THE GOLD STAR MEMORIAL HIGHWAY

MTA PROJECT MANAGER: William Yates

INTERCHANGES 32, 36, & 46 NB
TOLL SYSTEM UPGRADES

INTERCHANGE 36
TOLL BOOTH AND ISLAND REPAIRS I

SHEET NUMBER: S-22

CONTRACT:2015.12

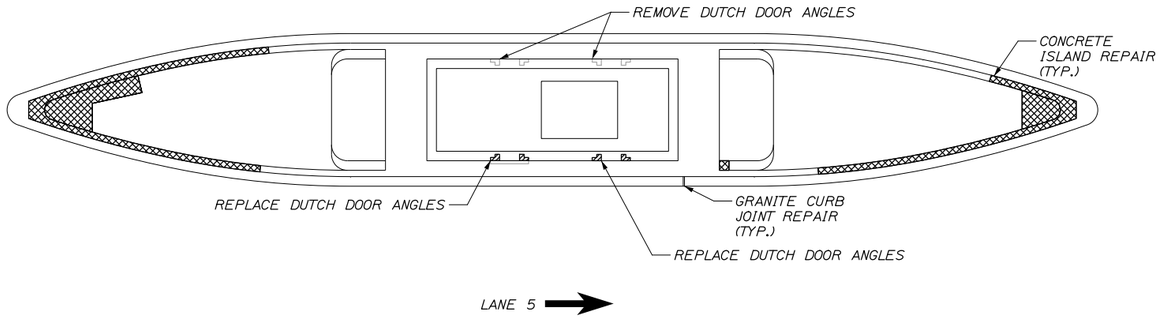

ISLAND C - PLAN VIEW

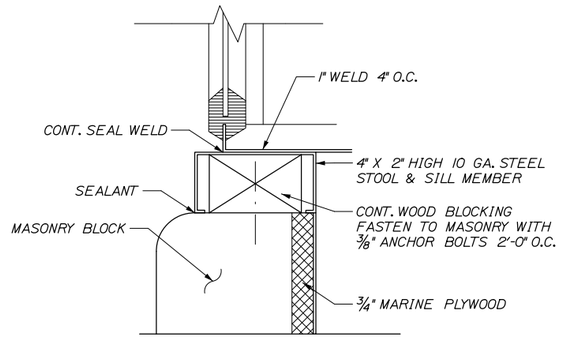

WINDOW SILL DETAIL
N.T.S.

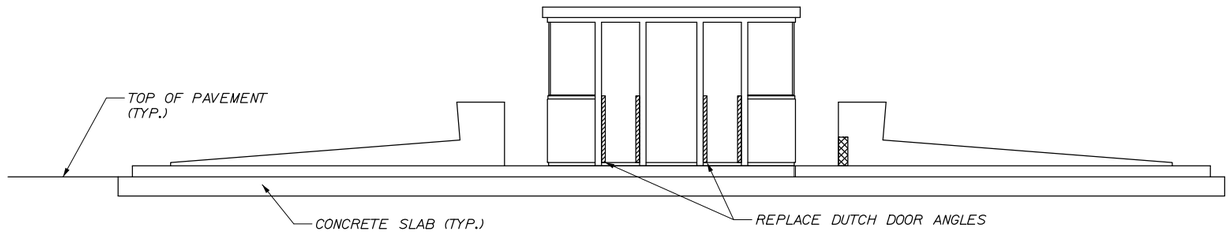

ISLAND C - NORTH ELEVATION VIEW

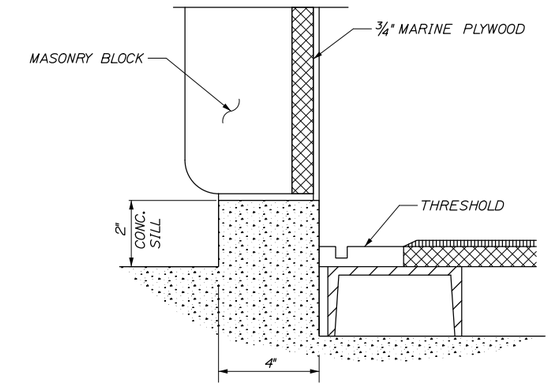

CONCRETE SILL DETAIL
N.T.S.

NOTES:

1. SEALANTS WILL BE INCIDENTAL

2. EQUIPMENT REMOVE/RESET FOR ALL REPAIR WORK WILL BE INCIDENTAL

3. APPROXIMATE REPAIR QUANTITY:
CONCRETE ISLAND REPAIR - 93 SF
WINDOW SILL REPLACEMENT - 17 LF
CONCRETE SILL REPAIR - 3 LF
REMOVE ANGLES - 10 EA
REPLACE ANGLES - 10 EA
REMOVE DUTCH DOORS - 1 EA

4. ALL TOLL BOOTH REPAIRS INCLUDING BUT NOT LIMITED TO WINDOW SILL REPLACEMENT, REMOVAL AND RESETTING OF WINDOW GLAZING, MASONRY REPAIRS, AND STEEL REPAIRS WILL BE PAID FOR UNDER ITEM 688.012 - TOLL BOOTH REPAIR

Date:9/5/2015

Filename: 085_Exit36_PlazaRepairs2.dgn

Scale: N.T.S.

Designed by: HNTB

No.	Revision	By	Date

CONSULTANT PROJECT MANAGER: R. Bruce Munger, P.E.

	By	Date		By	Date
Designed	JRD	08/15	Checked	RBM	08/15
Drawn	PMK	08/15	In Charge of	RAL	08/15

HNTB CORPORATION
340 County Road, Suite 6-C
Westbrook, ME 04092
TEL (207) 774-5155
FAX (207) 228-0909

MAINE TURNPIKE

THE GOLD STAR MEMORIAL HIGHWAY

MTA PROJECT MANAGER: William Yates

INTERCHANGES 32, 36, & 46 NB
TOLL SYSTEM UPGRADES

INTERCHANGE 36
TOLL BOOTH AND ISLAND REPAIRS 2

SHEET NUMBER: S-23

CONTRACT:2015.12

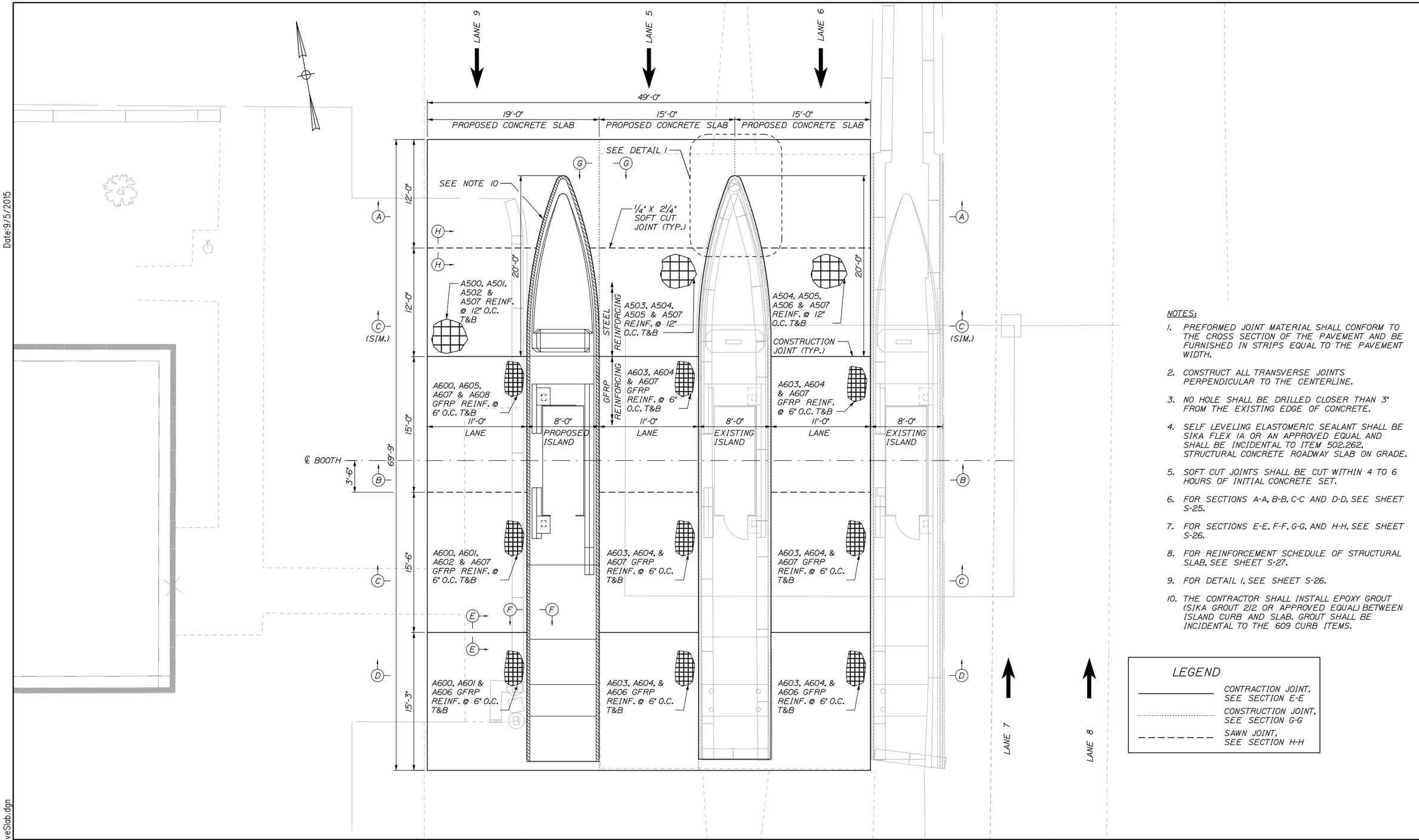

NOTES:

1. PREFORMED JOINT MATERIAL SHALL CONFORM TO THE CROSS SECTION OF THE PAVEMENT AND BE FURNISHED IN STRIPS EQUAL TO THE PAVEMENT WIDTH.
2. CONSTRUCT ALL TRANSVERSE JOINTS PERPENDICULAR TO THE CENTERLINE.
3. NO HOLE SHALL BE DRILLED CLOSER THAN 3" FROM THE EXISTING EDGE OF CONCRETE.
4. SELF LEVELING ELASTOMERIC SEALANT SHALL BE SIKA FLEX 1A OR AN APPROVED EQUAL AND SHALL BE INCIDENTAL TO ITEM 502.262, STRUCTURAL CONCRETE ROADWAY SLAB ON GRADE.
5. SOFT CUT JOINTS SHALL BE CUT WITHIN 4 TO 6 HOURS OF INITIAL CONCRETE SET.
6. FOR SECTIONS A-A, B-B, C-C AND D-D, SEE SHEET S-25.
7. FOR SECTIONS E-E, F-F, G-G, AND H-H, SEE SHEET S-26.
8. FOR REINFORCEMENT SCHEDULE OF STRUCTURAL SLAB, SEE SHEET S-27.
9. FOR DETAIL 1, SEE SHEET S-26.
10. THE CONTRACTOR SHALL INSTALL EPOXY GROUT (SIKA GROUT 212 OR APPROVED EQUAL) BETWEEN ISLAND CURB AND SLAB. GROUT SHALL BE INCIDENTAL TO THE 609 CURB ITEMS.

LEGEND

- CONTRACTION JOINT, SEE SECTION E-E
- CONSTRUCTION JOINT, SEE SECTION G-G
- SAWN JOINT, SEE SECTION H-H

Date:9/5/2015

Filename: 086_Exit46 NB-PaveSlab.dgn

Scale: 5 0 5 10

No.	Revision	By	Date

Designed by: HNTB

CONSULTANT PROJECT MANAGER: R. Bruce Munger, P.E.

	By	Date		By	Date
Designed	AGP	08/15	Checked	FAC	08/15
Drawn	KZT	08/15	In Charge of	RAL	08/15

HNTB CORPORATION
340 County Road, Suite 6-C
Westbrook, ME 04092
TEL (207) 774-5155
FAX (207) 228-0909

MAINE TURNPIKE

THE GOLD STAR MEMORIAL HIGHWAY

MTA PROJECT MANAGER: William Yates

INTERCHANGES 32, 36, & 46 NB TOLL SYSTEM UPGRADES

INTERCHANGE 46 NB STRUCTURAL SLAB PLAN

SHEET NUMBER: S-24

CONTRACT:2015.12

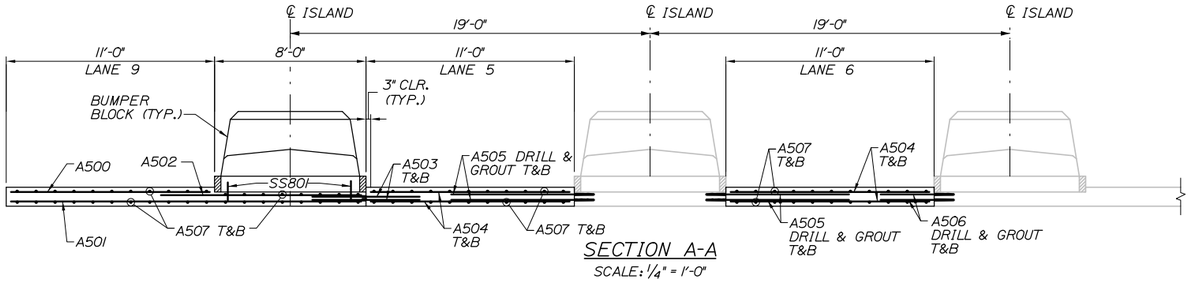

SECTION A-A

SCALE: 1/4" = 1'-0"

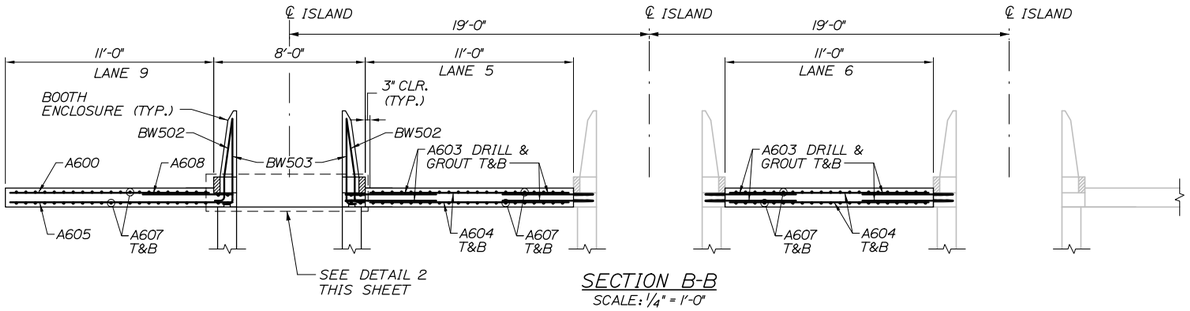

SECTION B-B

SCALE: 1/4" = 1'-0"

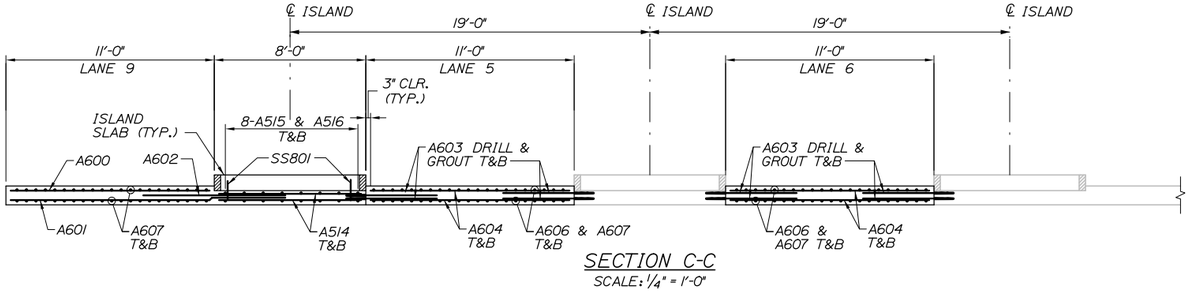

SECTION C-C

SCALE: 1/4" = 1'-0"

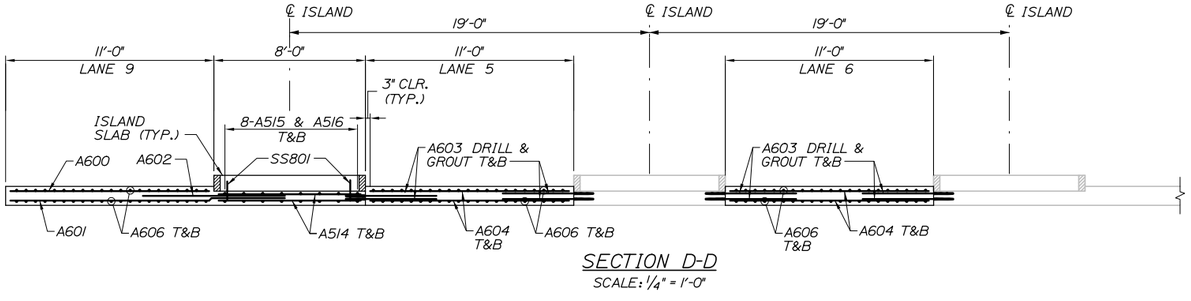

SECTION D-D

SCALE: 1/4" = 1'-0"

NOTES:

1. ALL STEEL REINFORCEMENT FOR STRUCTURAL SLAB SHALL BE EPOXY COATED.
2. FOR PAVEMENT SLAB PLAN, SEE SHEET S-24.
3. FOR ISLAND SLAB, BOOTH ENCLOSURE AND BUMPER BLOCK DETAILS, SEE SHEETS S-28, S-29, S-30, AND S-31.
4. FOR LOCATION OF SS801 BARS, SEE SHEET S-31.

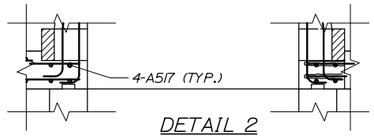

DETAIL 2

SCALE: 1/2" = 1'-0"

Date:9/5/2015

Filename: 087_Exit46 NB-PaveSlabSects.dgn

Scale: AS NOTED				Designed by: HNTB						HNTB CORPORATION 340 County Road, Suite 6-C Westbrook, ME 04092 TEL (207) 774-5155 FAX (207) 228-0909	MAINE TURNPIKE	THE GOLD STAR MEMORIAL HIGHWAY	INTERCHANGES 32, 36, & 46 NB TOLL SYSTEM UPGRADES INTERCHANGE 46 NB STRUCTURAL SLAB SECTIONS
No.	Revision	By	Date	CONSULTANT PROJECT MANAGER: R. Bruce Munger, P.E.								MTA PROJECT MANAGER: William Yates	SHEET NUMBER: S-25
					By	Date		By	Date				CONTRACT:2015.12 87 OF 118
				Designed	AGP	08/15	Checked	FAC	08/15				
				Drawn	KZT	08/15	In Charge of	RAL	08/15				

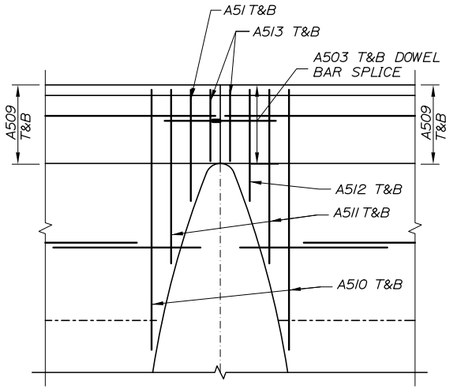

DETAIL I
NTS

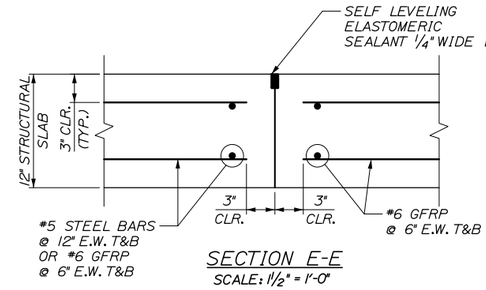

SECTION E-E
SCALE: 1 1/2" = 1'-0"

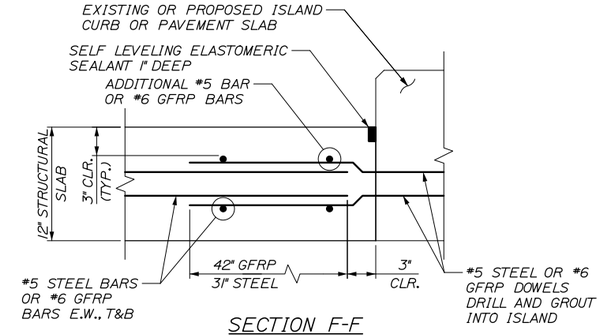

SECTION F-F
SCALE: 1 1/2" = 1'-0"

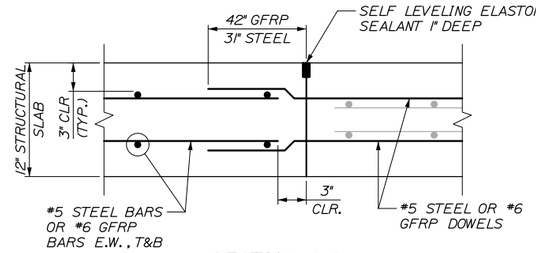

SECTION G-G
SCALE: 1 1/2" = 1'-0"

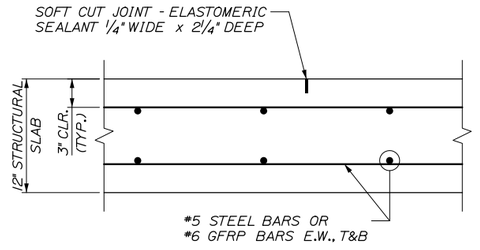

SECTION H-H
SCALE: 1 1/2" = 1'-0"

NOTES:

1. PREFORMED JOINT MATERIAL SHALL CONFORM TO THE CROSS SECTION OF THE PAVEMENT AND BE FURNISHED IN STRIPS EQUAL TO THE PAVEMENT WIDTH.
2. CONSTRUCT ALL TRANSVERSE JOINTS PERPENDICULAR TO THE CENTERLINE.
3. NO HOLE SHALL BE DRILLED CLOSER THAN 3" FROM THE EXISTING EDGE OF CONCRETE.
4. SELF LEVELING ELASTOMERIC SEALANT SHALL BE SIKA FLEX 1A OR AN APPROVED EQUAL AND SHALL BE INCIDENTAL TO ITEM 502.262, STRUCTURAL CONCRETE ROADWAY SLAB ON GRADE.
5. SOFT CUT JOINTS SHALL BE CUT WITHIN 4 TO 6 HOURS OF INITIAL CONCRETE SET.

Date:9/5/2015

Filename: 088_Exit46 NB_PaveSlabDetails.dgn

Scale: AS NOTED

No.	Revision	By	Date

Designed by: HNTB

CONSULTANT PROJECT MANAGER: R. Bruce Munger, P.E.

	By	Date		By	Date
Designed	AGP	08/15	Checked	FAC	08/15
Drawn	KZT	08/15	In Charge of	RAL	08/15

HNTB CORPORATION
340 County Road, Suite 6-C
Westbrook, ME 04092
TEL (207) 774-5155
FAX (207) 228-0909

MAINE TURNPIKE

THE GOLD STAR MEMORIAL HIGHWAY

MTA PROJECT MANAGER: William Yates

INTERCHANGES 32, 36, & 46 NB TOLL SYSTEM UPGRADES

INTERCHANGE 46 NB STRUCTURAL SLAB TYPICAL DETAILS

SHEET NUMBER: S-26

CONTRACT:2015.12

INTERCHANGE 46 NB - PAVEMENT SLAB

MARK	SIZE	NO.	LENGTH	TYPE	A	B	C	D	E	F	G	INCR.	REMARKS
PAVEMENT SLAB													
A500	5	20	10' - 6"	STR									STEEL Transverse
A501	5	24	18' - 6"	STR									STEEL Transverse
A502	5	20	10' - 8"	STR									STEEL Transverse
A503	5	56	5' - 8"	113	2'-10"	2'-10"							DOWEL BAR SPLICE
A504	5	80	10' - 6"	STR									STEEL Transverse
A505	5	80	7' - 6"	STR									DOWELL DRILL AND GROUT
A506	5	48	3' - 10"	STR									DOWELL DRILL AND GROUT
A507	5	88	23' - 6"	STR									STEEL Longitudinal
A508	5	8	18' - 6"	STR									STEEL Longitudinal
A509	5	16	14' - 6"	STR									STEEL Longitudinal
A510	5	4	13' - 3"	STR									STEEL Longitudinal
A511	5	4	8' - 10"	STR									STEEL Longitudinal
A512	5	4	5' - 7"	STR									STEEL Longitudinal
A513	5	4	3' - 7"	STR									STEEL Longitudinal
A514	5		-	STR									
A515	5	16	14' - 6"	STR									STEEL Longitudinal
A516	5	16	12' - 4"	STR									STEEL Longitudinal
A517	5	8	17' - 2"	STR									STEEL Longitudinal
SS801	8	98	1' - 0"	STR									SLAB DOWELL
SS802	8	7	2' - 2"	17		6"	1'-8"	--					SLAB DOWELL END OF RAMP
A600	6	90	10' - 6"	STR									GFRP Transverse
A601	6	65	14' - 3"	STR									GFRP Transverse
A602	6	65	7' - 6"	STR									GFRP Transverse
A603	6	728	4' - 9"	STR									GFRP Transverse DRILL & GROUT
A604	6	364	10' - 6"	STR									GFRP Transverse
A605	6	25	11' - 9"	STR									GFRP Transverse
A606	6	132	14' - 6"	STR									GFRP Longitudinal
A607	6	132	30' - 0"	STR									GFRP Longitudinal
A608	6	25	4' - 9"	STR									GFRP Transverse

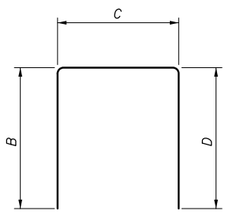

TYPE 17

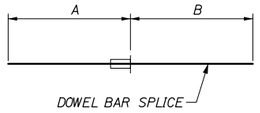

TYPE 113

Date:9/5/2015

Filename: 089_Exit46 NB-RebarSchedule.dgn

Scale: N.T.S.				Designed by: HNTB					
No.	Revision	By	Date	CONSULTANT PROJECT MANAGER: R. Bruce Munger, P.E.					
					By	Date		By	Date
				Designed	AGP	08/15	Checked	FAC	08/15
				Drawn	PTA	08/15	In Charge of	RAL	08/15

HNTB CORPORATION
340 County Road, Suite 6-C
Westbrook, ME 04092
TEL (207) 774-5155
FAX (207) 228-0909

MAINE TURNPIKE

THE GOLD STAR MEMORIAL HIGHWAY

MTA PROJECT MANAGER: William Yates

INTERCHANGES 32, 36, & 46 NB
TOLL SYSTEM UPGRADES
INTERCHANGE 46 NB
STRUCTURAL SLAB REINFORCEMENT SCHEDULE

SHEET NUMBER: S-27

CONTRACT:2015.12

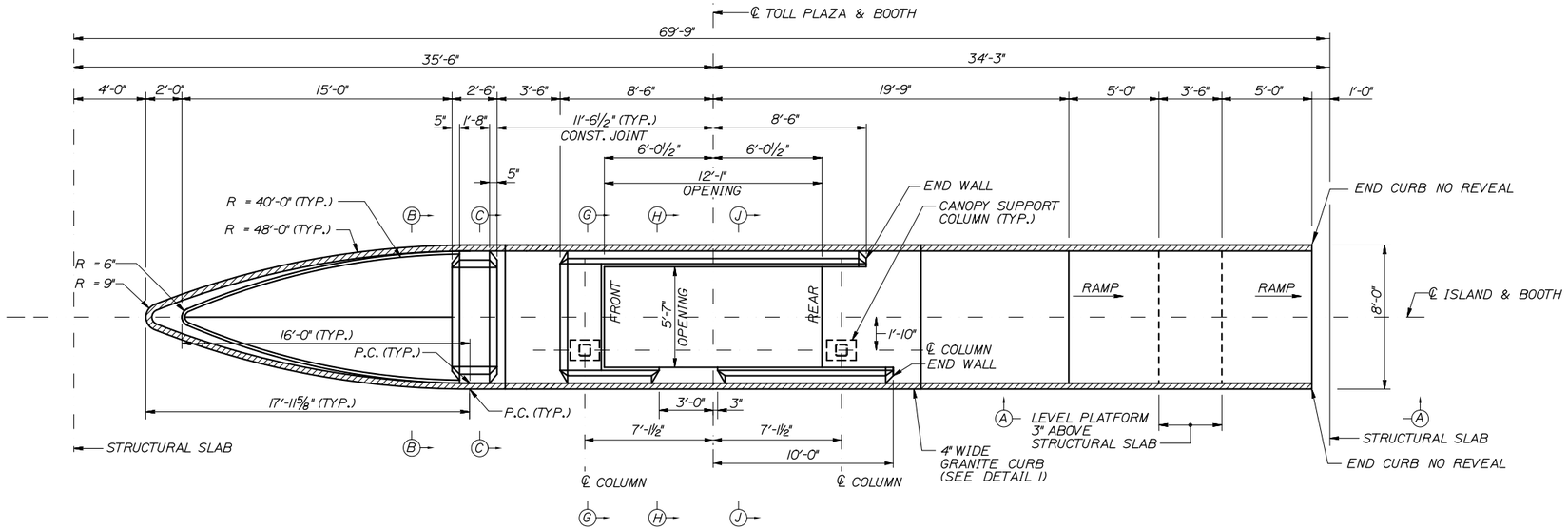

PLAN

SCALE: 1/4" = 1'-0"

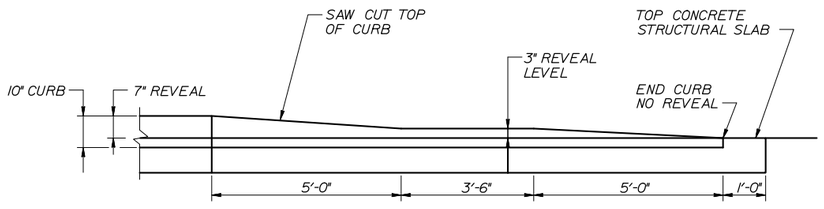

SECTION A-A

SCALE: ½" = 1'-0"

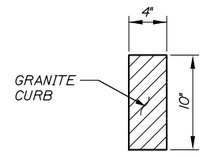

DETAIL 1

SCALE: ½" = 1'-0"

NOTES:

1. FOR REINFORCING DETAILS OF ISLAND, SEE SHEETS S-31 AND S-32.
2. FOR ISLAND CONCRETE PROFILES, SEE SHEET S-30.
3. FOR LOCATION OF ELECTRONIC TOLL COLLECTION EQUIPMENT, SEE ELECTRICAL PLANS.
4. FOR CONDUITS WITHIN ISLAND AND STRUCTURAL SLAB, SEE ELECTRICAL PLANS.
5. BARRIER WALL AND ISLAND SLABS TO HAVE ADDITIONAL CONSTRUCTION JOINTS OR CONTRACTION JOINTS SPACED EVERY 10 FOOT OR AS DIRECTED BY THE ENGINEER.
6. GRANITE CURBING JOINTS TO MATCH WITH ISLAND AND BARRIER JOINTS.
7. GRANITE CURBING ON ISLAND SHALL BE PAID UNDER ITEM 609.11.
8. FOR SECTIONS B-B, C-C, G-G, H-H AND J-J, SEE SHEET S-29.

Date:9/5/2015

Filename: 090_Exit46 NB_Prop Island Layout.dgn

Scale: AS NOTED

No.	Revision	By	Date

Designed by: HNTB

CONSULTANT PROJECT MANAGER: R. Bruce Munger, P.E.

	By	Date		By	Date
Designed	AGP	08/15	Checked	FAC	08/15
Drawn	KZT	08/15	In Charge of	RAL	08/15

HNTB CORPORATION
340 County Road, Suite 6-C
Westbrook, ME 04092
TEL (207) 774-5155
FAX (207) 228-0909

MAINE TURNPIKE

THE GOLD STAR MEMORIAL HIGHWAY

MTA PROJECT MANAGER: William Yates

INTERCHANGES 32, 36, & 46 NB TOLL SYSTEM UPGRADES

INTERCHANGE 46 NB TOLL ISLAND PLAN

SHEET NUMBER: S-28

CONTRACT:2015.12

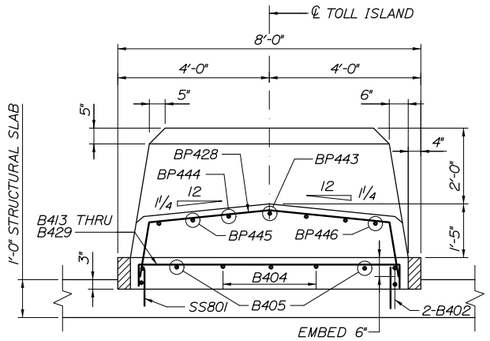

SECTION B-B
SCALE: ½" = 1'-0"

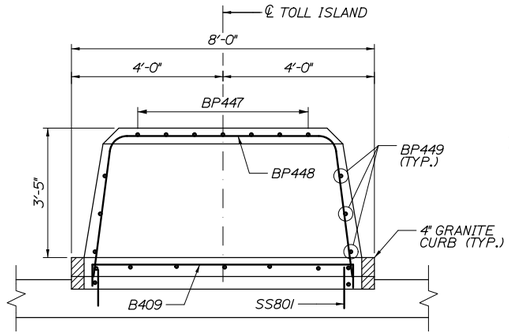

SECTION C-C
SCALE: ½" = 1'-0"

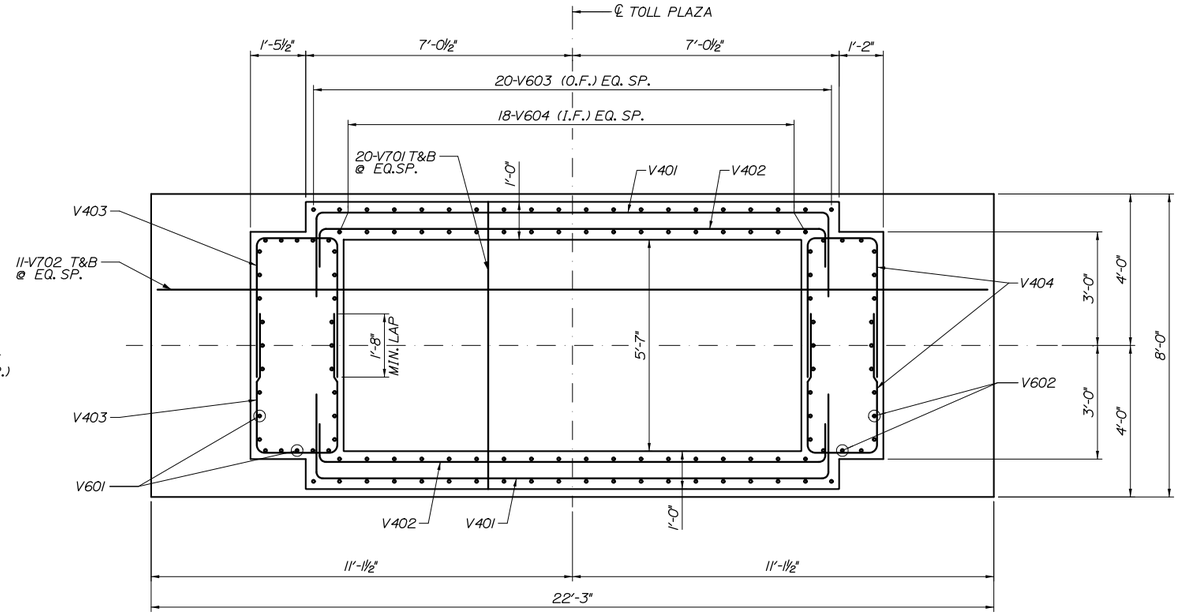

SECTION D-D
SCALE: ½" = 1'-0"

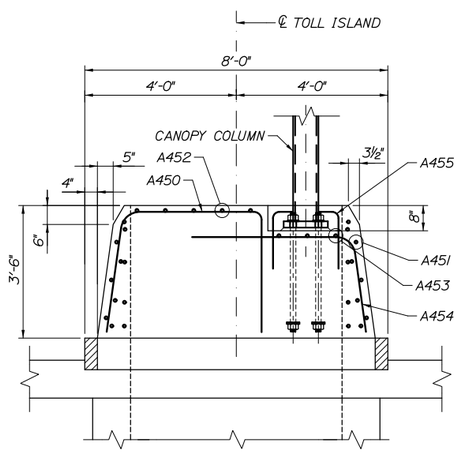

SECTION G-G
SCALE: ½" = 1'-0"

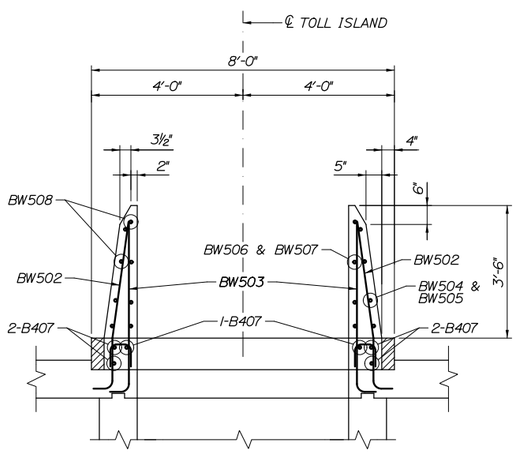

SECTION H-H
SCALE: ½" = 1'-0"

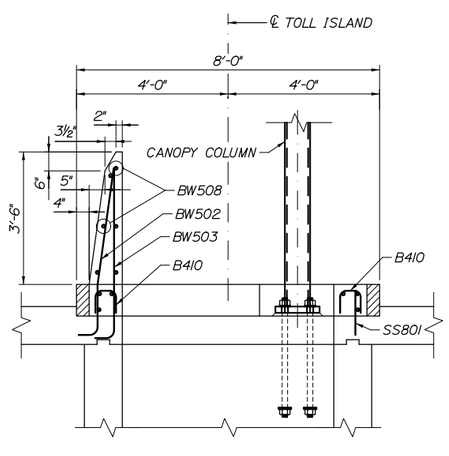

SECTION J-J
SCALE: ½" = 1'-0"

Filename: 091_Exit46 NB_Prop Island Sects.dgn

Scale: AS NOTED

No.	Revision	By	Date

Designed by: HNTB

CONSULTANT PROJECT MANAGER: R. Bruce Munger, P.E.

	By	Date		By	Date
Designed	AGP	08/15	Checked	FAC	08/15
Drawn	KZT	08/15	In Charge of	RAL	08/15

HNTB CORPORATION
340 County Road, Suite 6-C
Westbrook, ME 04092
TEL (207) 774-5155
FAX (207) 228-0909

MAINE TURNPIKE

THE GOLD STAR MEMORIAL HIGHWAY

MTA PROJECT MANAGER: William Yates

INTERCHANGES 32, 36, & 46 NB TOLL SYSTEM UPGRADES

INTERCHANGE 46 NB TOLL ISLAND SECTIONS

SHEET NUMBER: S-29

CONTRACT:2015.12

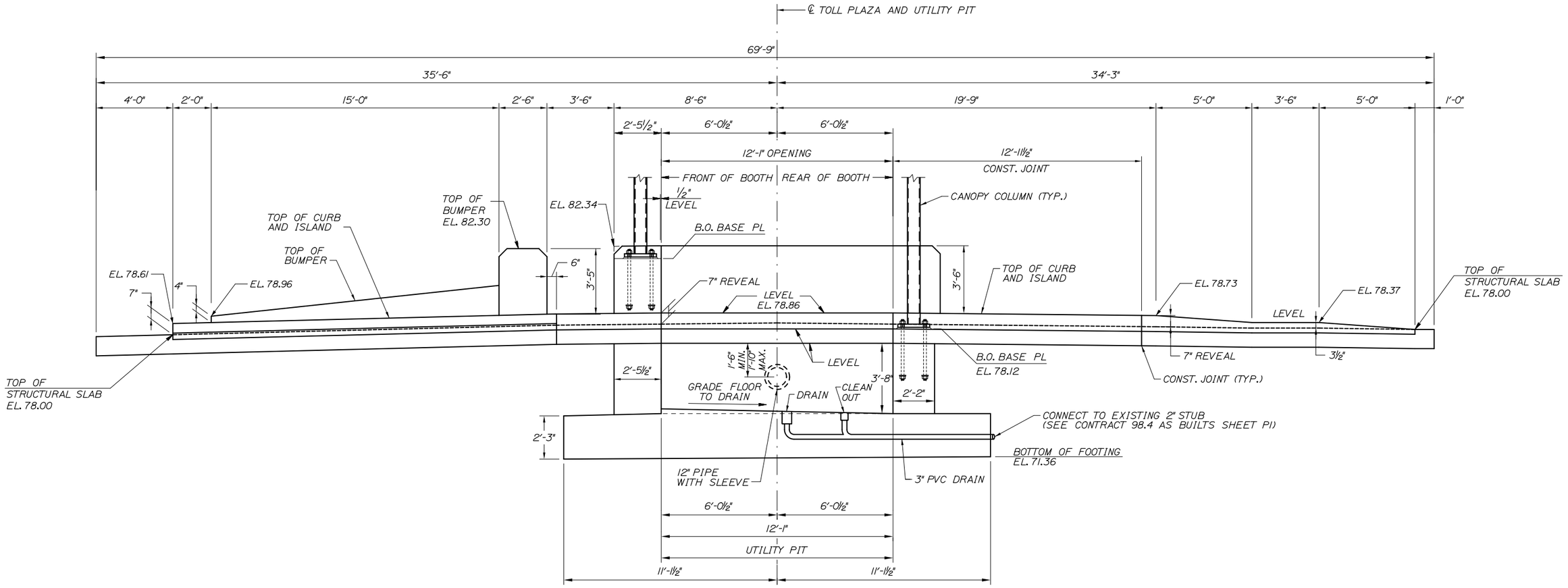

PROFILE OF CONCRETE WORK

SCALE: ⅜" = 1'-0"

Date:9/5/2015

Filename: 092_Exit46 NB_Prop Island Elevation.dgn

Scale: AS NOTED	Designed by: HNTB	HNTB CORPORATION 340 County Road, Suite 6-C Westbrook, ME 04092 TEL (207) 774-5155 FAX (207) 228-0909	MAINE TURNPIKE	THE GOLD STAR MEMORIAL HIGHWAY	INTERCHANGES 32, 36, & 46 NB TOLL SYSTEM UPGRADES INTERCHANGE 46 NB TOLL ISLAND ELEVATION

No.	Revision	By	Date

CONSULTANT PROJECT MANAGER: R. Bruce Munger, P.E.

	By	Date		By	Date
Designed	AGP	08/15	Checked	FAC	08/15
Drawn	KZT	08/15	In Charge of	RAL	08/15

MTA PROJECT MANAGER: William Yates

SHEET NUMBER: S-30

CONTRACT:2015.12

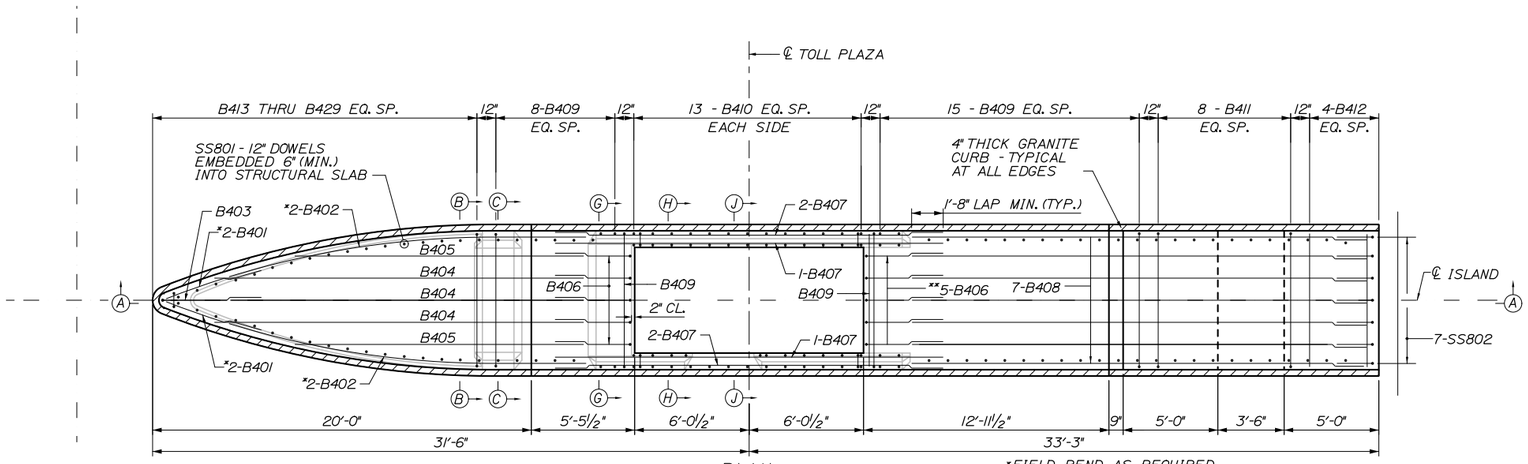

NOTE: STRUCTURAL SLAB, CANOPY COLUMNS, AND ROOF DRAIN NOT SHOWN.

PLAN
SCALE: 1/4" = 1'-0"

*FIELD BEND AS REQUIRED

**ADJUST AS REQUIRED TO CLEAR CANOPY SUPPORTS AND ROOF DRAIN

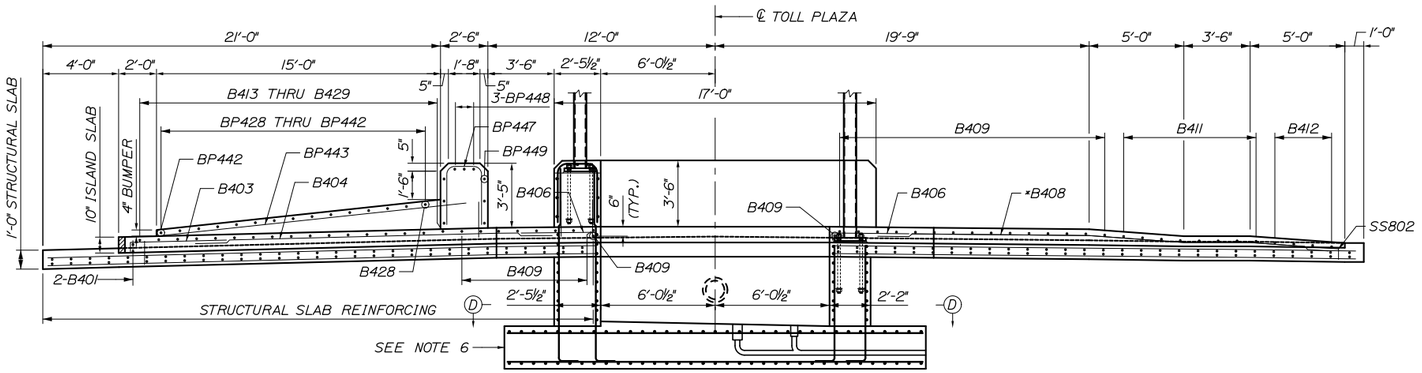

SECTION A-A
SCALE: 1/4" = 1'-0"

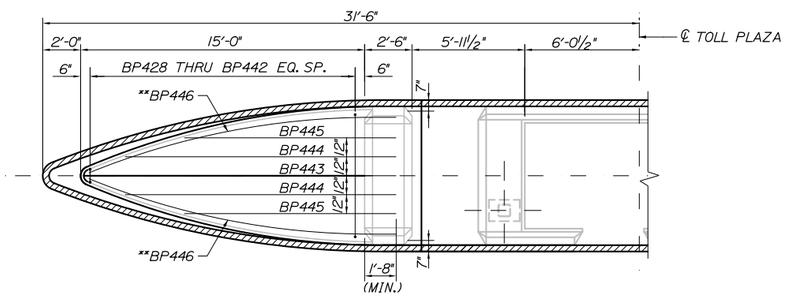

BUMPER REINFORCEMENT PLAN
SCALE: 1/4" = 1'-0"

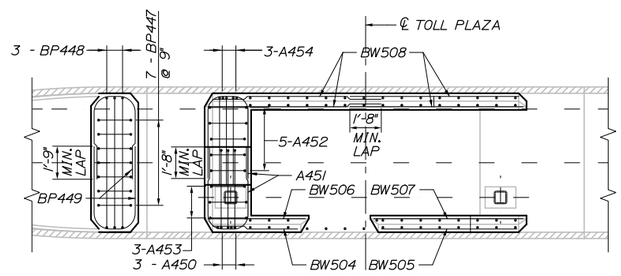

REINFORCEMENT LAYOUT AT BOOTH ENCLOSURE
SCALE: 1/4" = 1'-0"

NOTES:

1. FOR PROFILE OF CONCRETE WORK, SEE SHEET S-30.
2. FOR REINFORCEMENT OF STRUCTURAL SLAB, SEE SHEETS S-24, S-25, S-26, AND S-27.
3. FOR ADDITIONAL ISLAND DETAILS AND SECTIONS, SEE SHEET S-29.
4. ALL ISLAND SLAB, BOOTH ENCLOSURE, AND BUMPER REINFORCING SHALL BE EPOXY COATED.
5. EXPOSED ISLAND CONCRETE TO BE WATERPROOFED (SEE SPECIFICATIONS).
6. FOR PIT REINFORCEMENT, SEE SHEET S-29.
7. FOR SECTIONS B-B, C-C, D-D, G-G, H-H AND J-J, SEE SHEET S-29.

Scale: AS NOTED

No.	Revision	By	Date

Designed by: HNTB

CONSULTANT PROJECT MANAGER: R. Bruce Munger, P.E.

	By	Date		By	Date
Designed	AGP	08/15	Checked	FAC	08/15
Drawn	KZT	08/15	In Charge of	RAL	08/15

HNTB CORPORATION
340 County Road, Suite 6-C
Westbrook, ME 04092
TEL (207) 774-5155
FAX (207) 228-0909

MAINE TURNPIKE

THE GOLD STAR MEMORIAL HIGHWAY

MTA PROJECT MANAGER: William Yates

INTERCHANGES 32, 36, & 46 NB TOLL SYSTEM UPGRADES

INTERCHANGE 46 NB TOLL ISLAND DETAILS

SHEET NUMBER: S-31

CONTRACT:2015.12

Date:9/5/2015

Filename: 093_Exit46 NB_Prop Island Details.dgn

INTERCHANGE 46 NB - TOLL ISLAND

MARK	SIZE	NO.	LENGTH	TYPE	A	B	C	D	E	F	G	INCR.	REMARKS
ISLAND - SLAB													
B401	4	4	5' - 6"	STR									* FIELD BEND AS REQUIRED
B402	4	4	19' - 6"	STR									* FIELD BEND AS REQUIRED
B403	4	1	6' - 0"	17		6"	5'-6"						
B404	4	3	19' - 6"	STR									
B405	4	2	15' - 6"	STR									
B406	4	10	6' - 0"	17		6"	5'-6"						
B407	4	6	21' - 0"	STR									
B408	4	7	24' - 6"	STR									
B409	4	23	8' - 0"	17		6"	7'-0"	6"					
B410	4	26	1' - 7"	17		6"	6 1/2"	6"					
B411	4	8	7' - 6"	17		3"	7'-0"	3"					
B412	4	4	7' - 0"	STR									
B413	4	1	7' - 11"	17		6"	6'-11"	6"					
B414	4	1	7' - 10"	17		6"	6'-10"	6"					
B415	4	1	7' - 9"	17		6"	6'-9"	6"					
B416	4	1	7' - 8"	17		6"	6'-8"	6"					
B417	4	1	7' - 6"	17		6"	6'-6"	6"					
B418	4	1	7' - 3"	17		6"	6'-3"	6"					
B419	4	1	7' - 0"	17		6"	6'-0"	6"					
B420	4	1	6' - 8"	17		6"	5'-8"	6"					
B421	4	1	6' - 4"	17		6"	5'-4"	6"					
B422	4	1	5' - 11"	17		6"	4'-11"	6"					
B423	4	1	5' - 5"	17		6"	4'-5"	6"					
B424	4	1	5' - 0"	17		6"	4'-0"	6"					
B425	4	1	4' - 5"	17		6"	3'-5"	6"					
B426	4	1	3' - 10"	17		6"	2'-10"	6"					
B427	4	1	3' - 3"	17		6"	2'-3"	6"					
B428	4	1	2' - 6"	17		6"	1'-6"	6"					
B429	4	1	1' - 10"	17		6"	10"	6"					

MARK	SIZE	NO.	LENGTH	TYPE	A	B	C	D	E	F	G	INCR.	REMARKS
ISLAND - FRONT BUMPER BLOCK													
BP428	4	2	9' - 11"	17D	4 1/2"	1'-6'	2 3/4"	3'-3 1/2"					
BP429	4	2	9' - 9"	17D	4 1/4"	1'-5'	2 1/2"	3'-3"					
BP430	4	2	9' - 6"	17D	4 1/4"	1'-4'	2 1/2"	3'-2"					
BP431	4	1	9' - 0"	17D	4"	1'-3'	2 1/4"	3'-0 1/2"					
BP432	4	1	8' - 9"	17D	4"	1'-3'	2 1/4"	2'-11 1/2"					
BP433	4	1	8' - 3"	17D	3 3/4"	1'-2'	2"	2'-9 1/2"					
BP434	4	1	7' - 9"	17D	3 1/2"	1'-1'	2"	2'-7"					
BP435	4	1	7' - 3"	17D	3 1/4"	1'-0'	1 3/4"	2'-5"					
BP436	4	1	6' - 8"	17D	3"	1'-0'	1 3/4"	2'-2"					
BP437	4	1	6' - 0"	17D	2 3/4"	11"	1 1/2"	1'-11"					
BP438	4	1	5' - 4"	17D	2 1/4"	10"	1 1/2"	1-7 1/2"					
BP439	4	1	4' - 6"	17D	1 3/4"	10"	1 1/2"	1'- 3 1/2"					
BP440	4	1	3' - 9"	17D	1 1/2"	9"	1 1/4"	11 1/2"					
BP441	4	1	2' - 11"	17D	1"	8 1/2"	1 1/4"	7"					
BP442	4	1	2' - 1"	17D	--	8 1/2"	--	2"					
BP443	4	1	16' - 5"	STR									
BP444	4	2	14' - 4"	STR									
BP445	4	2	11' - 2"	STR									
BP446	4	2	16' - 8"	STR									* FIELD BEND AS REQUIRED
BP447	4	7	8' - 3"	17A		3'-1'	2'-1"	3'-1"					R=5 1/2' (INSIDE RADIUS)
BP448	4	3	11' - 4"	17B	3'-0"	5'-0'	3'-0"	6'-10"					R=5 1/2' (INSIDE RADIUS)
BP449	4	6	11' - 3"	17A		4'-6'	2'-2"	4'-6"					R=9 1/2' (INSIDE RADIUS)

INTERCHANGE 46 NB - TOLL ISLAND

MARK	SIZE	NO.	LENGTH	TYPE	A	B	C	D	E	F	G	INCR.	REMARKS
ISLAND - BOOTH ENCLOSURE AND BARRIER WALL													
A450	4	3	9' - 10"	17F	3'-1"	3'-2"	3'-1'	4'-1"					R=5 1/2" (INSIDE RADIUS)
A451	4	6	10' - 8"	17A		4'-3"	2'-1 1/2'	4'-3"					R=8 1/2" (INSIDE RADIUS)
A452	4	5	8' - 2"	17A		3'-1"	2'-0"	3'-1"					R=5 1/2" (INSIDE RADIUS)
A453	4	3	6' - 10"	17A		2'-5"	2'-0"	2'-5"					R=5 1/2" (INSIDE RADIUS)
A454	4	3	6' - 9"	17F	--	3'-10"	2'-5"	4'-7"					R=5 1/2" (INSIDE RADIUS)
A455	4	6	2' - 0"	17		1'-6"	6"	--					GRADE 40, FIELD BEND
BW501	5		-										
BW502	5	30	5' - 4"	17E	1'-0"	1'-4"	3'-0"	5 1/2"					
BW503	5	28	5' - 5"	17		1'-0"	4'-5"	--					
BW504	5	4	4' - 4"	STR									
BW505	5	4	7' - 2"	STR									
BW506	5	4	5' - 2"	STR									
BW507	5	4	7' - 10"	STR									
BW508	5	16	9' - 2"	STR									

MARK	SIZE	NO	LENGTH	TYPE	A	B	C	D	E	F	G	INCR.	REMARKS
ISLAND - UTILITY VAULT													
V401	4	8	18' - 7"	17		2'-6"	13'-7"	2'-6"					
V402	4	8	15' - 7"	17		1'-0"	13'-7"	1'-0"					
V403	4	20	10' - 2"	17		4'-0"	2'-2'	4'-0"					
V404	4	20	9' - 10"	17		4'-0"	1'-10"	4'-0"					
V601	6	28	11' - 7"	17		1'-0"	10'-7"	--					
V602	6	24	7' - 3"	17		1'-0"	6'-3"	--					
V603	6	40	7' - 3"	17		1'-0"	6'-3"	--					
V604	6	36	6' - 0"	STR									
V701	7	70	7' - 7"	STR									
V702	7	22	21' - 9"	STR									

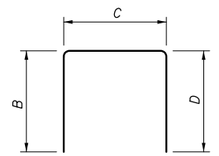

TYPE 17

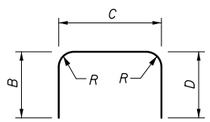

TYPE 17A

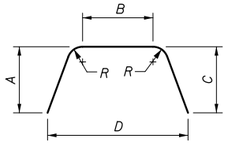

TYPE 17B

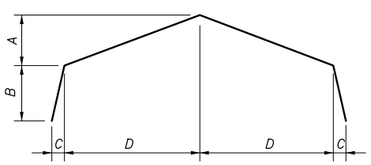

TYPE 17D

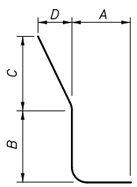

TYPE 17E

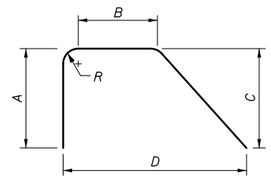

TYPE 17F

Date:9/5/2015

Filename: 094_Exit46 NB_TollIsland Rebar Schedule.dgn

Scale: N.T.S.				Designed by: HNTB					
No.	Revision	By	Date	CONSULTANT PROJECT MANAGER: R. Bruce Munger, P.E.					
					By	Date		By	Date
				Designed	AGP	08/15	Checked	FAC	08/15
				Drawn	KZT	08/15	In Charge of	RAL	08/15

HNTB CORPORATION
340 County Road, Suite 6-C
Westbrook, ME 04092
TEL (207) 774-5155
FAX (207) 228-0909

MAINE TURNPIKE

THE GOLD STAR MEMORIAL HIGHWAY

MTA PROJECT MANAGER: William Yates

INTERCHANGES 32, 36, & 46 NB
TOLL SYSTEM UPGRADES
INTERCHANGE 46 NB
TOLL ISLAND REINFORCEMENT SCHEDULE

SHEET NUMBER: S-32

CONTRACT:2015.12

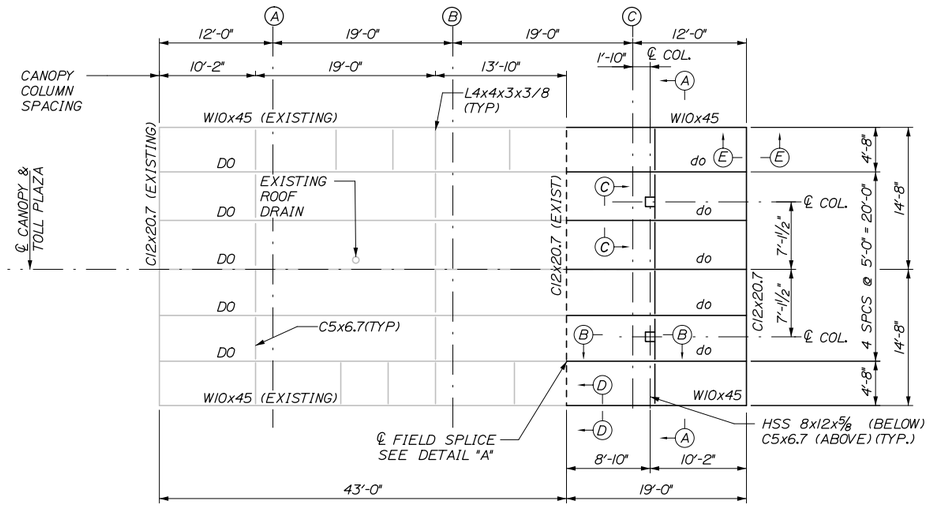

FRAMING PLAN - TOLL PLAZA CANOPY

SCALE: 1/8" = 1'-0"

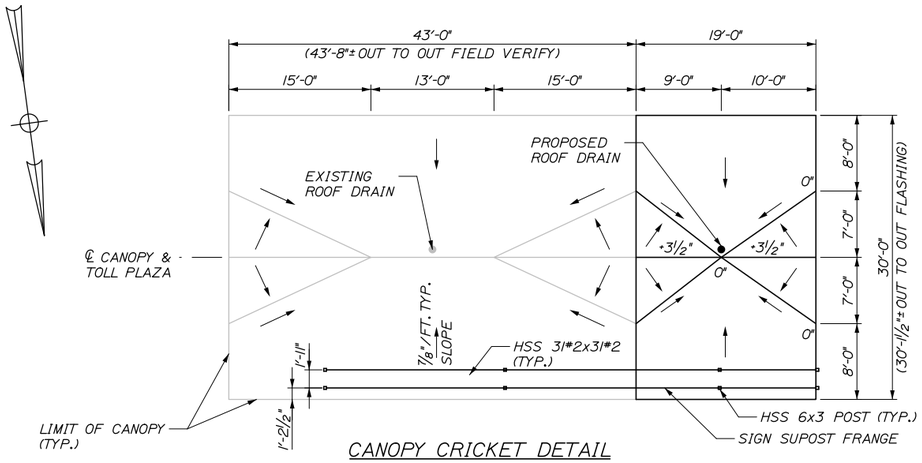

CANOPY CRICKET DETAIL

SCALE: 1/8" = 1'-0"

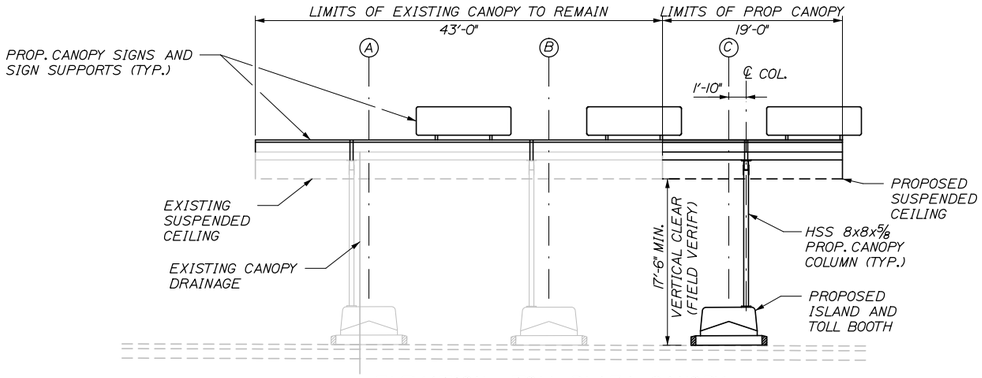

ELEVATION - TOLL PLAZA CANOPY

SCALE: 1/8" = 1'-0"

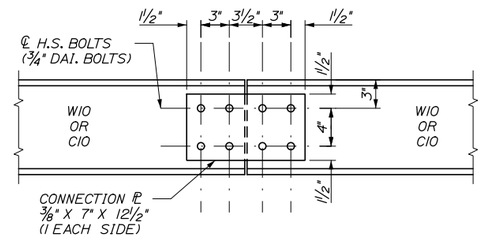

FIELD SPLICE DETAIL

SCALE 1 1/2" = 1'

NOTES:

1. REMOVAL OF ANY EXISTING STRUCTURAL STEEL REQUIRED TO FIELD SPLICE SHALL BE INCIDENTAL TO THE 800.501 CANOPY PAY ITEM.

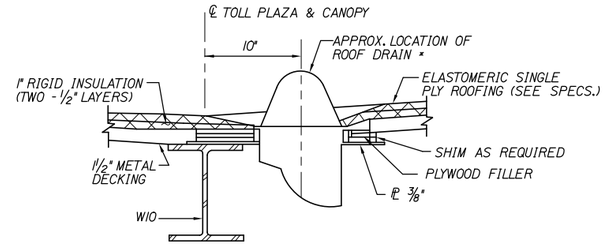

SECTION K-K

NTS

* NOTE: FOR ADDITIONAL DETAILS FOR THE INSTALLATION OF ROOF DRAIN, SEE MECHANICAL DRAWINGS.

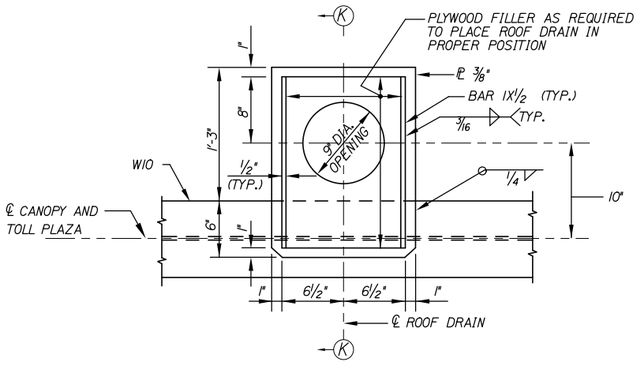

DETAIL B

NTS

NOTES:

1. FOR SECTIONS A-A, B-B, C-C, D-D, E-E AND G-G SEE SHEET S-34
2. STRUCTURAL STEEL FOR CANOPY FRAMING SHALL CONFORM TO THE FOLLOWING:
   ANGLES, PLATES AND CHANNELS -ASTM A572 GRADE 50.
   WIDE FLANGE SECTIONS -ASTM A992.
   HOLLOW STRUCTURAL SECTIONS (HSS) -ASTM A500 GRADE B.
3. CONNECTION BETWEEN STEEL ELEMENTS SHALL BE MADE WITH EITHER ASTM A325 HIGH STRENGTH BOLTS OR WELD MATERIAL CONFORM TO E70XX. MINIMUM BOLT SIZE SHALL BE 3/4"ϕ UNLESS NOTED OTHERWISE IN STANDARD HOLES. MINIMUM WELD SIZE SHALL BE 1/4" INCH UNLESS NOTED OTHERWISE.
4. ANCHOR RODS SHALL CONFORM TO ASTM F1554 GRADE 55, AND SHALL BE HOT DIPPED GALVANIZED IN ACCORDANCE WITH ASTM A153.
5. METAL ROOF DECK SHALL CONFORM TO ASTM A653, STRUCTURAL GRADE 33, AND SHALL HAVE ZINC COATED FINISH OF G-90 OR BETTER MINIMUM; GAGE OF 18 WITH THE FOLLOW MINIMUM CROSS SECTIONAL PROPERTIES.
   IP = 0.289 in4/ft SP = 0.318 in4/ft
   IN = 0.295 in4/ft SN = 0.327 in4/ft

Date:9/5/2015

Filename: 095_Exit46 NB_Prop Canopy Framing & Dets.dgn

Scale: AS NOTED

No.	Revision	By	Date

Designed by: HNTB

CONSULTANT PROJECT MANAGER: R. Bruce Munger, P.E.

	By	Date		By	Date
Designed	AGP	08/15	Checked	FAC	08/15
Drawn	KZT	08/15	In Charge of	RAL	08/15

HNTB CORPORATION
340 County Road, Suite 6-C
Westbrook, ME 04092
TEL (207) 774-5155
FAX (207) 228-0909

MAINE TURNPIKE

THE GOLD STAR MEMORIAL HIGHWAY

MTA PROJECT MANAGER: William Yates

INTERCHANGES 32, 36, & 46 NB TOLL SYSTEM UPGRADES

INTERCHANGE 46 NB CANOPY FRAMING PLAN & DETAILS

SHEET NUMBER: S-33

CONTRACT:2015.12

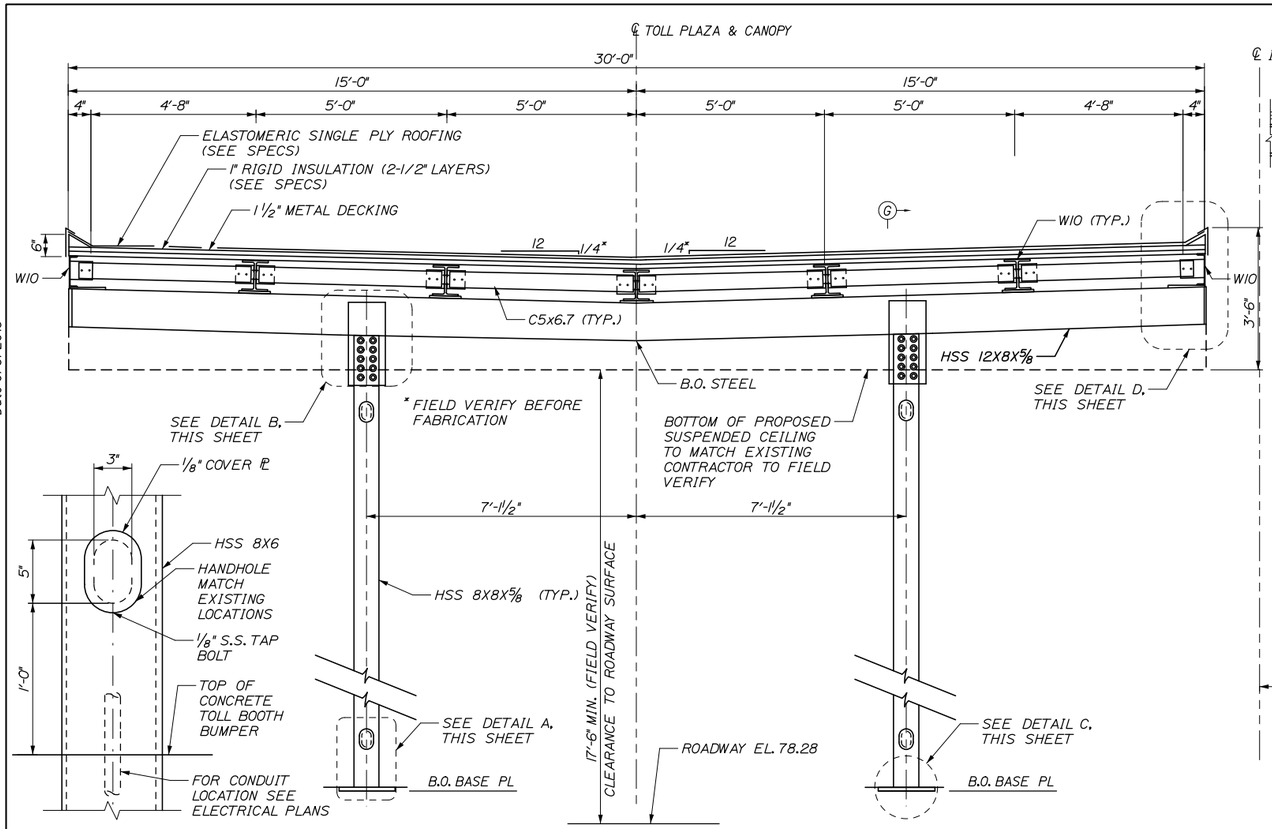

DETAIL A
1"=1'-0"

SECTION A-A
NTS

DETAIL B
1"=1'-0"

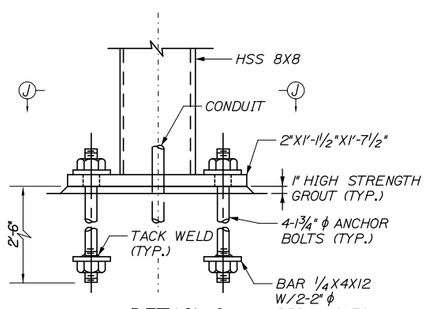

DETAIL C
1 1/2"=1'-0"

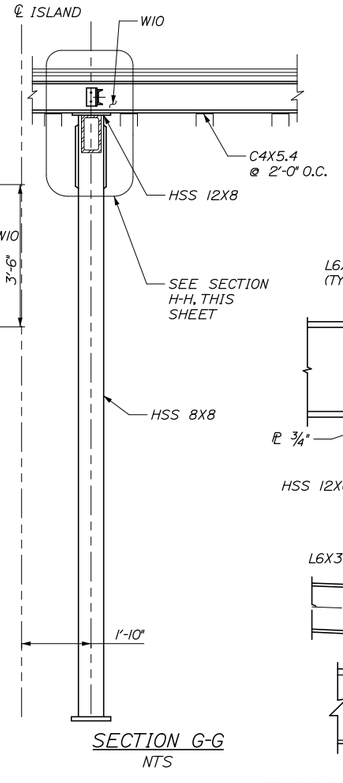

SECTION G-G
NTS

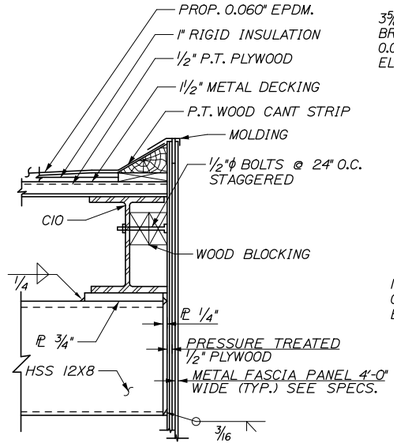

DETAIL D
NTS

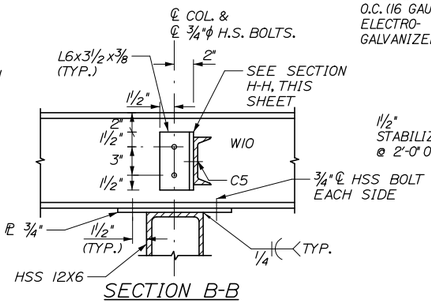

SECTION B-B
NTS

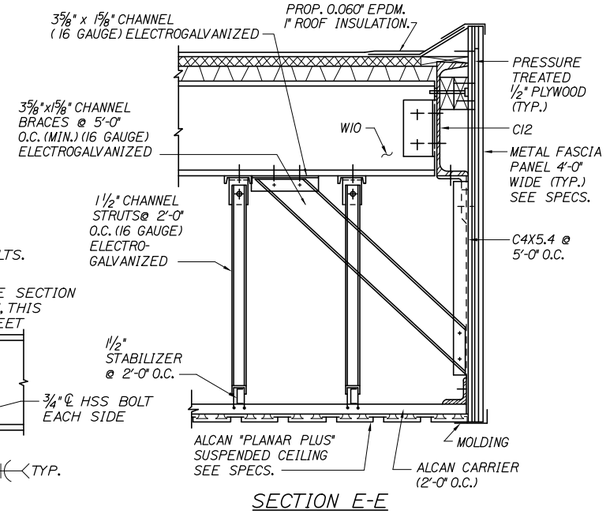

SECTION E-E
NTS

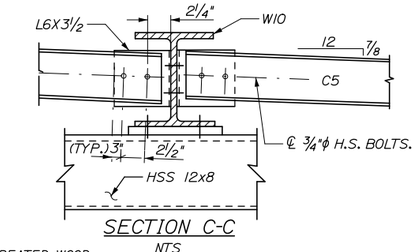

SECTION C-C
NTS

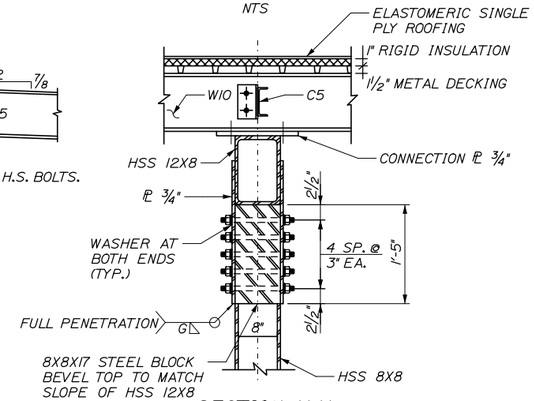

SECTION H-H
NTS

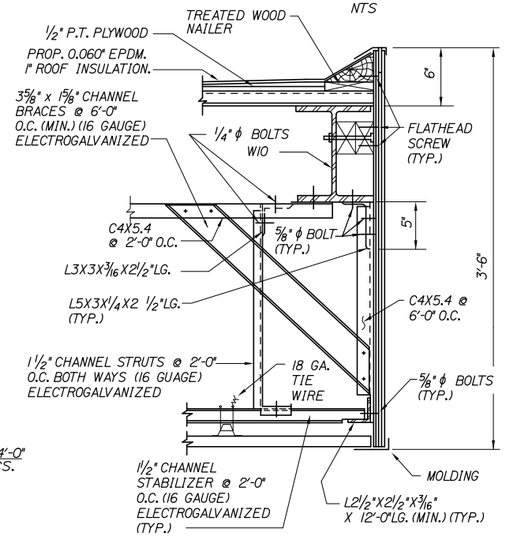

SECTION D-D
NTS

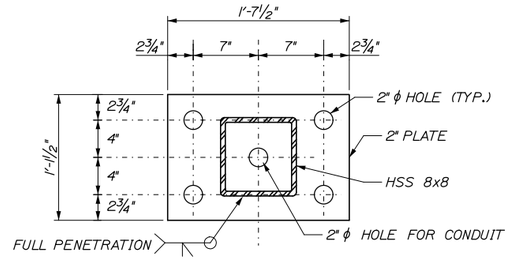

SECTION J-J
NTS

Date:9/5/2015

Filename: 096_Exit46 NB_Prop Canopy Sections & Dets.dgn

Scale: AS NOTED	Designed by: HNTB	HNTB CORPORATION 340 County Road, Suite 6-C Westbrook, ME 04092 TEL (207) 774-5155 FAX (207) 228-0909	MAINE TURNPIKE	THE GOLD STAR MEMORIAL HIGHWAY	INTERCHANGES 32, 36, & 46 NB TOLL SYSTEM UPGRADES
	CONSULTANT PROJECT MANAGER: R. Bruce Munger, P.E.			MTA PROJECT MANAGER: William Yates	INTERCHANGE 46 NB CANOPY SECTIONS & DETAILS
	Designed: AGP 08/15 — Checked: FAC 08/15				SHEET NUMBER: S-34
	Drawn: KZT 08/15 — In Charge of: RAL 08/15				CONTRACT:2015.12 96 OF 118

No.	Revision	By	Date

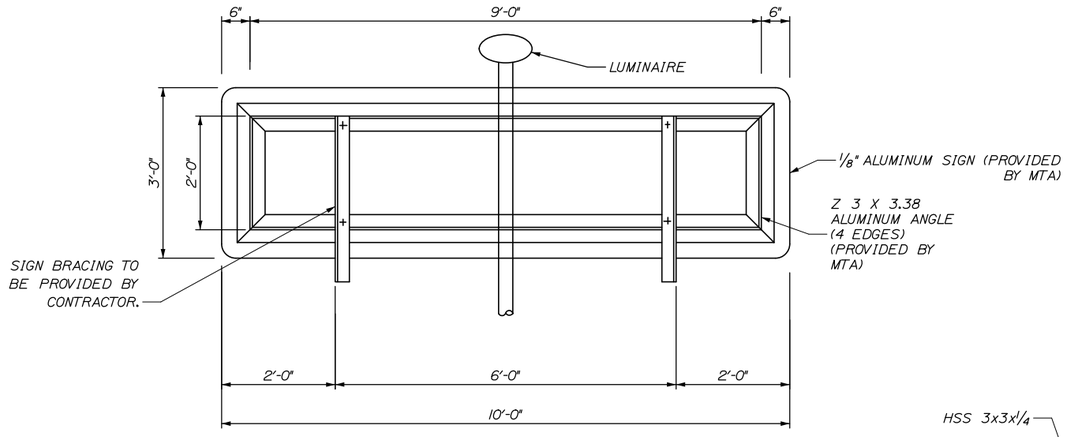

SIGN ELEVATION (REAR VIEW)
NTS

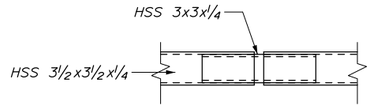

SPLICE DETAIL
1 1/2" = 1'-0"

NOTE:
SPLICES SHALL BE LOCATED OVER THE CENTERLINE OF THE ISLAND.

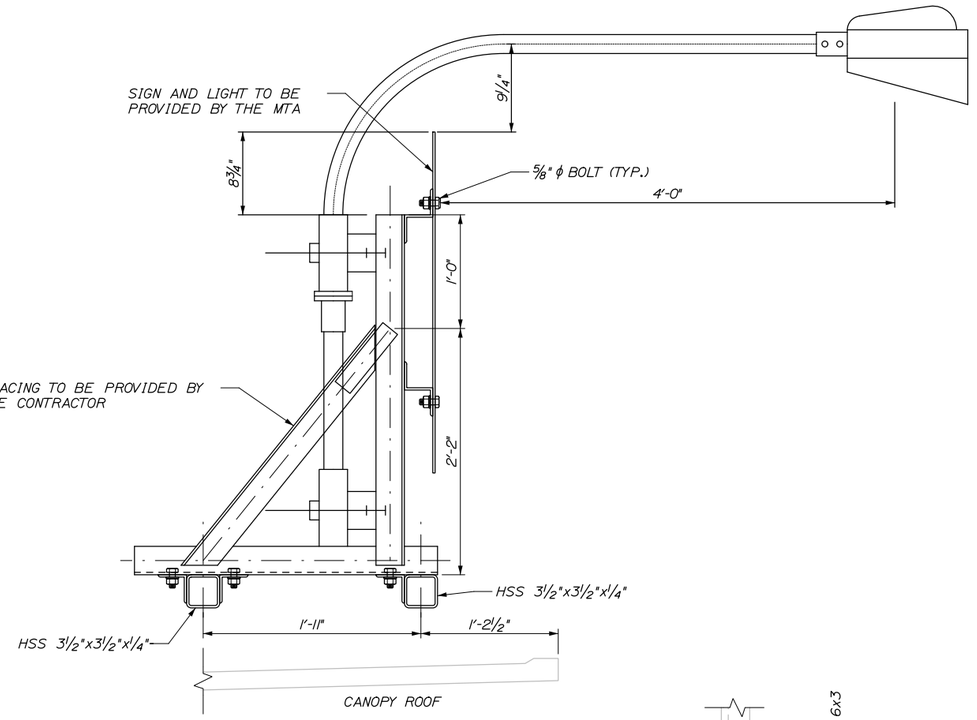

CANOPY MOUNTED SIGN
1 1/2" = 1'-0"

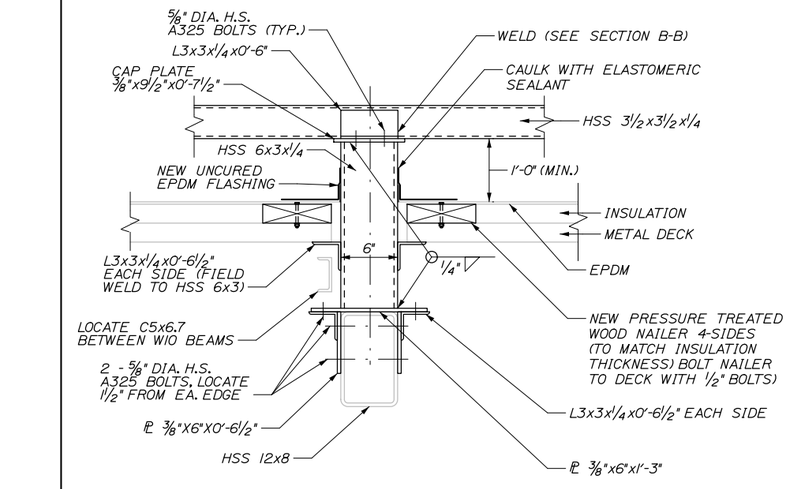

CANOPY MOUNTED INTERIOR SIGN POST
1 1/2" = 1'-0"

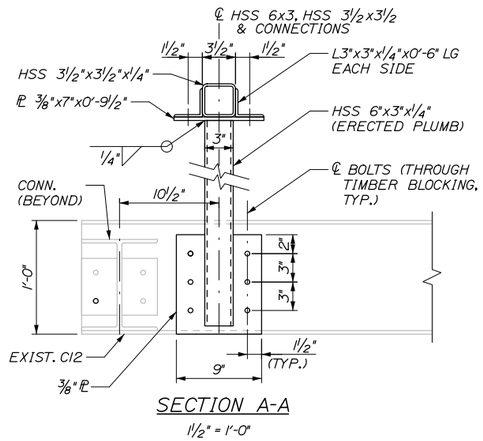

SECTION A-A
1 1/2" = 1'-0"

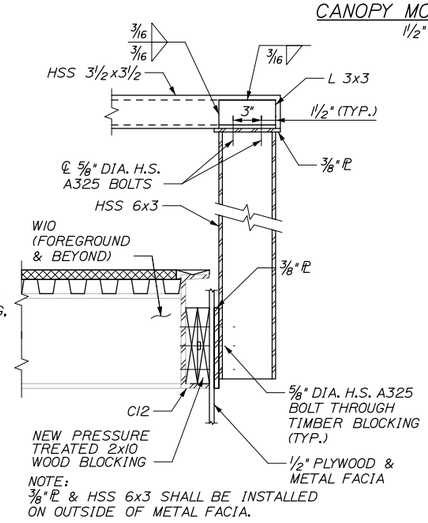

NOTE:
3/8" PL & HSS 6x3 SHALL BE INSTALLED ON OUTSIDE OF METAL FACIA.

SECTION B-B
1 1/2" = 1'-0"

CANOPY MOUNTED EXTERIOR SIGN COLUMN

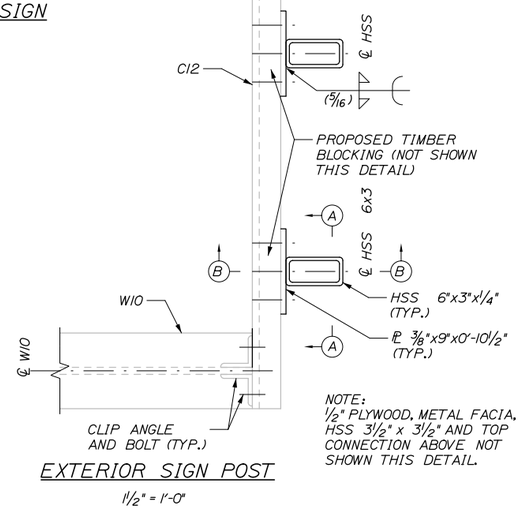

NOTE:
1/2" PLYWOOD, METAL FACIA, HSS 3 1/2" x 3 1/2" AND TOP CONNECTION ABOVE NOT SHOWN THIS DETAIL.

EXTERIOR SIGN POST
1 1/2" = 1'-0"

NOTES:

1. CONTRACTOR TO SUBMIT FLASHING DETAILS FOR REVIEW PRIOR TO CONSTRUCTION.

Date:9/5/2015

Filename: 097_Exit46_CanopySignDetails.dgn

Scale: AS NOTED

No.	Revision	By	Date

Designed by: HNTB

CONSULTANT PROJECT MANAGER: R. Bruce Munger, P.E.

	By	Date		By	Date
Designed	AGP	08/15	Checked	FAC	08/15
Drawn	KZT	08/15	In Charge of	RAL	08/15

HNTB CORPORATION
340 County Road, Suite 6-C
Westbrook, ME 04092
TEL (207) 774-5155
FAX (207) 228-0909

MAINE TURNPIKE

THE GOLD STAR MEMORIAL HIGHWAY

MTA PROJECT MANAGER: William Yates

INTERCHANGES 32, 36, & 46 NB
TOLL SYSTEM UPGRADES

INTERCHANGE 46 NB
CANOPY SIGNS AND TYPICAL SECTIONS

SHEET NUMBER: S-35

CONTRACT:2015.12

Date:9/5/2015

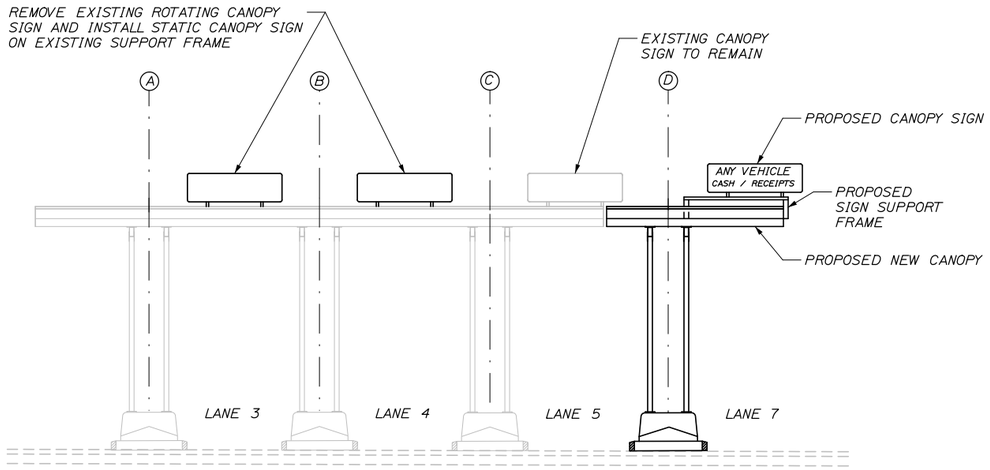

INTERCHANGE 32 - CANOPY SIGNS

SCALE: 1/8" = 1'-0"

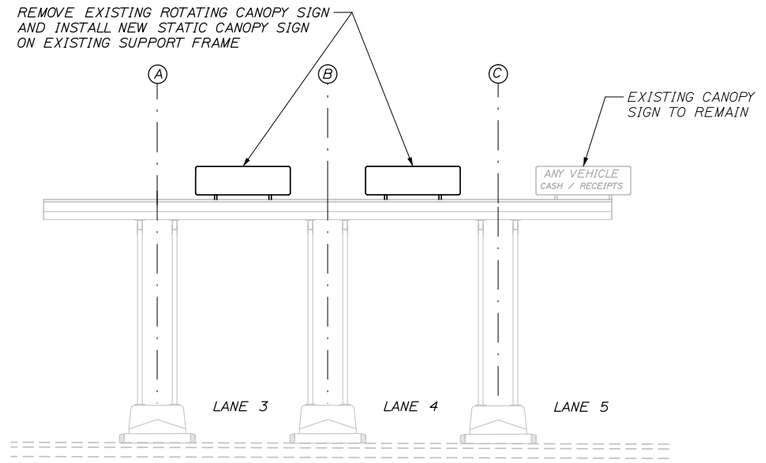

INTERCHANGE 36 - CANOPY SIGNS

SCALE: 1/8" = 1'-0"

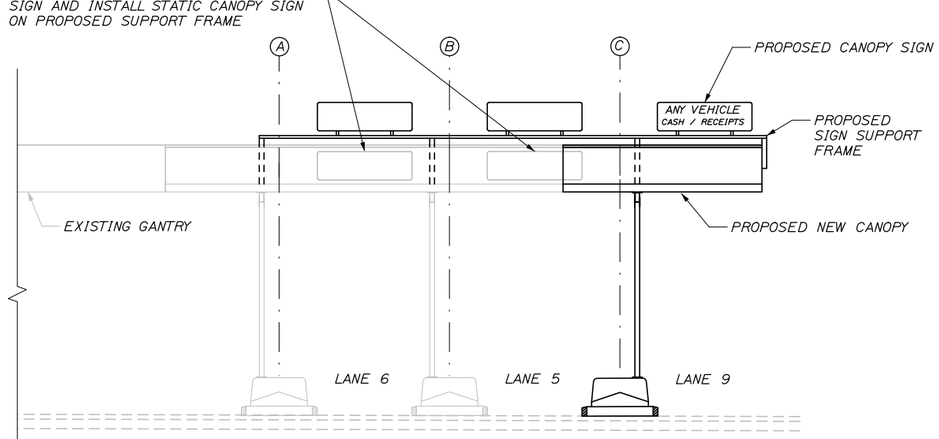

INTERCHANGE 46 NB - CANOPY SIGNS

SCALE: 1/8" = 1'-0"

NOTE:

1. EXISTING CANOPY SIGNS TO BE REMOVED AND STACKED

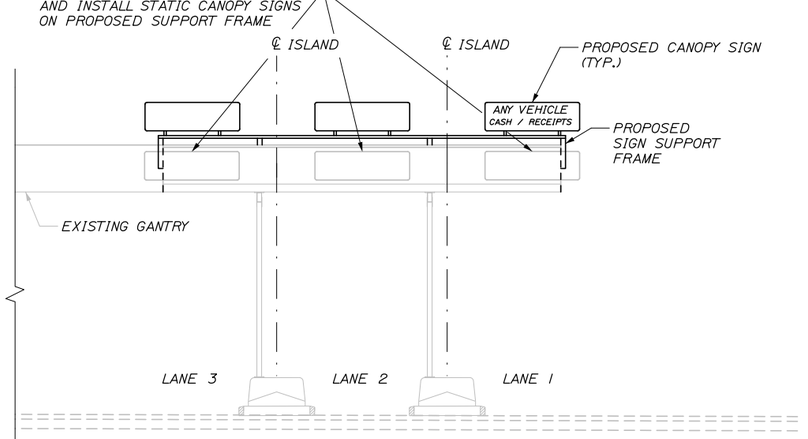

INTERCHANGE 47 - CANOPY SIGNS

SCALE: 1/8" = 1'-0"

NOTE:

1. EXISTING CANOPY SIGNS TO BE REMOVED AND STACKED

NOTES:

1. FOR CANOPY FRAMING PLANS FOR INTERCHANGES 32 AND 46, SEE SHEETS S-11 AND S-33.
2. FOR SIGN SUPPORT DETAILS, SEE SHEET S-35.

Filename: 098_CanopySigns.dgn

Scale: AS NOTED	Designed by: HNTB	HNTB CORPORATION 340 County Road, Suite 6-C Westbrook, ME 04092 TEL (207) 774-5155 FAX (207) 228-0909	MAINE TURNPIKE THE GOLD STAR MEMORIAL HIGHWAY	INTERCHANGES 32, 36, & 46 NB TOLL SYSTEM UPGRADES CANOPY SIGNING PLAN

No.	Revision	By	Date

CONSULTANT PROJECT MANAGER: R. Bruce Munger, P.E.

	By	Date		By	Date
Designed	AGP	08/15	Checked	FAC	08/15
Drawn	KZT	08/15	In Charge of	RAL	08/15

MTA PROJECT MANAGER: William Yates

SHEET NUMBER: S-36

CONTRACT:2015.12

CABINET UNIT HEATER SCHEDULE

TAG	DESIGN MANUFACTURER & MODEL	SUPPLY FAN			ELECTRIC			HOT WATER HEATING COIL								WEIGHT (LBS)	REMARKS	CONTROLS AND ACCESSORIES BY MANUFACTURER OF UNIT
		CFM	RPM	HP	POWER	MCA	MOP	EDB	LDB	BTUH	EWT	LWT	GPM	WPD	ROWS			
CUH-1	TRANE FFMB06 OR APPROVED EQUAL	541	727	0.22	115/60/1	3.88	15	60	138	46,000	190	135	2.00	1.11 Ft	3	146	SURFACE, FLOOR MOUNT - INVERTED FLOW, FRONT INTAKE, FRONT DISCHARGE (MAX. 29" HIGH, 50" WIDE CABINET)	3-WAY DIVERTING ELECTRIC CONTROL VALVE, CIRCUIT SETTER, REMOTE THERMOSTAT, SHUTOFF VALVES AND POWER DISCONNECT

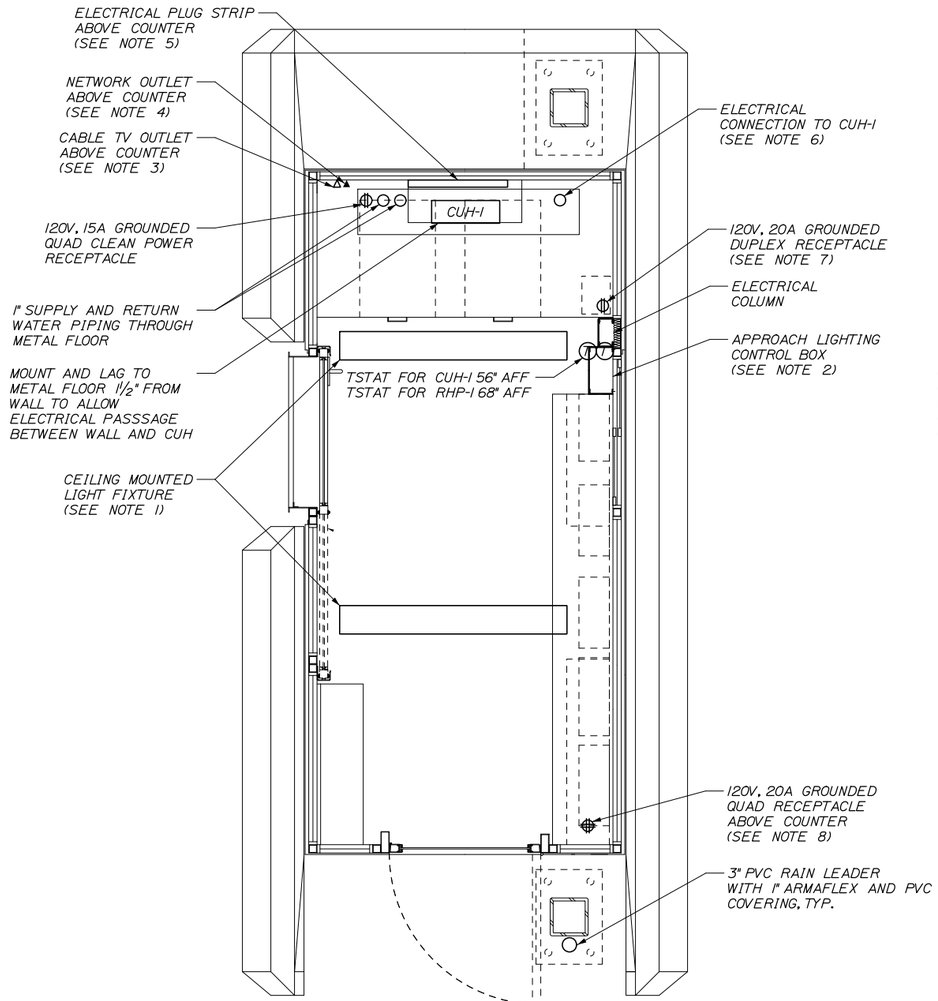

EXIT 46 TOLL BOOTH
¾" = 1'-0"

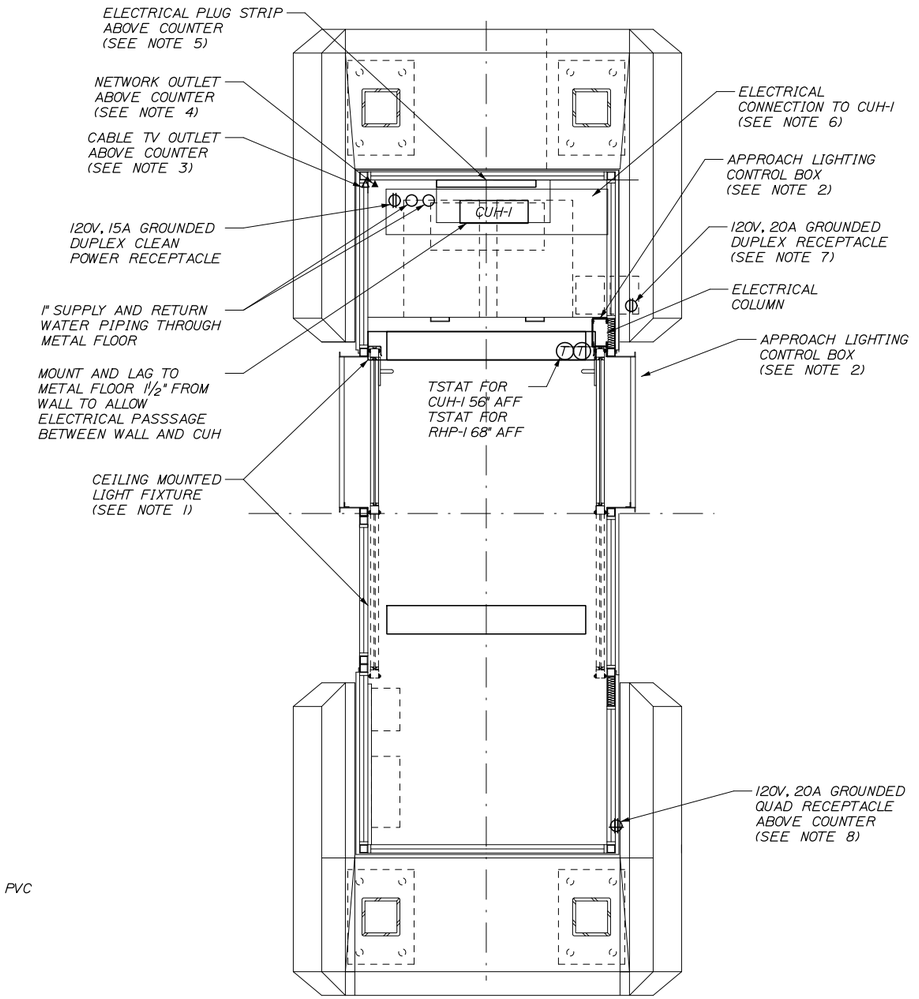

EXIT 32 TOLL BOOTH
¾" = 1'-0"

NOTES:

1. PROVIDE NEW CEILING MOUNTED LIGHT FIXTURES IN BOTH PROPOSED AND EXISTING BOOTHS THAT REMAIN. LIGHTS SHALL BE CREE *SMK-LE-S/SMK-LE-EC/CR-LE-32L-35K-10V, OR APPROVED EQUAL.

2. AT THE PROPOSED BOOTHS, PROVIDE APPROACH LIGHTING CONTROL SWITCHES TO BE INSTALLED ADJACENT TO THE ELECTRICAL COLUMN. IN BOTH THE PROPOSED BOOTHS AND THE EXISTING BOOTHS THAT ARE TO REMAIN, PROVIDE A 120 VOLT DIMMER WIRED TO THE CEILING LIGHTS. WIRE THE BOOTH LIGHTS TO A 20A/1P BREAKER IN THE RESPECTIVE CLEAN POWER PANEL.

3. PROVIDE A COAX OUTLET WITH RG6 CABLE EXTENDED THROUGH THE TUNNEL TO THE TELEPHONE BOARD IN THE PLAZA BUILDING.

4. PROVIDE A CAT5e NETWORK OUTLET WITH CAT5e CABLE EXTENDED THROUGH THE TUNNEL TO THE TELEPHONE BOARD IN THE PLAZA BUILDING.

5. PROVIDE PLUG-STRIP ABOVE THE BOOTH COUNTER. PLUG STRIP SHALL BE LEGRAND *2000 USB SERIES. PLUG STRIP SHALL HAVE A DUPLEX USB JACK AT ONE END AND FOUR 15A, GROUNDED ELECTRICAL OUTLETS SPACED ALONG THE REMAINING LENGTH. WIRE THE PLUG STRIP TO A 20A/1P BREAKER IN THE RESPECTIVE DIRTY POWER PANEL.

6. VERIFY EXACT LOCATION OF ELECTRICAL CONNECTION POINT FOR CUH-1. WIRE CUH-1 TO A 15A/1P BREAKER IN THE RESPECTIVE DIRTY POWER PANEL.

7. PROVIDE A 120V, 20A DUPLEX RECEPTACLE TO BE INSTALLED IN THE ELECTRICAL COLUMN 18" ABOVE THE FLOOR. CONNECT THE RECEPTACLE TO A 20A/1P BREAKER IN THE RESPECTIVE DIRTY POWER PANEL.

8. PROVIDE A 120V, 20A QUAD RECEPTACLE INSTALLED ABOVE THE COUNTER. CONNECT THE RECEPTACLE TO THE PLUG STRIP CIRCUIT (SEE NOTE 5).

Date:9/5/2015

Filename: 099_Booth Details.dgn

Scale:

No.	Revision	By	Date

Designed by: HNTB

CONSULTANT PROJECT MANAGER: R. Bruce Munger, P.E.

	By	Date		By	Date
Designed	KM	08/15	Checked	RBM	08/15
Drawn	PMK	08/15	In Charge of	RAL	08/15

HNTB CORPORATION
340 County Road, Suite 6-C
Westbrook, ME 04092
TEL (207) 774-5155
FAX (207) 228-0909

MAINE TURNPIKE

THE GOLD STAR MEMORIAL HIGHWAY

MTA PROJECT MANAGER: William Yates

INTERCHANGES 32, 36, & 46 NB
TOLL SYSTEM UPGRADES

INTERCHANGES 32 AND 46 NB
ELECTRICAL & MECHANICAL BOOTH DETAILS

SHEET NUMBER: EM-01

CONTRACT:2015.12

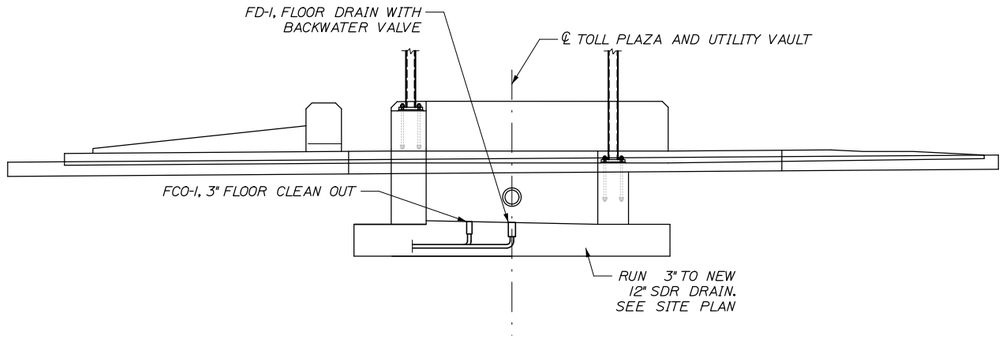

ISLAND ELEVATION
3/16" = 1'-0"

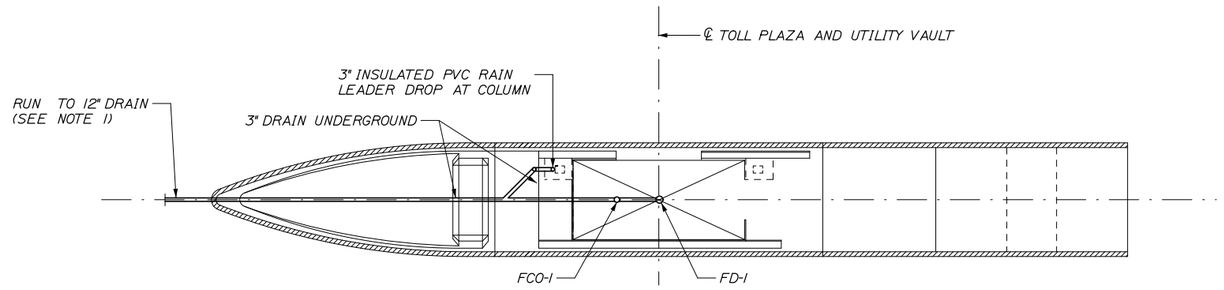

ISLAND PLAN
3/16" = 1'-0"

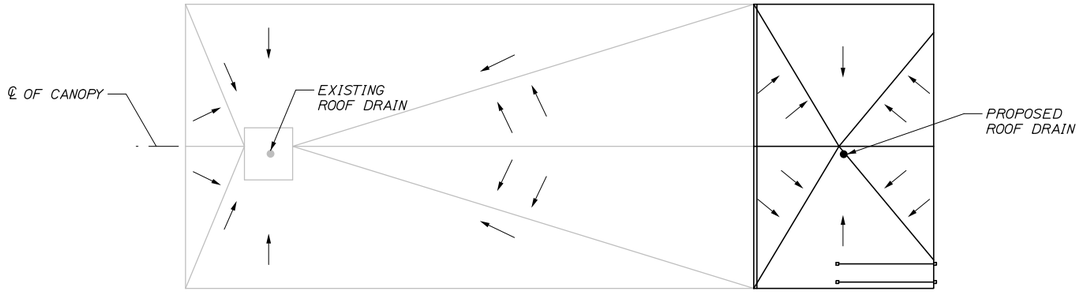

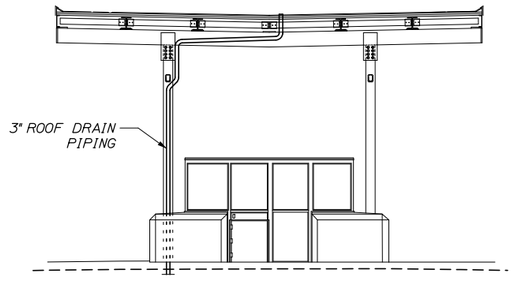

BOOTH AND CANOPY ELEVATION
3/16" = 1'-0"

NOTES:

1. CONNECT 3" PIT DRAIN TO 12" RCP STORM DRAIN WITH INSERTA TEE OR APPROVED EQUAL. PAYMENT SHALL BE INCIDENTAL TO 3" DRAIN PIPE.

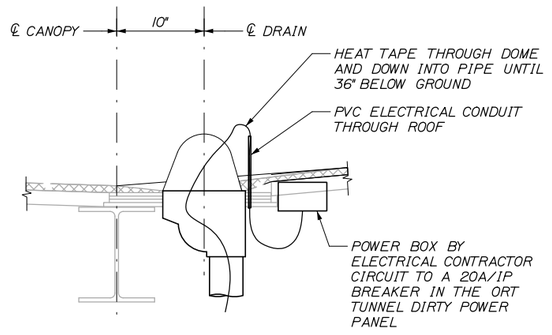

SECTION A - A
NTS

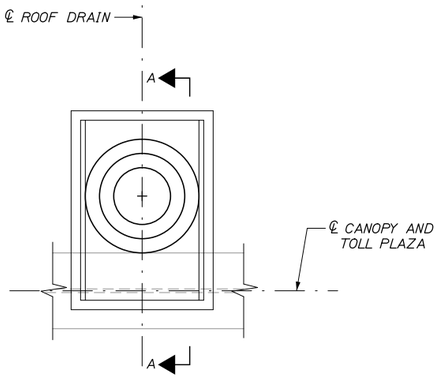

ROOF DRAIN PLAN
NTS

Date:9/5/2015

Filename: 100_CanopyBooth-ElecMech.dgn

No.	Revision	By	Date

Scale:

Designed by: HNTB

CONSULTANT PROJECT MANAGER: R. Bruce Munger, P.E.

	By	Date		By	Date
Designed	RBM	08/15	Checked	RBM	08/15
Drawn	PMK	08/15	In Charge of	RAL	08/15

HNTB CORPORATION
340 County Road, Suite 6-C
Westbrook, ME 04092
TEL (207) 774-5155
FAX (207) 228-0909

MAINE TURNPIKE

THE GOLD STAR MEMORIAL HIGHWAY

MTA PROJECT MANAGER: William Yates

INTERCHANGES 32, 36, & 46 NB TOLL SYSTEM UPGRADES
INTERCHANGE 32
MECHANICAL & ELECTRICAL
BOOTH & CANOPY DETAIL

SHEET NUMBER: EM-02

CONTRACT:2015.12

Date:9/5/2015

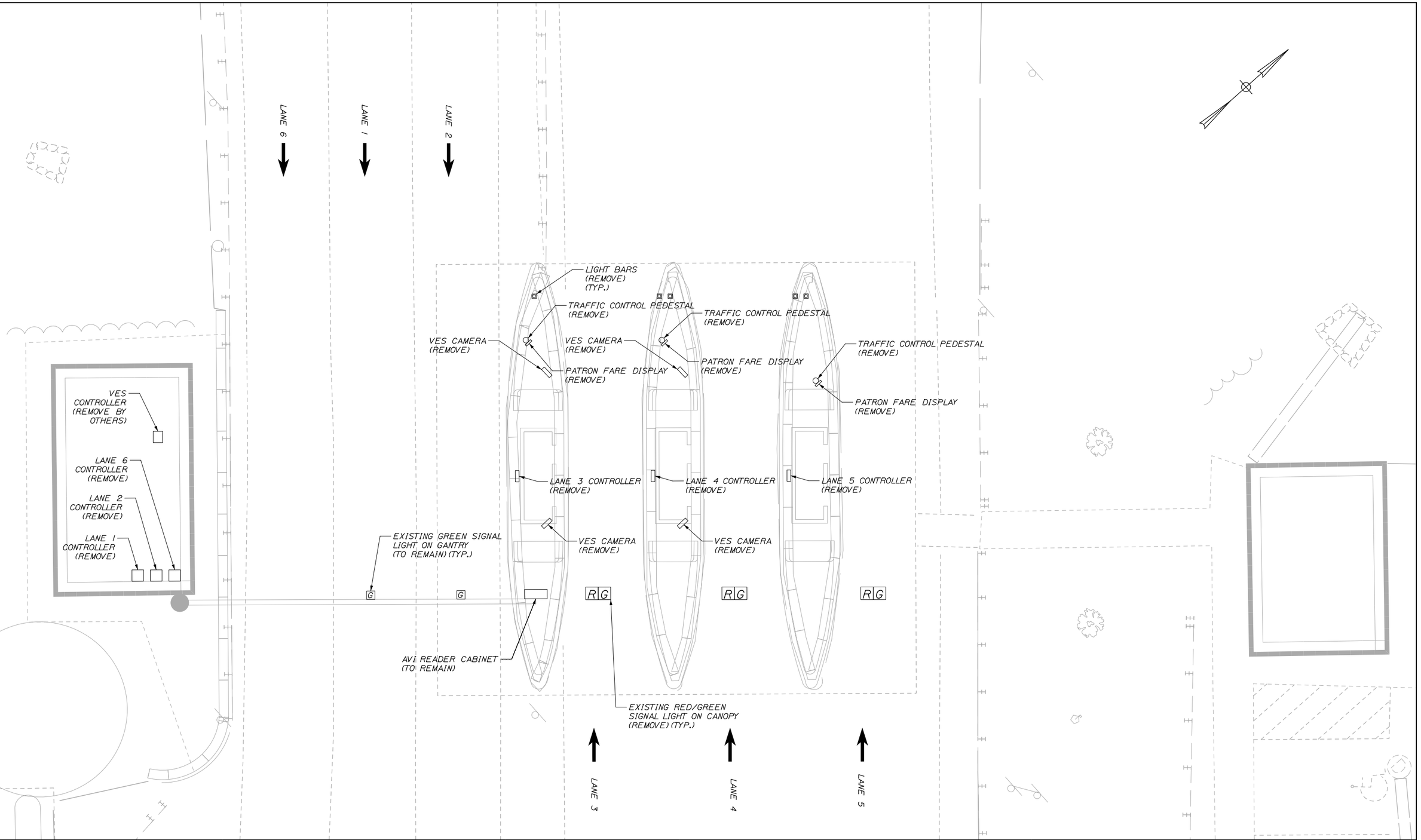

Filename: 101_Exit32_ElecExist.dgn

Scale: 6 0 6 12

No.	Revision	By	Date

Designed by: HNTB

CONSULTANT PROJECT MANAGER: R. Bruce Munger, P.E.

	By	Date		By	Date
Designed	WA	08/15	Checked	WA	08/15
Drawn	CNP	08/15	In Charge of	RAL	08/15

HNTB CORPORATION
340 County Road, Suite 6-C
Westbrook, ME 04092
TEL (207) 774-5155
FAX (207) 228-0909

MAINE TURNPIKE

THE GOLD STAR MEMORIAL HIGHWAY

MTA PROJECT MANAGER: William Yates

INTERCHANGES 32, 36, & 46 NB TOLL SYSTEM UPGRADES

INTERCHANGE 32 EXISTING ELECTRICAL PLAN

SHEET NUMBER: EM-03

CONTRACT:2015.12

DETAIL A
STUB UP IN CASH LANE SLAB
SECTION VIEW

NOTE: SEALING STUB-UPS SHALL BE INCIDENTAL TO THE PVC PAY ITEM.

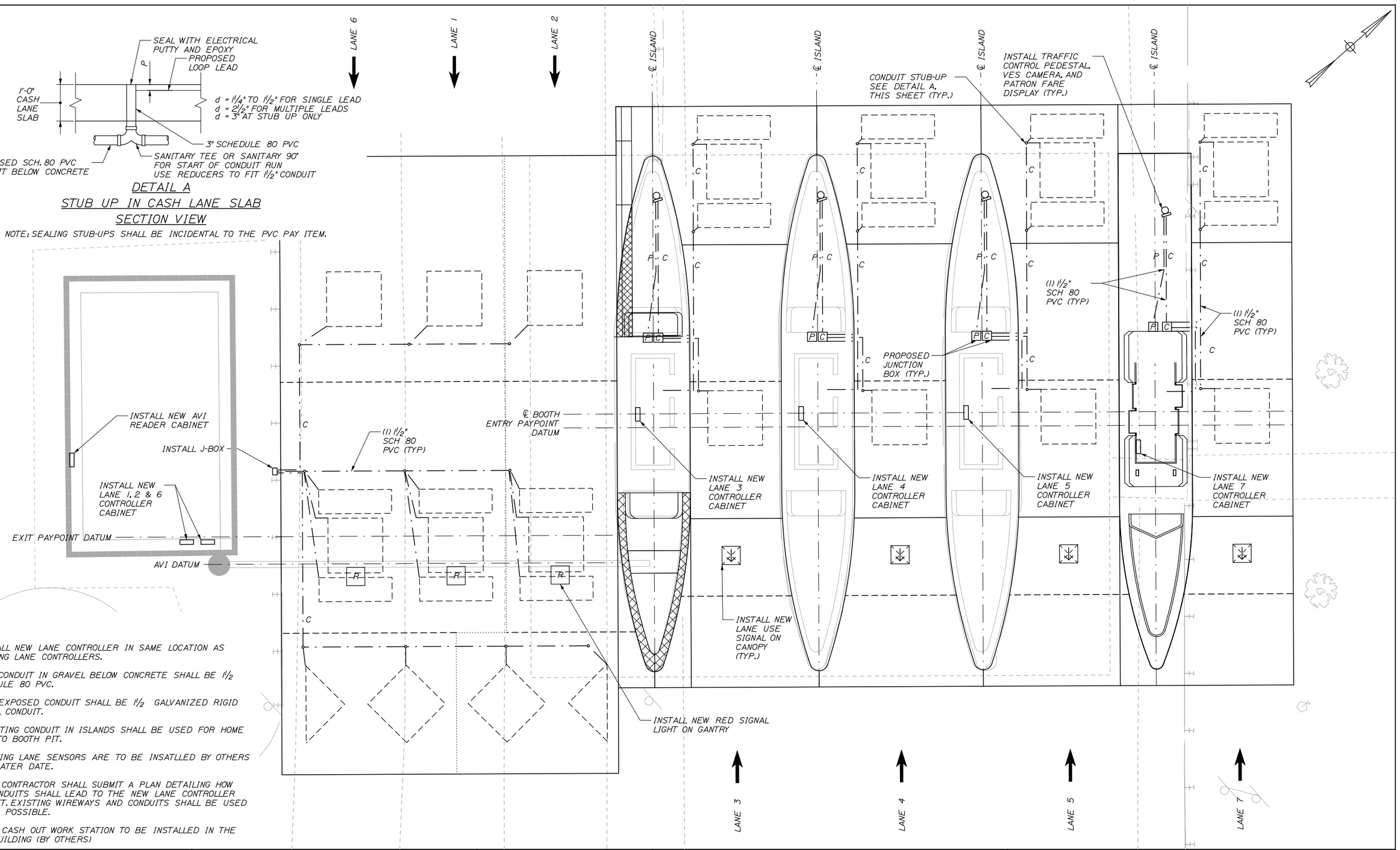

NOTES:

1. INSTALL NEW LANE CONTROLLER IN SAME LOCATION AS EXISTING LANE CONTROLLERS.
2. ALL CONDUIT IN GRAVEL BELOW CONCRETE SHALL BE 1½ SCHEDULE 80 PVC.
3. ALL EXPOSED CONDUIT SHALL BE 1½ GALVANIZED RIGID MENTAL CONDUIT.
4. EXISTING CONDUIT IN ISLANDS SHALL BE USED FOR HOME RUNS TO BOOTH PIT.
5. EXITING LANE SENSORS ARE TO BE INSATLLED BY OTHERS AT A LATER DATE.
6. THE CONTRACTOR SHALL SUBMIT A PLAN DETAILING HOW ALL CONDUITS SHALL LEAD TO THE NEW LANE CONTROLLER CABINET. EXISTING WIREWAYS AND CONDUITS SHALL BE USED WHERE POSSIBLE.
7. NEW CASH OUT WORK STATION TO BE INSTALLED IN THE TOLL BUILDING (BY OTHERS)

Scale: 5 0 5 10

No.	Revision	By	Date

Designed by: HNTB

CONSULTANT PROJECT MANAGER: R. Bruce Munger, P.E.

	By	Date		By	Date
Designed	WA	08/15	Checked	WA	08/15
Drawn	CNP	08/15	In Charge of	RAL	08/15

HNTB CORPORATION
340 County Road, Suite 6-C
Westbrook, ME 04092
TEL (207) 774-5155
FAX (207) 228-0909

MAINE TURNPIKE

THE GOLD STAR MEMORIAL HIGHWAY

MTA PROJECT MANAGER: William Yates

INTERCHANGES 32, 36, & 46 NB TOLL SYSTEM UPGRADES

INTERCHANGE 32 PROPOSED ELECTRICAL PLAN

SHEET NUMBER: EM-04

CONTRACT:2015.12

Date:9/5/2015

Filename: 102_Exit32_ElectricalPlan.dgn

Date:9/5/2015

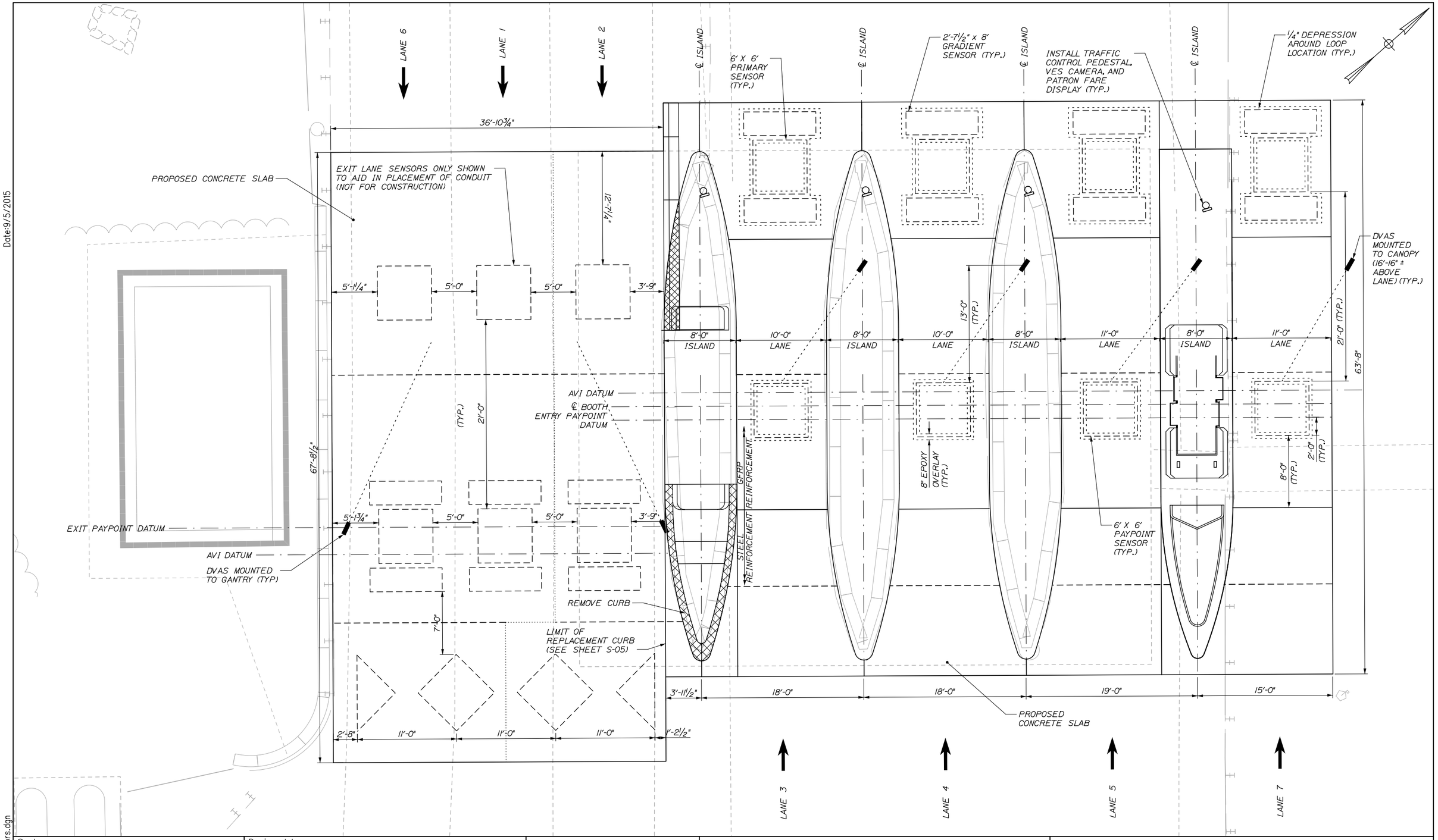

Filename: 103_Exit32_Sensors.dgn

Scale: 5 0 5 10

No.	Revision	By	Date

Designed by: HNTB

CONSULTANT PROJECT MANAGER: R. Bruce Munger, P.E.

	By	Date		By	Date
Designed	WA	08/15	Checked	WA	08/15
Drawn	CNP	08/15	In Charge of	RAL	08/15

HNTB CORPORATION
340 County Road, Suite 6-C
Westbrook, ME 04092
TEL (207) 774-5155
FAX (207) 228-0909

MAINE TURNPIKE

THE GOLD STAR MEMORIAL HIGHWAY

MTA PROJECT MANAGER: William Yates

INTERCHANGES 32, 36, & 46 NB TOLL SYSTEM UPGRADES

INTERCHANGE 32 SENSOR LAYOUT PLAN

SHEET NUMBER: EM-05

CONTRACT:2015.12

Date:9/5/2015

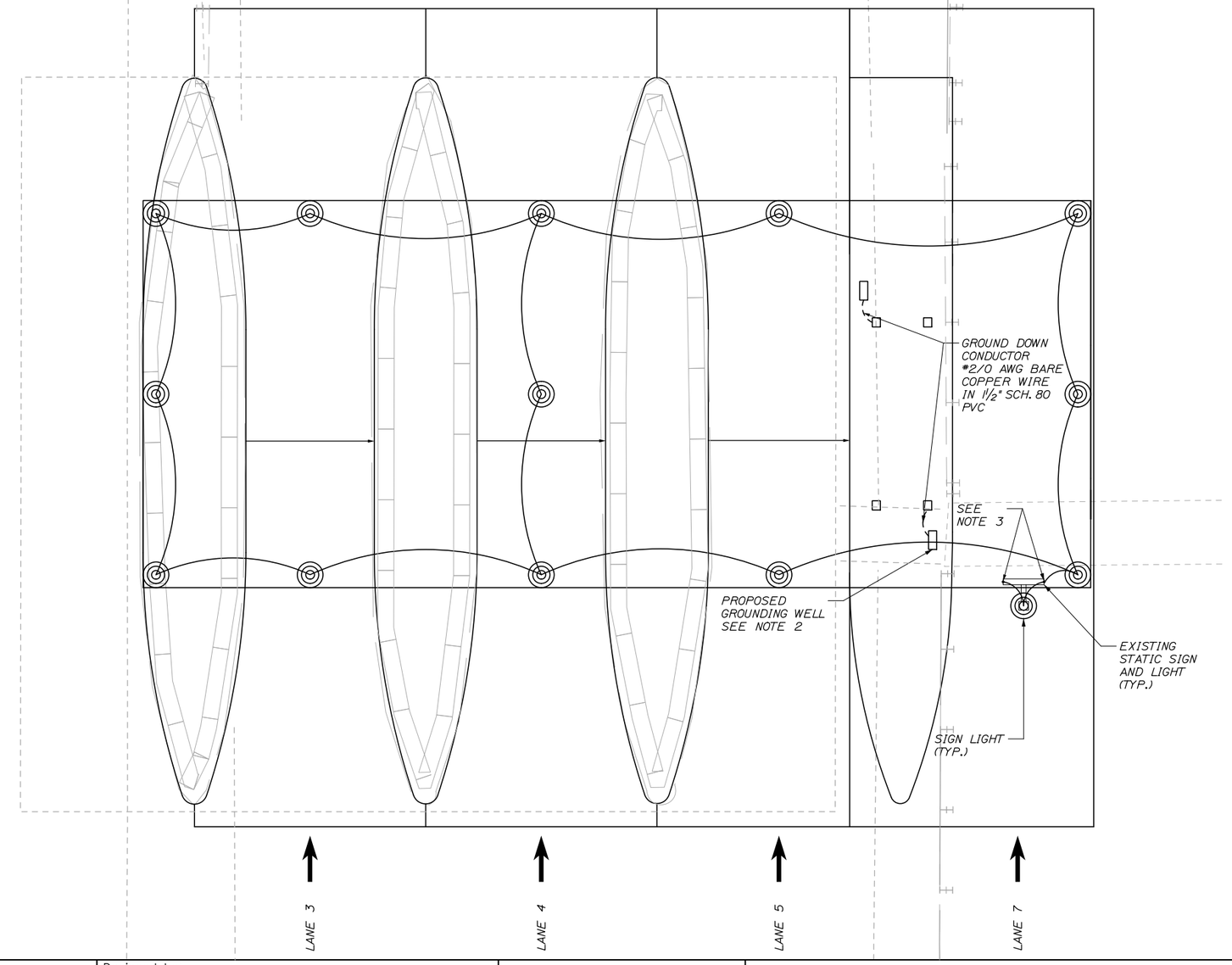

LIGHTNING SUPPRESSION ON CANOPY NOTES:

1. GROUNDING WELLS SHALL BE INSTALLED IN THE APPROACH AND DEPARTURE SIDES OF THE WALKWAY PORTION OF THE ISLAND FOR LANE 7. THE PATH OF THE NEW GROUND DOWN CONNECTOR SHALL BE AS SHOWN AT THE ISLAND FOR LANE 7, AND SHALL BE ATTACHED TO THE PROPOSED SUPPORT COLUMNS (SEE SHEET S-11).

2. THE GROUNDING WELLS SHALL CONSIST OF A 17"X10.125"X16.25", TRI5 QUAZITE JUNCTION BOX WITH A SINGLE ¾"X10' COPPER CLAD STEEL GROUNDING ROD UL 467 COMPLIANT CENTERED WITHIN THE WELL.

3. BOND EACH SIGN MOUNTING FRAME MEMBER WITH #2/0 AWG BARE COPPER WIRE (TYP).

4. ALL LIGHTNING PROTECTION WORK SHALL BE PROVIDED IN FULL CONFORMANCE WITH UL 96A AND WITH NFPA 780.

6. LIGHTNING PROTECTION CONDUCTOR BENDS SHALL NOT FORM AN INCLUDED ANGLE LESS THAN 90 DEGREES OR HAVE A RADIUS BEND LESS THAN 8".

7. LIGHTNING PROTECTION AIR TERMINALS TO BE INSTALLED ON THE EXISTING CANOPY SIGN LIGHTING FIXTURES SHALL BE 10 INCHES TALL. LIGHTNING PROTECTION AIR TERMINALS TO BE INSTALLED ON THE EXISTING CANOPY ROOF SHALL BE 24 INCHES TALL.

8. A ROOF PENETRATION TO ACCOMMODATE A 1½" CONDUIT IS REQUIRED FOR GROUNDING DOWN PROPOSED LANE 7 CONDUCTOR. THE REPAIR OF THE ROOF SHALL BE INCIDENTAL TO THE LIGHTNING SUPPRESSION SYSTEM.

9. NEW LIGHTNING SUPPRESSION SYSTEM TO BE INSTALLED ON EXISTING CANOPY.

Filename: 104_Exit32_Lightning Suppression.dgn

Scale: 5 0 5 10

No.	Revision	By	Date

Designed by: HNTB

CONSULTANT PROJECT MANAGER: R. Bruce Munger, P.E.

	By	Date		By	Date
Designed	RBM	08/15	Checked	RBM	08/15
Drawn	PMK	08/15	In Charge of	RAL	08/15

HNTB CORPORATION
340 County Road, Suite 6-C
Westbrook, ME 04092
TEL (207) 774-5155
FAX (207) 228-0909

MAINE TURNPIKE

THE GOLD STAR MEMORIAL HIGHWAY

MTA PROJECT MANAGER: William Yates

INTERCHANGES 32, 36, & 46 NB TOLL SYSTEM UPGRADES

INTERCHANGE 32 LIGHTNING SUPPRESSION PLAN

SHEET NUMBER: EM-06

CONTRACT:2015.12

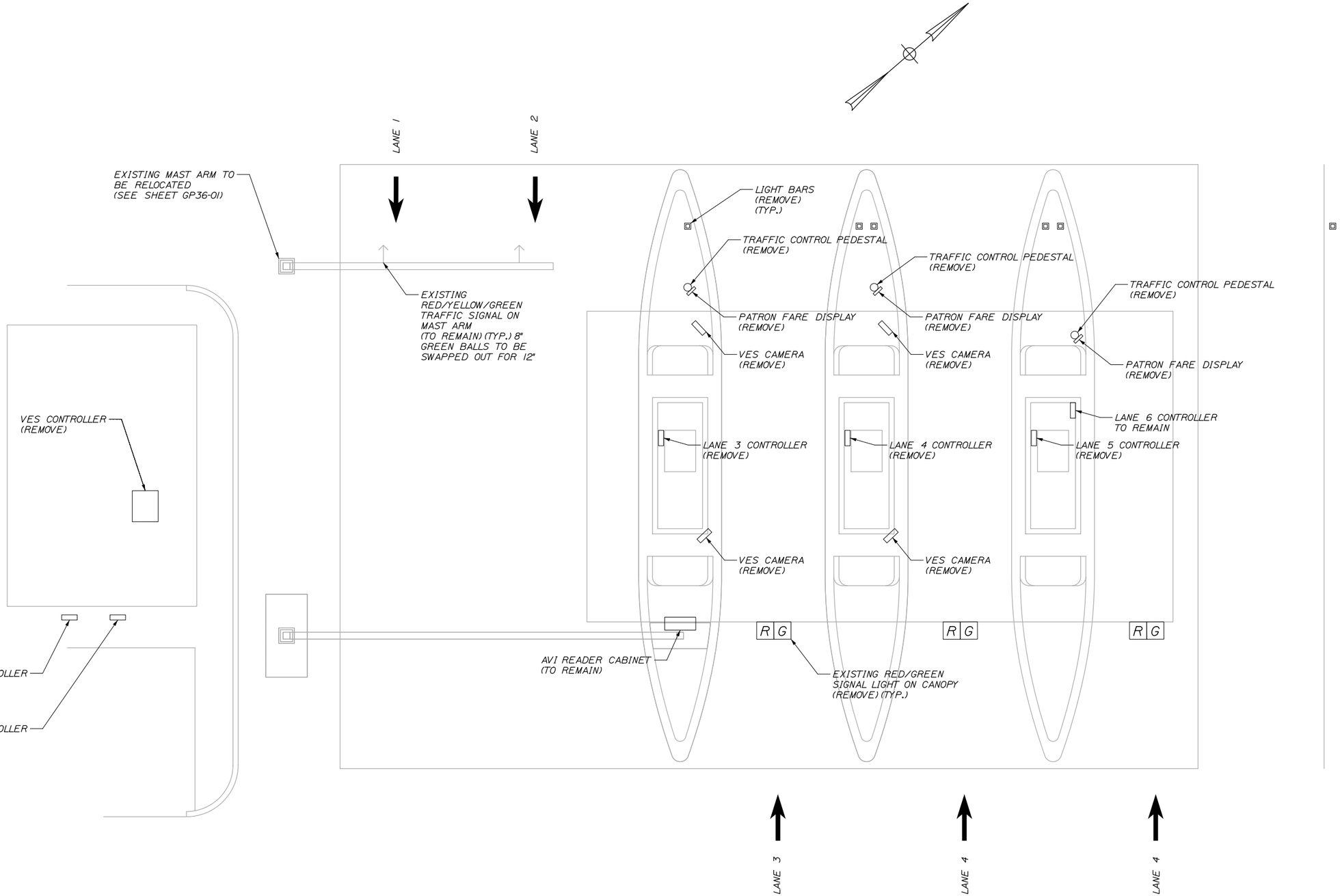

Date:9/5/2015

Filename: 105_Exit36-ElecExist.dgn

Scale: 5 0 5 10

No.	Revision	By	Date

Designed by: HNTB

CONSULTANT PROJECT MANAGER: R. Bruce Munger, P.E.

	By	Date		By	Date
Designed	WA	08/15	Checked	WA	08/15
Drawn	CNP	08/15	In Charge of	RAL	08/15

HNTB CORPORATION
340 County Road, Suite 6-C
Westbrook, ME 04092
TEL (207) 774-5155
FAX (207) 228-0909

MAINE TURNPIKE

THE GOLD STAR MEMORIAL HIGHWAY

MTA PROJECT MANAGER: William Yates

INTERCHANGES 32, 36, & 46 NB TOLL SYSTEM UPGRADES

INTERCHANGE 36 EXISTING ELECTRICAL PLAN

SHEET NUMBER: EM-07

CONTRACT:2015.12

Date:9/5/2015

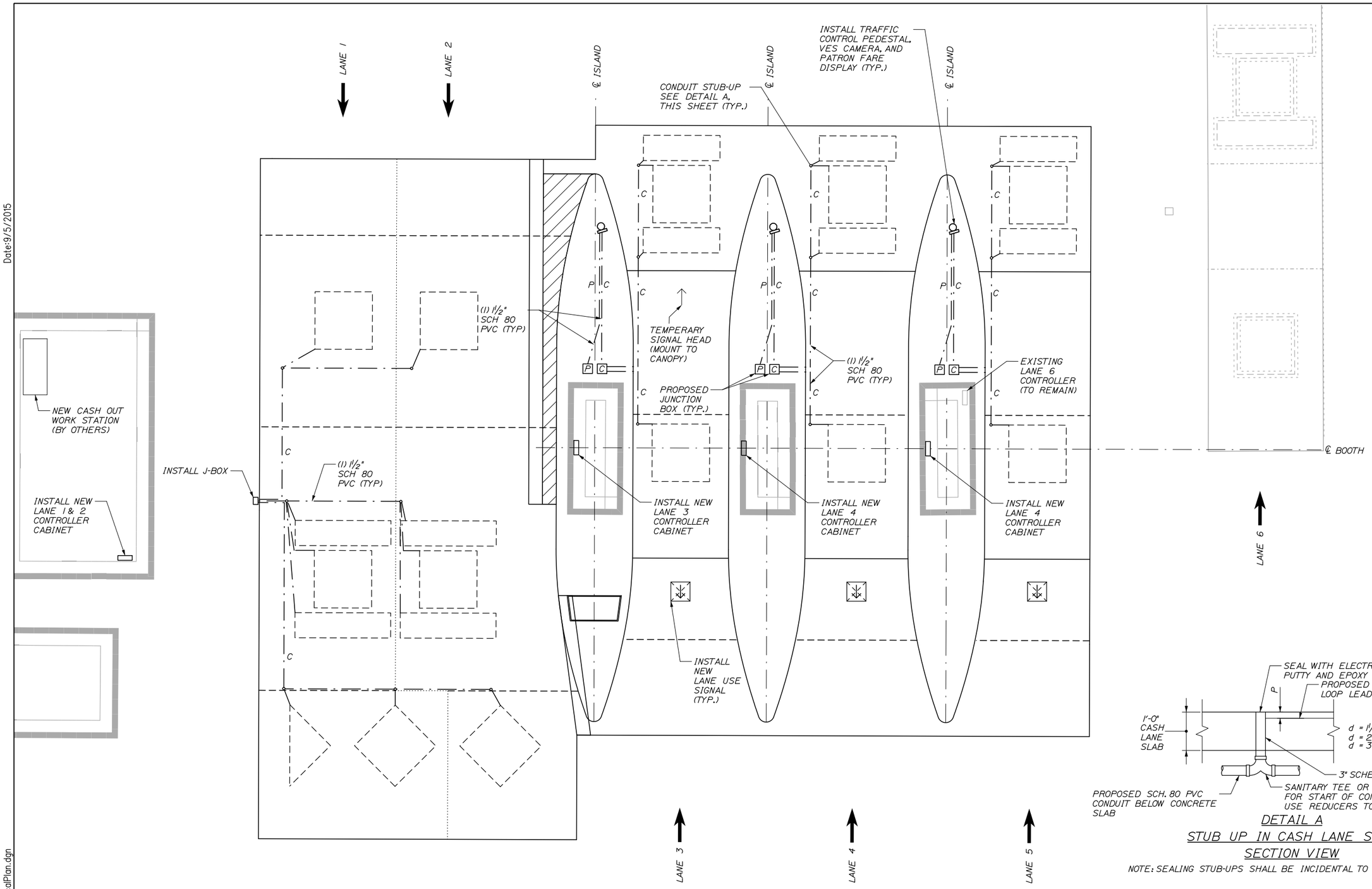

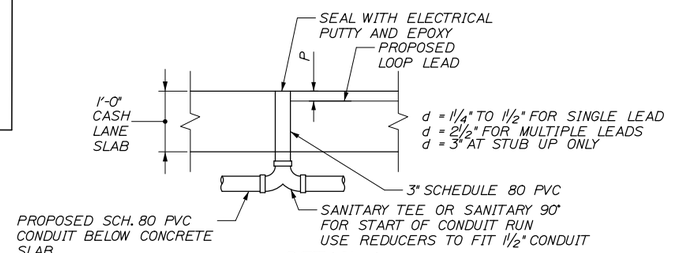

DETAIL A
STUB UP IN CASH LANE SLAB
SECTION VIEW

NOTE: SEALING STUB-UPS SHALL BE INCIDENTAL TO THE PVC PAY ITEM.

Filename: 106_Exit36-ElectricalPlan.dgn

Scale: 5 0 5 10

No.	Revision	By	Date

Designed by: HNTB

CONSULTANT PROJECT MANAGER: R. Bruce Munger, P.E.

	By	Date		By	Date
Designed	WA	08/15	Checked	WA	08/15
Drawn	CNP	08/15	In Charge of	RAL	08/15

HNTB CORPORATION
340 County Road, Suite 6-C
Westbrook, ME 04092
TEL (207) 774-5155
FAX (207) 228-0909

MAINE TURNPIKE

THE GOLD STAR MEMORIAL HIGHWAY

MTA PROJECT MANAGER: William Yates

INTERCHANGES 32, 36, & 46 NB TOLL SYSTEM UPGRADES

INTERCHANGE 36 PROPOSED ELECTRICAL PLAN

SHEET NUMBER: EM-08

CONTRACT:2015.12

Date:9/5/2015

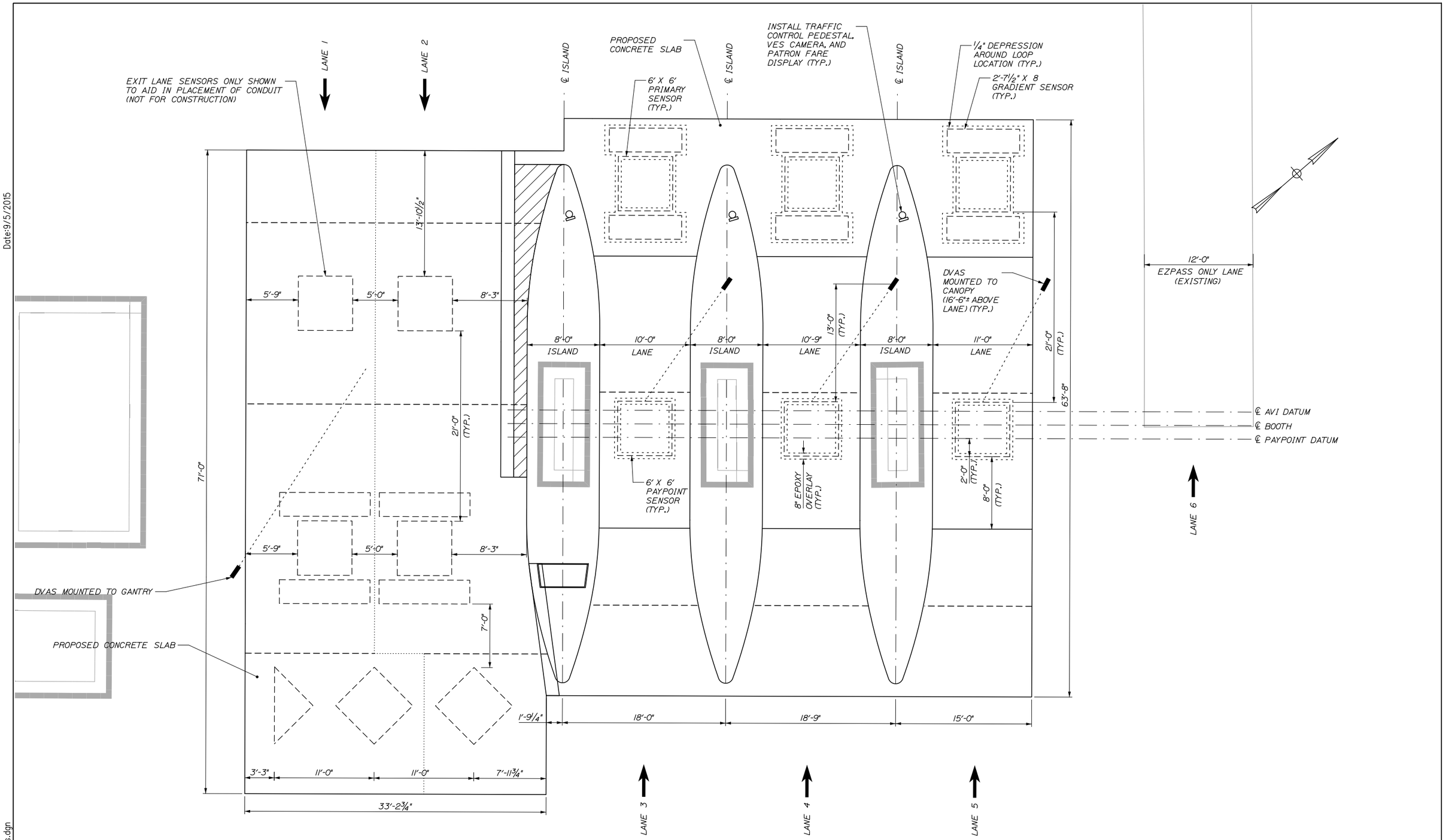

Filename: 107_Exit36-Sensors.dgn

Scale: 5 0 5 10

No.	Revision	By	Date

Designed by: HNTB

CONSULTANT PROJECT MANAGER: R. Bruce Munger, P.E.

	By	Date		By	Date
Designed	WA	08/15	Checked	WA	08/15
Drawn	CNP	08/15	In Charge of	RAL	08/15

HNTB CORPORATION
340 County Road, Suite 6-C
Westbrook, ME 04092
TEL (207) 774-5155
FAX (207) 228-0909

MAINE TURNPIKE

THE GOLD STAR MEMORIAL HIGHWAY

MTA PROJECT MANAGER: William Yates

INTERCHANGES 32, 36, & 46 NB TOLL SYSTEM UPGRADES

INTERCHANGE 36 SENSOR LAYOUT PLAN

SHEET NUMBER: EM-09

CONTRACT:2015.12

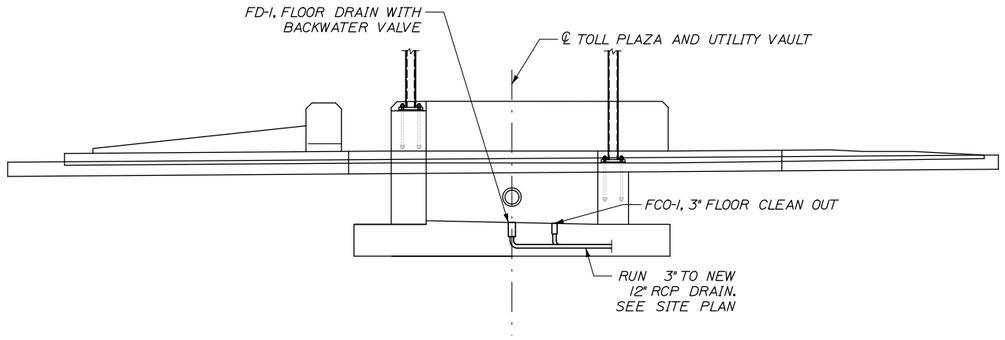

ISLAND ELEVATION

3/16" = 1'-0"

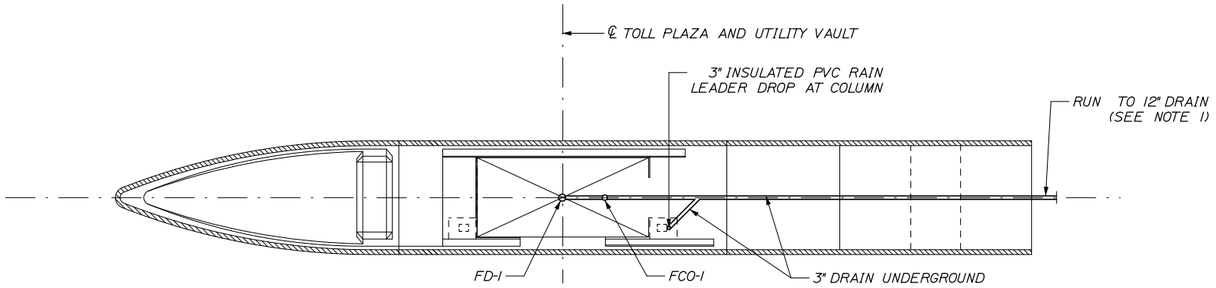

ISLAND PLAN

3/16" = 1'-0"

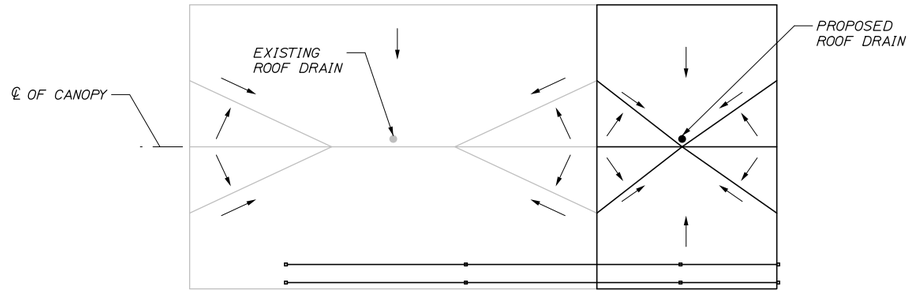

CANOPY ROOF PLAN

NTS

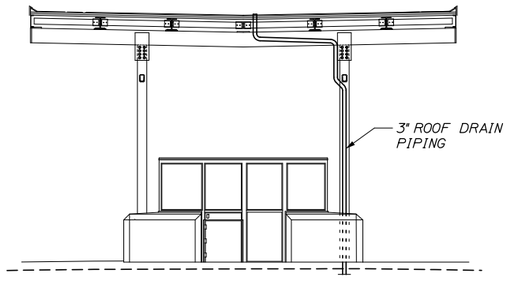

BOOTH AND CANOPY ELEVATION

3/16" = 1'-0"

NOTES:

1. CONNECT 3" PIT DRAIN TO 12" RCP STORM DRAIN WITH INSERTA TEE OR APPROVED EQUAL. PAYMENT SHALL BE INCIDENTAL TO 3" DRAIN PIPE.

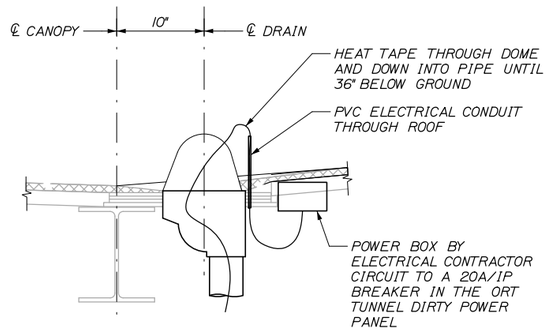

SECTION A - A

NTS

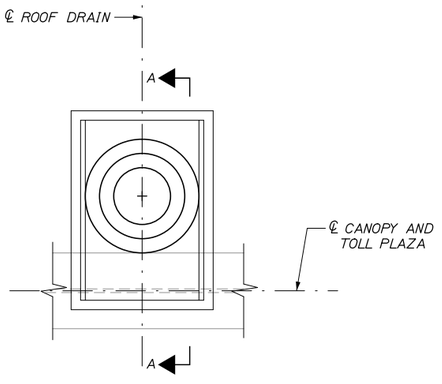

ROOF DRAIN PLAN

NTS

Date:9/5/2015

Filename: 108_CanopyBooth-ElecMech.dgn

Scale:			
No.	Revision	By	Date

Designed by: HNTB

CONSULTANT PROJECT MANAGER: R. Bruce Munger, P.E.

	By	Date		By	Date
Designed	RBM	08/15	Checked	RBM	08/15
Drawn	PMK	08/15	In Charge of	RAL	08/15

HNTB CORPORATION
340 County Road, Suite 6-C
Westbrook, ME 04092
TEL (207) 774-5155
FAX (207) 228-0909

MAINE TURNPIKE

THE GOLD STAR MEMORIAL HIGHWAY

MTA PROJECT MANAGER: William Yates

INTERCHANGES 32, 36, & 46 NB TOLL SYSTEM UPGRADES

INTERCHANGE 46 NB MECHANICAL & ELECTRICAL BOOTH & CANOPY DETAIL

SHEET NUMBER: EM-10

CONTRACT:2015.12

Date:9/5/2015

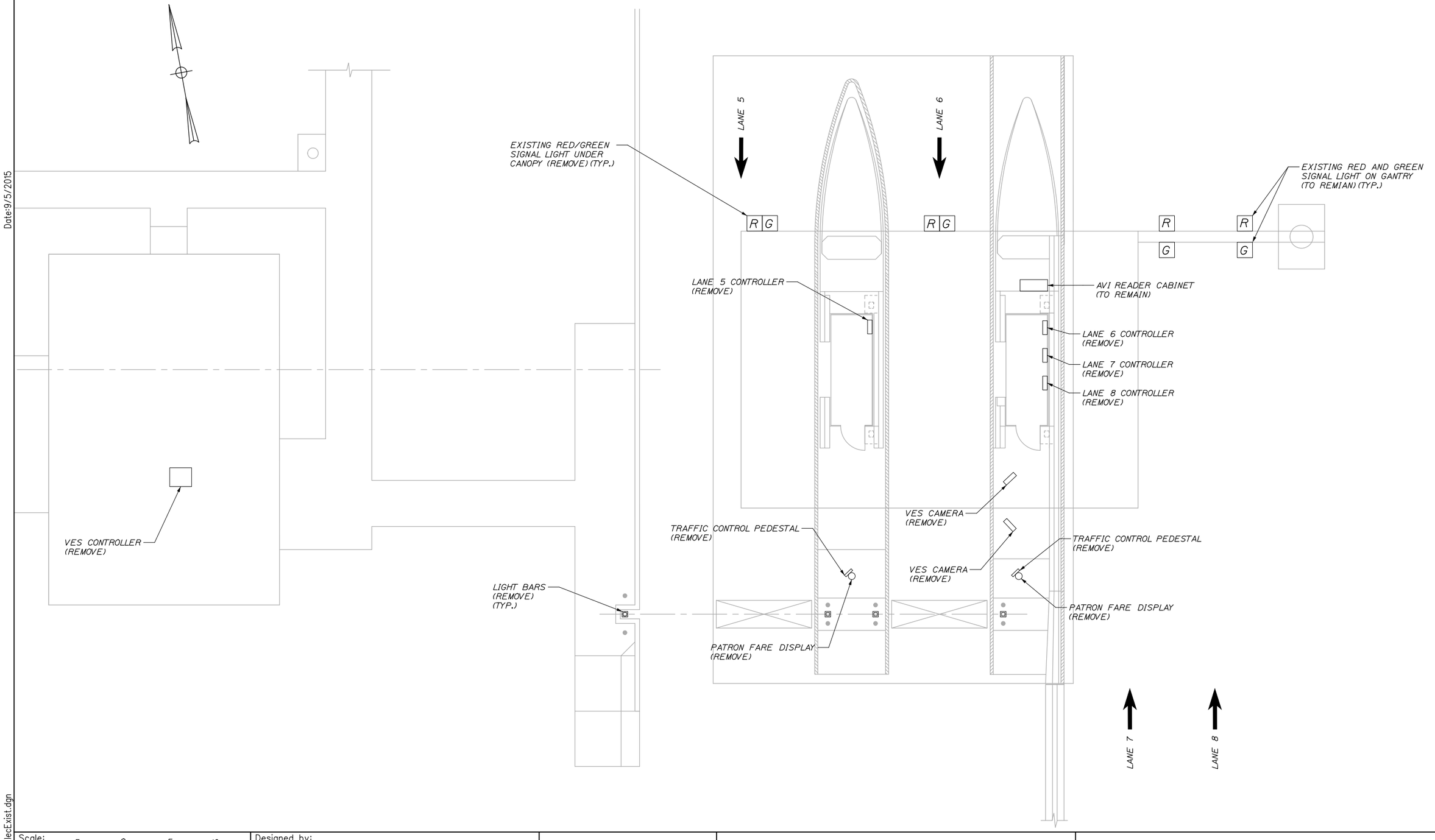

Filename: 109_Exit46 NB-ElecExist.dgn

Scale: 5 0 5 10

No.	Revision	By	Date

Designed by: HNTB

CONSULTANT PROJECT MANAGER: R. Bruce Munger, P.E.

	By	Date		By	Date
Designed	WA	08/15	Checked	WA	08/15
Drawn	CNP	08/15	In Charge of	RAL	08/15

HNTB CORPORATION
340 County Road, Suite 6-C
Westbrook, ME 04092
TEL (207) 774-5155
FAX (207) 228-0909

MAINE TURNPIKE

THE GOLD STAR MEMORIAL HIGHWAY

MTA PROJECT MANAGER: William Yates

INTERCHANGES 32, 36, & 46 NB TOLL SYSTEM UPGRADES

INTERCHANGE 46 NB EXISTING ELECTRICAL PLAN

SHEET NUMBER: EM-11

CONTRACT:2015.12

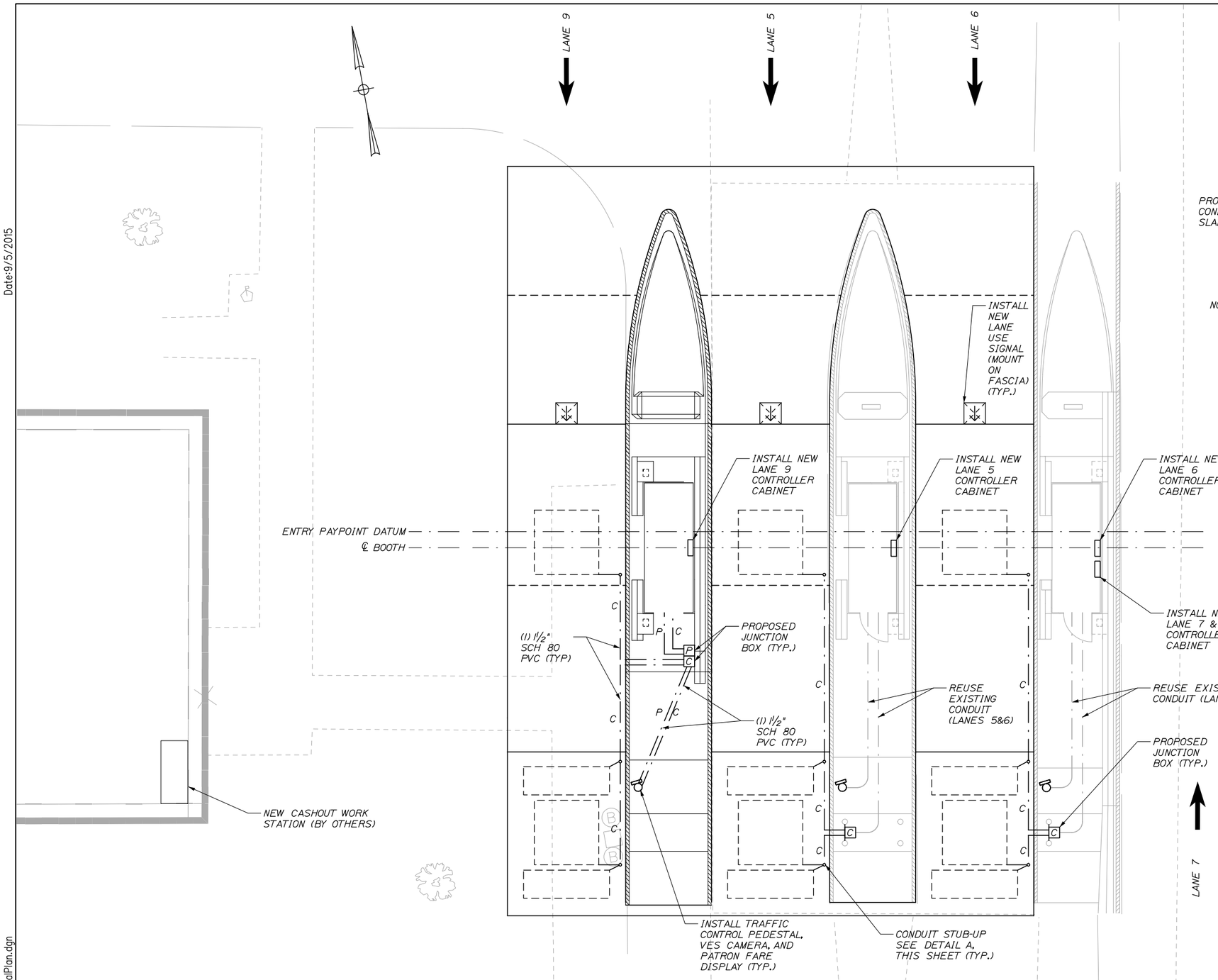

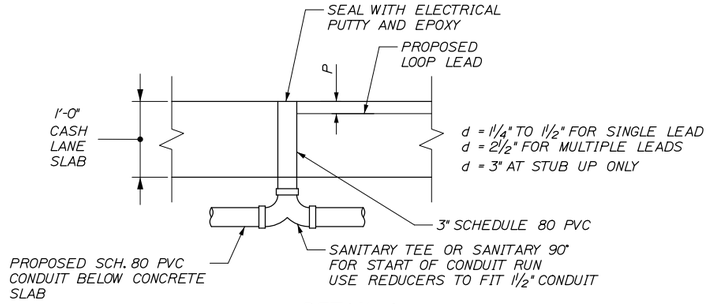

DETAIL A
STUB UP IN CASH LANE SLAB
SECTION VIEW

NOTE: SEALING STUB-UPS SHALL BE INCIDENTAL TO THE PVC PAY ITEM.

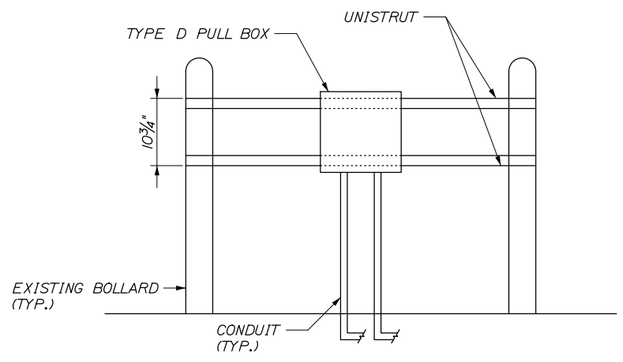

DETAIL B
UNI-STRUT DETIAL
SCALE: NTS

NOTES:

1. INSTALL NEW LANE CONTROLLER IN SAME LOCATION AS EXISTING LANE CONTROLLERS.
2. ALL CONDUIT IN GRAVEL BELOW CONCRETE SHALL BE 1½" SCHEDULE 80 PVC.
3. ALL EXPOSED CONDUIT SHALL BE 1½" GALVANIZED RIGID METAL CONDUIT.
4. EXISTING CONDUIT IN ISLANDS SHALL BE USED FOR HOME RUNS TO BOOTH PIT.
5. THE CONTRACTOR SHALL SUBMIT A PLAN DETAILING HOW ALL CONDUITS SHALL LEAD TO THE NEW LANE CONTROLLER CABINET. EXISTING WIREWAYS AND CONDUITS SHALL BE USED WHERE POSSIBLE.
6. EXISTING FASCIA MOUNTED CANOPY SIGNS SHALL BE REMOVED. EXISTING STATIC CANOPY SIGNS SHALL BE REINSTALLED ON TOP OF THE CANOPY. ALL OTHER EXISTING CANOPY SIGNS SHALL BE REPLACED WITH NEW STATIC CANOPY SIGNS MOUNTED ON TOP OF THE CANOPY. SEE SHEET S-36 FOR DETAILS
7. PROPOSED LANE 9 ISLAND TO BE CONSTRUCTED OVER EXISTING 12" PVC CONDUIT. EXISTING CONDUIT SHALL BE REMOVED WITHIN PROPOSED LANE 9 UTILITY VAULT.

Date:9/5/2015

Filename: 110_Exit46 NB-ElectricalPlan.dgn

Scale: 5 0 5 10

No.	Revision	By	Date

Designed by: HNTB

CONSULTANT PROJECT MANAGER: R. Bruce Munger, P.E.

	By	Date		By	Date
Designed	WA	08/15	Checked	WA	08/15
Drawn	CNP	08/15	In Charge of	RAL	08/15

HNTB CORPORATION
340 County Road, Suite 6-C
Westbrook, ME 04092
TEL (207) 774-5155
FAX (207) 228-0909

MAINE TURNPIKE

THE GOLD STAR MEMORIAL HIGHWAY

MTA PROJECT MANAGER: William Yates

INTERCHANGES 32, 36, & 46 NB TOLL SYSTEM UPGRADES

INTERCHANGE 46 NB PROPOSED ELECTRICAL PLAN

SHEET NUMBER: EM-12

CONTRACT:2015.12

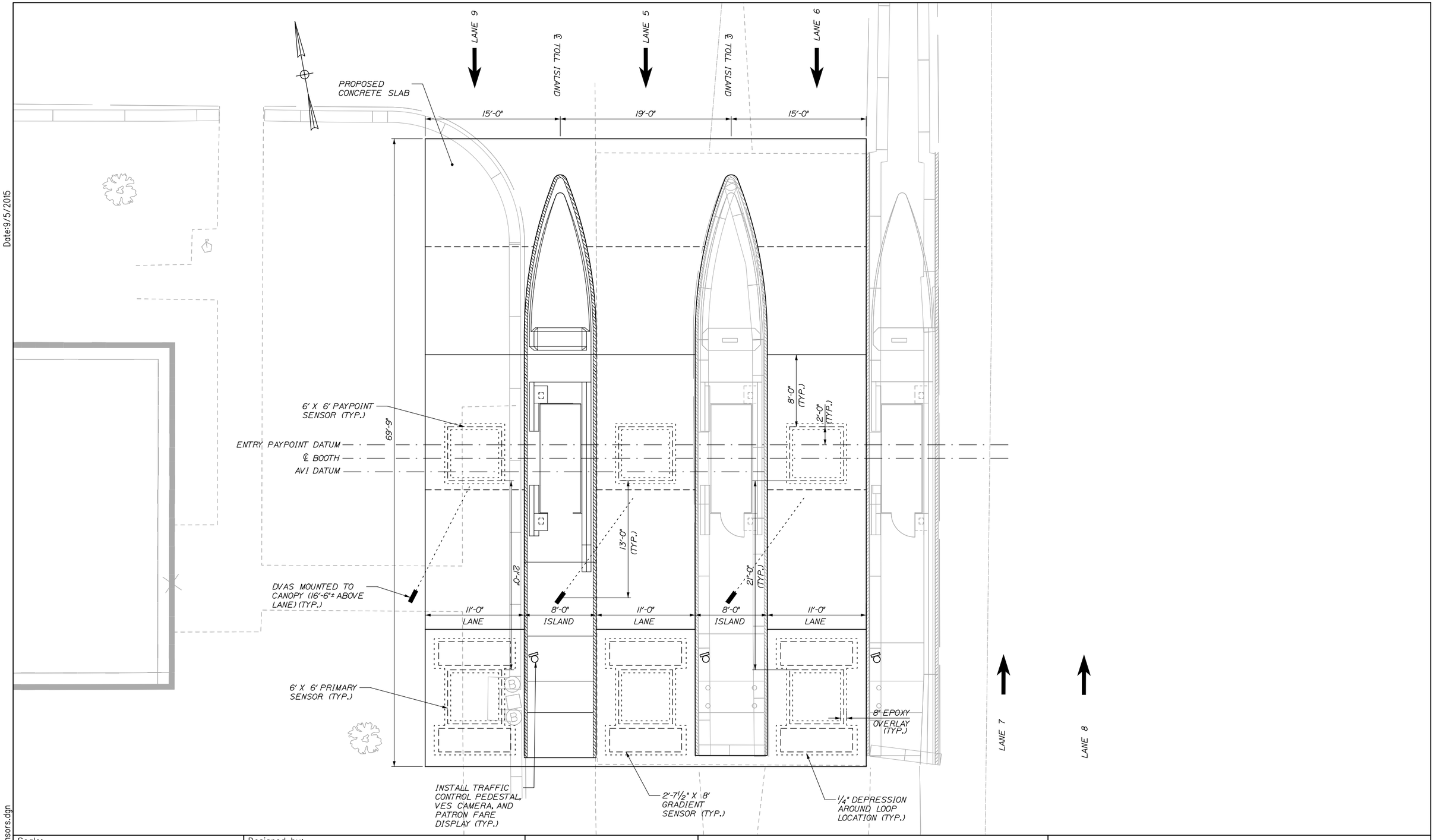

Date:9/5/2015

Filename: 111_Exit46 NB-Sensors.dgn

Scale: 5 0 5 10

No.	Revision	By	Date

Designed by: HNTB

CONSULTANT PROJECT MANAGER: R. Bruce Munger, P.E.

	By	Date		By	Date
Designed	WA	08/15	Checked	WA	08/15
Drawn	CNP	08/15	In Charge of	RAL	08/15

HNTB CORPORATION
340 County Road, Suite 6-C
Westbrook, ME 04092
TEL (207) 774-5155
FAX (207) 228-0909

MAINE TURNPIKE

THE GOLD STAR MEMORIAL HIGHWAY

MTA PROJECT MANAGER: William Yates

INTERCHANGES 32, 36, & 46 NB TOLL SYSTEM UPGRADES

INTERCHANGE 46 NB SENSOR LAYOUT PLAN

SHEET NUMBER: EM-13

CONTRACT:2015.12

Date:9/5/2015

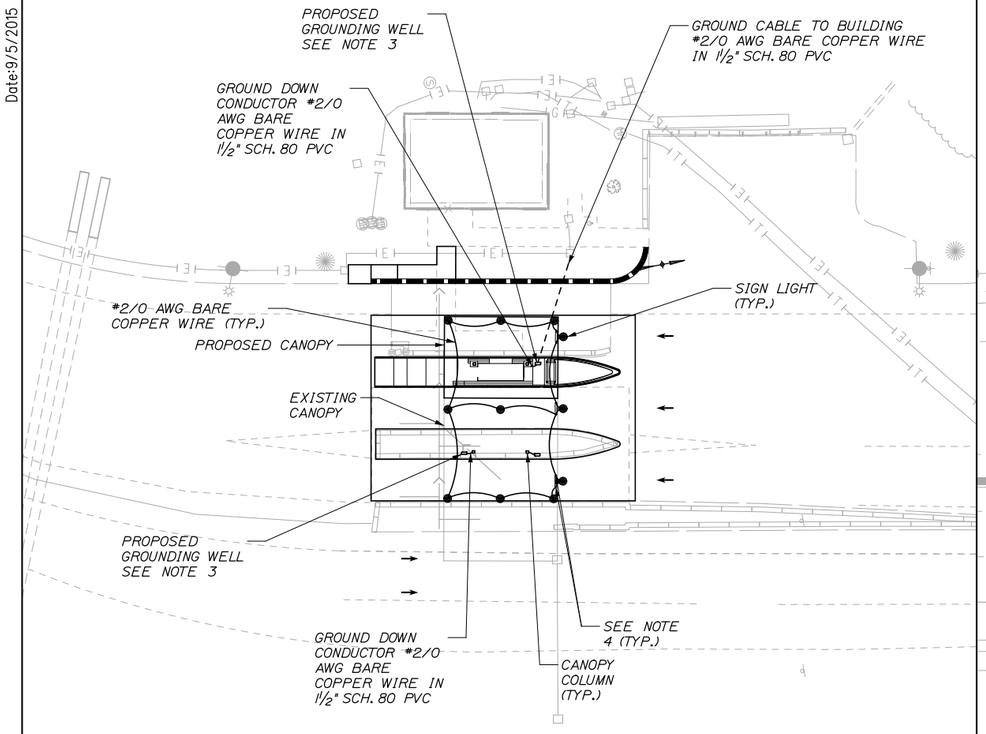

NORTHBOUND

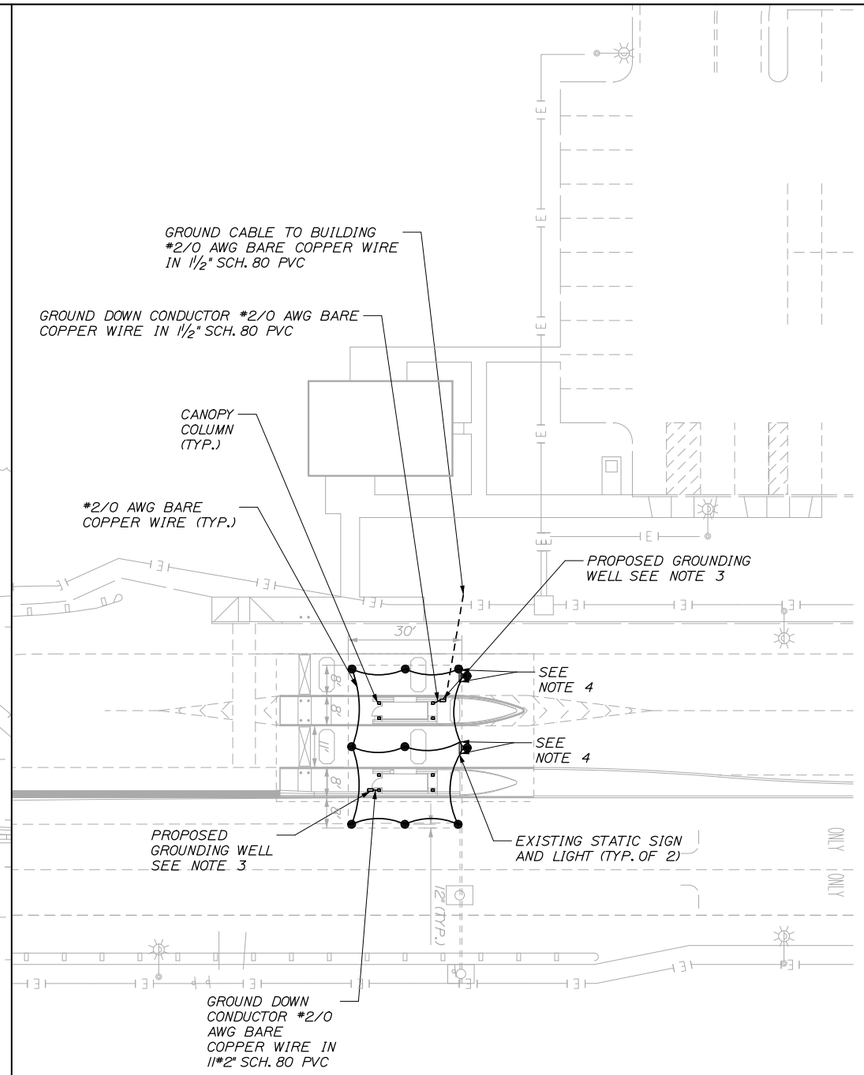

SOUTHBOUND

LIGHTNING SUPPRESSION ON CANOPY NOTES:

1. A NEW GROUNDING WELL SHALL BE INSTALLED IN THE ISLANDS.

2. GROUNDING WELLS SHALL BE INSTALLED IN THE APPROACH SIDE WALKWAY PORTION OF ISLANDS. THE NEW GROUND DOWN CONNECTOR SHALL BE ATTACHED TO THE SUPPORT COLUMNS.

3. THE GROUNDING WELLS SHALL CONSIST OF A 12"X8"X18". TRI5 QUAZITE JUNCTION BOX WITH A SINGLE ¾"X10' COPPER CLAD STEEL GROUNDING ROD UL 467 COMPLIANT CENTERED WITHIN THE WELL.

4. BOND EACH SIGN MOUNTING FRAME MEMBER WITH #2/0 AWG BARE COPPER WIRE (TYP).

5. ALL LIGHTNING PROTECTION WORK SHALL BE PROVIDED IN FULL CONFORMANCE WITH UL 96A AND WITH NFPA 780.

6. LIGHTNING PROTECTION CONDUCTOR BENDS SHALL NOT FORM AN INCLUDED ANGLE LESS THAN 90 DEGREES OR HAVE A RADIUS BEND LESS THAN 8".

7. LIGHTNING PROTECTION AIR TERMINALS TO BE INSTALLED ON THE EXISTING CANOPY SIGN LIGHTING FIXTURES SHALL BE 10 INCHES TALL. LIGHTNING PROTECTION AIR TERMINALS TO BE INSTALLED ON THE EXISTING CANOPY ROOF SHALL BE 24 INCHES TALL.

8. A ROOF PENETRATION TO ACCOMIDATE A 1½" CONDUIT IS REQUIRED FOR PROPOSED GROUNDING DOWN CONDUCTORS. THE REPAIR OF THE ROOF SHALL BE INCIDENTAL TO THE LIGHTNING SUPPRESION SYSTEM. THE ROOF SHALL BE REQUIRED BY THE ROOFING SUBCONTRACTOR OR AS DIRECTED BY THE RESIDENT.

9. REMOVE AND REPLACE EXISTING LIGHTNING SUPRESSION SYSTEM (NOT SHOWN FOR CLARITY) FOR BOTH NB AND SB PLAZAS.

Filename: 112_Exit46_Lightning Suppression.dgn

Scale: 20 0 20 40
Scale of Feet

No.	Revision	By	Date

Designed by: HNTB

CONSULTANT PROJECT MANAGER: R. Bruce Munger, P.E.

	By	Date		By	Date
Designed	WA	08/15	Checked	WA	08/15
Drawn	CNP	08/15	In Charge of	RAL	08/15

HNTB CORPORATION
340 County Road, Suite 6-C
Westbrook, ME 04092
TEL (207) 774-5155
FAX (207) 228-0909

MAINE TURNPIKE

THE GOLD STAR MEMORIAL HIGHWAY

MTA PROJECT MANAGER: William Yates

INTERCHANGES 32, 36, & 46 NB TOLL SYSTEM UPGRADES

INTERCHANGE 46 NB AND SB LIGHTNING SUPPRESSION PLAN

SHEET NUMBER: EM-14

CONTRACT:2015.12

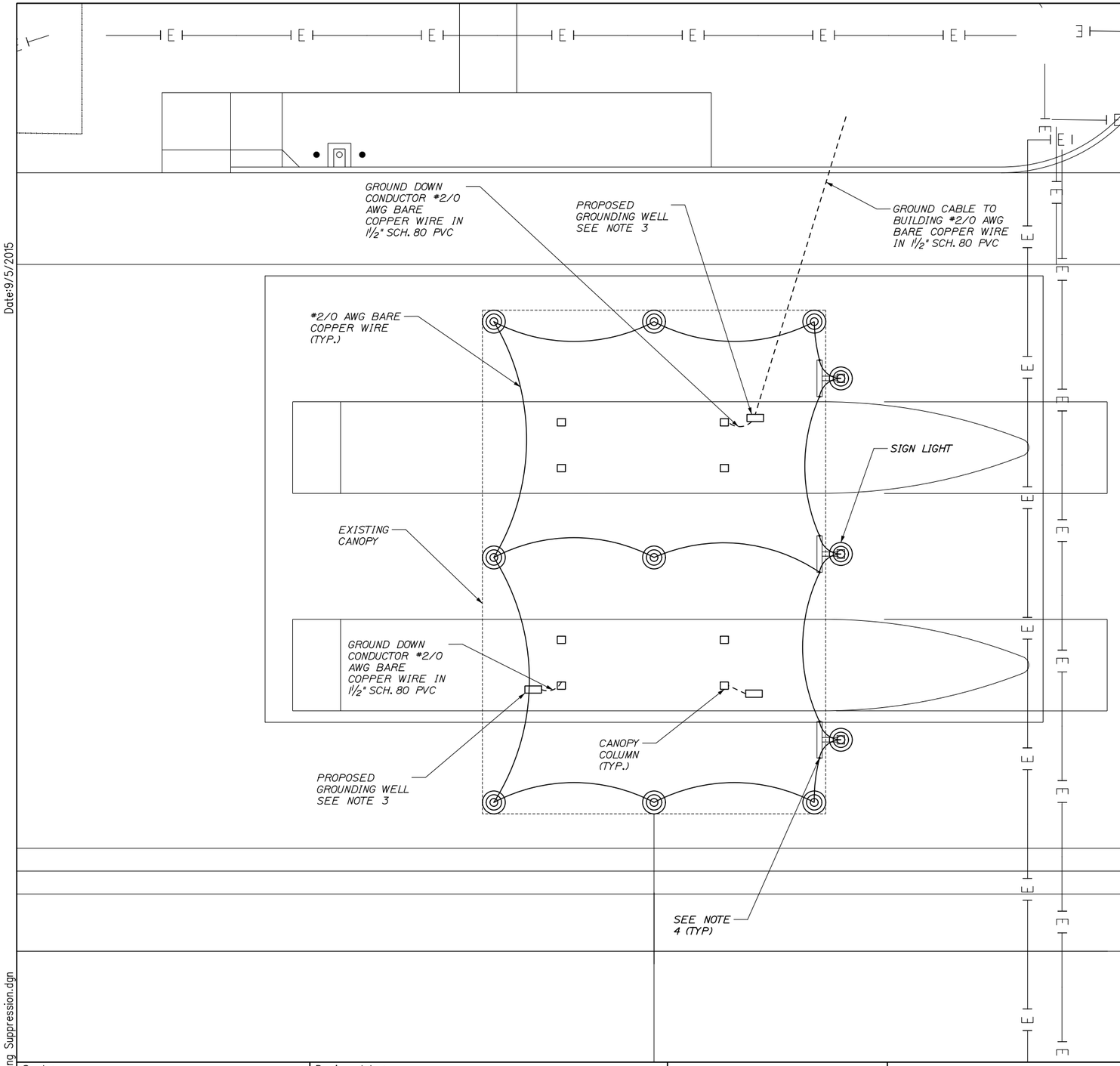

LIGHTNING SUPPRESSION ON CANOPY NOTES:

1. A NEW GROUNDING WELL SHALL BE INSTALLED IN THE ISLANDS.

2. GROUNDING WELLS SHALL BE INSTALLED IN THE APPROACH SIDE WALKWAY PORTION OF ISLANDS. THE NEW GROUND DOWN CONNECTOR SHALL BE ATTACHED TO THE SUPPORT COLUMNS.

3. THE GROUNDING WELLS SHALL CONSIST OF A 12"X8"X18". TRI5 QUAZITE JUNCTION BOX WITH A SINGLE ¾"X10' COPPER CLAD STEEL GROUNDING ROD UL 467 COMPLIANT CENTERED WITHIN THE WELL.

4. BOND EACH SIGN MOUNTING FRAME MEMBER WITH #2/0 AWG BARE COPPER WIRE (TYP).

5. ALL LIGHTNING PROTECTION WORK SHALL BE PROVIDED IN FULL CONFORMANCE WITH UL 96A AND WITH NFPA 780.

6. LIGHTNING PROTECTION CONDUCTOR BENDS SHALL NOT FORM AN INCLUDED ANGLE LESS THAN 90 DEGREES OR HAVE A RADIUS BEND LESS THAN 8".

7. LIGHTNING PROTECTION AIR TERMINALS TO BE INSTALLED ON THE EXISTING CANOPY SIGN LIGHTING FIXTURES SHALL BE 10 INCHES TALL. LIGHTNING PROTECTION AIR TERMINALS TO BE INSTALLED ON THE EXISTING CANOPY ROOF SHALL BE 24 INCHES TALL.

8. A ROOF PENETRATION TO ACCOMIDATE A 1½" CONDUIT IS REQUIRED FOR PROPOSED GROUNDING DOWN CONDUCTORS. THE REPAIR OF THE ROOF SHALL BE INCIDENTAL TO THE LIGHTNING SUPPRESION SYSTEM. THE ROOF SHALL BE REQUIRED BY THE ROOFING SUBCONTRACTOR OR AS DIRECTED BY THE RESIDENT.

9. REMOVE AND REPLACE EXISTING LIGHTNING SUPRESSION SYSTEM (NOT SHOWN FOR CLARITY) FOR BOTH NB AND SB PLAZAS.

Date:9/5/2015

Filename: 113_Exit47_Lightning Suppression.dgn

Scale: 10 0 10 20
Scale of Feet

No.	Revision	By	Date

Designed by: HNTB

CONSULTANT PROJECT MANAGER: R. Bruce Munge, P.E.

	By	Date		By	Date
Designed	PDB	08/15	Checked	CDH	08/15
Drawn	PDB	08/15	In Charge of	RAL	08/15

HNTB CORPORATION
340 County Road, Suite 6-C
Westbrook, ME 04092
TEL (207) 774-5155
FAX (207) 228-0909

MAINE TURNPIKE

THE GOLD STAR MEMORIAL HIGHWAY

MTA PROJECT MANAGER: William Yates

INTERCHANGE 32, 36, & 46 NB TOLL SYSTEM UPGRADES

INTERCHANGE 47 LIGHTNING SUPPRESSION PLAN

SHEET NUMBER: EM-15

CONTRACT:2015.12

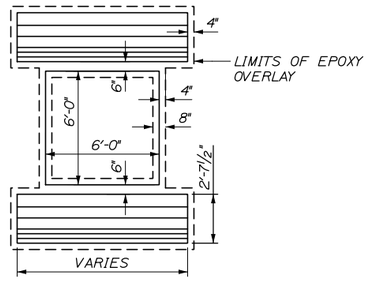

LOOP DETAIL AND EPOXY OVERLAY

N.T.S.

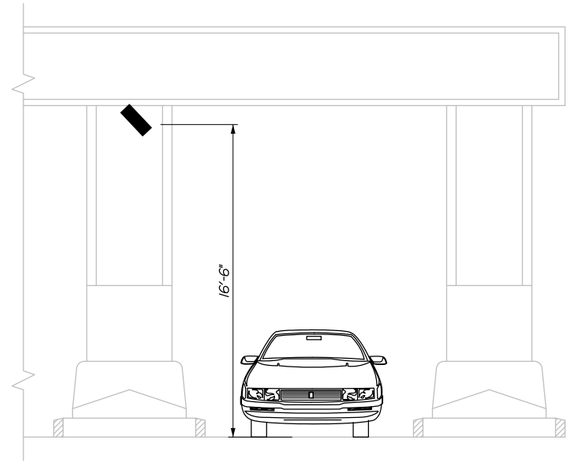

SECTION VIEW

N.T.S.

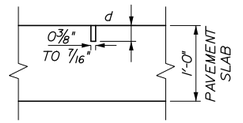

d = 1¼" TO 1½" FOR SINGLE LEAD CUT
2½" FOR MULTIPLE LEAD CUT

LEAD-IN CUT

N.T.S.

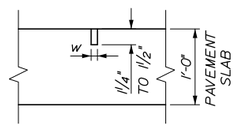

W = ½" FOR GRADIENT ENDS
⅜" FOR ALL OTHER CUTS

SENSOR CUT

N.T.S.

NOTES:

1. TRANSCORE SHALL INJECT LOCTITE EPOXY INTO SAW CUT BEFORE INSTALLING SENSORS AND LEADS. TRANSCORE SHALL PROVIDE EQUIPMENT, TEMPLATES AND EPOXY. SEE SPECIAL PROVISIONS SECTION 655 FOR MORE INFORMATION.

2. ALL LAYOUT FOR PRIMARY AND GRADIENT SENSORS SHALL BE PROVIDED AND VERIFIED BY TRANSCORE PRIOR TO CUTTING CONCRETE.

3. ¼" DEPRESSION FOR EPOXY OVERLAY SHALL BE COMPLETED PRIOR TO SAW CUTTING CONCRETE FOR LOOPS.

4. MEASUREMENT FOR ITEM 515.23 EPOXY OVERLAY SHALL BE 10 SY PER LANE.

5. LOOP LAYOUT IS TYPICAL FOR ALL ENTRY LANES.

6. THE CONTRACTOR SHALL EXTEND THE GALVANIZED RIGID METAL CONDUIT 9'-9" BEYOND THE LIMITS OF THE CANOPY FOR THE INSTALLATION OF THE DVAS IN LANE 5.

Date:9/5/2015

Filename: 114_SensorDetails.dgn

Scale: AS NOTED

No.	Revision	By	Date

Designed by: HNTB

CONSULTANT PROJECT MANAGER: R. Bruce Munger, P.E.

	By	Date		By	Date
Designed	WA	08/15	Checked	WA	08/15
Drawn	CNP	08/15	In Charge of	RAL	08/15

HNTB CORPORATION
340 County Road, Suite 6-C
Westbrook, ME 04092
TEL (207) 774-5155
FAX (207) 228-0909

MAINE TURNPIKE

THE GOLD STAR MEMORIAL HIGHWAY

MTA PROJECT MANAGER: William Yates

INTERCHANGES 32, 36, & 46 NB TOLL SYSTEM UPGRADES

SENSOR DETAILS

SHEET NUMBER: EM-16

CONTRACT:2015.12

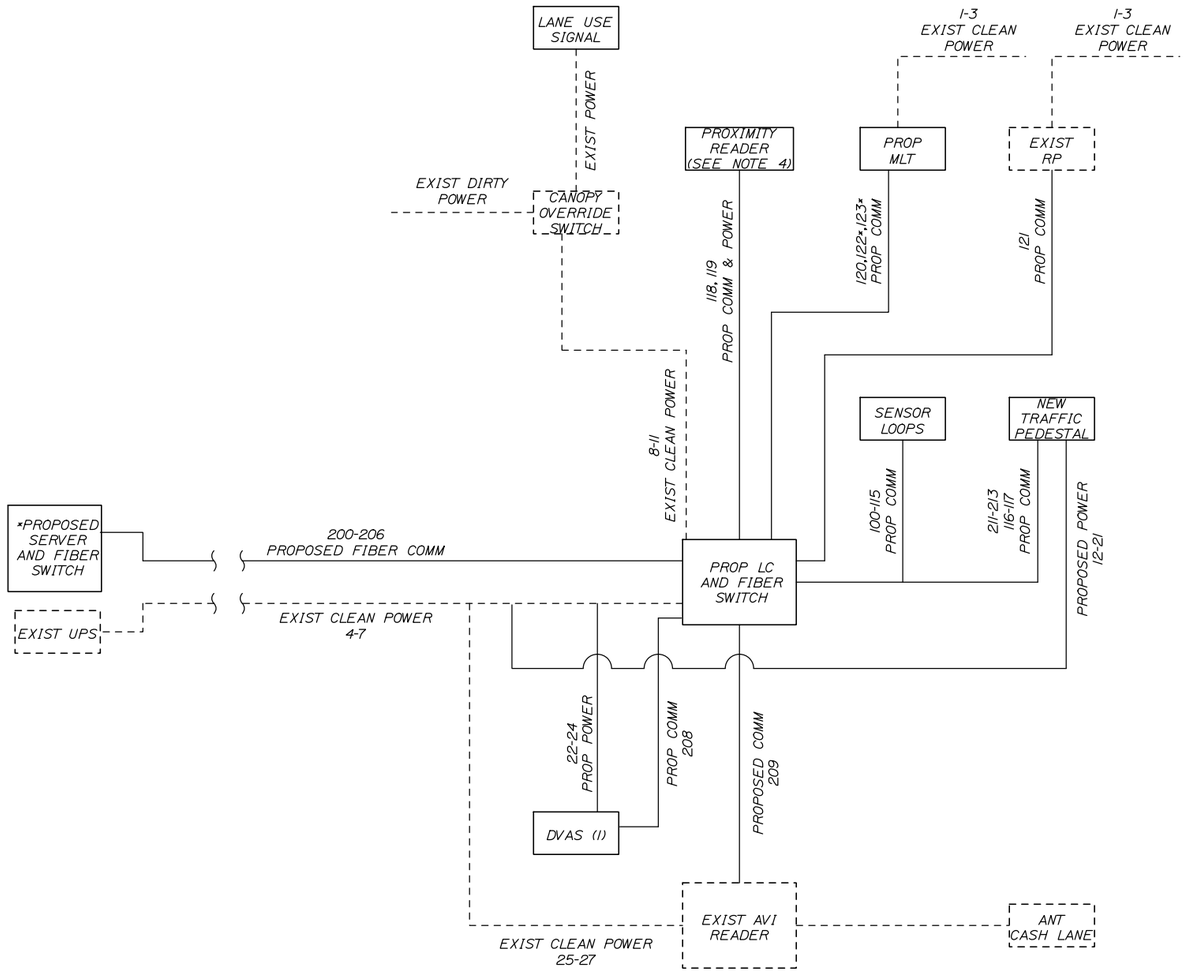

TOLLING EQUIPMENT SYSTEMS DIAGRAM - ENTRY LANE ONLY

*PROVIDED BY SYSTEM INTEGRATOR

NOTES:

1. NUMBERS CORRESPOND TO NUMBERS LISTED ON WIRING SCHEDULES.

2. DIAGRAM SHOWN FOR TYPICAL CASH LANE.

3. EXIT LANE CONTROLLER WILL HAVE CABLES TO ANTENNA, POWER, COMMUNICATIONS (FIBER OPTIC CABLE) AND DVAS.

4. PROXIMITY READER FOR FUTURE. INSTALL AND LEAVE SLACK UNDER COUNTER.

5. KEY SWITCHES SHALL BE USED IN BOTH DVAS AND VES CAMERAS CLEAN POWER LINES.

Date:9/5/2015

Filename: 115_WiringDiagram.dgn

Scale:

No.	Revision	By	Date

Designed by: HNTB

CONSULTANT PROJECT MANAGER: R. Bruce Munger, P.E.

	By	Date		By	Date
Designed	WA	08/15	Checked	WA	08/15
Drawn	CNP	08/15	In Charge of	RAL	08/15

HNTB CORPORATION
340 County Road, Suite 6-C
Westbrook, ME 04092
TEL (207) 774-5155
FAX (207) 228-0909

MAINE TURNPIKE

THE GOLD STAR MEMORIAL HIGHWAY

MTA PROJECT MANAGER: William Yates

INTERCHANGES 32, 36, & 46 NB TOLL SYSTEM UPGRADES

TYPICAL POWER & COMMUNICATIONS LINE DIAGRAM

SHEET NUMBER: EM-17

CONTRACT:2015.12

WIRING SHOWN IS FOR TYPICAL CASH LANE. REPLICATE FOR SIMILAR LANES.

ATT/ETC LANE TYPE POWER WIRING SCHEDULE

	WIRE LABEL	DESCRIPTION	AWG	COLOR	CORE	JACKET	VOLTAGE	CIRCUIT BREAKER	FROM	TO	LANE SERVER TERMINAL #	TERMINATION REQUIREMENTS	TERMINATIONS	STATUS
BOOTH QUAD OUTLET														
1	(LANE CONTROLLER) .L.B QUAD	PERIPHERAL POWER (HOT, NON-SWITCHED)	12	BLACK	STRANDED	THHW	120 VAC	20	EXISTING UPS	BOOTH QUAD OUTLET LOCATE WITHIN 3 FT OF ATTENDANT WORK AREA	N/A	INSTALL QUAD OUTLET	POWER PANEL	REUSE EXISTING
2	(LANE CONTROLLER) .N.B QUAD	PERIPHERAL POWER (NEUTRAL)		WHITE									POWER PANEL	REUSE EXISTING
3	(LANE CONTROLLER) .G.B QUAD	PERIPHERAL POWER (GROUND)		GREEN									POWER PANEL	REUSE EXISTING
LANE SERVER														
4	(LANE CONTROLLER)..S.T1-1	LANE SERVER POWER (HOT, NON-SWITCHED)	12	BLACK	STRANDED	THHW	120 VAC	20	BOOTH or MAIN POWER DSTRIBUTION PANEL and ISOLATED GROUND BAR	LANE SERVER FIELD WIRING (T1) TERMINAL BLOCK	T1-1	BARE WIRE (Capped and Taped for termination by UTS)	POWER PANEL	REUSE EXISTING
5	(LANE CONTOLLER) .N.LS.T1-2	LANE SERVER POWER (NEUTRAL)		WHITE							T1-2		POWER PANEL	REUSE EXISTING
6	(LANE CONTROLLER) .LS.T1-3	LANE SERVER POWER (GROUND)		GREEN							T1-4		POWER PANEL	REUSE EXISTING
7	(LANE CONTROLLER)IC.LS.T1-4	LANE SERVER POWER (ISOLATED GROUND)		GREEN W/ WHITE STRIPE							T1-3		POWER PANEL	REUSE EXISTING
CANOPY TRAFFIC SIGNAL														
8	COS.CTS-R.SIG	RED CANOPY TRAFFIC SIGNAL POWER (HOT, SWITCHED)	12	RED	STRANDED	THHW	120 VAC	N/A	PROPOSED LANE CONTROLLER (T1) TERMINAL BLOCK	CANOPY OVERRIDE SWITCH (See Note #2)	T1-9	BARE WIRE	POWER PANEL	REUSE EXISTING
9	COS.CTS-G.SIG	GREEN CANOPY TRAFFIC SIGNAL POWER (HOT, SWITCHED)		BLUE							T1-10		POWER PANEL	REUSE EXISTING
10	COS.CTS-N.SIG	CANOPY TRAFFIC SIGNAL POWER (NEUTRAL)		WHITE							T1-11		POWER PANEL	REUSE EXISTING
11	COS.CTS-CG.SIG	CANOPY TRAFFIC SIGNAL POWER (COMMON GROUND)		GREEN							T1-8		POWER PANEL	REUSE EXISTING
TRAFFIC CONTROL PEDESTAL (TCP)														
12	ITS.LS.T1-12	LANE 1 ISLAND TRAFFIC SIGNAL RED LIGHT POWER (HOT, SWITCHED)	12	BLACK	STRANDED	THHW	120 VAC	-	PROPOSED LANE CONTROLLER (T1) TERMINAL BLOCK	TRAFFIC CONTROL PEDESTAL FIELD WIRING TERMINAL BLOCK 'TA'	T1-12	TA - TH RED	POWER PANEL	REUSE EXISTING
13	ITS.LS.T1-13	LANE 1 ISLAND TRAFFIC SIGNAL AMBER LIGHT POWER (HOT, SWITCHED)		RED							T1-13	TA - TH AMBER	POWER PANEL	REUSE EXISTING
14	ITS.LS.T1-15	LANE 1 ISLAND TRAFFIC SIGNAL GREEN LIGHT POWER (HOT, SWITCHED)		BLUE							T1-15	TA - TH GREEN	POWER PANEL	REUSE EXISTING
15	ITS.LS.T1-16	LANE 1 ISLAND TRAFFIC SIGNAL POWER (NEUTRAL)		WHITE							T1-16	TA - TH (N)	POWER PANEL	REUSE EXISTING
16	PTD.LS.T1-6	LANE 1 PATRON TOLL DISPLAY POWER (HOT, NON-SWITCHED)	12	BLACK	STRANDED	THHW	120 VAC	-	PROPOSED LANE CONTROLLER (T1) TERMINAL BLOCK	TRAFFIC CONTROL PEDESTAL FIELD WIRING TERMINAL BLOCK 'TA'	T1-6	TA - PTD (H)	POWER PANEL	REUSE EXISTING
17	PTD.LS.T1-7	LANE 1 PATRON TOLL DISPLAY POWER (NEUTRAL)		WHITE							T1-7	TA - PTD (N)	POWER PANEL	REUSE EXISTING
18	PTD.LS.T1-8	LANE 1 PATRON TOLL DISPLAY POWER (GROUND)		GREEN							T1-8	TA - PTD / VIOL (G)	POWER PANEL	REUSE EXISTING
19	(Primary Power Panel).TCP	VES/TCP POWER (HOT, NON-SWITCHED)	12	BLACK	STRANDED	THHW	120 VAC	-	EXISTING CLEAN POWER FEED (SEPARATE BREAKERS FOR EACH SET OF VES CAMERAS)	TRAFFIC CONTROL PEDESTAL FIELD WIRING TERMINAL BLOCK 'TB'	N/A	TB - 120V (H)	POWER PANEL	REUSE EXISTING
20	(Primary Power Panel)N.TCP	VES/TCP POWER (NEUTRAL)		WHITE							N/A	TB - 120V (N)	POWER PANEL	REUSE EXISTING
21	(Primary Power Panel)G.TCP	VES/TCP POWER (GROUND)		GREEN							N/A	TB - 120V (G)	POWER PANEL	REUSE EXISTING
LANE DIGITAL VIDEO AND AUDIT CAMERA (DVAS)														
22	(Primary Power Panel).PP	LANE DVAS PAYPOINT CAMERA ENCLOSURE POWER (HOT - NON-SWITCHED)	12	BLACK	STRANDED	THHW	120 VAC	1 PER CAMERA	EXISTING CLEAN POWER FEED (SEPARATE BREAKERS FOR EACH CAMERA)	DVAS CAMERA ENCLOSURE FIELD WIRING POWER STRIP	N/A		POWER PANEL	REUSE EXISTING
23	(Primary Power Panel)N.PP	LANE DVAS PAYPOINT CAMERA ENCLOSURE POWER (NEUTRAL)		WHITE									POWER PANEL	REUSE EXISTING
24	(Primary Power Panel)G.PP	LANE DVAS PAYPOINT CAMERA ENCLOSURE POWER (GROUND)		GREEN									POWER PANEL	REUSE EXISTING
AUTOMATIC VEHICLE IDENTIFICATION (AVI)														
25	(Primary Power Panel)L.AVI	LANE AVI READER QUAD POWER (AC HOT)	12	BLACK	STRANDED	THHW	120 VAC	20	EXISTING CLEAN POWER FEED	EXISTING AVI READER	N/A	QUAD OUTLET	POWER PANEL	REUSE EXISTING
26	(Primary Power Panel)N.AVI	LANE AVI READER QUAD POWER (AC NEUTRAL)		WHITE									POWER PANEL	REUSE EXISTING
27	(Primary Power Panel) G.AVI	LANE AVI QUAD READER (GROUND)		GREEN									POWER PANEL	REUSE EXISTING
	GENERAL NOTES:	**1) RF MODULE POWER CONNECTOR IS DEPENDENT ON EQUIPMENT TYPE. SEE SPECIFIC USER INSTALLATION MANUAL OR UTS CONSTRUCTION AND INSTALLATION GUIDE FOR TYPE**												
		2) Canopy Override Switch - These are switched hot leads from the Lane Server clean power source fed through lane server switched terminals. When manually switching with dirty power, Line and Neutral leads must both be switched.												

Date:9/5/2015

Filename: 116_Schedule1.dgn

Scale:

No.	Revision	By	Date

Designed by: HNTB

CONSULTANT PROJECT MANAGER: R. Bruce Munger, P.E.

	By	Date		By	Date
Designed	WA	08/15	Checked	WA	08/15
Drawn	CNP	08/15	In Charge of	RAL	08/15

HNTB CORPORATION
340 County Road, Suite 6-C
Westbrook, ME 04092
TEL (207) 774-5155
FAX (207) 228-0909

MAINE TURNPIKE

THE GOLD STAR MEMORIAL HIGHWAY

MTA PROJECT MANAGER: William Yates

INTERCHANGES 32, 36, & 46 NB
TOLL SYSTEM UPGRADES

TYPICAL TOLL LANE POWER SCHEDULE

SHEET NUMBER: EM-18

CONTRACT:2015.12

Date:9/5/2015

WIRING SHOWN IS FOR CASH LANE. REPLICATE FOR SIMILAR LANES.

ATT/ETC DESCRETE WIRING SCHEDULE - DATA: DOOR WIRING LOGIC, SERIAL, VIDEO, AUDIO (Primary Server)

Intelligent Vehicle Identification System (IVIS) (For Wiring Only. Home Run Lead supplied as part of Sensor)

	WIRE LABEL	DESCRIPTION	AWG	COLOR	CORE	STANDARD	FROM	TO	LANE SERVER TERMINAL #	STATUS
100	T4-49.G1	NOT USED						SENSORS COME WITH 80' PIGTAIL. IF ADDITIONAL WIRE NEEDED SPLICE TO IMSA50-2 TYPE CABLE. INSTALL THE HOME RUN CABLE FROM THE LANE GROUND BOX TO THE LANE SERVER CONNECTION SPECIFIED IN THE ADJ COLUMN. ALL SPLICES MUST BE SOLDERED, TIGHTLY TWISTED, AND INSULATED TO BE WATER RESISTANT. FOR LANES NOT HAVING PRE-CLASSIFICATION, DELETE REQUIREMENTS FOR PRE-CLASSIFICATION SENSORS AND INTELLIGENT QUEUING SENSOR	T4-49	
101	T4-50.G1								T4-50	
102	T4-51.P1	NOT USED							T4-51	
103	T4-52.P1								T4-52	
104	T4-53.G2	NOT USED							T4-53	
105	T4-54.G2								T4-54	
106	T4-55.IQ	NOT USED							T4-55	
107	T4-56.IQ								T4-56	
108	T4-57.PP	PAY POINT PRIMARY SENSOR	16	BLACK	STRANDED	IMSA50-2	PAY POINT PRIMARY SENSOR		T4-57	NEW
109	T4-58.PP								T4-58	NEW
110	T4-59.G3	POST CLASSIFICATION GRADIENT SENSOR #1	16	BLACK	STRANDED	IMSA50-2	POST-CLASSIFICATION GRADIENT SENSOR #1		T4-59	NEW
111	T4-60.G3								T4-60	NEW
112	T4-61.P4	POST CLASSIFICATION PRIMARY SENSOR	16	BLACK	STRANDED	IMSA50-2	POST-CLASSIFICATION PRIMARY SENSOR		T4-61	NEW
113	T4-62.P4								T4-62	NEW
114	T4-63.G4	POST CLASSIFICATION GRADIENT SENSOR #2	16	BLACK	STRANDED	IMSA50-2	POST-CLASSIFICATION GRADIENT SENSOR #2		T4-63	NEW
115	T4-64.G4								T4-64	NEW

Toll Booth Peripheral Cables (MLT, Printer, PC Prox, PFD Display)

116	S3.1.PTD	LANE PATRON TOLL DISPLAY COMMUNICATIONS	RJ-45	BARE WIRE AT PEDESTAL	FIELD WIRED - ONLY FOUR PINS USED: PIN 3 - DEVICE RECEIVE, PIN 5 - GROUND, PINS 7 AND 8 JUMPERED	RS232	PEDESTAL WIRE CENTER TA - PTD DATA PEDESTAL WIRE CENTER TA - PTD DATA	TBD	NEW NEW
117	Lane TR	LANE TRIGGER	RJ-45	BARE WIRE	Pin to Pin	TTL(optically Isolated)	(See Note 1 below) Wire to Designated Trigger Terminals for Front and Rear Trigger (+/-) in Pedestal Wire Center	TBD	NEW
118	S8.PROX	LANE MANUAL LANE TERMINAL PCPROX CARD READER	RJ-45	DB9 (MALE)	SERIAL	RS232	(See Note 1 below)	S-8	NEW
119	PROXPWR	LANE MANUAL LANE TERMINAL PCPROX CARD READER POWER	PS2 (MALE)	PS2 (FEMALE)	SERIAL	RS232	(See Note 1 below)	PS/2	NEW
120	S9.MLT	LANE TOLL BOOTH MANUAL LANE TERMINAL (MLT) COMMUNICATIONS	RJ-45	DB9 (MALE)	SERIAL	RS232	(See Note 1 below)	TBD	NEW
121	S10.RP	LANE TOLL BOOTH RECEIPT PRINTER COMMUNICATIONS	RJ-45	DB25 (MALE)	NULL MODEM	RS232	PREFAB NULL MODEM CABLE - NOT TO EXCEED 50 FT	TBD	NEW
122*	MLTVGA	LANE TOLL BOOTH MANUAL LANE TERMINAL VIDEO	DB15(VGA) (FEMALE)	DB15(VGA) (MALE)	VGA/SVGA/XGA analog	VIDEO	PREFAB VIDEO CABLE - NOT TO EXCEED 50 FT	MONITOR	NEW
123*	MLTAUDIO	LANE TOLL BOOTH MANUAL LANE TERMINAL SPEAKER	3.5mm Plug (MALE)	3.5mm Plug (MALE)	AUDIO	AUDIO	PREFAB AUDIO CABLE	AUDIO	NEW

Notes:

1.) Lane Server to peripheral cable pin connections - refer to peripheral Installation Guide. RJ-45 at Lane Server: 1= CTS, 2=CD, 3=RxD, 4=Gnd, 5=Gnd, 6=TxD, 7=DTR, 8=RTS. (No handshaking is used)

2.) * Provided by System Integrator

Filename: 117_Schedule2.dgn

Scale:

No.	Revision	By	Date

Designed by: HNTB

CONSULTANT PROJECT MANAGER: R. Bruce Munger, P.E.

	By	Date		By	Date
Designed	WA	08/15	Checked	WA	08/15
Drawn	CNP	08/15	In Charge of	RAL	08/15

HNTB CORPORATION
340 County Road, Suite 6-C
Westbrook, ME 04092
TEL (207) 774-5155
FAX (207) 228-0909

MAINE TURNPIKE

THE GOLD STAR MEMORIAL HIGHWAY

MTA PROJECT MANAGER: William Yates

INTERCHANGES 32, 36, & 46 NB
TOLL SYSTEM UPGRADES

TYPICAL TOLL LANE DATA SCHEDULE

SHEET NUMBER: EM-19

CONTRACT:2015.12

Date:9/5/2015

WIRING SHOWN IS FOR CASH LANE. REPLICATE FOR SIMILAR LANES.

ATT-ETC LANE NETWORK WIRING SCHEDULE

	WIRE LABEL	DESCRIPTION	COLOR	CONNECTOR AT FX PATCH PANEL (COMPUTER ROOM)	COMMUNICATIONS SWITCH IN THE LANE SERVER	WIRING CONVENTION	PROTOCOL	FIELD WIRING INSTRUCTIONS	STATUS
LANE SERVER MULTIMODE FIBER (FOR REMOTE SWITCH ACCESS)									
200	(Ln#)LS	LANE SERVER NETWORK CONNECTION - SEND	BLUE	ST (MALE)	ST (MALE)	6-FIBER (TYP) (4 Min Fiber) MULTI-MODE 100mbs	62.5/125 MICRONS INDOOR/ OUTDOOR RISER RATED	FROM PLAZA COMMUNICATIONS RACK FIBER (FX) PATCH PANEL TO THE BOOTH LANE SERVER FIBER LINE INTERFACE UNIT (LIU) IN THE CABINET OR GUTTER. PROVIDE 1 EA 3M DUPLEX FX PATCH CABLE (STM to STM) FROM THE LIU TO THE LANE 1 LANE SERVER NETWORK SWITCH.	NEW
201		LANE SERVER NETWORK CONNECTION - RECEIVE	ORANGE						NEW
202		LANE SERVER NETWORK CONNECTION - SPARE SEND	GREEN						NEW
203		LANE SERVER NETWORK CONNECTION - SPARE RECEIVE	BROWN						NEW
204		LANE SERVER NETWORK CONNECTION - SPARE SEND (optional)	SLATE						NEW
205		LANE SERVER NETWORK CONNECTION - SPARE RECEIVE (optional)	WHITE						NEW
LANE SERVER ETHERNET CONNECTION (FOR LOCAL SWITCH -SAME ROOM- ACCESS)									
206	(Ln#).LS	LANE SERVER NETWORK CONNECTION (CAT5E/6 CABLE ALTERNATIVE TO FIBER ABOVE IF LOCAL SWITCH PROVIDED AND CONNECTION IS LESS THAN 300 FEET)	CAT5E COLOR STANDARD	RJ-45 (MALE)	RJ-45 (MALE)	CAT5E/6 DIRECT BURIAL	UTP	CAT5E BULK CABLE FROM THE SERVER ROOM TO THE LANE CABINET FIBER SWITCH LANE SERVER SWITCH. TERMINATE AND TEST CABLE RUN.	NEW
DIGITAL VIDEO AUDIT SYSTEM (DVAS)									
208	DVAS.(Ln#).PP	LANE DVAS PAYPOINT CAMERA NETWORK CONNECTIONS	CAT5E COLOR STANDARD	RJ-45 (MALE)	RJ-45 (MALE)	CAT5E/6 DIRECT BURIAL	UTP	CAT5E BULK CABLE FROM THE LANE CONTROLLER AND FIBER SWITCH TO THE LANE DVAS PAYPOINT CAMERA. TERMINATE AND TEST CABLE RUN. ALLOW 10' OF CABLE TO REACH FROM THE DVAS DATA JUNCTION BOX TO THE LANE 1 CAMERA ENCLOSURE.	NEW
AUTOMATIC VEHICLE IDENTIFICATION (AVI)									
209	(Ln#).AVIE	LANE AVI READER ETHERNET DATA CONNECTION	CAT5E COLOR STANDARD	RJ-45 (MALE)	RJ-45 (MALE)	CAT5E/6 DIRECT BURIAL	10/100 UTP	CAT5E BULK CABLE FROM THE LANE CONTROLLER CONNECTION PANEL AVI 110 JACK TO THE LANE AVI READER SERIAL TO ETHERNET CONVERTER	NEW
210	(Ln#).AVIS	LANE AVI READER DATA CONNECTION	COLOR STANDARD	DB-9F	DB-9M	SERIAL PATCH CABLE	10/100 UTP	SERIAL PATCH CABLE BETWEEN EACH MARKIV READER AND SERIAL TO ETHERNET CONVERTER	NOT USED
TRAFFIC CONTROL PEDESTAL (TCP) MAINTENANCE PORT									
211	(Ln#).TCPFVES	LANE TRAFFIC CONTROL PEDESTAL VES CAMERA CONNECTION	CAT5E COLOR STANDARD	RJ-45 (MALE)	RJ-45 (MALE)	CAT5E/6 DIRECT BURIAL	GIGABIT UTP	CAT5E BULK CABLE FROM THE LANE CONTROLLER CONNECTION PANEL VES 110 JACK TO THE LANE ISLAND TRAFFIC CONTROL PEDESTAL FRONT CAMER PORT.	NEW
212	(Ln#).TCPRVES	LANE TRAFFIC CONTROL PEDESTAL VES CAMERA CONNECTION	CAT5E COLOR STANDARD	RJ-45 (MALE)	RJ-45 (MALE)	CAT5E/6 DIRECT BURIAL	GIGABIT UTP	CAT5E BULK CABLE FROM THE LANE CONTROLLER CONNECTION PANEL VES 110 JACK TO THE LANE ISLAND TRAFFIC CONTROL PEDESTAL REAR CAMER PORT.	NEW
213	(Ln#).TCPM	LANE TRAFFIC CONTROL PEDESTAL MAINTENANCE NETWORK CONNECTION	CAT5E COLOR STANDARD	RJ-45 (MALE)	RJ-45 (MALE)	CAT5E/6 DIRECT BURIAL	GIGABIT UTP	CAT5E BULK CABLE FROM THE LANE CONTROLLER AND FIBER SWITCH TO THE LANE ISLAND TRAFFIC CONTROL PEDESTAL MAINTENANCE PORT.	NEW

NOTES:

1). ALL NETWORK CABLES ARE GIGABIT COMPLIANT, SUITABLE FOR OUTDOOR/WET ENVIRONMENT, OSP GRADE FOR DIRECT BURIAL

2). LANE SERVER NETWORK CONNECTIONS WILL BE FROM THE LANE CONTROLLERS TO THE PLAZA COMPUTERS, TO BE LOCATED IN THE THE EXISTING CABINETS FOR EXISTING VES CONTROLLER

Filename: 118_Schedule3.dgn

Scale:

No.	Revision	By	Date

Designed by: HNTB

CONSULTANT PROJECT MANAGER: R. Bruce Munger, P.E.

	By	Date		By	Date
Designed	WA	08/15	Checked	WA	08/15
Drawn	CNP	08/15	In Charge of	RAL	08/15

HNTB CORPORATION
340 County Road, Suite 6-C
Westbrook, ME 04092
TEL (207) 774-5155
FAX (207) 228-0909

MAINE TURNPIKE

THE GOLD STAR MEMORIAL HIGHWAY

MTA PROJECT MANAGER: William Yates

INTERCHANGES 32, 36, & 46 NB
TOLL SYSTEM UPGRADES

TYPICAL TOLL LANE NETWORK SCHEDULE

SHEET NUMBER: EM-20

CONTRACT:2015.12