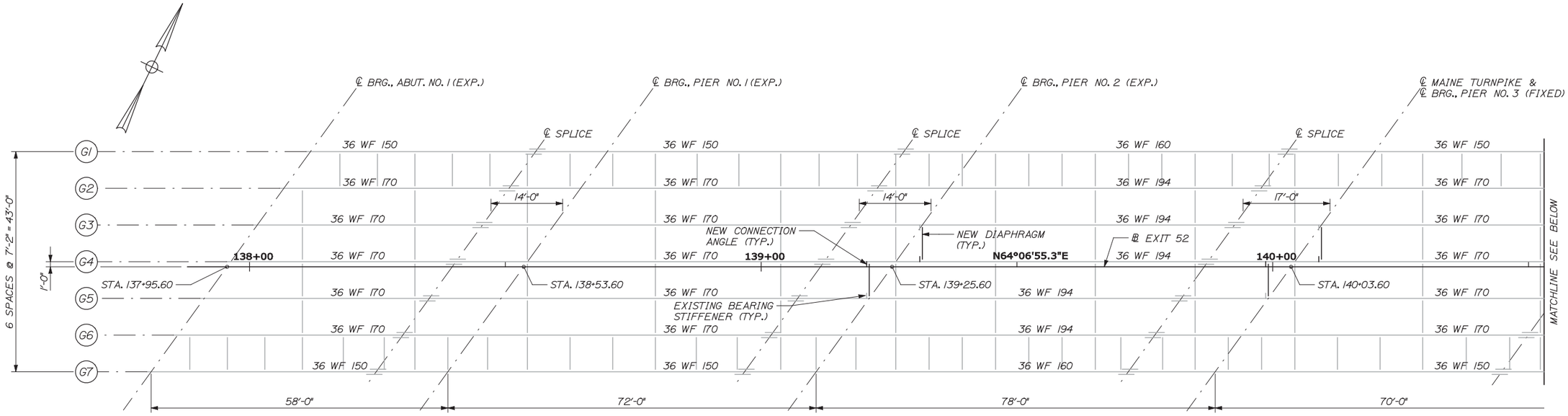

FRAMING PLAN

3/32" = 1'-0"

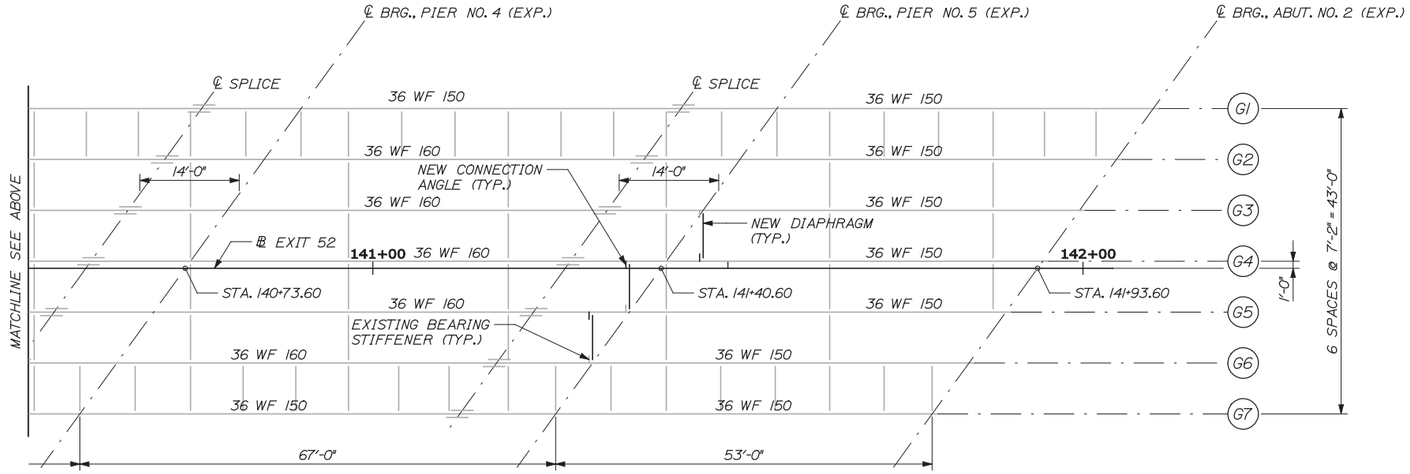

FRAMING PLAN

3/32" = 1'-0"

Scale:

3/32" = 1'-0"

No.	Revision	By	Date

Designed by:

T·Y·LIN INTERNATIONAL

CONSULTANT PROJECT MANAGER: Chris Taylor

	By	Date		By	Date
Designed	NLB	11/12	Checked	CPT	11/12
Drawn	SAM	11/12	In Charge of	CPT	11/12

T.Y. Lin International
12 Northbrook Drive
Building A, Suite One
Falmouth, Maine 04105
TEL: (207) 781-4721
FAX: (207) 781-4753

MAINE TURNPIKE

THE GOLD STAR MEMORIAL HIGHWAY

MTA PROJECT MANAGER: Scott Warchol

BRIDGE REHABILITATION
EXIT 52 OVERPASS

FRAMING PLAN

SHEET NUMBER: 52-S-16

CONTRACT: 2013.11

Filename: ...\msta\065_Framing_Plan.dgn Division: HIGHWAY Username: dmyers Date:1/24/2013
T:\Falmouth\Projects\ 2012\ 41.1695.00 - Blackstrap Road Bridge Rehab - Falmouth

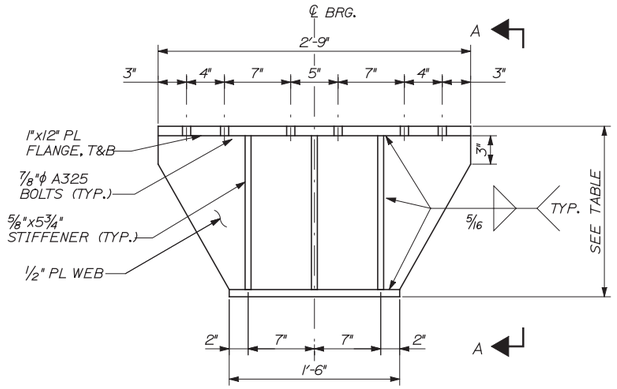

BOLSTER DETAIL, PIERS

1 1/2" = 1'-0"

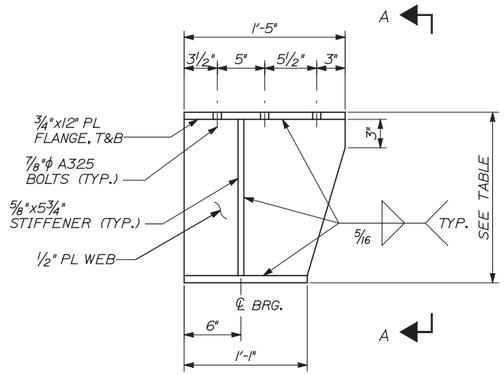

BOLSTER DETAIL, ABUTMENTS

1 1/2" = 1'-0"

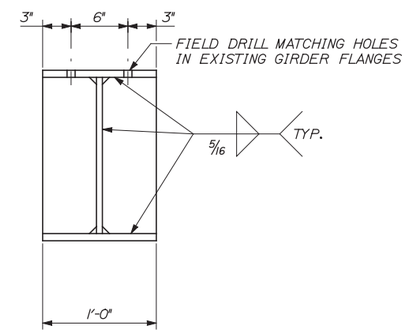

SECTION A-A

1 1/2" = 1'-0"

BOLSTER HEIGHTS (IN)	
ABUTMENT 1	16 13/16
PIER 1	16 13/16
PIER 2	16 13/16
PIER 3	16 13/16
PIER 4	16 13/16
PIER 5	16 13/16
ABUTMENT 2	19 13/16

NOTES:

1. BOLSTERS SHALL BE PAID FOR UNDER STRUCTURAL STEEL PAY ITEMS.
2. BOLT THREADS SHALL BE EXCLUDED FROM SLIP PLANES.
3. BEARING STIFFENERS SHALL BE PLUMB AFTER ERECTION AND DEAD LOADING OF THE STRUCTURE. INTERMEDIATE WEB STIFFENERS MAY BE PLUMB OR NORMAL TO TOP FLANGE.
4. DIAPHRAGM CONNECTION ANGLES SHALL BE PLUMB.
5. ALL BOLTS SHALL BE 7/8"ϕ, AASHTO M164, HIGH STRENGTH BOLTS. HOLES SHALL BE 15/16" ϕ UNLESS OTHERWISE NOTED.
6. SHOP DRILL 15/16" HOLES IN DIAPHRAGM AND CONNECTION ANGLES. FIELD DRILL 15/16" HOLES IN EXISTING BEARING STIFFENERS AND EXISTING STRINGER TO MATCH DIAPHRAGM AND CONNECTION ANGLES.

REMOVAL NOTES:

1. REMOVAL OF EXISTING OVERHANG BRACKETS SHALL BE INCLUDED IN PAY ITEM 202.14, "REMOVAL OF EXISTING RAILS".
2. PAINTING EXISTING CONNECTION PLATES NOT REQUIRED.
3. BRACKET SHALL BE REMOVED BY UNBOLTING FROM EXISTING CONNECTION PLATES.

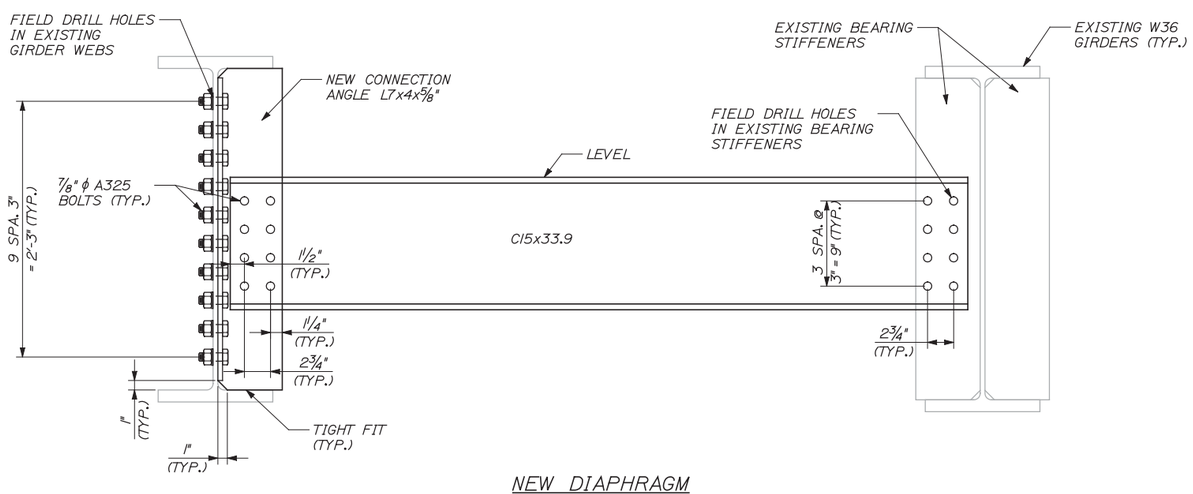

NEW DIAPHRAGM

3/4" = 1'-0"

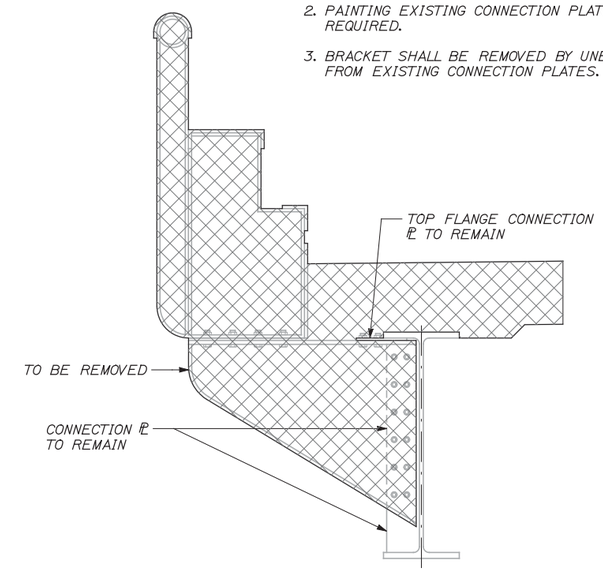

OVERHANG BRACKET REMOVAL DETAIL

1" = 1'-0"

Scale: AS NOTED

No.	Revision	By	Date

Designed by: T·Y·LIN INTERNATIONAL

CONSULTANT PROJECT MANAGER: Chris Taylor

	By	Date		By	Date
Designed	CPT	11/12	Checked	TJP	11/12
Drawn	SAM	11/12	In Charge of	CPT	11/12

T.Y. Lin International
12 Northbrook Drive
Building A, Suite One
Falmouth, Maine 04105
TEL: (207) 781-4721
FAX: (207) 781-4753

MAINE TURNPIKE

THE GOLD STAR MEMORIAL HIGHWAY

MTA PROJECT MANAGER: Scott Warchol

BRIDGE REHABILITATION
EXIT 52 OVERPASS

STRUCTURAL STEEL DETAILS I

SHEET NUMBER: 52-S-17

CONTRACT: 2013.11

Filename: ...\msta\066_Steel Details_1.dgn Division: HIGHWAY Username: dmyers Date:1/24/2013
T:\Falmouth\Projects\ 2012\ 41.1695.00 - Blackstrap Road Bridge Rehab - Falmouth