Date:1/7/2015

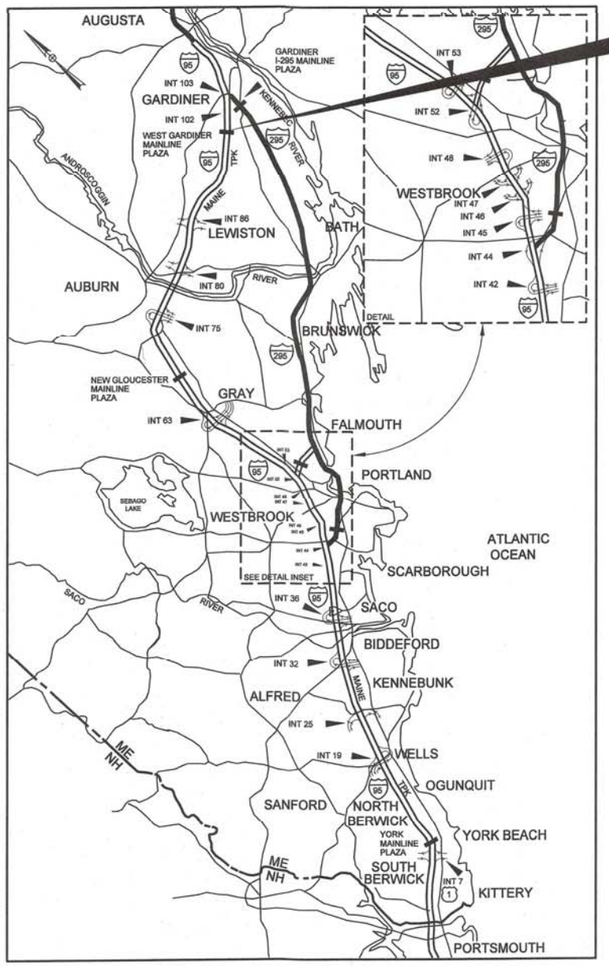

LOCATION MAP

WEST GARDINER BARRIER TOLL PLAZA
OPEN ROAD TOLLING CONVERSION
(MM 100.2)

MAINE TURNPIKE

THE GOLD STAR
MEMORIAL HIGHWAY

MAINE TURNPIKE AUTHORITY

DANIEL E. WATHEN, CHAIR
JAMES F. CLOUTIER, VICE CHAIR
GERARD P. CONLEY, SR., MEMBER
JOHN E. DORITY, MEMBER
ROBERT D. STONE, MEMBER
FREEMAN R. GOODRICH, MEMBER
KAREN DOYLE, MEMBER EX-OFFICIO

S. PETER MILLS, EXECUTIVE DIRECTOR

WEST GARDINER BARRIER TOLL PLAZA OPEN ROAD TOLLING CONVERSION (MM 100.2) CONTRACT 2015.11

INDEX OF SHEETS

SHEET NO.	DESCRIPTION
1	TITLE SHEET
2	ESTIMATED QUANTITIES
3-4	GENERAL NOTES
5-6	TYPICAL SECTIONS
7-14	MAINTENANCE OF TRAFFIC
15-21	GUARDRAIL AND BARRIER DETAILS
22-24	MISCELLANEOUS DETAILS
25	LIMIT OF DISTURBANCE
26-30	GENERAL PLANS
31-41	SIGNING AND STRIPING PLANS
42-43	OVERHEAD SIGN DETAILS
44-47	SIGN SUMMARY
48	SIGNING DETAILS
49-54	PROFILES
55-75	CROSS SECTIONS
76	STRUCTURAL GENERAL NOTES
77-78	STRUCTURAL GENERAL PLANS
79-80	PAVEMENT SLAB DEMO & REPAIRS
81	PAVEMENT SLAB DETAILS
82	ISLAND EXTENSION DETAILS
83-86	ORT SPACE FRAME DETAILS
87	TOLL PLAZA GENERAL PLAN
88	STRUCTURAL DEMOLITION PLANS
89-90	STRUCTURAL SLAB AND TUNNEL ROOF
91-92	ORT SLAB PLAN & FOUNDATIONS
93-95	CANOPY DETAILS
96	BRIDGE MOUNTED SIGN SUPPORTS
97-118	ELECTRICAL PLANS

APPROVED:
MAINE TURNPIKE AUTHORITY

WILLIAM H. YATES, III - DIRECTOR OF INFORMATION SERVICES & COMMUNICATIONS — DATE 1/6/15

STEPHEN R. TARTRE, P.E., - DIRECTOR OF ENGINEERING & BUILDING MAINTENANCE — DATE 1/6/15

HNTB

STATE OF MAINE — ROLAND A. LAVALLEE No. 6452 — LICENSED PROFESSIONAL ENGINEER

ROLAND A. LAVALLEE P.E., PLS
VICE PRESIDENT
DIRECTOR OF OPERATIONS — DATE 1/6/2015

Bartlett Design
LIGHTING & ELECTRICAL ENGINEERING
942 WASHINGTON STREET, BATH, ME 04530
TEL (207) 443-5447 FAX (207) 443-5560

STATE OF MAINE — LAWRENCE E. BARTLETT No. 7928 — LICENSED PROFESSIONAL ENGINEER

ELECTRICAL DESIGN
BARTLETT DESIGN
SHEES E-01 TO E-05
and E-10 to E-16

LAWRENCE E. BARTLETT, P.E. — DATE 1/6/2015

Filename: 001_MTATitle.dgn

Item No.	Item Description	Supplemental Description	Unit	Phase 1 (Cash Lane)	Phase 2 (ORT)	Total Quantity
202.15	Removing Existing Manhole or Catch Basin		EA		6	6
202.17	Removing Existing Structural Concrete	385 CY	LS	0.5	0.5	1
202.202	Removing Pavement Surface		SY		9500	9500
203.20	Common Excavation		CY		3500	3500
203.241	Common Borrow, Truck Measure		CY		3550	3550
203.25	Granular Borrow		CY		350	350
205.51	Widening of Existing Shoulder, Plan Quantity		LF		2000	2000
206.08	Structural Earth Excavation – Major Structures		CY		141	141
304.09	Aggregate Base Course - Crushed		CY		1220	1220
304.10	Aggregate Subbase Course - Gravel		CY		1350	1350
403.207	Hot Mix Asphalt, 19.0 mm Nominal Maximum Size		TON		2700	2700
403.208	Hot Mix Asphalt, 12.5 mm Nominal Maximum Size, Surface		TON		140	140
403.2083	Hot Mix Asphalt, 12.5 mm (Polymer Modified)		TON		1450	1450
403.209	Hot Mix Asphalt, 9.5 mm Nominal Maximum Size (sidewalks, drives, islands & incidentals)		TON		500	500
403.211	Hot Mix Asphalt (shimming)		TON		280	280
403.213	Hot Mix Asphalt, 12.5 mm Nominal Maximum Size, Base		TON		930	930
409.15	Bituminous Tack Coat, Applied		GAL		2750	2750
419.30	Sawing Bituminous Pavement		LF		4000	4000
424.323	Asphalt Rubber Fiber Crack Sealer - Applied		LB	300	650	950
459.061	Bituminous Concrete Waterway, Type II		EA		2	2
470.081	Berm Dropoff Correction – Grindings, Non-Guardrail Areas		TON		3600	3600
502.231	Structural Concrete, Space Frame Pedestals		CY	15	15	30
502.261	Structural Concrete, Grade Beams and ORT Slabs		CY		205	205
502.262	Structural Concrete, Pavement Slabs		CY	175		175
502.263	Structural Concrete, Plaza Islands and Slab Infill Concrete		CY		93	93
502.264	Structural Concrete, Departure Slab		CY		46	46
503.14	Epoxy-Coated Reinforcing Steel, Fabricated and Delivered		LB	6000	13200	19200
503.15	Epoxy-Coated Reinforcing Steel, Placing		LB	6000	13200	19200
503.18	Glass Fiber Reinforced Polymer (GFRP) Reinforcing Bars, Fabricated and Delivered		LB	5200	37400	42600
503.19	Glass Fiber Reinforced Polymer (GFRP) Reinforcing Bars, Placing		LB	5200	37400	42600
503.90	Synthetic Fiber Reinforcement		LB	550	550	1100
504.80	Space Frame Canopy, Fabricated and Delivered		LS		1	1
504.81	Space Frame Canopy, Erection		LS		1	1
504.90	Steel Post Support System		LS		1	1
504.91	Mounting Bracket Assemblies		LS		1	1
506.14	Field Painting of Existing Steel – Canopy Supports		LS	1		1
506.15	Shop Coating of New Steel		LS	1		1
506.17	Surface Preparation of Existing Steel – Canopy Supports		LS	1		1
506.18	Containment System and Pollution Control Measures		LS	1		1
506.191	Disposal of Hazardous or Toxic Material		LS	1		1
508.14	High Performance Waterproofing Membrane	600 SY	LS		1	1
511.091	Temporary Earth Support Systems		LS		1	1
515.202	Clear Protective Coating for Concrete Surfaces		SY	800	650	1450
515.23	Epoxy Overlay		SY	50	65	115
518.64	Concrete Slab Crack Repairs		LF	50	50	100
518.81	Partial Depth Concrete Slab Repairs Type I		SF	1200	1200	2400
518.82	Partial Depth Concrete Slab Repairs Type II		SF	600	700	1300
518.83	Full Depth Concrete Slab Repairs		SF	50	200	250
526.306	Temporary Concrete Barrier Type I - Supplied by Authority	2300 LF	LS	0.2	0.8	1
526.351	Median Barrier Type I - Precast		LF		930	930
526.3511	Median Barrier Type IA - Precast		LF		1350	1350
526.3512	Median Barrier Type IB - Precast		LF		126	126
526.3513	Median Barrier Type IC - Cast-in-Place		LF		40	40
526.352	Median Barrier Type II - Cast-in-Place		LF		200	200
526.353	Median Barrier Type III - Precast		LF		174	174
526.361	Median Barrier Transition Type I - Precast		EA		4	4
526.362	Median Barrier Transition Type II - Precast		EA		2	2
527.305	Energy Absorbing System (CAT) - Remove and Stack		EA		2	2
527.306	Center Barrier Crash Attenuator (FasTRACC)		EA		2	2
527.341	Work Zone Crash Cushions - TL-3		UNIT		6	6
602.30	Flowable Concrete Fill		CY		5	5
603.155	12 inch Reinforced Concrete Pipe - Class III		LF		710	710
603.165	15 inch Reinforced Concrete Pipe - Class III		LF		330	330
603.175	18 inch Reinforced Concrete Pipe - Class III		LF		400	400
603.195	24 inch Reinforced Concrete Pipe - Class III		LF		24	24
603.28	Concrete Collar for Reinforced Concrete Pipe		EA		4	4
604.09	Catch Basin Type B1		EA		29.8	29.8
604.18	Adjusting Manhole or Catch Basin to Grade		EA	3		3
604.184	Rebuild Catch Basin to Grade - Type II		EA		2	2
604.186	Rebuild Catch Basin to Grade - Type IV		EA		1	1
604.26	Catch Basin Type B5		EA		2.4	2.4

Item No.	Item Description	Supplemental Description	Unit	Phase 1 (Cash Lane)	Phase 2 (ORT)	Total Quantity
606.1723	Bridge Transition - Type III		EA		2	2
606.1724	Bridge Transition - Type III, Modified		EA		2	2
606.178	Guardrail Beam		LF		50	50
606.24	Guardrail Type 3d - Single Rail		LF		925	925
606.2401	Guardrail Type 3d - Double Rail		LF		50	50
606.278	Terminal End - Anchored End		EA		6	6
606.353	Delineator Post		EA		40	40
606.354	Delineator Post - Remove and Reset		EA		10	10
606.3606	Guardrail - Remove, Modify and Reset, Double Rail		LF		150	150
606.3631	Guardrail - Remove, Stack and Dispose		LF		150	150
606.471	Single Offset Block - W-Beam		EA		50	50
606.48	Single Galvanized Steel Post		EA		10	10
606.65	Guardrail Thrie Beam - Single Rail		LF		900	900
606.66	Terminal End Thrie Beam		EA		2	2
606.701	Asymmetrical Thrie Beam Transition		EA		2	2
606.754	Widen Shoulder for Guardrail 350 Flared Terminal		EA		4	4
606.80	Guardrail 350 FLEAT Terminal		EA		4	4
607.40	Chain Link Fence - 3' High		LF		400	400
607.41	Post Assembly for Sign or Chain Link Fence		EA		56	56
609.191	Concrete Curb Type 2		LF		48	48
610.08	Plain Riprap		CY		10	10
610.181	Temporary Stone Check Dam		CY		10	10
613.319	Erosion Control Blanket		SY		3600	3600
615.07	Loam		CY		620	620
618.1411	Seeding Method Number 3, Plan Quantity		UNIT		51	51
619.1201	Mulch, Plan Quantity		UNIT		51	51
619.1202	Temporary Mulch		LS		1	1
620.58	Erosion Control Geotextile		SY		20	20
626.11	Precast Concrete Junction Box		EA	12		12
626.31	18 Inch Foundation		EA		2	2
626.311	18-Inch Diameter Drilled Shaft		LF		78	78
626.32	24 Inch Foundation		EA	12	12	24
626.3321	36-Inch Diameter Drilled Shaft		LF	73	53	126
626.3322	36-Inch Diameter Drilled Shaft - Rock Socket		LF	24	24	48
627.681	Temporary 6 Inch Painted Pavement Marking Line - Yellow or White		LF		10800	10800
627.77	Removing Existing Pavement Marking		SF		5700	5700
627.812	Temporary Raised Pavement Markers		EA		410	410
629.05	Hand Labor, Straight Time		HR	80	80	160
631.10	Air Compressor (including operator)		HR	20	80	100
631.11	Air Tool (including operator)		HR	20	80	100
631.12	All Purpose Excavator (including operator)		HR		80	80
631.171	Truck - small (including operator)		HR		80	80
631.32	Culvert Cleaner (including operators)		HR		10	10
631.36	Foreman		HR	20	80	100
631.50	Jackhammer (air tool including operator)		HR	80	80	160
631.51	Bucket Truck		HR	80	80	160
631.52	Scissor Lift		HR	80	80	160
631.53	Electrician		HR	80	120	200
631.54	Electrician's Apprentice		HR	80	120	200
634.175	Replacement LED Fixture		EA	11		11
634.208	Remove and Reset Light Standard		EA	12		12
639.191	Field Office, Type B		EA		1	1
643.711	Lane Use Signal Modification		EA	4		4
645.105	Remove and Stack Sign		EA		69	69
645.107	Remove and Stack Canopy Mounted Sign		EA		4	4
645.121	Overhead Guide Sign: (Sta. 5107+00)		LS		1	1
645.122	Overhead Guide Sign: (Sta. 5125+00)		LS		1	1
645.131	Bridge Overpass-Mounted Guide Sign: (Sta. 5057+18)		LS		1	1
645.1311	Bridge Overpass-Mounted Guide Sign: (Sta. 5057+18)		LS		1	1
645.132	Bridge Overpass-Mounted Guide Sign: (Sta. 5195+84)		LS		1	1
645.1321	Bridge Overpass-Mounted Guide Sign: (Sta. 5195+84)		LS		1	1
645.151	Cantilever Guide Sign: (Sta. 5080+50)		LS		1	1
645.152	Cantilever Guide Sign: (Sta. 5097+75)		LS		1	1
645.153	Cantilever Guide Sign: (Sta. 5134+00)		LS		1	1
645.154	Cantilever Guide Sign: (Sta. 5152+00)		LS		1	1
645.155	Variable Speed Limit Sign		EA		2	2
645.161	Breakaway Device Single Pole		EA		2	2
645.162	Breakaway Device Multi Pole		EA		6	6
645.251	Roadside Guide Signs, Type I		SF		450	450
645.271	Regulatory, Warning, Confirmation and Route Assembly Sign, Type I		SF		420	420
645.289	Steel H-Beam Poles		LB		4200	4200
645.501	Remove and Reset Mainline Sign No. 1		LS		1	1
645.502	Remove and Reset Mainline Sign No. 2		LS		1	1
645.503	Remove and Reset Mainline Sign No. 3		LS		1	1
645.504	Remove and Reset Mainline Sign No. 4		LS		1	1
645.505	Remove and Reset Mainline Sign No. 5		LS		1	1
645.506	Remove and Reset Mainline Sign No. 6		LS		1	1
645.507	Remove and Reset Mainline Sign No. 7		LS		1	1

Item No.	Item Description	Supplemental Description	Unit	Phase 1 (Cash Lane)	Phase 2 (ORT)	Total Quantity
652.30	Flashing Arrow		EA		4	4
652.301	Flashing Beacon - Solar Powered		EA		2	2
652.312	Type III Barricades		EA	4	8	12
652.33	Drum		EA	130	340	470
652.34	Cone		EA		50	50
652.35	Construction Signs		SF	1100	1000	2100
652.361	Maintenance of Traffic Control Devices		LS	0.5	0.5	1
652.38	Flaggers		HR		80	80
652.41	Portable-Changeable Message Sign		EA		2	2
652.45	Truck Mounted Attenuator		CD			60
655.01	Installation of ORT Controller Cabinet		EA		2	2
655.012	Installation of Cash Lane Controller Cabinet		EA	4		4
655.02	DVAS Mount Installation		EA	4	4	8
655.03	VCARS Mount Installation		EA		12	12
655.04	Installation of Sensor Loops		LS	0.5	0.5	1
655.05	Installation of AVI Antennas		EA		10	10
655.06	Installation of AVI Readers		EA		2	2
655.07	Traffic Control Pedestal Preparation Work		EA	4		4
655.08	#2/0 Wire for UPS re-wiring		LF	200		200
655.09	Armor Cable - 10/3		LF	300		300
655.10	#4 AWG Wire		LF		450	450
655.101	#6 AWG Wire		LF	7100		7100
655.11	#10 AWG Wire		LF	2500	100	2600
655.12	#12 AWG Wire		LF	5000	10900	15900
655.13	#14 AWG Wire		LF		6000	6000
655.14	4pr/24 (Category 5e) Cable		LF	3200	12500	15700
655.15	LMR 400 Cable		LF		1100	1100
655.16	Fiber Optic Cable – 6 Fiber		LF	1400	1300	2700
655.17	IVIS Homerun Loop Cable (IMSA 50-2 #16)		LF		4200	4200
655.18	Half Diamond Loop Wire (#16 XHHW or XLP Stranded Wire)		LF		400	400
655.200	1 1/2" Schedule 40 PVC Conduit		LF		100	100
655.201	3" Schedule 40 PVC Conduit		LF		100	100
655.202	4" Schedule 40 PVC Conduit		LF		50	50
655.2021	1" Schedule 80 PVC Conduit		LF	100		100
655.203	1 1/2" Schedule 80 PVC Conduit		LF	400	550	950
655.2031	2" Schedule 80 PVC Conduit		LF	2500		2500
655.204	3" Schedule 80 PVC Conduit		LF	50	1700	1750
655.205	4" Schedule 80 PVC Conduit		LF		190	190
655.206	1" Galvanized Rigid Metal Conduit		LF	150	320	470
655.2061	3/4" Galvanized Rigid Metal Conduit		LF		100	100
655.207	1 1/2" Galvanized Rigid Metal Conduit		LF	150	200	350
655.208	3" Galvanized Rigid Metal Conduit		LF		550	550
655.209	1/2" Liquid Tight Metallic Flexible Conduit		LF		360	360
655.210	3/4" Liquid Tight Metallic Flexible Conduit		LF		270	270
655.2101	1 1/2" Liquid Tight Metallic Flexible Conduit		LF	100		100
655.211	1 1/2" Electrical Metallic Tubing Conduit		LF		30	30
655.212	2" Electrical Metallic Tubing Conduit		LF		150	150
655.213	3" Electrical Metallic Tubing Conduit		LF	80	100	180
655.214	4" Electrical Metallic Tubing Conduit		LF		40	40
655.215	3/4" Electrical Metallic Tubing Conduit		LF		50	50
655.221	Type A Pull Box Inside		EA	8		8
655.222	Type C Pull Box in Tunnel		EA	4		4
655.223	Type D Pull Box Outdoor Canopy		EA	4		4
655.224	Type E Pull Box Steel In booth		EA	4		4
655.225	Type F Pull Box Outside		EA	4		4
655.30	12" x 12" x 6" Galvanized Junction Box		EA		58	58
655.31	18" x 18" x 6" Galvanized Junction Box		EA		4	4
655.40	24" x 24" x 12" Junction Box		EA		6	6
655.42	36" x 30" x 20" NEMA 4X Cabinet		EA		2	2
655.43	60 AMP Panelboard Cabinet		EA		1	1
655.63	4-inch x 4-inch Plastic NEMA 4R Wireway		LF		12	12
655.64	6-inch x 6-inch Plastic NEMA 4R Wireway		LF		12	12
655.71	Removal of Existing Select Toll Equipment		LS	0.5	0.5	1
655.75	Concrete Encased Conduit		CY	10	15	25
655.80	Lightning Suppression System		EA		2	2
655.81	Key Switch		EA	4		4
655.82	Duplex Receptacle		EA	8		8
655.83	NEMA L5-30R Receptacle		EA	4		4
655.90	Space Frame Lighting		LS		1	1
655.91	LED Replacement Canopy Light Fixture		EA	12		12
656.50	Baled Hay, in place		EA		50	50
656.60	Temporary Berms		LF		2100	2100
656.62	Temporary Slope Drains		LF		150	150
656.632	30" Temporary Silt Fence		LF	1500	4400	5900
659.10	Mobilization		LS	0.5	0.5	1
800.10	Electrical Demolition		LS	0.5	0.5	1
800.20	Mechanical Demolition		LS	0.5	0.5	1
800.30	Toll Plaza Demolition and Restoration		LS		1	1

Date:2/13/2015

Filename: 002_EstimatedQuantities.dgn

Scale:

No.	Revision	By	Date

Designed by:

HNTB

CONSULTANT PROJECT MANAGER: R. Bruce Munger, P.E.

	By	Date		By	Date
Designed	TMH	02/15	Checked	RBM	02/15
Drawn	MPC	02/15	In Charge of	RAL	02/15

HNTB CORPORATION
340 County Road, Suite 6-C
Westbrook, ME 04092
TEL (207) 774-5155
FAX (207) 228-0909

MAINE TURNPIKE

THE GOLD STAR MEMORIAL HIGHWAY

MTA PROJECT MANAGER: William Yates

WEST GARDINER BARRIER TOLL PLAZA ORT CONVERSION

ESTIMATED QUANTITIES

SHEET NUMBER: QT-01

CONTRACT:2015.11

GENERAL

1. ALL DETAILS SHALL BE IN CONFORMANCE WITH MAINE DEPARTMENT OF TRANSPORTATION (MaineDOT) STANDARD DETAILS HIGHWAYS AND BRIDGES 2002 WITH UPDATES AND MaineDOT BEST MANAGEMENT PRACTICES FOR EROSION AND SEDIMENT CONTROL LATEST REVISION UNLESS OTHERWISE INCLUDED IN THESE PLANS.

2. CONTRACTOR IS REQUIRED TO MAINTAIN ACCESS TO ALL DRIVEWAYS AND SIDE ROADS DURING CONSTRUCTION UNLESS OTHERWISE SHOWN ON THE PLANS.

3. THE CONTRACTOR SHALL SUBMIT THE PROPOSED STAGING AREA(S) AND FIELD TRAILER LOCATION TO THE RESIDENT FOR APPROVAL PRIOR TO STARTING WORK.

4. UPON REQUEST, THE MTA WILL SUPPLY AS-BUILT PLANS OF THE WEST GARDINER PLAZA TO THE CONTRACTOR.

5. CONTRACTOR IS REQUIRED TO MAINTAIN ACCESS FOR MTA TO THE EMPLOYEES PARKING LOT SOUTH OF THE PLAZA DURING CONSTRUCTION UNLESS OTHERWISE SHOWN ON THE PLANS.

6. A COPY OF THE "GEOTECHNICAL REPORT OF FINDINGS" DATED AUGUST, 2014 IS AVAILABLE UPON REQUEST TO MTA AND IS AVAILABLE FOR DOWNLOAD AT MAINETURNPIKE.COM

7. DUST CONTROL IS INCIDENTAL TO CONTRACT.

8. WASTE MATERIALS SHALL BE DISPOSED OF OFF THE PROJECT SITE. IN ACCORDANCE WITH CHAPTER 404, DEPARTMENT OF ENVIRONMENTAL PROTECTION SOLID WASTE MANAGEMENT RULES.

EROSION CONTROL

1. THE ANTICIPATED EROSION CONTROL DEVICES ARE SHOWN ON THE PLANS. THE CONTRACTOR SHALL PROPOSE ACTUAL TYPE AND LOCATION OF DEVICES FOR APPROVAL BY THE RESIDENT. ADDITIONAL MEASURES MAY BE PROPOSED BY THE CONTRACTOR DUE TO SITE OR WEATHER CONDITIONS. THE RESIDENT MAY DIRECT THE CONTRACTOR TO IMPLEMENT ADDITIONAL MEASURES. ANY ADDITIONAL MEASURES APPROVED BY THE RESIDENT WILL BE MEASURED FOR PAYMENT.

2. 4" LOAM HAS BEEN ESTIMATED FOR 100% OF THE DISTURBED SLOPE AREA UNLESS OTHERWISE SPECIFIED ON THE PLANS. ACTUAL PLACEMENT OF THE LOAM SHALL BE AS DESIGNATED BY THE RESIDENT.

3. NEWLY DISTURBED EARTH SHALL BE MULCHED BY THE END OF EACH WORK DAY. MULCH SHALL BE MAINTAINED ON A DAILY BASIS. THIS WORK SHALL BE PAID FOR UNDER ITEM 619.1202 TEMPORARY MULCH.

4. ALL TEMPORARY AND PERMANENT EROSION CONTROL DEVICES SHALL BE INSTALLED IN ACCORDANCE WITH THE MAINE DEPARTMENT OF TRANSPORTATION BEST MANAGEMENT PRACTICES.

5. TEMPORARY SEED SHALL BE APPLIED TO ALL DISTURBED AREAS THAT WILL NOT BE COMPLETED WITHIN 30 DAYS.

6. TEMPORARY EROSION CONTROL BLANKET, ITEM 613.319 SHALL BE INSTALLED IN ALL DITCHES AND 2:1 SLOPES FROM TOP TO TOE OF SLOPE. LOAM AND SEED SHALL BE PLACED PRIOR TO THE INSTALLATION OF THE EROSION CONTROL BLANKET. LIMITS OF THE EROSION CONTROL BALNKET IN DITCHES SHALL BE 6' WIDE OR AS DESIGNATED BY THE RESIDENT. ALL SLOPES SHALL BE SEEDED WITH METHOD NO. 3.

EARTHWORK

1. CLEARING LIMIT LINES ARE SHOWN ON THE PLANS 10' BEYOND AND PARALLEL TO THE CONSTRUCTION SLOPE LINES AND ARE FOR REFERENCE ONLY. THE MAINE TURNPIKE WILL BE COMPLETING THE CLEARING ON OR BEFORE APRIL 01, 2015. ACTUAL TREE LINE MAY VARY DUE TO CLEARING EFFORTS.

2. EXCAVATIONS ACCOMPLISHED AS PART OF THIS PROJECT SHALL BE CONSTRUCTED IN ACCORDANCE WITH OSHA SUBPART P OF 29 CFR PART 1926.650-652 (CONSTRUCTION STANDARDS FOR EXCAVATION).

DRAINAGE

1. NO EXISTING DRAINAGE SHALL BE ABANDONED, REMOVED OR PLUGGED WITHOUT PRIOR APPROVAL OF THE RESIDENT.

2. INLETS AND OUTLETS OF ALL CULVERTS SHALL BE RIPRAPPED UNLESS OTHERWISE NOTED ON THE PLANS OR DIRECTED BY THE RESIDENT.

3. ALL DITCH ELEVATIONS AND OFFSETS SHOWN ON THE CROSS SECTIONS ARE FOR THE FINISHED DITCH FLOW LINE.

4. ANY NECESSARY CUTTING OF EXISTING PIPES TO FIT IN AREAS OF PROPOSED CATCH BASINS AND MANHOLES WILL NOT BE PAID FOR SEPARATELY, BUT SHALL BE INCIDENTAL TO THE PROPOSED CATCH BASIN AND MANHOLE ITEMS.

5. ANY NECESSARY CUTTING OF EXISTING CATCH BASINS TO TAKE A PROPOSED PIPE WILL NOT BE PAID FOR SEPARATELY AND SHALL BE INCIDENTAL TO THE PROPOSED CULVERT ITEMS.

6. EXISTING CULVERTS TO REMAIN SHALL BE CLEANED AS DIRECTED BY THE ENGINEER. PAYMENT WILL BE MADE UNDER ITEM 631.32 CULVERT CLEANER (INCLUDING OPERATORS).

7. ALL NEW CATCH BASIN GRATES SHALL BE AS MANUFACTURED BY EJ COMPANY OF BROCKTON, MA.

8. REMOVAL OF EXISTING DRAINAGE CULVERTS, AS IDENTIFIED ON THE GENERAL PLANS, SHALL BE INCIDENTAL TO THE CONTRACT.

GUARDRAIL

1. AT THE END OF THE WORK DAY, EVERYDAY, THE CONTRACTOR IS REQUIRED TO HAVE AN APPROVED CRASHWORTHY END TREATMENT ON ALL GUARDRAIL AND BARRIER WITHIN ALL WORK AREAS THAT ARE ACCESSIBLE TO TRAFFIC.

2. CONNECTIONS FOR PROPOSED GUARDRAIL TO EXISTING GUARDRAIL SHALL BE INCIDENTAL TO THE PROPOSED GUARDRAIL ITEMS.

3. TWO GUARDRAIL DELINEATOR POSTS SHALL BE INSTALLED AT EACH FLEAT.

4. CONTRACTOR SHALL STOCKPILE ALL GUARDRAIL TO BE REMOVED AND RESET. REMOVED AND STACKED AND REMOVED, MODIFIED AND RESET UNTIL GUARDRAIL INSTALLATION HAS BEEN COMPLETE. STOCKPILING THE GUARDRAIL SHALL BE INCIDENTAL TO ITEM 606.3631 GUARDRAIL - REMOVE AND DISPOSE. ALL USEABLE EXISTING GUARDRAIL SHALL BE MODIFIED AND RESET PRIOR TO BEING PAID TO INSTALL NEW GUARDRAIL. ANY USEABLE GUARDRAIL REMAINING AFTER ALL GUARDRAIL HAS BEEN INSTALLED SHALL BE DELIVERED TO THE GARDINER MAINTENANCE YARD AT MILE MARKER 102, NB.

5. FOR ALL NEW GUARDRAIL TYPES 3d W-BEAM AND THRIE-BEAM SINGLE AND DOUBLE RAIL - OFFSET BLOCKS SHALL BE NON-WOOD CONFORMING TO NCHRP 350 TEST LEVEL 3.

6. ALL PROPOSED GUARDRAIL AND RESET GUARDRAIL SHALL BE INSTALLED IN A MANNER TO AVOID ELECTRICAL AND DRAINAGE STRUCTURES.

7. DAMAGE TO EXISTING PAVEMENT OR NEW PAVEMENT DUE TO THE INSTALLATION OF NEW OR RESET GUARDRAIL SHALL BE REPAIRED AND PAYMENT SHALL BE INCIDENTAL TO THE GUARDRAIL ITEMS.

8. CONTRACTOR SHALL NOTE THE TEMPORARY MEDIAN OPENINGS ARE REQUIRED FOR LIVE ORT LANE TESTING AND STAGE GUARDRAIL INSTALLATION ACCORDINGLY. REFER TO MAINTENANCE OF TRAFFIC PLANS AND SPECIAL PROVISIONS.

9. EXISTING TUBULAR MARKERS SEPARATING OPPOSING TRAFFIC IN THE TOLL PLAZA SHALL BE REMOVED DURING PHASE 2 TRAFFIC CONTROL AND STACKED AT GARDINER MAINTENANCE YARD AT MILE MARKER 102 NB.

SIGN STRUCTURES/FOUNDATIONS

1. THESE NOTES APPLY ONLY TO OVERHEAD SIGN STRUCTURES. FOR ORT SPACE FRAME NOTES, SEE SHEET S-01.

2. THE CONTRACTOR SHALL DESIGN THE FOUNDATION FOOTINGS FOR NEW SIGN STRUCTURES IN ACCORDANCE WITH THE GEOTECHNICAL INFORMATION PROVIDED.

3. ANY NECESSARY FINE GRADING AROUND SIGN STRUCTURE FOUNDATIONS SHALL NOT BE PAID FOR DIRECTLY BUT SHALL BE INCIDENTAL TO THE INSTALLATION OF THE FOUNDATION.

4. AT LOCATIONS WHERE A MEDIAN FOUNDATION IS REQUIRED, THE FOOTPRINT OF THE DESIGNED FOUNDATION SHALL NOT EXTEND INTO THE SHOULDER OF THE ROADWAY AND SHALL BE TEMPORARILY OR PERMANENTLY CASED.

5. THE TOP OF SIGN STRUCTURE FOUNDATIONS SHALL BE AT LEAST 3 INCHES BUT NO MORE THAN 18 INCHES ABOVE THE GRADE. MEASUREMENT SHALL BE MADE FROM THE HORIZONTAL FOUNDATION FACE LEAST EXPOSED ON A SLOPE.

6. NEW FOUNDATIONS SHALL BE INSTALLED SUCH THAT THE MINIMUM VERTICAL CLEARANCE TO THE BOTTOM OF THE LOWEST SIGN IS AT LEAST 18'-0" FROM THE HIGH POINT OF THE ROADWAY. THE MAXIMUM VERTICAL CLEARANCE TO THE BOTTOM OF THE LOWEST SIGN SHALL NOT EXCEED 20'-6".

7. ANY NECESSARY DEWATERING OF FOUNDATION EXCAVATIONS SHALL NOT BE PAID BUT SHALL BE INCIDENTAL TO THE INSTALLATION OF THE FOUNDATIONS.

8. IF SOIL CONDITIONS DIFFER MATERIALLY FROM THOSE SHOWN ON THE GEOTECHNICAL BORING LOGS, THE CONTRACTOR SHALL STOP WORK ON THAT STRUCTURE'S FOUNDATIONS AND CONTACT THE RESIDENT.

9. ALL SIGN STRUCTURE DESIGNS SHALL CONFORM TO THE LATEST EDITION OF THE STANDARD SPECIFICATIONS FOR STRUCTURAL SUPPORTS FOR HIGHWAY SIGNS, LUMINAIRES AND TRAFFIC SIGNALS, AS PUBLISHED BY THE AMERICAN ASSOCIATION OF STATE HIGHWAY TRANSPORTATION OFFICIALS (AASHTO).

10. NEW SIGN ATTACHMENT HARDWARE SHALL BE PROVIDED TO ATTACH NEW AND RELOCATED OVERHEAD SIGNS TO THE NEW SIGN STRUCTURES.

11. DESIGN, FABRICATION AND INSTALLATION FOR ALL OVERHEAD AND CANTILEVER SIGN SUPPORTS INCLUDING THE STEEL TRUSS, FOUNDATIONS AND ATTACHMENT HARDWARE SHALL BE INCLUDED IN THE LUMP SUM ITEM COST FOR THE APPLICABLE STRUCTURE.

12. IF TEMPORARY SHEETING IS REQUIRED IT SHALL BE INCIDENTAL TO THE SIGN SUPPORT STRUCTURE AND SHALL MEET THE REQUIREMENTS UNDER SECTION 511. TEMPORARY SHEETING IS REQUIRED IF THE EXCAVATED SLOPES CAN NOT MEET OSHA REQUIREMENTS. NO DISTURBING OR UNDERMINING OF TURNPIKE PAVEMENT SHALL BE ALLOWED.

13. PASSING LANE CLOSURES BOTH NORTHBOUND AND SOUTHBOUND AND TEMPORARY CONCRETE BARRIER IN MEDIAN SHOULDERS ARE REQUIRED PRIOR TO REMOVING AND RESETTING EXISTING MEDIAN GUARDRAIL AND INSTALLING PROPOSED GUARDRAIL ITEMS AND SIGN BRIDGE. TO PROTECT TEMPORARY CONCRETE BARRIER ENDS, BARRIER SHALL BE LAPPED BEHIND EXISTING OR PROPOSED GUARDRAIL. SEE MAINTENANCE OF TRAFFIC DETAILS.

UTILITY

1. EXISTING UTILITIES ON THESE PLANS WERE COMPILED FROM FIELD SURVEY AND VARIOUS OTHER SOURCES. LOCATIONS ARE NOT GUARANTEED TO BE ACCURATE NOR IS IT GUARANTEED THAT ALL UTILITIES ARE SHOWN. NO SEPARATE OR ADDITIONAL COMPENSATION WILL BE ALLOWED TO THE CONTRACTOR DUE TO ANY VARIANCE BETWEEN THE DATA SHOWN ON THE PLANS AND THE ACTUAL FIELD CONDITIONS ENCOUNTERED. NO WORK SHALL BE STARTED UNTIL THE OWNERS OF THE VARIOUS UTILITIES ARE NOTIFIED BY THE CONTRACTOR OF THE PROPOSED CONSTRUCTION. THE CONTRACTOR IS ALSO REQUIRED TO CALL DIG SAFE AT 1-888-344-7233 PRIOR TO THE START OF THE WORK.

2. THE UTILITIES INVOLVED IN THIS CONTRACT ARE:
   - MAINE TURNPIKE AUTHORITY
   - CENTRAL MAINE POWER
   - FAIRPOINT COMMUNICATION

THE AUTHORITY IS RESPONSIBLE FOR MARKING MTA UTILITIES PRIOR TO CONSTRUCTION.

Date:2/13/2015

Filename: 003_GeneralNotes.dgn

Scale:

No.	Revision	By	Date

Designed by: HNTB

CONSULTANT PROJECT MANAGER: R. Bruce Munger, P.E.

	By	Date		By	Date
Designed	BPM	02/15	Checked	LZD	02/15
Drawn	MPC	02/15	In Charge of	RAL	02/15

HNTB CORPORATION
340 County Road, Suite 6-C
Westbrook, ME 04092
TEL (207) 774-5155
FAX (207) 228-0909

MAINE TURNPIKE

THE GOLD STAR MEMORIAL HIGHWAY

MTA PROJECT MANAGER: William Yates

WEST GARDINER BARRIER TOLL PLAZA ORT CONVERSION

GENERAL NOTES 1

SHEET NUMBER: GN-01

CONTRACT:2015.11

TOLLING - ORT

1. THE CONTRACTOR SHALL REMOVE AND LEGALLY DISPOSE THE FOLLOWING ITEMS FROM LANES 3, 4, 5, AND 6:
   A. TREADLE FRAME
   B. BOOTH DIRTY POWER PANELS
   C. ASSOCIATED WIRING, CONDUIT, COUPLINGS AND ATTACHMENT HARDWARE FOR POWER AND COMMUNICATION LINES
   D. LANE CONTROLLER ENCLOSURE

2. THE CONTRACTOR SHALL SALVAGE THE FOLLOWING ITEMS AND DELIVER TO THE MAINE TURNPIKE SIGN SHOP AT MILE MARKER 58.3, NB.:
   A. SIGNS TO BE REMOVED
   B. LIGHTING FIXTURES MOUNTED UNDERNEATH CANOPY
   C. CANOPY MOUNTED SIGNS AND BRACKETS
   D. ISLANDS C, D AND E TOLL BOOTH ENCLOSURES
   E. RED/GREEN CANOPY LANE USE SIGNALS FOR LANES 3, 4, 5 AND 6
   F. FLASHING YELLOW LIGHTS AT ISLANDS C, D AND E.
   G. RED CANOPY LANE USE SIGNALS FROM LANES 1, 2, 3, 4, 5, 6, 7, AND 8 DEPARTURE SIDE.
   H. PATRON FARE DISPLAY
   I. ISLAND TRAFFIC LIGHTS AND MOUNTING POLES
   J. LIGHT CURTAINS, HEIGHT DETECTORS AND ENCLOSURES
   K. VIOLATION ENFORCEMENT SYSTEM (VES CAMERAS, LIGHTS AND MOUNTING HARDWARE AND PEDESTALS)

3. THE CONTRACTOR SHALL SALVAGE FROM LANES 3, 4, 5, AND 6 THE FOLLOWING ITEMS AND DELIVER TO THE TRANSCORE WAREHOUSE AT TRANSCORE INC., 1190 RIVERSIDE ST. SUITE 3B, PORTLAND, ME:
   A. CANOPY OVERRIDE SWITCH
   B. AVI ANTENNAS
   C. TREADLE INSERT
   D. OVERHEAD SCANNER IF PRESENT
   E. LANE CONTROLLERS

4. TRANSCORE SHALL PROVIDE THE FOLLOWING ITEMS TO BE INSTALLED BY THE CONTRACTOR:
   A. VCARS CAMERAS
   B. ENCLOSURES AND MOUNTING KITS FOR VCARS
   C. IVIS LOOP SENSORS AND ASSOCIATED TEMPLATES FOR CUTTING CONCRETE (EXCEPT HALF DIAMOND SENSORS)
   D. LOCTITE EPOXY AND MACHINE FOR INSTALLATION OF EPOXY FOR LOOPS
   E. 2 ORT HOFFMAN CABINETS (TUNNEL ENCLOSURES)
   F. MOUNTING CLEATS FOR ORT CABINETS
   G. COSTAR ENCLOSURES AND PELCO MOUNTING HOOKS FOR DVAS CAMERAS

5. THE CONTRACTOR SHALL PROVIDE AND INSTALL THE FOLLOWING ITEMS:
   A. AVI ANTENNA BRACKETS FOR MOUNTING TO 2" PIPE
   B. 2 ENCLOSURES FOR AVI READERS
   C. ALL REQUIRED JUNCTION BOXES, CONDUIT AND ASSOCIATED WIRING
   D. LEVELING PAD FOR ORT CABINETS
   E. HOMERUN CABLES FOR IVIS LOOP SENSORS
   F. WIRING FOR HALF DIAMOND SENSORS

6. THE FOLLOWING ITEMS ARE TO REMAIN:
   A. UPS AND CLEAN POWER PANEL IN TUNNEL

7. THE MAINE TURNPIKE SHALL PROVIDE THE FOLLOWING ITEMS TO BE INSTALLED BY THE CONTRACTOR:
   A. 10 AVI ANTENNAS AND LANE KITS
   B. 2 AVI READERS (MTA RESPONSIBLE FOR LANE TUNING AND READER SYNCHRONIZATION)

8. TRANSCORE SHALL PROVIDE, INSTALL AND TERMINATE THE FOLLOWING ITEMS:
   A. DVAS CAMERAS
   B. NEW ORT LANE SERVERS AND ASSOCIATED CONTROLLERS AND SWITCHES
   C. ADDITIONAL UPS IF REQUIRED OR PREFERRED BY TRANSCORE

9. TRANSCORE SHALL REMOVE AND SALVAGE THE FOLLOWING ITEMS:
   A. MANUAL LANE TERMINAL
   B. RF MODULES FROM EXISTING AVI READER
   C. RECEIPT PRINTERS
   D. LANE CONTROLLER COMPUTERS FROM LANE CONTROLLER ENCLOSURES

10. THE CONTRACTOR SHALL SUBMIT A PROPOSED METHOD OF ATTACHING ALL ANCILLARY COMPONENTS TO THE SPACE FRAME TO THE RESIDENT FOR APPROVAL. THE PROPOSED ATTACHMENT METHOD SHALL NOT REQUIRE DRILLING, WELDING OR OTHER ATTACHMENT METHODS THAT WILL DAMAGE THE SPACE FRAME OR ITS GALVANIZED COATING. ANY AREAS OF GALVANIZED COATING THAT ARE DAMAGED BY THE CONTRACTOR DURING INSTALLATION OF ANCILLARY COMPONENTS SHALL BE REPAIRED IN ACCORDANCE WITH ASTM A780.

11. THE CONTRACTOR SHALL SALVAGE THE FOLLOWING ITEMS AND DELIVER TO MAINE TURNPIKE SIGN SHOP AT MILE MARKER 58.3 NB:
   A. ALL CANOPY SUSPENDED CEILING PANELS NOT REUSED
   B. ALL CANOPY STRUCTURAL STEEL
   C. ALL CANOPY FASCIA MATERIAL NOT REUSED

12. ALL IVIS SENSOR LOOPS SHALL HAVE AN EPOXY OVERLAY PER SECTION 515 OF SPECIAL PROVISIONS

TOLLING - CASH LANE UPGRADES

1. THE CONTRACTOR SHALL REMOVE AND LEGALLY DISPOSE THE FOLLOWING ITEMS:
   A. TREADLE FRAMES
   B. LANE CONTROLLER ENCLOSURE

2. THE CONTRACTOR SHALL SALVAGE THE FOLLOWING ITEMS AND DELIVER TO THE MAINE TURNPIKE SIGN SHOP AT MILE MARKER 58.3 NB
   A. ISLAND TRAFFIC LIGHTS AND MOUNTING POLES
   B. LIGHT CURTAINS, HEIGHT DETECTORS AND ENCLOSURES
   C. PATRON FARE DISPLAY
   D. RED/GREEN CANOPY LANE USE SIGNALS

3. THE CONTRACTOR SHALL SALVAGE THE FOLLOWING ITEMS AND DELIVER TO TRANSCORE'S WAREHOUSE AT TRANSCORE INC., 1190 RIVERSIDE ST. SUITE 3B, PORTLAND, ME:
   A. TREADLE INSERTS
   B. OVERHEAD SCANNER IF PRESENT

4. TRANSCORE SHALL PROVIDE THE FOLLOWING ITEMS TO BE INSTALLED BY THE CONTRACTOR:
   A. PELCO MOUNTING HOOK FOR THE DVAS CAMERA
   B. IVIS LOOP SENSORS AND ASSOCIATED TEMPLATES FOR CUTTING CONCRETE
   C. LOCTITE EPOXY AND MACHINE FOR INSTALLATION OF EPOXY FOR LOOPS
   D. 2 COPPER SWITCHES WITH FIBER TRUNK PORTS

5. THE CONTRACTOR SHALL PROVIDE AND INSTALL THE FOLLOWING ITEMS:
   A. ALL REQUIRED JUNCTION BOXES, CONDUIT AND ASSOCIATED COMMUNICATION AND ELECTRICAL WIRING

6. ITEMS ASSOCIATED WITH CASH LANES TO REMAIN ARE:
   A. RECEIPT PRINTER (BOOTH)
   B. AVI ANTENNA (CANOPY)
   C. CANOPY OVERRIDE SWITCH (BOOTH)
   D. AVI READER (TUNNEL)
   E. POWER AND DATA CABLING THAT CAN BE REUSED (TUNNEL, BOOTH, LANE)

7. TRANSCORE SHALL PROVIDE, INSTALL AND TERMINATE THE FOLLOWING ITEMS:
   A. DVAS CAMERA AND COSTAR ENCLOSURE
   B. NEW LANE AND ASSOCIATED CONTROLLERS AND NETWORK SWITCHES
   C. TRAFFIC CONTROL PEDESTAL (PROVIDE AND TERMINATE ONLY)
   D. LANE CONTROLLER ENCLOSURE AND METAL CLEATS
   E. MANUAL LANE TERMINAL

8. TRANSCORE SHALL REMOVE AND SALVAGE THE FOLLOWING ITEMS:
   A. MANUAL LANE TERMINAL
   B. VIOLATION ENFORCEMENT AND SYSTEM CONTROLLER AND CABINET
   C. EXISTING LANE CONTROLLER

9. FOR LANES 1, 2, 7 AND 8, THE CONTRACTOR SHALL REPLACE EXISTING RED AND GREEN LANE USE SIGNALS WITH A RED "X" AND A GREEN ARROW IN ACCORDANCE WITH CHAPTER 4 OF THE "MANUAL ON UNIFORM TRAFFIC CONTROL DEVICES", U.S.D.O.T., F.H.W.A., LATEST EDITION. THIS WORK SHALL BE PAID FOR UNDER ITEM 655.711.

10. ALL IVIS SENSOR LOOP SHALL HAVE AN EPOXY OVERLAY PER SECTION 515 OF SPECIAL PROVISIONS

OPEN ROAD TOLLING (ORT)

1. IF THE FINAL LIFT OF PAVEMENT IS NOT IN PLACE DURING THE TESTING OF THE ORT LANES, THE CONTRACTOR SHALL PROVIDE TEMPORARY RAMPS AT THE TRANSITION FROM THE ASPHALT BASE COURSE TO THE ORT CONCRETE SLABS AND FROM THE ASPHALT BASE COURSE TO THE EXISTING PAVEMENT. THESE SHALL BE 100 FEET IN LENGTH THE ENTIRE WIDTH OF PAVEMENT. TEMPORARY RAMPS SHALL BE CONSTRUCTED USING THE SAME MATERIAL AS BEING PLACED ON THAT DAY OR AS APPROVED BY THE RESIDENT. ALL TEMPORARY RAMPS ARE TO BE CONSTRUCTED ON A SAND JOINT. THE CONTRACTOR SHALL BE RESPONSIBLE FOR ALL REPAIRS AND MAINTENANCE REQUIRED FOR THE TEMPORARY RAMPS. ALL WORK ASSOCIATED WITH THE RAMPS SHALL BE INCIDENTAL TO THE PAVEMENT ITEMS.

Date:2/13/2015

Filename: 004_General Notes2.dgn

No.	Revision	By	Date

Scale:

Designed by: HNTB

CONSULTANT PROJECT MANAGER: R. Bruce Munger, P.E.

	By	Date		By	Date
Designed	BPM	02/15	Checked	LZD	02/15
Drawn	MPC	02/15	In Charge of	RAL	02/15

HNTB CORPORATION
340 County Road, Suite 6-C
Westbrook, ME 04092
TEL (207) 774-5155
FAX (207) 228-0909

MAINE TURNPIKE

THE GOLD STAR MEMORIAL HIGHWAY

MTA PROJECT MANAGER: William Yates

WEST GARDINER BARRIER TOLL PLAZA
ORT CONVERSION

GENERAL NOTES 2

SHEET NUMBER: GN-02

CONTRACT:2015.11

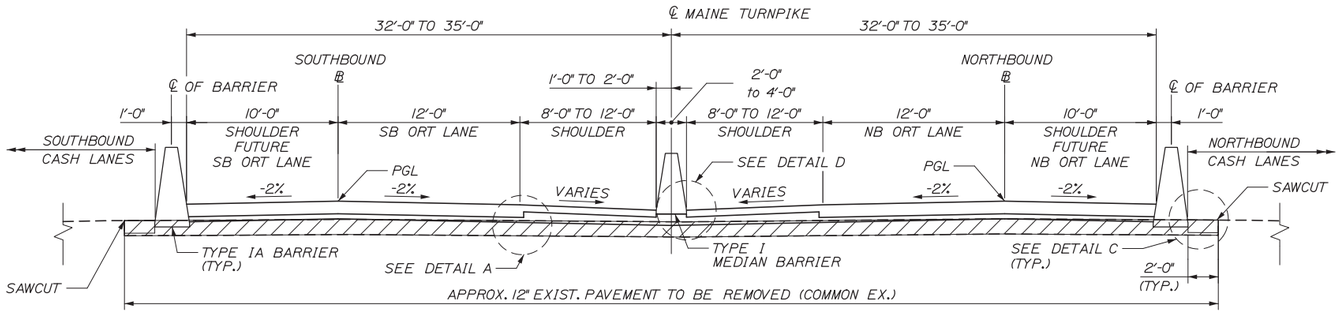

SOUTHBOUND
(STA. 5110+75.00 TO STA. 5114+92.00)
(STA. 5116+65.00 TO STA. 5121+50.00)

NORTHBOUND
(STA. 5110+75.00 TO STA. 5115+35.00)
(STA. 5117+08.00 TO STA. 5121+50.00)

FULL DEPTH PAVEMENT EXCAVATION

1" = 5'

GENERAL NOTES

1. THE PAVEMENT, BASE AND SUBBASE DEPTHS AS SHOWN ON THE PLANS ARE INTENDED TO BE NOMINAL.
2. CROWNS FOR ALL COURSES OF SUBBASE AND PAVEMENT SHALL BE STRAIGHT.
3. ALL NECESSARY PAVEMENT CUTTING SHALL BE SAWCUT AND DONE IN SUCH A MANNER AS TO LEAVE A CLEAN, VERTICAL FACE.
4. BITUMINOUS TACK COAT IS REQUIRED BETWEEN ALL LIFTS OF PAVEMENT OR AS DIRECTED BY THE RESIDENT. BITUMINOUS TACK COAT IS REQUIRED ON ALL EXISTING PAVED OR MILLED SURFACES PRIOR TO PLACING PROPOSED PAVEMENT.
5. THE CONTRACTOR WILL NOT BE PERMITTED TO GRIND OUT OR PLACE TEMPORARY PAINTED PAVEMENT MARKINGS ON FINAL SURFACE LIFT OF PAVEMENT. THE SURFACE LIFT SHALL BE PLACED AS THE FINAL CONSTRUCTION PHASE ONCE CONCRETE BARRIER HAS BEEN INSTALLED.
6. COAT SURFACE MIX VERTICAL FACE WITH HOT RUBBERIZED ASPHALT, COAT BASE MIX VERTICAL FACE WITH TACK COAT (INCIDENTAL TO PAVEMENT ITEMS).
7. SEE GENERAL PLANS FOR TYPE AND LIMITS OF BARRIER.

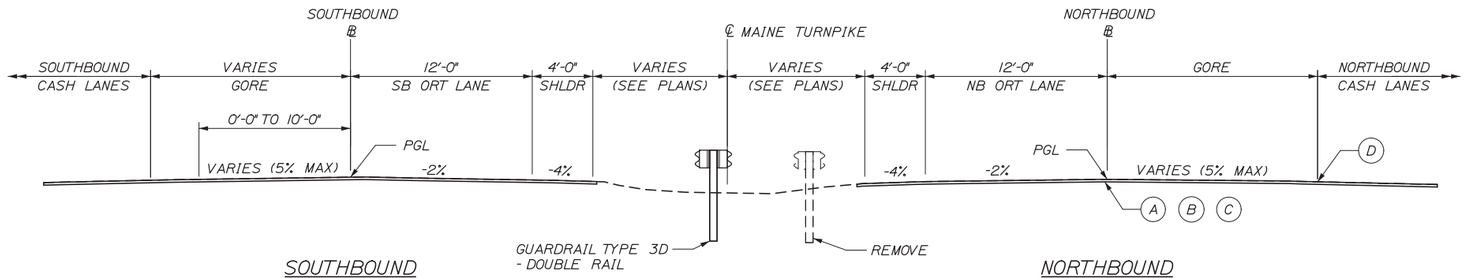

SOUTHBOUND
(STA. 5107+00.00 TO STA. 5110+75.00)
(STA. 5121+50.00 TO STA. 5125+00.00)

NORTHBOUND
(STA. 5107+00.00 TO STA. 5110+75.00)
(STA. 5121+50.00 TO STA. 5125+00.00)

MILL AND PAVE

1" = 5'

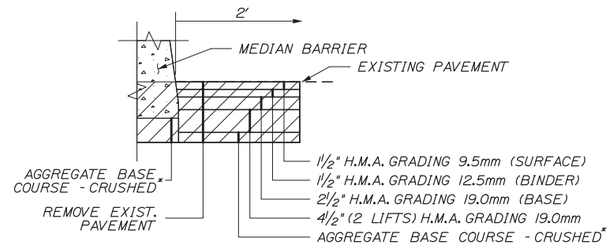

DETAIL C

NOTE:
*AS REQUIRED (SEE CROSS SECTIONS)
ALL HMA LIFTS FOR DETAIL C SHALL BE PAID FOR AS ITEM 403.209.

PAVEMENT LEGEND

(A) = 1½ HOT MIX ASPHALT, 12.5MM (POLYMER MODIFIED)

(B) = 1½ HOT MIX ASPHALT SHIMMING 4.75 MM ITEM 403.201

(C) = MILLING DEPTH VARIES CONTROLLED BY CROSS SLOPE (2" MAX)

(D) = HOT RUBBERIZED ASPHALT JOINT

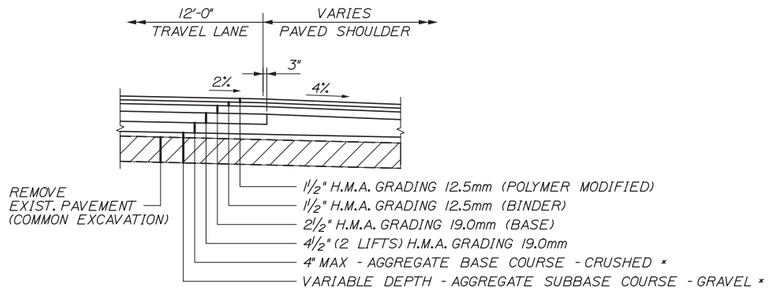

DETAIL A

* AS REQUIRED (SEE CROSS SECTIONS)

½" = 1'-0"

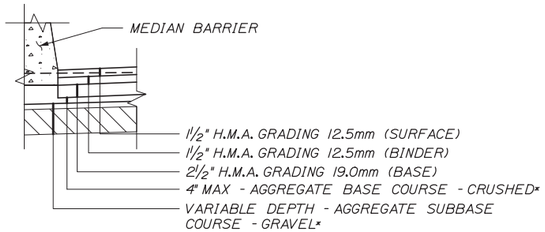

* AS REQUIRED (SEE CROSS SECTIONS)

DETAIL D

Date:2/13/2015

Filename: 005_Typ Sections 1.dgn

No.	Revision	By	Date

Scale:

Designed by: HNTB

CONSULTANT PROJECT MANAGER: R. Bruce Munger, P.E.

	By	Date		By	Date
Designed	LZD	02/15	Checked	TMH	02/15
Drawn	MPC	02/15	In Charge of	RAL	02/15

HNTB CORPORATION
340 County Road, Suite 6-C
Westbrook, ME 04092
TEL (207) 774-5155
FAX (207) 228-0909

MAINE TURNPIKE

THE GOLD STAR MEMORIAL HIGHWAY

MTA PROJECT MANAGER: William Yates

WEST GARDINER BARRIER TOLL PLAZA ORT CONVERSION

TYPICAL SECTIONS 1

SHEET NUMBER: TYP-01

CONTRACT:2015.11

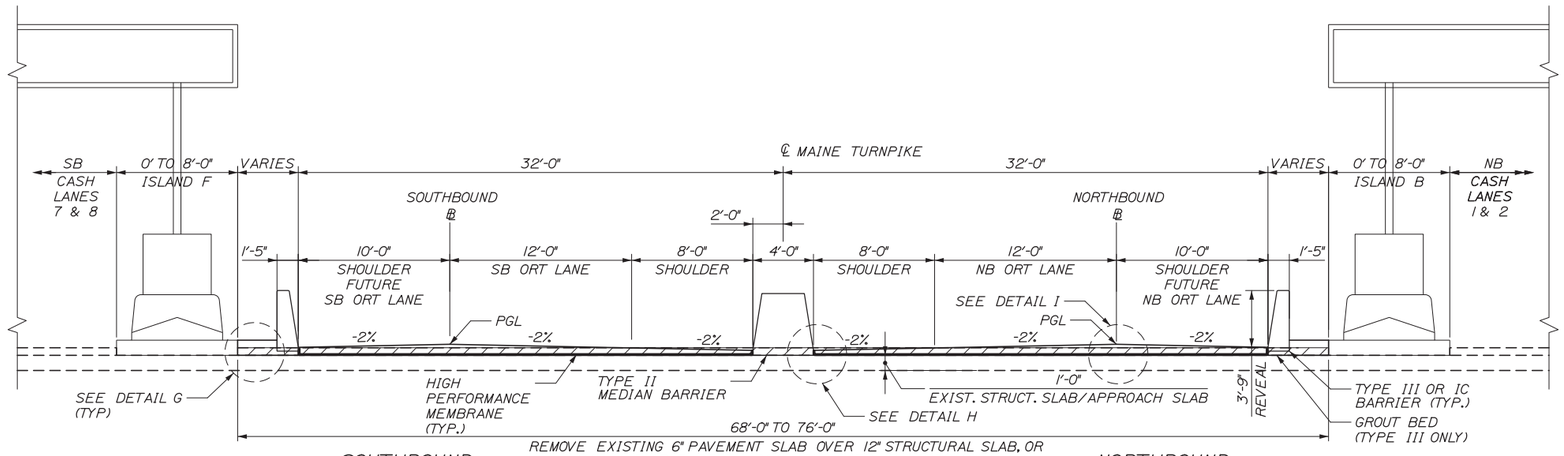

SOUTHBOUND
(STA. 5115+55.00 TO STA. 5116+65.00)

NORTHBOUND
(STA. 5115+35.00 TO STA. 5116+45.00)

SHIMMING AND PAVING AT PLAZA

1" = 5'

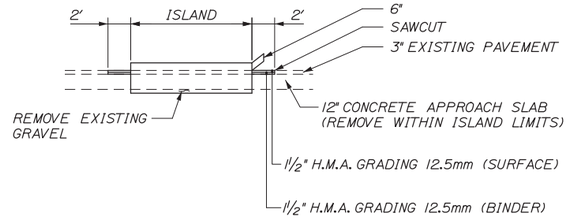

EXTENDED ISLAND
(WITHIN APPROACH SLAB LIMITS)

NOTE:
1. SPACE FRAME FOUNDATIONS NOT SHOWN. SEE STRUCTURAL PLANS FOR FOUNDATION AND ISLAND DETAILS.
2. SEE GENERAL PLAN FOR LIMITS OF SAWCUT.
3. ALL HMA LIFTS FOR THE EXTENDED ISLAND DETAIL SHALL BE PAID FOR AS ITEM 403.209

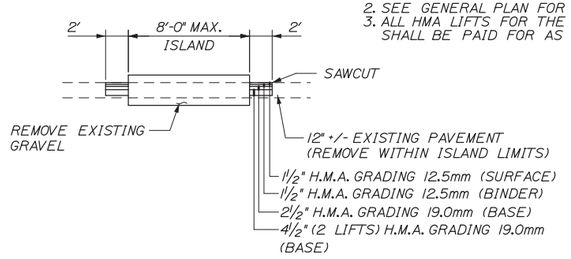

EXTENDED ISLAND
(NB STA. 216+25 TO STA. 216+99)
(SB STA. 115+01 TO STA. 115+75)

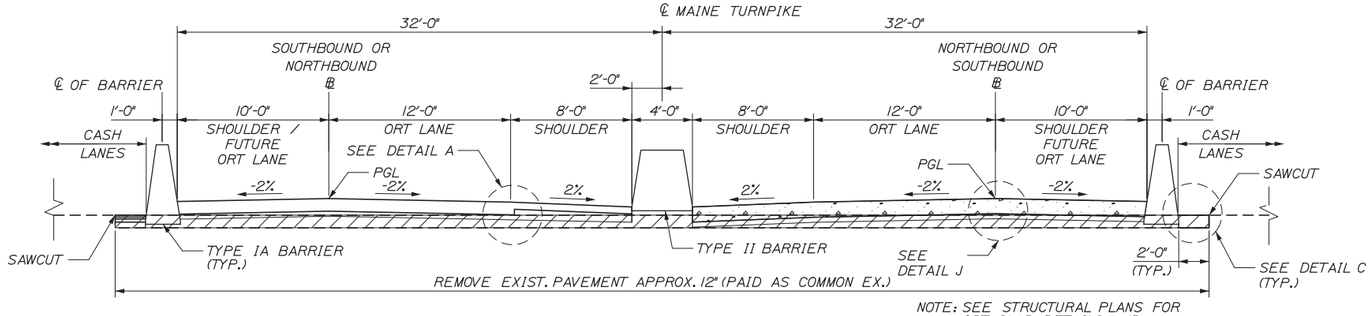

NOTE: SEE STRUCTURAL PLANS FOR ORT SLAB DETAILS AND LIMITS OF APPROACH SLAB DEMOLITION

NORTHBOUND
(STA. 5116+45.00 TO STA. 5117+08.00)

SOUTHBOUND (MIRRORED ABOUT TURNPIKE ℄)
(STA. 5114+92.00 TO STA. 5115+55.00)

1" = 5'

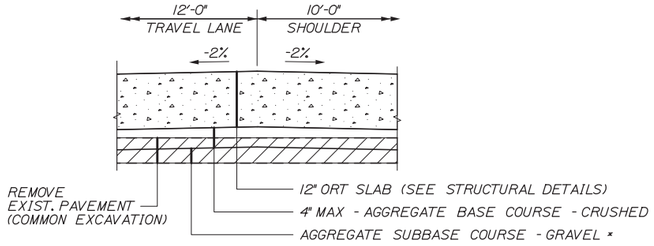

* AS REQUIRED (SEE CROSS SECTIONS)

DETAIL J

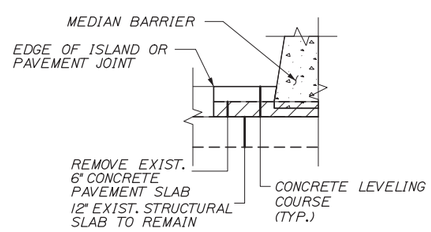

NOTE: TOP OF CONCRETE LEVELING COURSE SHALL MATCH TOP OF ISLAND OR CONCRETE PAVEMENT SLAB.

DETAIL G

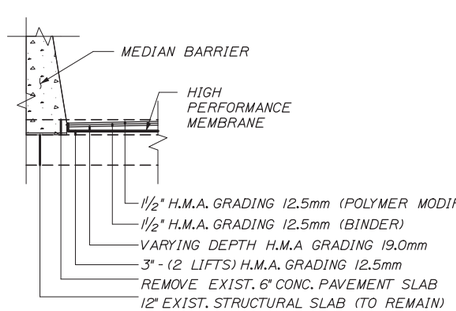

DETAIL H

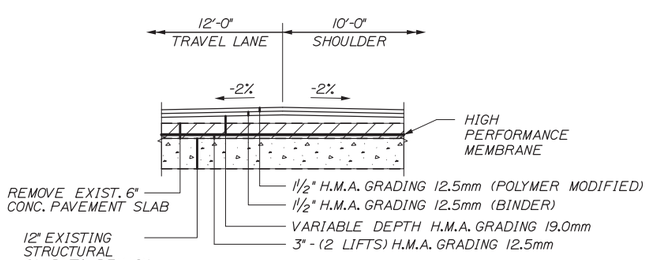

DETAIL I * AS REQUIRED (SEE CROSS SECTIONS)

SEE DETAIL A PR-02 FOR PAVEMENT INTERFACE WITH APPROACH SLAB

Date:2/13/2015

Filename: 006_Typ Sections II.dgn

Scale:				Designed by: HNTB					
No.	Revision	By	Date	CONSULTANT PROJECT MANAGER: R. Bruce Munger, P.E.					
					By	Date		By	Date
				Designed	LZD	02/15	Checked	TMH	02/15
				Drawn	MPC	02/15	In Charge of	RAL	02/15

HNTB CORPORATION
340 County Road, Suite 6-C
Westbrook, ME 04092
TEL (207) 774-5155
FAX (207) 228-0909

MAINE TURNPIKE

THE GOLD STAR MEMORIAL HIGHWAY

MTA PROJECT MANAGER: William Yates

WEST GARDINER BARRIER TOLL PLAZA ORT CONVERSION

TYPICAL SECTIONS 2

SHEET NUMBER: TYP-02

CONTRACT:2015.11

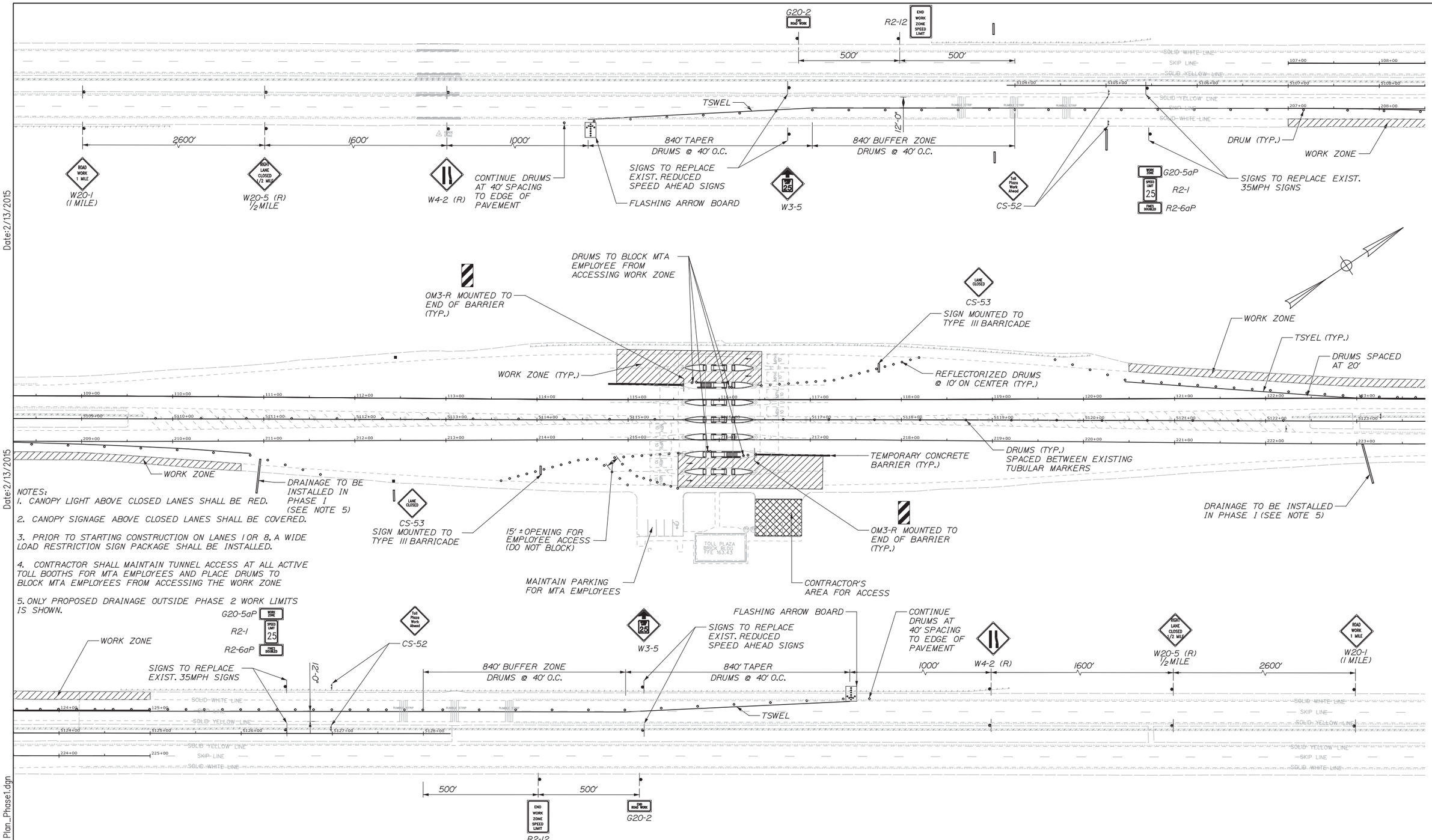

NOTES:
1. CANOPY LIGHT ABOVE CLOSED LANES SHALL BE RED.
2. CANOPY SIGNAGE ABOVE CLOSED LANES SHALL BE COVERED.
3. PRIOR TO STARTING CONSTRUCTION ON LANES 1 OR 8, A WIDE LOAD RESTRICTION SIGN PACKAGE SHALL BE INSTALLED.
4. CONTRACTOR SHALL MAINTAIN TUNNEL ACCESS AT ALL ACTIVE TOLL BOOTHS FOR MTA EMPLOYEES AND PLACE DRUMS TO BLOCK MTA EMPLOYEES FROM ACCESSING THE WORK ZONE
5. ONLY PROPOSED DRAINAGE OUTSIDE PHASE 2 WORK LIMITS IS SHOWN.

Date:2/13/2015

Date:2/13/2015

Filename: 007_Traffic ControlPlan_Phase1.dgn

Scale: 50 0 50 100
1" = 50'

No.	Revision	By	Date

Designed by:

HNTB

CONSULTANT PROJECT MANAGER: R. Bruce Munger, P.E.

	By	Date		By	Date
Designed	TMH	02/15	Checked	LZD	02/15
Drawn	MPC	02/15	In Charge of	RAL	02/15

HNTB CORPORATION
340 County Road, Suite 6-C
Westbrook, ME 04092
TEL (207) 774-5155
FAX (207) 228-0909

MAINE TURNPIKE

THE GOLD STAR MEMORIAL HIGHWAY

MTA PROJECT MANAGER: William Yates

WEST GARDINER BARRIER TOLL PLAZA
ORT CONVERSION

MAINTENANCE OF TRAFFIC
PHASE 1

SHEET NUMBER: TC-01

CONTRACT:2015.11

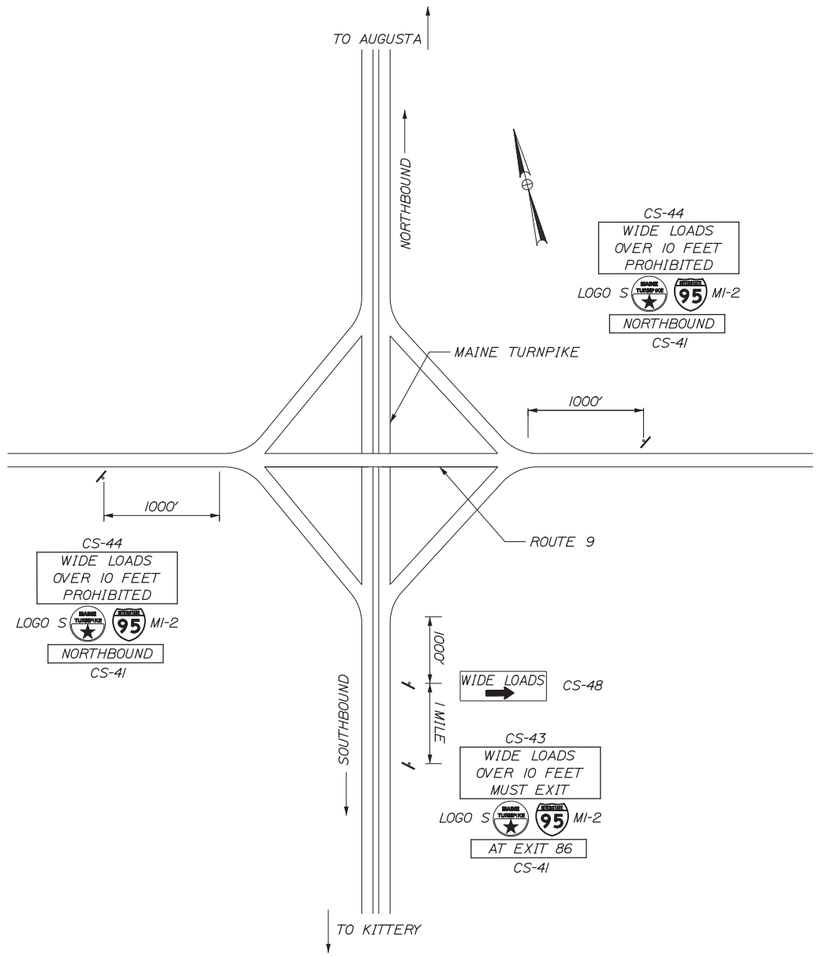

INTERCHANGE 86
SABATTUS

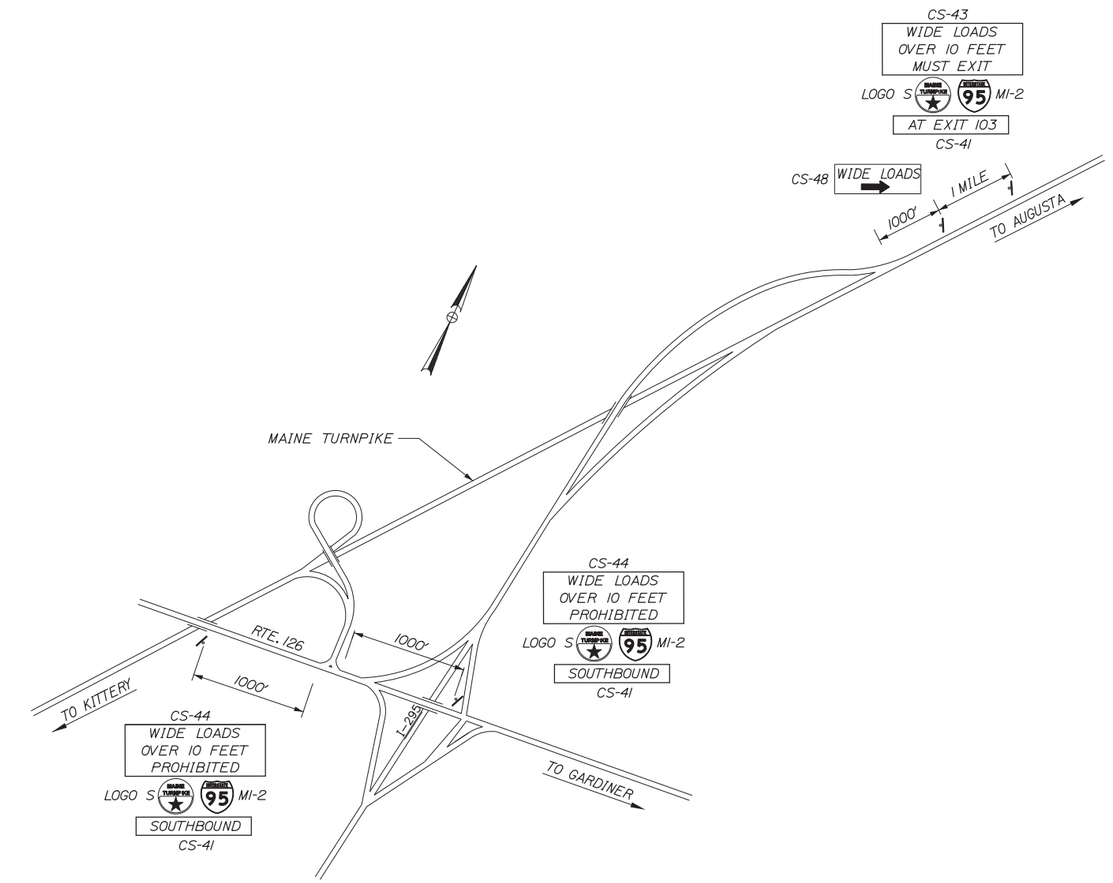

INTERCHANGE 102 & 103
WEST GARDINER

WIDE LOAD SIGN LOCATIONS

GENERAL MAINTENANCE OF TRAFFIC NOTES:

1. ALL WORK TO CONFORM TO MAINE DEPARTMENT OF TRANSPORTATION STANDARD SPECIFICATIONS FOR HIGHWAY AND BRIDGES REVISIONS OF DECEMBER 2002. EXCEPT AS MODIFIED BY THE MAINE TURNPIKE AUTHORITY'S GENERAL AND SPECIAL PROVISIONS.
2. THESE PLANS SHOW THE GENERAL CONDITION FOR TURNPIKE MAINLINE TRAFFIC CONTROL DURING CONSTRUCTION. SLIGHT MODIFICATIONS IN CONSTRUCTION PROCEDURE MAY OCCUR AND MAY REQUIRE SOME MINOR ADJUSTMENTS TO BE MADE IN THE FIELD. ALL PROCEDURES MUST BE APPROVED BY THE RESIDENT.
3. ALL SIGNS TO BE MOUNTED ON NCHRP 350 APPROVED POSTS UNLESS BEHIND GUARDRAIL.
4. INSTALL WIDE LOAD PROHIBITED SIGNS PRIOR TO PHASE I CONSTRUCTION.
5. SEE SPECIAL PROVISIONS SECTION 104.4.7 COOPERATION WITH OTHER CONTRACTORS FOR INFORMATION ON CONSTRUCTION PROJECTS WITHIN AREAS WHERE WIDE LOAD SIGNS WILL BE INSTALLED.

Date:2/13/2015

Filename: 008_Wide Load Restriction_Phase1.dgn

Scale:

No.	Revision	By	Date

Designed by: HNTB

CONSULTANT PROJECT MANAGER: R. Bruce Munger, P.E.

	By	Date		By	Date
Designed	TMH	02/15	Checked	LZD	02/15
Drawn	PMK	02/15	In Charge of	RAL	02/15

HNTB CORPORATION
340 County Road, Suite 6-C
Westbrook, ME 04092
TEL (207) 774-5155
FAX (207) 228-0909

MAINE TURNPIKE

THE GOLD STAR MEMORIAL HIGHWAY

MTA PROJECT MANAGER: William Yates

WEST GARDINER BARRIER TOLL PLAZA ORT CONVERSION

MAINTENANCE OF TRAFFIC WIDE LOAD RESTRICTION SIGN PLAN

SHEET NUMBER: TC-02

CONTRACT:2015.11

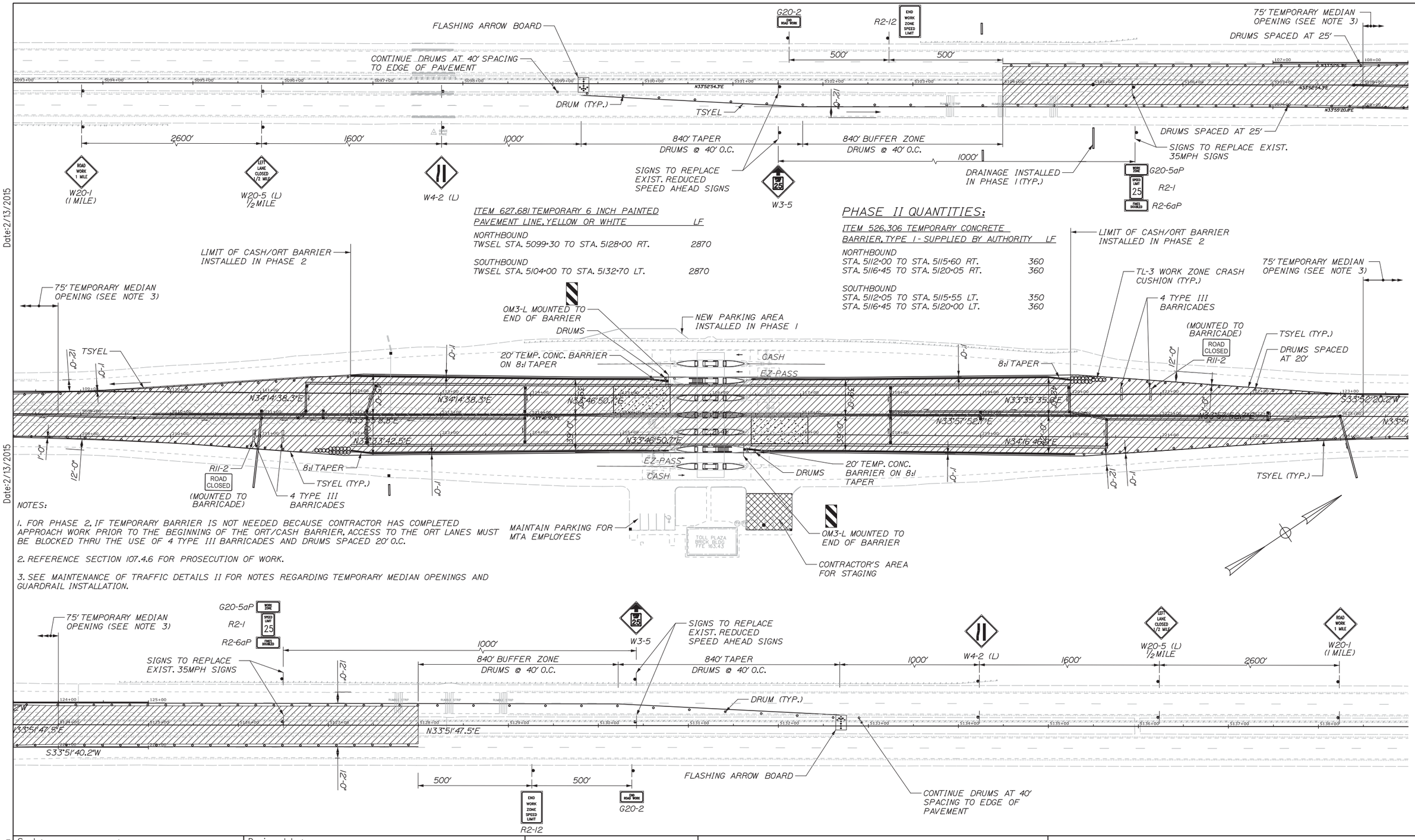

Date:2/13/2015

Date:2/13/2015

Filename: 009_TC2Plan1.dgn

Scale: 50 0 50 100
1" = 50'

No.	Revision	By	Date

Designed by: HNTB

CONSULTANT PROJECT MANAGER: R. Bruce Munger, P.E.

	By	Date		By	Date
Designed	TMH	02/15	Checked	CDH	02/15
Drawn	CDH	02/15	In Charge of	RAL	02/15

HNTB CORPORATION
340 County Road, Suite 6-C
Westbrook, ME 04092
TEL (207) 774-5155
FAX (207) 228-0909

MAINE TURNPIKE

THE GOLD STAR MEMORIAL HIGHWAY

MTA PROJECT MANAGER: William Yates

WEST GARDINER BARRIER TOLL PLAZA ORT CONVERSION

MAINTENANCE OF TRAFFIC PHASE 2

SHEET NUMBER: TC-03

CONTRACT:2015.11

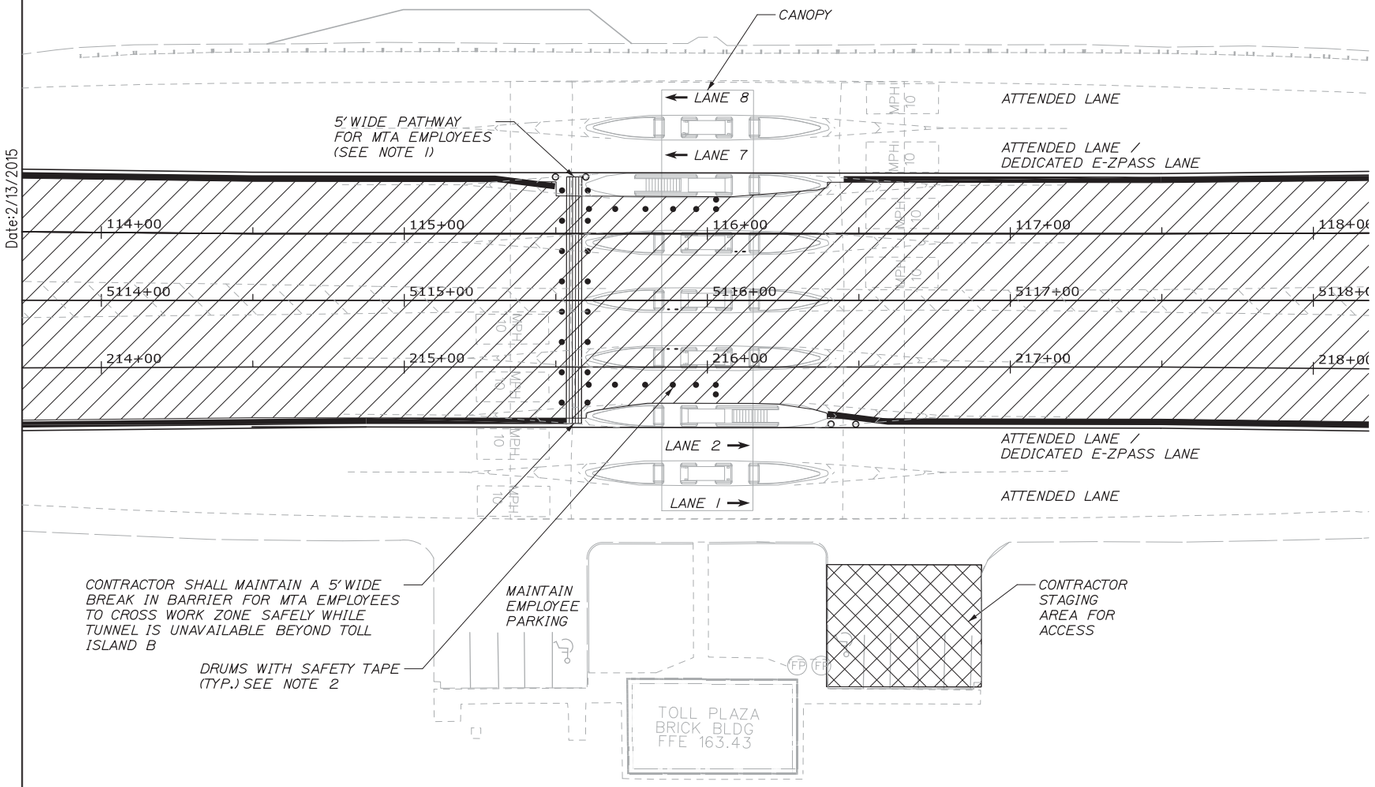

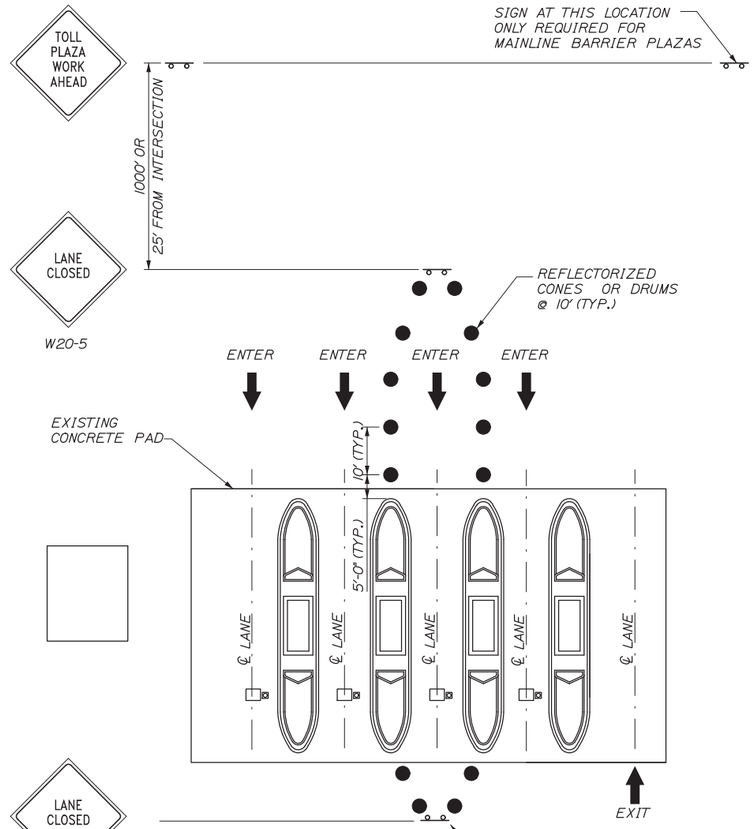

NOTES:

1. PATH FOR MTA EMPLOYEES SHALL BE LIGHTED FROM DUSK TO DAWN, FREE OF TRIP AND FALL HAZARDS AND HAVE CONES DESIGNATING THE PATH. LIGHTING SHALL BE SUITABLE FOR AN OUTSIDE ENVIRONMENT AND NOT BECOME A WIND OR ELECTRIC HAZARD.
2. CONTRACTOR SHALL MAINTAIN 5' PATH WITH DRUMS AND SAFETY TAPE TO PROVIDE SECONDARY EGRESS POINTS FOR BOOTHS WHILE ADJACENT LANES 2 AND 7 ARE MANNED BY MTA EMPLOYEES.
3. LIGHTING AND SAFETY TAPE SHALL BE INCIDENTAL TO ITEM 659.10 MOBILIZATION.
4. REFER TO APPENDIX C FOR PLAZA SAFETY REQUIREMENTS.

NOTES:

1. A SINGLE LANE CLOSURE IS REQUIRED FOR CONSTRUCTION AND MAINTENANCE WORK IN THE LANE OR ON AN ISLAND.
2. CANOPY LIGHT ABOVE CLOSED LANE SHALL BE RED.
3. ALL CONSTRUCTION SIGNS SHALL BE 4'X4'.
4. ALL CONSTRUCTION SIGNS MAY BE MOUNTED ON EASELS.

Date:2/13/2015

Filename: 010_TrafficControlPhase2_EmployeeAccess.dgn

Scale:

No.	Revision	By	Date

Designed by: HNTB

CONSULTANT PROJECT MANAGER: R. Bruce Munger, P.E.

	By	Date		By	Date
Designed	TMH	02/15	Checked	LZD	02/15
Drawn	PMK	02/15	In Charge of	RAL	02/15

HNTB CORPORATION
340 County Road, Suite 6-C
Westbrook, ME 04092
TEL (207) 774-5155
FAX (207) 228-0909

MAINE TURNPIKE

THE GOLD STAR MEMORIAL HIGHWAY

MTA PROJECT MANAGER: William Yates

WEST GARDINER BARRIER TOLL PLAZA ORT CONVERSION

MAINTENANCE OF TRAFFIC PHASE 2 - PLAZA

SHEET NUMBER: TC-04

CONTRACT:2015.11

Date:2/13/2015

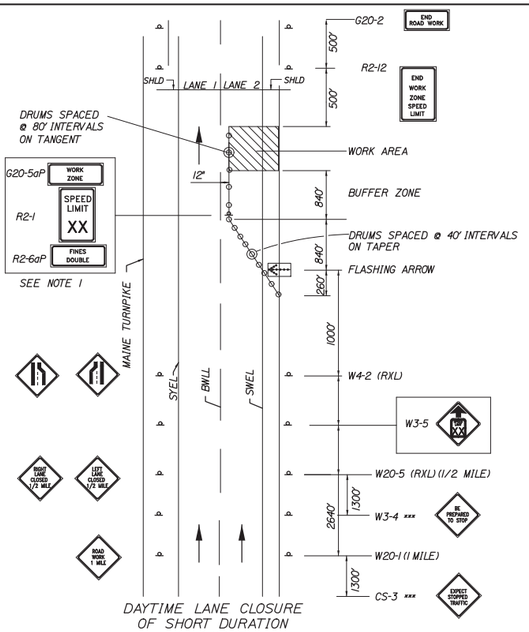

DAYTIME LANE CLOSURE OF SHORT DURATION (MAINLINE)

SINGLE LANE CLOSURE SIGNS ON EASELS

1. FOR EASEL SET UP ONLY, THIS SIGN IS NOT BRACKETED. ONE SIGN ASSEMBLY IS PLACED AT THE END OF THE TAPER .

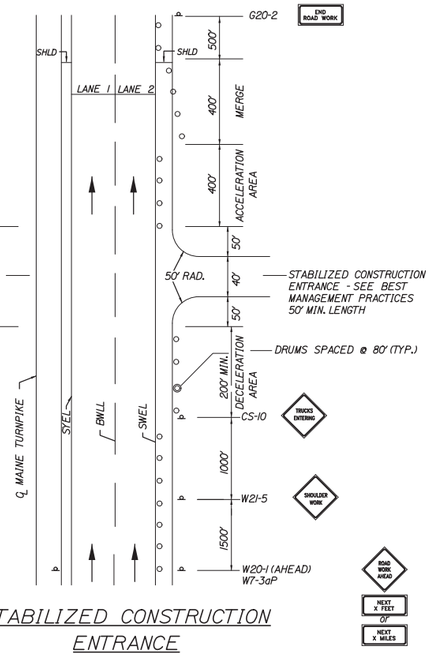

STABILIZED CONSTRUCTION ENTRANCE

1. SIGN G20-2 IS NOT REQUIRED IF ENTRANCE IS WITHIN THE WORK ZONE.

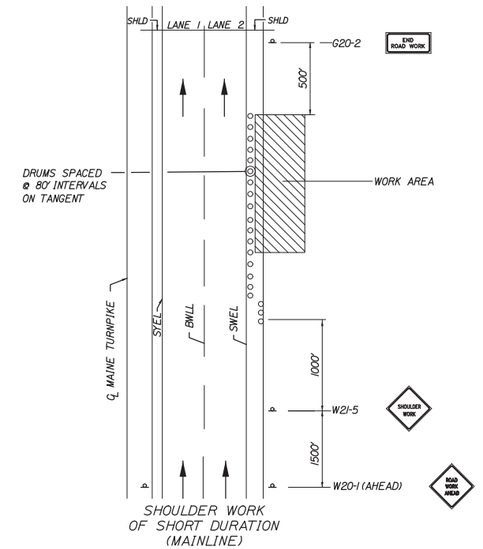

SHOULDER WORK OF SHORT DURATION (MAINLINE)

SHOULDER WORK

1. THE W20-1 AND G20-2 SIGNS ARE NOT REQUIRED IF THE SHOULDER CLOSURE IS WITHIN A PREVIOUSLY ESTABLISHED WORK ZONE.

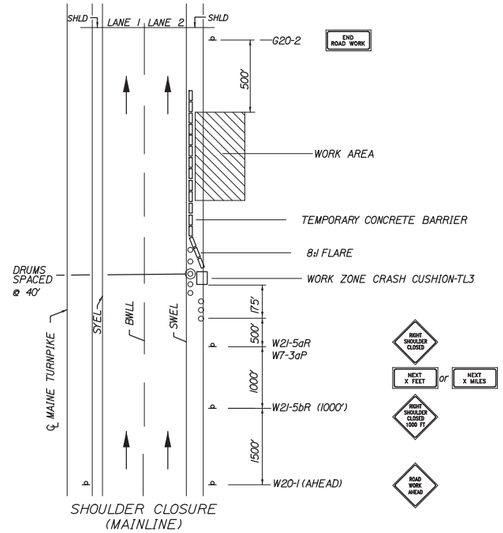

SHOULDER CLOSURE (MAINLINE)

SHOULDER CLOSURE

1. THE W20-1 AND G20-2 SIGNS ARE NOT REQUIRED IF THE SHOULDER CLOSURE IS WITHIN A PREVIOUSLY ESTABLISHED WORK ZONE.

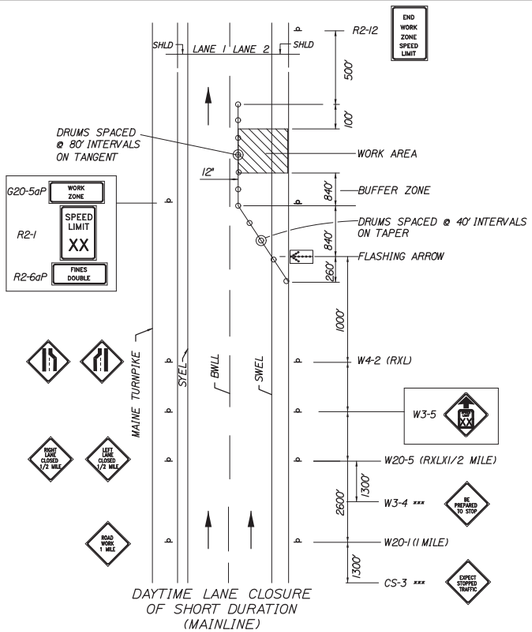

DAYTIME LANE CLOSURE OF SHORT DURATION (MAINLINE)

SINGLE LANE CLOSURE - POST MOUNTED SIGN SETUP

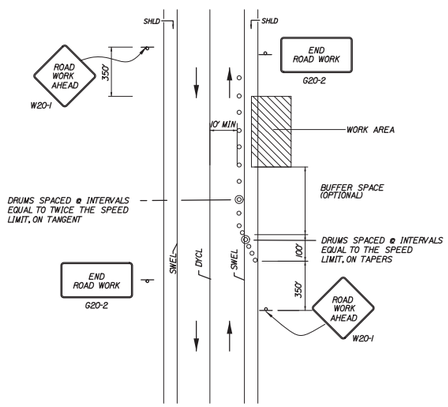

TEMP. LOCAL ROAD SHOULDER CLOSURE

1. FOR SHORT DURATION WORK (<1 HOUR), THE TAPER AND CHANNELIZATION DEVICES MAY BE OMITTED IF SHADOW VEHICLE IS PRESENT WITH ACTIVATED HIGH-INTENSITY ROTATING, FLASHING, OSCILLATING OR STROBE LIGHTS.

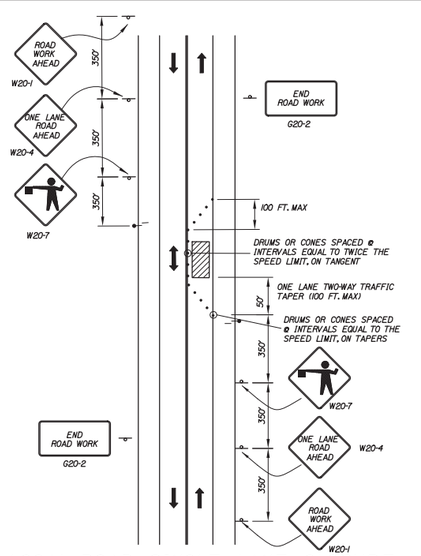

LOCAL ROAD SINGLE LANE CLOSURE

1. ROAD WORK AHEAD & END ROAD WORK SIGNS MAY BE OMITTED FOR SHORT DURATION OPERATIONS (LESS THAN 1 HOUR).
2. FLAGGERS SHALL BE LOCATED SO THEY ARE CLEARLY VISIBLE TO APPROACHING DRIVERS.
3. SIGN SPACING ASSUMES LOCAL ROAD SPEED IS 40 MPH OR LESS.

ABBREVIATIONS FOR ALL M.O.T. PLANS

BWLL = BROKEN WHITE LANE LINE
SWEL = SOLID WHITE EDGE LINE
SYEL = SOLID YELLOW EDGE LINE
TBWLL - TEMPORARY BROKEN WHITE LANE LINE
TSWEL = TEMPORARY SOLID WHITE EDGE LINE
TSYEL = TEMPORARY SOLID YELLOW EDGE LINE

GENERAL NOTES

1. FOR SIGN DETAILS, SEE MAINTENANCE OF TRAFFIC SIGN SUMMARY SHEETS.
2. "TRUCKS ENTERING" SIGN SHALL ALSO BE USED AT LOCATIONS WHERE TRUCKS ENTER THE WORK ZONE FROM THE TRAVEL LANE.
3. SIGNS DESIGNATED WITH *** SHALL BE USED DURING STOPPAGES OF TRAFFIC.
4. TRUCK MOUNTED ATTENUATOR SHALL NOT BE LOCATED WITHIN THE BUFFER ZONE.

Filename: 011_MOTDetails01.dgn

Scale:

Designed by:

HNTB

No.	Revision	By	Date

CONSULTANT PROJECT MANAGER: R. Bruce Munger, P.E.

	By	Date		By	Date
Designed	TMH	02/15	Checked	LZD	02/15
Drawn	PMK	02/15	In Charge of	RAL	02/15

HNTB CORPORATION
340 County Road, Suite 6-C
Westbrook, ME 04092
TEL (207) 774-5155
FAX (207) 228-0909

MAINE TURNPIKE

THE GOLD STAR MEMORIAL HIGHWAY

MTA PROJECT MANAGER: William Yates

WEST GARDINER BARRIER TOLL PLAZA ORT CONVERSION

MAINTENANCE OF TRAFFIC DETAILS 1

SHEET NUMBER: TC-05

CONTRACT:2015.11

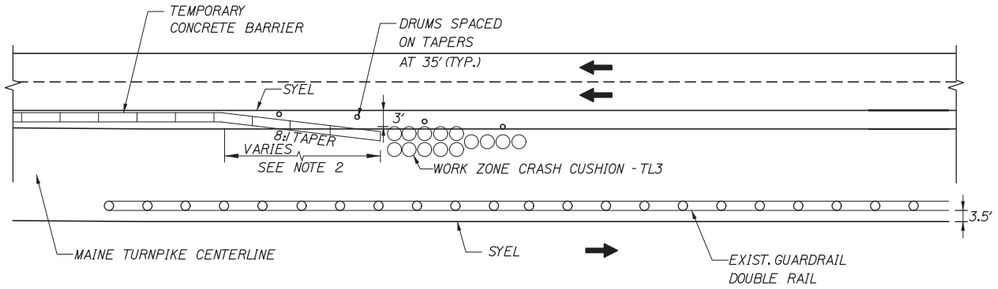

EXIST. GUARDRAIL ON FAR SIDE OF MEDIAN

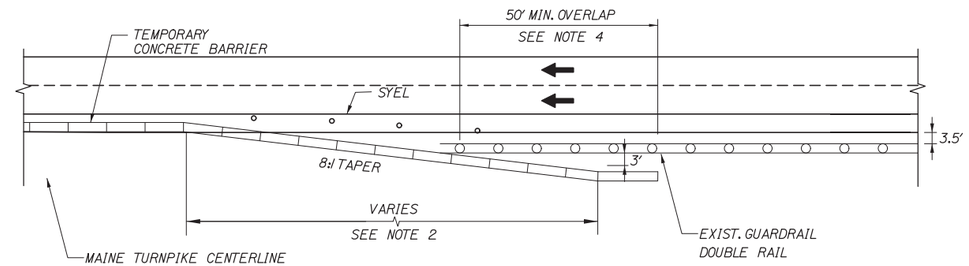

EXIST. GUARDRAIL ON NEAR SIDE OF MEDIAN

NOTES:

1. BARRIER ENDS SHALL BE PROTECTED BY A TEMPORARY WORK ZONE CRASH CUSHION OR LAPPED BEHIND GUARDRAIL.
2. 8:1 TAPERED BARRIER LENGTH IS DEPENDANT ON THE LOCATION OF THE BARRIER RELATIVE TO MAINE TURNPIKE SHOULDERS OR LANES.
3. IF A TEMPORARY WORK ZONE CRASH CUSHION IS USED, THE WORK ZONE CRASH CUSHION SYSTEM MUST BE FOUNDED ON A LEVEL SURFACE. ANY WORK NECESSARY TO PROVIDE A LEVEL SURFACE WILL BE INCIDENTAL TO THE WORK ZONE CRASH CUSHION ITEM.
4. IF THE 50' MIN. LENGTH OF OVERLAP CAN NOT BE MET THEN THE EXISTING GUARDRAIL END MUST BE ANCHORED IN ACCORDANCE WITH DRAWING SEW02a IN THE AASHTO-AGC-ARBTA JOINT COMMITTEE TASK FORCE 13 REPORT, DRAFTED MAY 1995.

CONCRETE BARRIER / GUARDRAIL OVERLAP DETAIL

NOT TO SCALE

TEMPORARY MEDIAN OPENINGS

1. CONTRACTOR SHALL MAINTAIN TWO TEMPORARY OPENINGS IN THE MEDIAN GUARDRAIL TO FACILITATE TESTING OF THE ORT LANES WITH LIVE TRAFFIC. OPENINGS SHALL REMAIN WITHIN THE ADJACENT LANE CLOSURES. OPENINGS SHALL BE 75' LONG. LIMITS ARE FROM STA. 5108+00 TO 5108+75 AND STA. 5123+25 TO STA. 5124+00.
2. CONTRACTOR SHALL PROTECT ENDS OF GUARDRAIL. CONTRACTOR SHALL PLAN GUARDRAIL INSTALLATION IN SUCH A MANNER THAT PROPOSED GUARDRAIL WITHIN THE OPENING IS INSTALLED AFTER THE PERIOD NEEDED FOR THE OPENING.
3. SEE SPECIAL PROVISIONS SECTION 107.4.6 PROSECUTION OF WORK FOR DATES REQUIRED TO MAINTAIN OPENING AND MORE INFORMATION.

GENERAL MAINTENANCE OF TRAFFIC NOTES:

1. ALL WORK TO CONFORM TO MAINE DEPARTMENT OF TRANSPORTATION STANDARD SPECIFICATIONS FOR HIGHWAY AND BRIDGES REVISION 2002, EXCEPT AS MODIFIED BY THE MAINE TURNPIKE AUTHORITY'S GENERAL AND SPECIAL PROVISIONS.
2. ALL PAVEMENT STRIPING & SIGNING SHALL BE IN ACCORDANCE WITH THE "MANUAL ON UNIFORM TRAFFIC CONTROL DEVICES", U.S.D.O.T., F.H.W.A., LATEST EDITION.
3. THESE PLANS SHOW THE GENERAL CONDITION FOR TURNPIKE MAINLINE TRAFFIC CONTROL. DURING CONSTRUCTION, SLIGHT MODIFICATIONS IN CONSTRUCTION PROCEDURE MAY OCCUR AND MAY REQUIRE SOME MINOR ADJUSTMENTS TO BE MADE IN THE FIELD, ALL PROCEDURES MUST BE APPROVED BY THE RESIDENT.
4. THE CONTRACTOR SHALL REMOVE ALL PAVEMENT MARKINGS THAT CONFLICT WITH PROPOSED PAVEMENT MARKINGS IN ACCORDANCE WITH THE SPECIFICATIONS AND MUTCD. PAYMENT SHALL BE MADE UNDER ITEM 627.77 - REMOVING EXISTING PAVEMENT MARKING.
5. TEMPORARY PAVEMENT MARKINGS SHALL BE PAINTED, UNLESS OTHERWISE NOTED. PAYMENT FOR MARKINGS SHALL BE UNDER ITEM 627.681 - TEMPORARY 6 INCH PAINTED PAVEMENT MARKING LINE, YELLOW OR WHITE.
6. ALL TEMPORARY BARRIER SHALL BE SET WITH A MINIMUM 8:1 TAPER. THE 8:1 TAPERED BARRIER LENGTH IS DEPENDENT ON THE LOCATION OF THE BARRIER RELATIVE TO THE MAINE TURNPIKE SHOULDERS OR LANES.
7. THERE SHALL BE NO TEMPORARY PAINTED PAVEMENT MARKINGS ON FINAL PAVEMENT.
8. THE AUTHORITY SHALL BE RESPONSIBLE FOR FINAL TURNPIKE STRIPING. THE CONTRACTOR SHALL LAYOUT THE STRIPING AND PROVIDE THE MAINTENANCE OF TRAFFIC CONTROL AND REMOVAL OF TEMPORARY PAVEMENT MARKINGS TO COMPLETE THIS WORK.
9. FOR SIGN DETAILS, SEE MAINTENANCE OF TRAFFIC SIGN SUMMARY SHEETS.
10. "TRUCKS ENTERING" SIGN SHALL ALSO BE USED AT LOCATIONS WHERE TRUCKS ENTER THE WORK ZONE FROM THE TRAVEL LANE.

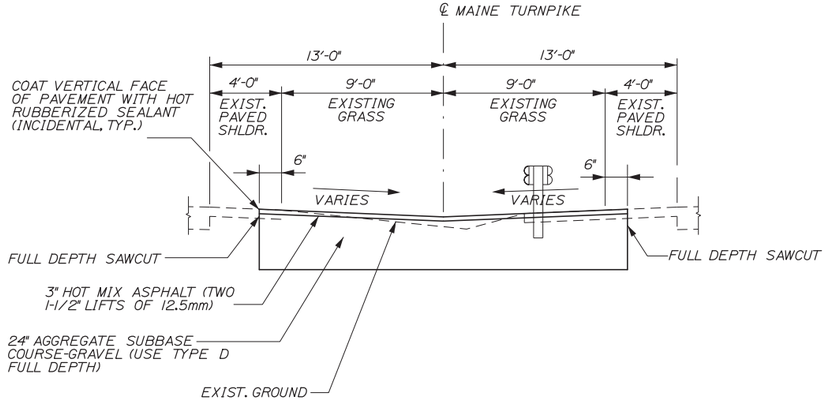

TYPICAL SECTION - MEDIAN OPENING (FULL DEPTH CONSTRUCTION)

(EXISTING GRASS MEDIAN)
NOT TO SCALE

MEDIAN OPENING NOTES:

1. COATING THE VERTICAL FACE OF PAVEMENT WITH HOT RUBBERIZED SEALANT SHALL BE INCIDENTAL TO THE PAVEMENT ITEMS.

Date:2/13/2015

Filename: 012_MOTDetails02.dgn

No.	Revision	By	Date

Scale:

Designed by: HNTB

CONSULTANT PROJECT MANAGER: R. Bruce Munger, P.E.

	By	Date		By	Date
Designed	LZD	02/15	Checked	TMH	02/15
Drawn	MPC	02/15	In Charge of	RAL	02/15

HNTB CORPORATION
340 County Road, Suite 6-C
Westbrook, ME 04092
TEL (207) 774-5155
FAX (207) 228-0909

MAINE TURNPIKE

THE GOLD STAR MEMORIAL HIGHWAY

MTA PROJECT MANAGER: William Yates

WEST GARDINER BARRIER TOLL PLAZA ORT CONVERSION

MAINTENANCE OF TRAFFIC DETAILS II

SHEET NUMBER: TC-06

CONTRACT:2015.11

MAINLINE CONSTRUCTION SIGN SUMMARY

IDENTIFICATION NUMBER	SIZE OF SIGN WIDTH	SIZE OF SIGN HEIGHT	TEXT	TEXT DIMENSIONS (INCHES) LETTER HEIGHT	TEXT DIMENSIONS (INCHES) VERTICAL SPACING	TEXT DIMENSIONS (INCHES) ARROW RTE. MKR.	NUMBER OF SIGNS REQUIRED	COLOR BACKGROUND	COLOR LEGEND BORDER	AREA IN SQUARE FEET
W20-1 (1 MILE) (AHEAD)	48"	48"	ROAD WORK 1 MILE	TEXT DIMENSIONS SHALL CONFORM TO THE STANDARD HIGHWAY SIGNS 2004 EDITION AND 2012 SUPPLEMENT			4	ORANGE	BLACK	16.00 (64.0)
W20-5R (1/2 MILE)	48"	48"	RIGHT LANE CLOSED 1/2 MILE				2			16.00 (32.0)
W20-5L (1/2 MILE)	48"	48"	LEFT LANE CLOSED 1/2 MILE				4			16.00 (64.0)
W4-2L	48"	48"					4			16.00 (64.0)
W4-2R	48"	48"					4			16.00 (64.0)
W21-5	48"	48"	SHOULDER WORK				2			16.00 (32.0)
W21-5aR	48"	48"	RIGHT SHOULDER CLOSED				2			16.00 (32.0)
W21-5bR	48"	48"	RIGHT SHOULDER CLOSED 1000 FT				2			16.00 (32.0)
W3-4	48"	48"	BE PREPARED TO STOP				4			16.00 (64.0)
W3-5 (25) (50)	48"	48"	SPEED LIMIT XX				2 4			16.00 (32.0) (64.0)
CS-3	48"	48"	EXPECT STOPPED TRAFFIC	6" 6"	4"		4			16.00 (64.0)
W7-3aP	30"	24"	NEXT X FEET	6" 6"	4.5"		4			5.00 (20.0)

MAINLINE CONSTRUCTION SIGN SUMMARY

IDENTIFICATION NUMBER	SIZE OF SIGN WIDTH	SIZE OF SIGN HEIGHT	TEXT	TEXT DIMENSIONS (INCHES) LETTER HEIGHT	TEXT DIMENSIONS (INCHES) VERTICAL SPACING	TEXT DIMENSIONS (INCHES) ARROW RTE. MKR.	NUMBER OF SIGNS REQUIRED	COLOR BACKGROUND	COLOR LEGEND BORDER	AREA IN SQUARE FEET
R2-1 (50) (25)	48"	60"	SPEED LIMIT XX	TEXT DIMENSIONS SHALL CONFORM TO THE STANDARD HIGHWAY SIGNS 2004 EDITION AND 2012 SUPPLEMENT			4 2	WHITE	BLACK	20.00 (80.0) (40.0)
R2-12	48"	60"	END WORK ZONE SPEED				2			20.00 (40.0)
R2-6aP	48"	24"	FINES DOUBLED	6" 6"	4.5"		6			8.00 (48.0)
G20-5aP	48"	24"	WORK ZONE	6" 6"	4.5"		6	ORANGE	BLACK	8.00 (48.0)
G20-2	48"	24"	END ROAD WORK	TEXT DIMENSIONS SHALL CONFORM TO THE STANDARD HIGHWAY SIGNS 2004 EDITION AND 2012 SUPPLEMENT			2			8.00 (16.0)
OM3-R	12"	36"		N/A			2	YELLOW	BLACK	3.00 (6.0)
OM3-L	12"	36"		N/A			2	YELLOW	BLACK	3.00 (6.0)
CS-10	48"	48"	TRUCKS ENTERING	TEXT DIMENSIONS SHALL CONFORM TO THE STANDARD HIGHWAY SIGNS 2004 EDITION AND 2012 SUPPLEMENT			2	ORANGE	BLACK	16.00 (32.0)
R11-2	30"	48"	ROAD CLOSED	TEXT DIMENSIONS SHALL CONFORM TO THE STANDARD HIGHWAY SIGNS 2004 EDITION AND 2012 SUPPLEMENT			2	WHITE	BLACK	10.00 (20.0)
CS-52	48"	48"	TOLL PLAZA WORK AHEAD	TEXT DIMENSIONS SHALL CONFORM TO "STANDARD HIGHWAY SIGNS" - 2000			4	ORANGE	BLACK	16.00 (64.0)
CS-53	48"	48"	LANE CLOSED	6" 6"	4"		2	ORANGE	BLACK	16.00 (32.0)

Date:2/13/2015

Filename: 013_TCP Sign Summary.dgn

No.	Revision	By	Date

Scale:

Designed by:

HNTB

CONSULTANT PROJECT MANAGER: R. Bruce Munger, P.E.

	By	Date		By	Date
Designed	LZD	02/15	Checked	TMH	02/15
Drawn	MPC	02/15	In Charge of	RAL	02/15

HNTB CORPORATION
340 County Road, Suite 6-C
Westbrook, ME 04092
TEL (207) 774-5155
FAX (207) 228-0909

MAINE TURNPIKE

THE GOLD STAR MEMORIAL HIGHWAY

MTA PROJECT MANAGER: William Yates

WEST GARDINER BARRIER TOLL PLAZA ORT CONVERSION

MAINTENANCE OF TRAFFIC SIGN SUMMARY 1

SHEET NUMBER: TC-07

CONTRACT:2015.11

LUNTS HILL ROAD CONSTRUCTION SIGN SUMMARY

IDENTIFICATION NUMBER	SIZE OF SIGN WIDTH	SIZE OF SIGN HEIGHT	TEXT	TEXT DIMENSIONS (INCHES) LETTER HEIGHT	TEXT DIMENSIONS (INCHES) VERTICAL SPACING	TEXT DIMENSIONS (INCHES) ARROW RTE. MKR.	NUMBER OF SIGNS REQUIRED	COLOR BACK-GROUND	COLOR LEGEND BORDER	AREA IN SQUARE FEET
W20-1	48"	48"	ROAD WORK AHEAD	TEXT DIMENSIONS SHALL CONFORM TO "STANDARD HIGHWAY SIGNS" - 2000			2	ORANGE	BLACK	16.00 (32.0)
W20-4	48"	48"	ONE LANE ROAD AHEAD				2			16.00 (32.0)
W20-7	48"	48"					2			16.00 (32.0)
G20-2	48"	24"	END ROAD WORK				2			8.00 (16.0)

WIDE LOAD CONSTRUCTION SIGN SUMMARY

IDENTIFICATION NUMBER	SIZE OF SIGN WIDTH	SIZE OF SIGN HEIGHT	TEXT	TEXT DIMENSIONS (INCHES) LETTER HEIGHT	TEXT DIMENSIONS (INCHES) VERTICAL SPACING	TEXT DIMENSIONS (INCHES) ARROW RTE. MKR.	NUMBER OF SIGNS REQUIRED	COLOR BACK-GROUND	COLOR LEGEND BORDER	AREA IN SQUARE FEET
CS-41	96"	18"	NORTHBOUND SOUTHBOUND AT EXIT 86 AT EXIT 103	8"C 8"C	6" 6" 6"		6	ORANGE	BLACK	12.00 (72)
CS-43	96"	48"	WIDE LOADS OVER 10 FEET MUST EXIT	8"C 8"C 8"C 8"C	6" 6" 6" 6" 6"		2	ORANGE	BLACK	32.00 (64)
CS-44	96"	48"	WIDE LOADS OVER 10 FEET PROHIBITED	8"C 8"C 8"C	6" 6" 6" 6"		4	ORANGE	BLACK	48.00 (192)
CS-48	48"	36"	WIDE LOADS →	8"C	6" 6" 6"	15"x25" @90°	2	ORANGE	BLACK	12.00 (24.0)
MI-2	24"	24"	INTERSTATE 95	TEXT DIMENSIONS SHALL CONFORM TO STANDARD HIGHWAY SIGNS - 2000			6	TEXT DIMENSIONS SHALL CONFORM TO STANDARD HIGHWAY SIGNS - 2000		4.00 (24.0)
LOGO S	24"	24"	MAINE TURNPIKE	SEE DETAILS			6	SEE DETAILS		4.00 (24.0)

Date:2/13/2015

Filename: 014_TCP Sign Summary.dgn

No.	Revision	By	Date

Scale:

Designed by: HNTB

CONSULTANT PROJECT MANAGER: R. Bruce Munger, P.E.

	By	Date		By	Date
Designed	LZD	02/15	Checked	TMH	02/15
Drawn	MPC	02/15	In Charge of	RAL	02/15

HNTB CORPORATION
340 County Road, Suite 6-C
Westbrook, ME 04092
TEL (207) 774-5155
FAX (207) 228-0909

MAINE TURNPIKE

THE GOLD STAR MEMORIAL HIGHWAY

MTA PROJECT MANAGER: William Yates

WEST GARDINER BARRIER TOLL PLAZA
ORT CONVERSION

MAINTENANCE OF TRAFFIC
SIGN SUMMARY 2

SHEET NUMBER: TC-08

CONTRACT:2015.11

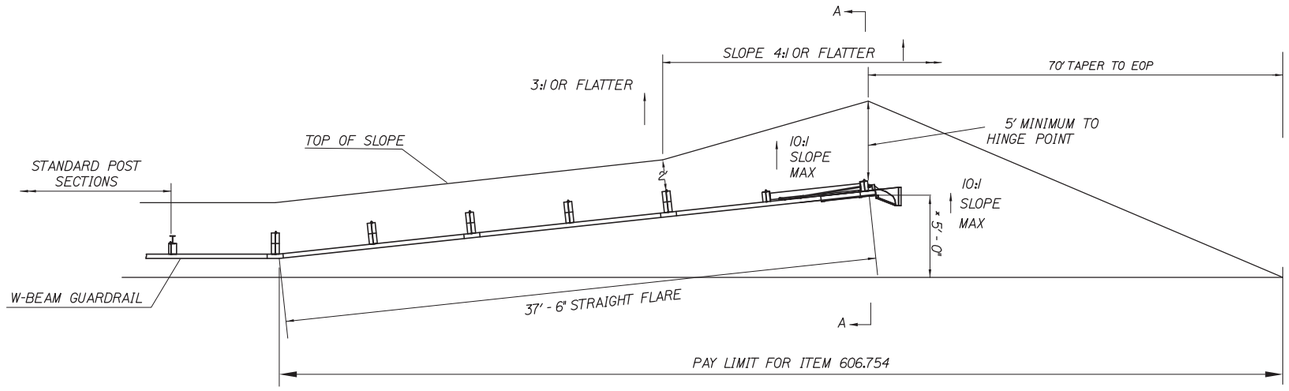

WIDEN SHOULDER FOR GUARDRAIL 350 FLARED TERMINAL
PLAN VIEW

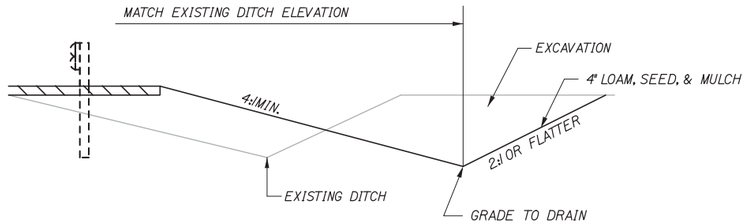

SECTION A-A
DITCH DETAIL

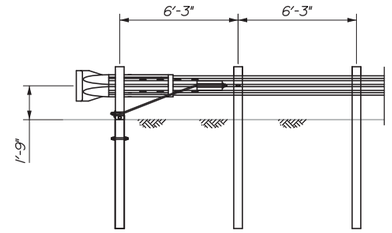

TERMINAL END - ANCHORED END
(ITEM 606.278)

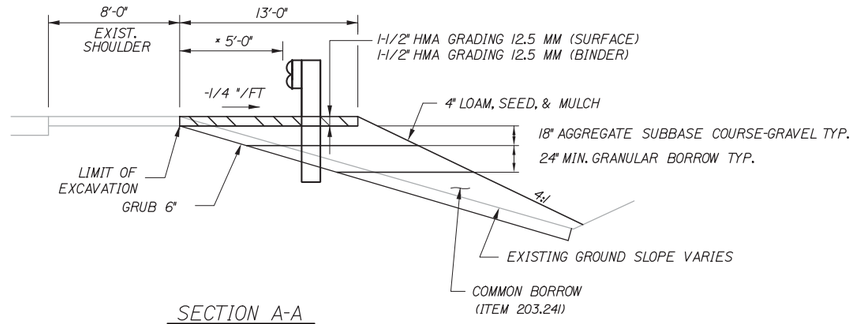

SECTION A-A
FILL DETAIL

x 5'-0" IS APPROXIMATE - ACTUAL DISTANCE SHALL BE 4'-0" FROM THE FACE OF PARALLEL RAIL FROM EOP.

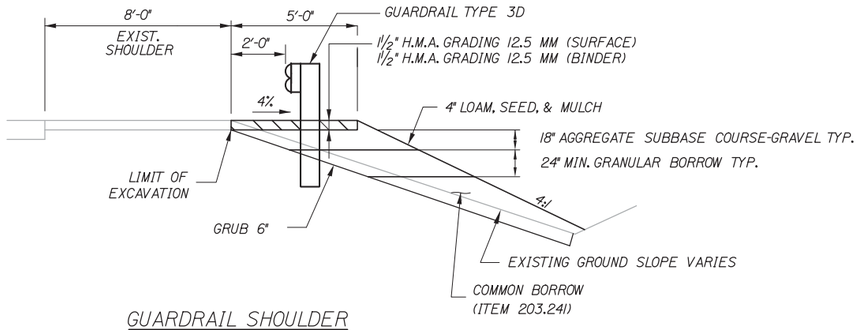

GUARDRAIL SHOULDER
DETAIL

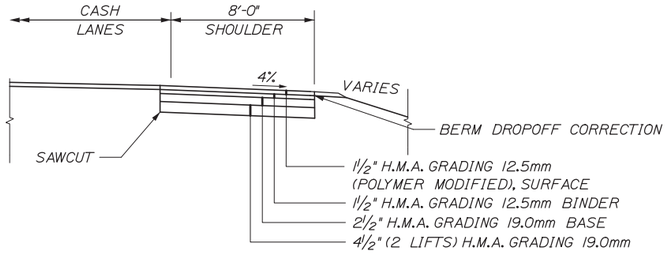

CASH LANE
SHOULDER CONSTRUCTION

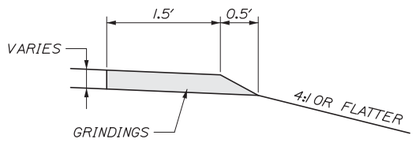

BERM DROPOFF CORRECTION
(WITHOUT GUARDRAIL)

NOTE:
1. ALL WORK IN THIS DETAIL, WITH THE EXCEPTION OF COMMON BORROW AND PAVEMENT, SHALL BE PAID FOR UNDER ITEM 205.51 WIDENING OF EXISTING SHOULDER - PLAN QUANTITY

Scale:

No.	Revision	By	Date

Designed by: HNTB

CONSULTANT PROJECT MANAGER: R. Bruce Munger, P.E.

	By	Date		By	Date
Designed	TMH	02/15	Checked	LZD	02/15
Drawn	PMK	02/15	In Charge of	RAL	02/15

HNTB CORPORATION
340 County Road, Suite 6-C
Westbrook, ME 04092
TEL (207) 774-5155
FAX (207) 228-0909

MAINE TURNPIKE

THE GOLD STAR MEMORIAL HIGHWAY

MTA PROJECT MANAGER: William Yates

WEST GARDINER BARRIER TOLL PLAZA ORT CONVERSION

SHOULDER WIDENING AND GUARDRAIL END TREATMENT DETAILS

SHEET NUMBER: BAR-01

CONTRACT:2015.11

Date:2/13/2015

Filename: 015_GREndTreatmentDetails.dgn

Date:2/13/2015

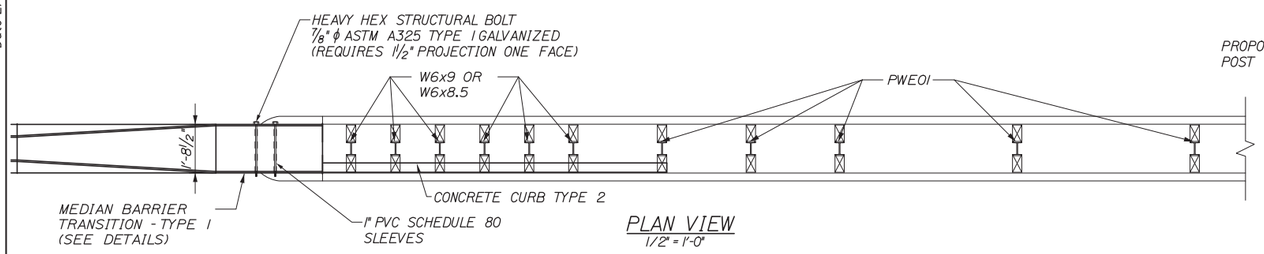

PLAN VIEW
1/2" = 1'-0"

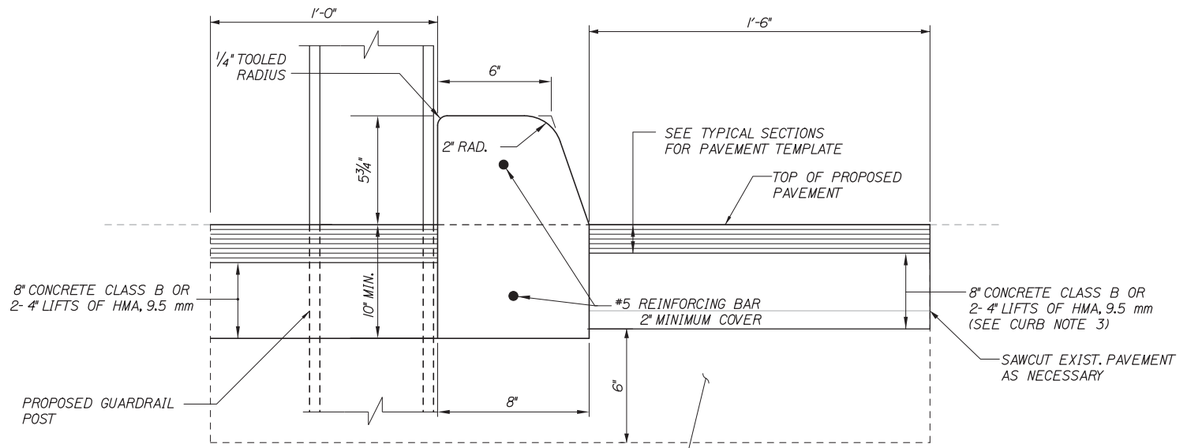

CONCRETE CURB
TYPE 2
3"=1'-0"

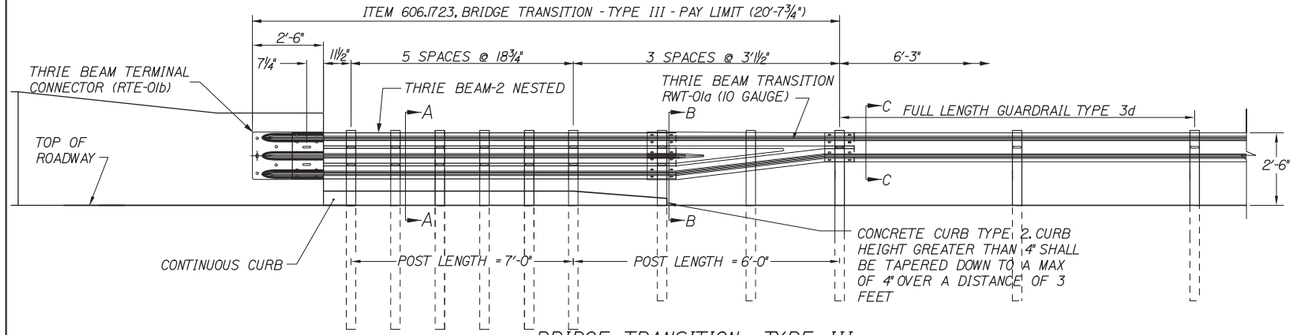

BRIDGE TRANSITION - TYPE III
3/8" = 1'-0"

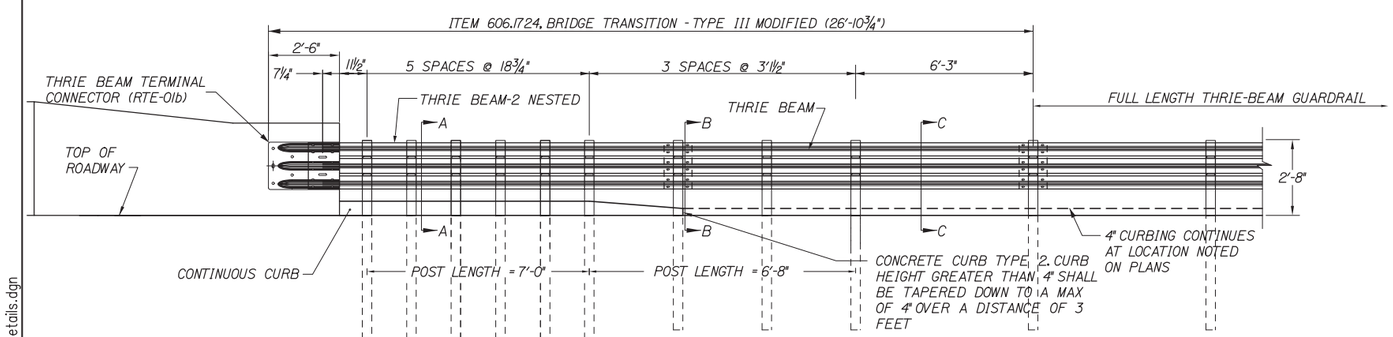

BRIDGE TRANSITION - TYPE III MODIFIED
3/8" = 1'-0"

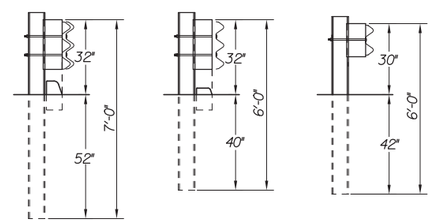

SECTION A-A SECTION B-B SECTION C-C

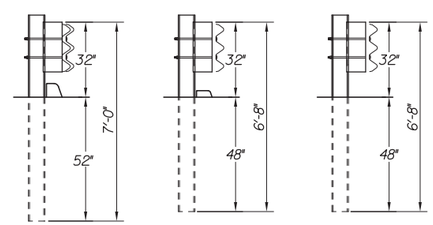

SECTION A-A SECTION B-B SECTION C-C

CURB NOTES:

1. CURBING SHALL BE EITHER PRECAST CONCRETE, CAST-IN-PLACE CONCRETE OR GRANITE TO MEET DIMENSIONS SHOWN ON THE PLANS . CURBING SHALL BE PAID UNDER ITEM 609.191 CONCRETE CURB TYPE 2.
2. CONCRETE CURBS USED IN CONJUNCTION WITH THRIE-BEAM BRIDGE ATTACHMENT SHALL BE TYPE 2, SEE DETAILS THIS SHEET. CONCRETE CURBS SHALL BE CONTINOUS WITHOUT DRAINAGE CUTS.
3. CURB TRANSITION SHALL BE INCLUDED FOR PAYMENT UNDER ITEM 609.191 CONCRETE CURB TYPE 2.
4. SAWCUTTING EXISTING PAVEMENT, CONCRETE FILL, AND PAVEMENT TO LIMITS SHOWN SHALL BE INCIDENTAL TO ITEM 609.191

GENERAL NOTES:

1. ADDITIONAL HOLES MAY BE MADE IN THE THRIE-BEAM PANELS BY DRILLING, PUNCHING, OR OTHER MEANS THAT PRODUCE A NEAT, CLEAN HOLE. BURNING HOLES WILL NOT BE ALLOWED.
2. THRIE BEAM SHALL BE PLACED WITH THE COMOPSITE BLOCKOUT FACE IN FRONT OF OR DIRECTLY ABOVE THE CURB FACE.
3. RAIL ELEMENT SHALL MEET ALL REQUIREMENTS OF AASHTO M-180 EXCEPT AS MODIFIED ON THE PLANS. THE THRIE BEAM TRANSITION TO W-BEAM SHALL BE OF THE SAME MATERIAL, BUT SHALL NOT BE LESS THAN 10 GAUGE.
4. AFTER INSTALLATION IS COMPLETE, UPSET THE THREAD ON THE ANCHOR BOLTS IN THREE PLACES AROUND EACH BOLT, AT THE JUNCTION OF THE NUT AND THE EXPOSED THREAD, WITH A CENTER PUNCH OR SIMILAR TOOL.
5. STANDARD BARRIER HARDWARE HAS BEEN USED TO DEVELOP THESE GUARDRAIL ATTACHMENTS. DESIGNATIONS PROVIDED IN PARENTHESIS RELATE TO STANDARD ELEMENTS DETAILED IN "A GUIDE TO STANDARDIZED BARRIER RAIL HARDWARE." 1979. AASHTO-AGC-ARTBA JOINT COOPERATE COMMITTEE.
6. 1" HOLE IN CONCRETE SHALL BE FORMED BY A 1" I.D. PVC SLEEVE AS APPROVED BY THE ENGINEER.
7. FOR ITEM 606.1736, SECTION C-C GUARDRAIL TYPE 3d EXISTING OR PROPOSED SHALL TAPER FROM 30" TO TOP OF POST AT TRANSITION TO 27" OVER 50' MIN.

Filename: 016_GR-BarrierTransitionDetails.dgn

Scale: NOT TO SCALE

No.	Revision	By	Date

Designed by: HNTB

CONSULTANT PROJECT MANAGER: R. Bruce Munger, P.E.

	By	Date		By	Date
Designed	LZD	02/15	Checked	RJD	02/15
Drawn	MPC	02/15	In Charge of	RAL	02/15

HNTB CORPORATION
340 County Road, Suite 6-C
Westbrook, ME 04092
TEL (207) 774-5155
FAX (207) 228-0909

MAINE TURNPIKE

THE GOLD STAR MEMORIAL HIGHWAY

MTA PROJECT MANAGER: WILLIAM YATES

WEST GARDINER BARRIER TOLL PLAZA ORT CONVERSION

GUARDRAIL DETAILS MEDIAN BARRIER TRANSITION

SHEET NUMBER: BAR-02

CONTRACT:2015.11

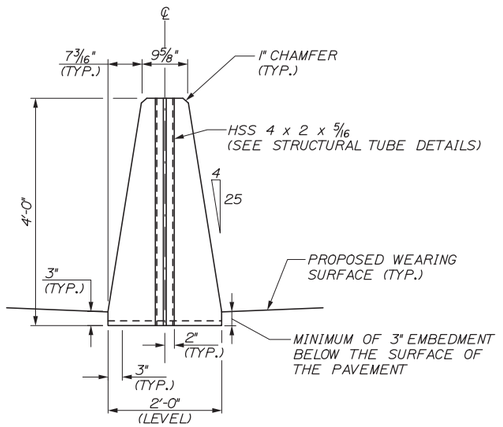

END VIEW (MASONRY)

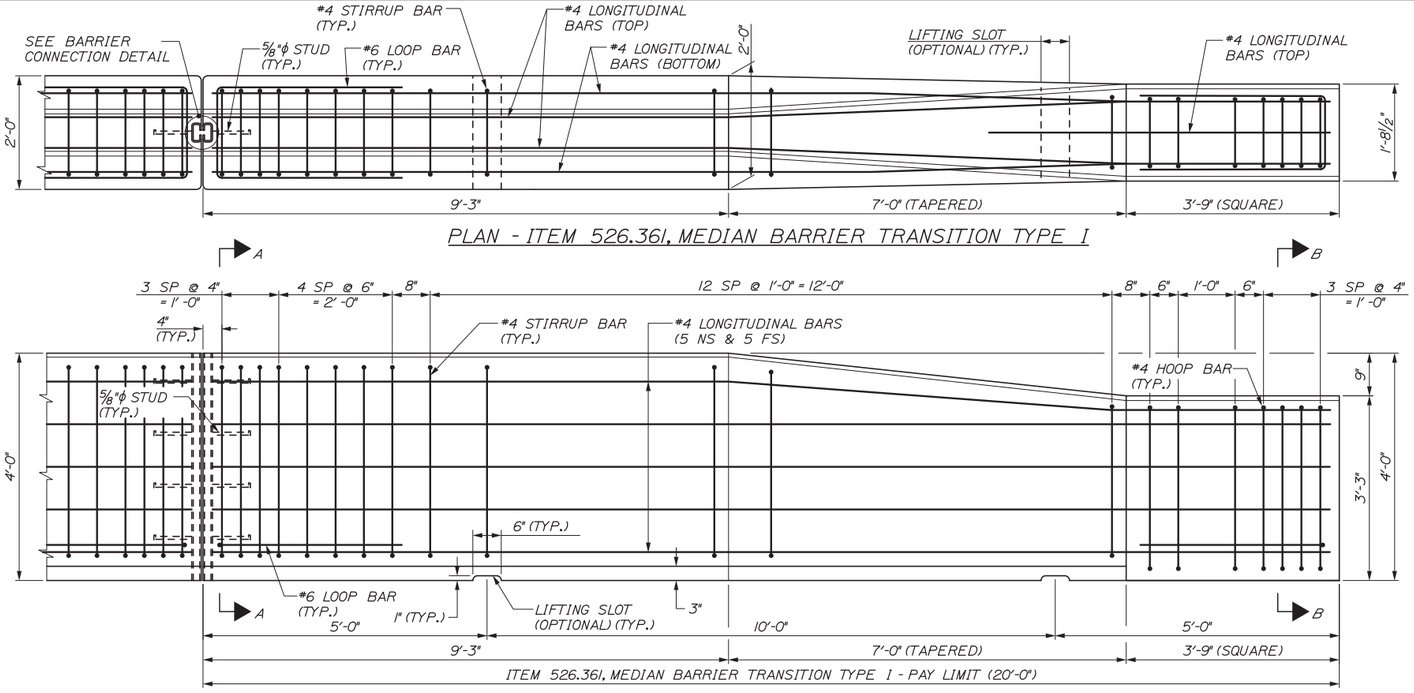

PLAN - ITEM 526.361, MEDIAN BARRIER TRANSITION TYPE 1

ELEVATION

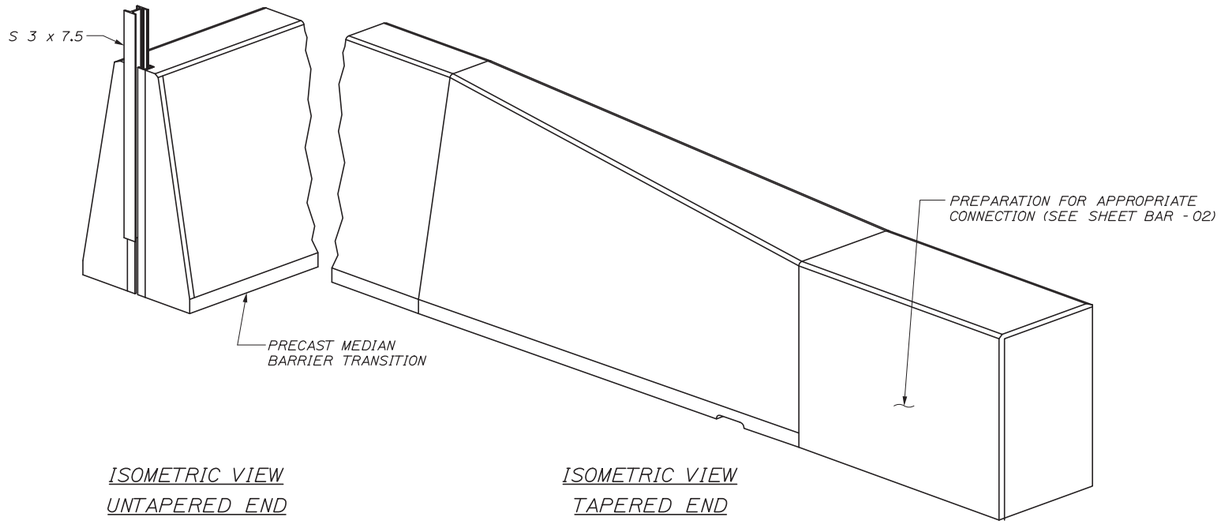

ISOMETRIC VIEW
UNTAPERED END

ISOMETRIC VIEW
TAPERED END

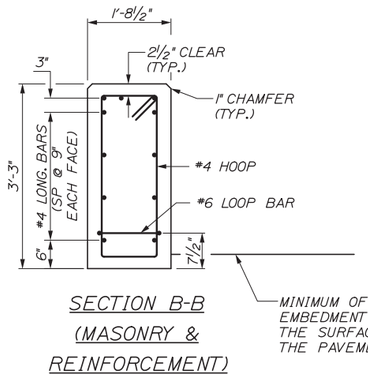

SECTION B-B
(MASONRY &
REINFORCEMENT)

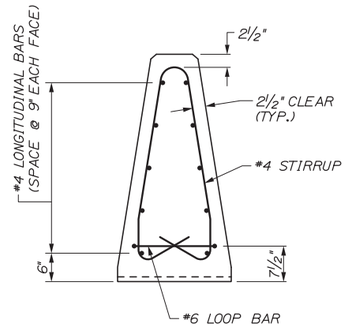

SECTION A-A (REINFORCEMENT)

NOTES:
1. SEE CONCRETE BARRIER DETAILS - 2 FOR NOTES AND BARRIER CONNECTION DETAILS.
2. PREPARATION OF SUBGRADE SHALL BE PERFORMED TO ENSURE PROPER HEIGHT OF CONNECTING GUARDRAIL PRIOR TO PLACING MEDIAN BARRIER TRANSITION.

Date:2/13/2015

Filename: 017_BarrierDet01.dgn

Scale: NOT TO SCALE

No.	Revision	By	Date

Designed by: HNTB

CONSULTANT PROJECT MANAGER: R. Bruce Munger, P.E.

	By	Date		By	Date
Designed	RWH	02/15	Checked	RJD	02/15
Drawn	MPC	02/15	In Charge of	RAL	02/15

HNTB CORPORATION
340 County Road, Suite 6-C
Westbrook, ME 04092
TEL (207) 774-5155
FAX (207) 228-0909

MAINE TURNPIKE

THE GOLD STAR MEMORIAL HIGHWAY

MTA PROJECT MANAGER: William Yates

WEST GARDINER BARRIER TOLL PLAZA
ORT CONVERSION

CONCRETE BARRIER DETAILS - 1
MEDIAN BARRIER TRANSITION TYPE 1

SHEET NUMBER: BAR-03

CONTRACT:2015.11

Date:2/13/2015

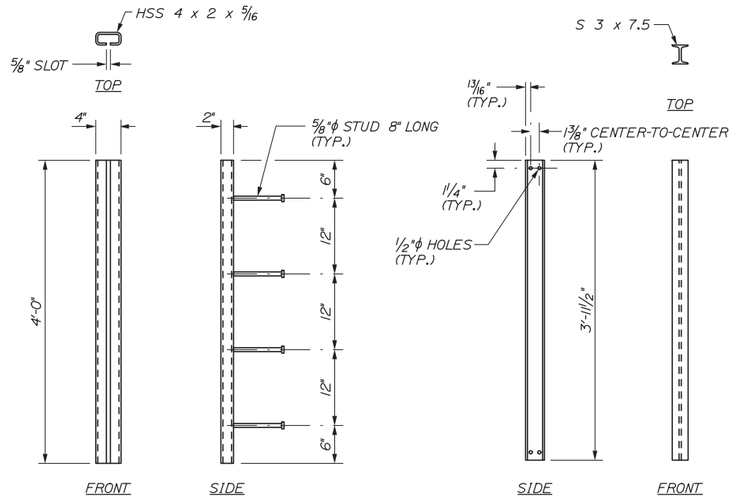

STRUCTURAL TUBE DETAILS

I-BEAM DETAILS

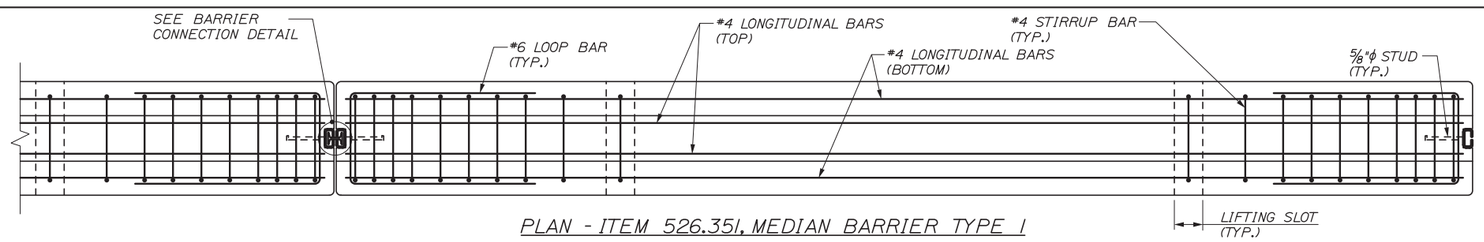

PLAN - ITEM 526.351, MEDIAN BARRIER TYPE 1

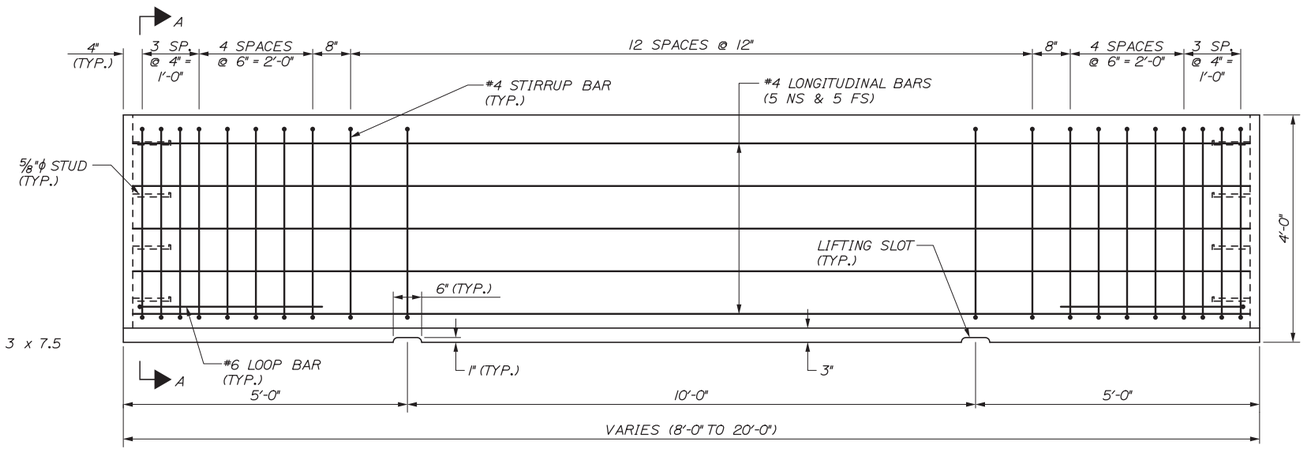

ELEVATION

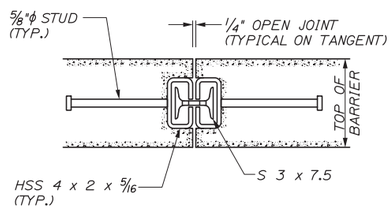

BARRIER CONNECTION DETAIL

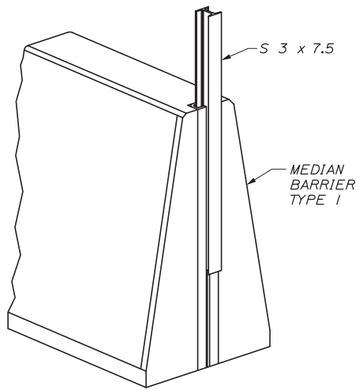

ISOMETRIC VIEW

BARRIER NOTES:

1. THE CONCRETE BARRIER DETAILS, AS SHOWN ON THIS SHEET, ARE IN COMPLIANCE WITH THE REQUIREMENTS OF NCHRP REPORT 350, TL 4.
2. I-BEAMS AND STRUCTURAL TUBES SHALL BE GALVANIZED AFTER FABRICATION.
3. EACH BARRIER UNIT SHALL INCLUDE ONE S 3 x 7.5 AS SHOWN ON THIS PLAN SHEET.
4. SHOP DRAWINGS SHALL INCLUDE REINFORCING SCHEDULE.
5. MEDIAN BARRIER SHALL BE PAID FOR UNDER APPROPRIATE 526 ITEMS.
6. THE BARRIERS SHALL BE LIGHT COLORED CLASS "P" CONCRETE HAVING A MINIMUM 28 DAY COMPRESSION STRENGTH OF 4,500 PSI. BARRIERS SHALL HAVE A SMOOTH UNIFORM SURFACE FREE OF DEFECTS AND IRREGULARITIES. CASTING DATE SHALL BE SHOWN ON BARRIER. ALL EXPOSED EDGES OF CONCRETE SHALL BE CHAMFERED 3/4", UNLESS NOTED OTHERWISE.
7. ALL REINFORCING STEEL SHALL BE AASHTO M31 (ASTM-A615) GRADE 60, EPOXY COATED. REINFORCEMENT SHOWN IS THE MINIMUM REQUIRED.
8. CLEAR PROTECTIVE COATING FOR CONCRETE SURFACES SHALL BE APPLIED ON-SITE AND APPROVED BY THE RESIDENT. COATING SHALL BE INCIDENTAL TO BARRIER.

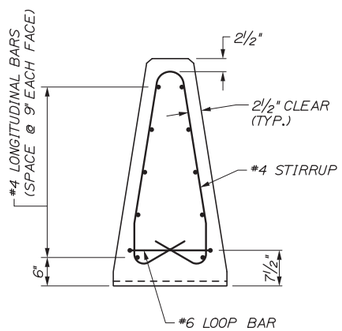

SECTION A-A (REINFORCEMENT)

MEDIAN BARRIER TYPE 1 REINFORCING SCHEDULE

DESCRIPTION	SIZE	NO.	UNBENT LENGTH	TYPE
LONGITUDINAL (EACH FACE)	#4	10	19'-8"	
STIRRUPS	#4	29	8'-11"	
LOOP BAR	#6	2	7'-11"	

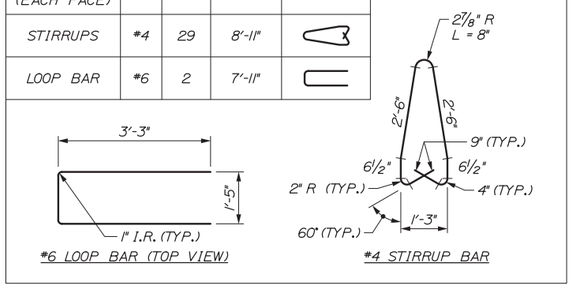

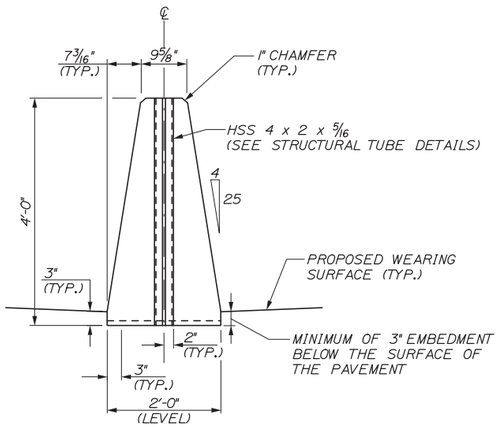

END VIEW (MASONRY)

Filename: 018_BarrierDet02.dgn

Scale: NOT TO SCALE

No.	Revision	By	Date

Designed by: HNTB

CONSULTANT PROJECT MANAGER: R. Bruce Munger, P.E.

	By	Date		By	Date
Designed	RWH	02/15	Checked	RJD	02/15
Drawn	MPC	02/15	In Charge of	RAL	02/15

HNTB CORPORATION
340 County Road, Suite 6-C
Westbrook, ME 04092
TEL (207) 774-5155
FAX (207) 228-0909

MAINE TURNPIKE

THE GOLD STAR MEMORIAL HIGHWAY

MTA PROJECT MANAGER: William Yates

WEST GARDINER BARRIER TOLL PLAZA ORT CONVERSION

CONCRETE BARRIER DETAILS - 2 MEDIAN BARRIER TYPE 1

SHEET NUMBER: BAR-04

CONTRACT:2015.11

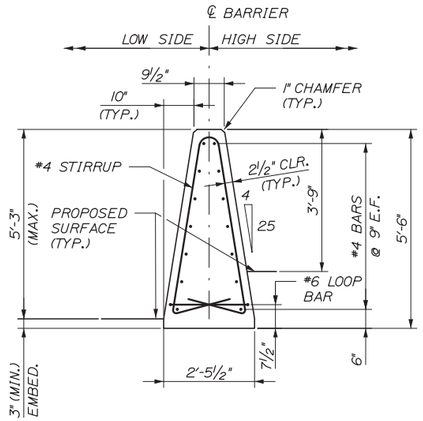

ITEM 526.3511
MEDIAN BARRIER TYPE IA

SCALE: ½" = 1'-0"

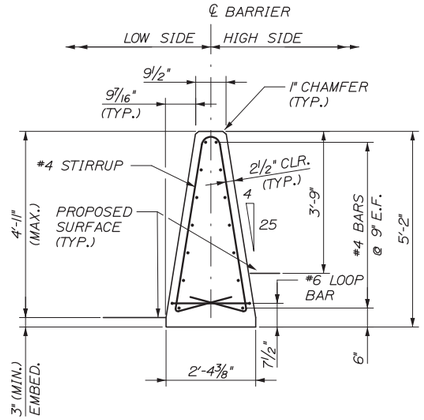

ITEM 526.3512
MEDIAN BARRIER TYPE IB

SCALE: ½" = 1'-0"

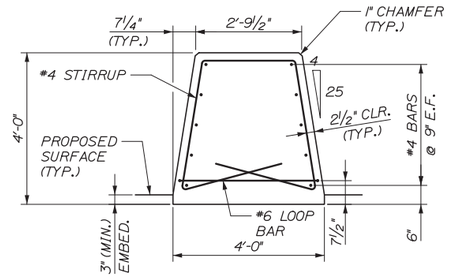

ITEM 526.352
MEDIAN BARRIER TYPE II

SCALE: ½" = 1'-0"

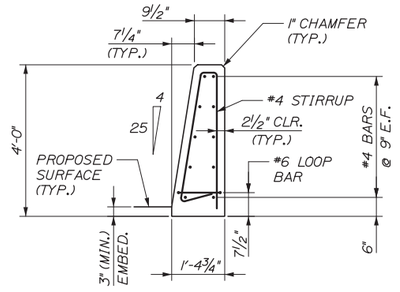

ITEM 526.353
MEDIAN BARRIER TYPE III

SCALE: ½" = 1'-0"

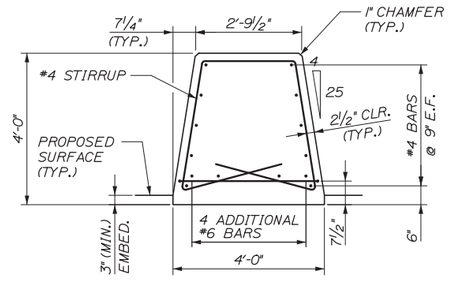

ORT SLAB LIMITS ONLY
NB: STA 216+45 - 217+08, SB STA 114+92 - 115+55
MEDIAN BARRIER TYPE II

SCALE: ½" = 1'-0"

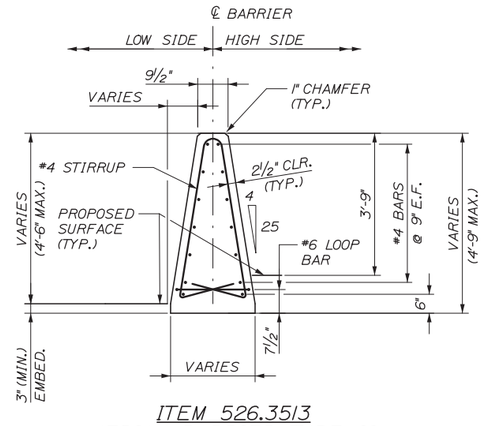

ITEM 526.3513
MEDIAN BARRIER TYPE IC

SCALE: ½" = 1'-0"

NOTES:

1. SEE CONCRETE BARRIER DETAILS - 2 FOR NOTES AND BARRIER CONNECTION DETAILS.
2. LENGTH OF INDIVIDUAL BARRIER SECTIONS SHALL BE BETWEEN 8'-0" AND 20'-0".
3. SPACING OF #4 STIRRUPS SHALL BE SIMILAR TO SPACING OF MEDIAN BARRIER TYPE 1.
4. #6 LOOP BAR SHALL BE SIMILAR TO #6 LOOP BAR OF MEDIAN BARRIER TYPE 1.
5. ALL MEDIAN BARRIER BETWEEN CASH AND ORT LANES SHALL HAVE A 1" X 6" LIFTING SLOT THE ENTIRE WIDTH OF BARRIER FROM 5' FROM THE END. SEE MEDIAN BARRIER TYPE 1 FOR INFORMATION.
6. MEDIAN BARRIER TYPE IC SHALL BE CAST-IN-PLACE FOUNDED ON EXISTING APPROACH SLAB. PROVIDE BOND BREAKER BETWEEN EXISTING APPROACH SLAB AND PROPOSED MEDIAN BARRIER.
7. MEDIAN BARRIER TYPE II SHALL BE CAST-IN-PLACE.

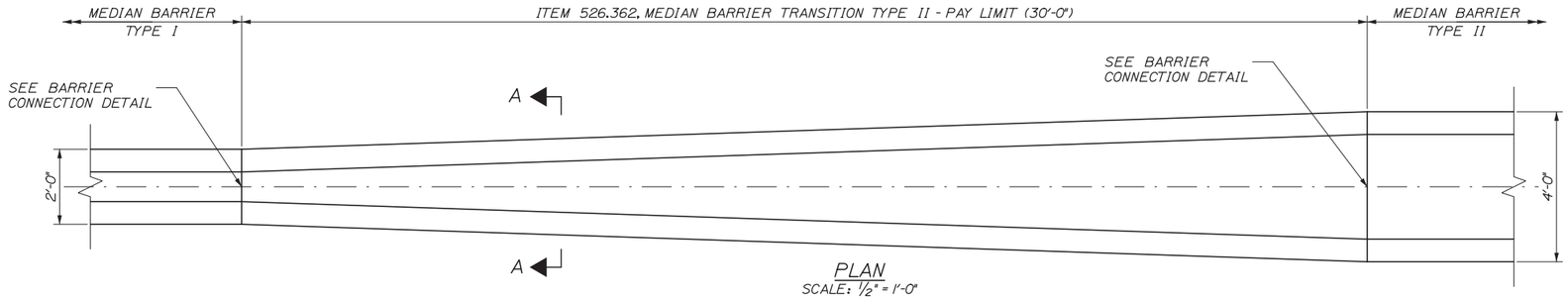

PLAN
SCALE: ½" = 1'-0"

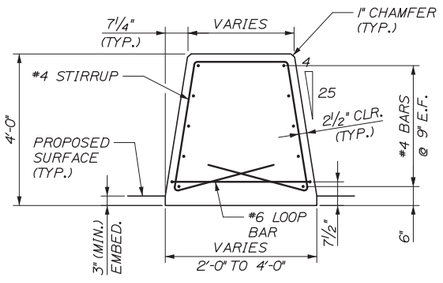

SECTION A-A
SCALE: ½" = 1'-0"

Date:2/13/2015

Filename: 019_BarrierDet03.dgn

Scale:			
No.	Revision	By	Date

Designed by: HNTB

CONSULTANT PROJECT MANAGER: R. Bruce Munger, P.E.

	By	Date		By	Date
Designed	RWH	02/15	Checked	RJD	02/15
Drawn	MPC	02/15	In Charge of	RAL	02/15

HNTB CORPORATION
340 County Road, Suite 6-C
Westbrook, ME 04092
TEL (207) 774-5155
FAX (207) 228-0909

MAINE TURNPIKE

THE GOLD STAR MEMORIAL HIGHWAY

MTA PROJECT MANAGER: William Yates

WEST GARDINER BARRIER TOLL PLAZA ORT CONVERSION

CONCRETE BARRIER DETAILS - 3

SHEET NUMBER: BAR-05

CONTRACT:2015.11

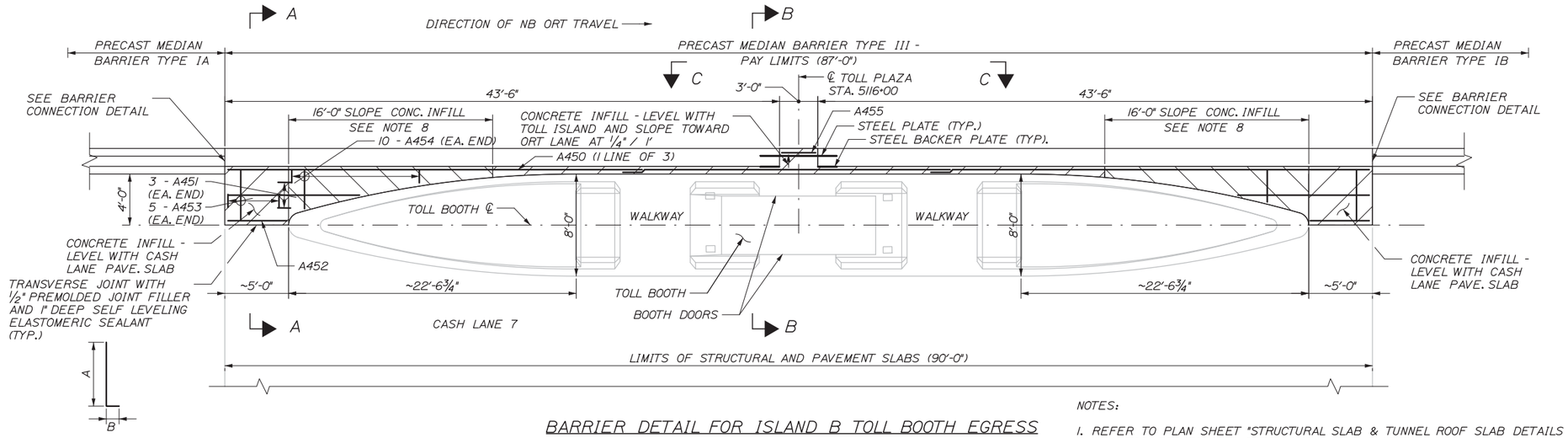

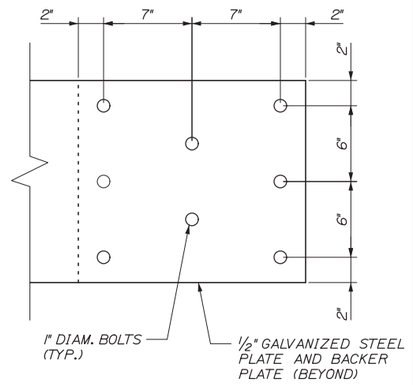

CONNECTION DETAIL

SCALE: 2" = 1'-0"

TYPE 118

REINFORCING BAR SCHEDULE								
MARK	SIZE	NO.	LENGTH	TYPE	A	B C	INCR.	LOCATION AND REMARKS
A450	4	8	31'-0"	STR				
A451	4	12	6' 3" TO 14' 3"	STR			4' 0"	
A452	4	4	4'-7"	STR				
A453	4	20	4' 0"	STR				
A454	4	40	3'-3" TO 11'-0"	STR			0'-3"	
A455	4	350	1' 2"	118	0' 8"	0' 6"		

BARRIER DETAIL FOR ISLAND B TOLL BOOTH EGRESS PLAN VIEW (ISLAND F SB SIMILAR)

SCALE: 1" = 5'-0"

NOTES:

1. REFER TO PLAN SHEET "STRUCTURAL SLAB & TUNNEL ROOF SLAB DETAILS - I" FOR MORE STRUCTURAL NOTES.
2. ONLY TOP REINFORCING STEEL SHOWN FOR CLARITY
3. REINFORCING STEEL SHALL HAVE A 2 1/2" MINIMUM COVER UNLESS OTHERWISE NOTED.
4. PREFORMED JOINT MATERIAL SHALL CONFORM TO THE CROSS SECTION OF THE PAVEMENT AND BE FURNISHED IN STRIPS EQUAL TO THE PAVEMENT WIDTH.
5. NO HOLE SHALL BE DRILLED CLOSER THAN 3" FROM THE EXISTING EDGE OF CONCRETE.
6. PREMOLDED JOINT FILLER SHALL CONFORM TO ASTM DESIGNATION D1752, TYPE I OR ASTM D5249, TYPE 2. PREMOLDED JOINT FILLER SHALL BE A NON STAINING, NON BLEEDING TYPE. PRODUCTS SUCH AS 'CERAMAR', MANUFACTURED BY W. R. MEADOWS, OR AN APPROVED EQUAL WILL BE ACCEPTABLE. CORK IS NOT AN ACCEPTABLE JOINT FILLER MATERIAL.
7. SELF LEVELING ELASTOMERIC SEALANT SHALL BE SIKA FLEX 1A OR AN APPROVED EQUAL.
8. PREMOLDED JOINT FILLER AND SELF LEVELING ELASTOMERIC SEALANT SHALL BE INCIDENTAL TO ITEM 502.262, STRUCTURAL CONCRETE PLAZA ISLAND, PAVEMENT SLAB AND PAVEMENT SLAB INFILL CONCRETE.
9. SLOPE CONCRETE INFILL FROM TOP OF PAVEMENT SLAB UP TO TOP OF TOLL ISLAND.

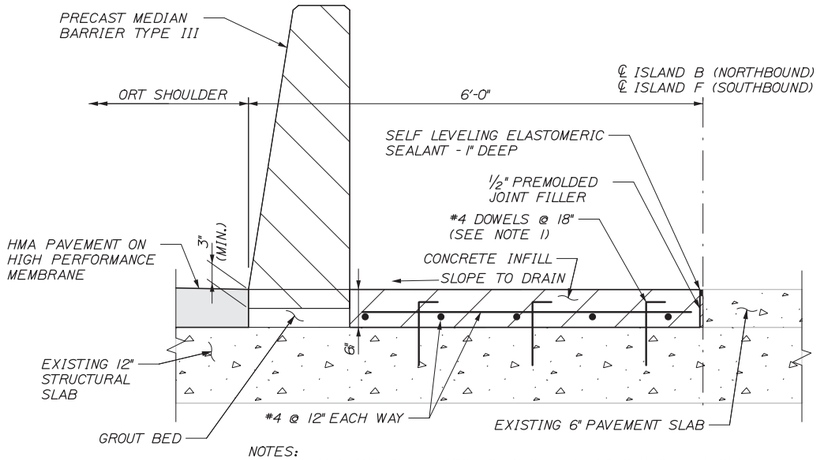

NOTES:
1. DRILL AND ANCHOR #4 DOWELS INTO EXISTING STRUCTURAL SLAB. EMBEDMENT DEPTH SHALL BE 6" MINIMUM.
2. DEPTH OF INFILL CONCRETE VARIES. SEE PLAN.

SECTION A-A

SCALE: 1" = 1'-0"

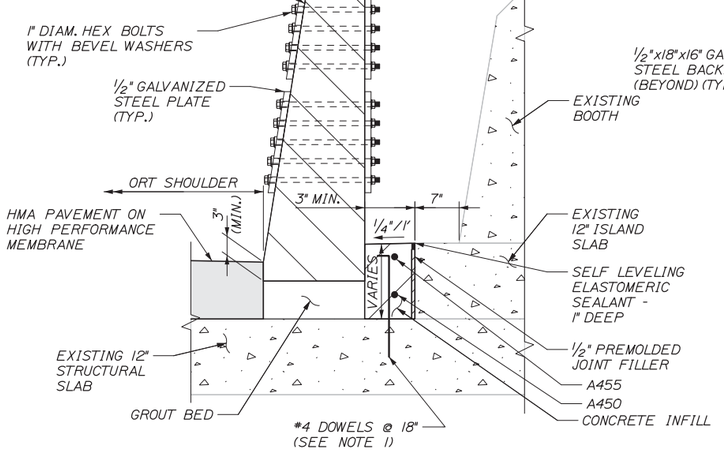

NOTES:
1. DRILL AND ANCHOR #4 DOWELS INTO EXISTING STRUCTURAL SLAB. EMBEDMENT DEPTH SHALL BE 6" MINIMUM.
2. DEPTH OF INFILL CONCRETE VARIES. SEE PLAN.
3. HEX BOLTS SHALL CONFORM TO ASTM A307 OR A325. ALL HARDWARE SHALL BE HOT DIP GALVANIZED.

SECTION B-B

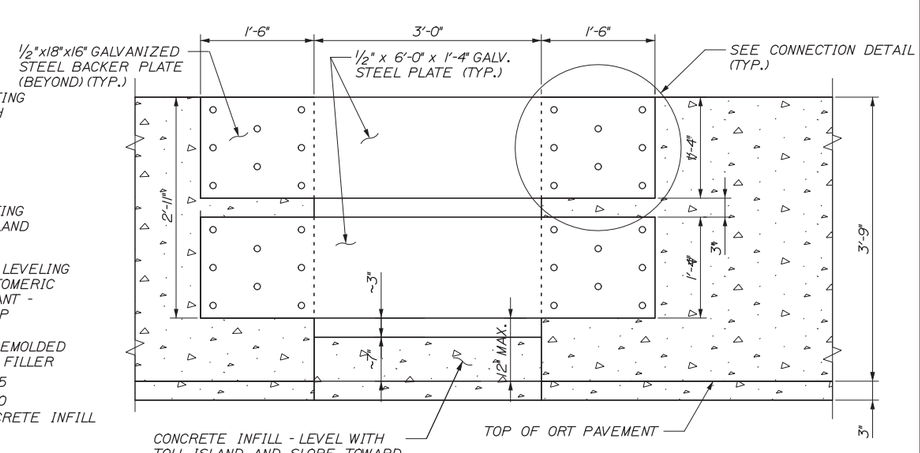

SECTION C-C

SCALE: 1" = 1'-0"

NOTES:
1. FURNISHING AND INSTALLING STEEL PLATES, BACKER PLATES AND FASTENERS AND DRILLING BARRIER SHALL BE INCIDENTAL TO THE CONCRETE BARRIER PAY ITEM.

Date:2/13/2015

Filename: 020_BarrierDet04.dgn

No.	Revision	By	Date

Scale:

Designed by: HNTB

CONSULTANT PROJECT MANAGER: R. Bruce Munger, P.E.

	By	Date		By	Date
Designed	RWH	02/15	Checked	RJD	02/15
Drawn	MPC	02/15	In Charge of	RAL	02/15

HNTB CORPORATION
340 County Road, Suite 6-C
Westbrook, ME 04092
TEL (207) 774-5155
FAX (207) 228-0909

MAINE TURNPIKE

THE GOLD STAR MEMORIAL HIGHWAY

MTA PROJECT MANAGER: William Yates

WEST GARDINER BARRIER TOLL PLAZA ORT CONVERSION

CONCRETE BARRIER DETAILS - 4

SHEET NUMBER: BAR-06

CONTRACT:2015.11

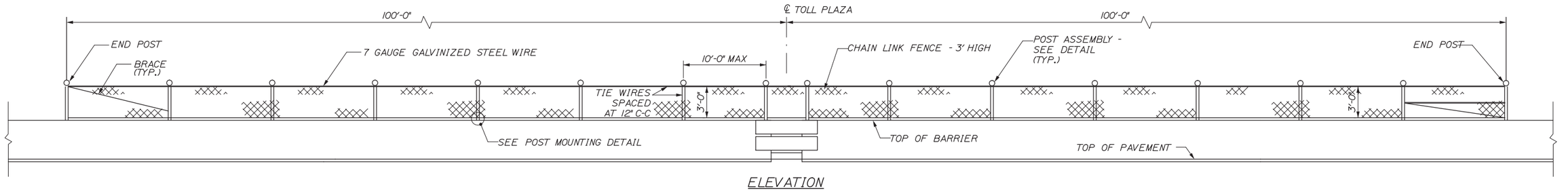

ELEVATION

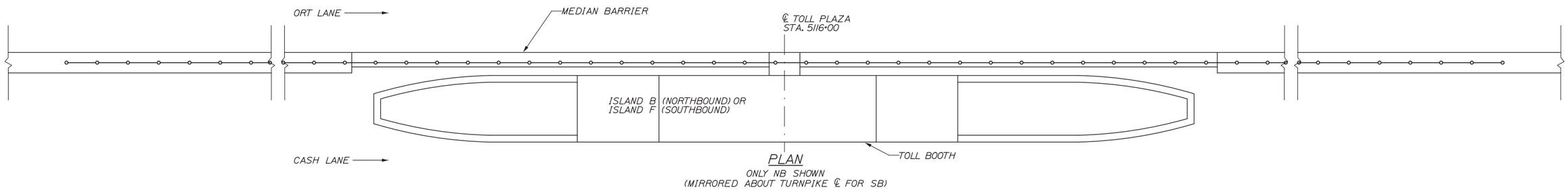

PLAN

ONLY NB SHOWN
(MIRRORED ABOUT TURNPIKE ℄ FOR SB)

BARRIER MOUNTED CHAIN LINK FENCE

SB ORT STA 115+00 TO STA 117+00
NB ORT STA 215+00 TO STA 217+00

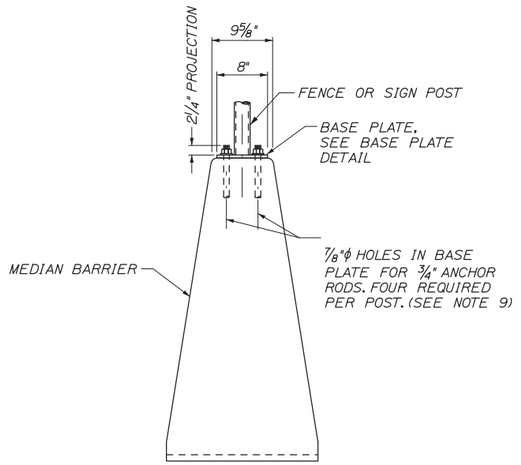

POST MOUNTING DETAIL

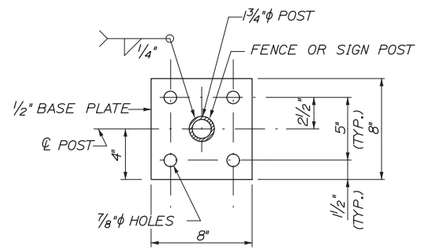

BASE PLATE DETAIL

POST ASSEMBLY FOR SIGN OR CHAIN LINK FENCE

NOTES:

1. BREAKAWAY POSTS SHALL NOT BE USED FOR BARRIER MOUNTED SIGNS OR FENCE.
2. DRILLING AND GROUTING OF BARRIER, FURNISHING AND INSTALLING OF ANCHOR RODS, AND BASE PLATES SHALL BE INCIDENTAL TO ITEM 607.41, POST ASSEMBLIES FOR SIGN OR CHAIN LINK FENCE.
3. ANCHOR RODS SHALL BE GROUTED TO BARRIER WITH A MATERIAL LISTED ON THE MAINE DEPARTMENT OF TRANSPORTATION PREQUALIFIED LIST OF CHEMICAL ANCHORING MATERIALS. ANCHOR RODS SHALL MEET THE REQUIREMENTS OF ASTM F1554, GRADE 55 AND BE SWEDGED OR THREADED ON THE EMBEDDED PORTION. THE DEPTH OF EMBEDMENT SHALL BE SUFFICIENT TO DEVELOP THE FULL TENSILE STRENGTH OF THE ANCHOR ROD.
4. BRACING AT ENDS OF FENCE SHALL BE INCIDENTAL TO THE FENCE. TENSION WIRE ALONG THE TOP OF THE FENCE SHALL BE INCIDENTAL TO THE FENCE.
5. SIGNS SHALL BE ANGLED TOWARD TRAFFIC SO THAT NO PORTION OF THE SIGN PROTRUDES BEYOND THE LIMIT OF THE TOP WIDTH OF THE BARRIER.
6. BOTTOM OF SIGN SHALL BE MOUNTED 5'-0" ABOVE THE EDGE OF PAVEMENT ON THE HIGH SIDE.
7. ATTACHMENT OF SIGNS TO POSTS MUST PREVENT ROTATION. HARDWARE SHALL BE GALVANIZED OR STAINLESS STEEL AND WILL BE INCIDENTAL TO THE SIGN. METHOD SHALL BE APPROVED BY RESIDENT.
8. ALL EXPOSED STEEL SHALL BE HOT DIPPED GALVANIZED UNLESS NOTED OTHERWISE.
9. THE POST ANCHOR RODS SHALL BE LOCATED TO AVOID CONFLICTS WITH THE BARRIER REINFORCING STEEL. AT THE CONTRACTOR'S OPTION, ANCHORAGES MAY BE PRECAST IN TO THE BARRIER. DETAILS FOR ANCHORAGES TO BE PRECAST INTO THE BARRIER SHALL BE SUBMITTED TO THE RESIDENT FOR APPROVAL.
10. CHAIN LINK SHALL BE STANDARD 2" MESH NO. 9 BARBED FINISH. POSTS SHALL BE HOT DIP GALVANIZED.

Date:2/13/2015

Filename: 021_BarrierFence.dgn

Scale: NOT TO SCALE

No.	Revision	By	Date

Designed by: HNTB

CONSULTANT PROJECT MANAGER: R. Bruce Munger, P.E.

	By	Date		By	Date
Designed	RWH	02/15	Checked	RJD	02/15
Drawn	MPC	02/15	In Charge of	RAL	02/15

HNTB CORPORATION
340 County Road, Suite 6-C
Westbrook, ME 04092
TEL (207) 774-5155
FAX (207) 228-0909

MAINE TURNPIKE

THE GOLD STAR MEMORIAL HIGHWAY

MTA PROJECT MANAGER: William Yates

WEST GARDINER BARRIER TOLL PLAZA ORT CONVERSION

BARRIER MOUNTED CHAIN LINK FENCE AND SIGN DETAILS

SHEET NUMBER: BAR-07

CONTRACT:2015.11

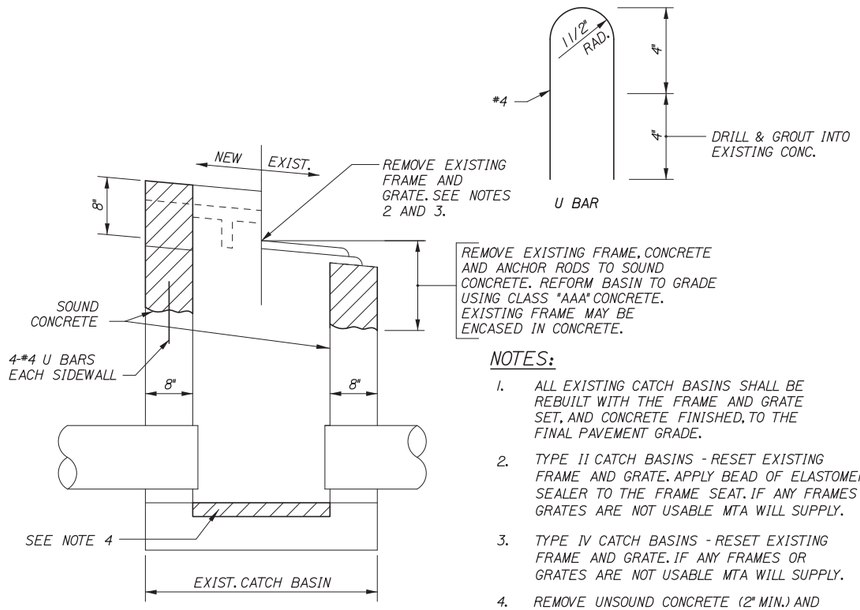

NOTES:

1. ALL EXISTING CATCH BASINS SHALL BE REBUILT WITH THE FRAME AND GRATE SET, AND CONCRETE FINISHED, TO THE FINAL PAVEMENT GRADE.
2. TYPE II CATCH BASINS - RESET EXISTING FRAME AND GRATE. APPLY BEAD OF ELASTOMERIC SEALER TO THE FRAME SEAT. IF ANY FRAMES OR GRATES ARE NOT USABLE MTA WILL SUPPLY.
3. TYPE IV CATCH BASINS - RESET EXISTING FRAME AND GRATE. IF ANY FRAMES OR GRATES ARE NOT USABLE MTA WILL SUPPLY.
4. REMOVE UNSOUND CONCRETE (2" MIN.) AND REPLACE WITH NEW CONCRETE IF DIRECTED BY THE RESIDENT.

REBUILD CATCH BASIN TO GRADE - TYPES II AND IV

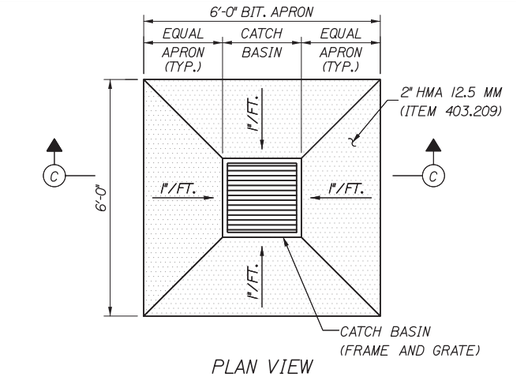

PLAN VIEW

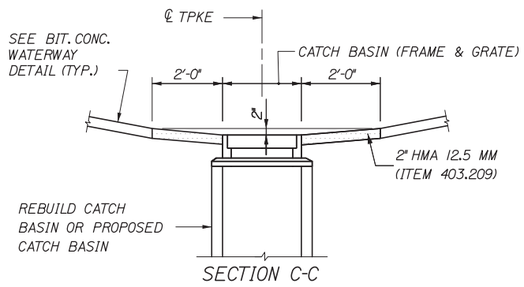

SECTION C-C

CATCH BASIN IN MEDIAN

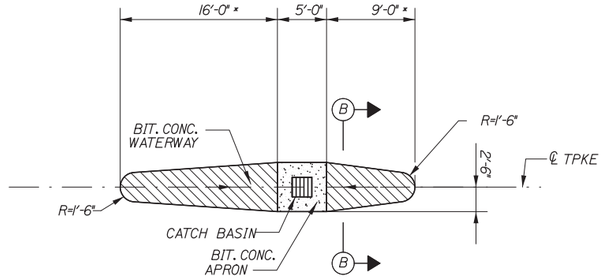

PLAN VIEW

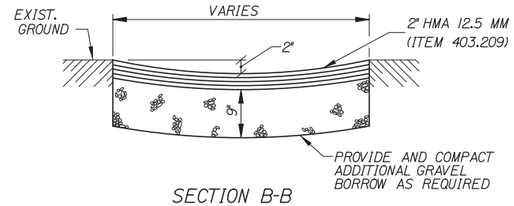

SECTION B-B

BITUMINOUS CONCRETE WATERWAY, TYPE II

NOTES:

1. SHADED AREA REPRESENTS APPROXIMATE LIMITS OF PAVEMENT DEPRESSION.
2. GRATE SHALL BE PLACED 1½" BELOW AND PARALLEL TO THE NORMAL PAVEMENT GRADE.
3. FRESHLY PLACED PAVEMENT SHALL BE REMOVED BEFORE COMPACTING DEPRESSED AREA.

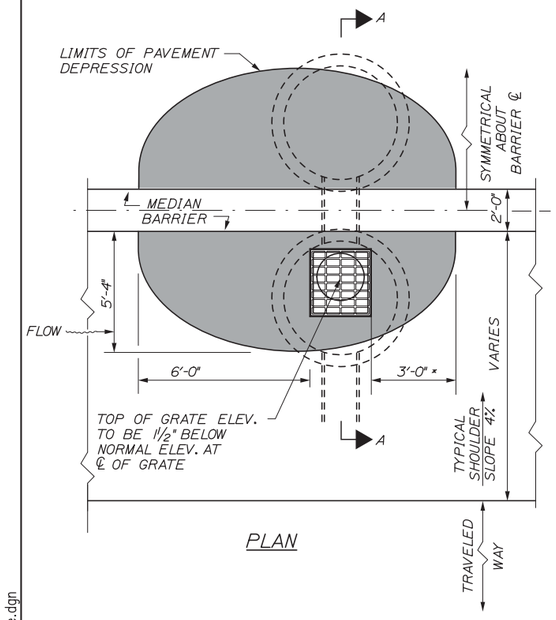

PLAN

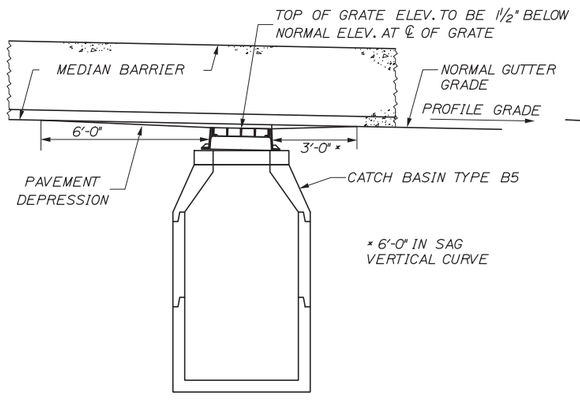

ELEVATION

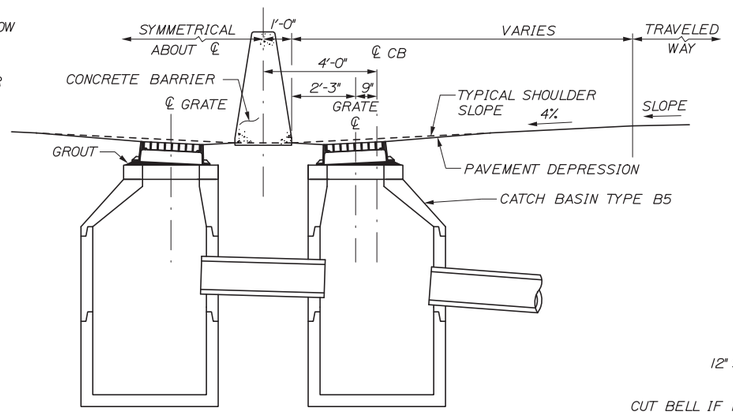

SECTION A-A

PLACEMENT OF DRAINAGE STRUCTURES ALONG BARRIER

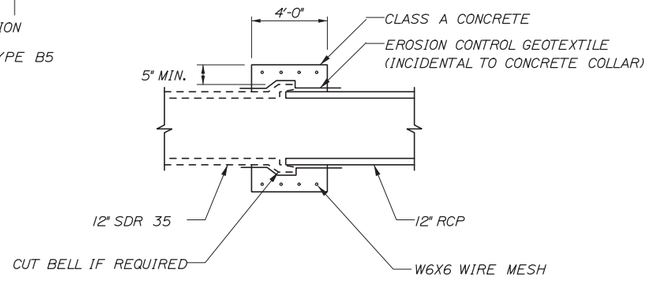

CONCRETE COLLAR FOR UNMATCHED DRAINAGE PIPES

Date:2/13/2015

Filename: 022_MedianDrainage.dgn

Scale: NOT TO SCALE

No.	Revision	By	Date

Designed by: HNTB

CONSULTANT PROJECT MANAGER: R. Bruce Munger, P.E.

	By	Date		By	Date
Designed	HME	02/15	Checked	LZD	02/15
Drawn	MPC	02/15	In Charge of	RAL	02/15

HNTB CORPORATION
340 County Road, Suite 6-C
Westbrook, ME 04092
TEL (207) 774-5155
FAX (207) 228-0909

MAINE TURNPIKE

THE GOLD STAR MEMORIAL HIGHWAY

MTA PROJECT MANAGER: William Yates

WEST GARDINER BARRIER TOLL PLAZA ORT CONVERSION

DRAINAGE DETAILS

SHEET NUMBER: --

CONTRACT:2015.11

DIMENSIONS FOR SLOPE OF 2:1

D	a (FT)	b (FT)	c (FT)	e (FT)	f (FT)	g (FT)	STONE DEPTH (FT)	STONE (CY)
12"	1.00	4.00	3.00	2.00	6.00	1.00	1.50	1.30
15"	1.00	4.50	3.37	2.25	6.75	1.63	1.50	1.70
18"	1.00	5.00	3.75	2.50	7.50	2.25	1.50	2.09
21"	1.00	5.50	4.13	2.75	8.25	2.88	1.50	2.58
24"	1.00	6.00	4.50	3.00	9.00	3.50	1.50	3.12
30"	1.00	7.00	5.25	3.50	10.50	4.75	1.50	4.33
36"	1.00	8.00	6.00	4.00	12.00	6.00	1.50	5.75
42"	1.00	9.00	6.75	4.50	13.50	7.25	1.50	7.37
48"	1.00	10.00	7.50	5.00	15.00	8.50	1.50	9.18
54"	1.00	11.00	8.25	5.50	16.50	9.75	1.50	11.19
60"	1.00	12.00	9.00	6.00	18.00	11.00	1.50	13.40
66"	1.00	13.00	9.75	6.50	19.50	12.25	1.50	15.81
72"	1.00	14.00	10.50	7.00	21.00	13.50	1.50	18.41
84"	1.00	16.00	12.00	8.00	24.00	16.00	1.50	24.22

DIMENSIONS FOR SLOPE OF 4:1

D	a (FT)	b (FT)	c (FT)	e (FT)	f (FT)	g (FT)	STONE DEPTH (FT)	STONE (CY)
12"	1.00	8.00	6.00	2.00	6.00	0.00	1.50	2.20
15"	1.00	9.00	6.75	2.25	6.75	0.00	1.50	2.80
18"	1.00	10.00	7.50	2.50	7.50	0.00	1.50	3.40
21"	1.00	11.00	8.25	2.75	8.25	0.00	1.50	4.10
24"	1.00	12.00	9.00	3.00	9.00	0.00	1.50	4.86
30"	1.00	14.00	10.50	3.50	10.50	0.00	1.50	6.58
36"	1.00	16.00	12.00	4.00	12.00	0.00	1.50	8.56
42"	1.00	18.00	13.50	4.50	13.50	0.50	1.50	10.92
48"	1.00	20.00	15.00	5.00	15.00	1.00	1.50	13.57
54"	1.00	22.00	16.50	5.50	16.50	1.50	1.50	16.50
60"	1.00	24.00	18.00	6.00	18.00	2.00	1.50	19.72
66"	1.00	26.00	19.50	6.50	19.50	2.50	1.50	23.22
72"	1.00	28.00	21.00	7.00	21.00	3.00	1.50	27.01
84"	1.00	32.00	24.00	8.00	24.00	4.00	1.50	35.45

DIMENSIONS FOR SLOPE OF 6:1

D	a (FT)	b (FT)	c (FT)	e (FT)	f (FT)	g (FT)	STONE DEPTH (FT)	STONE (CY)
12"	0.50	9.00	7.50	1.50	4.50	0.00	1.50	2.30
15"	0.50	10.50	8.75	1.75	5.50	0.00	1.50	2.93
18"	0.50	12.00	10.00	2.00	6.50	0.00	1.50	3.57
21"	0.50	13.50	11.25	2.25	7.25	0.00	1.50	4.46
24"	0.50	15.00	12.50	2.50	8.00	0.00	1.50	5.44
30"	0.50	18.00	15.00	3.00	9.50	0.00	1.50	7.71
36"	0.50	21.00	17.50	3.50	11.00	0.00	1.50	10.37
42"	0.50	24.00	20.00	4.00	12.50	0.00	1.50	13.42
48"	0.50	27.00	22.50	4.50	14.00	0.00	1.50	16.87
54"	0.50	30.00	25.00	5.00	15.50	0.00	1.50	20.70
60"	0.50	33.00	27.50	5.50	17.00	0.00	1.50	24.93
66"	0.50	36.00	30.00	6.00	18.50	0.00	1.50	29.55
72"	0.50	39.00	32.50	6.50	20.00	0.00	1.50	34.56
84"	0.50	45.00	37.50	7.50	23.00	0.00	1.50	45.76

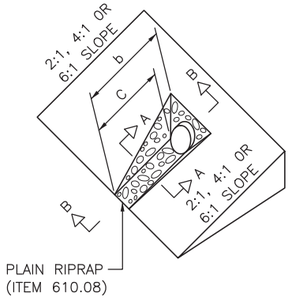

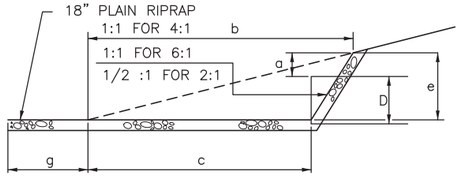

SECTION B-B

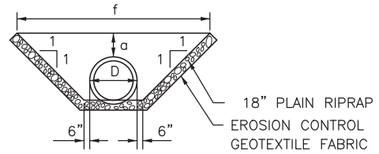

SECTION A-A

ROADWAY CULVERT END
SLOPE TREATMENT

NOTES:

1. THE DIMENSIONS SHOWN ARE APPROXIMATE AND MAY BE MODIFIED BY THE RESIDENT.
2. STONE QUANTITIES ARE FOR ONE END OF THE PIPE.

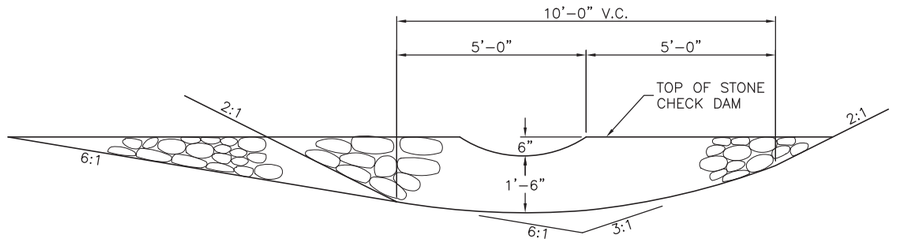

SECTION

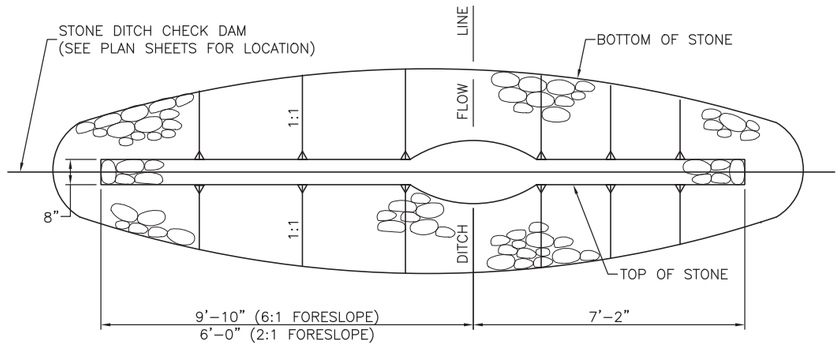

PLAN

STONE CHECK DAM

1" = 2-0"

FORESLOPE	BACKSLOPE	QUANTITY C.Y. STONE
6:1	3:1	2.5
2:1	3:1	2.0

NOTES:

1. STONE FOR TEMPORARY AND PERMANENT STONE CHECK DAMS SHALL MEET THE REQUIREMENTS OF MDOT SPECIFICATION 703.29, STONE DITCH PROTECTION.
2. TEMPORARY STONE CHECK DAMS WILL BE PAID FOR UNDER ITEM 610.181.
3. PERMANENT STONE CHECK DAMS WILL BE PAID FOR UNDER ITEM 610.182.

Date:2/13/2015

Filename: 023_Erosion_Con_Det1.dgn

Scale:

No.	Revision	By	Date

Designed by: HNTB

CONSULTANT PROJECT MANAGER: R. Bruce Munger, P.E.

	By	Date		By	Date
Designed	LZD	02/15	Checked	TMH	02/15
Drawn	MPC	02/15	In Charge of	RAL	02/15

HNTB CORPORATION
340 County Road, Suite 6-C
Westbrook, ME 04092
TEL (207) 774-5155
FAX (207) 228-0909

MAINE TURNPIKE

THE GOLD STAR MEMORIAL HIGHWAY

MTA PROJECT MANAGER: William Yates

WEST GARDINER BARRIER TOLL PLAZA ORT CONVERSION

EROSION CONTROL DETAILS

SHEET NUMBER: DET-02

CONTRACT:2015.11

Date:2/13/2015

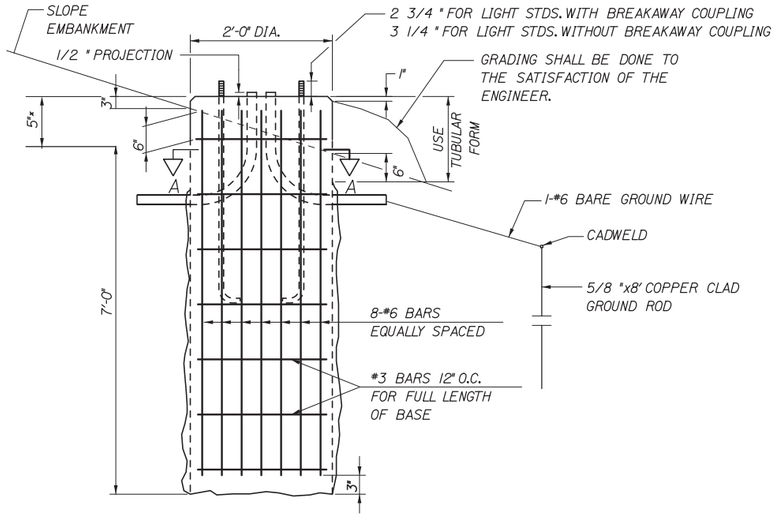

24 INCH FOUNDATION

NOT TO SCALE

NOTE:
WHERE SOLID ROCK IS ENCOUNTERED AT LESS THAN THE REQUIRED DISTANCE BELOW GROUND LEVEL, REINFORCING STEEL SHALL BE DOWELED INTO LEDGE AS SHOWN ON MAINE DOT STANDARD DETAIL 626(06). PAYMENT SHALL BE INCIDENTAL TO THE FOUNDATION PAY ITEM.

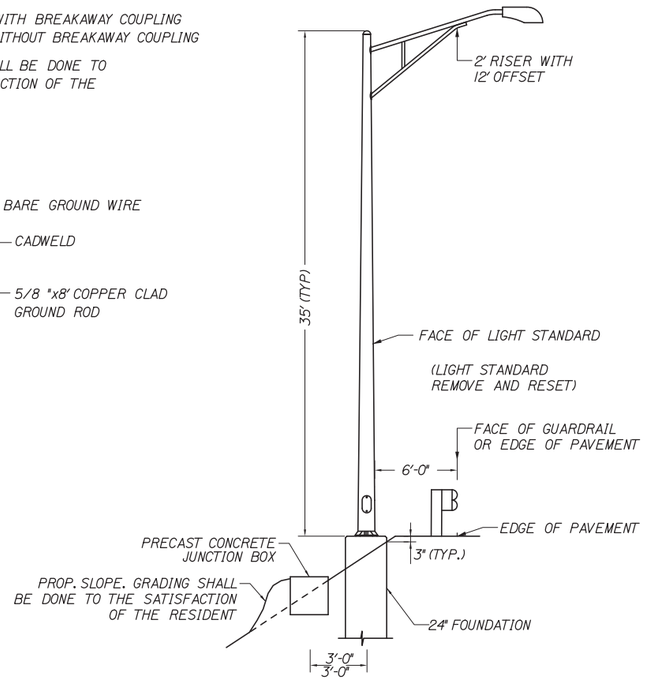

PLACEMENT OF LIGHT STANDARD

NO SCALE

NOTE:
SPLICES IN BOX SHALL BE MADE WITH ILSCO USPA-350-SS-DB SAFETYSUB WATER TIGHT DIRECT BURY SPLICE WIRE RANGE 350MCM-10-STR, ONLY. PROVIDE ENOUGH SLACK IN THE WIRE TO ALLOW REMOVAL OF SPLICES AND NEATLY ARRANGE WIRE IN BOX.

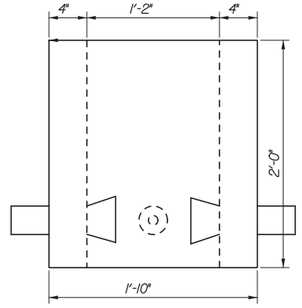

ELEVATION

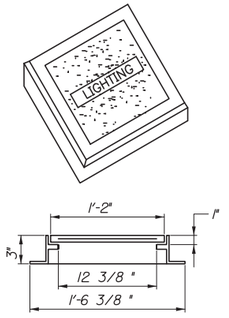

ELECTRICAL PULL BOX COVER

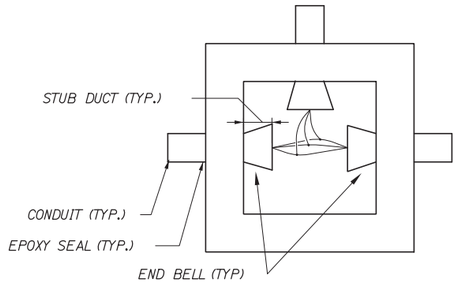

TOP

PRECAST CONCRETE JUNCTION BOX

NOT TO SCALE

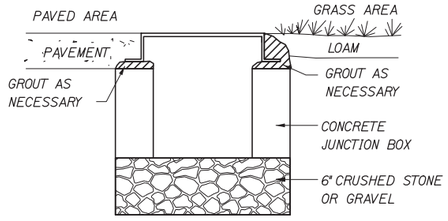

JUNCTION BOX COVER & FRAME

NOTE:
INSTALL JUNCTION BOXES ON GRADE, GROUT AS NECESSARY AS SHOWN ABOVE.

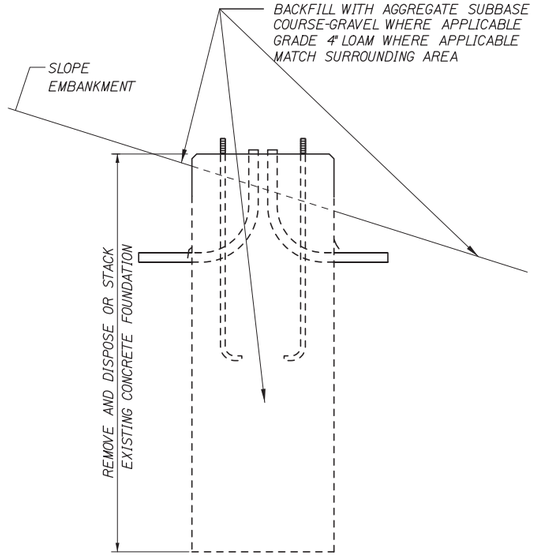

REMOVAL OF CONCRETE FOUNDATION

NOT TO SCALE

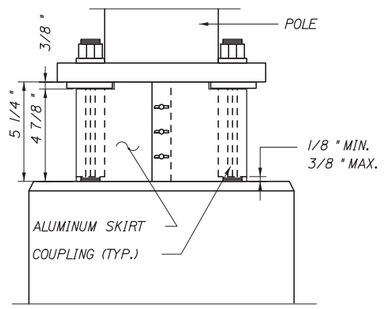

BREAKAWAY COUPLINGS AND SKIRT DETAIL *

NOT TO SCALE

* BREAKAWAY COUPLINGS SHALL BE REQUIRED ON ALL NEW LIGHT STANDARDS

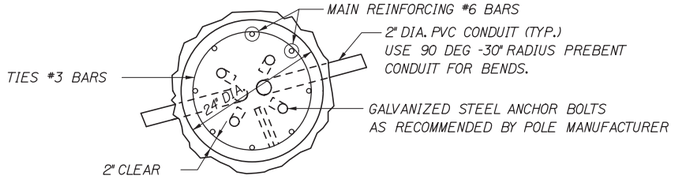

SECTION A-A

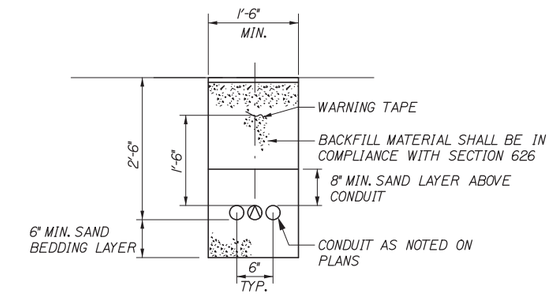

TRENCH CROSS SECTION

NOT TO SCALE

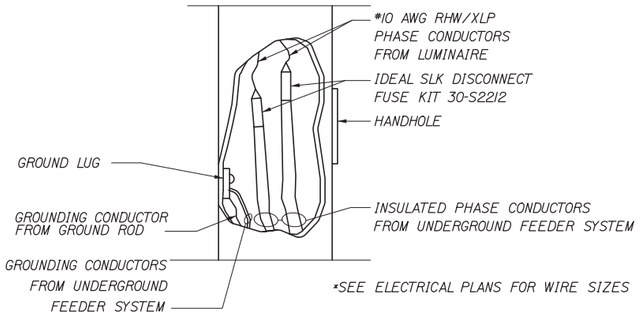

TYPICAL POLE WIRING DETAIL

NOT TO SCALE

Filename: 024_LightingDets.dgn

Scale:

No.	Revision	By	Date

Designed by: HNTB

CONSULTANT PROJECT MANAGER: R. Bruce Munger, P.E.

	By	Date		By	Date
Designed	LZD	02/15	Checked	RBM	02/15
Drawn	MPC	02/15	In Charge of	RAL	02/15

HNTB CORPORATION
340 County Road, Suite 6-C
Westbrook, ME 04092
TEL (207) 774-5155
FAX (207) 228-0909

MAINE TURNPIKE

THE GOLD STAR MEMORIAL HIGHWAY

MTA PROJECT MANAGER: William Yates

WEST GARDINER BARRIER TOLL PLAZA ORT CONVERSION

LIGHTING DETAILS

SHEET NUMBER: LDET-01

CONTRACT:2015.11

Date:2/13/2015

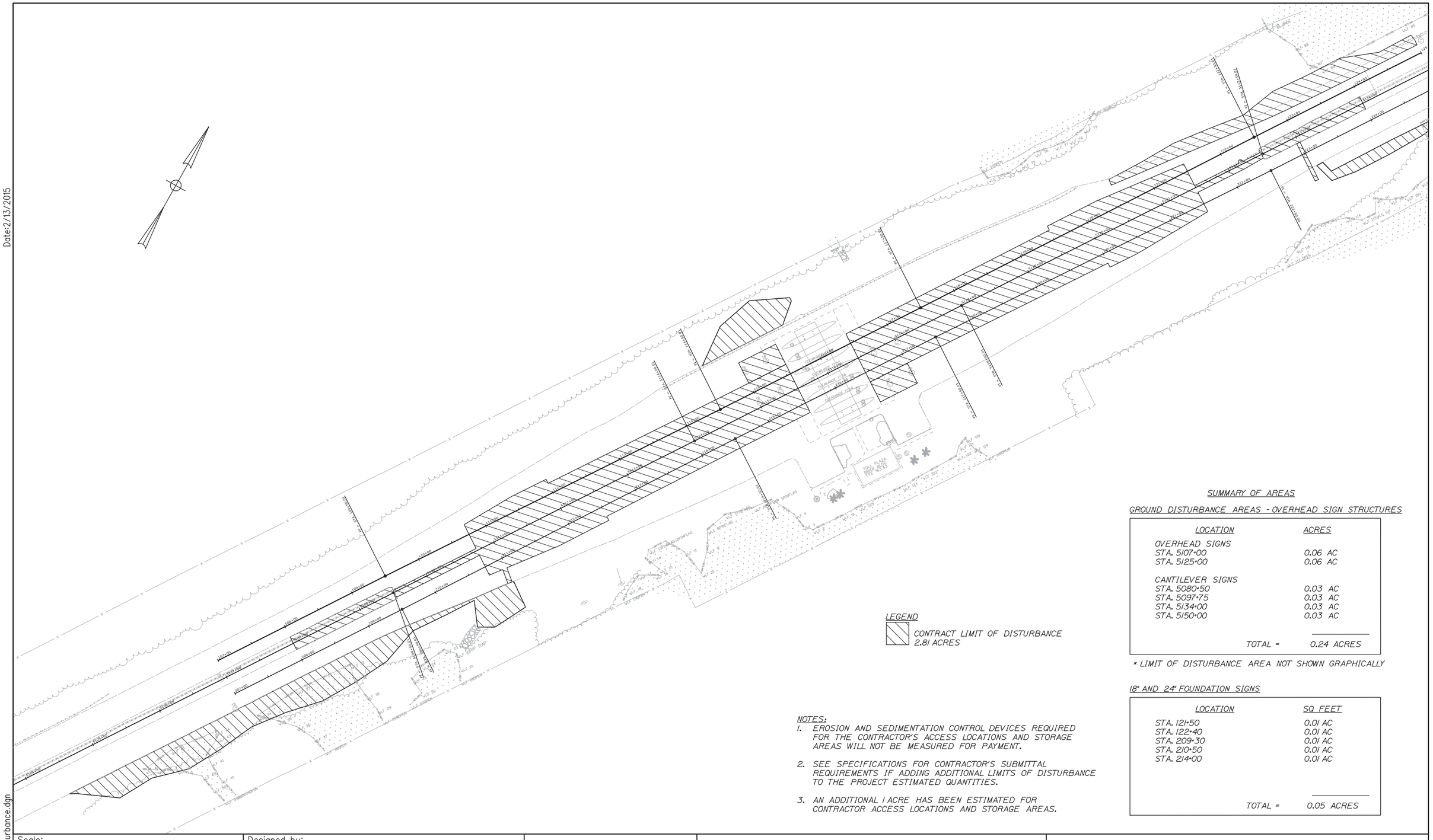

SUMMARY OF AREAS

GROUND DISTURBANCE AREAS - OVERHEAD SIGN STRUCTURES

LOCATION	ACRES
OVERHEAD SIGNS	
STA. 5107+00	0.06 AC
STA. 5125+00	0.06 AC
CANTILEVER SIGNS	
STA. 5080+50	0.03 AC
STA. 5097+75	0.03 AC
STA. 5134+00	0.03 AC
STA. 5150+00	0.03 AC
TOTAL =	0.24 ACRES

* LIMIT OF DISTURBANCE AREA NOT SHOWN GRAPHICALLY

LEGEND

CONTRACT LIMIT OF DISTURBANCE
2.81 ACRES

18" AND 24" FOUNDATION SIGNS

LOCATION	SQ FEET
STA. 121+50	0.01 AC
STA. 122+40	0.01 AC
STA. 209+30	0.01 AC
STA. 210+50	0.01 AC
STA. 214+00	0.01 AC
TOTAL =	0.05 ACRES

NOTES:

1. EROSION AND SEDIMENTATION CONTROL DEVICES REQUIRED FOR THE CONTRACTOR'S ACCESS LOCATIONS AND STORAGE AREAS WILL NOT BE MEASURED FOR PAYMENT.
2. SEE SPECIFICATIONS FOR CONTRACTOR'S SUBMITTAL REQUIREMENTS IF ADDING ADDITIONAL LIMITS OF DISTURBANCE TO THE PROJECT ESTIMATED QUANTITIES.
3. AN ADDITIONAL 1 ACRE HAS BEEN ESTIMATED FOR CONTRACTOR ACCESS LOCATIONS AND STORAGE AREAS.

Scale:

No.	Revision	By	Date

Designed by: HNTB

CONSULTANT PROJECT MANAGER: R. Bruce Munger, P.E.

	By	Date		By	Date
Designed	TMH	02/15	Checked	LZD	02/15
Drawn	MPC	02/15	In Charge of	RAL	02/15

HNTB CORPORATION
340 County Road, Suite 6-C
Westbrook, ME 04092
TEL (207) 774-5155
FAX (207) 228-0909

MAINE TURNPIKE

THE GOLD STAR MEMORIAL HIGHWAY

MTA PROJECT MANAGER: William Yates

WEST GARDINER BARRIER TOLL PLAZA ORT CONVERSION

LIMIT OF DISTURBANCE

SHEET NUMBER: LOD-01

CONTRACT:2015.11

Filename: 025_Limit of Disturbance.dgn

ITEM 606.65 GUARDRAIL THRIE BEAM - SINGLE RAIL	LF
STA. 5103+12.50, MEDIAN TO STA. 5107+50.00, MEDIAN	437.5

ITEM 606.701 ASYMMETRICAL THRIE BEAM TRANSITION	EA
STA. 5103+06.25, MEDIAN	1

ITEM 606.80 GUARDRAIL 350 FLEAT TERMINAL	EA
STA. 5105+12.50, RT.	1

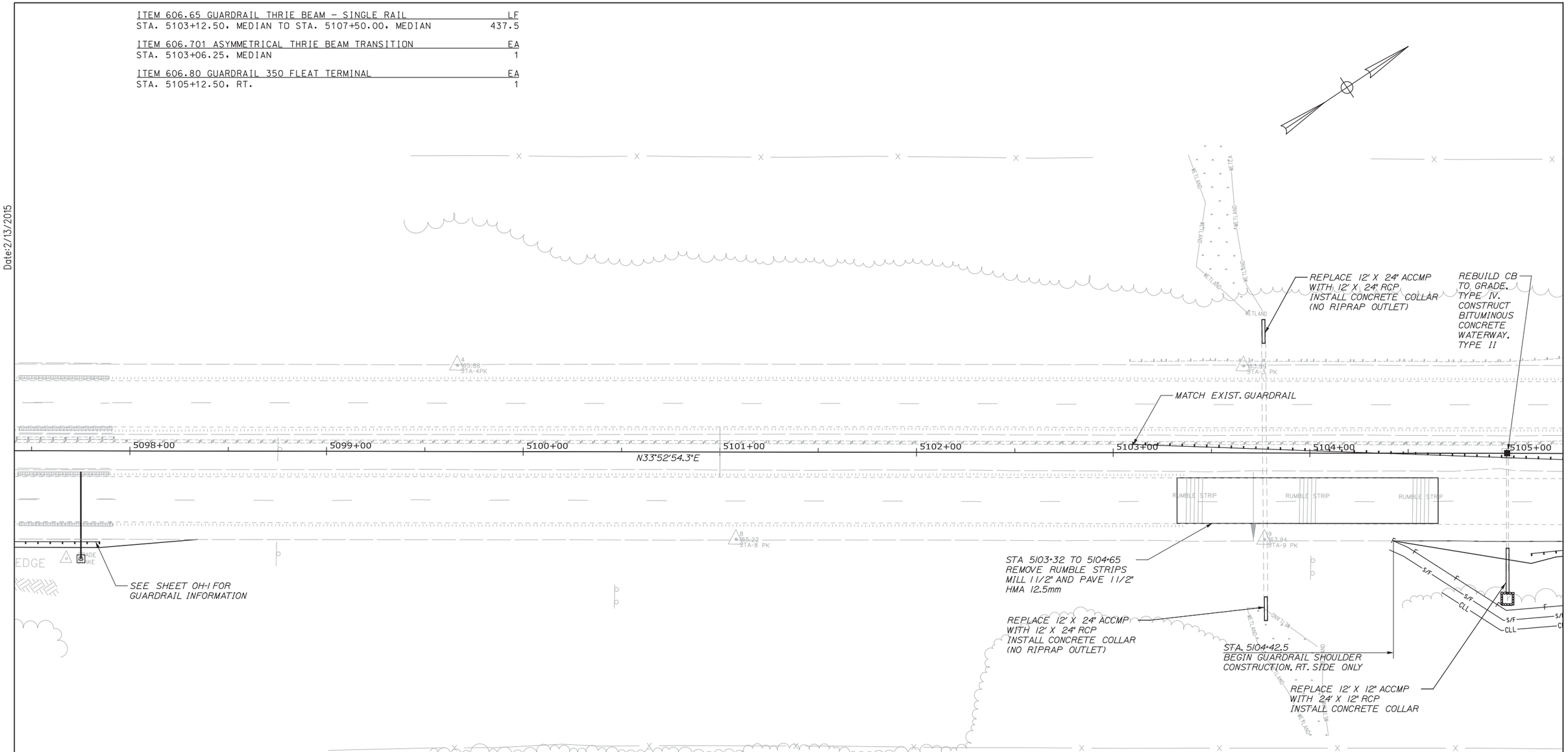

LEGEND

- E — ELECTRICAL CONDUIT (1 - 2" CONDUIT WIRE SIZES AS NOTED ON PLANS)
- □ CONCRETE JUNCTION BOX
- RESET LIGHT STANDARD ON 24" ϕ CONCRETE FOUNDATION

NOTE:
THE CULVERT CROSSING AT STATION 5103+77 IS LOCATED WITHIN A STREAM. ALL WORK ASSOCIATED WITH THIS CROSSING MUST CONFORM TO THE U.S. ARMY CORPS OF ENGINEERS MAINE GENERAL PERMIT INCLUDED IN THE SPECIFICATIONS. REPLACEMENT OF THE CULVERT ENDS SHALL BE DONE IN A MANNER TO AVOID A "HANGING" INLET OR OUTLET AND MATCH EXISTING STREAM BED ELEVATION. DISTURBANCES TO STREAM BELOW ORDINARY HIGH WATER (OHW) SHALL BE MINIMIZED BY USE OF COFFERDAMS, SILT SCREENS ETC. BANK STABILIZATION ABOVE THE OHW MUST UTILIZE EROSION CONTROLS. SEE SECTION 22-STREAM WORK & CROSSINGS, CONDITIONS H, I & J OF THE GENERAL PERMIT FOR ADDITIONAL INFORMATION.

Scale: 25 0 25 50
SCALE IN FEET

No.	Revision	By	Date

Designed by: HNTB

CONSULTANT PROJECT MANAGER: R. Bruce Munger, P.E.

	By	Date		By	Date
Designed	CJG	02/15	Checked	LZD	02/15
Drawn	MPC	02/15	In Charge of	RAL	02/15

HNTB CORPORATION
340 County Road, Suite 6-C
Westbrook, ME 04092
TEL (207) 774-5155
FAX (207) 228-0909

MAINE TURNPIKE

THE GOLD STAR MEMORIAL HIGHWAY

MTA PROJECT MANAGER: William Yates

WEST GARDINER BARRIER TOLL PLAZA ORT CONVERSION

GENERAL PLAN 1

SHEET NUMBER: GP-01

CONTRACT:2015.11

Date:2/13/2015

Filename: 026_HDPlan.dgn

Date:2/13/2015

ITEM 526.351 MEDIAN BARRIER TYPE I	LF
STA. 5110+00.0, MEDIAN TO STA. 5114+62.0, MEDIAN	462
ITEM 526.3511 MEDIAN BARRIER TYPE IA	**LF**
STA. 212+20.0, RT. TO STA. 215+35.0, RT.	315
STA. 111+50.0, LT. TO STA. 114+92.0, LT.	342
ITEM 526.361 MEDIAN BARRIER TRANSITION TYPE I	**EA**
STA. 212+00.0, RT.	1
STA. 5109+80.0, MEDIAN	1
ITEM 527.305 ENERGY ABSORBING SYSTEM (CAT)-REMOVE AND STACK	**EA**
STA. 5109+65	1

ITEM 527.306 FasTRACC	EA
STA. 211+73.5, RT.	1
ITEM 606.1723 BRIDGE TRANSITION - TYPE III	**EA**
STA. 5109+61.85, MEDIAN	1
ITEM 606.24 GUARDRAIL TYPE 3D - SINGLE RAIL	**LF**
STA. 5105+50.00, RT TO STA. 5107+00.00, RT	150
ITEM 606.278 TERMINAL END - ANCHORED END	**EA**
STA. 5107+00, RT.	1
ITEM 606.3606 GUARDRAIL REMOVE, MODIFY AND RESET, DOUBLE RAIL	**LF**
STA. 5108+11.85, MEDIAN TO STA. 5109+61.85, MEDIAN	150
ITEM 606.66 TERMINAL END THRIE BEAM	**EA**
STA. 5107+50.00, MEDIAN	1

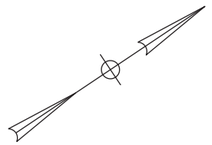

REBUILD CB TO GRADE, TYPE IV. CONSTRUCT BITUMINOUS CONCRETE WATERWAY, TYPE II

STA. 107+00.00 BEGIN 2" MILL, SHIM AND PAVE (CASH, ORT LANES AND GORE) MATCH EXIST. GRADE

MATCH EXIST. GUARDRAIL

CONSTRUCT BITUMINOUS CONCRETE WATERWAY, TYPE II

GUARDRAIL TYPE 3d REMOVE MODIFY AND RESET DOUBLE RAIL

R=2000'

PI = STA. 109+50.01

STA. 110+75.00 END 2" MILL, SHIM AND PAVE (CASH, ORT LANES AND GORE) MATCH EXIST. GRADE

STA. 110+75.00 BEGIN FULL DEPTH PAVEMENT EXCAVATION (ORT LANES AND GORE) BEGIN 2" MILL, SHIM AND PAVE (CASH LANE OUTSIDE SHOULDER)

REMOVE AND STACK CAT-350

MEDIAN BARRIER TRANSITION TYPE I

3-#6, 1-#10 IN A 2" SCH 80 PVC CONDUIT

MEDIAN BARRIER TYPE IA

THRIE BEAM - SINGLE RAIL

TERMINAL END - ANCHORED END

GUARDRAIL FLEAT 350

GUARDRAIL TYPE 3d

THRIE BEAM TERMINAL END

TERMINAL END - ANCHORED END

CLEARING BY OTHERS (TYP.)

OVERHEAD SIGN STRUCTURE AND FOUNDATION (SEE SIGNING AND STRIPING PLANS)

STA. 5108+00 BEGIN MEDIAN PAVEMENT CONSTRUCTION.

STA. 207+00.00 BEGIN 2" MILL, SHIM AND PAVE (CASH, ORT LANES AND GORE) MATCH EXIST. GRADE BEGIN SHOULDER CONSTRUCTION

STA. 5109+51.03 END MEDIAN PAVEMENT CONSTRUCTION

PI = STA. 5109+50.01

PI = STA. 209+50.01

STA. 210+42.10 END SHOULDER CONSTRUCTION RT. SIDE ONLY

RIP RAP

STA. 211+25.00 END 2" MILL, SHIM AND PAVE (CASH LANES) MATCH EXIST. GRADE

STA. 211+25.00 BEGIN 2" MILL, SHIM AND PAVE (CASH LANE OUTSIDE SHOULDER)

STA. 210+75.00 END 2" MILL, SHIM AND PAVE (ORT LANES AND GORE) MATCH EXIST. GRADE

STA. 210+75.00 BEGIN FULL DEPTH PAVEMENT EXCAVATION (ORT LANES AND GORE)

REMOVE FasTRACC CB & PIPE

SAWCUT (TYP.)

ELECTRICAL BOX

BARRIER MOUNTED FLASHING BEACON (SOLAR)

MEDIAN BARRIER TRANSITION TYPE I

3-#6, 1-#10 IN A 2" SCH 80 PVC CONDUIT

RADIO REPEATER ON CONCRETE

6-STRAND FIBER OPTIC CABLE FROM HAR TO TOLL BUILDING IN EXISTING CONDUIT

SB ORT ℄

NB ORT ℄

MAINE TURNPIKE

12" RCP CLASS III

15" RCP CLASS III

18" RCP CLASS III

TYPE B5

30:1 FLARE

N33°52'6.3"E

N33°52'54.3"E

N33°55'20.8"E

N34°14'38.3"E

N33°55'8.8"E

N33°33'42.5"E

LEGEND

- ELECTRICAL CONDUIT (1 - 2" CONDUIT WIRE SIZES AS NOTED ON PLANS)
- CONCRETE JUNCTION BOX
- RESET LIGHT STANDARD ON 24" ϕ CONCRETE FOUNDATION

Scale: 25 0 25 50 SCALE IN FEET

No.	Revision	By	Date

Designed by: HNTB

CONSULTANT PROJECT MANAGER: R. Bruce Munger, P.E.

	By	Date		By	Date
Designed	CJG	02/15	Checked	LZD	02/15
Drawn	MPC	02/15	In Charge of	RAL	02/15

HNTB CORPORATION
340 County Road, Suite 6-C
Westbrook, ME 04092
TEL (207) 774-5155
FAX (207) 228-0909

MAINE TURNPIKE

THE GOLD STAR MEMORIAL HIGHWAY

MTA PROJECT MANAGER: William Yates

WEST GARDINER BARRIER TOLL PLAZA ORT CONVERSION

GENERAL PLAN 2

SHEET NUMBER: GP-02

CONTRACT:2015.11

Filename: 027_HDPlan.dgn

ITEM 526.351 MEDIAN BARRIER TYPE I	LF
STA. 5117+38.0, MEDIAN TO STA. 5122+00.0, MEDIAN	462

ITEM 526.3511 MEDIAN BARRIER TYPE IA	LF
STA. 116+65.0, LT. TO STA. 119+80.0, LT.	315
STA. 217+28.0, RT. TO STA. 220+41.0, RT.	313

ITEM 526.3512 MEDIAN BARRIER TYPE IB	LF
STA. 216+45.0, RT. TO STA. 217+08.0, RT.	63
STA. 114+92.0, LT. TO STA. 115+55.0, LT.	63

ITEM 526.3513 MEDIAN BARRIER TYPE IC	LF
STA. 215+35.0, RT. TO STA. 215+55.0, RT.	20
STA. 116+45.0, LT. TO STA. 116+65.0, LT.	20

ITEM 526.352 MEDIAN BARRIER TYPE II	LF
STA. 5114+92.0, MEDIAN TO STA. 5115+10.25, MEDIAN	18.25
STA. 5115+14.25, MEDIAN TO STA. 5115+43.5, MEDIAN	29.25
STA. 5115+47.5, MEDIAN TO STA. 5116+52.5, MEDIAN	105.0
STA. 5116+56.5, MEDIAN TO STA. 5116+85.75, MEDIAN	29.25
STA. 5116+89.75, MEDIAN TO STA. 5117+08.0, MEDIAN	18.25

ITEM 526.353 MEDIAN BARRIER TYPE III	LF
STA. 115+55.0, LT. TO STA. 115+98.5, LT.	43.5
STA. 116+01.5, LT. TO STA. 116+45.0, LT.	43.5
STA. 215+55.0, RT. TO STA. 215+98.5, RT.	43.5
STA. 216+01.5, RT. TO STA. 216+45.0, RT.	43.5

ITEM 526.362 MEDIAN BARRIER TRANSITION TYPE II	EA
STA. 5114+62.0 TO STA. 5114+92.0, MEDIAN	1
STA. 5117+08.0 TO STA. 5117+38.0, MEDIAN	1

ITEM 607.40 CHAIN LINK FENCE - 3' HIGH	LF
STA. 215+00, RT. TO STA. 217+00, RT.	200
STA. 115+00, LT. TO STA. 117+00, LT.	200

ITEM 606.278 TERMINAL END - ANCHORED END	EA
STA. 5115+75, LT.	1

Date:2/13/2015

STA. 114+92.00
END FULL DEPTH
PAVEMENT EXCAVATION
(ORT LANE)

STA. 115+00 TO 115+55
2" MILL, 1/2" SHIM &
1/2" PAVE CASH LANES

STA. 116+65.00
BEGIN FULL DEPTH
PAVEMENT EXCAVATION
(ORT LANE)

STA. 116+45 TO 117+00
2" MILL, 1/2" SHIM &
1/2" PAVE CASH LANES

STA. 215+00 TO 215+55
2" MILL, 1/2" SHIM &
1/2" PAVE CASH LANES

STA. 216+45 TO 217+00
2" MILL, 1/2" SHIM &
1/2" PAVE CASH LANES

STA. 215+35.00
END FULL DEPTH
PAVEMENT EXCAVATION
(ORT LANE)

STA. 217+08.00
BEGIN FULL DEPTH
PAVEMENT EXCAVATION
(ORT LANE)

PI = STA. 114+50.01
PI = STA. 5114+00.01
PI = STA. 214+50.01
PI = STA. 117+50.01
PI = STA. 5118+00.01
PI = STA. 217+50.01

3-#6, 1-#10 IN A 2" SCH 80 PVC CONDUIT
REBUILD CATCH BASIN TO GRADE - TYPE II
REMOVE AND RESET LIGHT POLE
TOLL PLAZA ℄
TERMINAL END ANCHORED END
REMOVE AND REPLACE PAVEMENT SLAB IN LANES 1, 2, 7 AND 8
MEDIAN BARRIER TRANSITION (TYPE I)
MEDIAN BARRIER TYPE IA
MEDIAN BARRIER TYPE IB
ORT CONCRTE SLAB
EXTENDED ISLAND
SAWCUT
EXIST. APPROACH SLAB
MEDIAN BARRIER TYPE IC
3 FT CHAIN LINK FENCE
MEDIAN BARRIER TYPE III
MEDIAN BARRIER TYPE II
DEPARTURE SLAB
REMOVE PAVEMENT SLAB AND ISLANDS C, D, & E AND REPAIR STRUCTURAL SLAB
MEDIAN BARRIER TRANSITION TYPE II
ORT SPACE FRAME AND FOUNDATIONS (TYP.)
ORT CONCRETE SLAB
SAWCUT (TYP.)
REMOVE CB & PLUG PIPE
REMOVE CB
REPLACE 12" X 15" ACCMP WITH 12" X 15" RCP INSTALL CONCRETE COLLAR
6-STRAND FIBER OPTIC CABLE FROM HAR TO TOLL BUILDING IN EXISTING CONDUIT
ADJUST TO GRADE
TOLL PLAZA BRICK BLDG FFE 163.43
BUILDING ROOF OVERHANG
UNDERGROUND TANK COVERS
ANTENNA
SATELLITE DISH
VENT PIPE
STEEL COVER
RIP RAP
CANOPY
WETLAND

10.0'	12.0'	2+00	113+00	N34°14'38.3"E	12" RCP CLASS III	SB ORT ℄
114+00	N33°55'8.8"E	12" RCP CLASS III	REMOVE CB	TYPE B5 CB	5113+00	MAINE TURNPIKE ℄
12" RCP CLASS III	12.0'	2+00	N33°33'42.5"E	213+00	12" RCP CLASS III	MEDIAN BARRIER TYPE I
10.0'	NB ORT ℄	214+00	12" RCP CLASS III	215+00	N33°46'50.7"E	MEDIAN BARRIER TRANSITION TYPE II
114+00	N33°46'50.7"E	DEPARTURE SLAB	115+00	116+00	117+00	118+00
5114+00	5115+00	5116+00	5117+00	5118+00	5119+00	MEDIAN BARRIER TYPE I
N33°35'35.6"E	12.0'	10.0'	10.0'	TYPE B5 CB	12" RCP CLASS III	15" RCP CLASS III
N33°57'52.7"E	REMOVE CB	12" RCP CLASS III	12" RCP CLASS III	12.0'	218+00	219+00
N34°16'46.9"E	10.0'	DEPARTURE SLAB	216+00	217+00	218+00	219+00

LEGEND

ELECTRICAL CONDUIT (1 - 2" CONDUIT WIRE SIZES AS NOTED ON PLANS)

CONCRETE JUNCTION BOX

RESET LIGHT STANDARD ON 24" ϕ CONCRETE FOUNDATION

LEGEND

1 1/2" 12.5MM HMA (SURFACE) OVERLAY BUTT JOINT TO SHOULDER PAVEMENT SHALL BE INCIDENTAL TO ITEM 403.208

NOTES:
1. FOR INFORMATION ON PROPOSED PLAZA ISLANDS, ORT SLABS, SPACE FRAMES AND FOUNDATIONS, AND REMOVAL OF ISLANDS, APPROACH SLABS AND PAVEMENT SLAB, SEE STRUCTURAL PLANS.
2. FOR INFORMATION ON THE LIGHTNING SUPPRESSION SYSTEMS, SEE THE ELECTRICAL DETAILS.
3. CONTRACTOR SHALL MAINTAIN CANOPY DRAINAGE.

Filename: 028_HDPlan.dgn

Scale: 25 0 25 50
SCALE IN FEET

No.	Revision	By	Date

Designed by: HNTB

CONSULTANT PROJECT MANAGER: R. Bruce Munger, P.E.

	By	Date		By	Date
Designed	CJG	02/15	Checked	LZD	02/15
Drawn	MPC	02/15	In Charge of	RAL	02/15

HNTB CORPORATION
340 County Road, Suite 6-C
Westbrook, ME 04092
TEL (207) 774-5155
FAX (207) 228-0909

MAINE TURNPIKE

THE GOLD STAR MEMORIAL HIGHWAY

MTA PROJECT MANAGER: William Yates

WEST GARDINER BARRIER TOLL PLAZA ORT CONVERSION

GENERAL PLAN 3

SHEET NUMBER: GP-03

CONTRACT:2015.11

ITEM 526.361 MEDIAN BARRIER TRANSITION TYPE I	EA
STA. 5122+20.0, MEDIAN	1
STA. 120+00.0, LT.	1
ITEM 527.305 ENERGY ABSORBING SYSTEM (CAT) - REMOVE AND STACK	EA
STA. 5122+30, MEDIAN	1
ITEM 527.306 FasTRACC	EA
STA. 120+26.75, LT.	1

ITEM 606.1723 BRIDGE TRANSITION - TYPE III MODIFIED	EA
STA. 5122+38.15, MEDIAN	1
ITEM 606.278 TERMINAL END - ANCHORED END	EA
STA. 5124+80.6, LT.	1
ITEM 606.65 GUARDRAIL THRIE BEAM SINGLE RAIL	LF
STA. 5122+38.15, MEDIAN TO STA. 5125+13.15, MEDIAN	275
STA. 5122+38.15, MEDIAN TO STA. 5123+88.15, MEDIAN	150

ITEM 606.66 TERMINAL THRIE BEAM	EA
STA. 5125+50.00, MEDIAN	1
ITEM 606.701 ASYMMETRICAL THRIE BEAM TRANSITION	EA
STA. 5123+88.15, MEDIAN	1
ITEM 606.3631 GUARDRAIL REMOVE, STACK AND DISPOSE	LF
STA. 5122+38.15, MEDIAN TO STA. 5123+88.15, MEDIAN	150

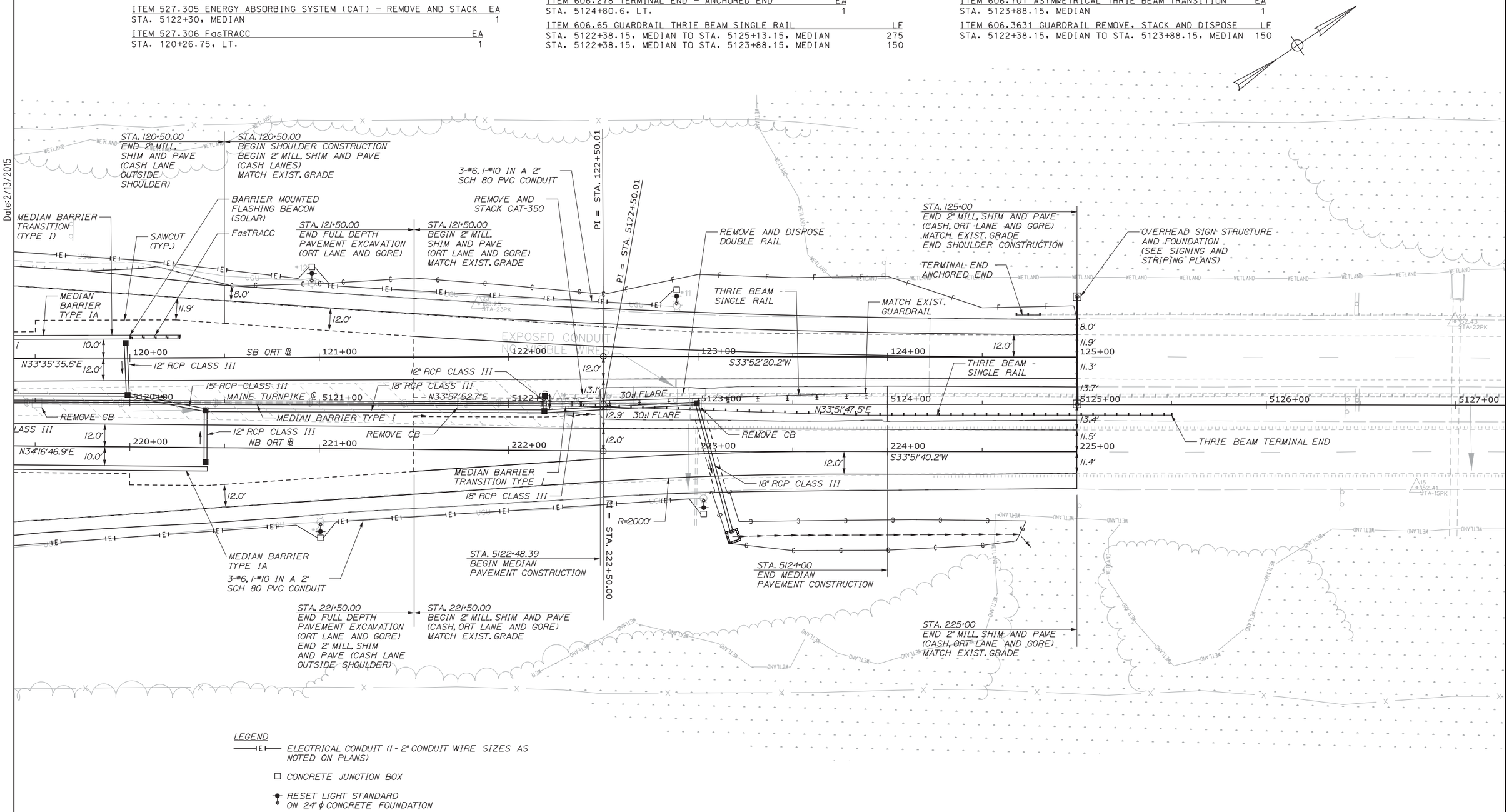

LEGEND

- ELECTRICAL CONDUIT (1 - 2" CONDUIT WIRE SIZES AS NOTED ON PLANS)
- CONCRETE JUNCTION BOX
- RESET LIGHT STANDARD ON 24" ϕ CONCRETE FOUNDATION

Date:2/13/2015

Filename: 029_HDPlan.dgn

Scale: 25 0 25 50
SCALE IN FEET

No.	Revision	By	Date

Designed by: HNTB

CONSULTANT PROJECT MANAGER: R. Bruce Munger, P.E.

	By	Date		By	Date
Designed	CJG	02/15	Checked	LZD	02/15
Drawn	MPC	02/15	In Charge of	RAL	02/15

HNTB CORPORATION
340 County Road, Suite 6-C
Westbrook, ME 04092
TEL (207) 774-5155
FAX (207) 228-0909

MAINE TURNPIKE

THE GOLD STAR MEMORIAL HIGHWAY

MTA PROJECT MANAGER: William Yates

WEST GARDINER BARRIER TOLL PLAZA ORT CONVERSION

GENERAL PLAN 4

SHEET NUMBER: GP-04

CONTRACT:2015.11

Date:2/13/2015

STA 5127+69 TO 5129+02
REMOVE RUMBLE STRIPS
MILL 1 1/2" AND PAVE 1 1/2" HMA 12.5mm

WETLAND

23
152.43
STA-22PK

RUMBLE STRIP

21
155.24
STA-21PK

5127+00 5128+00 5129+00 5130+00 5131+00 5132+00 5133+00 5134+00

N33°51'47.5"E

15
152.41
STA-15PK

16
152.73
STA-16PK

17
158.06
STA-17PK

WETLAND

LEGEND

E — ELECTRICAL CONDUIT (1-2" CONDUIT WIRE SIZES AS NOTED ON PLANS)

CONCRETE JUNCTION BOX

RESET LIGHT STANDARD ON 24" ϕ CONCRETE FOUNDATION

Filename: 030_HDPlan.dgn

Scale: 25 0 25 50
SCALE IN FEET

No.	Revision	By	Date

Designed by: HNTB

CONSULTANT PROJECT MANAGER: R. Bruce Munger, P.E.

	By	Date		By	Date
Designed	CJG	02/15	Checked	LZD	02/15
Drawn	MPC	02/15	In Charge of	RAL	02/15

HNTB CORPORATION
340 County Road, Suite 6-C
Westbrook, ME 04092
TEL (207) 774-5155
FAX (207) 228-0909

MAINE TURNPIKE

THE GOLD STAR MEMORIAL HIGHWAY

MTA PROJECT MANAGER: William Yates

WEST GARDINER BARRIER TOLL PLAZA ORT CONVERSION

GENERAL PLAN 5

CONTRACT:2015.11

Date:2/13/2015

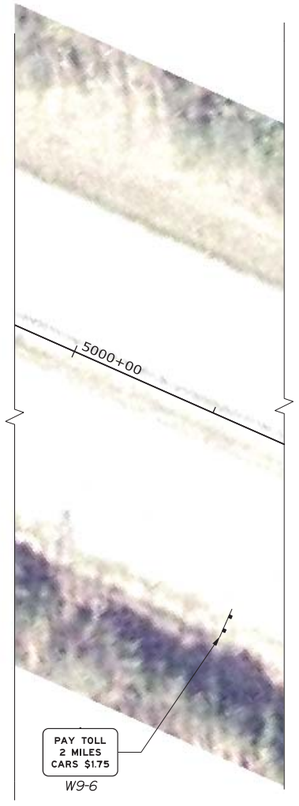

W9-6

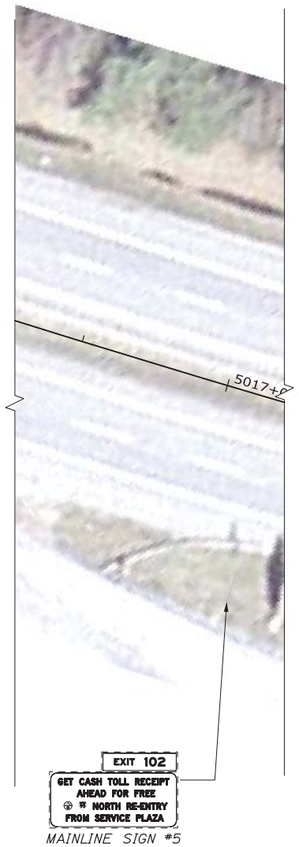

MAINLINE SIGN #5
RELOCATE TO NB ORT
STA 214+00

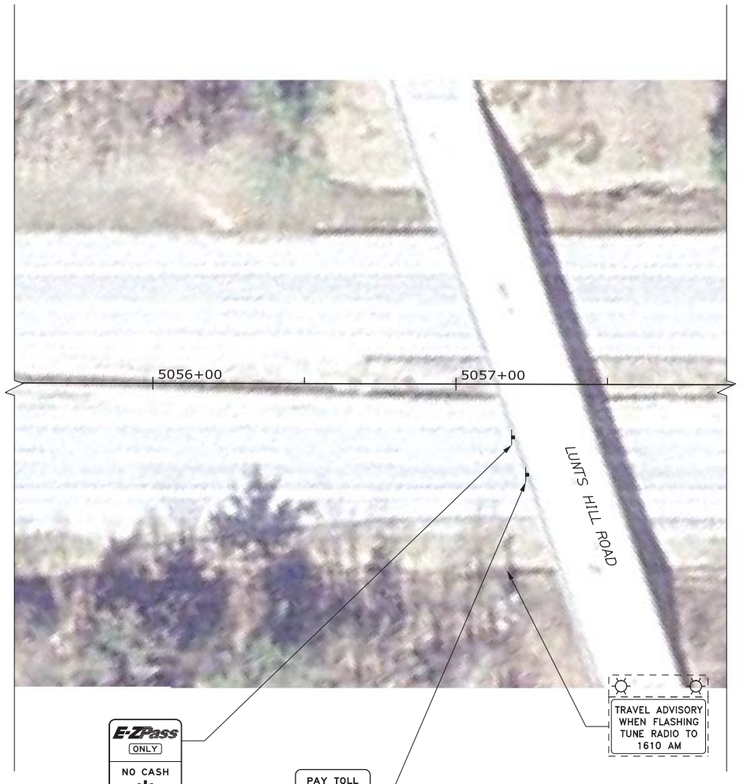

R3-16
(SEE NOTE 1)

SP-1
(SEE NOTE 1)

NOTES:

1. SIGN SUPPORTS ARE BEING INSTALLED ON LUNTS HILL ROAD BY THE 2015.10 CONTRACTOR FOR BOTH BRIDGE MOUNTED SIGNS. SEE APPENDIX G FOR SIGN SUPPORT DETAILS.

LEGEND

SWL	SOLID WHITE LINE		EXISTING SIGN
SYL	SOLID YELLOW LINE		PROPOSED/ RELOCATED SIGN
	PROPOSED/ RELOCATED SIGN		
	EXISTING SIGN		

Scale: 25 0 25 50
1" = 25'

No.	Revision	By	Date

Designed by: HNTB

CONSULTANT PROJECT MANAGER: R. Bruce Munger, P.E.

	By	Date		By	Date
Designed	WA	02/15	Checked	LZD	02/15
Drawn	WA	02/15	In Charge of	RAL	02/15

HNTB CORPORATION
340 County Road, Suite 6-C
Westbrook, ME 04092
TEL (207) 774-5155
FAX (207) 228-0909

MAINE TURNPIKE

THE GOLD STAR MEMORIAL HIGHWAY

MTA PROJECT MANAGER: William Yates

WEST GARDINER BARRIER TOLL PLAZA ORT CONVERSION

SIGNING AND STRIPING PLAN 1

SHEET NUMBER: SS-01

CONTRACT:2015.11

Filename: 031_ssplan01.dgn

Date:2/13/2015

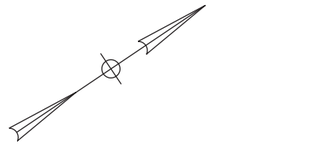

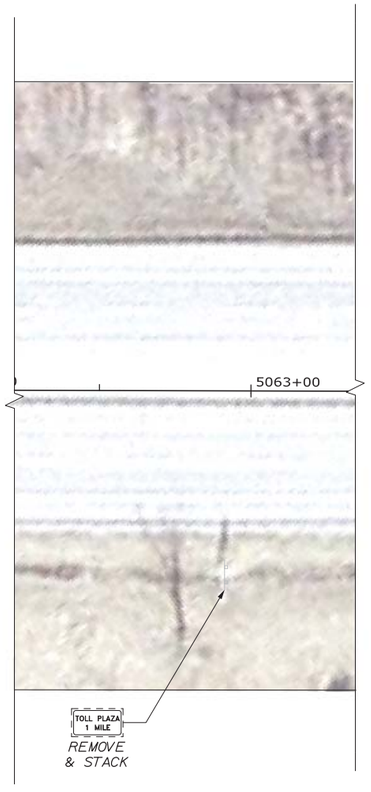

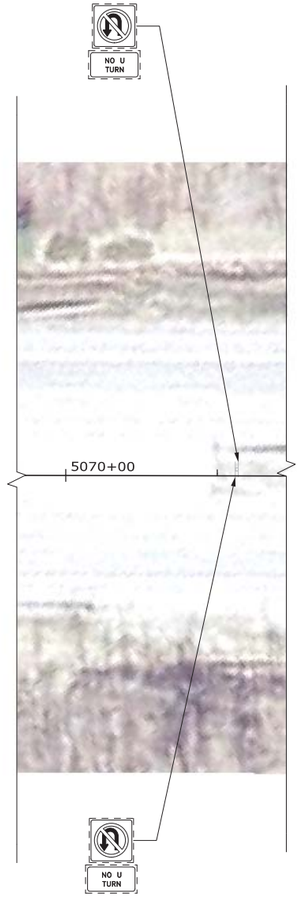

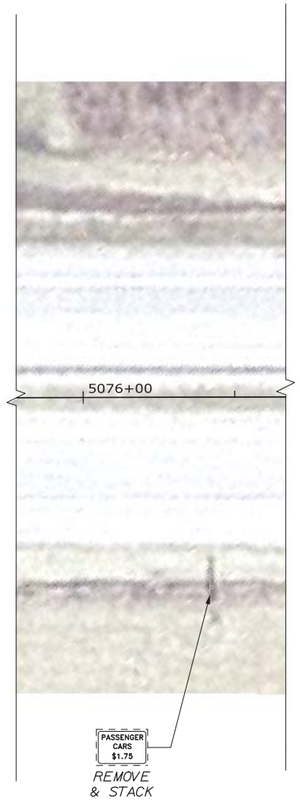

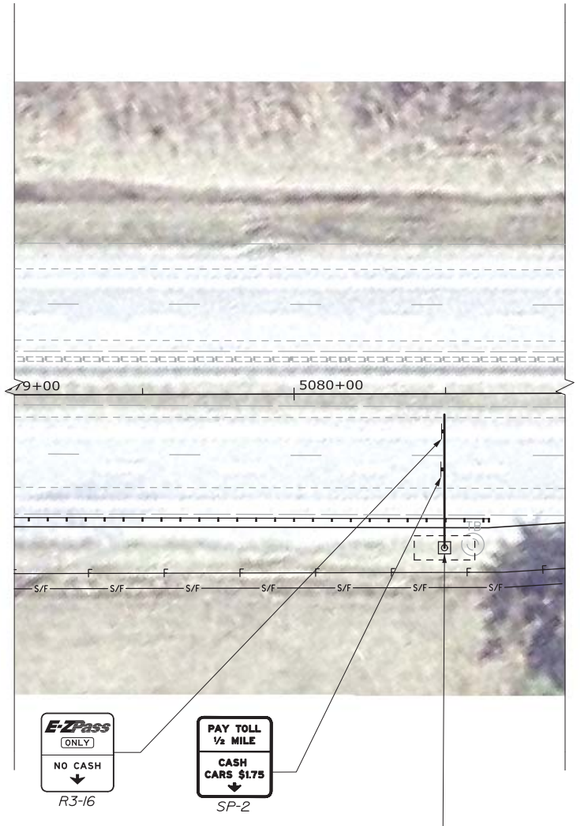

LEGEND

SWL	SOLID WHITE LINE		EXISTING SIGN
SYL	SOLID YELLOW LINE		
	PROPOSED/ RELOCATED SIGN		PROPOSED/ RELOCATED SIGN
	EXISTING SIGN		

Scale: 25 0 25 50
1" = 25'

No.	Revision	By	Date

Designed by: HNTB

CONSULTANT PROJECT MANAGER: R. Bruce Munger, P.E.

	By	Date		By	Date
Designed	WA	02/15	Checked	LZD	02/15
Drawn	WA	02/15	In Charge of	RAL	02/15

HNTB CORPORATION
340 County Road, Suite 6-C
Westbrook, ME 04092
TEL (207) 774-5155
FAX (207) 228-0909

MAINE TURNPIKE

THE GOLD STAR MEMORIAL HIGHWAY

MTA PROJECT MANAGER: William Yates

WEST GARDINER BARRIER TOLL PLAZA ORT CONVERSION

SIGNING AND STRIPING PLAN 2

SHEET NUMBER: SS-02

CONTRACT:2015.11

Filename: 032_ssplan02.dgn

Date:2/13/2015

5089+00 5090+00 5091+00 5092+00 5093+00 5094+00 5095+00 5096+00

NORTHBOUND

EXPOSED LEDGE

S/F S/F S/F S/F S/F S/F S/F S/F S/F S/F

TOLL PLAZA 1/2 MILE
REMOVE & STACK

REDUCED SPEED AHEAD
REMOVE & STACK

LEGEND

SWL	SOLID WHITE LINE		EXISTING SIGN
SYL	SOLID YELLOW LINE		
	PROPOSED/ RELOCATED SIGN		PROPOSED/ RELOCATED SIGN
	EXISTING SIGN		

Scale: 25 0 25 50
1" = 25'

No.	Revision	By	Date

Designed by: HNTB

CONSULTANT PROJECT MANAGER: R. Bruce Munger, P.E.

	By	Date		By	Date
Designed	WA	02/15	Checked	LZD	02/15
Drawn	WA	02/15	In Charge of	RAL	02/15

HNTB CORPORATION
340 County Road, Suite 6-C
Westbrook, ME 04092
TEL (207) 774-5155
FAX (207) 228-0909

MAINE TURNPIKE

THE GOLD STAR MEMORIAL HIGHWAY

MTA PROJECT MANAGER: William Yates

WEST GARDINER BARRIER TOLL PLAZA ORT CONVERSION

SIGNING AND STRIPING PLAN 3

SHEET NUMBER: SS-03

CONTRACT:2015.11

Filename: 033_ssplan03.dgn

Date:2/13/2015

SPEED LIMIT 70

MAINLINE SIGN #6 SIGN PANEL
RELOCATED FROM STA 5107+00 SB

SOUTHBOUND

5097+00 5098+00 5099+00 5100+00 5101+00 5102+00 5103+00

N33°52'54.3"E

EXPOSED LEDGE

S/F

RUMBLE STRIP AHEAD

REMOVE & STACK

STOP PAY TOLL AHEAD
CARS $1.75

REMOVE & STACK

WIDE LOADS KEEP TO FAR RIGHT

PAY TOLL ¼ MILE
E-ZPass ONLY
CASH
NO CASH

SP-5a

INSTALL OVERHEAD SIGN STRUCTURE MAINE TURNPIKE STA. 5097+75
SEE SHEET OH-01 FOR GUARDRAIL NOTES

LEGEND

SWL	SOLID WHITE LINE		EXISTING SIGN
SYL	SOLID YELLOW LINE		PROPOSED/ RELOCATED SIGN
	PROPOSED/ RELOCATED SIGN		
	EXISTING SIGN		

Scale: 25 0 25 50
1" = 25'

No.	Revision	By	Date

Designed by: HNTB

CONSULTANT PROJECT MANAGER: R. Bruce Munger, P.E.

	By	Date		By	Date
Designed	WA	02/15	Checked	LZD	02/15
Drawn	WA	02/15	In Charge of	RAL	02/15

HNTB CORPORATION
340 County Road, Suite 6-C
Westbrook, ME 04092
TEL (207) 774-5155
FAX (207) 228-0909

MAINE TURNPIKE

THE GOLD STAR MEMORIAL HIGHWAY

MTA PROJECT MANAGER: William Yates

WEST GARDINER BARRIER TOLL PLAZA ORT CONVERSION

SIGNING AND STRIPING PLAN 4

SHEET NUMBER: SS-04

CONTRACT:2015.11

Filename: 034_ssplan04.dgn

Date:2/13/2015

NEED TO PAY A TOLL? CALL 1-888-MTA-PASS
SP-3

WRONG WAY
REMOVE & STACK

MILE 100
MILE MARKER

SPEED LIMIT 70
REMOVE & STACK

STA 107+00
MATCH EXISTING STRIPING

SPEED LIMIT 70

MAINLINE SIGN #6 RELOCATE SIGN PANEL TO A 6" X 6" WOOD POST @ STA 5098+00 LT DURING CONSTRUCTION. RESET SIGN PANEL BACK TO EXISTING POST @ EXISTING LOCATION UPON CONSTRUCTION COMPLETION. WOOD POST SHALL BE INCLUDED IN RESET ITEM.

Save time...save money
E-ZPass
1-888-MTA-PASS
SP-8

NEED TO PAY A TOLL? CALL 1-888-MTA-PASS
REMOVE & STACK

DO NOT ENTER
REMOVE & STACK

REMOVE & STACK

W4-3

END TOLL PLAZA SPEED

6" SWL
12" SWL
6" SYL
N33°52'6.3"E
SB ORT ℄
N33°52'54.3"E
NB ORT ℄
N33°55'20.8"E
35' (TYP.)

5104+00 5105+00 5106+00 5107+00 5108+00 5109+00 5110+00 5111+00
107+00 108+00 109+00 110+00 111+00
207+00 208+00 209+00 210+00 211+00

WIDE LOADS KEEP TO FAR RIGHT

SPEED LIMIT 35
MAINLINE SIGN #4 RELOCATE TO SB ORT STA 119+50

SPEED LIMIT 35
MAINLINE SIGN #3 RELOCATE TO NB ORT STA 212+50

MILE 100
MILE MARKER

E-ZPASS ACCEPTED ALL LANES
MAINLINE SIGN #1 RELOCATE TO NB ORT STA 210+50

E-ZPass ONLY NO CASH
R3-16

STOP AHEAD PAY TOLL
CASH CARS $1.75
SP-4

INSTALL OVERHEAD SIGN STRUCTURE MAINE TURNPIKE STA. 5107+00 SEE SHEET OH-01 FOR GUARDRAIL NOTES

STA 207+00
MATCH EXISTING STRIPING

W13-1P 35 MPH
M6-2

DO NOT ENTER
REMOVE & STACK

SPEED LIMIT AT TOLL PLAZA 10 MPH
REMOVE & STACK

REDUCED SPEED AHEAD
REMOVE & STACK

REMOVE & STACK

E-ZPASS ACCEPTED ALL LANES
MAINLINE SIGN #1 RELOCATED FROM NB STA 5106+57

RIP RAP

STOP AHEAD PAY TOLL CARS $1.75
W9-6a

LEGEND

SWL	SOLID WHITE LINE		EXISTING SIGN
SYL	SOLID YELLOW LINE		PROPOSED/ RELOCATED SIGN
	PROPOSED/ RELOCATED SIGN		EXISTING SIGN

Scale: 25 0 25 50
1" = 25'

No.	Revision	By	Date

Designed by: HNTB

CONSULTANT PROJECT MANAGER: R. Bruce Munger, P.E.

	By	Date		By	Date
Designed	WA	02/15	Checked	LZD	02/15
Drawn	WA	02/15	In Charge of	RAL	02/15

HNTB CORPORATION
340 County Road, Suite 6-C
Westbrook, ME 04092
TEL (207) 774-5155
FAX (207) 228-0909

MAINE TURNPIKE

THE GOLD STAR MEMORIAL HIGHWAY

MTA PROJECT MANAGER: William Yates

WEST GARDINER BARRIER TOLL PLAZA ORT CONVERSION

SIGNING AND STRIPING PLAN 5

SHEET NUMBER: SS-05

CONTRACT:2015.11

Filename: 035_ssplan05.dgn

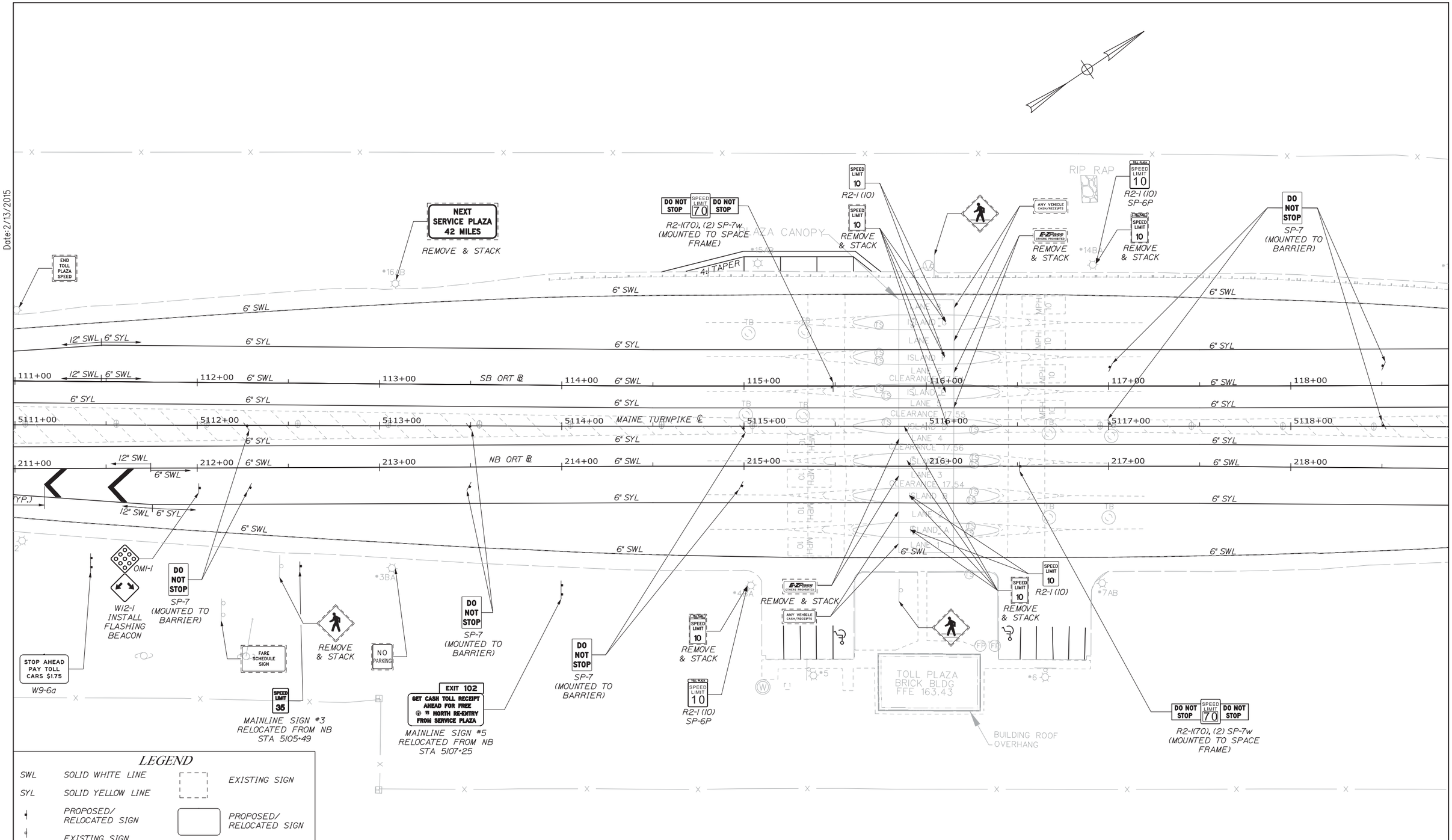

Date:2/13/2015

Filename: 036_ssplan06.dgn

Scale: 25 0 25 50
1" = 25'

No.	Revision	By	Date

Designed by:

HNTB

CONSULTANT PROJECT MANAGER: R. Bruce Munger, P.E.

	By	Date		By	Date
Designed	WA	02/15	Checked	LZD	02/15
Drawn	WA	02/15	In Charge of	RAL	02/15

HNTB CORPORATION
340 County Road, Suite 6-C
Westbrook, ME 04092
TEL (207) 774-5155
FAX (207) 228-0909

MAINE TURNPIKE

THE GOLD STAR MEMORIAL HIGHWAY

MTA PROJECT MANAGER: William Yates

WEST GARDINER BARRIER TOLL PLAZA ORT CONVERSION

SIGNING AND STRIPING PLAN 6

SHEET NUMBER: SS-06

CONTRACT:2015.11

Date:2/13/2015

MAINLINE SIGN #4 RELOCATED FROM STA 5105+49 NB MEDIAN

SPEED LIMIT 35

REMOVE AND STACK

FARE SCHEDULE SIGN

NO PARKING

*13B

SP-7 (MOUNTED TO BARRIER)

DO NOT STOP

OMI-1

W12-1 INSTALL FLASHING BEACON

STOP AHEAD PAY TOLL CARS $1.75

W9-6a

NO PARKING

*12

MAINLINE SIGN #2 RELOCATED FROM SB ORT STA 5137+62

E-ZPASS ACCEPTED ALL LANES

DO NOT ENTER

REMOVE & STACK

REMOVE & STACK

*11

REDUCED SPEED AHEAD

REMOVE & STACK

35 MPH

W13-1P M6-2

REMOVE & STACK

SPEED LIMIT AT TOLL PLAZA 10 MPH

INSTALL OVERHEAD SIGN STRUCTURE MAINE TURNPIKE STA. 5125+00 SEE SHEET OH-02 FOR GUARDRAIL NOTES

STA 125+00 MATCH EXISTING STRIPING

STOP AHEAD PAY TOLL CASH CARS $1.75

SP-4

E-ZPass ONLY NO CASH

R3-16

6"SWL

6"SYL

6" SYL 12" SWL

35' (TYP.)

6" SWL

12" SWL

119+00 120+00 121+00 122+00 123+00 124+00 125+00

6"SWL N33°35'35.6"E

6" SWL 12" SWL

S33°52'20.2"W

SB ORT ℄

SOUTHBOUND

6"SYL

6" SYL

5119+00 5120+00 5121+00 5122+00 5123+00 5124+00 5125+00 5126+00

2.7'E

N33°57'52.7"E

N33°54'00.0"E

MAINE TURNPIKE ℄

6" SYL

6" SYL

NB ORT ℄

219+00 220+00 221+00 222+00 223+00 224+00 225+00

6" SWL N34°16'46.9"E

6" SWL 12" SWL

12" SWL

S33°51'40.2"W

NORTHBOUND

6" SYL

6" SYL 12" SWL

6" SWL

6" SWL

*8B

END TOLL PLAZA SPEED

REMOVE & STACK

END TOLL PLAZA SPEED

SP-6

NEXT SERVICE PLAZA 2 MILES

REMOVE & STACK

*9

W4-3

REMOVE & STACK

DO NOT ENTER

REMOVE & STACK

Save time_save money E-ZPass 1-888-MTA-PASS

REMOVE & STACK

Save time_save money E-ZPass 1-888-MTA-PASS

SP-8

STA 225+00 MATCH EXISTING STRIPING

SPEED LIMIT 70

REMOVE & STACK

SPEED LIMIT 70

MAINLINE SIGN #7 RELOCATE SIGN PANEL TO A 6" X 6" WOOD POST @ STA 5134+00 RT DURING CONSTRUCTION. RESET SIGN PANEL BACK TO EXISTING POST @ EXISTING LOCATION UPON CONSTRUCTION COMPLETION. WOOD POST SHALL BE INCLUDED IN RESET ITEM.

LEGEND

SWL	SOLID WHITE LINE		EXISTING SIGN
SYL	SOLID YELLOW LINE		PROPOSED/ RELOCATED SIGN
	PROPOSED/ RELOCATE SIGN		
	EXISTING SIGN		

Scale: 25 0 25 50

1" = 25'

No.	Revision	By	Date

Designed by: HNTB

CONSULTANT PROJECT MANAGER: R. Bruce Munger, P.E.

	By	Date		By	Date
Designed	WA	02/15	Checked	LZD	02/15
Drawn	WA	02/15	In Charge of	RAL	02/15

HNTB CORPORATION
340 County Road, Suite 6-C
Westbrook, ME 04092
TEL (207) 774-5155
FAX (207) 228-0909

MAINE TURNPIKE

THE GOLD STAR MEMORIAL HIGHWAY

MTA PROJECT MANAGER: William Yates

WEST GARDINER BARRIER TOLL PLAZA ORT CONVERSION

SIGNING AND STRIPING PLAN 7

SHEET NUMBER: SS-07

CONTRACT:2015.11

Filename: 037_ssplan07.dgn

Date:2/13/2015

Date:2/13/2015

SPEED LIMIT 35

REMOVE & STACK

STOP PAY TOLL AHEAD CARS $1.75

REMOVE & STACK

5126+00 5127+00 5128+00 5129+00 5130+00 5131+00 5132+00 5133+00

N33°51'47.5"E

WRONG WAY

REMOVE & STACK

NEED TO PAY A TOLL? CALL 1-888-MTA-PASS

SP-3

EXIT 102

WEST GARDINER SERVICE PLAZA

1 1/4 MILES

LEGEND

SWL	SOLID WHITE LINE		EXISTING SIGN
SYL	SOLID YELLOW LINE		
	PROPOSED/ RELOCATED SIGN		PROPOSED/ RELOCATED SIGN
	EXISTING SIGN		

Filename: 038_ssplan08.dgn

Scale: 25 0 25 50

1" = 25'

No.	Revision	By	Date

Designed by: HNTB

CONSULTANT PROJECT MANAGER: R. Bruce Munger, P.E.

	By	Date		By	Date
Designed	WA	02/15	Checked	LZD	02/15
Drawn	WA	02/15	In Charge of	RAL	02/15

HNTB CORPORATION
340 County Road, Suite 6-C
Westbrook, ME 04092
TEL (207) 774-5155
FAX (207) 228-0909

MAINE TURNPIKE

THE GOLD STAR MEMORIAL HIGHWAY

MTA PROJECT MANAGER: William Yates

WEST GARDINER BARRIER TOLL PLAZA ORT CONVERSION

SIGNING AND STRIPING PLAN 8

SHEET NUMBER: SS-08

CONTRACT:2015.11

Date:2/13/2015

RUMBLE STRIP AHEAD

REMOVE & STACK

WIDE LOADS KEEP TO FAR RIGHT

SP-9 (INSTALL ON EXISTING POSTS)

WIDE LOADS KEEP TO FAR RIGHT

REMOVE & STACK

REMOVE & STACK

REDUCED SPEED AHEAD

MAINLINE SIGN #2
RELOCATE TO SB ORT
STA 121+50

E-ZPASS ACCEPTED ALL LANES

INSTALL OVERHEAD SIGN STRUCTURE MAINE TURNPIKE STA. 5139+00
SEE SHEET OH-02 FOR GUARDRAIL NOTES

PAY TOLL ¼ MILE
E-ZPass ONLY
CASH
NO CASH

SP-5a

S/F

SOUTHBOUND

NORTHBOUND

5134+00 5135+00 5136+00 5137+00 5138+00 5139+00 5140+00

SPEED LIMIT 70

MAINLINE SIGN #7
SIGN PANEL
RELOCATED FROM
STA. 5125+00 NB

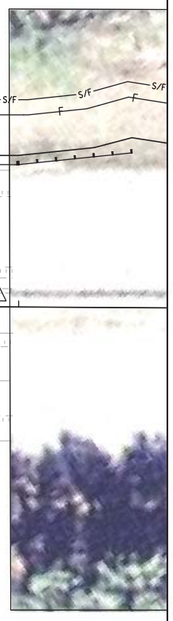

LEGEND

SWL	SOLID WHITE LINE		EXISTING SIGN
SYL	SOLID YELLOW LINE		PROPOSED/ RELOCATED SIGN
	PROPOSED/ RELOCATED SIGN		
	EXISTING SIGN		

Scale: 25 0 25 50
1" = 25'

No.	Revision	By	Date

Designed by: HNTB

CONSULTANT PROJECT MANAGER: R. Bruce Munger, P.E.

	By	Date		By	Date
Designed	WA	02/15	Checked	LZD	02/15
Drawn	WA	02/15	In Charge of	RAL	02/15

HNTB CORPORATION
340 County Road, Suite 6-C
Westbrook, ME 04092
TEL (207) 774-5155
FAX (207) 228-0909

MAINE TURNPIKE

THE GOLD STAR MEMORIAL HIGHWAY

MTA PROJECT MANAGER: William Yates

WEST GARDINER BARRIER TOLL PLAZA ORT CONVERSION

SIGNING AND STRIPING PLAN 9

SHEET NUMBER: SS-09

CONTRACT:2015.11

Filename: 039_ssplan09.dgn

Date:2/13/2015

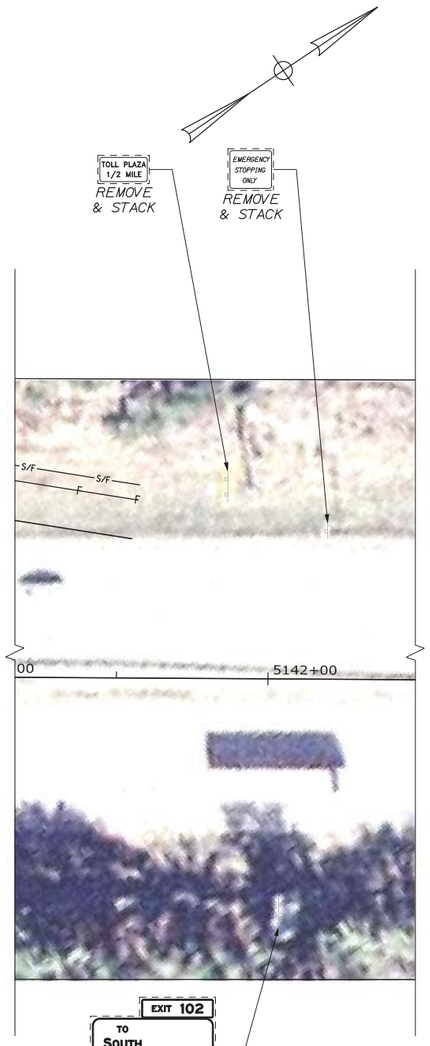

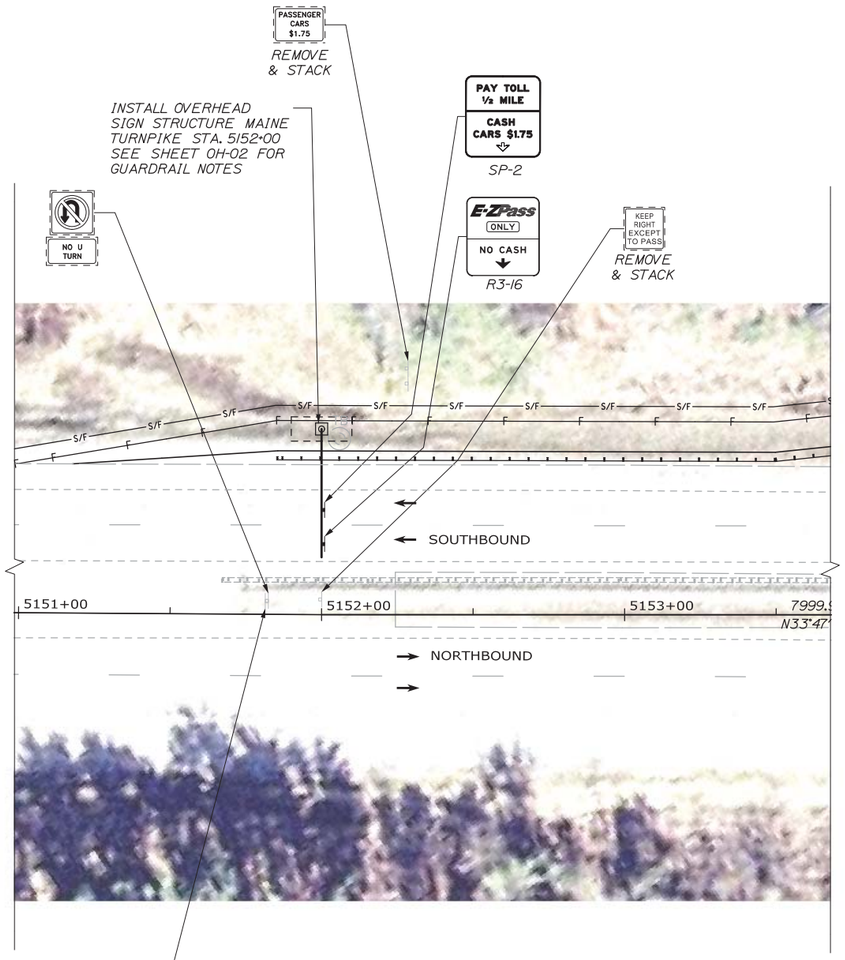

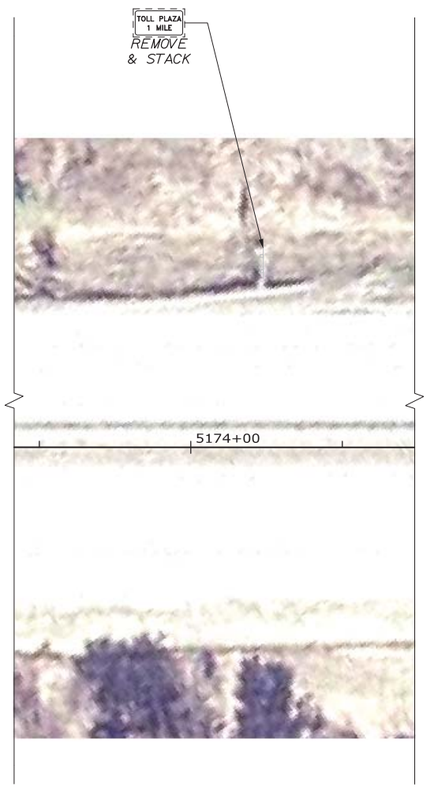

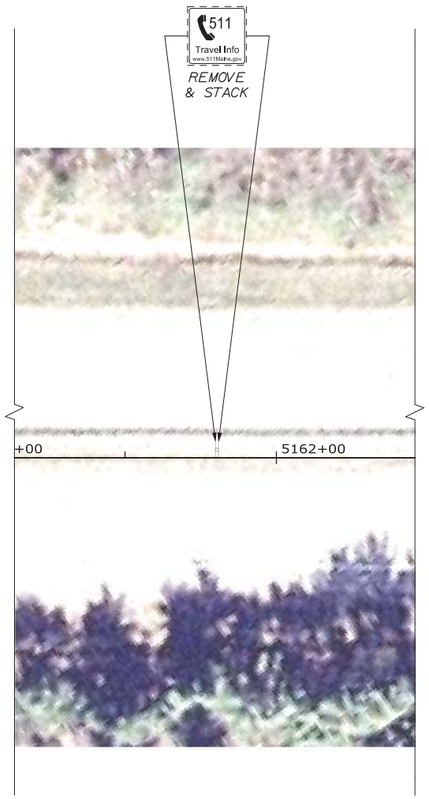

LEGEND

SWL	SOLID WHITE LINE		EXISTING SIGN
SYL	SOLID YELLOW LINE		PROPOSED/ RELOCATED SIGN
	PROPOSED/ RELOCATED SIGN		
	EXISTING SIGN		

Scale: 25 0 25 50
1" = 25'

No.	Revision	By	Date

Designed by: HNTB

CONSULTANT PROJECT MANAGER: R. Bruce Munger, P.E.

	By	Date		By	Date
Designed	WA	02/15	Checked	LZD	02/15
Drawn	WA	02/15	In Charge of	RAL	02/15

HNTB CORPORATION
340 County Road, Suite 6-C
Westbrook, ME 04092
TEL (207) 774-5155
FAX (207) 228-0909

MAINE TURNPIKE

THE GOLD STAR MEMORIAL HIGHWAY

MTA PROJECT MANAGER: William Yates

WEST GARDINER BARRIER TOLL PLAZA ORT CONVERSION

SIGNING AND STRIPING PLAN 10

SHEET NUMBER: SS-10

CONTRACT:2015.11

40 OF 118

Filename: 040_ssplan10.dgn

Date:2/13/2015

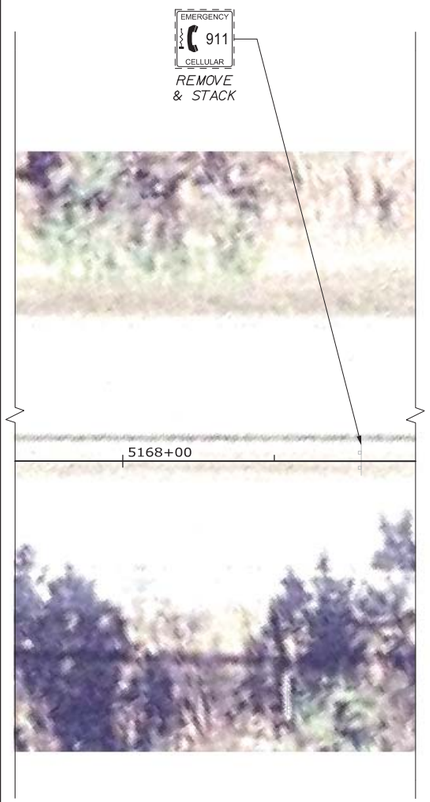

REMOVE & STACK

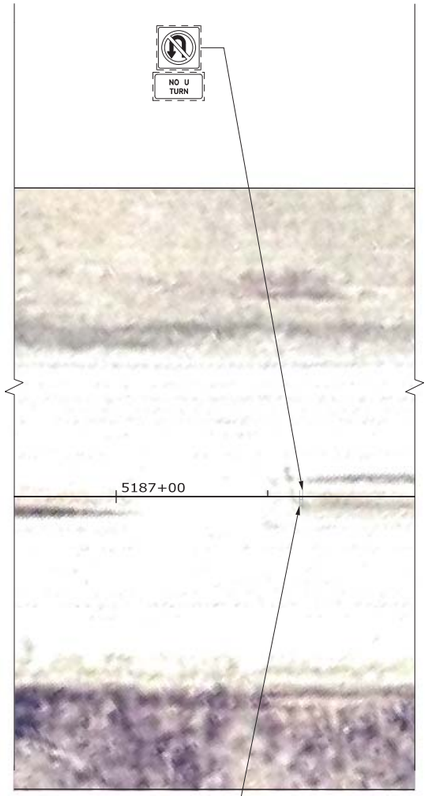

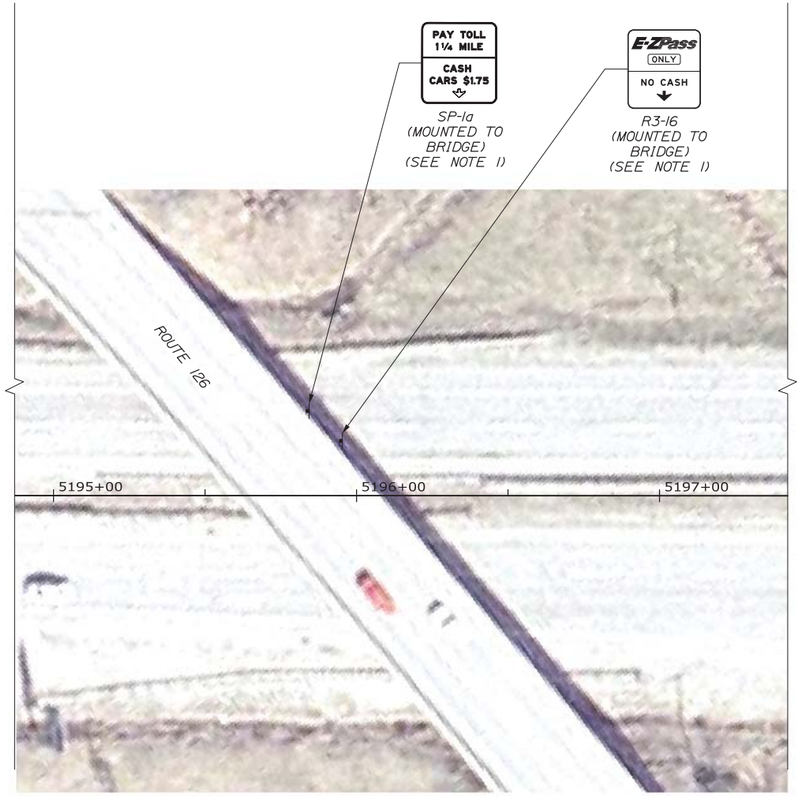

SP-1a (MOUNTED TO BRIDGE) (SEE NOTE 1)

R3-16 (MOUNTED TO BRIDGE) (SEE NOTE 1)

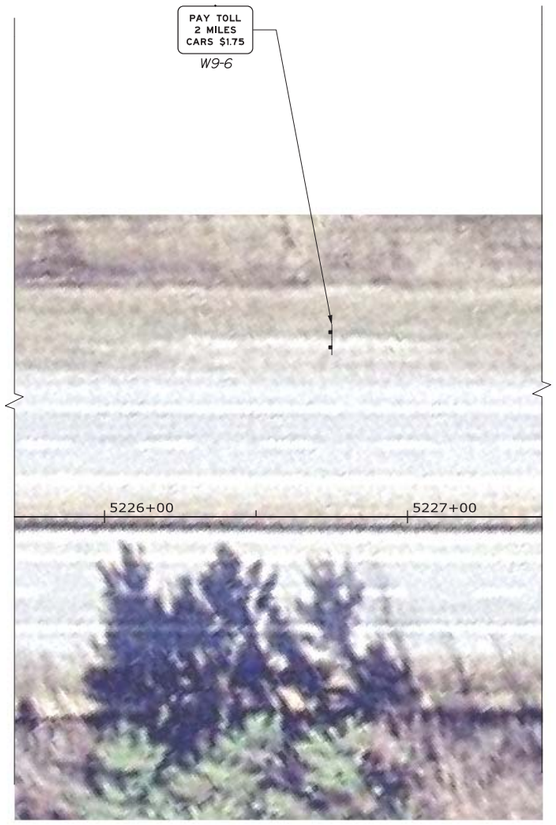

W9-6

LEGEND

SWL	SOLID WHITE LINE		EXISTING SIGN
SYL	SOLID YELLOW LINE		PROPOSED/ RELOCATED SIGN
	PROPOSED/ RELOCATED SIGN		
	EXISTING SIGN		

NOTE:
1. SEE SHEET S-22 FOR BRIDGE MOUNTED SIGN SUPPORTS

Scale: 25 0 25 50
1" = 25'

No.	Revision	By	Date

Designed by: HNTB

CONSULTANT PROJECT MANAGER: R. Bruce Munger, P.E.

	By	Date		By	Date
Designed	WA	02/15	Checked	LZD	02/15
Drawn	WA	02/15	In Charge of	RAL	02/15

HNTB CORPORATION
340 County Road, Suite 6-C
Westbrook, ME 04092
TEL (207) 774-5155
FAX (207) 228-0909

MAINE TURNPIKE

THE GOLD STAR MEMORIAL HIGHWAY

MTA PROJECT MANAGER: William Yates

WEST GARDINER BARRIER TOLL PLAZA ORT CONVERSION

SIGNING AND STRIPING PLAN 11

SHEET NUMBER: SS-11

CONTRACT:2015.11

Filename: 041_ssplan11.dgn

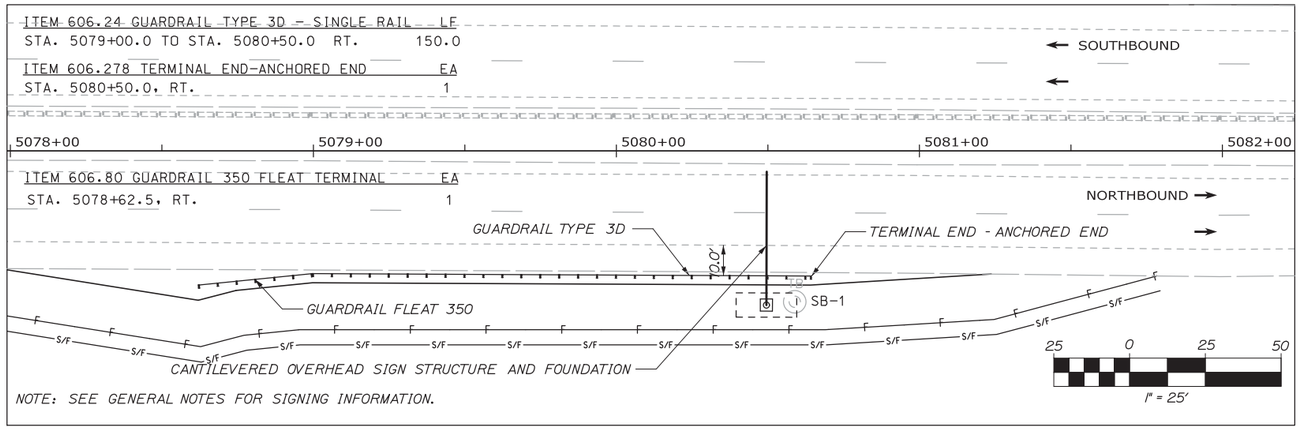

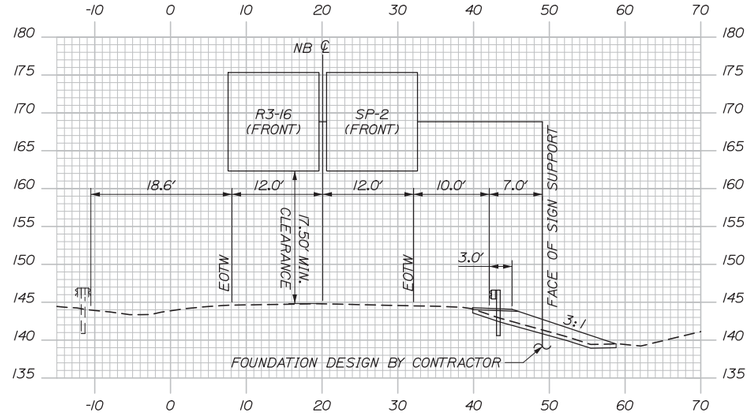

5080+50

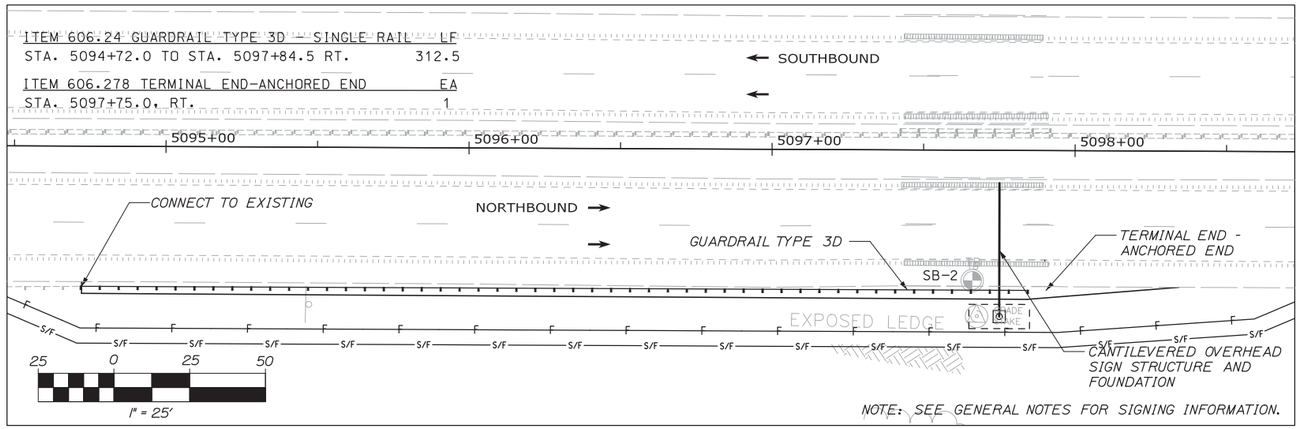

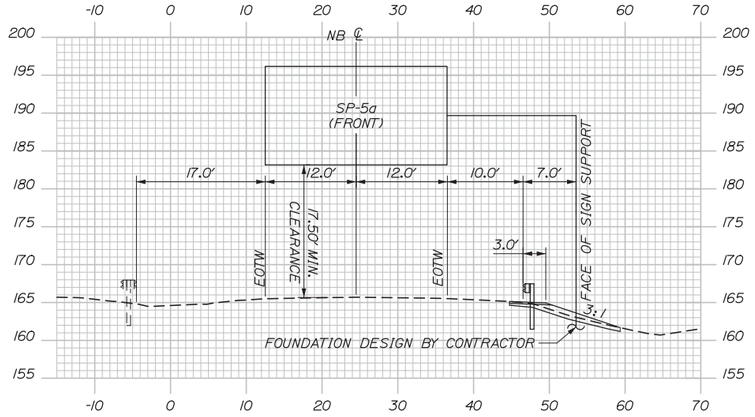

5097+75.00

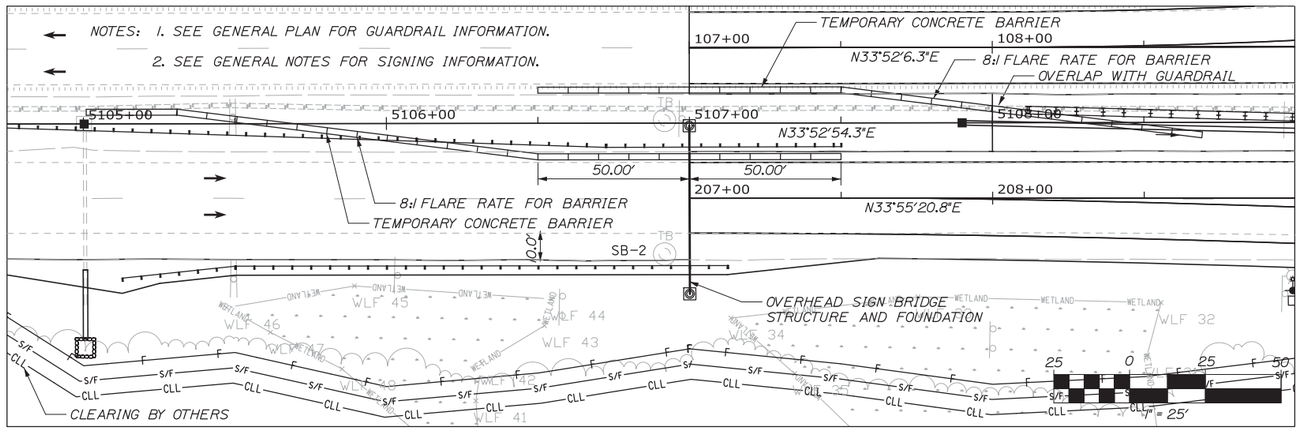

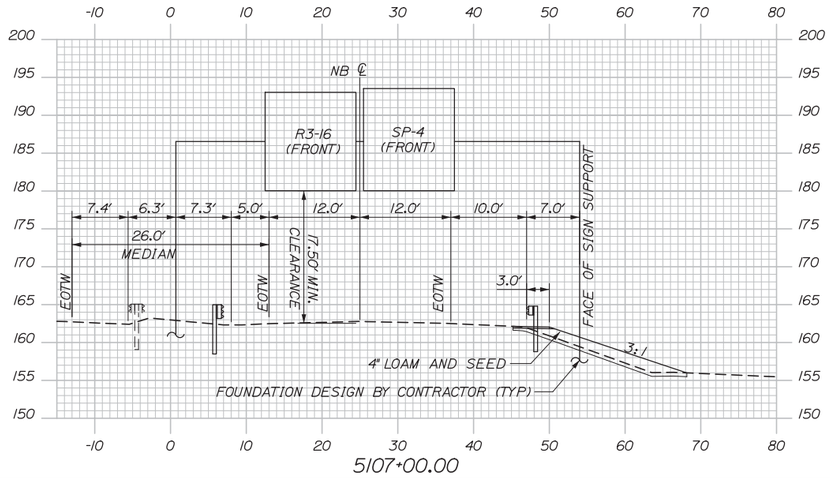

5107+00.00

Date:2/13/2015

Filename: 042_OverheadSign01.dgn

Scale:				Designed by: HNTB					
No.	Revision	By	Date	CONSULTANT PROJECT MANAGER: R. Bruce Munger, P.E.					
					By	Date		By	Date
				Designed	WA	02/15	Checked	LZD	02/15
				Drawn	WA	02/15	In Charge of	RAL	02/15

HNTB CORPORATION
340 County Road, Suite 6-C
Westbrook, ME 04092
TEL (207) 774-5155
FAX (207) 228-0909

MAINE TURNPIKE

THE GOLD STAR MEMORIAL HIGHWAY

MTA PROJECT MANAGER: William Yates

WEST GARDINER BARRIER TOLL PLAZA ORT CONVERSION

NORTHBOUND OVERHEAD SIGNS

SHEET NUMBER: OH-01

CONTRACT:2015.11

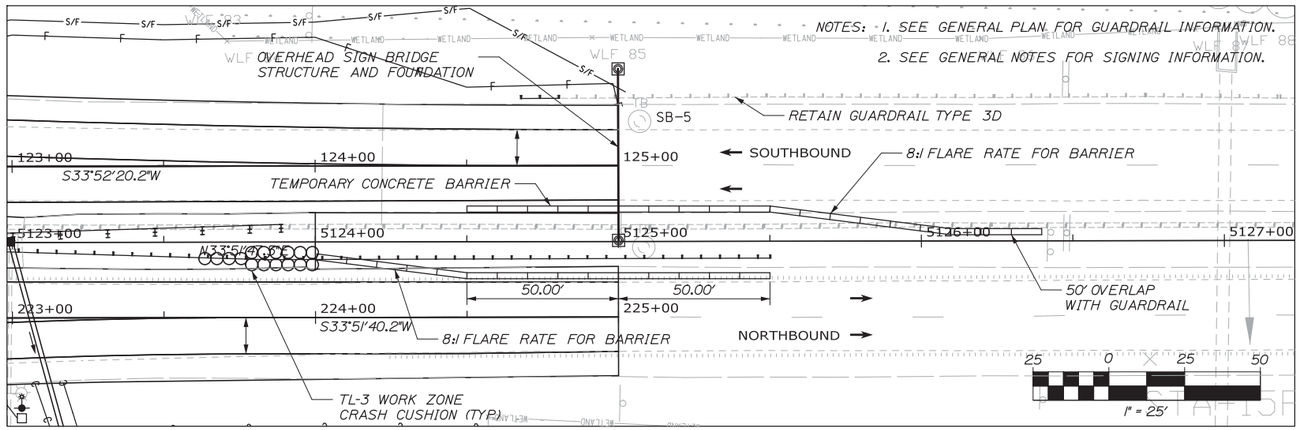

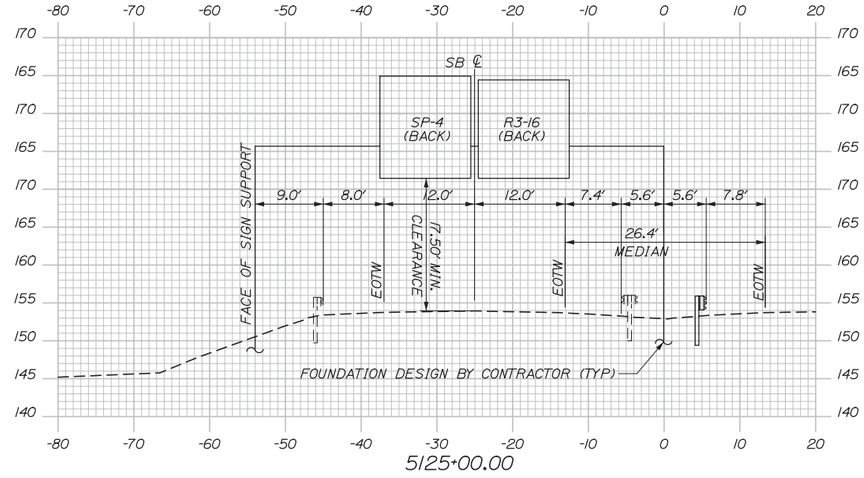

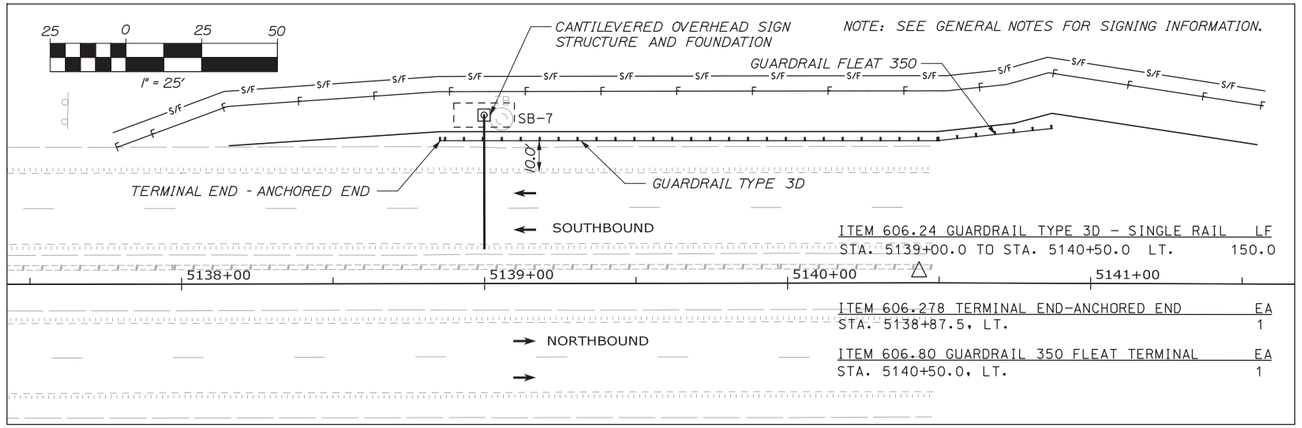

ITEM 606.24 GUARDRAIL TYPE 3D – SINGLE RAIL LF
STA. 5139+00.0 TO STA. 5140+50.0 LT. 150.0

ITEM 606.278 TERMINAL END-ANCHORED END EA
STA. 5138+87.5, LT. 1

ITEM 606.80 GUARDRAIL 350 FLEAT TERMINAL EA
STA. 5140+50.0, LT. 1

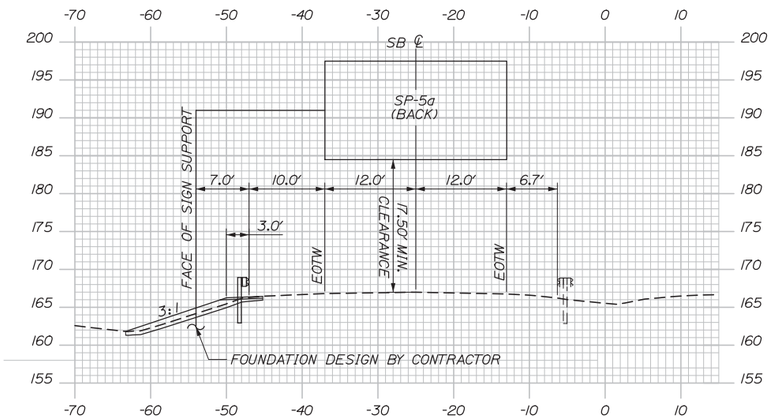

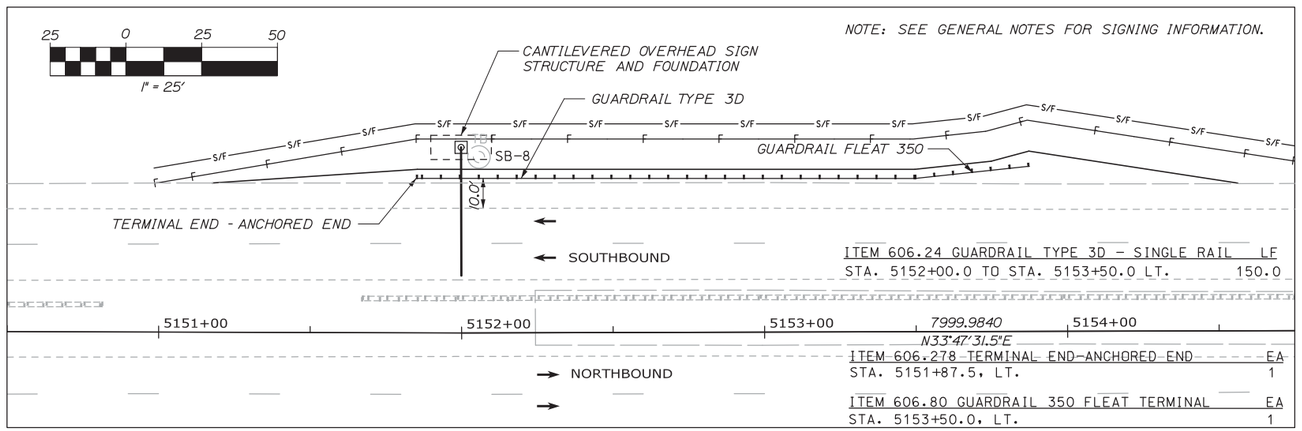

ITEM 606.24 GUARDRAIL TYPE 3D – SINGLE RAIL LF
STA. 5152+00.0 TO STA. 5153+50.0 LT. 150.0

ITEM 606.278 TERMINAL END-ANCHORED END EA
STA. 5151+87.5, LT. 1

ITEM 606.80 GUARDRAIL 350 FLEAT TERMINAL EA
STA. 5153+50.0, LT. 1

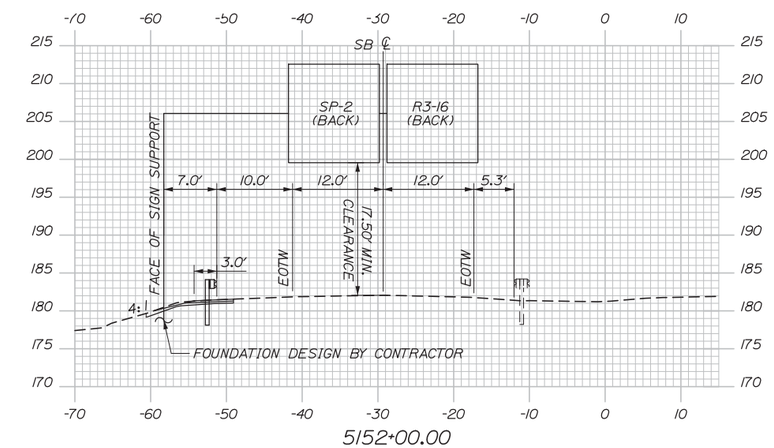

Date:2/13/2015

Filename: 043_OverheadSign02.dgn

Scale:

No.	Revision	By	Date

Designed by: HNTB

CONSULTANT PROJECT MANAGER: R. Bruce Munger, P.E.

	By	Date		By	Date
Designed	WA	02/15	Checked	LZD	02/15
Drawn	WA	02/15	In Charge of	RAL	02/15

HNTB CORPORATION
340 County Road, Suite 6-C
Westbrook, ME 04092
TEL (207) 774-5155
FAX (207) 228-0909

MAINE TURNPIKE

THE GOLD STAR MEMORIAL HIGHWAY

MTA PROJECT MANAGER: William Yates

WEST GARDINER BARRIER TOLL PLAZA ORT CONVERSION

SOUTHBOUND OVERHEAD SIGNS

SHEET NUMBER: OH-02

CONTRACT:2015.11

SIGN SUMMARY - POST MOUNTED

DESCRIPTION	QUANTITY	SIGN SIZE			COLOR		DIRECTION (NB=NORTHBOUND) (SB=SOUTHBOUND)	LOCATIONS
		HEIGHT (IN)	WIDTH (IN)	AREA (SQ. FT.)	BACK-GROUND	LEGEND		
TOLL PLAZA 1 MILE	2	72	198	99.00	YELLOW	BLACK	NB SB	5062+91 RT 5174+24 LT
TOLL PLAZA 1/2 MILE	2	84	198	115.50	YELLOW	BLACK	NB SB	5089+53 RT 5141+86 LT
RUMBLE STRIP AHEAD	4	48	48	16.00	YELLOW	BLACK	NB NB SB SB	5098+75 LT 5098+75 RT 5133+97 LT 5134+01 LT
REDUCED SPEED AHEAD	8	60	48	20.00	WHITE	BLACK	NB NB NB NB SB SB SB SB	5095+02 RT 5095+46 RT 208+95 RT 208+96 LT 122+89 LT* 122+88 RT 5136+39 LT 5136+49 LT
STOP PAY TOLL AHEAD	2	90	144	90.00	YELLOW	BLACK	NB SB	5100+47 RT 5131+86 LT
CARS $1.75	2	12	144	12.00	YELLOW	BLACK	NB SB	5100+47 RT 5131+86 LT
	2	36	36	9.00	WHITE	RED/ BLACK	NB SB	209+45 LT 122+53 RT
PASSENGER CARS $1.75	2	42	108	90.00	YELLOW	BLACK	NB SB	5076+42 RT 5152+29 LT
	2	48	36	12.00	WHITE	BLACK	NB SB	222+52 LT 109+45 RT
NEXT SERVICE PLAZA 2 MILES	1	66	96	44.00	BLUE	WHITE	NB	221+00 RT
NEXT SERVICE PLAZA 42 MILES	1	66	96	44.00	BLUE	WHITE	SB	113+08 LT
SPEED LIMIT 35	2	60	48	20.00	WHITE	BLACK	SB SB	5126+47 LT 5126+47 LT
SPEED LIMIT 70	2	60	48	20.00	WHITE	BLACK	NB SB	225+00 LT 107+00 RT
SPEED LIMIT 10	2	48	48	16.00	WHITE	BLACK	NB SB	215+06 RT 116+97 LT
DO NOT ENTER	4	48	48	16.00	RED	WHITE	NB NB SB SB	208+87 RT 209+39 LT 122+48 LT 222+67 LT
SPEED LIMIT AT TOLL PLAZA 10 MPH	2	72	198	99.00	YELLOW	BLACK	NB SB	208+00 RT 124+00 LT

SIGN SUMMARY - POST MOUNTED (CONT.)

DESCRIPTION	QUANTITY	SIGN SIZE			COLOR		DIRECTION (NB=NORTHBOUND) (SB=SOUTHBOUND)	LOCATIONS
		HEIGHT (IN)	WIDTH (IN)	AREA (SQ. FT.)	BACK-GROUND	LEGEND		
NEED TO PAY A TOLL? CALL 1-888-MTA-PASS	1	36	60	15.00	BLUE	WHITE	SB	5109+03 LT
KEEP RIGHT EXCEPT TO PASS	1	60	48	20.00	WHITE	BLACK	SB	5152+00 LT
EMERGENCY STOPPING ONLY	1	48	36	12	WHITE	BLACK	SB	5142+23 LT
WIDE LOADS KEEP TO FAR RIGHT	1	48	96	32.00	WHITE	BLACK	SB	5135+11 LT
Save time..save money E-ZPass 1-888-MTA-PASS	1	48	60	20.00	PURPLE	WHITE	NB	223+07 RT
TOLL PLAZA	2	12	48	4.00	YELLOW	BLACK	NB SB	215+06 RT 116+97 LT
END TOLL PLAZA SPEED	1	36	24	6.00	WHITE	BLACK	NB	218+94 RT
WRONG WAY	4	30	42	8.75	RED	WHITE	NB NB SB SB	5105+50 LT 5105+50 RT 5126+47 LT 5126+47 LT
EMERGENCY 911 CELLULAR	1	60	60	25.00	BLUE	WHITE	SB	5168+83 ℄
511 Travel Info www.511Maine.gov	2	36	36	9.00	BLUE	WHITE	NB SB	5161+85 RT 5161+85 RT
	2	48	48	16.00	YELLOW	BLACK	NB SB	212+46 RT 119+35 LT

* SIGN IS MOUNTED ON LIGHT POLE

SIGN SUMMARY - BOOTH MOUNTED

DESCRIPTION	QUANTITY	SIGN SIZE			COLOR		DIRECTION (NB=NORTHBOUND) (SB=SOUTHBOUND)	LOCATIONS
		HEIGHT (IN)	WIDTH (IN)	AREA (SQ. FT.)	BACK-GROUND	LEGEND		
SPEED LIMIT 10	8	48	48	16.00	WHITE	BLACK	NB SB	ISLANDS A, B, C, D ISLANDS D, E, F, G

SIGN SUMMARY - CANOPY MOUNTED

DESCRIPTION	QUANTITY	SIGN SIZE			COLOR		DIRECTION (NB=NORTHBOUND) (SB=SOUTHBOUND)	LOCATIONS
		HEIGHT (IN)	WIDTH (IN)	AREA (SQ. FT.)	BACK-GROUND	LEGEND		
E-ZPass OTHERS PROHIBITED	4	30	42	8.75	PURPLE	WHITE	NB NB SB SB	LANE 3 LANE 4 LANE 5 LANE 6

Date:2/13/2015

Filename: 044_Sign Summary1.dgn

No.	Revision	By	Date

Scale:

Designed by:

HNTB

CONSULTANT PROJECT MANAGER: R. Bruce Munger, P.E.

	By	Date		By	Date
Designed	WA	02/15	Checked	LZD	02/15
Drawn	WA	02/15	In Charge of	RAL	02/15

HNTB CORPORATION
340 County Road, Suite 6-C
Westbrook, ME 04092
TEL (207) 774-5155
FAX (207) 228-0909

MAINE TURNPIKE

THE GOLD STAR MEMORIAL HIGHWAY

MTA PROJECT MANAGER: William Yates

WEST GARDINER BARRIER TOLL PLAZA ORT CONVERSION

SIGN SUMMARY - REMOVE & STACK

SHEET NUMBER: SSUM-01

CONTRACT:2015.11

Date:2/13/2015

REMOVE & RESET SIGN SUMMARY

DESCRIPTION	EXISTING								PROPOSED							
	SIGN SIZE			NUMBER AND TYPE OF POSTS	COLOR		DIRECTION (NB=NORTHBOUND) (SB=SOUTHBOUND)	LOCATION	NUMBER OF POSTS	POST SIZE	HEIGHT OF POST		FOUNDATION SIZE AND TYPE	BREAKAWAY DEVICE	DIRECTION (NB=NORTHBOUND) (SB=SOUTHBOUND)	LOCATION
	HEIGHT (IN)	WIDTH (IN)	AREA (SQ. FT.)		BACK-GROUND	LEGEND					LEFT (FEET)	RIGHT (FEET)				
MAINLINE SIGN #1	96	120	80.00	2 STEEL	PURPLE/ GREEN	WHITE	NB	STA 5106+57	2	W 8 X 18	17.3'	19.0'	24" DIAM	YES	NB	STA 210+50
MAINLINE SIGN #2	96	120	80.00	2 STEEL	PURPLE/ GREEN	WHITE	SB	STA 5137+62	2	W 8 X 18	19.0'	17.5'	24" DIAM	YES	SB	STA 121+50
MAINLINE SIGN #3	60	48	20.00	1 STEEL	WHITE	BLACK	NB	STA 5105+49	1	W 6 X 15	13.5'	N/A	18" DIAM	YES	NB	STA 212+50
MAINLINE SIGN #4	60	48	20.00	1 STEEL	WHITE	BLACK	NB MEDIAN	STA 5105+45	1	W 6 X 15	13.5'	N/A	18" DIAM	YES	NB	STA 119+50
MAINLINE SIGN #5	48	96	32.00	2 STEEL	BLUE	WHITE	NB	STA 5017+20	2	W 8 X 18	13.7'	14.8'	24" DIAM	YES	NB	STA 214+00
MAINLINE SIGN #6	60	48	20.00	1 STEEL	WHITE	BLACK	SB	STA 5107+00	1	6" X 6" WOOD	-	-	-	-	SB	STA 5098+00
MAINLINE SIGN #7	60	48	20.00	1 STEEL	WHITE	BLACK	NB	STA 5125+00	1	6" X 6" WOOD	-	-	-	-	NB	STA 5134+00

NOTE: ONLY THE SIGN PANELS OF MAINLINE SIGNS #6 AND #7 SHALL BE RESET TO THE PROPOSED LOCATION FOR THE DURATION OF CONSTRUCTION. THE EXISTING POSTS SHALL REMAIN IN PLACE FOR THE SIGN PANELS TO BE RESET UPON CONSTRUCTION COMPLETION. PAYMENT FOR WOOD POSTS SHALL BE INCLUDED IN THE RESET ITEM

Filename: 045_Sign Summary2.dgn

Scale:

No.	Revision	By	Date

Designed by: HNTB

CONSULTANT PROJECT MANAGER: R. Bruce Munger, P.E.

	By	Date		By	Date
Designed	WA	02/15	Checked	LZD	02/15
Drawn	WA	02/15	In Charge of	RAL	02/15

HNTB CORPORATION
340 County Road, Suite 6-C
Westbrook, ME 04092
TEL (207) 774-5155
FAX (207) 228-0909

MAINE TURNPIKE

THE GOLD STAR MEMORIAL HIGHWAY

MTA PROJECT MANAGER: William Yates

WEST GARDINER BARRIER TOLL PLAZA
ORT CONVERSION

SIGN SUMMARY - REMOVE & RESET

SHEET NUMBER: SSUM-02

CONTRACT:2015.11

Date:2/13/2015

PROPOSED SIGN SUMMARY

IDENTIFICATION NUMBER	DESCRIPTION	QUANTITY	COLOR		SIGN SIZE			NUMBER OF POSTS	POST SIZE	HEIGHT OF POST*			FOUNDATION SIZE AND TYPE	BREAKAWAY DEVICE	DIRECTION (NB=NORTHBOUND) (SB=SOUTHBOUND)	STATIONS	OFFSET (FROM BASELINE TO SIGN CENTER)	PAY ITEM NUMBER
			BACK-GROUND	LEGEND	HEIGHT (IN)	WIDTH (IN)	AREA (SQ. FT.)			LEFT (FEET)	CENTER (FEET)	RIGHT (FEET)						
M6-2		2	WHITE	BLACK	15	21	2.19	← MOUNT WITH W13-1P →							NB SB	208+50 123+50	RT LT	645.271
OM1-1		2	YELLOW	BLACK	30	30	6.25	← MOUNT TO POST →							NB SB	212+00 120+00	9' RT 9' LT	645.271
R2-1 (10)		2 4	WHITE	BLACK	60	48	20.00	← MOUNT TO LIGHT POLE (MOUNTING HARDWARE INCIDENTAL TO SIGN) → ← MOUNT TO BOOTH (MOUNTING HARDWARE INCIDENTAL TO SIGN) →							NB SB NB NB SB SB	215+06 116+97 ISLAND A ISLAND B ISLAND F ISLAND G	RT LT RT RT LT LT	645.271
R2-1 (70)		2	WHITE	BLACK	60	48	20.00	← MOUNT TO SPACE FRAME (MOUNTING HARDWARE INCIDENTAL TO SIGN) →							NB SB	216+50 115+50	ALONG ALIGNMENT ℄ ALONG ALIGNMENT ℄	645.155
R3-16		6	PURPLE YELLOW GREEN	WHITE BLACK WHITE	156	144	156.00	← MOUNT TO OVERHEAD STRUCTURE →							NB NB NB SB SB SB	5057+18 5080+50 207+00 125+00 5152+00 5195+84	18' 19' 8' LT 3' RT 38' 16'	645.131 645.151 645.121 645.122 645.154 645.132
W4-3		2	YELLOW	BLACK	48	48	16.00	1	W 6 X 9	N/A	14.4' 14.8'	N/A	18" DIAM	YES YES	NB SB	221+50 110+00	40.5' RT 37.7' LT	645.161 & 645.271
W9-6	PAY TOLL 2 MILES CARS $1.75	2	YELLOW	BLACK	96	150	100	2	W 8 X 18	17.8' 17.4'	N/A	19.2' 16.1'	24" DIAM	YES YES	NB SB	5000+75 5226+75	51.7' 58.4'	645.162 & 645.251
W9-6a	STOP AHEAD PAY TOLL CARS $1.75	2	YELLOW	BLACK	96	162	108	2	W 8 X 18	17.8' 19.0'	N/A	19.7' 17.1'	24" DIAM	YES YES	NB SB	211+41 120+48	53' RT 53' LT	645.162 & 645.251
W12-1		2	YELLOW	BLACK	36	36	9.00	← MOUNT TO POST →							NB SB	212+00 120+00	9.0' RT 9.0' LT	645.271
W13-1P		2	YELLOW	BLACK	30	30	6.25	1	W 6 X 9	-	14.3' 14.3'	-	18" DIAM	YES YES	NB SB	208+50 123+50	RT LT	645.271 645.271
SP-1	PAY TOLL 1 MILE CASH CARS $1.75	1	YELLOW GREEN	BLACK WHITE	156	144	156.00	← MOUNT TO OVERHEAD STRUCTURE →							NB	5057+24	30'	645.1311
SP-1a		1	YELLOW GREEN	BLACK WHITE	156	144	156.00	← MOUNT TO OVERHEAD STRUCTURE →							SB	5195+84	25'	645.1321
SP-2		2	YELLOW GREEN	BLACK WHITE	156	144	156.00	← MOUNT TO OVERHEAD STRUCTURE →							NB SB	5080+50 5152+00	33' 27'	645.151 645.154
SP-3	NEED TO PAY A TOLL? CALL 1-888-MTA-PASS	2	BLUE	WHITE	96	162	108.00	2	W 8 X 18	19.2' 17.4'	N/A N/A	22.0' 15.6'	24" DIAM	YES YES	NB SB	5128+00 5105+50	61.3' RT 61.8' LT	645.251

Filename: 046_Sign Summary3.dgn

Scale:

No.	Revision	By	Date

Designed by: HNTB

CONSULTANT PROJECT MANAGER: R. Bruce Munger, P.E.

	By	Date		By	Date
Designed	WA	02/15	Checked	LZD	02/15
Drawn	WA	02/15	In Charge of	RAL	02/15

HNTB CORPORATION
340 County Road, Suite 6-C
Westbrook, ME 04092
TEL (207) 774-5155
FAX (207) 228-0909

MAINE TURNPIKE

THE GOLD STAR MEMORIAL HIGHWAY

MTA PROJECT MANAGER: William Yates

WEST GARDINER BARRIER TOLL PLAZA ORT CONVERSION

SIGN SUMMARY - PROPOSED 1

CONTRACT:2015.11

Date:2/13/2015

PROPOSED SIGN SUMMARY

IDENTIFICATION NUMBER	DESCRIPTION	QUANTITY	COLOR		SIGN SIZE			NUMBER OF POSTS	POST SIZE	HEIGHT OF POST*			FOUNDATION SIZE AND TYPE	BREAKAWAY DEVICE	DIRECTION (NB=NORTHBOUND) (SB=SOUTHBOUND)	STATIONS	OFFSET (FROM BASELINE TO SIGN CENTER)	PAY ITEM NUMBER
			BACK-GROUND	LEGEND	HEIGHT (IN)	WIDTH (IN)	AREA (SQ. FT.)			LEFT (FEET)	CENTER (FEET)	RIGHT (FEET)						
SP-4		2	YELLOW GREEN	BLACK WHITE	162	144	162.00	MOUNT TO OVERHEAD STRUCTURE							NB SB	207+00 125+00	4' RT 8' LT	645.121 645.122
SP-5a	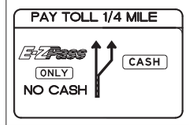	2	WHITE	BLACK	156	288	312.00	MOUNT TO OVERHEAD STRUCTURE							NB SB	5097+75 5139+00	28' RT 21' RT	645.152 645.153
SP-6		1	WHITE	BLACK	36	24	6.00	MOUNT TO LIGHT POLE (MOUNTING HARDWARE INCIDENTAL TO SIGN)							NB	218+94	RT	645.271
SP-6P		2	YELLOW	BLACK	6	24	1.00	MOUNT TO LIGHT POLE (MOUNTING HARDWARE INCIDENTAL TO SIGN)							NB SB	215+06 116+97	RT LT	645.271
SP-7		12	WHITE	BLACK	48	30	10.00	MOUNT TO ORT BARRIER (MOUNTING HARDWARE INCIDENTAL TO SIGN)	POST ASSEMBLY FOR SIGN (INCLUDED FOR PAYMENT UNDER ITEM 607.41)	N/A	1.25' FROM BOTTOM OF SIGN TO TOP OF BARRIER	N/A	N/A	NO NO NO NO NO NO NO NO NO NO NO NO	NB NB NB NB NB NB SB SB SB SB SB SB	212+25 212+25 213+50 213+50 215+00 215+00 117+00 117+00 118+50 118+50 119+75 119+75	℄ OF BARRIER ℄ OF BARRIER ℄ OF BARRIER ℄ OF BARRIER ℄ OF BARRIER ℄ OF BARRIER ℄ OF BARRIER ℄ OF BARRIER ℄ OF BARRIER ℄ OF BARRIER ℄ OF BARRIER ℄ OF BARRIER	645.271 645.271 645.271 645.271 645.271 645.271 645.271 645.271 645.271 645.271 645.271 645.271
SP-7w		4	WHITE	BLACK	36	54	13.5	MOUNT TO SPACE FRAME (MOUNTING HARDWARE INCIDENTAL TO SIGN)							NB NB SB SB	216+50 216+50 115+50 115+50	ALONG ALIGNMENT ℄ ALONG ALIGNMENT ℄ ALONG ALIGNMENT ℄ ALONG ALIGNMENT ℄	645.271 645.271 645.271 645.271
SP-8		2	PURPLE	WHITE	48	60	20.00	MOUNT TO LIGHT POLE (MOUNTING HARDWARE INCIDENTAL TO SIGN)							NB SB	223+00 109+03	RT LT	645.251 645.251
SP-9		1	WHITE	BLACK	48	96	32.00	MOUNT ON EXISTING POSTS							SB	5135+00	RT	645.271

Filename: 047_Sign Summary4.dgn

No.	Revision	By	Date

Scale:

Designed by: HNTB

CONSULTANT PROJECT MANAGER: R. Bruce Munger, P.E.

	By	Date		By	Date
Designed	WA	02/15	Checked	LZA	02/15
Drawn	WA	02/15	In Charge of	RAL	02/15

HNTB CORPORATION
340 County Road, Suite 6-C
Westbrook, ME 04092
TEL (207) 774-5155
FAX (207) 228-0909

MAINE TURNPIKE

THE GOLD STAR MEMORIAL HIGHWAY

MTA PROJECT MANAGER: William Yates

WEST GARDINER BARRIER TOLL PLAZA
ORT CONVERSION

SIGN SUMMARY - PROPOSED 2

CONTRACT:2015.11

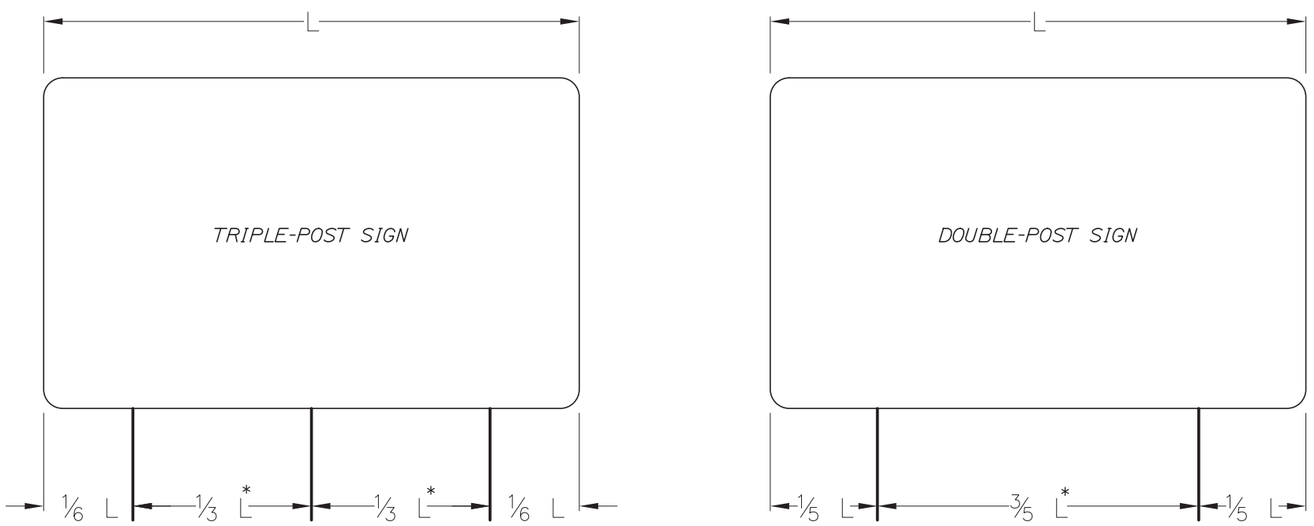

POLE SPACING DETAIL
N.T.S.

* – A MINIMUM 7 FEET REQUIRED WHEN INSTALLED ON BREAKAWAY DEVICES

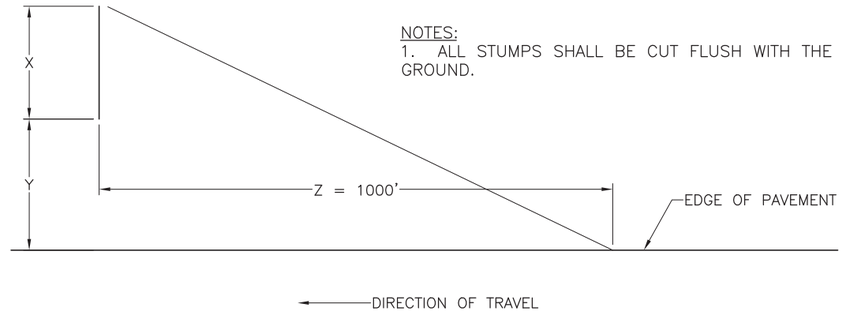

NOTES:
1. ALL STUMPS SHALL BE CUT FLUSH WITH THE GROUND.

WHERE:

X = WIDTH OF SIGN + 10'
Y = OFFSET TO EDGE OF SIGN FROM EDGE OF PAVEMENT
Z = DISTANCE FROM FACE OF SIGN TO A POINT ON THE EDGE OF PAVEMENT 1000' BACK

CLEARING DETAIL
FOR
MAINLINE SIGN INSTALLATION
NO SCALE

SINGLE SUPPORT SIGNS								
FOUNDATION DIAMETER	SIGN AREA (A)	SIGN WIDTH (W)	POST SIZE	BASE PLATE (1) (3)	MATERIAL	ANCHOR BOLTS (2)	BOLT CIRCLE	MAXIMUM MOUNTING HEIGHT
	A < 4 FT^2		U CHANNEL POST					12 FEET TO SIGN CENTER
	4 < A <= 10 FT^2		WOOD POST 6"X6"					
18"	10 < A <= 16 FT^2	W=4'–0" MAX. BUT INCLUDES 5'–0" YIELD SIGN	W6X9	12"X12"X1" 41 LBS.	A36	1" ϕ X 3'-0"	12"	
18"	16 < A <= 25 FT^2	W=5'–0" MAX	W6X15	12"X12"X1" 41 LBS.	A36	1" ϕ X 3'-0"	12"	
24"	25 < A <= 42 FT^2	W=7'–0" MAX	W8X24	14"X14"X1" 55 LBS.	A36	1-1/4" ϕ X 3'-6"	14"	

MULTIPLE SUPPORT SIGNS								
24"	TO 60 FT^2/POST		W8X18	14"X14"X1" 55 LBS.	A36	1-1/4" ϕ X 3'-6"	14"	20 FEET TO SIGN CENTER
24"	60–85 FT^2/POST		W10X22	12"X17"X1–1/4" 72 LBS.	A36	1-1/4" ϕ X 3'-6"	15"	
30"	85–110 FT^2/POST		W12X26	13"X19"X1–1/4" 87 LBS.	A36	1-1/2" ϕ X 4'-0"	15"	
30"	110–135 FT^2/POST		W14X30	14"X21"X1–1/4" 104 LBS.	A36	1-1/2" ϕ X 4'-0"	19"	

GENERAL NOTES
1. BOLTS TO BE 50,000 PSI MINIMUM YIELD STRENGTH.

2. POST TO BASE PLATE WELD SHALL BE 5/16" FILLET WELD.

3. BASE PLATES AND H–BEAMS SHALL BE HOT DIPPED GALVANIZED AFTER FABRICATION IN ACCORDANCE WITH SECTION 720.06.

BREAKAWAY NOTES
1. ON 6"X6" WOOD POSTS, DRILL 3/4" DIAMETER HOLES AT RIGHT ANGLES TO ONE ANOTHER 4 INCHES ABOVE GROUND LEVEL TO MEET BREAKAWAY STANDARDS.

2. ON BREAKAWAY SUPPORTS, THE HINGE SHOULD BE A MINIMUM OF 7 FEET ABOVE THE FOUNDATION. NO PERMANENT SUPPLEMENTARY SIGNS SHALL BE ATTACHED BELOW THE HINGE.

3. A SINGLE POSTED SIGN REQUIRING A BREAKAWAY DEVICE SHALL NOT HAVE A HINGE.

REMOVE AND RESET GUIDE SIGN NOTES
1. EXISTING SIGN POST LENGTHS ARE APPROXIMATE AND SHALL BE FIELD VERIFIED BY THE CONTRACTOR IF THE POSTS ARE TO BE REUSED.

2. THE CONTRACTOR MAY REUSE EXISTING POLES, FOUNDATIONS AND BREAKAWAY DEVICES AT ANY SIGN LOCATION WHERE FEASIBLE.

3. PROPOSED POLE LENGTHS ARE MEASURED FROM THE TOP OF THE FOUNDATION TO THE TOP OF SIGN AND ARE APPROXIMATE. FINAL POST LENGTHS SHALL BE DETERMINED BY THE CONTRACTOR ONCE FOUNDATIONS ARE PLACED.

Date:2/13/2015

Filename: 048_Signing-Details.dgn

Scale:

No.	Revision	By	Date

Designed by: HNTB

CONSULTANT PROJECT MANAGER: R. Bruce Munger, P.E.

	By	Date		By	Date
Designed	WA	02/15	Checked	LZD	02/15
Drawn	WA	02/15	In Charge of	RAL	02/15

HNTB CORPORATION
340 County Road, Suite 6-C
Westbrook, ME 04092
TEL (207) 774-5155
FAX (207) 228-0909

MAINE TURNPIKE

THE GOLD STAR MEMORIAL HIGHWAY

MTA PROJECT MANAGER: William Yates

WEST GARDINER BARRIER TOLL PLAZA
ORT CONVERSION

SIGNING DETAILS

SHEET NUMBER: SDET-01

CONTRACT:2015.11

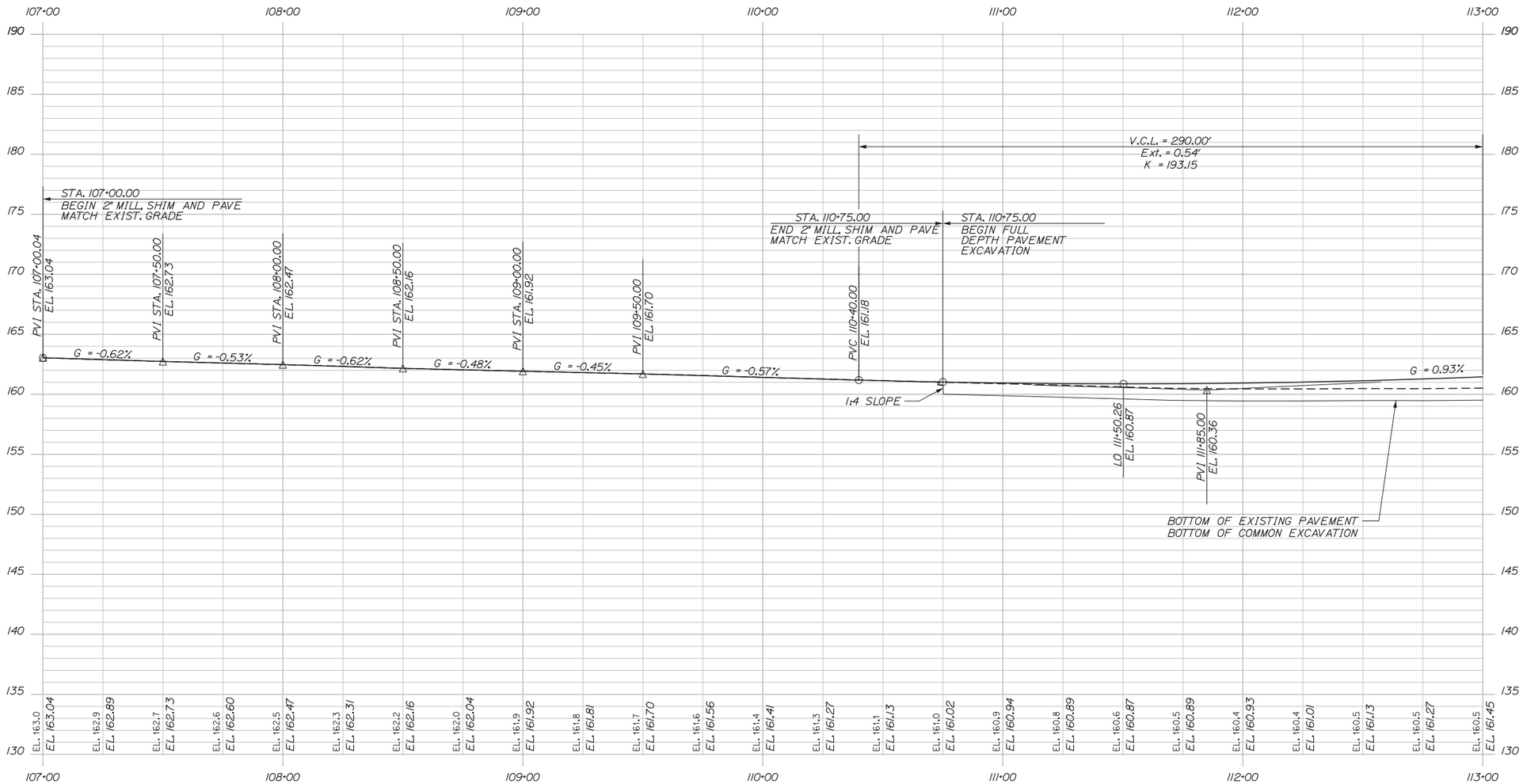

SOUTHBOUND ORT PROFILE

Date:2/13/2015

Filename: 049_Profile1.dgn

Scale: 25 0 25 50
Scale of Feet

No.	Revision	By	Date

Designed by: HNTB

CONSULTANT PROJECT MANAGER: R. Bruce Munger, P.E.

	By	Date		By	Date
Designed	CJG	02/15	Checked	RWH	02/15
Drawn	CJG	02/15	In Charge of	RAL	02/15

HNTB CORPORATION
340 County Road, Suite 6-C
Westbrook, ME 04092
TEL (207) 774-5155
FAX (207) 228-0909

MAINE TURNPIKE

THE GOLD STAR MEMORIAL HIGHWAY

MTA PROJECT MANAGER: William Yates

WEST GARDINER BARRIER TOLL PLAZA ORT CONVERSION

PROFILE SOUTHBOUND 1

SHEET NUMBER: PR-01

CONTRACT:2015.11

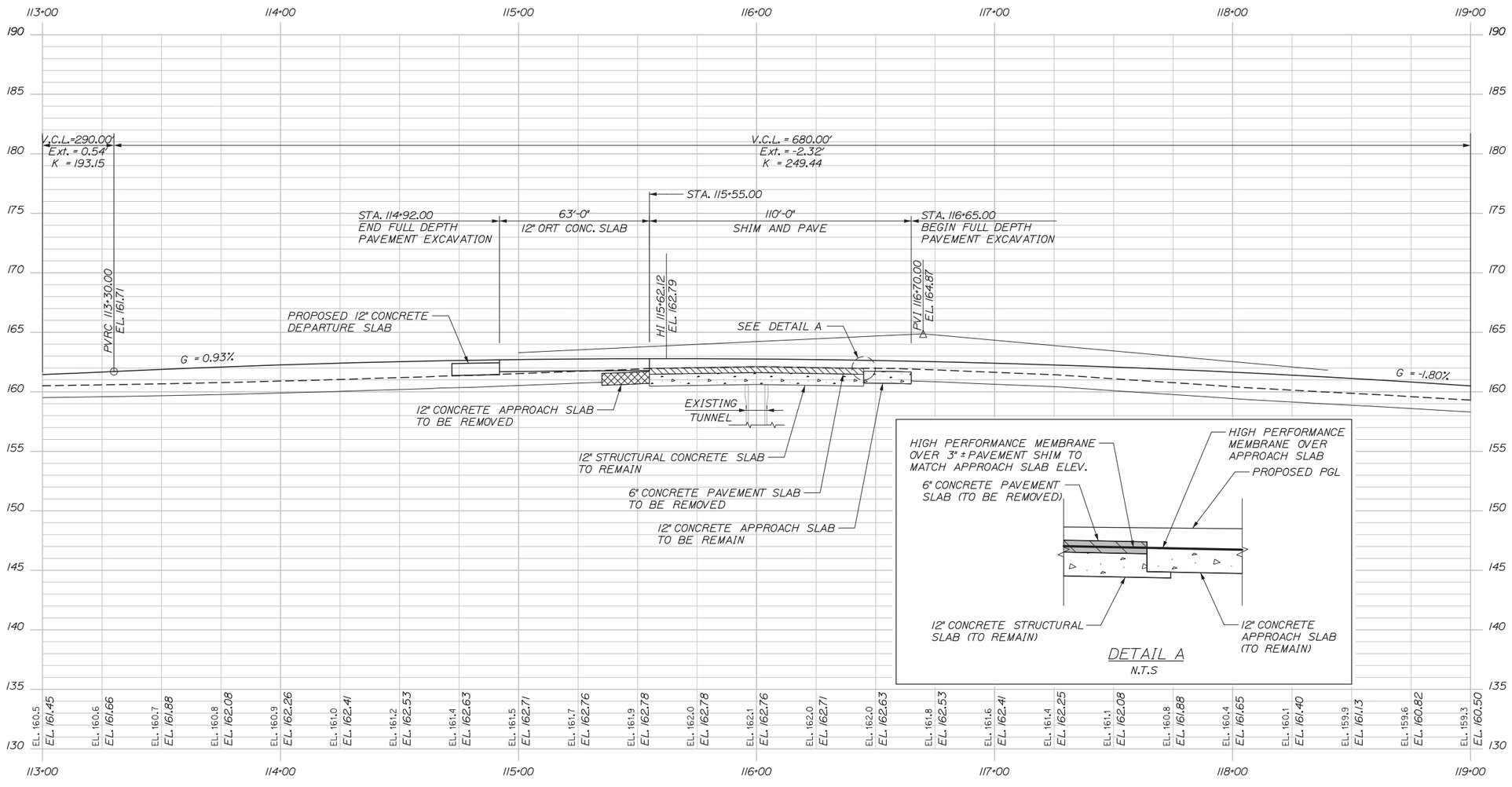

SOUTHBOUND ORT PROFILE

Date:2/13/2015

Filename: 050_Profile2.dgn

Scale: 25 0 25 50
Scale of Feet

No.	Revision	By	Date

Designed by: HNTB

CONSULTANT PROJECT MANAGER: R. Bruce Munger, P.E.

	By	Date		By	Date
Designed	CJG	02/15	Checked	RWH	02/15
Drawn	CJG	02/15	In Charge of	RAL	02/15

HNTB CORPORATION
340 County Road, Suite 6-C
Westbrook, ME 04092
TEL (207) 774-5155
FAX (207) 228-0909

MAINE TURNPIKE

THE GOLD STAR MEMORIAL HIGHWAY

MTA PROJECT MANAGER: William Yates

WEST GARDINER BARRIER TOLL PLAZA ORT CONVERSION

PROFILE SOUTHBOUND 2

SHEET NUMBER: PR-02

CONTRACT:2015.11

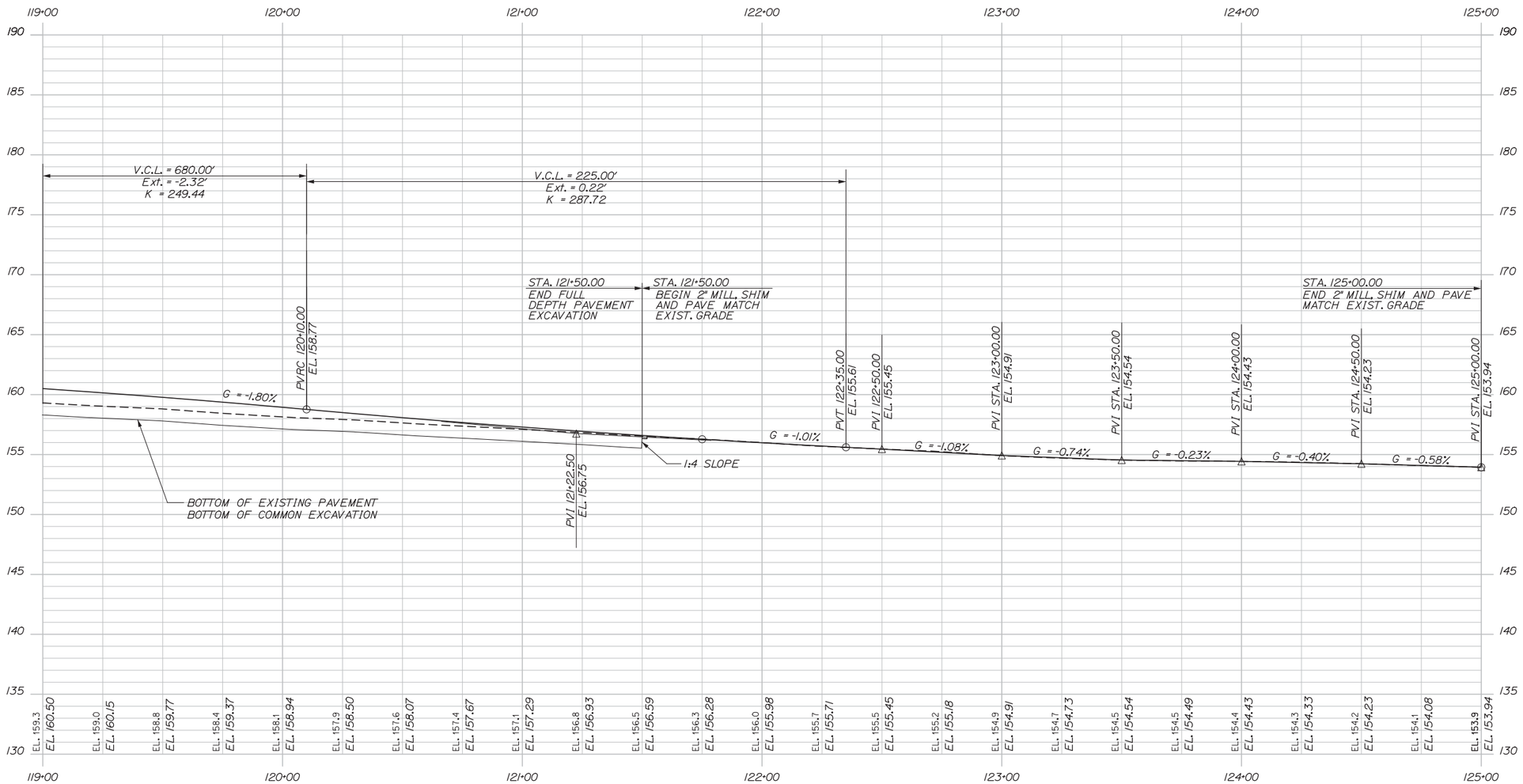

SOUTHBOUND ORT PROFILE

Date:2/13/2015

Filename: 051_Profile3.dgn

Scale: 25 0 25 50
Scale of Feet

No.	Revision	By	Date

Designed by: HNTB

CONSULTANT PROJECT MANAGER: R. Bruce Munger, P.E.

	By	Date		By	Date
Designed	CJG	02/15	Checked	RWH	02/15
Drawn	CJG	02/15	In Charge of	RAL	02/15

HNTB CORPORATION
340 County Road, Suite 6-C
Westbrook, ME 04092
TEL (207) 774-5155
FAX (207) 228-0909

MAINE TURNPIKE

THE GOLD STAR MEMORIAL HIGHWAY

MTA PROJECT MANAGER: William Yates

WEST GARDINER BARRIER TOLL PLAZA ORT CONVERSION

PROFILE SOUTHBOUND 3

SHEET NUMBER: PR-03

CONTRACT:2015.11

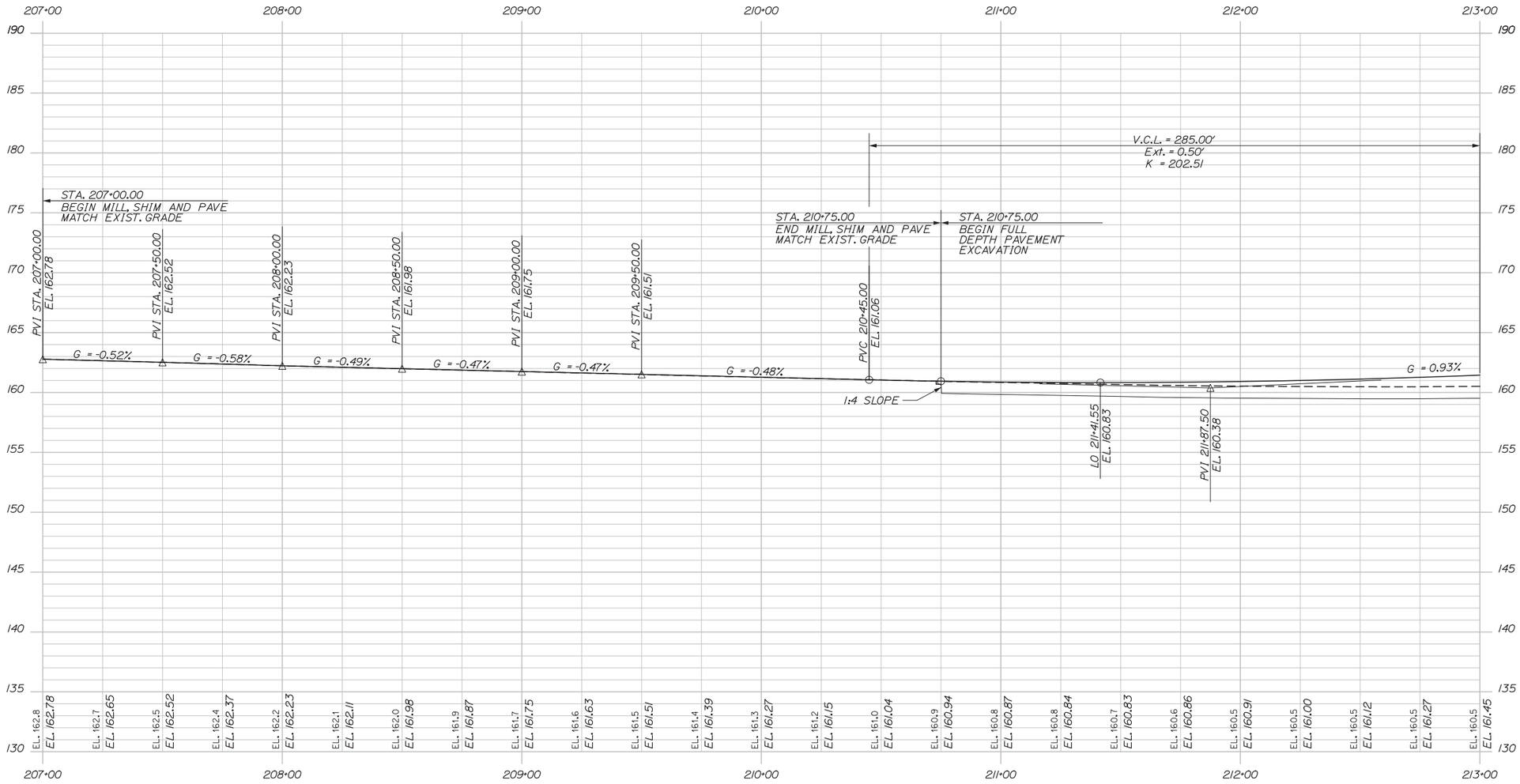

NORTHBOUND ORT PROFILE

Date:2/13/2015

Filename: 052_Profile4.dgn

Scale: 25 0 25 50
Scale of Feet

No.	Revision	By	Date

Designed by: HNTB

CONSULTANT PROJECT MANAGER: R. Bruce Munger, P.E.

	By	Date		By	Date
Designed	CJG	02/15	Checked	RWH	02/15
Drawn	CJG	02/15	In Charge of	RAL	02/15

HNTB CORPORATION
340 County Road, Suite 6-C
Westbrook, ME 04092
TEL (207) 774-5155
FAX (207) 228-0909

MAINE TURNPIKE

THE GOLD STAR MEMORIAL HIGHWAY

MTA PROJECT MANAGER: William Yates

WEST GARDINER BARRIER TOLL PLAZA ORT CONVERSION

PROFILE NORTHBOUND 1

SHEET NUMBER: PR-04

CONTRACT:2015.11

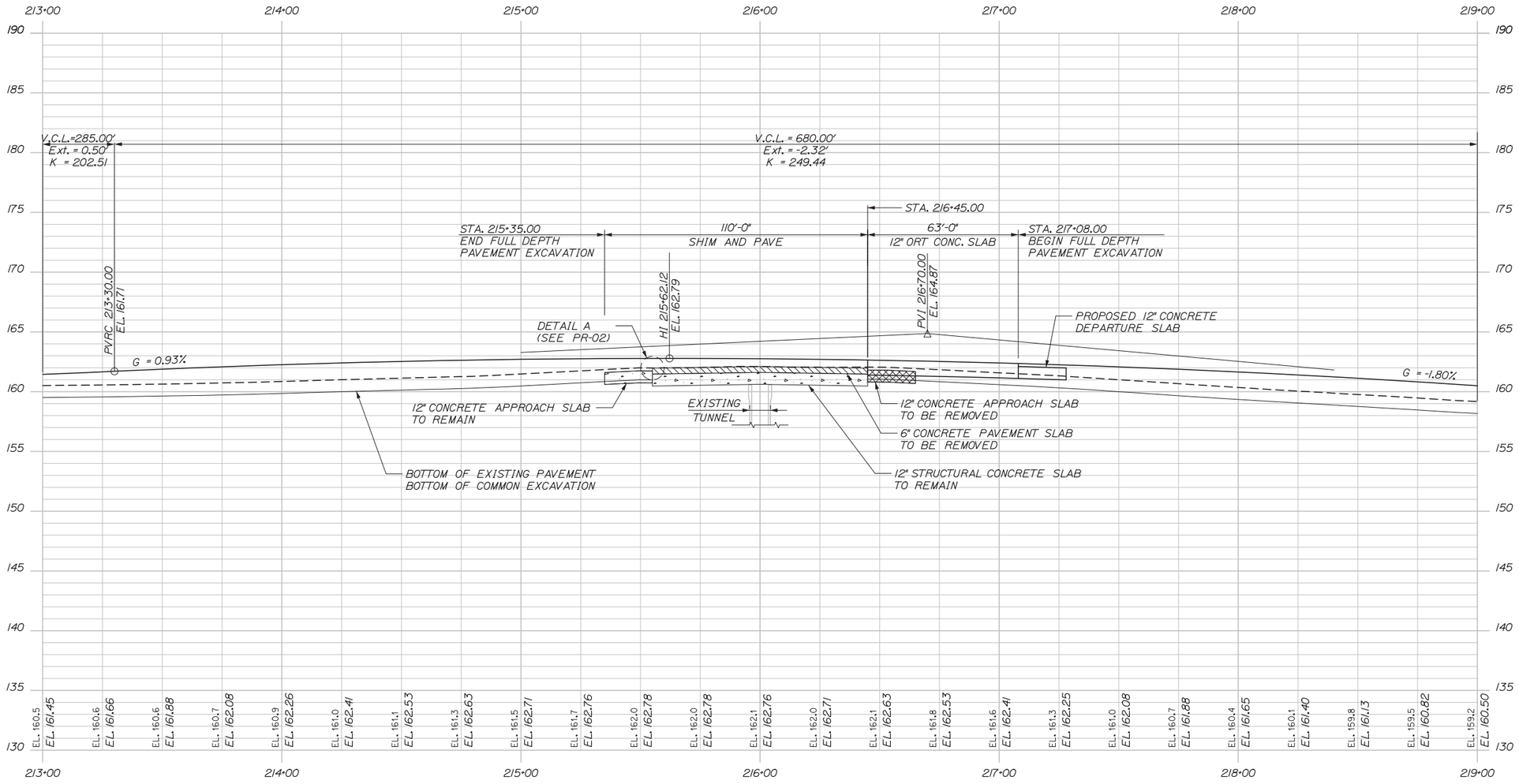

NORTHBOUND ORT PROFILE

Date:2/13/2015

Filename: 053_Profile5.dgn

Scale: 25 0 25 50
Scale of Feet

No.	Revision	By	Date

Designed by: HNTB

CONSULTANT PROJECT MANAGER: R. Bruce Munger, P.E.

	By	Date		By	Date
Designed	CJG	02/15	Checked	RWH	02/15
Drawn	CJG	02/15	In Charge of	RAL	02/15

HNTB CORPORATION
340 County Road, Suite 6-C
Westbrook, ME 04092
TEL (207) 774-5155
FAX (207) 228-0909

MAINE TURNPIKE

THE GOLD STAR MEMORIAL HIGHWAY

MTA PROJECT MANAGER: William Yates

WEST GARDINER BARRIER TOLL PLAZA ORT CONVERSION

PROFILE NORTHBOUND 2

SHEET NUMBER: PR-05

CONTRACT:2015.11

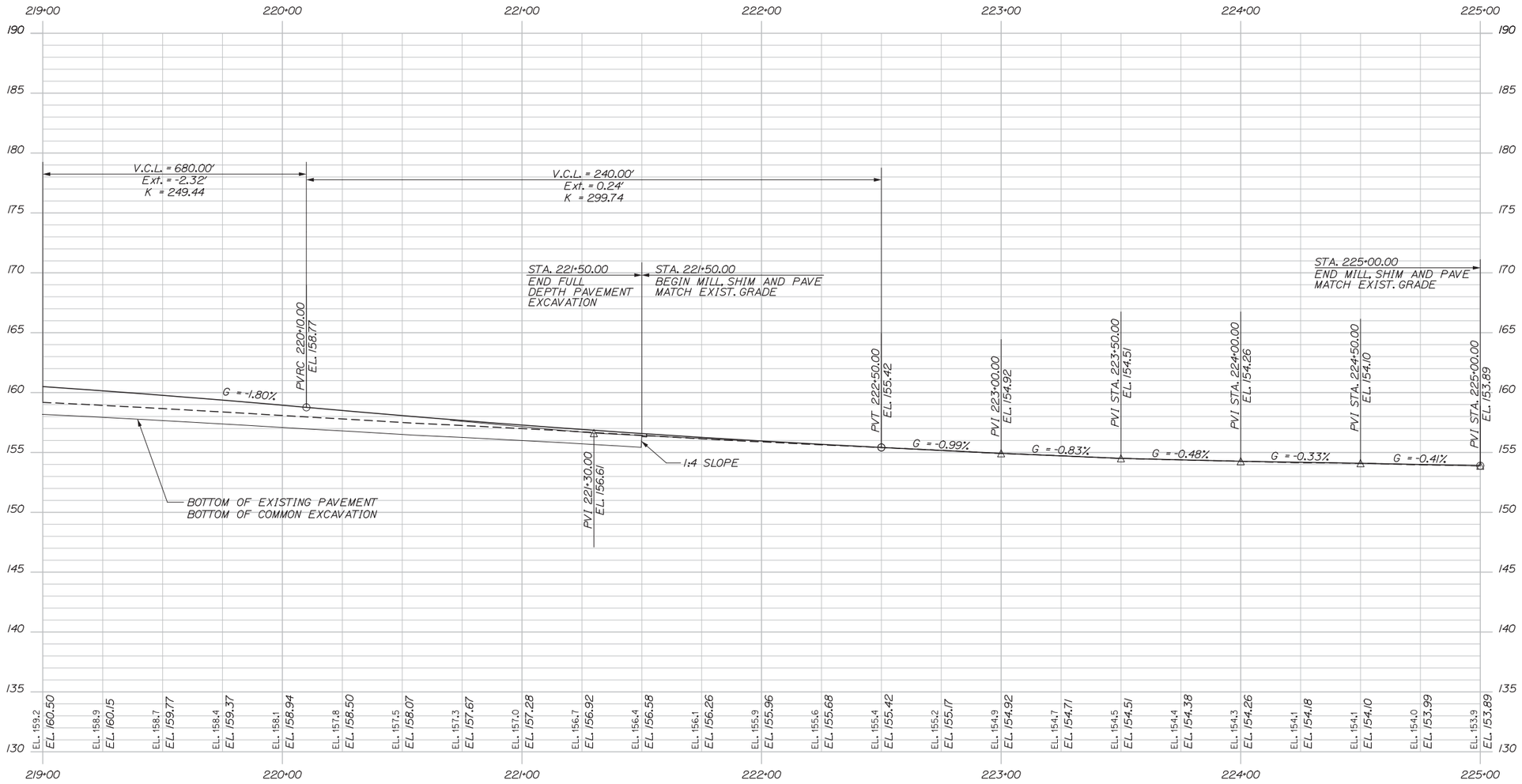

NORTHBOUND ORT PROFILE

Date:2/13/2015

Filename: 054_Profile6.dgn

Scale: 25 0 25 50
Scale of Feet

No.	Revision	By	Date

Designed by: HNTB

CONSULTANT PROJECT MANAGER: R. Bruce Munger, P.E.

	By	Date		By	Date
Designed	CJG	02/15	Checked	RWH	02/15
Drawn	CJG	02/15	In Charge of	RAL	02/15

HNTB CORPORATION
340 County Road, Suite 6-C
Westbrook, ME 04092
TEL (207) 774-5155
FAX (207) 228-0909

MAINE TURNPIKE

THE GOLD STAR MEMORIAL HIGHWAY

MTA PROJECT MANAGER: William Yates

WEST GARDINER BARRIER TOLL PLAZA
ORT CONVERSION
PROFILE
NORTHBOUND 3

SHEET NUMBER: PR-06

CONTRACT:2015.11

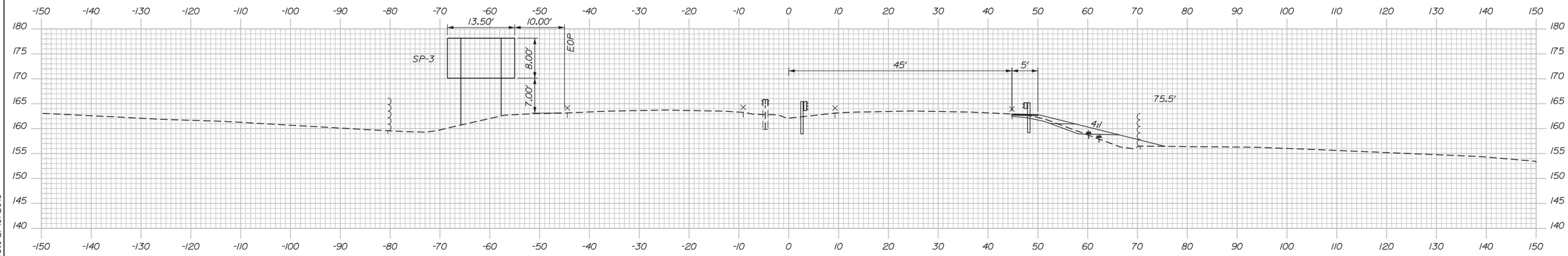

5105+50.00

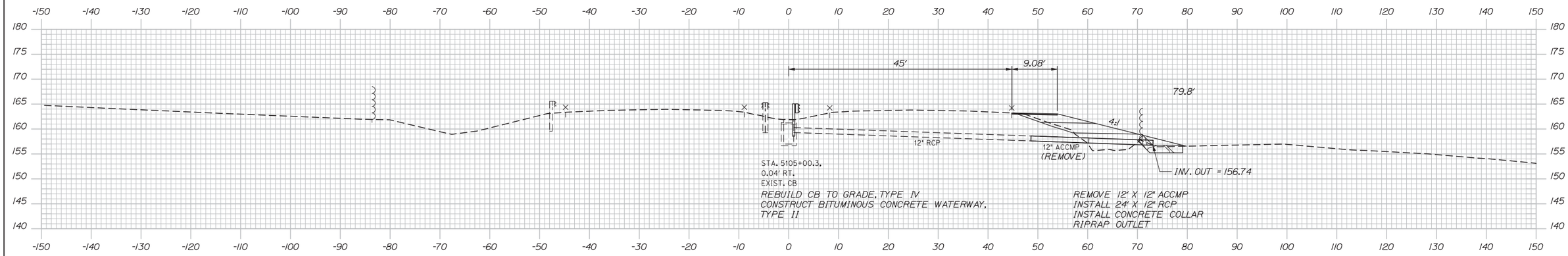

5105+00.00

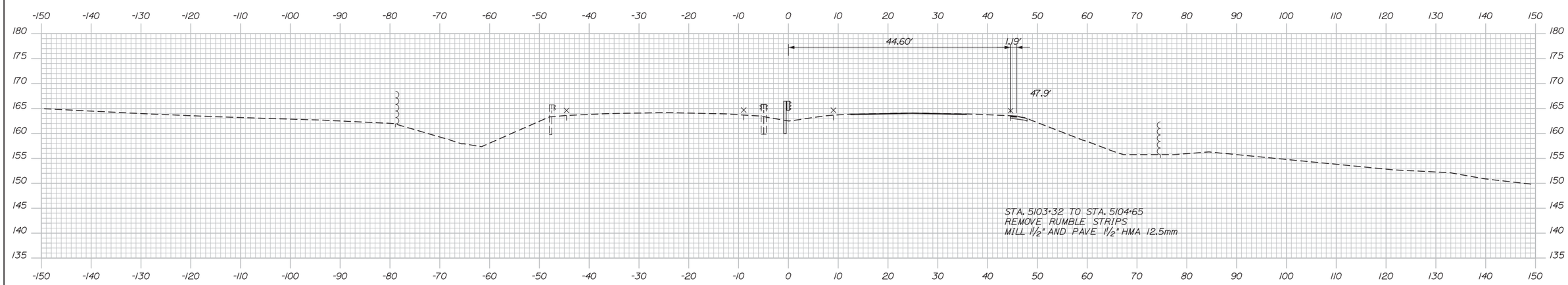

5104+50.00

Date:2/13/2015

Filename: Xsect.dgn

No.	Revision	By	Date

Scale:

Designed by:

HNTB

CONSULTANT PROJECT MANAGER: R. Bruce Munger, P.E.

	By	Date		By	Date
Designed	CJG	02/15	Checked	LZD	02/15
Drawn	MPC	02/15	In Charge of	RAL	02/15

HNTB CORPORATION
340 County Road, Suite 6-C
Westbrook, ME 04092
TEL (207) 774-5155
FAX (207) 228-0909

MAINE TURNPIKE

THE GOLD STAR MEMORIAL HIGHWAY

MTA PROJECT MANAGER: William Yates

WEST GARDINER BARRIER TOLL PLAZA ORT CONVERSION

CROSS SECTIONS STA. 5104+50 TO STA. 5105+50

SHEET NUMBER: XS-01

CONTRACT:2015.11

Date:2/13/2015

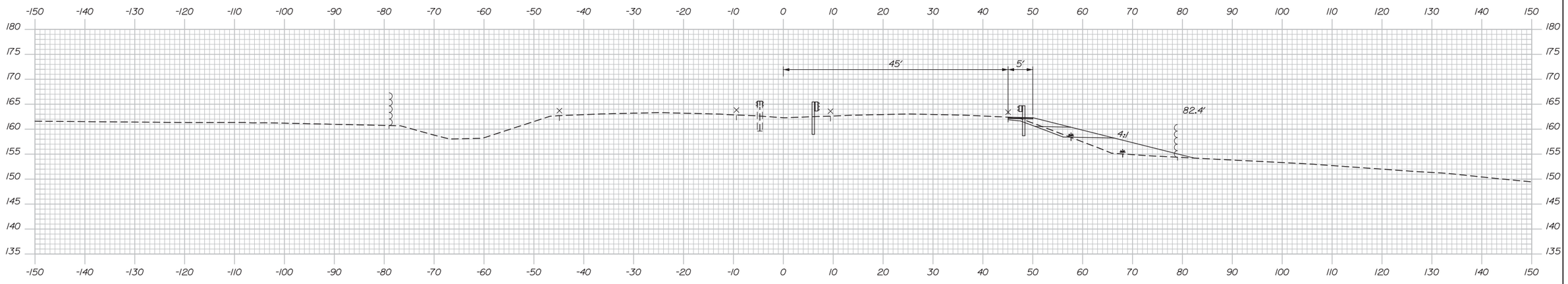

5106+50.00

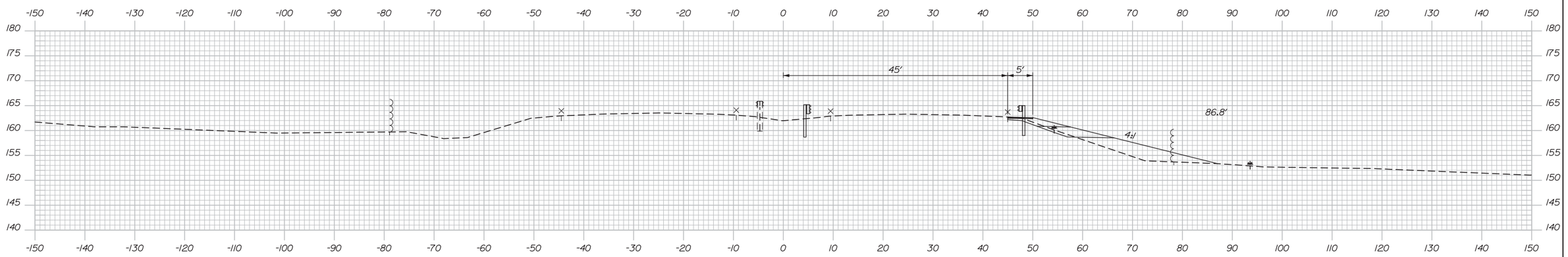

5106+00.00

Scale:

Designed by:

HNTB

No.	Revision	By	Date

CONSULTANT PROJECT MANAGER: R. Bruce Munger, P.E.

	By	Date		By	Date
Designed	CJG	02/15	Checked	LZD	02/15
Drawn	MPC	02/15	In Charge of	RAL	02/15

HNTB CORPORATION
340 County Road, Suite 6-C
Westbrook, ME 04092
TEL (207) 774-5155
FAX (207) 228-0909

MAINE TURNPIKE

THE GOLD STAR MEMORIAL HIGHWAY

MTA PROJECT MANAGER: William Yates

WEST GARDINER BARRIER TOLL PLAZA ORT CONVERSION

CROSS SECTIONS STA. 5106+00 TO STA. 5106+50

SHEET NUMBER: XS-02

CONTRACT:2015.11

Filename: Xsect.dgn

Date:2/13/2015

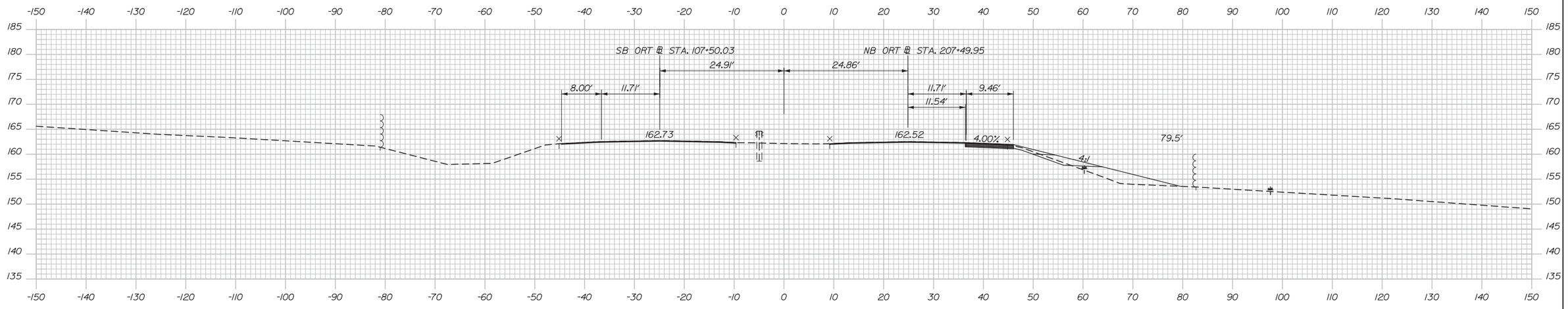

5107+50.00

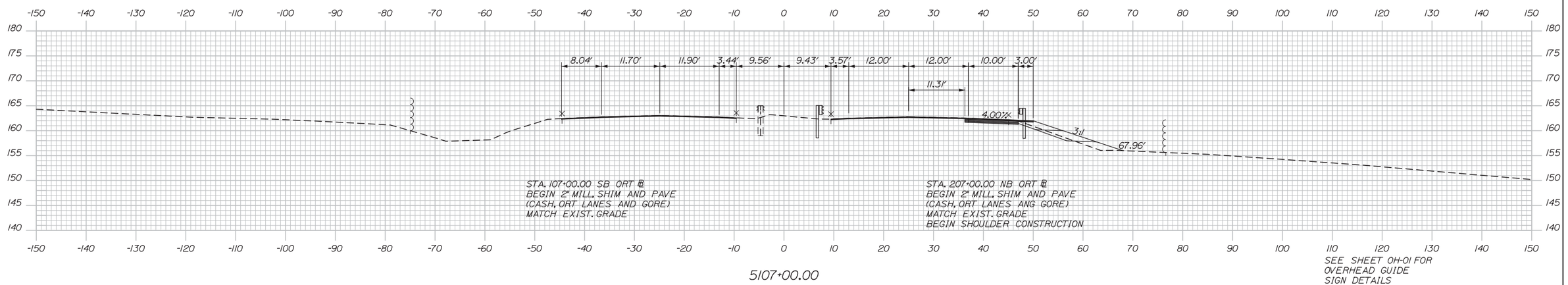

5107+00.00

SEE SHEET OH-01 FOR
OVERHEAD GUIDE
SIGN DETAILS

Filename: Xsect.dgn

Scale:

No.	Revision	By	Date

Designed by:

HNTB

CONSULTANT PROJECT MANAGER: R. Bruce Munger, P.E.

	By	Date		By	Date
Designed	CJG	02/15	Checked	LZD	02/15
Drawn	MPC	02/15	In Charge of	RAL	02/15

HNTB CORPORATION
340 County Road, Suite 6-C
Westbrook, ME 04092
TEL (207) 774-5155
FAX (207) 228-0909

MAINE TURNPIKE

THE GOLD STAR MEMORIAL HIGHWAY

MTA PROJECT MANAGER: William Yates

WEST GARDINER BARRIER TOLL PLAZA ORT CONVERSION

CROSS SECTIONS STA. 5107+00 TO STA. 5107+50

SHEET NUMBER: XS-03

CONTRACT:2015.11

Date:2/13/2015

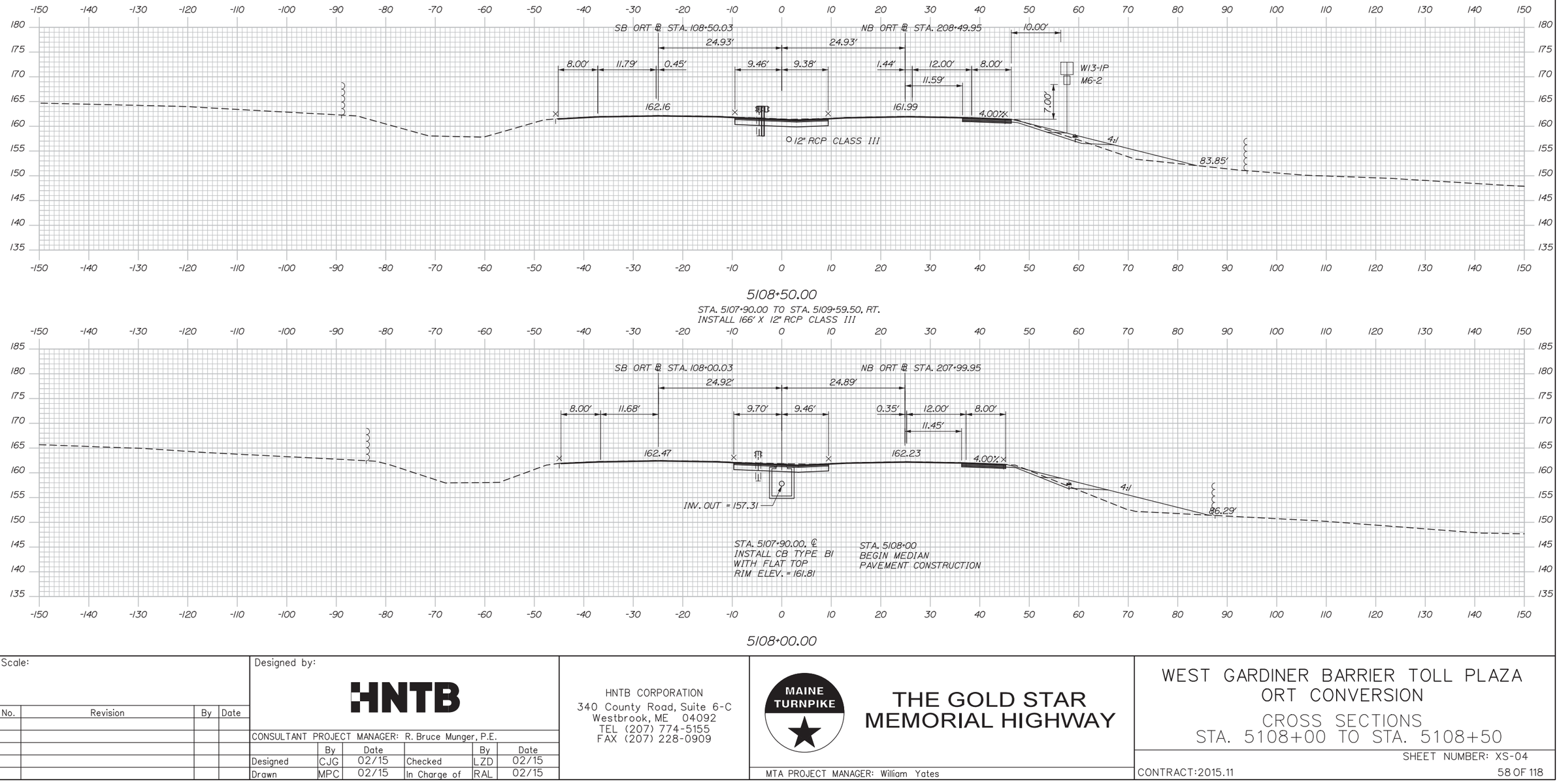

5108+50.00

STA. 5107+90.00 TO STA. 5109+59.50, RT.
INSTALL 166' X 12" RCP CLASS III

5108+00.00

Filename: Xsect.dgn

Scale:

No.	Revision	By	Date

Designed by: HNTB

CONSULTANT PROJECT MANAGER: R. Bruce Munger, P.E.

	By	Date		By	Date
Designed	CJG	02/15	Checked	LZD	02/15
Drawn	MPC	02/15	In Charge of	RAL	02/15

HNTB CORPORATION
340 County Road, Suite 6-C
Westbrook, ME 04092
TEL (207) 774-5155
FAX (207) 228-0909

MAINE TURNPIKE

THE GOLD STAR MEMORIAL HIGHWAY

MTA PROJECT MANAGER: William Yates

WEST GARDINER BARRIER TOLL PLAZA ORT CONVERSION

CROSS SECTIONS STA. 5108+00 TO STA. 5108+50

CONTRACT:2015.11

SHEET NUMBER: XS-04

Date:2/13/2015

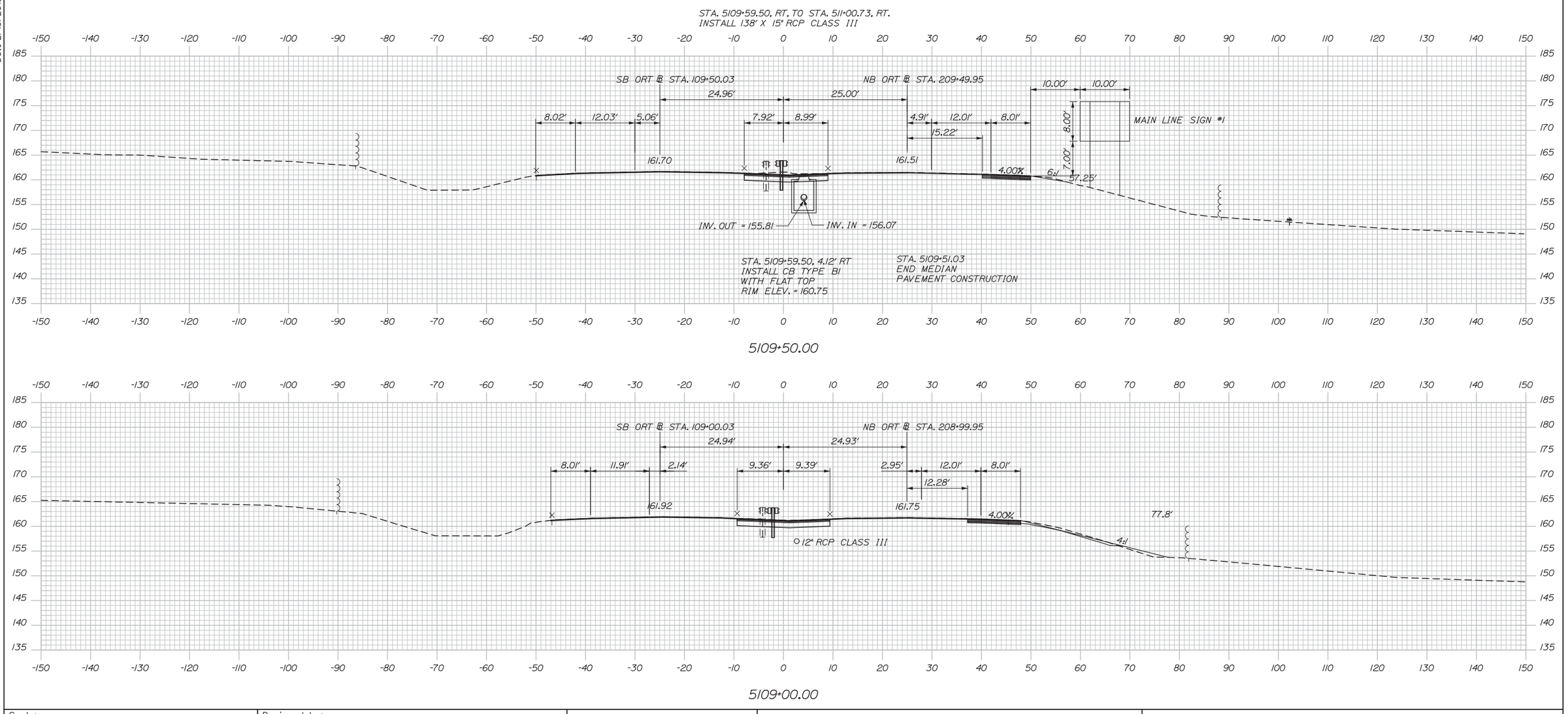

Filename: Xsect.dgn

Scale:				Designed by: HNTB					
No.	Revision	By	Date	CONSULTANT PROJECT MANAGER: R. Bruce Munger, P.E.					
					By	Date		By	Date
				Designed	CJG	02/15	Checked	LZD	02/15
				Drawn	MPC	02/15	In Charge of	RAL	02/15

HNTB CORPORATION
340 County Road, Suite 6-C
Westbrook, ME 04092
TEL (207) 774-5155
FAX (207) 228-0909

MAINE TURNPIKE

THE GOLD STAR MEMORIAL HIGHWAY

MTA PROJECT MANAGER: William Yates

WEST GARDINER BARRIER TOLL PLAZA ORT CONVERSION

CROSS SECTIONS STA. 5109+00 TO STA. 5109+50

SHEET NUMBER: XS-05

CONTRACT:2015.11

Date:2/13/2015

STA. 110+75.00 SB ORT ℄
END 2" MILL, SHIM AND PAVE
(CASH, ORT LANES AND GORE)
MATCH EXIST. GRADE
BEGIN FULL DEPTH PAVEMENT EXCAVATION
(ORT LANES AND GORE)
BEGIN 2" MILL, SHIM AND PAVE
(CASH LANE OUTSIDE SHOULDER)

STA. 210+75.00 NB ORT ℄
END 2" MILL, SHIM AND PAVE
(ORT LANES AND GORE)
MATCH EXIST. GRADE
BEGIN FULL DEPTH PAVEMENT EXCAVATION
(ORT LANES AND GORE)

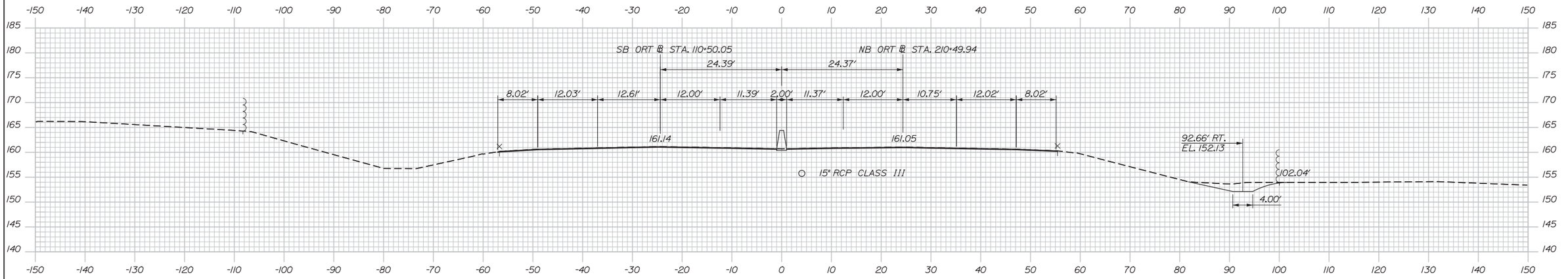

5110+50.00

STA. 210+42.10 NB ORT ℄
END SHOULDER CONSTRUCTION
RT. SIDE ONLY

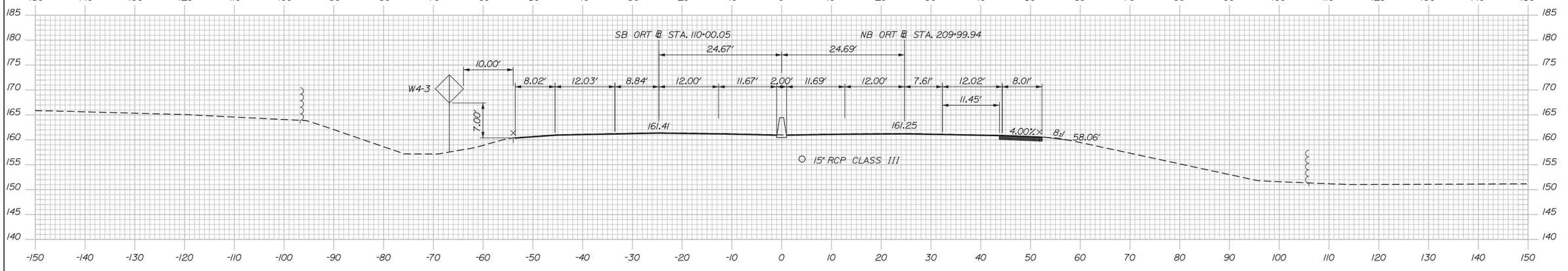

5110+00.00

Filename: Xsect.dgn

Scale:

No.	Revision	By	Date

Designed by:

HNTB

CONSULTANT PROJECT MANAGER: R. Bruce Munger, P.E.

	By	Date		By	Date
Designed	CJG	02/15	Checked	LZD	02/15
Drawn	MPC	02/15	In Charge of	RAL	02/15

HNTB CORPORATION
340 County Road, Suite 6-C
Westbrook, ME 04092
TEL (207) 774-5155
FAX (207) 228-0909

MAINE TURNPIKE

THE GOLD STAR MEMORIAL HIGHWAY

MTA PROJECT MANAGER: William Yates

WEST GARDINER BARRIER TOLL PLAZA ORT CONVERSION

CROSS SECTIONS STA. 5110+00 TO STA. 5110+50

SHEET NUMBER: XS-06

CONTRACT:2015.11

Date:2/13/2015

STA. 5111+69.46, RT. TO STA. 5112+18.16, RT.
INSTALL 45' X 15" RCP CLASS III

STA. 5111+69.45, 4.00' LT.
INSTALL CB TYPE BI
WITH OFFSET FLAT TOP
RIM ELEV. = 160.28

STA. 5111+69.46, 4.00' RT.
INSTALL CB TYPE BI
WITH OFFSET FLAT TOP
RIM ELEV. = 160.26

STA. 5111+69.45, LT. TO STA. 5111+69.46, RT.
INSTALL 4.00' X 12" RCP CLASS III

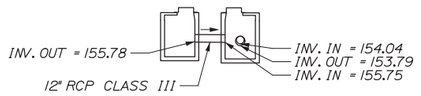

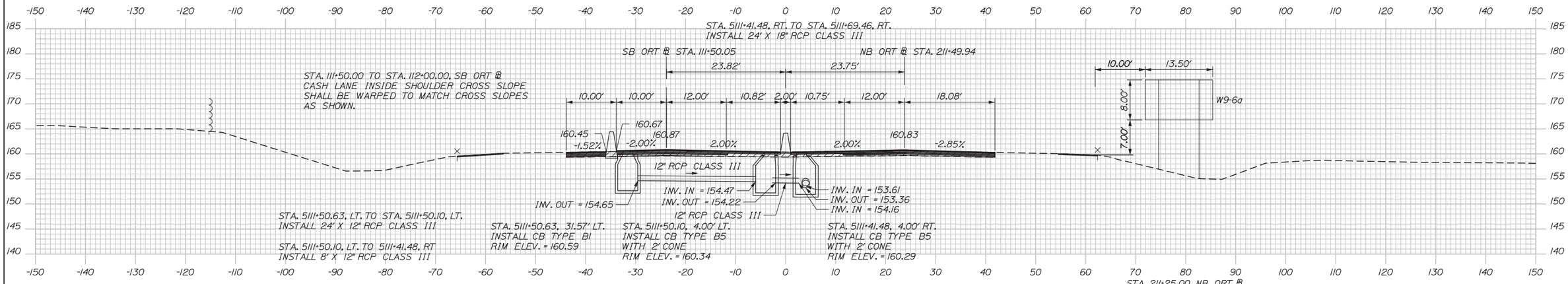

5111+50.00

STA. 5111+00.73, RT. TO STA. 5111+41.48, RT.
INSTALL 37' X 18" RCP CLASS III

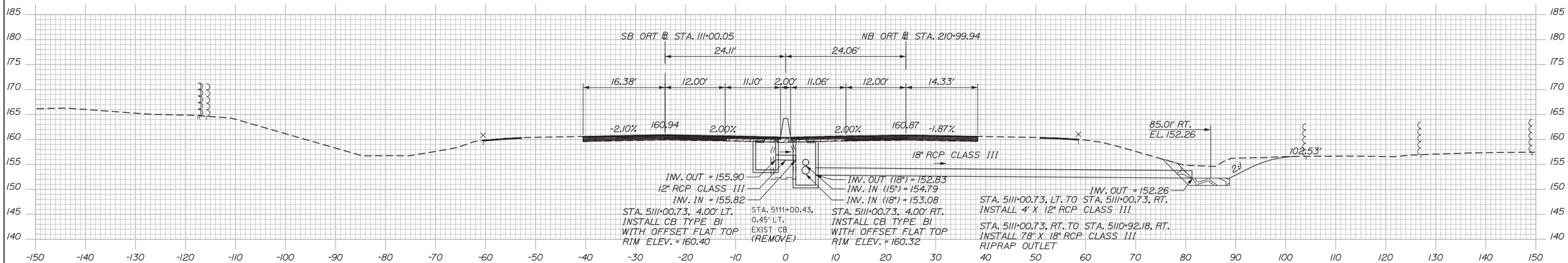

5111+00.00

Filename: Xsect.dgn

Scale:				Designed by: HNTB					
No.	Revision	By	Date						
				CONSULTANT PROJECT MANAGER: R. Bruce Munger, P.E.					
					By	Date		By	Date
				Designed	CJG	02/15	Checked	LZD	02/15
				Drawn	MPC	02/15	In Charge of	RAL	02/15

HNTB CORPORATION
340 County Road, Suite 6-C
Westbrook, ME 04092
TEL (207) 774-5155
FAX (207) 228-0909

MAINE TURNPIKE

THE GOLD STAR MEMORIAL HIGHWAY

MTA PROJECT MANAGER: William Yates

WEST GARDINER BARRIER TOLL PLAZA ORT CONVERSION

CROSS SECTIONS STA. 5111+00 TO STA. 5111+50

SHEET NUMBER: XS-07

CONTRACT:2015.11

Date:2/13/2015

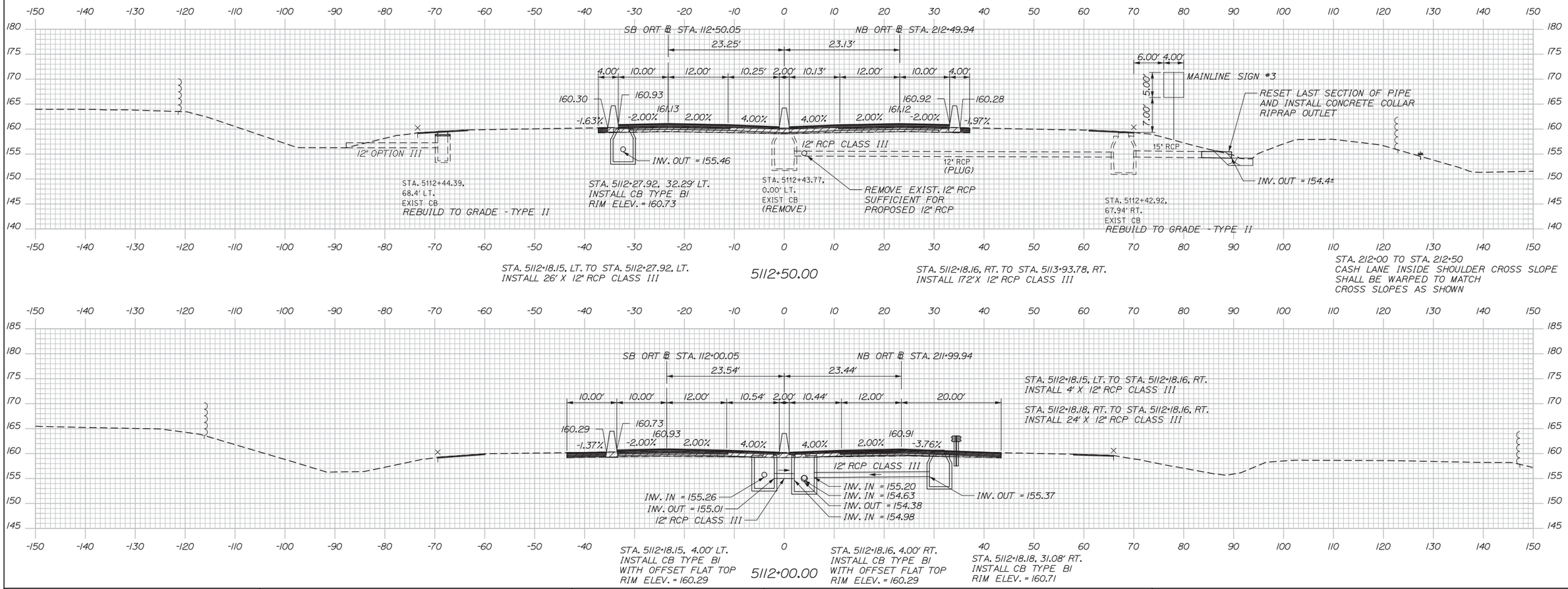

Scale:

Designed by:

HNTB

No.	Revision	By	Date

CONSULTANT PROJECT MANAGER: R. Bruce Munger, P.E.

	By	Date		By	Date
Designed	CJG	02/15	Checked	LZD	02/15
Drawn	MPC	02/15	In Charge of	RAL	02/15

HNTB CORPORATION
340 County Road, Suite 6-C
Westbrook, ME 04092
TEL (207) 774-5155
FAX (207) 228-0909

MAINE TURNPIKE

THE GOLD STAR MEMORIAL HIGHWAY

MTA PROJECT MANAGER: William Yates

WEST GARDINER BARRIER TOLL PLAZA ORT CONVERSION

CROSS SECTIONS STA. 5112+00 TO STA. 5112+50

SHEET NUMBER: XS-08

CONTRACT:2015.11

Filename: Xsect.dgn

Date:2/13/2015

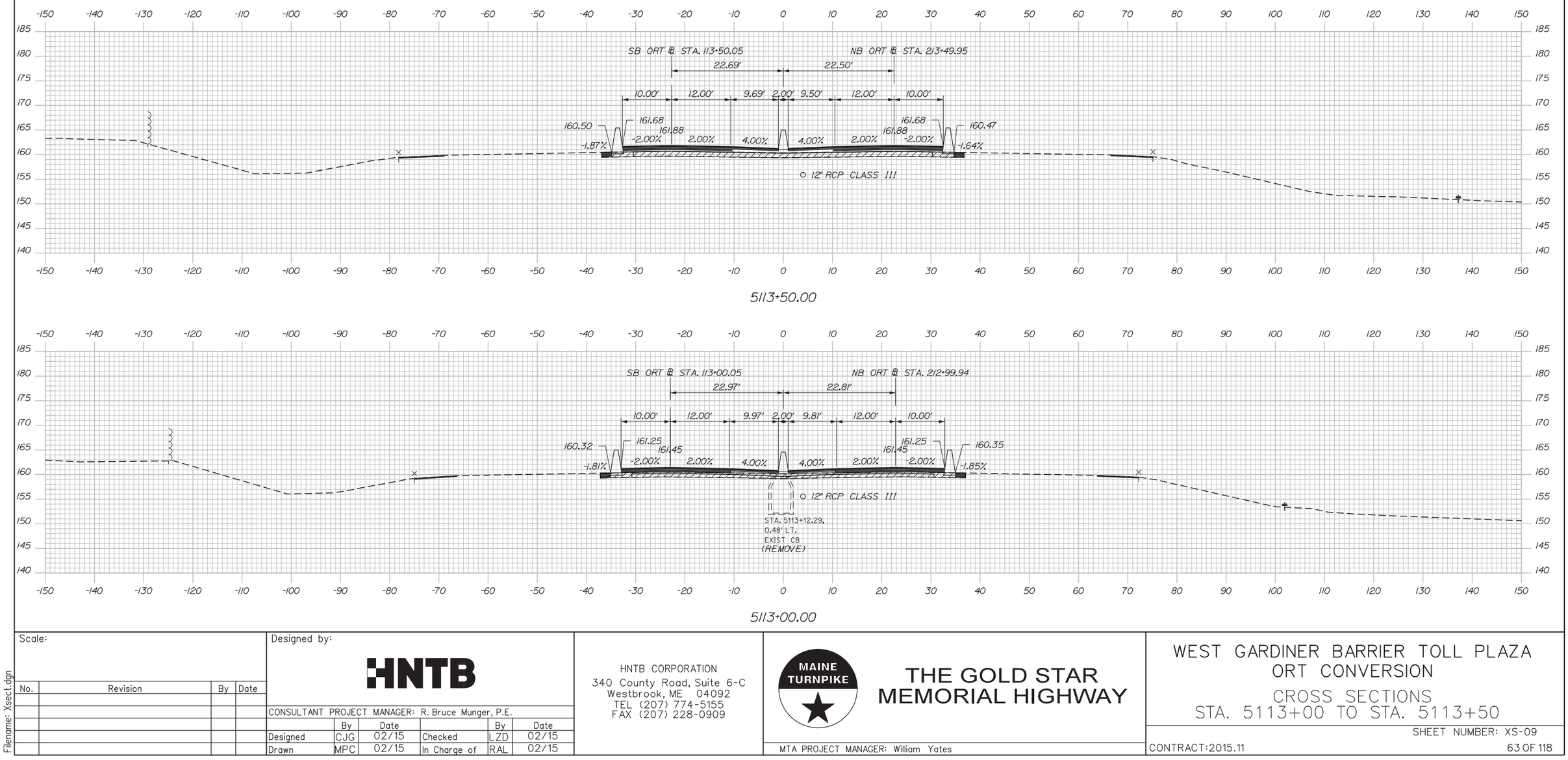

5113+50.00

5113+00.00

Filename: Xsect.dgn

Scale:

No.	Revision	By	Date

Designed by:

HNTB

CONSULTANT PROJECT MANAGER: R. Bruce Munger, P.E.

	By	Date		By	Date
Designed	CJG	02/15	Checked	LZD	02/15
Drawn	MPC	02/15	In Charge of	RAL	02/15

HNTB CORPORATION
340 County Road, Suite 6-C
Westbrook, ME 04092
TEL (207) 774-5155
FAX (207) 228-0909

MAINE TURNPIKE

THE GOLD STAR MEMORIAL HIGHWAY

MTA PROJECT MANAGER: William Yates

WEST GARDINER BARRIER TOLL PLAZA ORT CONVERSION

CROSS SECTIONS STA. 5113+00 TO STA. 5113+50

SHEET NUMBER: XS-09

CONTRACT:2015.11

Date:2/13/2015

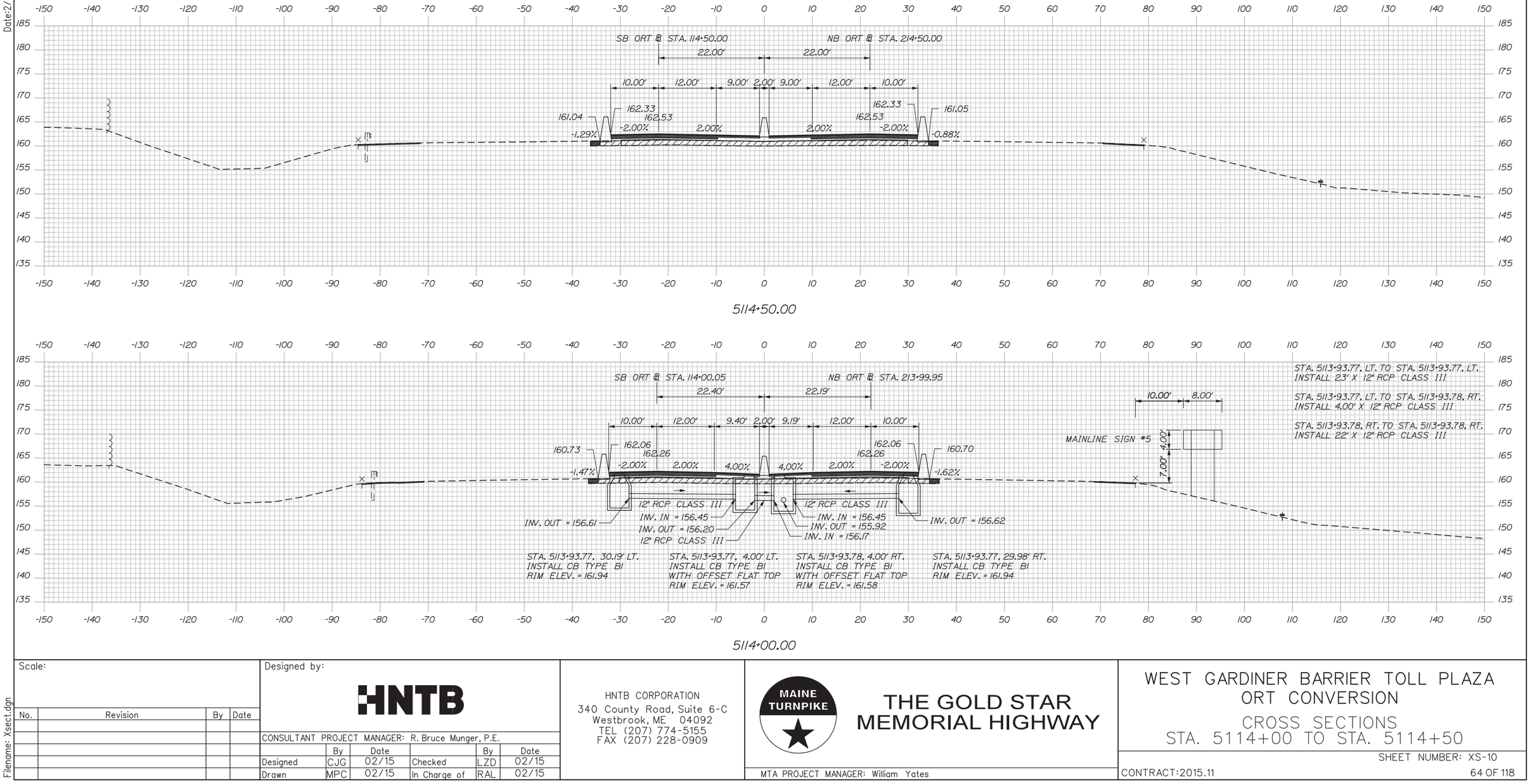

Filename: Xsect.dgn

Scale:

No.	Revision	By	Date

Designed by: HNTB

CONSULTANT PROJECT MANAGER: R. Bruce Munger, P.E.

	By	Date		By	Date
Designed	CJG	02/15	Checked	LZD	02/15
Drawn	MPC	02/15	In Charge of	RAL	02/15

HNTB CORPORATION
340 County Road, Suite 6-C
Westbrook, ME 04092
TEL (207) 774-5155
FAX (207) 228-0909

MAINE TURNPIKE

THE GOLD STAR MEMORIAL HIGHWAY

MTA PROJECT MANAGER: William Yates

WEST GARDINER BARRIER TOLL PLAZA ORT CONVERSION

CROSS SECTIONS STA. 5114+00 TO STA. 5114+50

SHEET NUMBER: XS-10

CONTRACT:2015.11

Date:2/13/2015

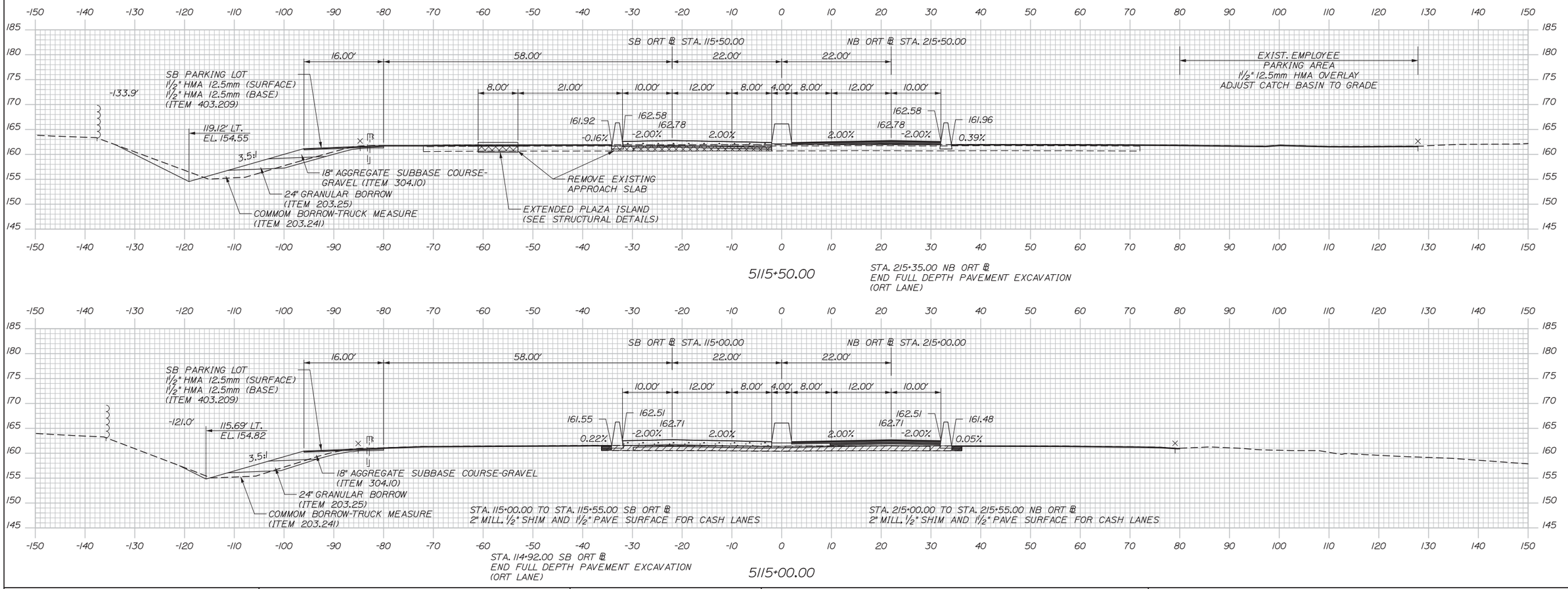

Filename: Xsect.dgn

Scale:

No.	Revision	By	Date

Designed by: HNTB

CONSULTANT PROJECT MANAGER: R. Bruce Munger, P.E.

	By	Date		By	Date
Designed	CJG	02/15	Checked	LZD	02/15
Drawn	MPC	02/15	In Charge of	RAL	02/15

HNTB CORPORATION
340 County Road, Suite 6-C
Westbrook, ME 04092
TEL (207) 774-5155
FAX (207) 228-0909

MAINE TURNPIKE

THE GOLD STAR MEMORIAL HIGHWAY

MTA PROJECT MANAGER: William Yates

WEST GARDINER BARRIER TOLL PLAZA ORT CONVERSION

CROSS SECTIONS STA. 5115+00 TO STA. 5115+50

SHEET NUMBER: XS-11

CONTRACT:2015.11

Date:2/13/2015

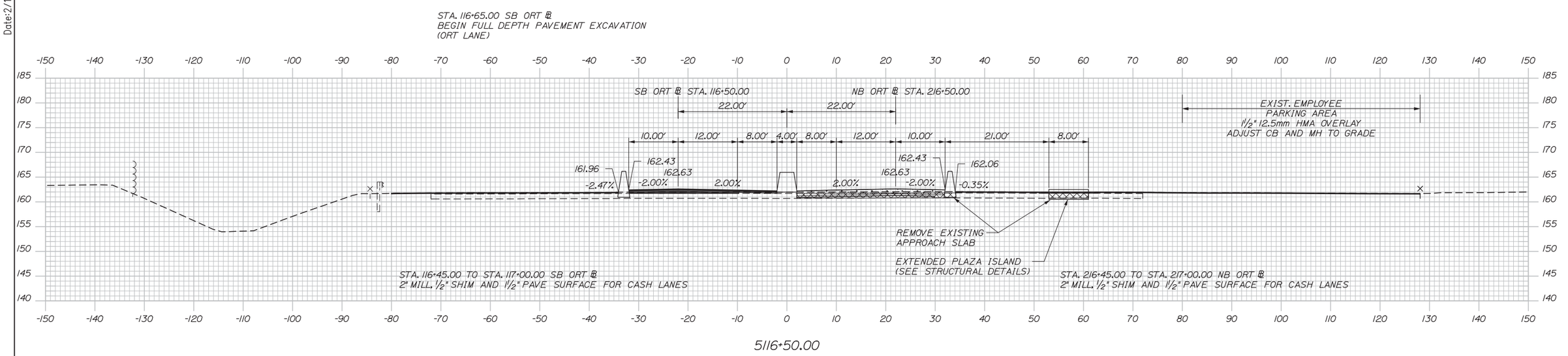

5116+50.00

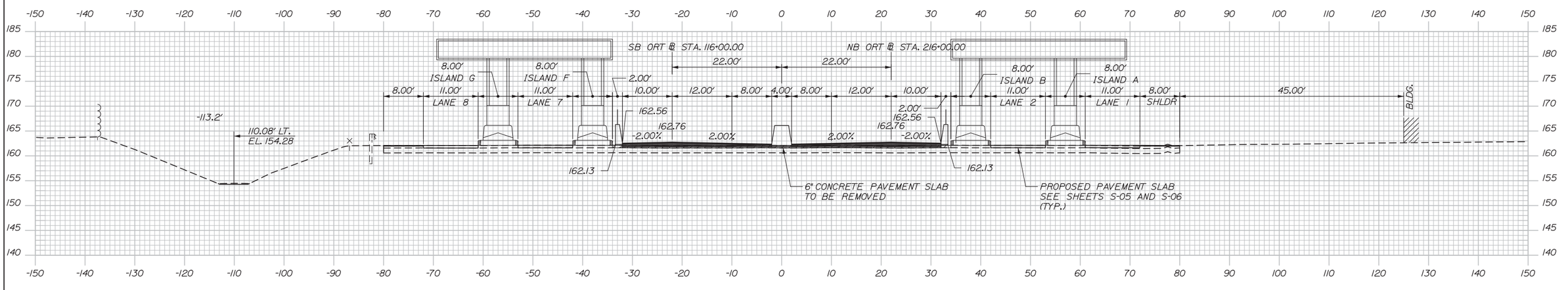

5116+00.00

Filename: Xsect.dgn

Scale:

No.	Revision	By	Date

Designed by: HNTB

CONSULTANT PROJECT MANAGER: R. Bruce Munger, P.E.

	By	Date		By	Date
Designed	CJG	02/15	Checked	LZD	02/15
Drawn	MPC	02/15	In Charge of	RAL	02/15

HNTB CORPORATION
340 County Road, Suite 6-C
Westbrook, ME 04092
TEL (207) 774-5155
FAX (207) 228-0909

MAINE TURNPIKE

THE GOLD STAR MEMORIAL HIGHWAY

MTA PROJECT MANAGER: William Yates

WEST GARDINER BARRIER TOLL PLAZA ORT CONVERSION

CROSS SECTIONS STA. 5116+00 TO STA. 5116+50

SHEET NUMBER: XS-12

CONTRACT:2015.11

Date:2/13/2015

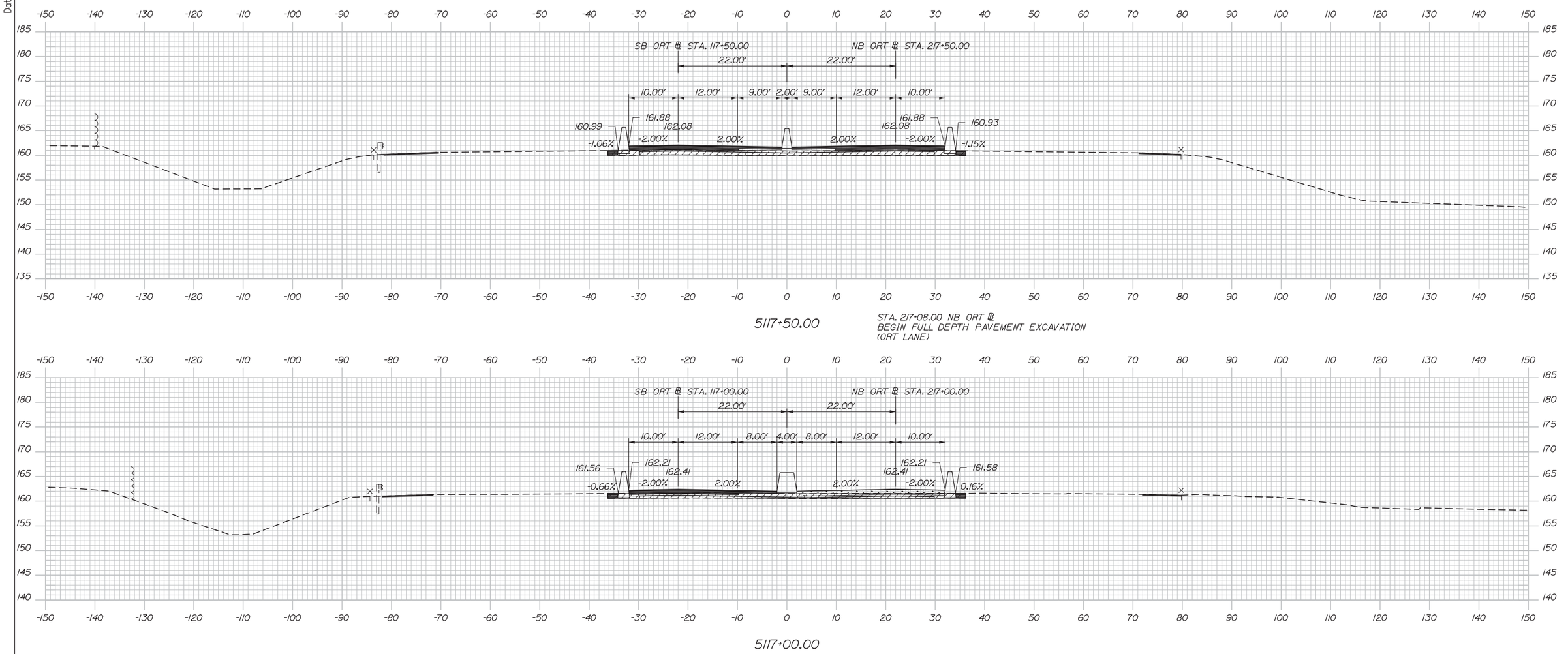

5117+50.00

STA. 217+08.00 NB ORT ℄
BEGIN FULL DEPTH PAVEMENT EXCAVATION
(ORT LANE)

5117+00.00

Filename: Xsect.dgn

Scale:

No.	Revision	By	Date

Designed by:

HNTB

CONSULTANT PROJECT MANAGER: R. Bruce Munger, P.E.

	By	Date		By	Date
Designed	CJG	02/15	Checked	LZD	02/15
Drawn	MPC	02/15	In Charge of	RAL	02/15

HNTB CORPORATION
340 County Road, Suite 6-C
Westbrook, ME 04092
TEL (207) 774-5155
FAX (207) 228-0909

MAINE TURNPIKE

THE GOLD STAR MEMORIAL HIGHWAY

MTA PROJECT MANAGER: William Yates

WEST GARDINER BARRIER TOLL PLAZA ORT CONVERSION

CROSS SECTIONS STA. 5117+00 TO STA. 5117+50

SHEET NUMBER: XS-13

CONTRACT:2015.11

Date:2/13/2015

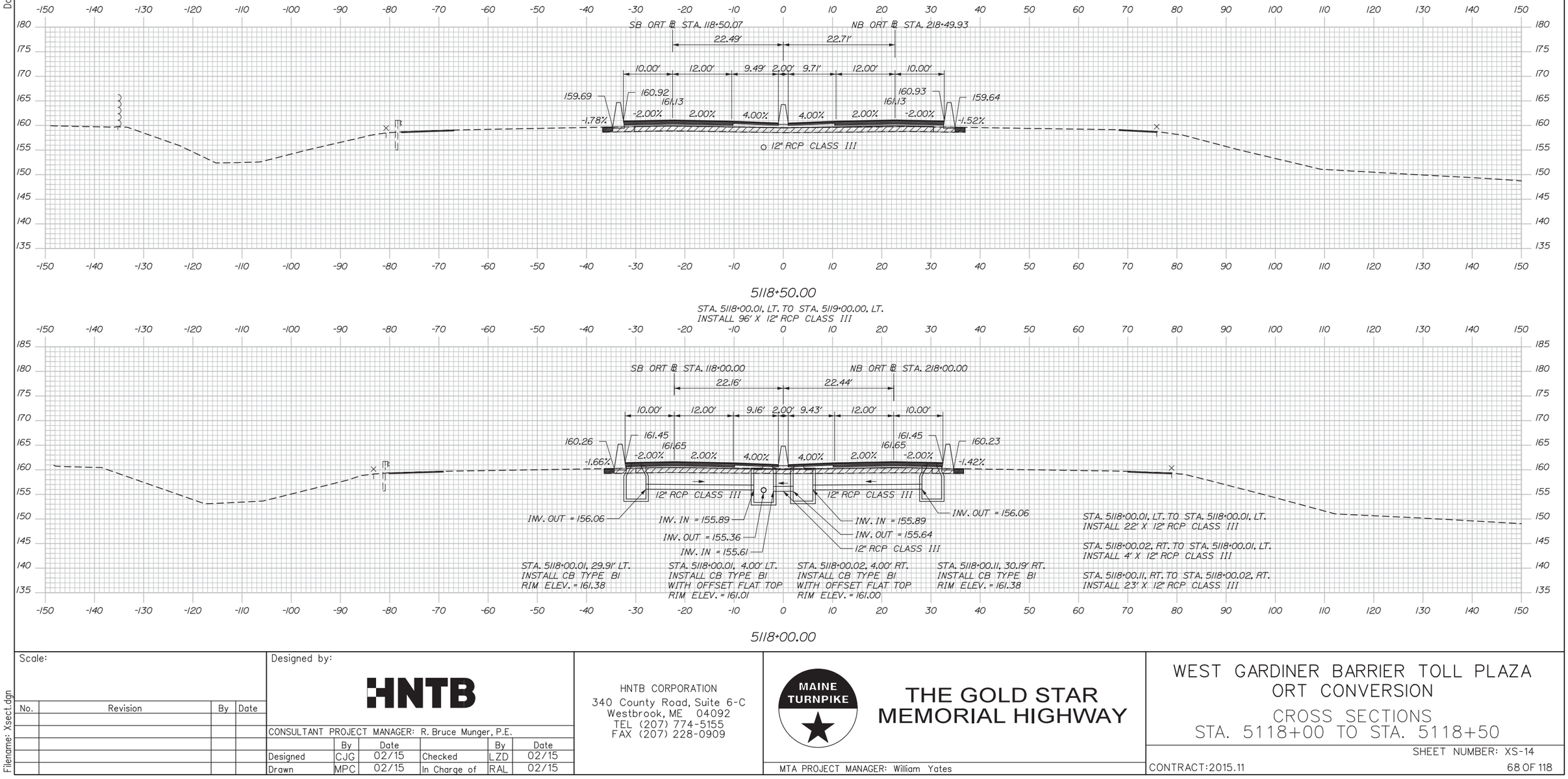

5118+50.00

STA. 5118+00.01, LT. TO STA. 5119+00.00, LT.
INSTALL 96' X 12" RCP CLASS III

5118+00.00

Scale:

No.	Revision	By	Date

Designed by:

HNTB

CONSULTANT PROJECT MANAGER: R. Bruce Munger, P.E.

	By	Date		By	Date
Designed	CJG	02/15	Checked	LZD	02/15
Drawn	MPC	02/15	In Charge of	RAL	02/15

HNTB CORPORATION
340 County Road, Suite 6-C
Westbrook, ME 04092
TEL (207) 774-5155
FAX (207) 228-0909

MAINE TURNPIKE

THE GOLD STAR MEMORIAL HIGHWAY

MTA PROJECT MANAGER: William Yates

WEST GARDINER BARRIER TOLL PLAZA ORT CONVERSION

CROSS SECTIONS STA. 5118+00 TO STA. 5118+50

SHEET NUMBER: XS-14

CONTRACT:2015.11

Filename: Xsect.dgn

Date:2/13/2015

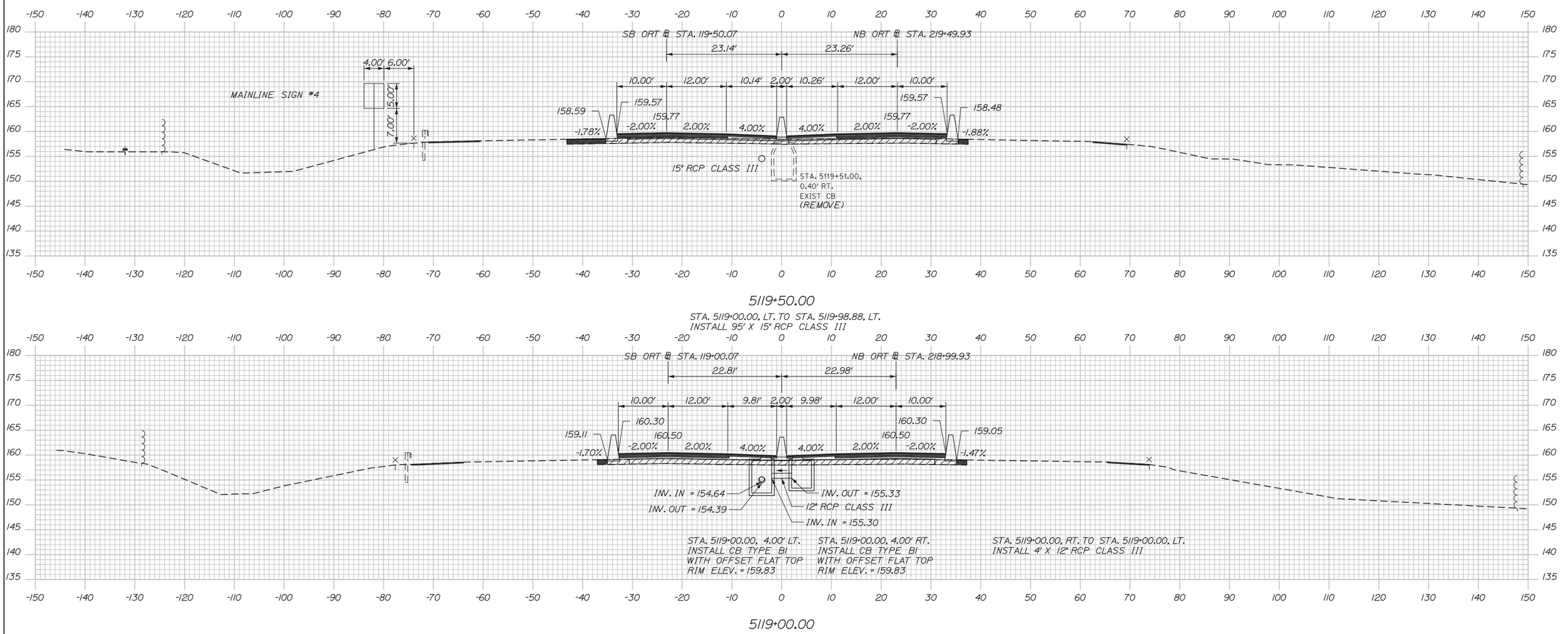

5119+50.00

STA. 5119+00.00, LT. TO STA. 5119+98.88, LT.
INSTALL 95' X 15" RCP CLASS III

5119+00.00

Filename: Xsect.dgn

Scale:

No.	Revision	By	Date

Designed by:

HNTB

CONSULTANT PROJECT MANAGER: R. Bruce Munger, P.E.

	By	Date		By	Date
Designed	CJG	02/15	Checked	LZD	02/15
Drawn	MPC	02/15	In Charge of	RAL	02/15

HNTB CORPORATION
340 County Road, Suite 6-C
Westbrook, ME 04092
TEL (207) 774-5155
FAX (207) 228-0909

MAINE TURNPIKE

THE GOLD STAR MEMORIAL HIGHWAY

MTA PROJECT MANAGER: William Yates

WEST GARDINER BARRIER TOLL PLAZA ORT CONVERSION

CROSS SECTIONS STA. 5119+00 TO STA. 5119+50

SHEET NUMBER: XS-15

CONTRACT:2015.11

Date:2/13/2015

STA. 120+50.00 SB ORT ℄
END 2" MILL, SHIM AND PAVE
(CASH LANE OUTSIDE SHOULDER)
BEGIN SHOULDER CONSTRUCTION
BEGIN 2" MILL, SHIM AND PAVE
(CASH LANES)
MATCH EXIST. GRADE

STA. 5120+40.04, RT. TO STA. 5122+19.01, RT.
INSTALL 175' X 18" RCP CLASS III

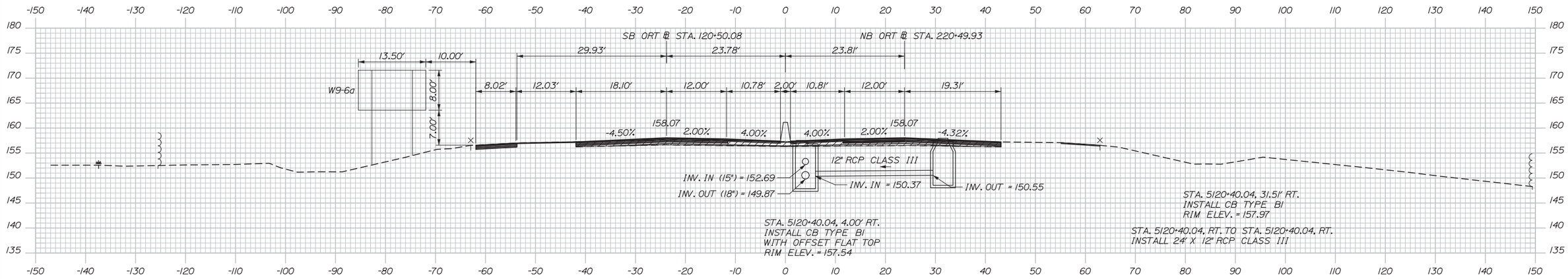

5120+50.00

STA. 5119+98.88, LT. TO STA. 5120+40.04, RT.
INSTALL 38' X 15" RCP CLASS III

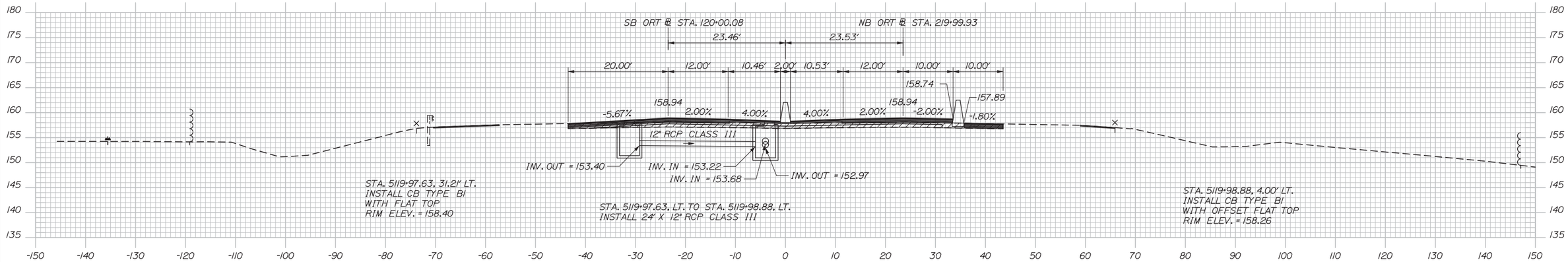

5120+00.00

Filename: Xsect.dgn

Scale:				Designed by: HNTB	HNTB CORPORATION 340 County Road, Suite 6-C Westbrook, ME 04092 TEL (207) 774-5155 FAX (207) 228-0909	MAINE TURNPIKE	THE GOLD STAR MEMORIAL HIGHWAY	WEST GARDINER BARRIER TOLL PLAZA ORT CONVERSION
No.	Revision	By	Date					CROSS SECTIONS STA. 5120+00 TO STA. 5120+50
				CONSULTANT PROJECT MANAGER: R. Bruce Munger, P.E.			MTA PROJECT MANAGER: William Yates	SHEET NUMBER: XS-16
				By Date / By Date				CONTRACT:2015.11
				Designed CJG 02/15 / Checked LZD 02/15				70 OF 118
				Drawn MPC 02/15 / In Charge of RAL 02/15				

Date:2/13/2015

STA. 5121+75.46,
0.19' LT.
EXIST CB
(REMOVE)

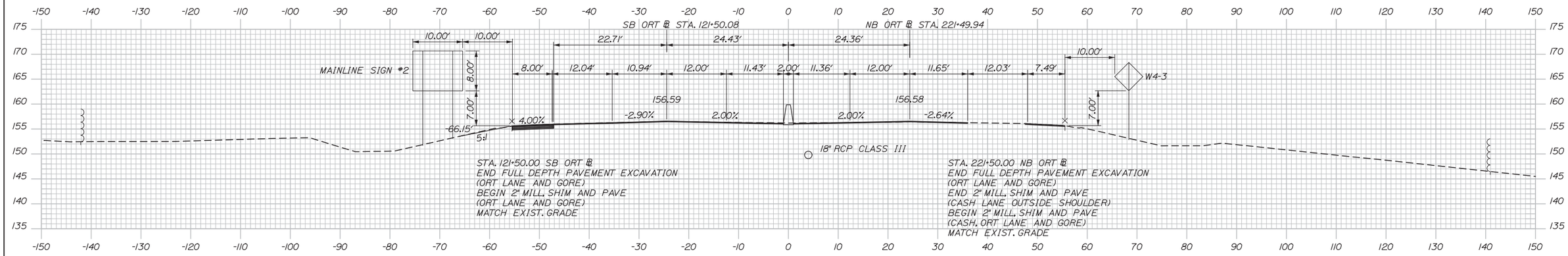

5121+50.00

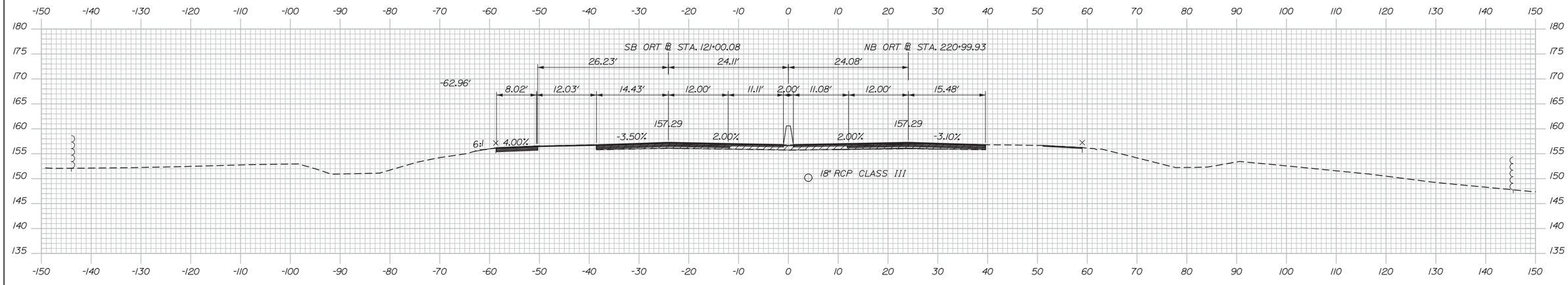

5121+00.00

Scale:

Designed by:

HNTB

No.	Revision	By	Date

CONSULTANT PROJECT MANAGER: R. Bruce Munger, P.E.

	By	Date		By	Date
Designed	CJG	02/15	Checked	LZD	02/15
Drawn	MPC	02/15	In Charge of	RAL	02/15

HNTB CORPORATION
340 County Road, Suite 6-C
Westbrook, ME 04092
TEL (207) 774-5155
FAX (207) 228-0909

MAINE TURNPIKE

THE GOLD STAR MEMORIAL HIGHWAY

MTA PROJECT MANAGER: William Yates

WEST GARDINER BARRIER TOLL PLAZA ORT CONVERSION

CROSS SECTIONS STA. 5121+00 TO STA. 5121+50

SHEET NUMBER: XS-17

CONTRACT:2015.11

Filename: Xsect.dgn

Date:2/13/2015

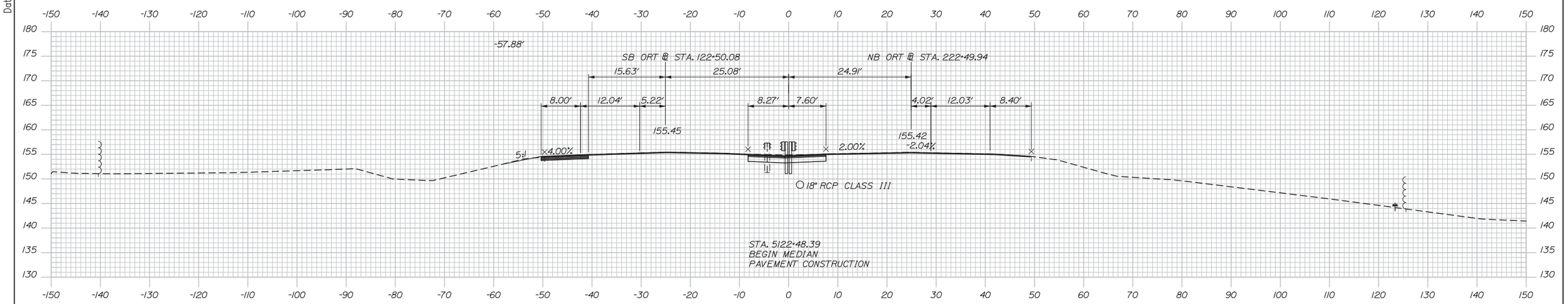

5122+50.00

STA. 5122+19.01, RT. TO STA. 5122+99.35, LT.
INSTALL 77' X 18" RCP CLASS III

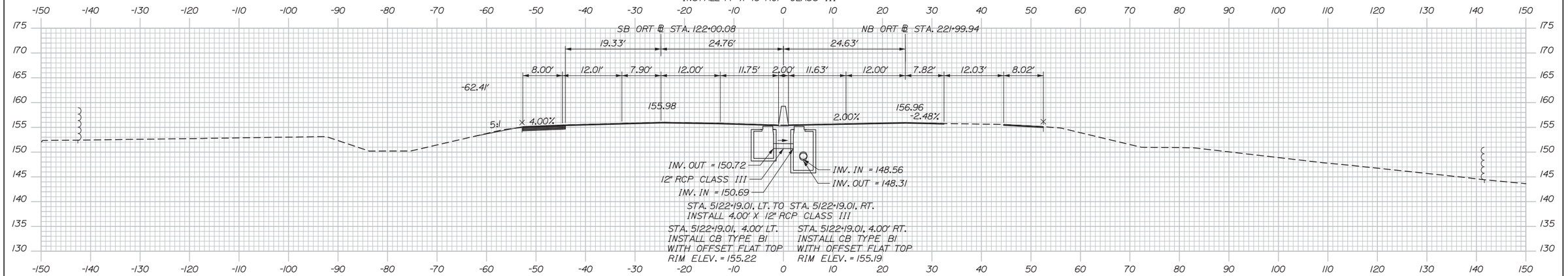

5122+00.00

Filename: Xsect.dgn

Scale:

No.	Revision	By	Date

Designed by: HNTB

CONSULTANT PROJECT MANAGER: R. Bruce Munger, P.E.

	By	Date		By	Date
Designed	CJG	02/15	Checked	LZD	02/15
Drawn	MPC	02/15	In Charge of	RAL	02/15

HNTB CORPORATION
340 County Road, Suite 6-C
Westbrook, ME 04092
TEL (207) 774-5155
FAX (207) 228-0909

MAINE TURNPIKE

THE GOLD STAR MEMORIAL HIGHWAY

MTA PROJECT MANAGER: William Yates

WEST GARDINER BARRIER TOLL PLAZA ORT CONVERSION

CROSS SECTIONS STA. 5122+00 TO STA. 5122+50

SHEET NUMBER: XS-18

CONTRACT:2015.11

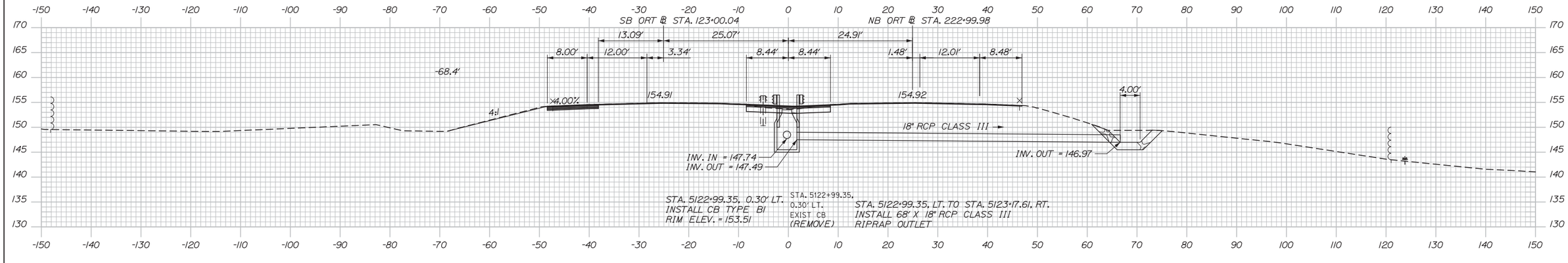

5123+00.00

Filename: Xsect.dgn

Scale:

No.	Revision	By	Date

Designed by:

HNTB

CONSULTANT PROJECT MANAGER: R. Bruce Munger, P.E.

	By	Date		By	Date
Designed	CJG	02/15	Checked	LZD	02/15
Drawn	MPC	02/15	In Charge of	RAL	02/15

HNTB CORPORATION
340 County Road, Suite 6-C
Westbrook, ME 04092
TEL (207) 774-5155
FAX (207) 228-0909

MAINE TURNPIKE

THE GOLD STAR MEMORIAL HIGHWAY

MTA PROJECT MANAGER: William Yates

WEST GARDINER BARRIER TOLL PLAZA ORT CONVERSION

CROSS SECTIONS STA. 5123+00

SHEET NUMBER: XS-19

CONTRACT:2015.11

Date:2/13/2015

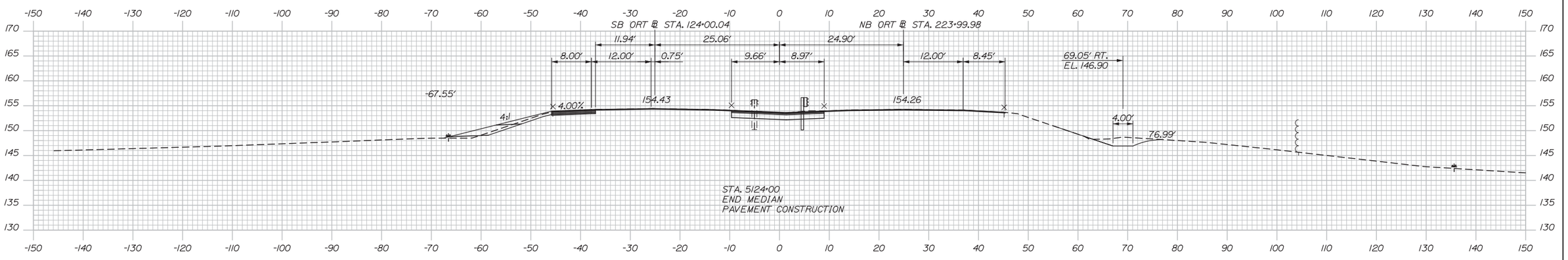

5124+00.00

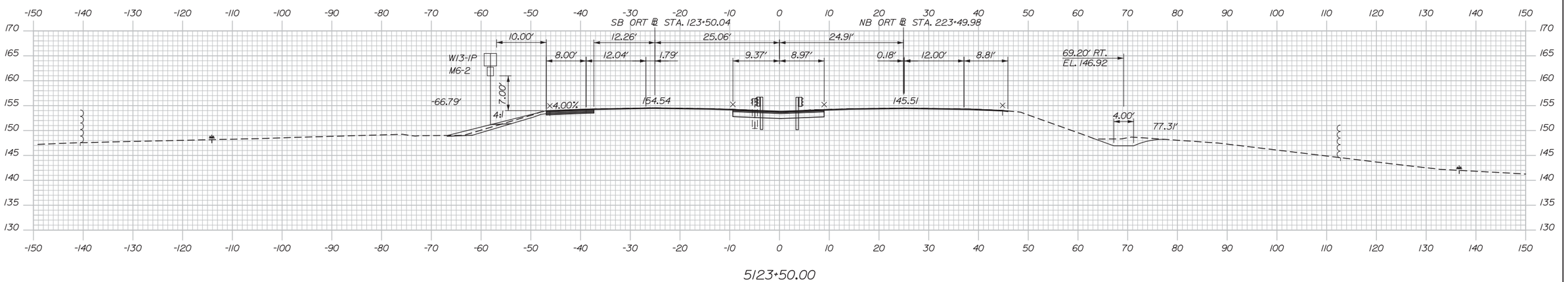

5123+50.00

Filename: Xsect.dgn

Scale:

No.	Revision	By	Date

Designed by: HNTB

CONSULTANT PROJECT MANAGER: R. Bruce Munger, P.E.

	By	Date		By	Date
Designed	CJG	02/15	Checked	LZD	02/15
Drawn	MPC	02/15	In Charge of	RAL	02/15

HNTB CORPORATION
340 County Road, Suite 6-C
Westbrook, ME 04092
TEL (207) 774-5155
FAX (207) 228-0909

MAINE TURNPIKE

THE GOLD STAR MEMORIAL HIGHWAY

MTA PROJECT MANAGER: William Yates

WEST GARDINER BARRIER TOLL PLAZA ORT CONVERSION

CROSS SECTIONS STA. 5123+50 TO STA. 5124+00

SHEET NUMBER: XS-20

CONTRACT:2015.11

Date:2/13/2015

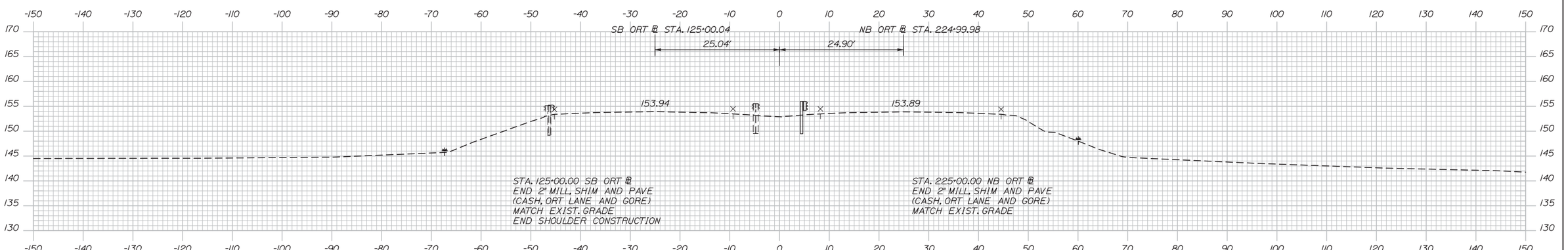

5125+00.00

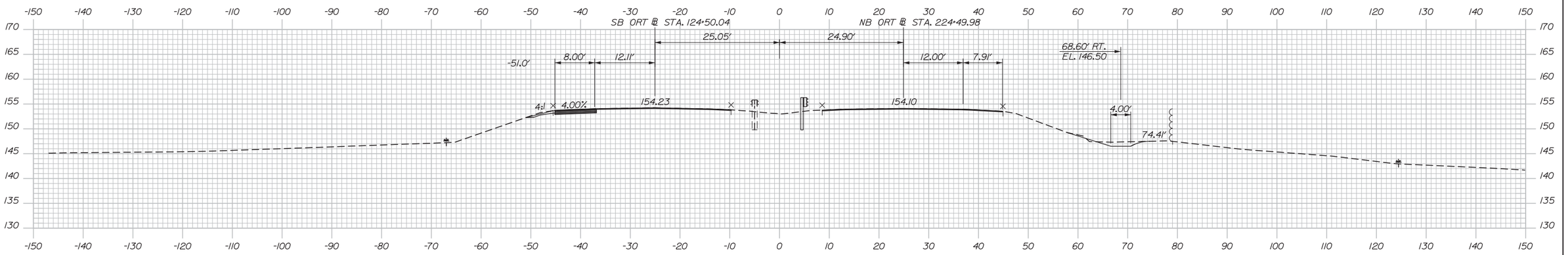

5124+50.00

Filename: Xsect.dgn

Scale:

No.	Revision	By	Date

Designed by: HNTB

CONSULTANT PROJECT MANAGER: R. Bruce Munger, P.E.

	By	Date		By	Date
Designed	CJG	02/15	Checked	LZD	02/15
Drawn	MPC	02/15	In Charge of	RAL	02/15

HNTB CORPORATION
340 County Road, Suite 6-C
Westbrook, ME 04092
TEL (207) 774-5155
FAX (207) 228-0909

MAINE TURNPIKE

THE GOLD STAR MEMORIAL HIGHWAY

MTA PROJECT MANAGER: William Yates

WEST GARDINER BARRIER TOLL PLAZA ORT CONVERSION

CROSS SECTIONS STA. 5124+50 TO STA. 5125+00

SHEET NUMBER: XS-21

CONTRACT:2015.11

Date:2/13/2015

TOLL PLAZA STRUCTURAL GENERAL NOTES:

SPECIFICATIONS

DESIGN

TUNNEL SLAB, STRUCTURAL SLAB AND PAVEMENT SLAB
- AASHTO LRFD BRIDGE DESIGN SPECIFICATIONS, 7TH EDITION (2014)

- AASHTO STANDARD SPECIFICATIONS FOR HIGHWAY BRIDGES (17th EDITION)

- AASHTO STANDARD SPECIFICATIONS FOR STRUCTURAL SUPPORTS FOR HIGHWAY SIGNS, LUMINAIRET, AND TRAFFIC SIGNALS (6th EDITION 2013 WITH REVISIONS)

- AASHTO BRIDGE DESIGN GUIDE SPECIFICATIONS FOR GFRP-REINFORCE CONCRETE BRIDGE DECKS AND TRAFFIC RAILINGS (NOVEMBER 2009)

EXISTING CANOPY MODIFICATIONS
- AISC MANUAL OF STEEL CONSTRUCTION, LRFD METHOD, 13th EDITION
- ASCE 7-10 MINIMUM DESIGN LOADS FOR BUILDINGS AND OTHER STRUCTURES, 3rd PRINTING (2013)

CONSTRUCTION

STATE OF MAINE, DEPARTMENT OF TRANSPORTATION STANDARD SPECIFICATIONS, HIGHWAYS AND BRIDGES, REVISION OF 2002.

STATE OF MAINE, DEPARTMENT OF TRANSPORTATION STANDARD DETAILS FOR HIGHWAYS AND BRIDGES, DECEMBER 2002 WITH UPDATES.

DESIGN LOADING

LIVE LOAD

TUNNEL SLAB, STRUCTURAL SLAB AND PAVEMENT SLAB - MAINEDOT MODIFIED HL-93

EXISTING CANOPY MODIFICATIONS - 20 PSF

WIND

BASIC WIND SPEED (V) = 95 MPH

SNOW / ICE

EXISTING CANOPY MODIFICATIONS - GROUND SNOW LOAD, p_g = 70 PSF (ASCE 7)

MATERIALS

CONCRETE

ALL STRUCTURAL CONCRETE - CLASS AAA

REINFORCING STEEL

ASTM A615 GRADE 60 (EPOXY BARS)

ASTM A884 CLASS A (EPOXY COATED WELDED WIRE FABRIC)

ANCHOR RODS

SHALL MEET THE REQUREMENTS OF ASTM F1554 GRADE 105 FOR SPACE FRAME AND ASTM F1554 GRADE 55 FOR CANOPY MODIFICATIONS. ANCHOR RODS SHALL BE SWEDGED OR THREADED ON THE EMBEDDED PORTION OF THE ROD

GFRP REINFORCING

ASLAN 100 GFRP GLASS FIBER REINFORCED POLYMER (GFRP) REINFORCING BARS AS MANUFACTURED BY HUGHES BROTHERS, INC. OR APPROVED EQUAL

STRUCTURAL STEEL

STRUCTURAL STEEL TUBING SHALL CONFORM TO ASTM A500, GRADE B (f = 46,000 PSI)

ALL OTHER STRUCTURAL STEEL SHALL CONFORM TO ASTM A709, GRADES 36 AND 50 AS SPECIFIED.

BASIC DESIGN STRESSES

CONCRETE

CLASS AAA - f'_c = 4,500 PSI

REINFORCING STEEL

f_y = 60,000 PSI (BARS)

STRUCTURAL STEEL

ASTM A500 - f_y = 46,000 PSI

ASTM A709 GRADE 36 - f_y = 36,000 PSI

ASTM A709 GRADE 50 - f_y = 50,000 PSI

GFRP

#5 BAR - MINIMUM TENSILE STRESS = 95,000 PSI

#6 BAR - MINIMUM TENSILE STRESS = 90,000 PSI

#8 BAR - MINIMUM TENSILE STRESS = 80,000 PSI

ANCHOR RODS

SPACE FRAME: ASTM F1554 GRADE 105 - f_y = 105,00 PSI

CANOPY: ASTM F1554 GRADE 55 - f_y = 55,00 PSI

CONSTRUCTION NOTES:

1. DIMENSIONS, ANGLES, BEARINGS AND ELEVATIONS SHOWN ON THE PLANS HAVE BEEN OBTAINED FROM AVAILABLE PLANS OF THE EXISTING STRUCTURE, LIMITED FIELD INVESTIGATION, AND SURVEY AND MAY NOT ACCURATELY REFLECT ACTUAL FIELD CONDITIONS. ACCORDINGLY, THE CONTRACTOR SHALL BE RESPONSIBLE FOR MAKING FIELD MEASUREMENTS OF ALL EXISTING STRUCTURE COMPONENTS IMPACTED BY THE NEW WORK TO ASSURE CONSISTENCY WITH THE PROPOSED MODIFICATIONS. THE CONTRACTOR SHALL NOTIFY THE RESIDENT OF ANY EXISTING CONDITIONS THAT DO NOT MATCH THE AS-BUILT DRAWINGS OR THESE PLANS PRIOR TO ADVANCING THE WORK SHOP DRAWINGS REQUIRED FOR VARIOUS ITEMS OF WORK SHALL INDICATE THE ACTUAL FIELD MEASUREMENT'S AND SHALL BE SO NOTED.

2. THE CONTRACTOR SHALL TAKE SPECIAL CARE AND PRECAUTION TO ENSURE THAT NO DEBRIS FALLS, SPILLS OR ROLLS ONTO OPEN ROADWAY DURING CONSTRUCTION.

3. ALL CONSTRUCTION SIGNING AND TRAFFIC CONTROL MEASURES SHALL BE IN PLACE BEFORE CONSTRUCTION WORK BEGINS.

4. WHERE DRILLING AND ANCHORING OF REINFORCING STEEL IS SPECIFIED THE CONTRACTOR SHALL USE A MATERIAL LISTED ON THE MAINEDOT PREQUALIFIED LIST OF CHEMICAL ANCHORING MATERIALS. THE DEPTH OF EMBEDMENT SHALL BE SUFFICIENT TO DEVELOP 125% OF THE YIELD STRENGTH OF THE BAR, BUT SHALL BE NO LESS THAN THE MINIMUM DEPTH OF EMBEDMENT WHEN SPECIFIED. WHERE MINIMUM EMBEDMENT DEPTHS HAVE NOT BEEN SPECIFIED BAR LENGTHS HAVE BEEN DEVELOPED BASED ON AN ASSUMED EMBEDMENT DEPTH 12" FOR ALL BAR SIZES. THE CONTRACTOR SHALL VERIFY THE REQUIRED DEPTH OF EMBEDMENT AND ADJUST THE REQUIRED BAR LENGTHS AS NEEDED.

5. PREMOLDED JOINT FILLER SHALL CONFORM TO ASTM DESIGNATION D1752, TYPE I OR ASTM D5249, TYPE 2. PREMOLDED JOINT FILLER SHALL BE A NON STAINING, NON BLEEDING TYPE. PRODUCTS SUCH AS 'CERAMAR', MANUFACTURED BY W. R. MEADOWS, OR AN APPROVED EQUAL WILL BE ACCEPTABLE. CORK IS NOT AN ACCEPTABLE JOINT FILLER MATERIAL.

6. SELF LEVELING ELASTOMERIC SEALANT SHALL BE SIKA FLEX 1CSL OR AN APPROVED EQUAL.

7. PREMOLDED JOINT FILLER AND SELF LEVELING ELASTOMERIC SEALANT SHALL BE INCIDENTAL TO ITEM 502.262, STRUCTURAL CONCRETE ROADWAY AND ISLAND SLAB ON GRADE.

Filename: 076_S_GeneralNotes.dgn

Scale:

No.	Revision	By	Date

Designed by: HNTB

CONSULTANT PROJECT MANAGER: R. Bruce Munger, P.E.

	By	Date		By	Date
Designed	GLS	02/15	Checked	AJF	02/15
Drawn	MPC	02/15	In Charge of	RAL	02/15

HNTB CORPORATION
340 County Road, Suite 6-C
Westbrook, ME 04092
TEL (207) 774-5155
FAX (207) 228-0909

MAINE TURNPIKE

THE GOLD STAR MEMORIAL HIGHWAY

MTA PROJECT MANAGER: William Yates

WEST GARDINER BARRIER TOLL PLAZA
ORT CONVERSION

STRUCTURAL GENERAL NOTES

SHEET NUMBER: S-01

CONTRACT:2015.11

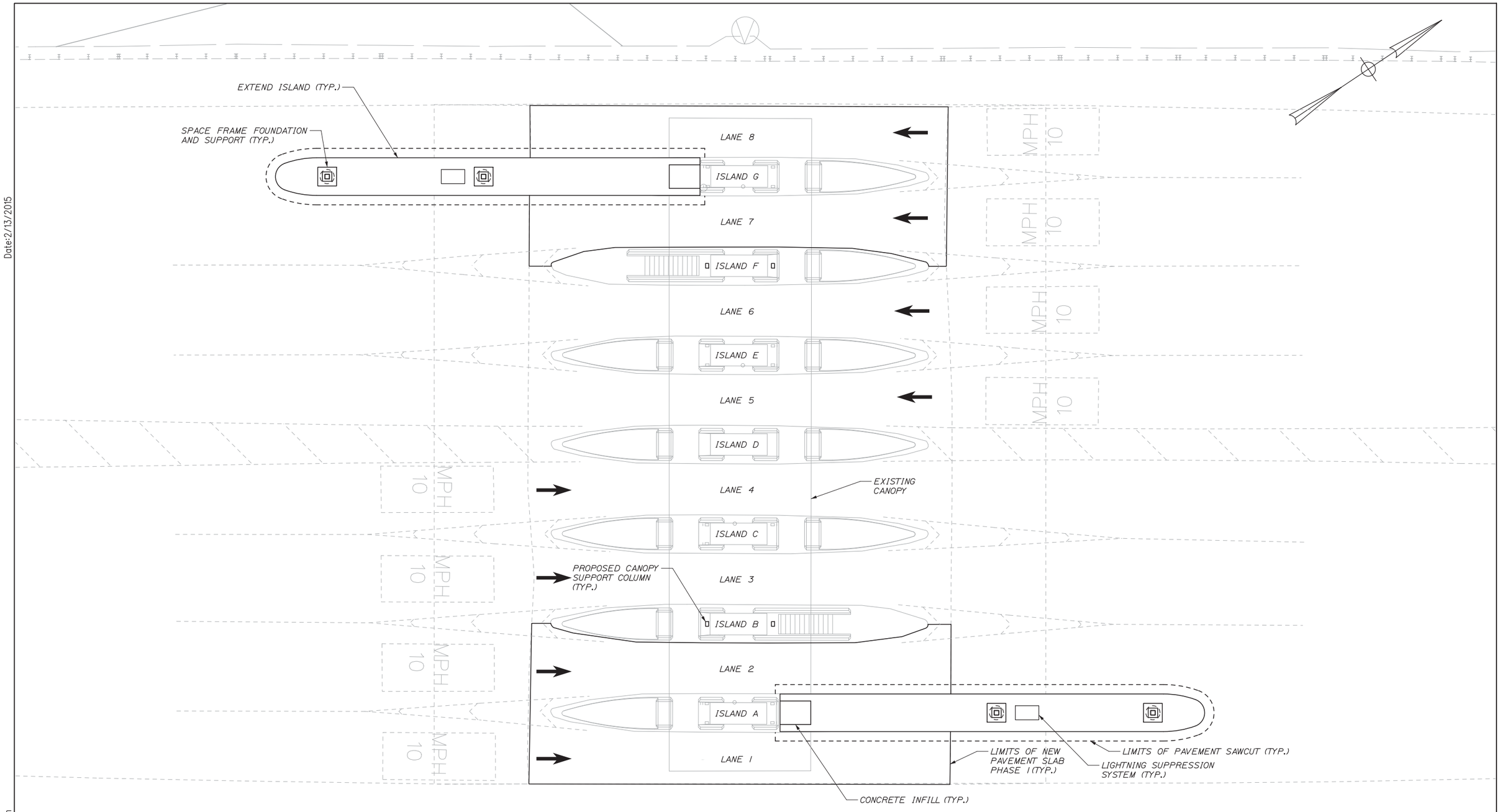

Date:2/13/2015

Filename: 077_S_GeneralPlan - Phase 1.dgn

Scale: 10 0 10 20
PLAN SCALE

No.	Revision	By	Date

Designed by: HNTB

CONSULTANT PROJECT MANAGER: R. Bruce Munger, P.E.

	By	Date		By	Date
Designed	GLS	02/15	Checked	AJF	02/15
Drawn	MPC	02/15	In Charge of	RAL	02/15

HNTB CORPORATION
340 County Road, Suite 6-C
Westbrook, ME 04092
TEL (207) 774-5155
FAX (207) 228-0909

MAINE TURNPIKE

THE GOLD STAR MEMORIAL HIGHWAY

MTA PROJECT MANAGER: William Yates

WEST GARDINER BARRIER TOLL PLAZA ORT CONVERSION

STRUCTURAL GENERAL PLAN - PHASE 1

SHEET NUMBER: S-02

CONTRACT:2015.11

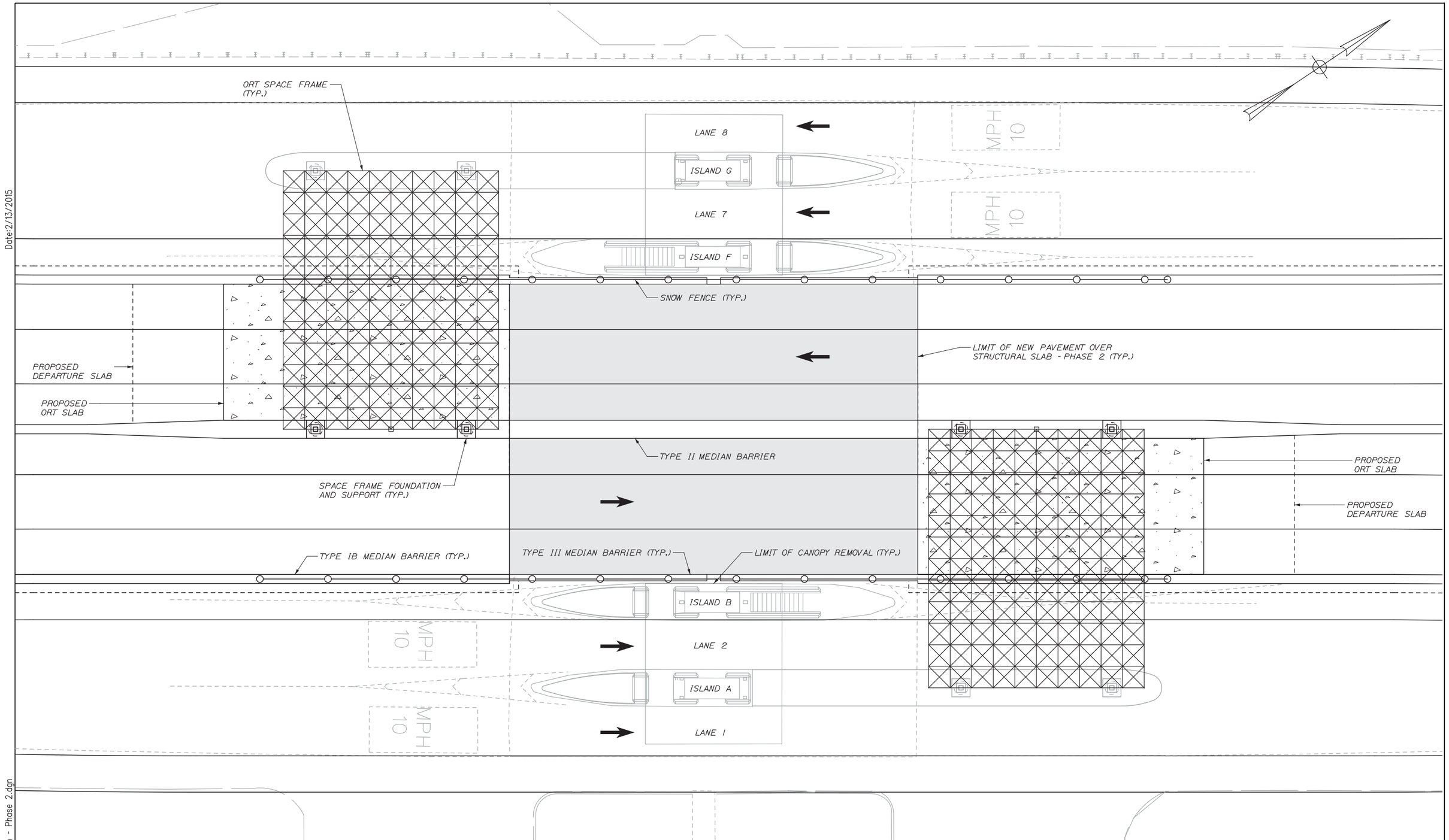

Date:2/13/2015

Filename: 078_S_GeneralPlan - Phase 2.dgn

Scale:

No.	Revision	By	Date

Designed by: HNTB

CONSULTANT PROJECT MANAGER: R. Bruce Munger, P.E.

	By	Date		By	Date
Designed	GLS	02/15	Checked	AJF	02/15
Drawn	MPC	02/15	In Charge of	RAL	02/15

HNTB CORPORATION
340 County Road, Suite 6-C
Westbrook, ME 04092
TEL (207) 774-5155
FAX (207) 228-0909

MAINE TURNPIKE

THE GOLD STAR MEMORIAL HIGHWAY

MTA PROJECT MANAGER: William Yates

WEST GARDINER BARRIER TOLL PLAZA ORT CONVERSION

STRUCTURAL GENERAL PLAN - PHASE 2

SHEET NUMBER: S-03

CONTRACT:2015.11

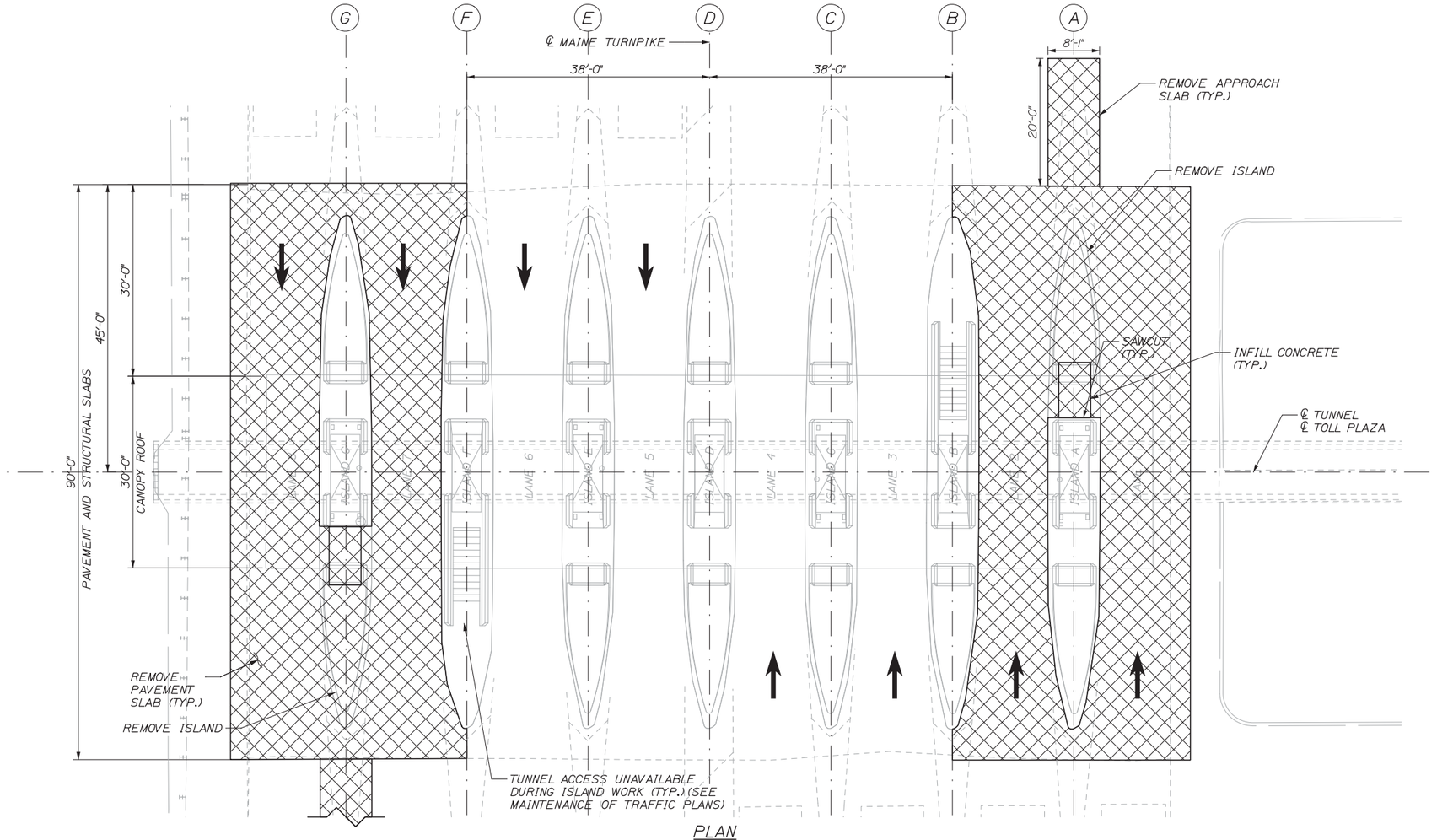

PLAN
SCALE: 1" = 10'-0"

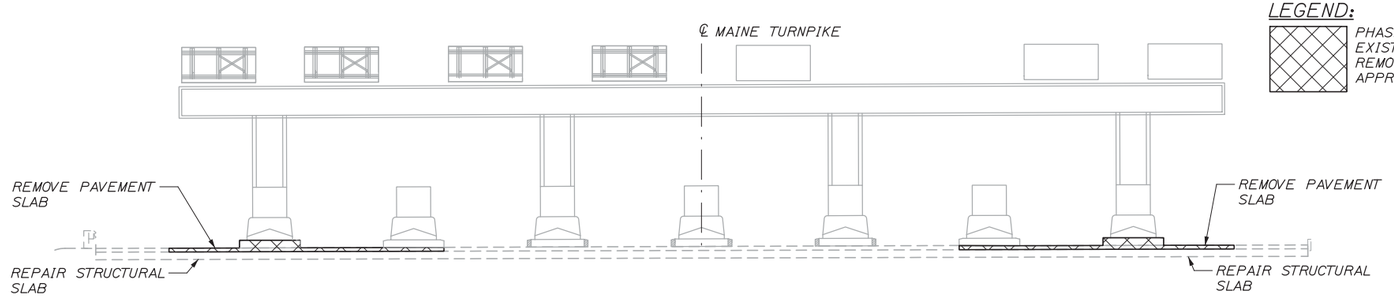

ELEVATION
SCALE: 1" = 10'-0"

NOTES:

1. SEE GENERAL NOTES FOR ITEMS TO SALVAGE.
2. BEFORE BEGINNING PLAZA DEMOLITION THE CONTRACTOR SHALL SUBMIT A DEMOLITION PLAN TO THE RESIDENT FOR APPROVAL.
3. REMOVAL OF LOOPS, CONDUIT, AND ASSOCIATED WIRING IN EXISTING CONCRETE SHALL BE INCIDENTAL TO ITEM 202.17, REMOVING EXISTING STRUCTURAL CONCRETE.

LEGEND:

PHASE I DEMOLITION - REMOVE EXISTING PAVEMENT SLAB, PARTIALLY REMOVE ISLAND, PAVEMENT SLABS, AND APPROACH SLABS AT ISLAND A AND G.

Date:2/13/2015

Filename: 079_S_Demolition Plan - Phase 1.dgn

Scale: AS NOTED

No.	Revision	By	Date

Designed by: HNTB

CONSULTANT PROJECT MANAGER: R. Bruce Munger, P.E.

	By	Date		By	Date
Designed	GLS	02/15	Checked	AJF	02/15
Drawn	MPC	02/15	In Charge of	RAL	02/15

HNTB CORPORATION
340 County Road, Suite 6-C
Westbrook, ME 04092
TEL (207) 774-5155
FAX (207) 228-0909

MAINE TURNPIKE

THE GOLD STAR MEMORIAL HIGHWAY

MTA PROJECT MANAGER: William Yates

WEST GARDINER BARRIER TOLL PLAZA
ORT CONVERSION

STRUCTURAL DEMOLITION PLAN - PHASE 1

SHEET NUMBER: S-04

CONTRACT:2015.11

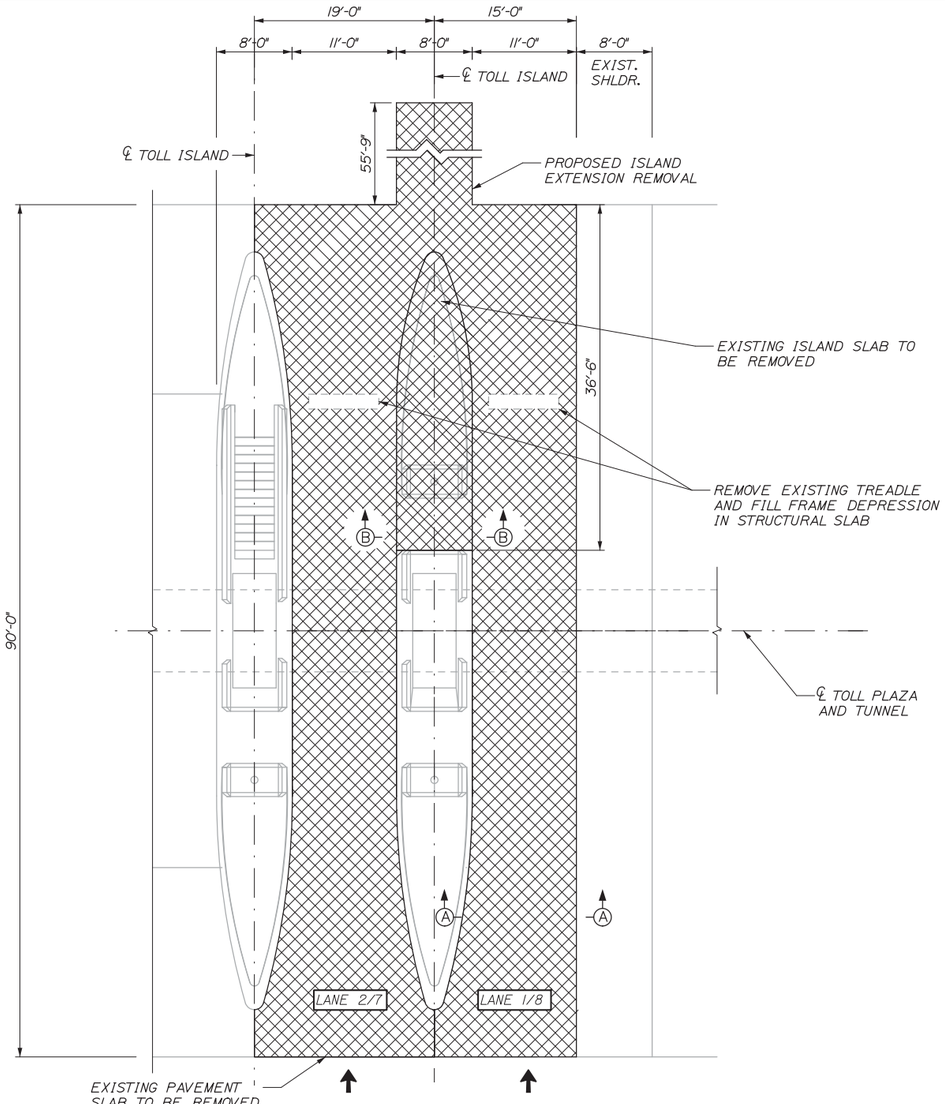

PLAN
SCALE: 1/8" = 1'-0"

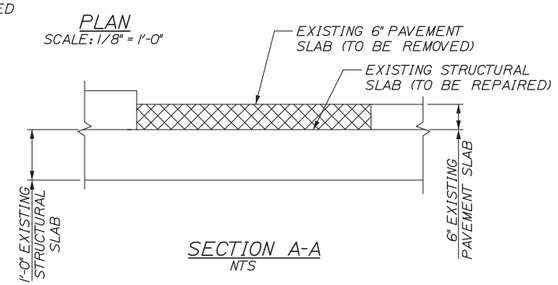

SECTION A-A
NTS

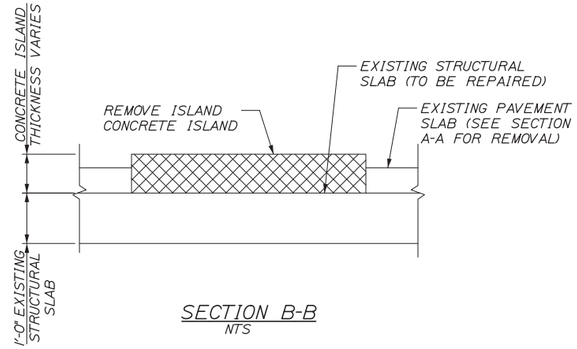

SECTION B-B
NTS

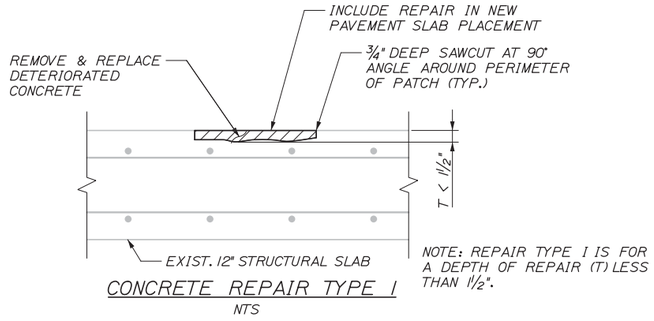

CONCRETE REPAIR TYPE I
NTS

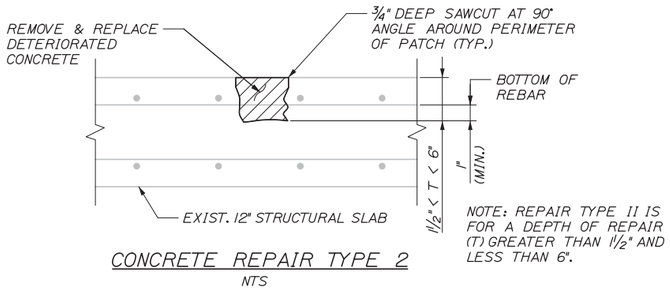

CONCRETE REPAIR TYPE 2
NTS

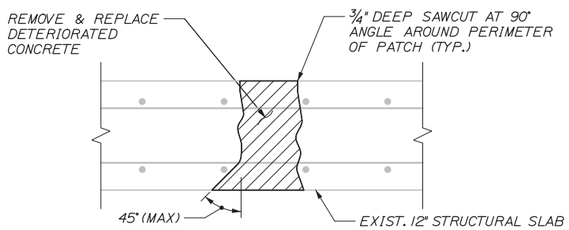

CONCRETE REPAIR TYPE 3
NTS

LEGEND

LIMIT OF EXISTING CONCRETE REMOVAL

GENERAL NOTES:

1. PROVIDE REINFORCEMENT BARS CONFORMING TO THE REQUIREMENTS OF ASTM A615M, A616M, AND A706M.
2. ALL STEEL REBAR SHALL BE EPOXY COATED. REMOVE AND REPLACE IN KIND ALL PORTIONS OF DAMAGED OR HEAVILY CORRODED REINFORCEMENT BARS BY SATISFACTORILY SPLICING TO THE REMAINING REINFORCEMENT BARS.
3. ANY OR ALL CONCRETE REPAIR TYPES MAY BE REQUIRED WITHIN ANY DEFECT.
4. REPAIRS SHALL BE IN ACCORDANCE WITH SPECIAL PROVISION 518.
5. REMOVE ALL LOOSE AND DELAMINATED CONCRETE TO PROVIDE A SOUND BOND BETWEEN EXISTING CONCRETE AND REPAIR MATERIALS. SQUARE OFF LIMITS OF DETERIORATED CONCRETE WITH A 3/4" DEEP SAWCUT.
6. CONTRACTOR SHALL REPAIR AREAS OF CONCRETE SLAB DETERIORATION AS DIRECTED BY THE RESIDENT. LOCATIONS OF SLAB REPAIRS ARE UNDETERMINED. RESIDENT SHALL IDENTIFY AND MARK AREAS FOR SLAB REPAIR AFTER THE WEARING SURFACE HAS BEEN REMOVED.
7. REINFORCING STEEL SCHEDULES FOR THE STRUCTURAL SLAB REPAIR WILL BE THE RESPONSIBILITY OF THE CONTRACTOR. REFER TO SUBSECTION 503.03 OF THE STANDARD SPECIFICATIONS FOR MORE INFORMATION. PAYMENT FOR ALL WORK ASSOCIATED WITH DEVELOPING REINFORCING STEEL SCHEDULES WILL BE CONSIDERED INCIDENTAL TO ITEMS 503.14 AND 503.15.
8. PROTECTIVE COATING FOR CONCRETE SURFACES SHALL BE APPLIED TO ALL EXPOSED SURFACES OF CONCRETE CURBS AND CONCRETE WEARING SURFACES.
9. ANY DAMAGE TO EXISTING CONCRETE OR REINFORCING STEEL RESULTING FROM THE WORK PERFORMED, SHALL BE REPAIRED OR REPLACED BY A METHOD APPROVED BY THE RESIDENT AT NO COST TO THE AUTHORITY.
10. ALL EXISTING MATERIALS WHICH ARE REMOVED FROM THE WORK AREA SHALL BE REMOVED FROM THE SITE AND PROPERLY DISPOSED OF BY THE CONTRACTOR IN A MANNER IN ACCORDANCE WITH THE MAINE DEPARTMENT OF ENVIRONMENTAL PROTECTION SOLID WASTE REGULATIONS. THESE EXISTING MATERIALS INCLUDE, BUT ARE NOT LIMITED TO, CONCRETE, METAL CASING, REINFORCEMENT STEEL, SILT AND DEBRIS ON OR ATTACHED TO THE STRUCTURE WITHIN THE WORK AREAS. THE COST OF REMOVAL AND DISPOSAL SHALL BE INCIDENTAL TO THE COST OF THE WORK ITEMS FOR WHICH THESE REMOVALS ARE REQUIRED.
11. REINFORCING STEEL SHALL HAVE A 2 1/2" MINIMUM COVER UNLESS OTHERWISE NOTED.
12. COPIES OF THE AS BUILT PLANS ARE ON FILE AT THE MAINE TURNPIKE AUTHORITY. THE COMPLETENESS AND ACCURACY OF THESE PLANS ARE NOT GUARANTEED.
13. WHERE DRILLING AND ANCHORING OF REINFORCING STEEL IS SPECIFIED THE CONTRACTOR SHALL USE A MATERIAL LISTED ON THE MAINEDOT PREQUALIFIED LIST OF CHEMICAL ANCHORING MATERIALS. THE DEPTH OF EMBEDMENT SHALL BE SUFFICIENT TO DEVELOP 125% OF THE YIELD STRENGTH OF THE BAR, BUT SHALL BE NO LESS THAN THE MINIMUM DEPTH OF EMBEDMENT WHEN SPECIFIED. WHERE MINIMUM EMBEDMENT DEPTHS HAVE NOT BEEN SPECIFIED BAR LENGTHS HAVE BEEN DEVELOPED BASED ON AN ASSUMED EMBEDMENT DEPTH OF 9" FOR #5 BARS AND 11" FOR #6 BARS. THE CONTRACTOR SHALL VERIFY THE REQUIRED DEPTH OF EMBEDMENT AND ADJUST THE REQUIRED BAR LENGTHS AS NEEDED.
14. REMOVAL OF LOOP CONDUIT AND ASSOCIATED WIRING IN EXISTING CONCRETE SHALL BE INCIDENTAL TO ITEM 202.17: REMOVING EXISTING STRUCTURAL CONCRETE.
15. CONTRACTOR SHALL USE ITEM NO. 502.262 FOR STRUCTURAL SLAB REPAIR WITH AREAS GREATER THAN 50 S.F. (CONTINUOUS) OR AS DIRECTED BY THE RESIDENT ENGINEER.
16. ALL STRUCTURAL CONCRETE FOR ROADWAY SLAB (ITEM 502.262) SHALL CONTAIN STRUCTURAL FIBER REINFORCING AT 5LBS PER CY.
17. TREADLE DRAIN SHALL BE REMOVED TO BOTTOM OF STRUCTURAL SLAB AND CAPPED. TREADLE DRAIN BLOCK OUTS INTO STRUCTURAL SLAB SHALL BE REPAIRED WITH CONCRETE REPAIR TYPE 3 (ITEM 518.83).

Date:2/13/2015

Filename: 080_CashLaneDemo1,2&7,8.dgn

Scale:

No.	Revision	By	Date

Designed by: HNTB

CONSULTANT PROJECT MANAGER: R. Bruce Munger, P.E.

	By	Date		By	Date
Designed	GLS	02/15	Checked	AJF	02/15
Drawn	MPC	02/15	In Charge of	RAL	02/15

HNTB CORPORATION
340 County Road, Suite 6-C
Westbrook, ME 04092
TEL (207) 774-5155
FAX (207) 228-0909

MAINE TURNPIKE

THE GOLD STAR MEMORIAL HIGHWAY

MTA PROJECT MANAGER: William Yates

WEST GARDINER BARRIER TOLL PLAZA ORT CONVERSION

PAVEMENT SLAB DEMO & STRUCTURAL SLAB REPAIRS - LANES 1-2 & 7-8

SHEET NUMBER: S-05

CONTRACT:2015.11

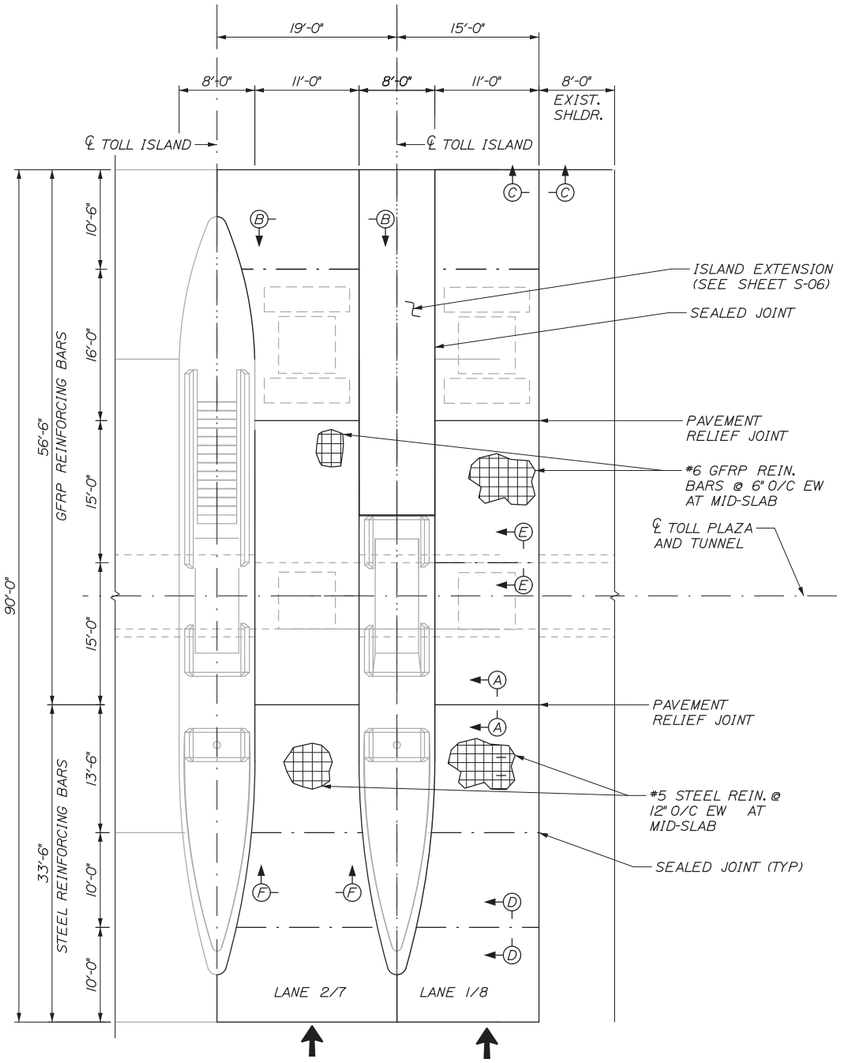

PLAN
SCALE: 1/8" = 1'-0"

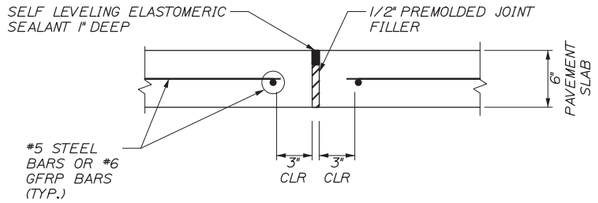

SECTION A-A
SCALE: 1 1/2" = 1'-0"

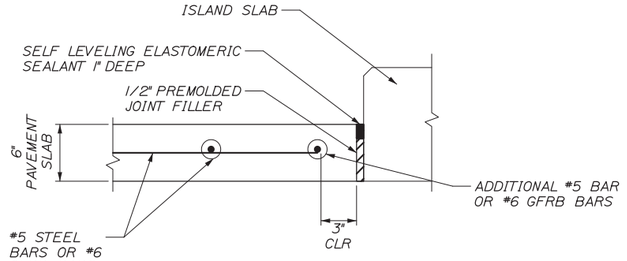

SECTION B-B
SCALE: 1 1/2" = 1'-0"

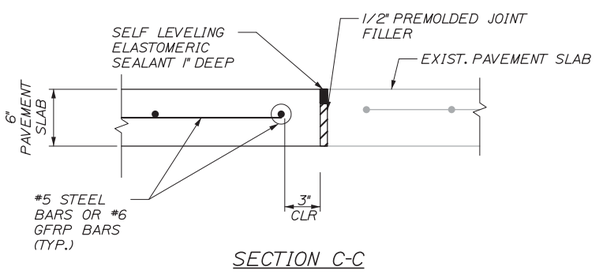

SECTION C-C

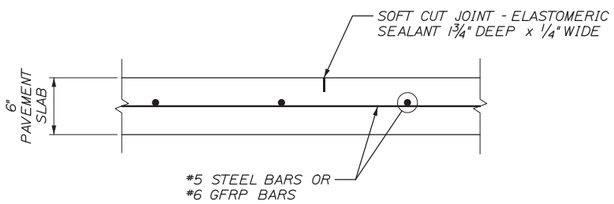

SECTION D-D
SCALE: 1 1/2" = 1'-0"

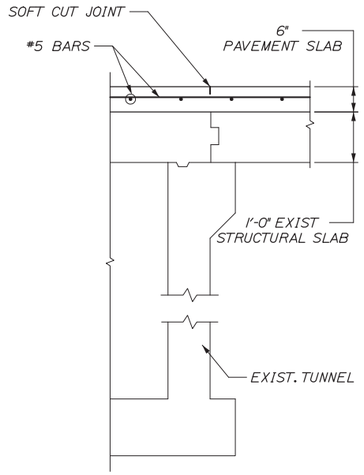

SECTION E-E
3/4" = 1'-0"

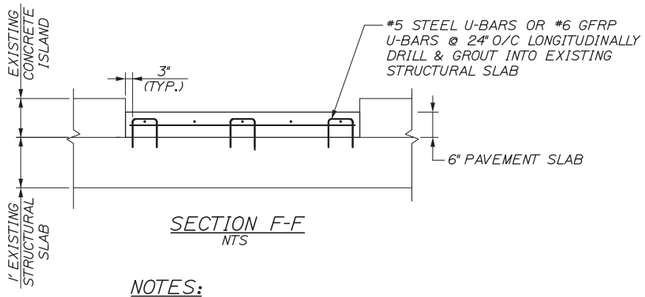

SECTION F-F
NTS

NOTES:

1. PREFORMED JOINT MATERIAL SHALL CONFORM TO THE CROSS SECTION OF THE PAVEMENT AND BE FURNISHED IN STRIPS EQUAL TO THE PAVEMENT WIDTH.

2. CONSTRUCT ALL TRANSVERSE JOINTS PERPENDICULAR TO THE CENTERLINE.

3. NO HOLE SHALL BE DRILLED CLOSER THAN 3" FROM THE EXISTING EDGE OF CONCRETE.

4. PREMOLDED JOINT FILLER SHALL CONFORM TO ASTM DESIGNATION D1752, TYPE I OR ASTM D5249, TYPE 2. PREMOLDED JOINT FILLER SHALL BE A NON STAINING, NON BLEEDING TYPE. PRODUCTS SUCH AS 'CERAMAR', MANUFACTURED BY W. R. MEADOWS, OR AN APPROVED EQUAL WILL BE ACCEPTABLE. CORK IS NOT AN ACCEPTABLE JOINT FILLER MATERIAL.

5. SELF LEVELING ELASTOMERIC SEALANT SHALL BE SIKA FLEX 1CSC OR AN APPROVED EQUAL.

6. PREMOLDED JOINT FILLER AND SELF LEVELING ELASTOMERIC SEALANT SHALL BE INCIDENTAL TO ITEM 502.262, STRUCTURAL CONCRETE ROADWAY SLAB.

7. SEE APP. I IN SPECIFICATIONS FOR PAVEMENT SLAB REBAR SCHEDULE.

Date:2/13/2015

Filename: 081_CashLaneRehab1,2&7,8.dgn

Scale:

No.	Revision	By	Date

Designed by: HNTB

CONSULTANT PROJECT MANAGER: R. Bruce Munger, P.E.

	By	Date		By	Date
Designed	GLS	02/15	Checked	ALF	02/15
Drawn	MPC	02/15	In Charge of	RAL	02/15

HNTB CORPORATION
340 County Road, Suite 6-C
Westbrook, ME 04092
TEL (207) 774-5155
FAX (207) 228-0909

MAINE TURNPIKE

THE GOLD STAR MEMORIAL HIGHWAY

MTA PROJECT MANAGER: William Yates

WEST GARDINER BARRIER TOLL PLAZA ORT CONVERSION

PAVEMENT SLAB DETAILS LANES 1-2 & 7-8

SHEET NUMBER: S-06

CONTRACT:2015.11

MARK	SIZE	NO.	LENGTH	TYPE	A	B	C	REMARKS
ISLAND A AND ISLAND G								
B501	5	2	6'-5"	I7	3'-5"	1'-6"	1'-6"	
B502	5	2	7'-10"	I7	4'-10"	1'-6"	1'-6"	
B503	5	2	8'-7"	I7	5'-7"	1'-6"	1'-6"	
B504	5	2	9'-2"	I7	6'-2"	1'-6"	1'-6"	
B505	5	2	9'-7"	I7	6'-7"	1'-6"	1'-6"	
B506	5	2	10'-0"	I7	7'-0"	1'-6"	1'-6"	
B507	5	2	10'-2"	I7	7'-2"	1'-6"	1'-6"	
B508	5	2	10'-4"	I7	7'-4"	1'-6"	1'-6"	
B509	5	2	10'-5"	I7	7'-5"	1'-6"	1'-6"	
B510	5	162	10'-5"	I7	7'-5"	1'-6"	1'-6"	
B511	5	16	3'-6"	STR				
B512	5	4	43'-0"	BENT				
B513	5	6	44'-10"	STR				
B514	5	4	51'-6"	STR				
B515	5	4	52'-10"	STR				
B516	5	4	53'-3"	STR				
B517	5	16	38'-6"	STR				
B701	7	2	5'-5"	I7	3'-5"	1'-0"	1'-0"	
B702	7	2	6'-10"	I7	4'-10"	1'-0"	1'-0"	
B703	7	2	7'-7"	I7	5'-7"	1'-0"	1'-0"	
B704	7	2	8'-2"	I7	6'-2"	1'-0"	1'-0"	
B705	7	2	8'-7"	I7	6'-7"	1'-0"	1'-0"	
B706	7	2	9'-0"	I7	7'-0"	1'-0"	1'-0"	
B707	7	2	9'-2"	I7	7'-2"	1'-0"	1'-0"	
B708	7	2	9'-4"	I7	7'-4"	1'-0"	1'-0"	
B709	7	2	9'-5"	I7	7'-5"	1'-0"	1'-0"	
B710	7	88	9'-5"	I7	7'-5"	1'-0"	1'-0"	
B711	7	16	4'-0"	STR				
B712	7	2	43'-0"	BENT				
B713	7	4	44'-10"	STR				
B714	7	4	51'-6"	STR				
B715	7	4	52'-10"	STR				
B716	7	4	53'-3"	STR				

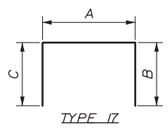

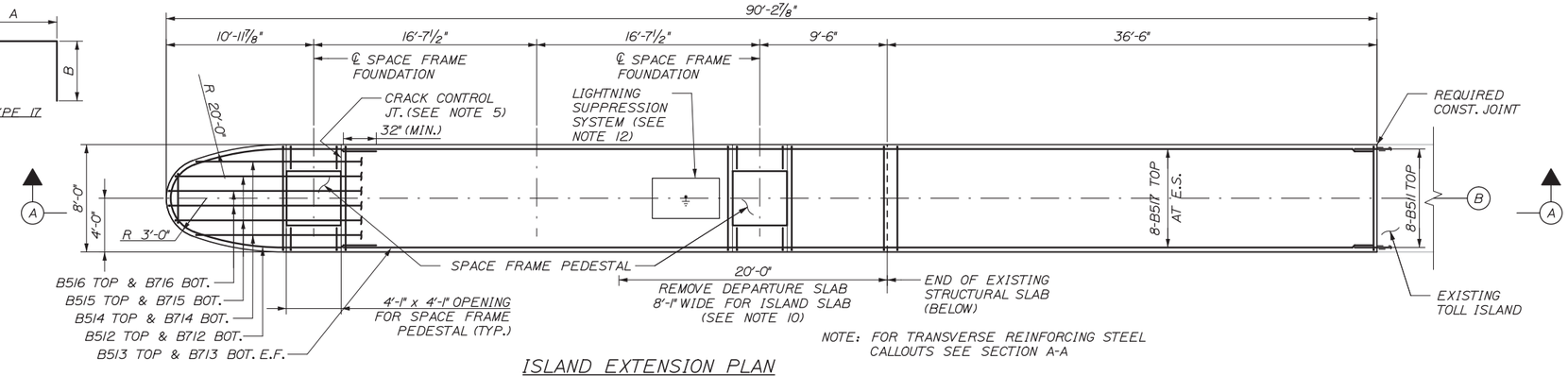

ISLAND EXTENSION PLAN

3/16" = I'-0"

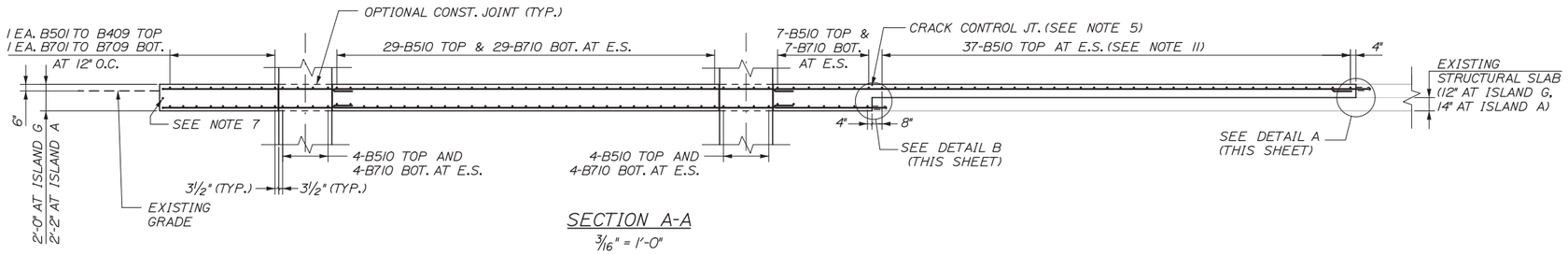

SECTION A-A

3/16" = I'-0"

NOTES:

1. ALL REINFORCING STEEL SHALL BE EPOXY COATED.
2. PROTECTIVE COATING FOR CONCRETE SURFACES SHALL BE APPLIED TO ALL EXPOSED SURFACES OF CONCRETE CURBS, ISLANDS AND CONCRETE WEARING SURFACES.
3. CONCRETE COVER ON REINFORCING STEEL SHALL BE 2 1/2" MIN. UNLESS NOTED OTHERWISE.
4. CHAMFER ALL EXPOSED CONCRETE EDGES 3/4" UNLESS NOTED OTHERWISE.
5. AFTER CONCRETE HAS BEEN PLACED AND ALLOWED TO REACH INITIAL SET THE CONTRACTOR SHALL SAWCUT THE TRANSVERSE JOINTS. SAWCUTTING OF THE CONCRETE SHALL BE COMPLETED AS SOON AS PRACTICAL BUT WITHIN 8 HOURS OF THE CONCRETE PLACEMENT. SAWCUTS SHALL BE I" DEEP AND 1/2" WIDE AND SHALL BE FILLED WITH A NON-SAG ELASTOMERIC SEALANT AFTER THE CONCRETE HAS CURED.
6. MALE COUPLER ON BAR B413 SHALL BE INCIDENTAL TO RELATED CONTRACT ITEMS.
7. TWO ADDITIONAL B512 AND B513 BARS HAVE BEEN INCLUDED IN THE CONTRACT AND SHALL BE PLACED ALONG THE PERIMETER OF ISLAND A AND G. THE BARS SHALL BE LOCATED AT THE MIDHEIGHT OF THE ISLAND.
8. CONTRACTOR MAY USE MECHANICAL COUPLER AT ISLAND CONSTRUCTION JOINT. ANY ADDITIONAL COSTS BE CONSIDERED INCIDENTAL TO REBAR ITEM NO. 503.14.
9. SEE ELECTRICAL SHEET E-10 FOR CONDUCT PATHS.
10. PAVEMENT OVERLAY ON THE DEPARTURE SLAB TO BE CUT AN ADDITIONAL 2'-0" WIDE ON BOTH SIDES OF THE ISLAND.
11. THE 37-B510 STIRRUPS SHALL BE DOWELED INTO EXISTING STRUCTURAL SLAB.
12. THE CONTRACTOR SHALL FIELD CUT REINFORCEMENT AS DIRECTED BY RESIDENT TO CLEAR LIGHTNING SUPPRESSION SYSTEM JUNCTION BOXES. SEE ELECTRICAL DRAWINGS FOR ADDITIONAL INFORMATION ON LIGHTNING SUPPRESSION SYSTEM.

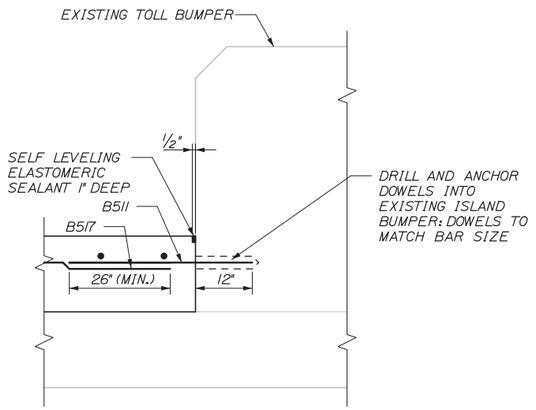

DETAIL A

I" = I'-0"

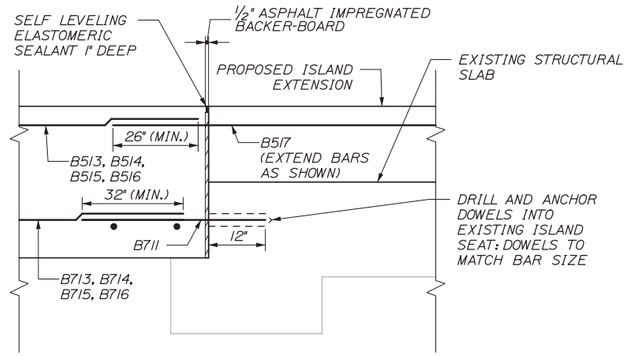

DETAIL B

I" = I'-0"

Date:2/13/2015

Date:2/13/2015

Filename: 082_S_IslandExtensionDetails.dgn

Scale: AS NOTED

No.	Revision	By	Date

Designed by: HNTB

CONSULTANT PROJECT MANAGER: R. Bruce Munger, P.E.

	By	Date		By	Date
Designed	GLS	02/15	Checked	AJF	02/15
Drawn	MPC	02/15	In Charge of	RAL	02/15

HNTB CORPORATION
340 County Road, Suite 6-C
Westbrook, ME 04092
TEL (207) 774-5155
FAX (207) 228-0909

MAINE TURNPIKE

THE GOLD STAR MEMORIAL HIGHWAY

MTA PROJECT MANAGER: William Yates

WEST GARDINER BARRIER TOLL PLAZA ORT CONVERSION

ISLAND EXTENSION DETAILS

SHEET NUMBER: S-07

CONTRACT:2015.11

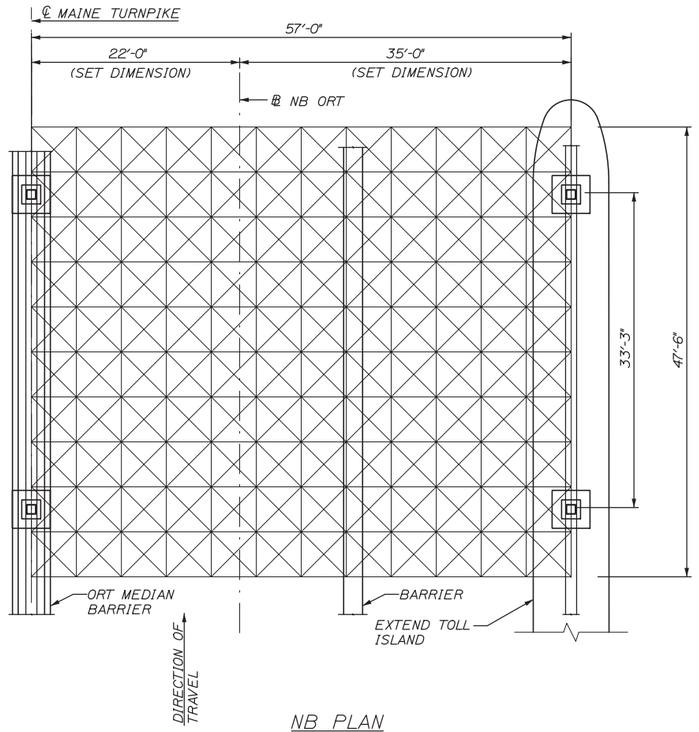

NB PLAN
(SB SIMILAR)
(BARRIER FENCE NOT SHOWN FOR CLARITY)
SCALE: 1/8"=1'-0"

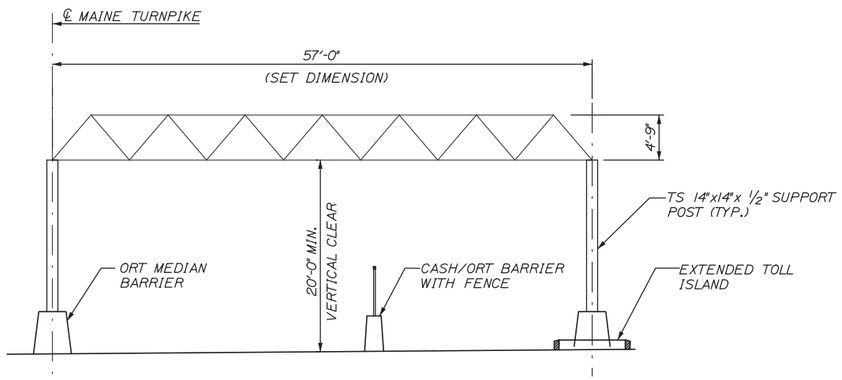

NB ELEVATION
(SB SIMILAR)
SCALE: 1/8"=1'-0"

SPACE FRAME NOTES:

ALL DESIGN AND DETAILS OF CONSTRUCTION SHALL CONFORM TO THE APPLICABLE REQUIREMENTS OF THE FOLLOWING:

A. 2013 AASHTO STANDARD SPECIFICATIONS FOR STRUCTURAL SUPPORTS FOR HIGHWAY SIGNS, LUMINAIRES AND TRAFFIC SIGNALS, WITH 2015 INTERIMS.

B. 2015 AASHTO LRFD BRIDGE CONSTRUCTION SPECIFICATIONS, 4th EDITION.

WIND LOAD:

A. WIND LOAD:
DESIGN WIND SPEED, V = 95 MPH
IMPORTANCE FACTOR, Ip = 1.0
B. A PROVISIONAL AREA FOR SIGN PANELS OF 4' HIGH x 57' LONG AT THE ON-COMING TRAFFIC END OF THE SPACE FRAME.

ICE LOAD:

A. ICE LOAD: 3 PSF APPLIED VERTICALLY ON FULL CIRCUMFERENCE OF ALL MEMBERS AND VERTICAL FACES OF SIGN PANELS.

DEAD LOAD:

A. 10 PSF DEAD LOAD APPLIED OVER THE ENTIRE PLAN AREA OF THE SPACE FRAME IN ADDITION TO THE SELF WEIGHT OF THE STRUCTURE.

B. A SINGLE 200LB DEAD LOAD APPLIED TO ANY NODE, CHORD OR CONNECTION ON THE SPACE FRAME. SEE ORT EQUIPMENT DETAIL LAYOUT FOR APPROXIMATE QUANTITY AND LOCATION OF LOADING.

C. A PROVISIONAL DEAD LOAD OF 100 LB PER FOOT FOR SIGN PANELS OVER THE ON-COMING TRAFFIC END OF THE SPACE FRAME.

STRUCTURAL STEEL:

A. STRUCTURAL STEEL PLATES AND SHAPES SHALL BE ASTM A572 GR. 50 AND SHALL MEET THE REQUIREMENTS OF AWS D1.1 SECTION 4 PART D FOR CVN TESTING.

B. STRUCTURAL TUBING SHALL BE MINIMUM ASTM A500, GRADE B (Fy = 46 ksi), DIAMETER PER FABRICATOR DESIGN.

C. ALL STRUCTURAL STEEL SHALL BE GALVANIZED IN ACCORDANCE WITH ASTM A123.

WELDING:
AMERICAN WELDING SOCIETY (AWS) D1.1 STRUCTURAL WELDING CODE - STEEL.

BOLTED CONNECTIONS:
UNLESS OTHERWISE NOTED, ALL BOLTED CONNECTIONS SPECIFYING BOLT DIAMETER 1/2" AND LARGER SHALL BE:
BOLTS - ASTM A325X TYPE 1 (THREADS EXCLUDED FROM SHEAR PLANE).
NUTS - ASTM A563
WASHERS - ASTM F436
BOLTS, NUTS AND WASHERS SHALL BE GALVANIZED IN ACCORDANCE WITH ASTM A153.

ANCHOR BOLTS:
ANCHOR BOLTS SHALL CONFORM TO ASTM F1554 GR. 105. NUTS SHALL CONFORM TO ASTM A563 AND PLATE WASHERS SHALL CONFORM TO ASTM A709, GR. 50. BOLTS, NUTS AND PLATE WASHERS SHALL BE FULLY GALVANIZED IN ACCORDANCE WITH ASTM A153.

SHOP DRAWINGS:
THE SHOP DRAWINGS AND DESIGN CALCULATIONS FOR THE SPACE FRAME SELECTED BY THE CONTRACTOR SHALL BE PREPARED UNDER THE SUPERVISION OF A PROFESSIONAL ENGINEER LICENSED IN THE STATE OF MAINE AND SHALL HAVE THE SIGNATURE AND SEAL OF THAT PROFESSIONAL ENGINEER. FOR METAL FABRICATION WORK, APPROVED SHOP DRAWINGS SHALL BE AT THE METAL FABRICATOR'S SHOP PRIOR TO COMMENCEMENT OF FABRICATION. THE APPROVED SHOP DRAWINGS SHALL BE AVAILABLE AND ACCESSIBLE TO MAINE TURNPIKE INSPECTORS AT ALL TIMES AND MAY BE PHOTOCOPIED.

CAMBER:
THE SPACE FRAME SHALL HAVE A RESIDUAL UPWARD CAMBER OF SPAN/1000 IN LONGITUDINAL AND TRANSVERSE DIRECTIONS.

MANUFACTURER:
THE DESIGN, FABRICATION AND FURNISHING OF THE SPACE FRAME STRUCTURE SHALL BE PERFORMED BY THE FABRICATORS LISTED IN THE CONTRACT SPECIFICATIONS OR AN APPROVED EQUAL.

DESIGN LOADS:
THE CONTRACTOR SHALL FURNISH FINAL SPACE FRAME CANOPY DESIGN REACTIONS TO THE RESIDENT WITHIN 30 DAYS OF AWARD OF CONTRACT.

ERECTION NOTES:

1. THE CONTRACTOR AND SPACE FRAME FABRICATOR ARE TO CAREFULLY REVIEW THESE PLANS AND SPECIFICATIONS. CONDITIONS AT THE PROPOSED CONSTRUCTION SITE ALLOW LIMITED AREA FOR STAGING AND ASSEMBLY OF THE SPACE FRAME. THESE CONDITIONS MAY PRECLUDE SINGLE STAGE ERECTION OF THE SPACE FRAME.

NOTES:

1. THESE ARE SPACE FRAME DESIGN CRITERIA DOCUMENTS: PRELIMINARY PLANS NOT TO BE USED FOR CONSTRUCTION. THESE PLANS ARE PROVIDED FOR INFORMATIONAL PURPOSES ONLY, INTENDED TO ESTABLISH THE PROPOSED PROJECT'S DESIGN AND CONSTRUCTION INTENT, QUALITY AND CHARACTER. CONTRACTOR SHALL USE THESE PLANS IN ACCORDANCE WITH THE SPECIFICATIONS.

Date:2/13/2015

Filename: 083_S_ORT Space Frame.dgn

Scale:

No.	Revision	By	Date

Designed by: HNTB

CONSULTANT PROJECT MANAGER: R. Bruce Munger, P.E.

	By	Date		By	Date
Designed	AJF	02/15	Checked	CRM	02/15
Drawn	MPC	02/15	In Charge of	RAL	02/15

HNTB CORPORATION
340 County Road, Suite 6-C
Westbrook, ME 04092
TEL (207) 774-5155
FAX (207) 228-0909

MAINE TURNPIKE

THE GOLD STAR MEMORIAL HIGHWAY

MTA PROJECT MANAGER: William Yates

WEST GARDINER BARRIER TOLL PLAZA ORT CONVERSION

ORT SPACE FRAME

SHEET NUMBER: S-08

CONTRACT:2015.11

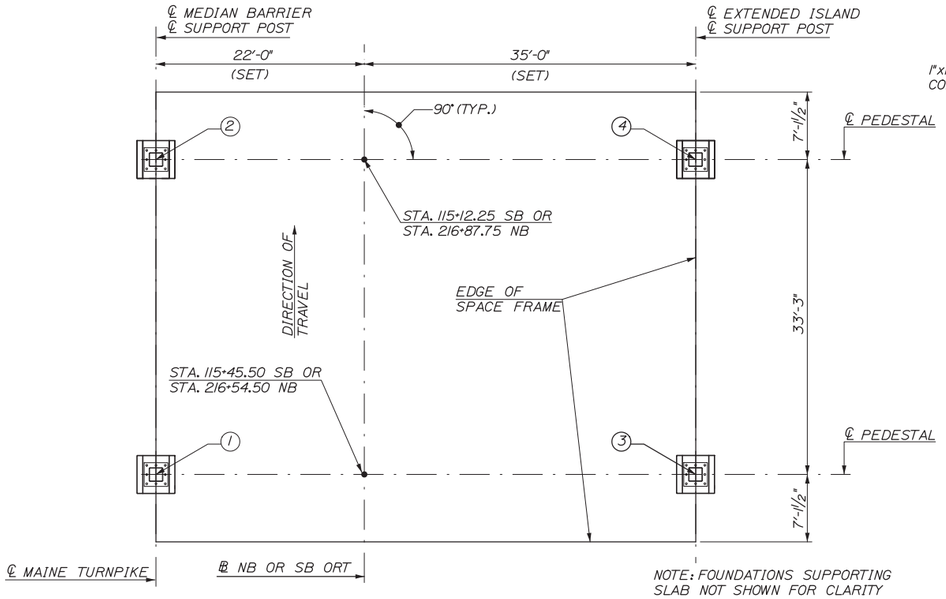

NB FOUNDATION LOCATION PLAN

(SB SIMILAR)
SCALE: 1/8"= 1'-0"

FOUNDATION ELEVATIONS						
ROADWAY	FOUNDATION	ELEV. A	ELEV. B	ELEV. C	ELEV. D	ELEV. E
NB	①	165.96	162.21	158.96	147.50	141.50
	②	165.82	162.07	158.82	150.00	144.00
	③	165.71	161.96	158.71	135.00	129.00
	④	165.39	161.64	158.39	133.50	127.50
SB	①	166.13	162.38	159.13	144.00	138.00
	②	166.09	162.34	159.09	144.00	138.00
	③	165.66	161.91	158.66	145.00	139.00
	④	165.35	161.60	158.35	148.50	142.50

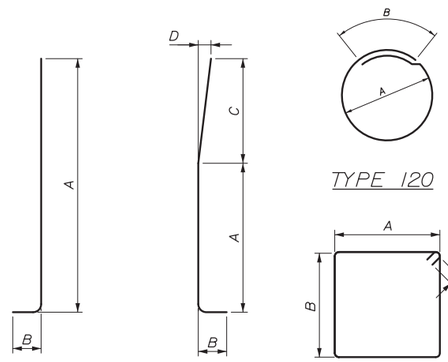

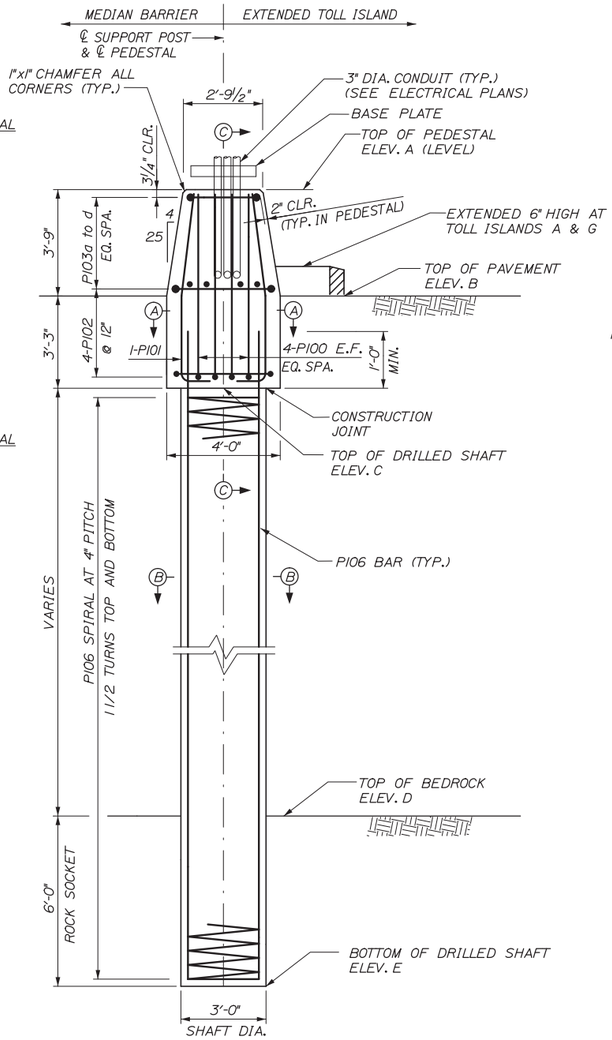

STRUCTURE FOUNDATION

SCALE: 3/8"= 1'-0"

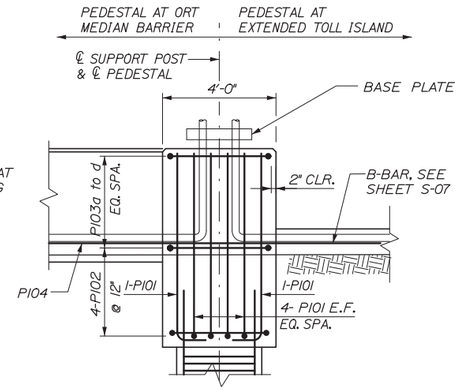

SECTION C-C

SCALE: 3/8"= 1'-0"

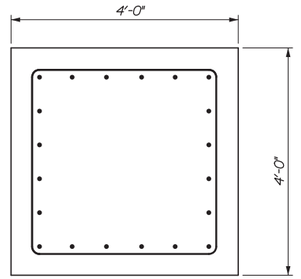

SECTION A-A

SCALE: 3/4"= 1'-0"

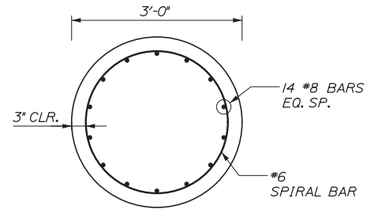

SECTION B-B

SCALE: 3/4"= 1'-0"

REINFORCING SCHEDULE								
MARK	SIZE	NO.	LENGTH	TYPE	A	B	C	D
P100	8	64	8'-0"	118	6'-7"	1'-5"		
P101	8	96	8'-7"	119	3'0"	1'-5"	3'-7"	0'-7"
P102	4	32	15'-5"	100	3'-8"	3'8"		
P103a to d	4	32	MAX. 15'-5" MIN. 13'-0"	100	MAX. 3'-8" MIN. 2'-5½"	3'-8"		
P104	6	8	40'-0"	STR.		4'-0"		
P105	8	112	MAX. 17'-0" MIN. 10'0"	STR.				
P106	6	8	MAX. 127'-0" MIN. 79'-0"	SPIRAL	2'-6"			

NOTES:

1. CONCRETE SHALL BE CLASS AAA, f'c = 4500 PSI.
2. REINFORCEMENT SHALL BE EPOXY COATED ASTM A615, GRADE 60.
3. CONCRETE FOR THE PEDESTALS SHALL BE PAID FOR UNDER ITEM 502.231 - STRUCTURAL CONCRETE SPACE FRAME PEDESTALS.
4. EXISTING 12" DRAINAGE PIPES FOR THE CANOPY AND TREADLE DRAINS ARE APPROXIMATELY LOCATED 2' FROM EDGE OF STRUCTURAL SLABS. CONTRACTOR SHALL AVOID DISTURBING PIPE.
5. LIMITS OF TEMPORARY EARTH SUPPORT SYSTEMS ARE 18" FROM EDGE OF SPACE FRAME FOUNDATIONS. CONTRACTOR MAY OPEN CUT FOR CONSTRUCTION PORTIONS OF THE SPACE FRAME FOUNDATIONS. EXCAVATION, GRAVEL AND PAVEMENT BEYOND LIMITS OF THE TEMPORARY EARTH SUPPORT SYSTEMS WILL BE INCIDENTAL TO THE TEMPORARY EARTH SUPPORT SYSTEMS.
6. ADJACENT TOLL PLAZA STRUCTURAL SLAB SHALL NOT BE UNDERMINED FROM EXCAVATION AND CONSTRUCTION OF SPACE FRAME FOUNDATIONS.

Date:2/13/2015

Filename: 084_S_ORT Space Frame foundation details.dgn

Scale: AS NOTED

Designed by: HNTB

No.	Revision	By	Date

CONSULTANT PROJECT MANAGER: R. Bruce Munger, P.E.

	By	Date		By	Date
Designed	AJF	02/15	Checked	CRM	02/15
Drawn	MPC	02/15	In Charge of	RAL	02/15

HNTB CORPORATION
340 County Road, Suite 6-C
Westbrook, ME 04092
TEL (207) 774-5155
FAX (207) 228-0909

MAINE TURNPIKE

THE GOLD STAR MEMORIAL HIGHWAY

MTA PROJECT MANAGER: William Yates

WEST GARDINER BARRIER TOLL PLAZA ORT CONVERSION

ORT SPACE FRAME FOUNDATION DETAILS

SHEET NUMBER: S-09

CONTRACT:2015.11

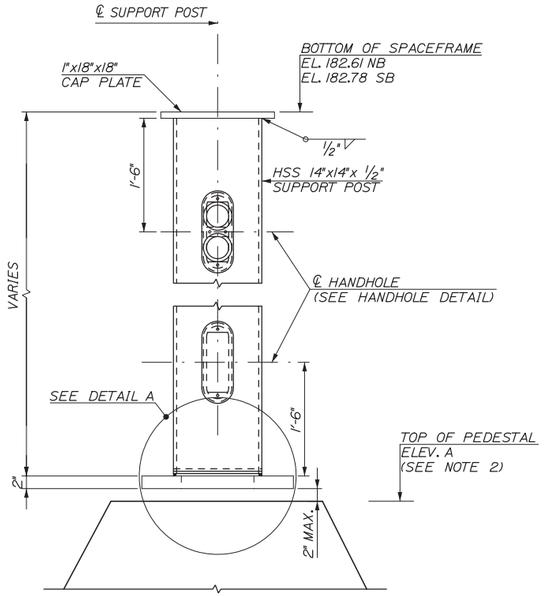

POST ELEVATION

1" = 1'-0"

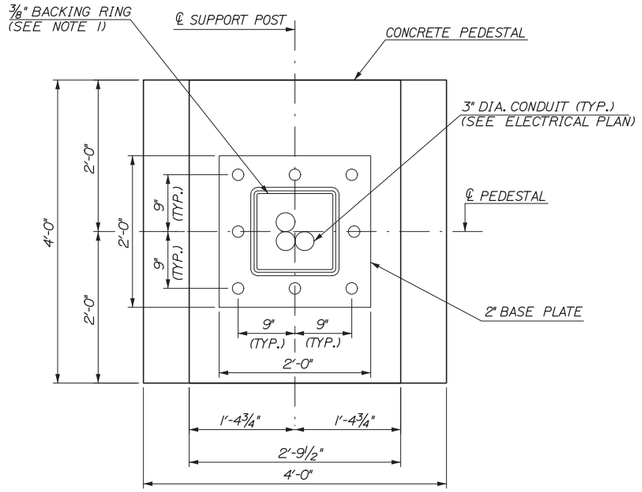

PEDESTAL PLAN VIEW

1"= 1'-0"

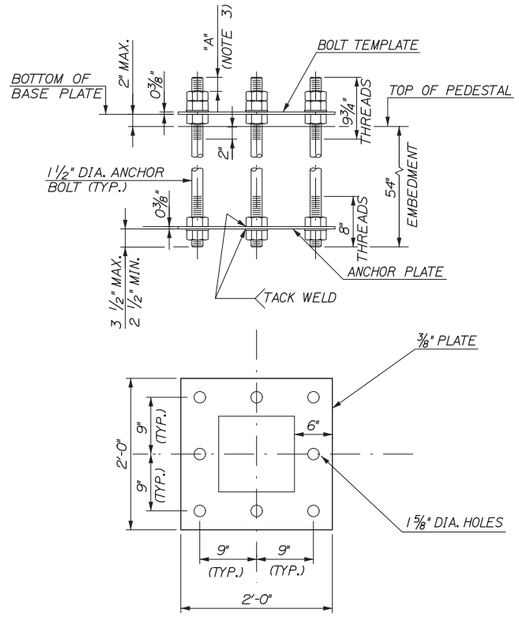

ANCHOR PLATE/BOLT TEMPLATE DETAIL

1"= 1'-0"

NOTES:

1. FULL PENETRATION WELDED SUPPORT POST TO BASE PLATE CONNECTION WITH THE BACKING RING ATTACHED TO THE BASE PLATE WITH A CONTINUOUS FILLET WELD AROUND THE INTERIOR FACE OF THE BACKING RING. THE THICKNESS OF THE BACKING RING SHALL NOT EXCEED 3/8".
2. FOR PEDESTAL ELEVATIONS, SEE FOUNDATION ELEVATIONS TABLE ON SHEET S-09.
3. DIMENSION "A" SHALL BE BETWEEN 1" MAX. AND 1/2" MIN. ONCE THE 2" BASE PLATE HAS BEEN INSTALLED.
4. ALL STEEL COMPONENTS AND HARDWARE SHALL BE HOT DIP GALVANIZED AFTER FABRICATION IN ACCORDANCE WITH ASTM A123 AND ASTM A153 AS APPLICABLE.

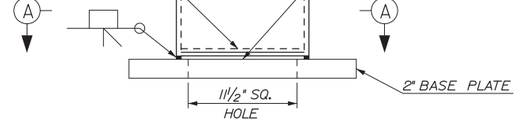

DETAIL A

1 1/2" = 1'-0"

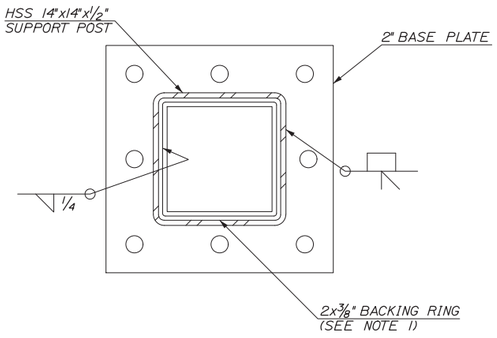

SECTION A-A

1 1/2" = 1'-0"

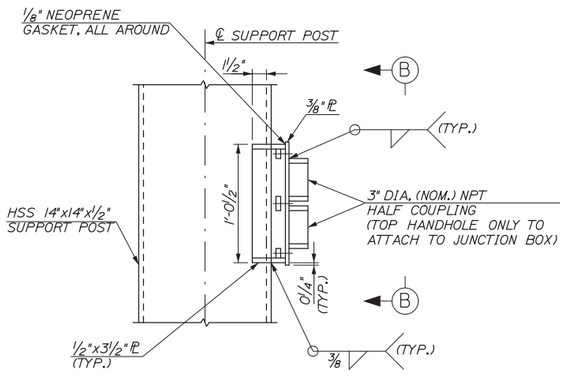

HANDHOLE DETAIL

1 1/2" = 1'-0"

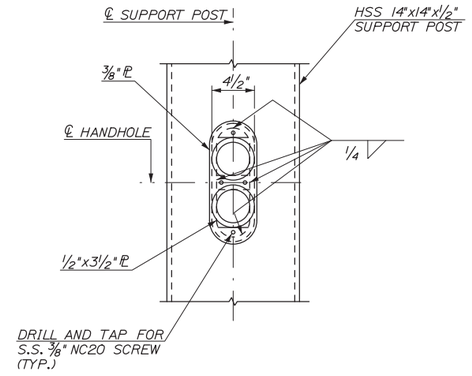

TOP HANDHOLE

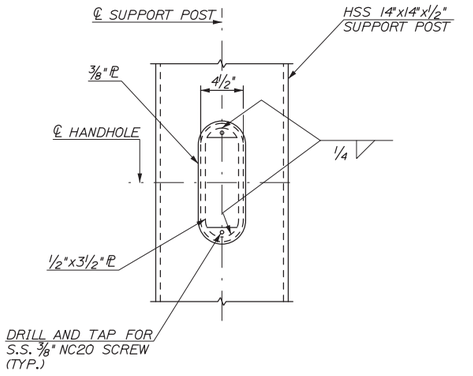

BOTTOM HANDHOLE

VIEW B-B

1 1/2" = 1'-0"

Scale:				Designed by: HNTB					
No.	Revision	By	Date	CONSULTANT PROJECT MANAGER: R. Bruce Munger, P.E.					
					By	Date		By	Date
				Designed	GLS	02/15	Checked	AJF	02/15
				Drawn	MPC	02/15	In Charge of	RAL	02/15

HNTB CORPORATION
340 County Road, Suite 6-C
Westbrook, ME 04092
TEL (207) 774-5155
FAX (207) 228-0909

MAINE TURNPIKE

THE GOLD STAR MEMORIAL HIGHWAY

MTA PROJECT MANAGER: William Yates

WEST GARDINER BARRIER TOLL PLAZA
ORT CONVERSION

ORT SPACE FRAME POST DETAILS

SHEET NUMBER: S-10

CONTRACT:2015.11

85 OF 118

Date:2/13/2015

Filename: 085_S_ORT Space Frame post details.dgn

Date:2/13/2015

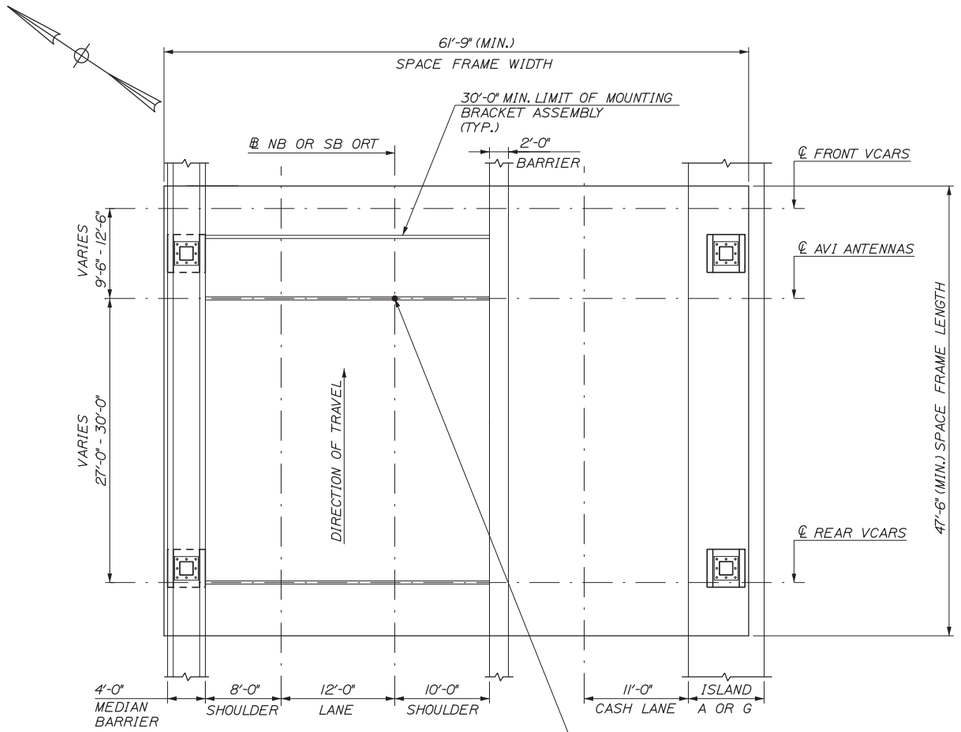

NB PLAN
(SB SIMILAR)
SCALE: 1/8" = 1'-0"

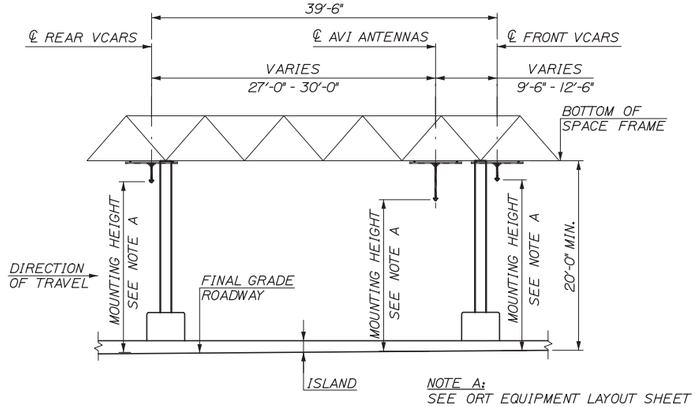

NOTE A:
SEE ORT EQUIPMENT LAYOUT SHEET FOR SENSOR LAYOUT AND EQUIPMENT MOUNTING REQUIREMENTS.

EAST ELEVATION
SCALE: 1/8" = 1'-0"

NOTES:
1. MOUNTING BRACKET ASSEMBLIES SHALL BE CONSTRUCTED OF GALVANIZED UNISTRUT BRAND MATERIALS, OR AN APPROVED EQUAL.
2. SEE ELECTRICAL PLANS FOR LAYOUT OF VCARS, AVI ANTENNAS AND DVAS CAMERAS. SEE ORT EQUIPMENT LAYOUT FOR MOUNTING DETAILS.
3. HORIZONTAL SUPPORTS FOR EQUIPMENT MUST REMAIN WITHIN MOUNTING HEIGHT TOLERANCES. DISCONTINUITY OF 2" DIA. PIPE IS PERMISSIBLE TO ACHIEVE MOUNTING HEIGHTS.
4. PIPE SHALL CONFORM TO ASTM A-53, GALVANIZED.
5. S.S. U-BOLTS AND BOLTS SHALL CONFORM TO ASTM A-276, TYPE 304.
6. STEEL PLATE SHALL CONFORM TO ASTM A-572, GRADE 50, GALVANIZED.
7. THE VCARS (REAR AND FRONT) UNITS AND DVAS CAMERAS WILL BE PROVIDED BY TRANSCORE. THE AVI ANTENNAS WILL BE PROVIDED BY MTA.
8. CLEARANCE FOR VCARS UNITS SHALL BE 6" ON THE SIDES AND 2'-0" ABOVE.
9. ℄ OF P1000 FOR AVI SHALL BE 11'-0" FROM FRONT VCARS ℄.
10. ALL MOUNTING BRACKET ASSEMBLIES SHALL BE CAPABLE OF +/- 1' OF VERTICAL ADJUSTMENT.

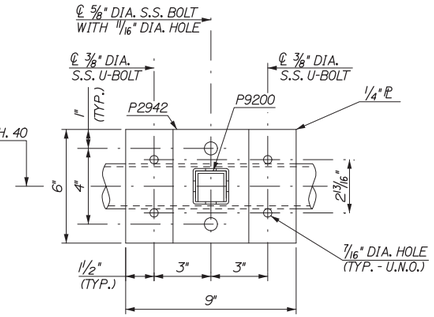

SECTION A-A
SCALE: 3" = 1'-0"

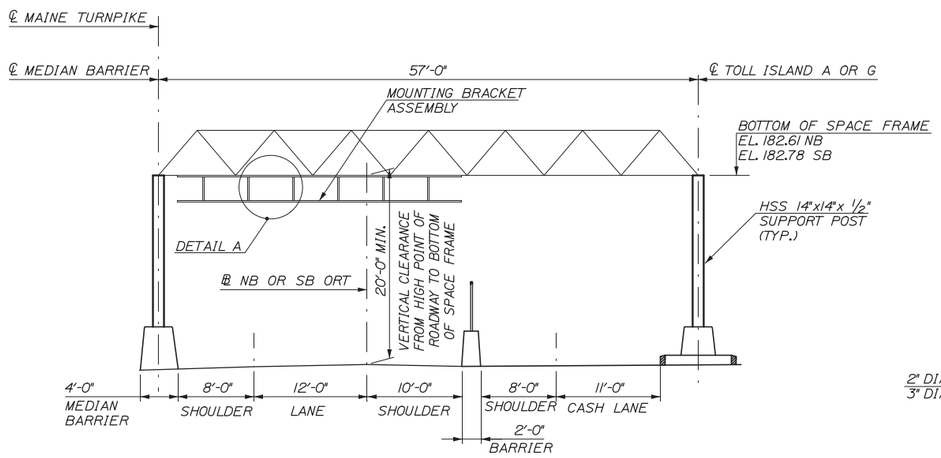

NB ELEVATION
(SB SIMILAR)
SCALE: 1/8" = 1'-0"

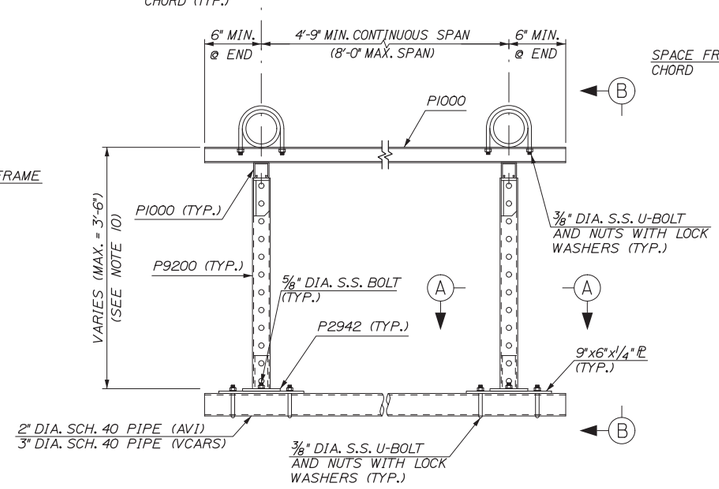

DETAIL A
SCALE: 1 1/2" = 1'-0"

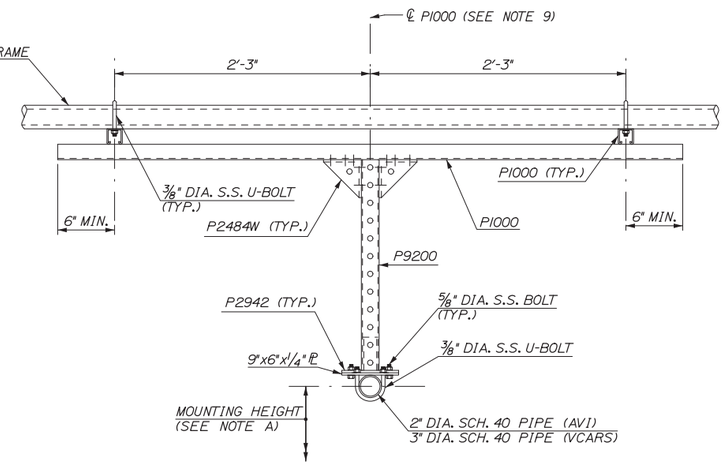

VIEW B-B
SCALE: 1 1/2" = 1'-0"

Filename: 086_S_ORT Space Frame mounting bracket.dgn

Scale:

No.	Revision	By	Date

Designed by: HNTB

CONSULTANT PROJECT MANAGER: R. Bruce Munger, P.E.

	By	Date		By	Date
Designed	GLS	02/15	Checked	AJF	02/15
Drawn	MPC	02/15	In Charge of	RAL	02/15

HNTB CORPORATION
340 County Road, Suite 6-C
Westbrook, ME 04092
TEL (207) 774-5155
FAX (207) 228-0909

MAINE TURNPIKE

THE GOLD STAR MEMORIAL HIGHWAY

MTA PROJECT MANAGER: William Yates

WEST GARDINER BARRIER TOLL PLAZA ORT CONVERSION

ORT SPACE FRAME MOUNTING BRACKET ASSEMBLY DETAILS

SHEET NUMBER: S-11

CONTRACT:2015.11

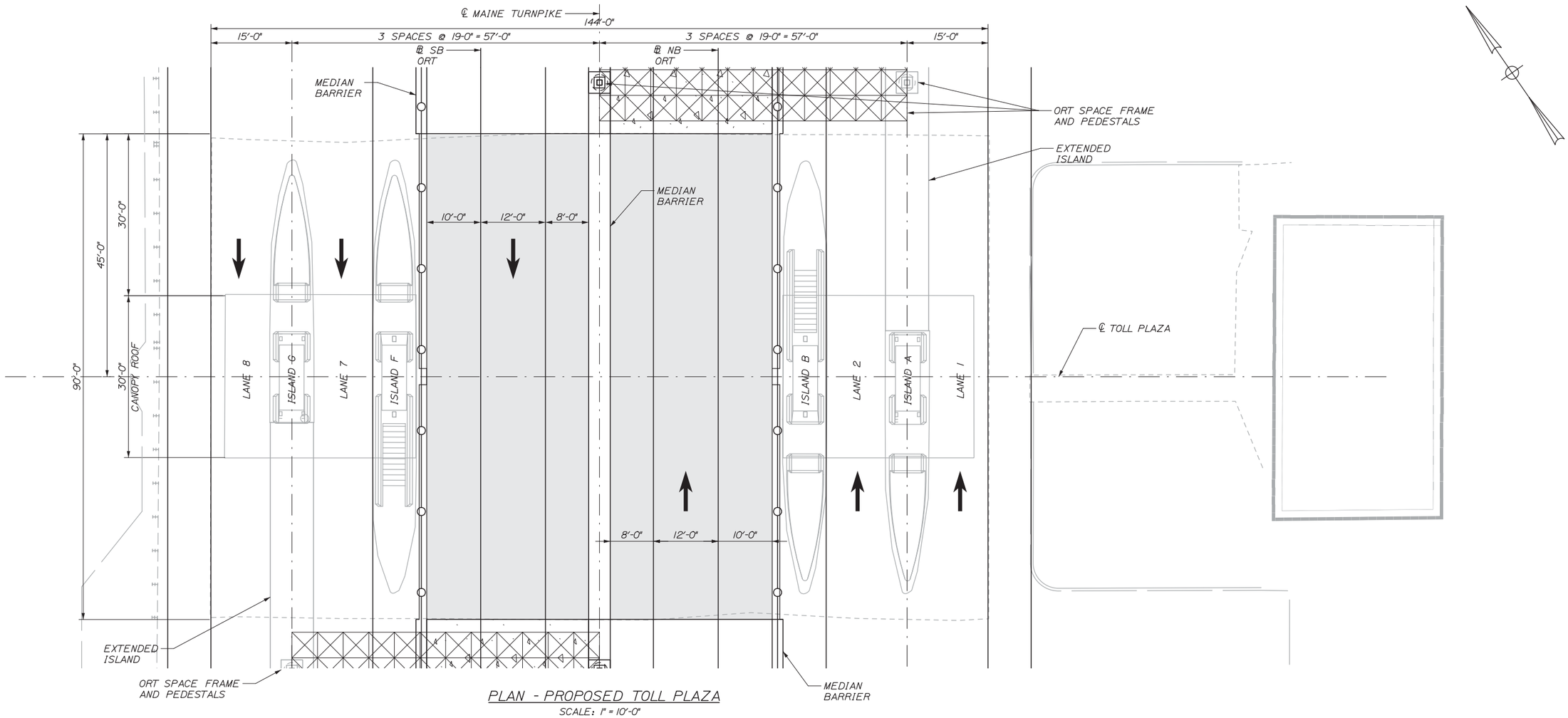

PLAN - PROPOSED TOLL PLAZA

SCALE: 1" = 10'-0"

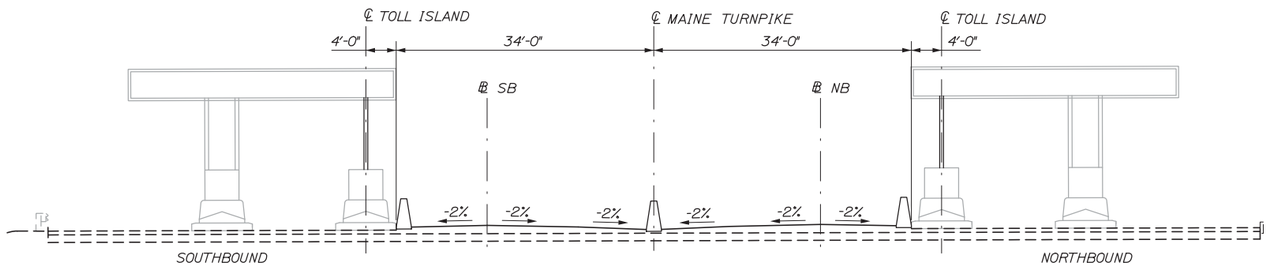

ELEVATION

SCALE: 1" = 10'-0"

Date:2/13/2015

Filename: 087_S_TollGeneralPlan.dgn

Scale:

No.	Revision	By	Date

Designed by: HNTB

CONSULTANT PROJECT MANAGER: R. Bruce Munger, P.E.

	By	Date		By	Date
Designed	GLS	02/15	Checked	AJF	02/15
Drawn	MPC	02/15	In Charge of	RAL	02/15

HNTB CORPORATION
340 County Road, Suite 6-C
Westbrook, ME 04092
TEL (207) 774-5155
FAX (207) 228-0909

MAINE TURNPIKE

THE GOLD STAR MEMORIAL HIGHWAY

MTA PROJECT MANAGER: William Yates

WEST GARDINER BARRIER TOLL PLAZA ORT CONVERSION

TOLL PLAZA GENERAL PLAN

SHEET NUMBER: S-12

CONTRACT:2015.11

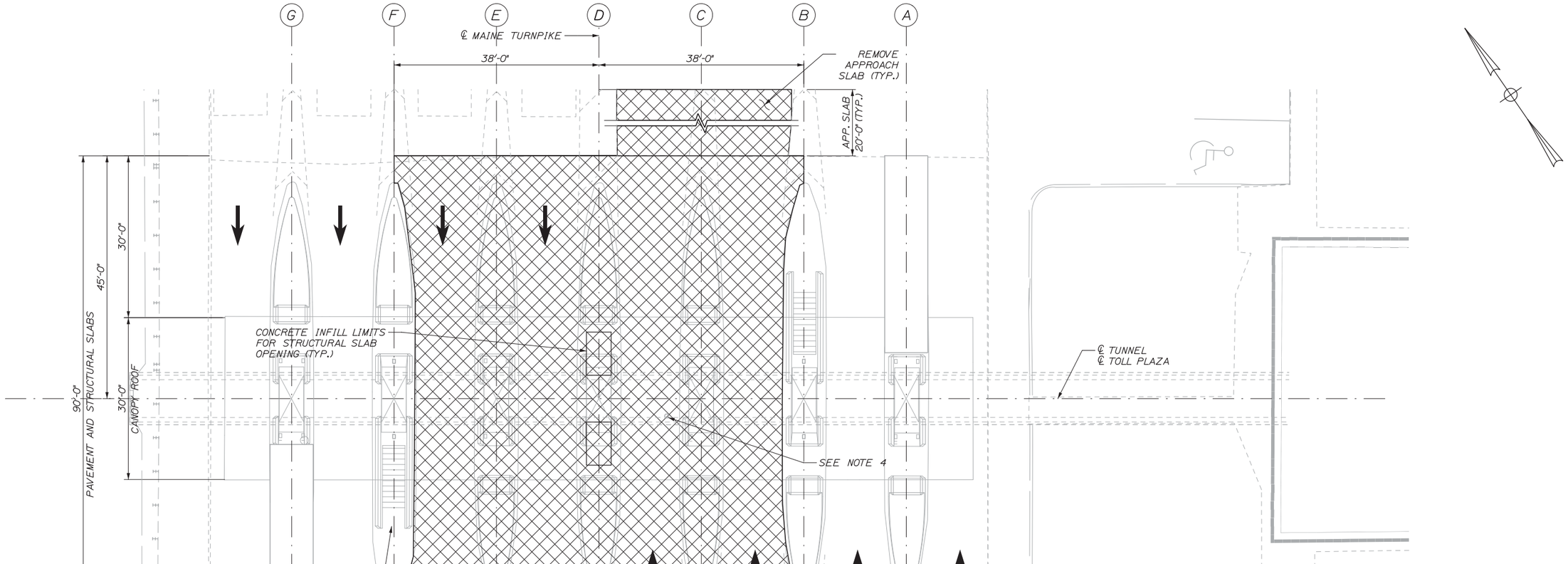

PLAN
SCALE: 1" = 10'-0"

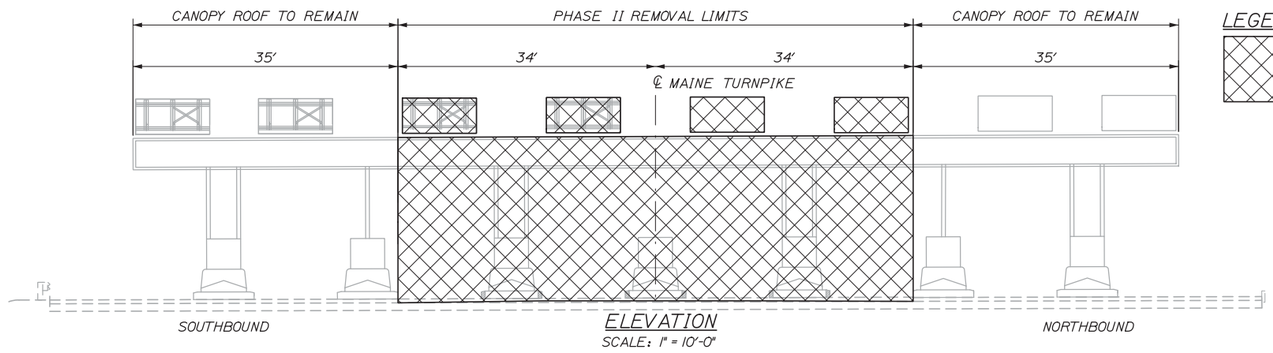

ELEVATION
SCALE: 1" = 10'-0"

LEGEND:

PHASE II DEMOLITION - REMOVE EXISTING PAVEMENT SLAB, 20'-0" APPROACH SLAB, TOLL ISLANDS C, D, E, TOLL CANOPY AND SUPPORTS, FIXED CANOPY SIGNS FOR LANES 3 & 6, AND TROLLEY SYSTEM WITHIN AREA OF CANOPY DEMOLITION (STRUCTURAL SLAB TO REMAIN).

NOTES:

1. SEE GENERAL NOTES FOR ITEMS TO SALVAGE.
2. BEFORE BEGINNING PLAZA DEMOLITION THE CONTRACTOR SHALL SUBMIT A DEMOLITION PLAN TO THE RESIDENT FOR APPROVAL.
3. REMOVAL OF LOOPS, CONDUIT, AND ASSOCIATED WIRING IN EXISTING CONCRETE SHALL BE INCIDENTAL TO ITEM 202.17, REMOVING EXISTING STRUCTURAL CONCRETE.
4. CUT ABANDONED DRAINAGE PIPE FLUSH WITH TUNNEL WALL. PLUG PIPE OPENINGS IN TUNNEL WALL AND CEILING WITH A NON-SHRINK WATERPROOF GROUT PRODUCT APPROVED BY THE RESIDENT ENGINEER.

Date:2/13/2015

Filename: 088_S_Demolition Plan - Phase 2.dgn

Scale: AS NOTED

No.	Revision	By	Date

Designed by: HNTB

CONSULTANT PROJECT MANAGER: R. Bruce Munger, P.E.

	By	Date		By	Date
Designed	GLS	02/15	Checked	AJF	02/15
Drawn	MPC	02/15	In Charge of	RAL	02/15

HNTB CORPORATION
340 County Road, Suite 6-C
Westbrook, ME 04092
TEL (207) 774-5155
FAX (207) 228-0909

MAINE TURNPIKE

THE GOLD STAR MEMORIAL HIGHWAY

MTA PROJECT MANAGER: William Yates

WEST GARDINER BARRIER TOLL PLAZA ORT CONVERSION

STRUCTURAL DEMOLITION PLAN - PHASE 2

SHEET NUMBER: S-13

CONTRACT:2015.11

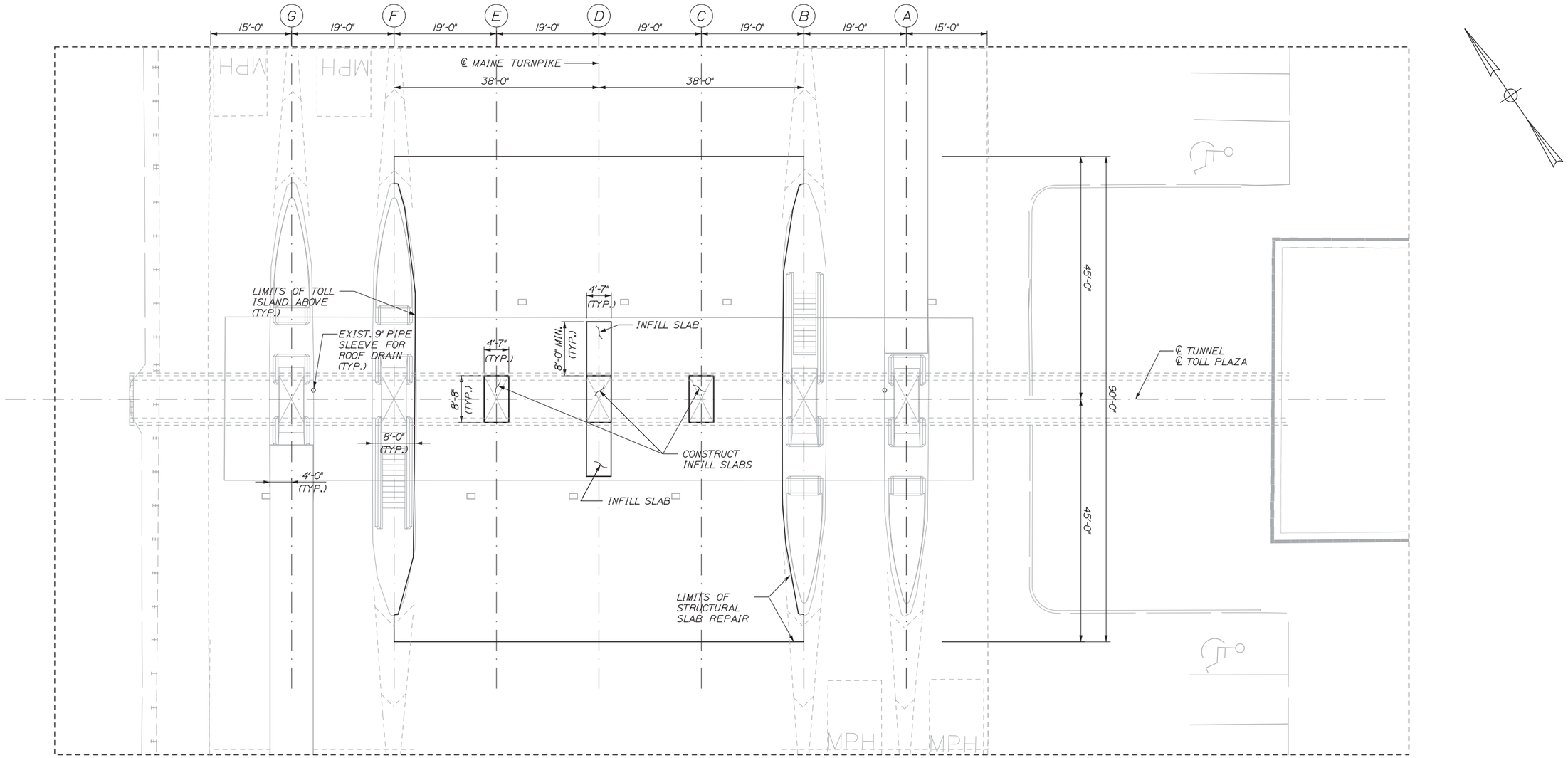

NOTES:

1. THE CONTRACTOR SHALL NOT PERFORM ANY REPAIR WORK WITHOUT THE APPROVAL OF THE RESIDENT.
2. FOR CONCRETE REPAIR AND INFILL SLAB DETAILS, SEE SHEET S-15.
3. THE CONTRACTOR SHALL INJECT EPOXY INTO CRACK IN UNDERSIDE OF TUNNEL ROOF SLAB BETWEEN ISLANDS B AND F. WORK SHALL BE INCIDENTAL TO CONCRETE REPAIR AND SLAB INFILL ITEMS.

PLAN
STRUCTURAL SLAB AND TUNNEL ROOF SLAB REPAIRS
SCALE: 1" = 10'-0"

Date:2/13/2015

Filename: 089_S_SlabRoofRepairPlan.dgn

Scale: AS NOTED

No.	Revision	By	Date

Designed by: HNTB

CONSULTANT PROJECT MANAGER: R. Bruce Munger, P.E.

	By	Date		By	Date
Designed	GLS	02/15	Checked	AJF	02/15
Drawn	MPC	02/15	In Charge of	RAL	02/15

HNTB CORPORATION
340 County Road, Suite 6-C
Westbrook, ME 04092
TEL (207) 774-5155
FAX (207) 228-0909

MAINE TURNPIKE

THE GOLD STAR MEMORIAL HIGHWAY

MTA PROJECT MANAGER: William Yates

WEST GARDINER BARRIER TOLL PLAZA
ORT CONVERSION

STRUCTURAL SLAB AND TUNNEL ROOF SLAB REPAIR PLAN

SHEET NUMBER: S-14

CONTRACT:2015.11

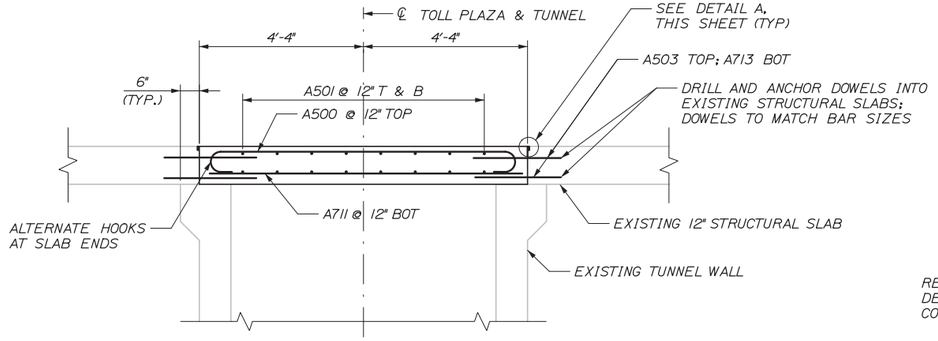

TUNNEL ROOF INFILL SLAB

SCALE: 1/2" = 1'-0"

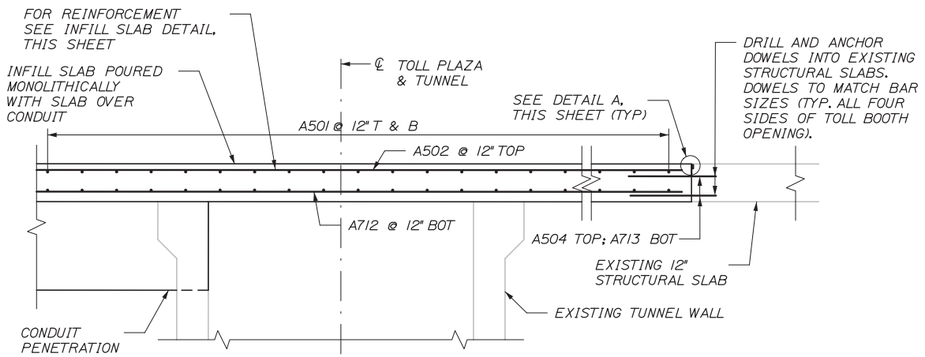

TUNNEL ROOF INFILL SLAB @ CONDUIT

SCALE: 1/2" = 1'-0"

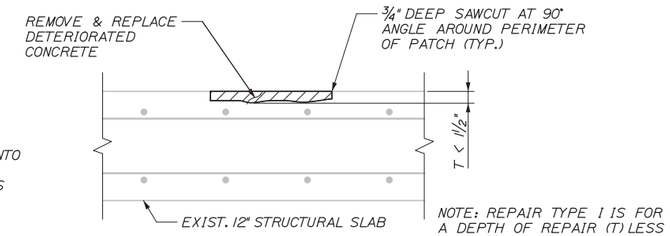

CONCRETE REPAIR TYPE I

NTS

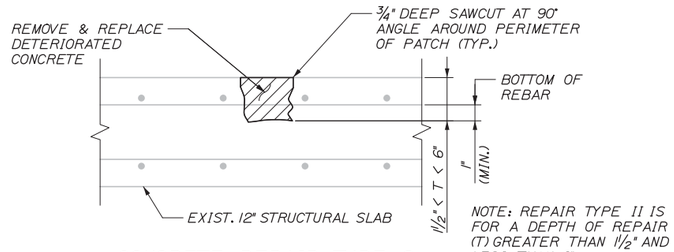

CONCRETE REPAIR TYPE 2

NTS

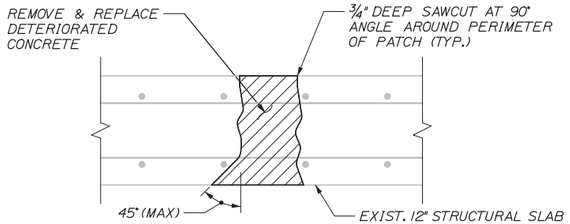

CONCRETE REPAIR TYPE 3

NTS

GENERAL NOTES:

1. PROVIDE REINFORCEMENT BARS CONFORMING TO THE REQUIREMENTS OF ASTM A615M, A616M, AND A700M.
2. ALL STEEL REBAR SHALL BE EPOXY COATED. REMOVE AND REPLACE IN KIND ALL PORTIONS OF DAMAGED OR HEAVILY CORRODED REINFORCEMNT BARS BY SATISFACTORILY SPLICING TO THE REMAINING REINFORCEMENT BARS. THIS WORK SHALL BE CONSIDERED INCIDENTAL TO THE REPAIR.
3. ANY OR ALL CONCRETE REPAIR TYPES MAY BE REQUIRED WITHIN ANY DEFECT.
4. REPAIRS SHALL BE IN ACCORDANCE WITH SPECIAL PROVISION 518.
5. SQUARE OFF LIMITS OF DETERIORATED CONCRETE REMOVED WITH A 3/4" SAWCUT.
6. REMOVE ALL LOOSE AND DELAMINATED CONCRETE TO PROVIDE A SOUND BOND BETWEEN EXISTING CONCRETE AND EPOXY MORTAR.
7. CONTRACTOR SHALL REPAIR AREAS OF STRUCTURAL SLAB DETERIORATION AS DIRECTED BY THE RESIDENT. LOCATIONS OF SLAB REPAIRS ARE UNDETERMINED. RESIDENT SHALL IDENTIFY AND MARK AREAS FOR SLAB REPAIR AFTER THE WEARING SURFACE HAS BEEN REMOVED.
8. REINFORCING STEEL SCHEDULES FOR THE STRUCTURAL SLAB REPAIR WILL BE THE RESPONSIBILITY OF THE CONTRACTOR. REFER TO SUBSECTION 503.03 OF THE STANDARD SPECIFICATIONS FOR MORE INFORMATION. PAYMENT FOR ALL WORK ASSOCIATED WITH DEVELOPING REINFORCING STEEL SCHEDULES WILL BE CONSIDERED INCIDENTAL TO RELATED CONTRACT ITEMS.
9. PROTECTIVE COATING FOR CONCRETE SURFACES SHALL BE APPLIED TO ALL EXPOSED SURFACES OF CONCRETE CURBS AND CONCRETE WEARING SURFACES.
10. ANY DAMAGE TO EXISTING CONCRETE OR REINFORCING STEEL RESULTING FROM THE WORK PERFORMED SHALL BE REPAIRED OR REPLACED BY A METHOD APPROVED BY THE RESIDENT AT NO COST TO THE AUTHORITY.
11. ALL EXISTING MATERIALS WHICH ARE REMOVED FROM THE WORK AREA SHALL BE REMOVED FROM THE SITE AND PROPERLY DISPOSED OF BY THE CONTRACTOR IN A MANNER IN ACCORDANCE WITH THE MAINE DEPARTMENT OF ENVIRONMENTAL PROTECTION SOLID WASTE REGULATIONS. THESE EXISTING MATERIALS INCLUDE, BUT ARE NOT LIMITED TO, CONCRETE, METAL CASING, REINFORCEMENT STEEL, SILT AND DEBRIS ON OR ATTACHED TO THE STRUCTURE WITHIN THE WORK AREAS. THE COST OF REMOVAL AND DISPOSAL SHALL BE INCIDENTAL TO THE COST OF THE WORK ITEMS FOR WHICH THESE REMOVALS ARE REQUIRED.
12. REINFORCING STEEL SHALL HAVE A 2 1/2" MINIMUM COVER UNLESS OTHERWISE NOTED.
13. COPIES OF THE AS BUILT PLANS ARE ON FILE AT THE MAINE TURNPIKE AUTHORITY. THE COMPLETENESS AND ACCURACY OF THESE PLANS IS NOT GUARANTEED.
14. ALL DOWELS SHALL HAVE A MINIMUM EMBEDMENT DEPTH OF 12".

STRUCTURAL SLAB REBAR SCHEDULE								
MARK	SIZE	NO.	LENGTH	TYPE	A	B	C	REMARKS
A500	5	10	10'-2"	110	8'-2"	1'-0"	0'-6"	TUNNEL ROOF LONGITUDINAL
A501	5	200	4'-9"	STR				TRANSVERSE - ALL LOCATIONS
A502	5	5	24'-2"	STR				TUNNEL AND CONDUIT LONGITUDINAL
A503	5	30	3'-6"	STR				LONGITUDINAL DOWELS
A711	7	10	8'-2"	STR				TUNNEL ROOF LONGITUDINAL
A712	7	5	24'-2"	STR				TUNNEL AND CONDUIT LONGITUDINAL
A713	7	30	4'-0"	STR				LONGITUDINAL DOWELS

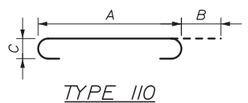

TYPE 110

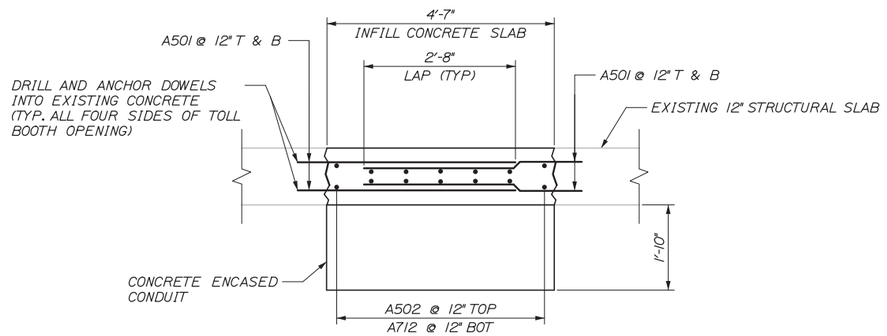

INFILL SLAB

N.T.S.

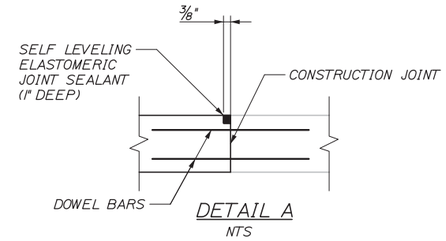

DETAIL A

NTS

Date: 2/13/2015

Filename: 090_S_Structural Slab Details.dgn

Scale:				Designed by: HNTB					
No.	Revision	By	Date	CONSULTANT PROJECT MANAGER: R. Bruce Munger, P.E.					
					By	Date		By	Date
				Designed	GLS	02/15	Checked	AJF	02/15
				Drawn	MPC	02/15	In Charge of	RAL	02/15

HNTB CORPORATION
340 County Road, Suite 6-C
Westbrook, ME 04092
TEL (207) 774-5155
FAX (207) 228-0909

MAINE TURNPIKE

THE GOLD STAR MEMORIAL HIGHWAY

MTA PROJECT MANAGER: William Yates

WEST GARDINER BARRIER TOLL PLAZA ORT CONVERSION

STRUCTURAL SLAB AND TUNNEL ROOF SLAB DETAILS

SHEET NUMBER: S-15

CONTRACT: 2015.11

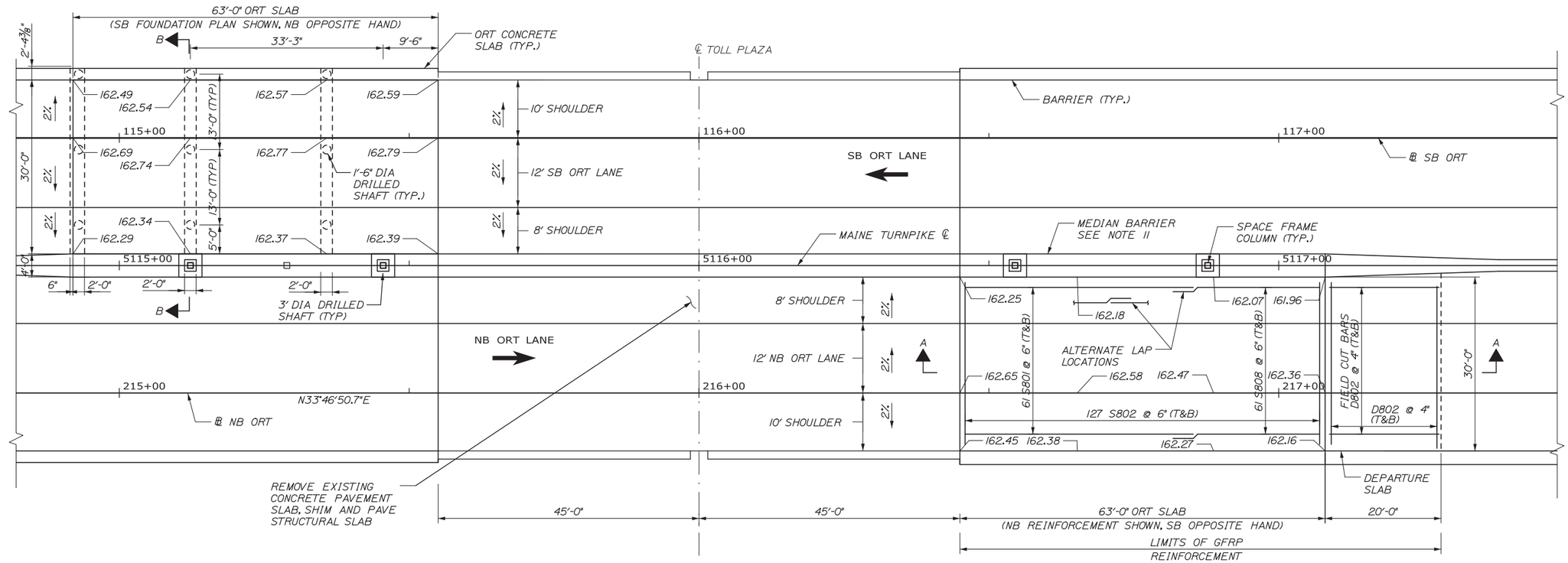

ORT SLAB PLAN

SCALE: 1" = 10'-0"

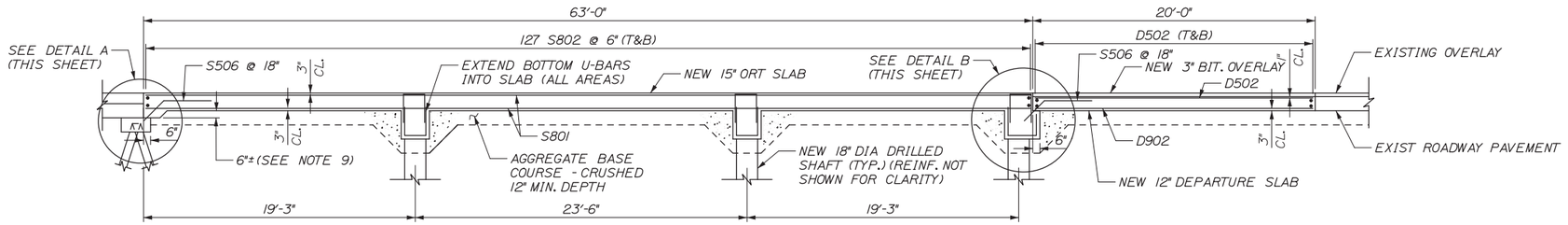

SECTION A-A

1" = 5'-0"

(NB ORT LANE SHOWN, SB ORT LANE SIMILAR)

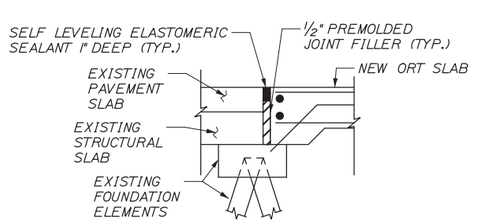

DETAIL A

NTS

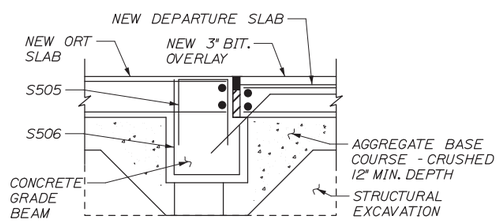

DETAIL B

NTS

ORT SLAB NOTES:

1. THE CONTRACTOR SHALL CONSTRUCT AN ORT SLAB IN THE NORTHBOUND AND SOUTHBOUND LANES AS SHOWN ON THE PLANS. EACH SLAB WILL HAVE A CROWN LINE BETWEEN THE TRAVEL LANE AND THE 10 FT SHOULDER AS PER THE SLOPES SHOWN ON THE PLANS. THE PROPOSED APPROACH AND DEPARTURE 8 FT SHOULDER PAVEMENT SHALL BE WARPED TO MATCH THE ORT SLAB 8 FT SHOULDER SLOPES. NO SHOULDER BREAK SHALL BE CONSTRUCTED ON THE ORT SLAB BETWEEN THE TRAVEL LANES AND THE 8 FT SHOULDERS.

2. EACH ORT SLAB SHALL BE PLACED IN ONE CONTINUOUS PLACEMENT. CONSTRUCTION JOINTS ARE NOT ALLOWED. SOFT CUT JOINTS SHALL BE CONSTRUCTED AT APPROXIMATE 10-FT SPACING, AS DIRECTED BY THE ENGINEER.

3. FINISHING OF ORT SLABS SHALL SHALL ADHERE TO WEARING SURFACE TOLERANCES PER 502 SPECIAL PROVISION (502.14).

4. CONCRETE FOR ORT SLABS SHALL BE CLASS AAA DECK WITH 5LBS/CY OF SYNTHETIC FIBER REINFORCING.

5. ORT SLAB SHALL HAVE A TRANSVERSED BROOMED FINISH.

6. ALL REINFORCING BAR IN ORT SLAB, GRADE BEAMS, AND 18" DIA. DRILLED SHAFTS SHALL BE GFRP.

7. ALL REINFORCING BAR SUPPORTS AND TIES FOR GFRP BARS SHALL BE NON-METALLIC.

8. DEPARTURE SLAB CROSS SLOPE SHALL FOLLOW THE CROSS SLOPE OF THE ORT SLAB.

9. HAUNCH HEIGHT SHALL BE ADJUSTED AS NEEDED TO MATCH FIELD CONDITIONS.

10. FOR ORT AND DEPARTURE SLAB REINFORCING SCHEDULE, SEE SHEET S-17.

11. FOR ADDITIONAL REINFORCEMENT IN MEDIAN BARRIER AT ORT SLAB, SEE SHEET BAR-05.

12. ELEVATION INFORMATION REPRESENTS FINISHED SURFACE.

Date:2/13/2015

Filename: 091_S_ORTSlabPlan.dgn

Scale: AS NOTED

No.	Revision	By	Date

Designed by: HNTB

CONSULTANT PROJECT MANAGER: R. Bruce Munger, P.E.

	By	Date		By	Date
Designed	AJF	02/15	Checked	GLS	02/15
Drawn	MPC	02/15	In Charge of	RAL	02/15

HNTB CORPORATION
340 County Road, Suite 6-C
Westbrook, ME 04092
TEL (207) 774-5155
FAX (207) 228-0909

MAINE TURNPIKE

THE GOLD STAR MEMORIAL HIGHWAY

MTA PROJECT MANAGER: William Yates

WEST GARDINER BARRIER TOLL PLAZA ORT CONVERSION

ORT SLAB PLAN

SHEET NUMBER: S-16

CONTRACT:2015.11

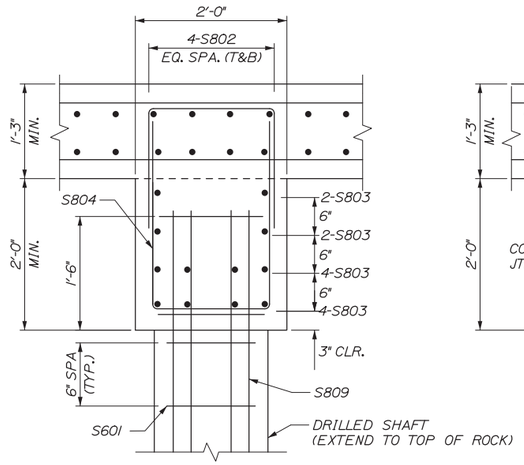

SECTION C-C
1" = 1'-0"

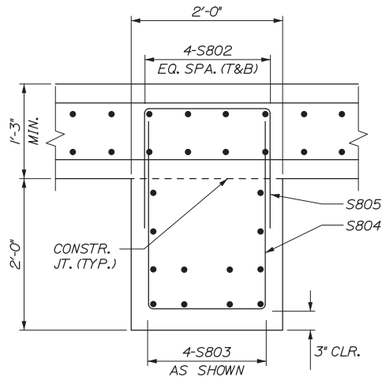

SECTION D-D
1" = 1'-0"

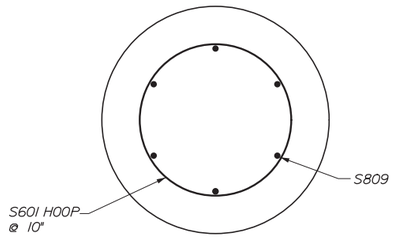

SECTION E-E
2" = 1'-0"

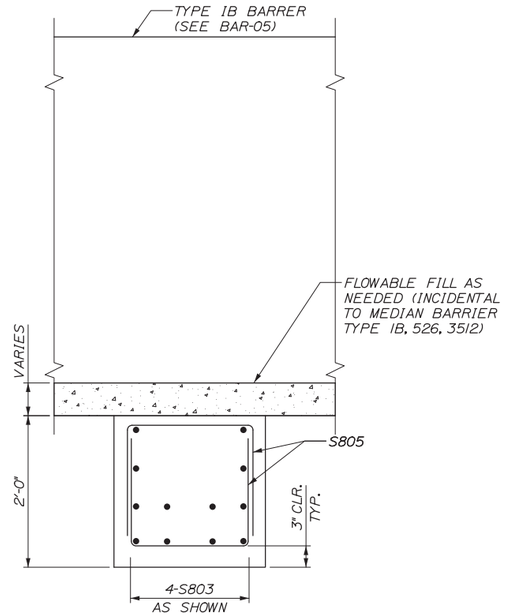

SECTION F-F
1" = 1'-0"

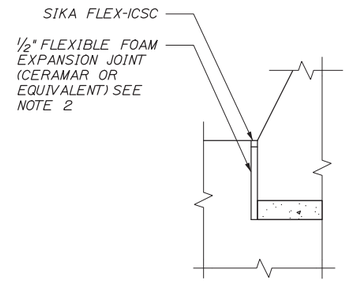

DETAIL A
2" = 1'-0"

ORT SLAB DRILLED SHAFT ELEVATIONS			
ROADWAY	STATION	TOP	BOTTOM
NB	216+64.25	158.92	147.50
	216+87.75	158.82	150.00
	217+07.00	158.71	150.00
SB	115+35.75	159.12	144.00
	115+12.25	159.09	144.00
	114+93.00	159.04	144.00

NOTE: BOTTOM OF DRILLED SHAFT IS AT TOP OF ROCK.

REINFORCING SCHEDULE									
MARK	SIZE	NO.	LENGTH	TYPE	A	B	C	D	REMARKS
DEPARTURE SLAB (GFRP BARS)									
D801	8	368	19'-6"	STR					INC. 1 DIA. BAR
D802	8	244	31'-0"	STR					FIELD CUT
ORT SLAB AND GRADE BEAMS (GFRP BARS)									
S801	8	244	40'-0"	STR					
S802	8	508	29'-6"	STR					
S803	8	72	31'-10"	STR					
S804	8	236	7'-0"	129	1'-6"	2'-9"			
S805	8	402	4'-0"	129	1'-6"	1'-3"			
S506	5	84	6'-6"	119	3'-8"	2'-10"	2'-4"		
S807	8	118	4'-0"	102	2'-0"	1'-6"	2'-9"	0'-0"	
S808	8	244	26'-0"	STR					
18" DIAMETER DRILLED SHAFTS (GFRP BARS)									
S809	8	54	MAX 18' MIN 11'	STR					
S601	6	96	4'-0"	120					

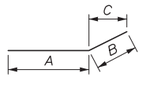

TYPE 119

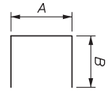

TYPE 129

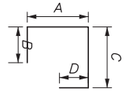

TYPE 102

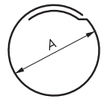

TYPE 120

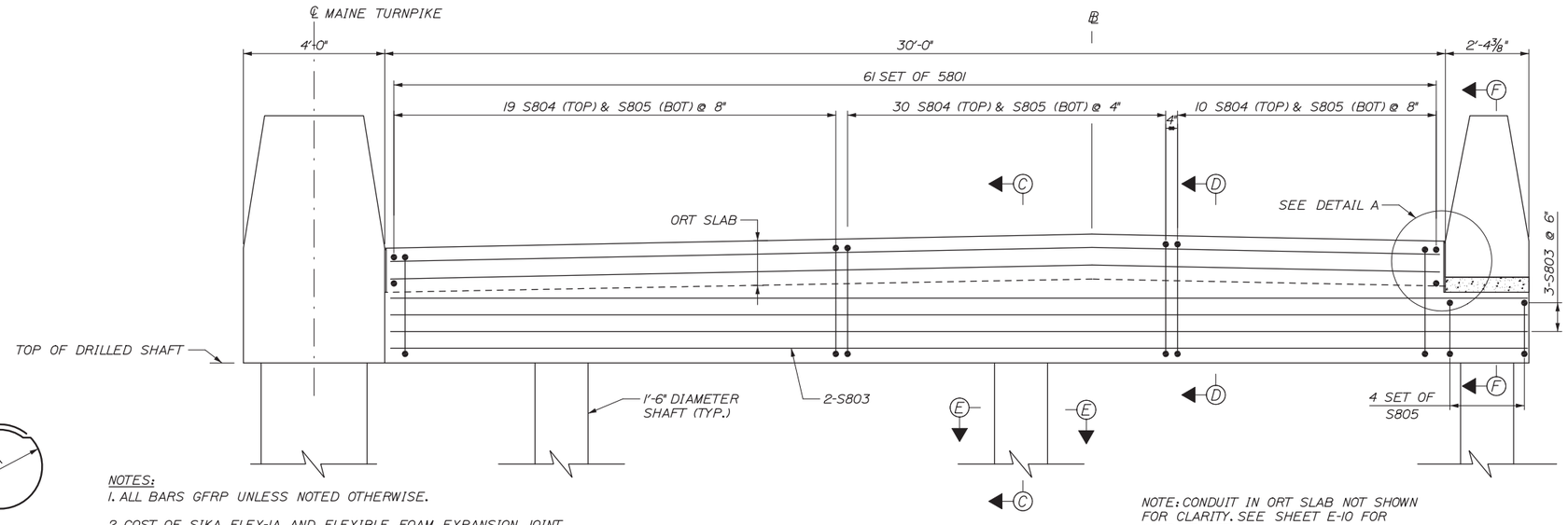

SECTION B-B
1/2" = 1'-0"

NOTES:
1. ALL BARS GFRP UNLESS NOTED OTHERWISE.

2. COST OF SIKA FLEX-1A AND FLEXIBLE FOAM EXPANSION JOINT SHALL BE INCIDENTAL TO ITEM 526, 3512, MEDIAN BARRIER TYPE 1B.

3. TWO D801 BAR (T&B PER SLAB) WILL NEED TO BE PLACED PARALLEL TO BARRIER TRANSITION. FIELD CUT D801 BARS TO ALLOW 3" COVER ON BOTH SIDES OF BAR.

NOTE: CONDUIT IN ORT SLAB NOT SHOWN FOR CLARITY. SEE SHEET E-10 FOR CONDUIT DETAILS.

NOTE: REINFORCING IN DRILLED SHAFTS NOT SHOWN FOR CLARITY

Scale:

No.	Revision	By	Date

Designed by: HNTB

CONSULTANT PROJECT MANAGER: R. Bruce Munger, P.E.

	By	Date		By	Date
Designed	AJF	02/15	Checked	CRM	02/15
Drawn	MPC	02/15	In Charge of	RAL	02/15

HNTB CORPORATION
340 County Road, Suite 6-C
Westbrook, ME 04092
TEL (207) 774-5155
FAX (207) 228-0909

MAINE TURNPIKE

THE GOLD STAR MEMORIAL HIGHWAY

MTA PROJECT MANAGER: William Yates

WEST GARDINER BARRIER TOLL PLAZA ORT CONVERSION

ORT SLAB FOUNDATION DETAILS

SHEET NUMBER: S-17

CONTRACT:2015.11

Date:2/13/2015

Filename: 092_S_ORTSlabFoundationDetails.dgn

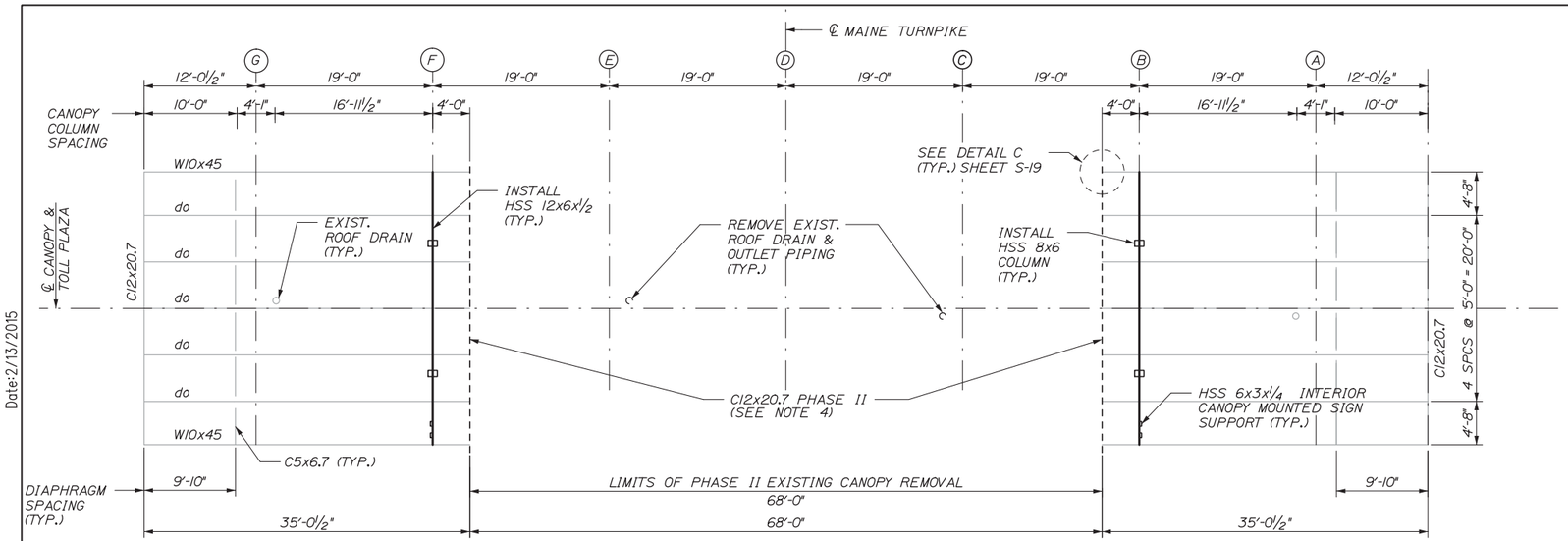

PLAN

SCALE: ⅛" = 1'-0"

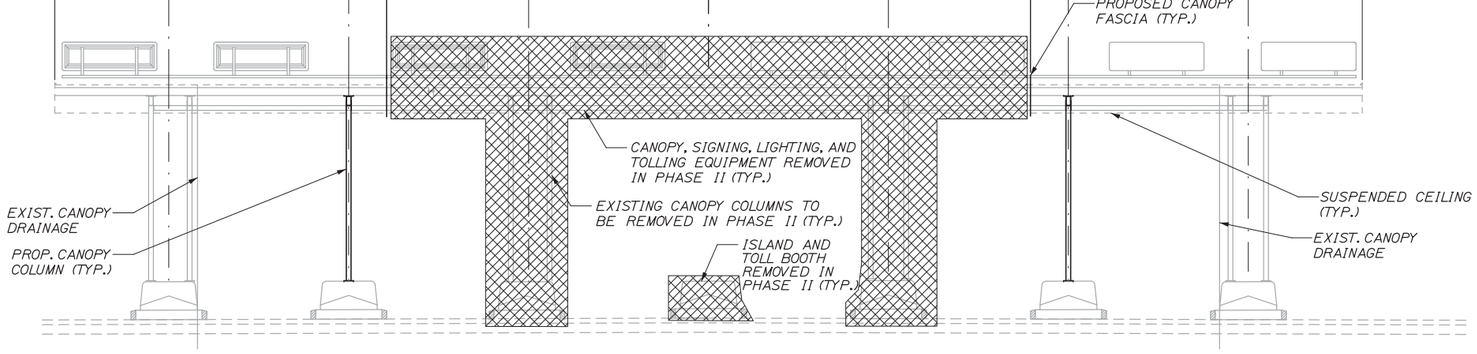

ELEVATION

SCALE: ⅛" = 1'-0"

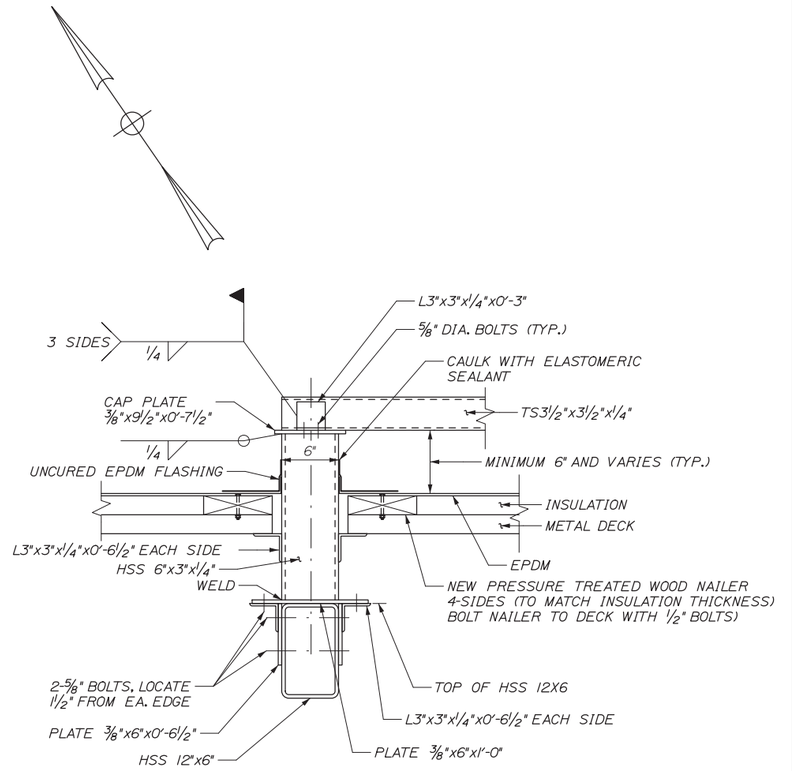

CANOPY MOUNTED INTERIOR SIGN COLUMN SECTION

1½" = 1'-0"

NOTES:

1. FOR FASCIA FINISH DETAILS, SEE SHEET S-20.
2. PROPOSED CANOPY DRAINAGE PIPES AND CONNECTIONS WILL BE INCIDENTAL TO ITEM 800.30, TOLL PLAZA DEMOLITION AND RESTORATION. CONTRACTOR MAY REUSE EXISTING ROOF DRAIN WITH APPROVAL OF RESIDENT.
3. THE CONTRACTOR SHALL FIT ALL ENDS OF CANOPY SIGN SUPPORTS OPEN TO THE WEATHER WITH AN APPROPRIATE CAST ALUMINUM OR GALVANIZED CAST IRON CAP SECURED IN PLACE WITH SET SCREWS.
4. DURING PHASE II CANOPY TERMINATION SHALL BE SEALED TO PREVENT MOISTURE PENETRATION.
5. THE CONTRACTOR SHALL ENSURE THAT RUNOFF OF THE CANOPY DURING PHASE II IS NOT DIRECTED ONTO TRAFFIC, BOOTHS, OR WALKWAYS.
6. CANOPY SUSPENDED CEILING AND FASCIA NOT SHOWN. THE CONTRACTOR WILL NEED TO REMOVE PORTIONS OF THE SUSPENDED CEILING IN ORDER TO COMPLETE THIS WORK. THE MTA RECOMMENDS REMOVING THE SUSPENDED CEILING IN LANES 3 AND 6 TO INSTALL THE COLUMNS ON ISLANDS B AND F, SO THAT REINSTALLATION OF THE SUSPENDED CEILING IS NOT REQUIRED.
7. PROVIDE A #2/0 LIGHTNING PROTECTION SYSTEM BARE COPPER GROUND DOWN CONDUCTOR IN A 1-1/2" SCHEDULE 80 PVC CONDUIT AT OPPOSITE CORNERS OF EACH OF THE REMAING CANOPY SECTIONS. TERMINATE THE DOWN CONDUCTORS WITH A 3/4" X 10' COPPER CLAD STEEL GROUND ROD (UL 467 LABELED).
8. WHERE EXISTING LIGHTNING PROTECTION CONDUCTORS ARE CUT AS PART OF DEMOLITION ACTIVITIES, RECONNECT EXISTING AIR TERMINALS WITH #2/0 AWG BARE COPPER WIRING.
9. DAMAGED OR MISSING FASCIA ON CANOPY TO REMAIN SHALL BE REPLACED WITH FASCIA REMOVED WITH CANOPY DEMOLITION.
10. CONTRACTOR TO SALVAGE STRUCTURAL STEEL FROM CANOPY DEMOLITION AND DELIVER TO CROSBY MAINTENANCE. REMOVAL OF OF STRUCTURAL STEEL SHALL BE COMPLETED BY UNBOLTING.

Date:2/13/2015

Filename: 093_S_Existing Canopy Modifications.dgn

Scale:				Designed by: HNTB	HNTB CORPORATION 340 County Road, Suite 6-C Westbrook, ME 04092 TEL (207) 774-5155 FAX (207) 228-0909	MAINE TURNPIKE	WEST GARDINER BARRIER TOLL PLAZA ORT CONVERSION
No.	Revision	By	Date				CANOPY MODIFICATIONS
				CONSULTANT PROJECT MANAGER: R. Bruce Munger, P.E.		THE GOLD STAR MEMORIAL HIGHWAY	SHEET NUMBER: S-18
				By Date / By Date			CONTRACT:2015.11 93 OF 118
				Designed GLS 02/15 / Checked AJF 02/15		MTA PROJECT MANAGER: William Yates	
				Drawn MPC 02/15 / In Charge of RAL 02/15			

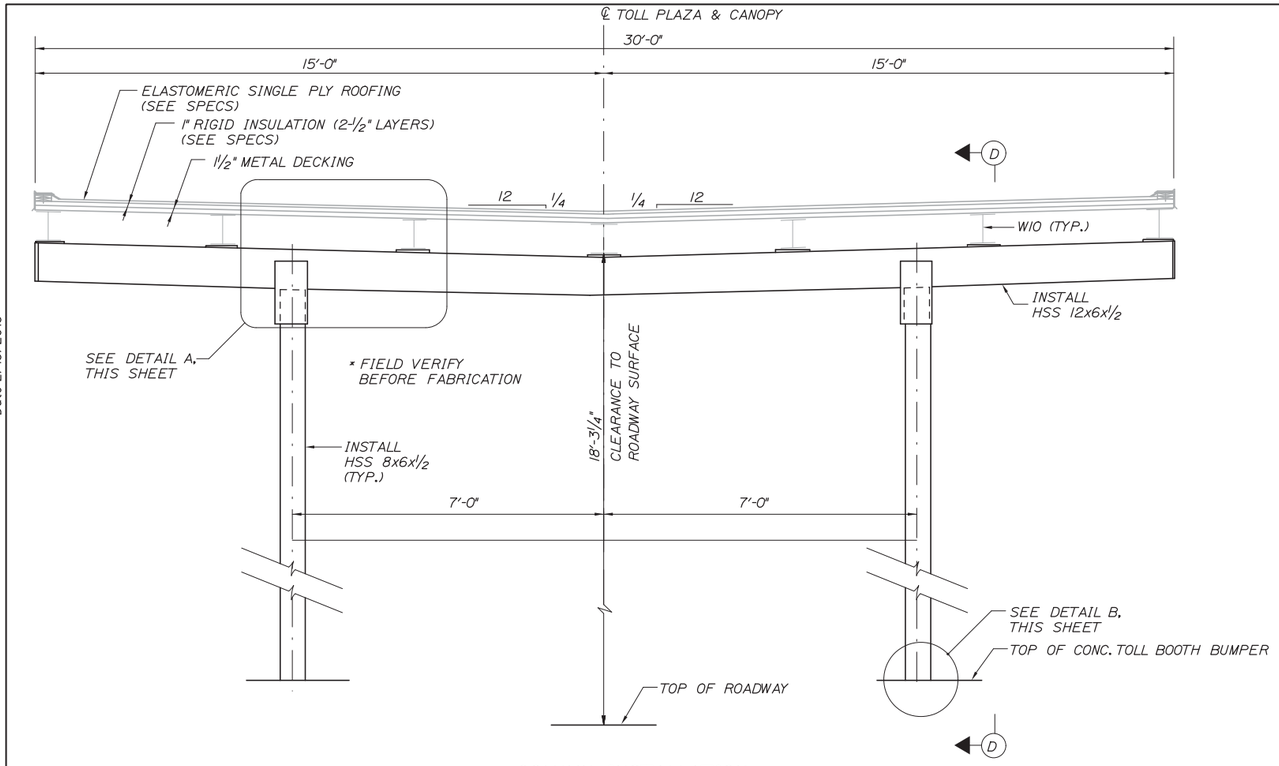

COLUMN INSTALLATION
N.T.S.

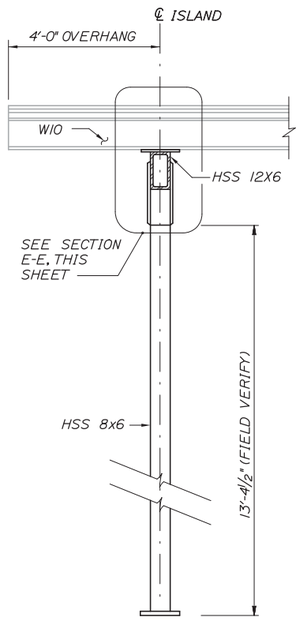

SECTION D-D (NB)
(SB SIMILAR)
1/2" = 1'-0"

NOTES:

1. INSTALL SHIMS AS NEEDED BETWEEN TOP OF EXISTING CANOPY C10X15.3 BEAMS AND THE UNDERSIDE OF PROPOSED CANOPY FRAMING. SHIMS WILL BE REQUIRED TO COMPENSATE FOR VARIATIONS IN CANOPY ELEVATION DUE TO DIFFERENTIAL DEFLECTIONS BETWEEN THE NEW AND EXISTING CANOPY AND FOR FABRICATION AND ERECTION TOLERANCES. SHIM THICKNESS MAY VARY BY UP TO 2" AT EACH LOCATION. SHIMS MAY BE INSTALLED UNCOATED AND THEN FIELD PAINTED WITH AN APPROVED COLD GALVANIZING COMPOUND. ALL COATINGS SHALL BE APPLIED IN STRICT ACCORDANCE WITH THE MANUFACTURER'S SPECIFICATIONS.

2. ANCHOR BOLTS SHALL BE INSTALLED IN ACCORDANCE WITH ANCHOR BOLT ADHESIVE MANUFACTURER'S SPECIFICATIONS AND INSTALLATION REQUIREMENTS.

3. GROUT LEVELING PAD SHALL BE AN APPROVED HIGH -STRENGTH NON SHRINK GROUT.

4. ALL LABOR, MATERIALS, AND INCIDENTALS SHALL BE PAID FOR UNDER ITEM 800.30.

5. SEE SPECIAL PROVISION 506 FOR STRUCTURAL STEEL PAINTING REQUIREMENTS.

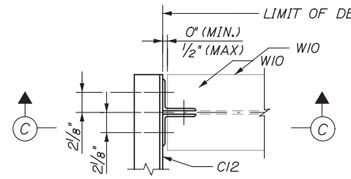

DETAIL C (FROM S-18)
N.T.S.

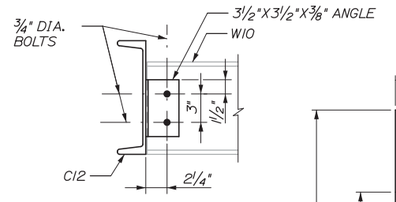

SECTION C-C
N.T.S.

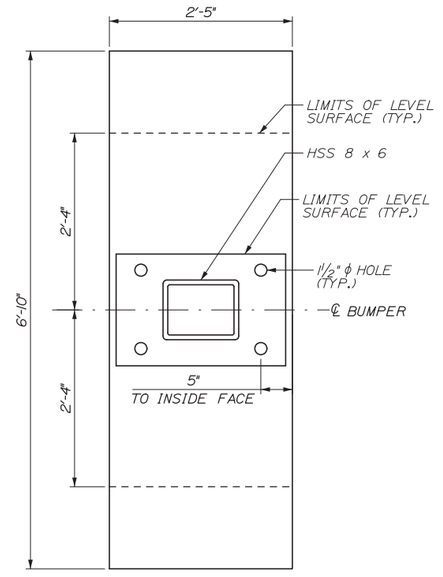

COLUMN LOCATION ON BUMPER
1 1/2" = 1'-0"

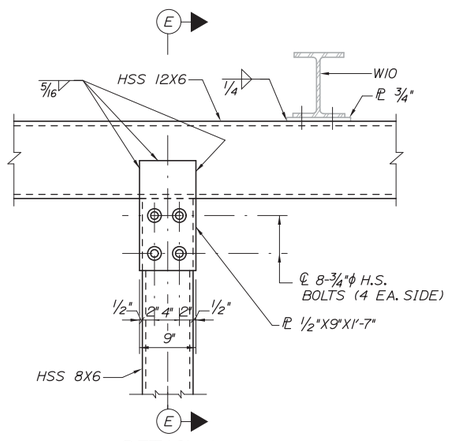

DETAIL A
1" = 1'-0"

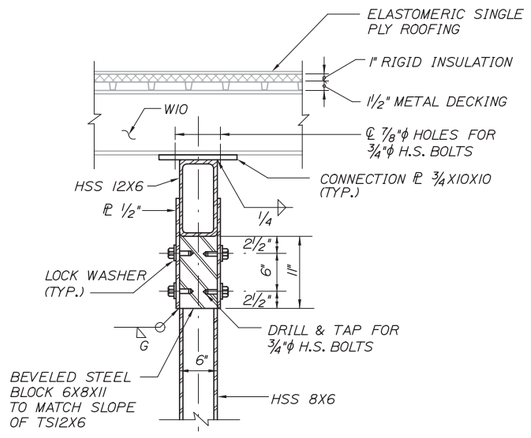

SECTION E-E
1" = 1'-0"

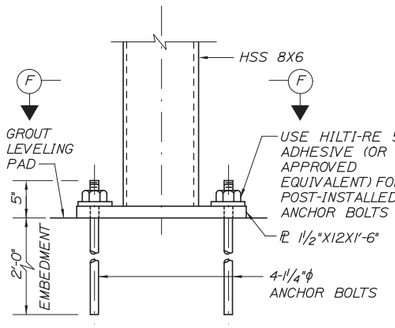

DETAIL B
1 1/2" = 1'-0"

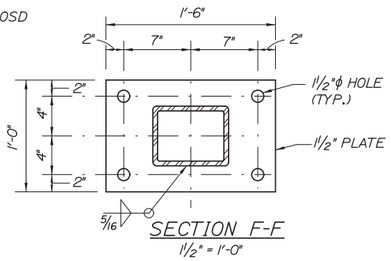

SECTION F-F
1 1/2" = 1'-0"

Scale:				Designed by: HNTB					
No.	Revision	By	Date	CONSULTANT PROJECT MANAGER: R. Bruce Munger, P.E.					
					By	Date		By	Date
				Designed	GLS	02/15	Checked	AJF	02/15
				Drawn	MPC	02/15	In Charge of	RAL	02/15

HNTB CORPORATION
340 County Road, Suite 6-C
Westbrook, ME 04092
TEL (207) 774-5155
FAX (207) 228-0909

MAINE TURNPIKE

THE GOLD STAR MEMORIAL HIGHWAY

MTA PROJECT MANAGER: William Yates

WEST GARDINER BARRIER TOLL PLAZA ORT CONVERSION

CANOPY FRAMING INSTALLATION

SHEET NUMBER: S-19

CONTRACT:2015.11

Date:2/13/2015

Filename: 094_S_Canopy Column Installation.dgn

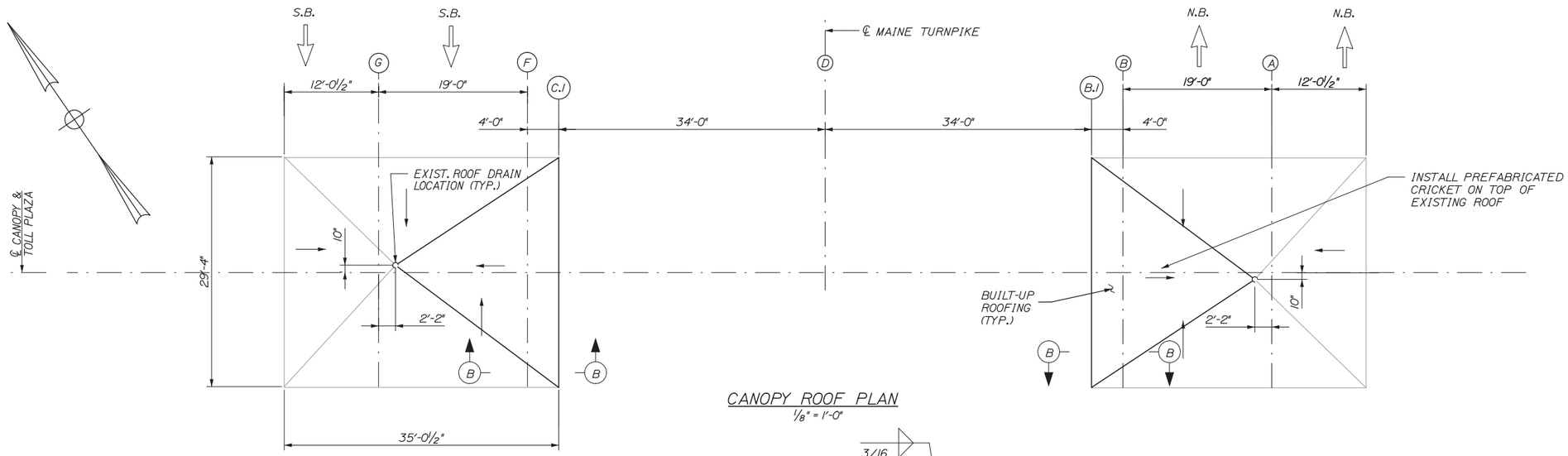

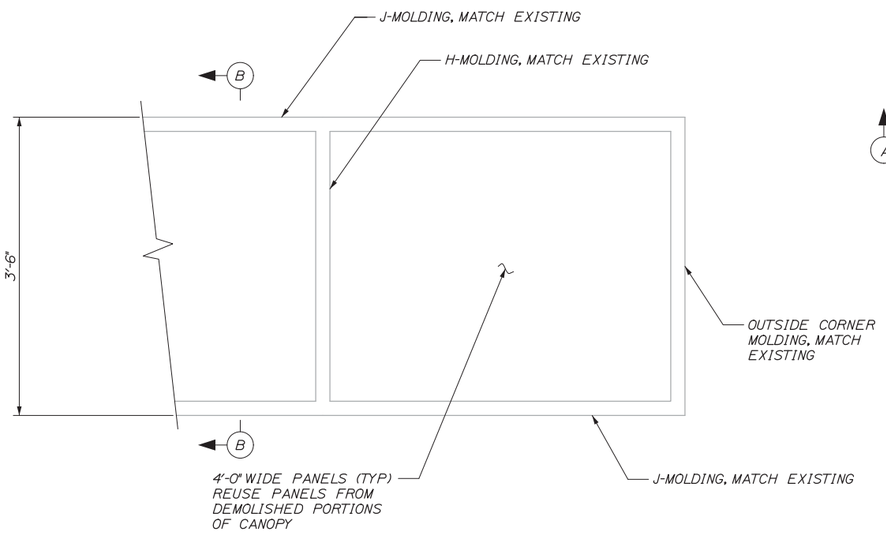

PARTIAL ELEVATION OF CANOPY FASCIA
NTS

CANOPY ROOF PLAN
1/8" = 1'-0"

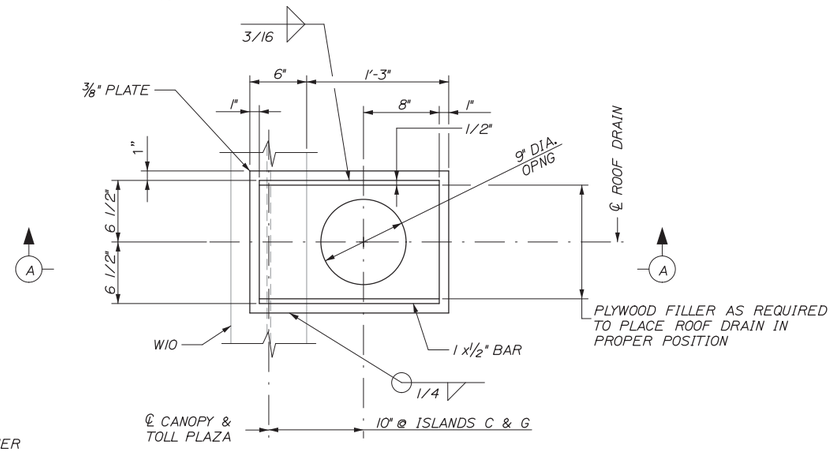

EXISTING ROOF DRAIN PLAN
NTS

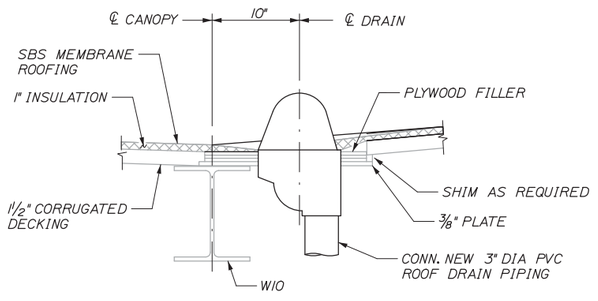

SECTION A - A
NTS

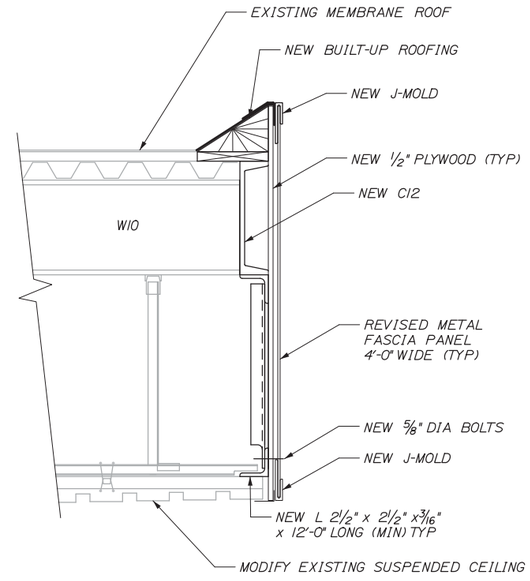

SECTION B - B
NTS

NOTES:

1. MINIMUM ROOF PITCH SHALL NOT BE LESS THAN 1/8" PER FOOT.
2. RESEAL ALL EXISTING ROOF SEAMS.
3. CANOPY DRAINAGE MODIFICATIONS, PREFABRICATED CRICKETS, AND RESEALING ALL ROOF SEAMS SHALL BE INCIDENTAIL TO ITEM 800.30 TOLL PLAZA DEMOLITION AND RESTORATION.
4. ALL CANOPY ROOF SYSTEM WORK SHALL BE PERFORMED BY A MANUFACTURER'S CERTIFIED INSTALLER.

Date:2/13/2015

Filename: 095_S_Canopy Roofing Details.dgn

Scale:

No.	Revision	By	Date

Designed by: HNTB

CONSULTANT PROJECT MANAGER: R. Bruce Munger, P.E.

	By	Date		By	Date
Designed	GLS	02/15	Checked	AJF	02/15
Drawn	MPC	02/15	In Charge of	RAL	02/15

HNTB CORPORATION
340 County Road, Suite 6-C
Westbrook, ME 04092
TEL (207) 774-5155
FAX (207) 228-0909

MAINE TURNPIKE

THE GOLD STAR MEMORIAL HIGHWAY

MTA PROJECT MANAGER: William Yates

WEST GARDINER BARRIER TOLL PLAZA ORT CONVERSION

CANOPY ROOFING DETAILS

SHEET NUMBER: S-20

CONTRACT:2015.11

Date:2/13/2015

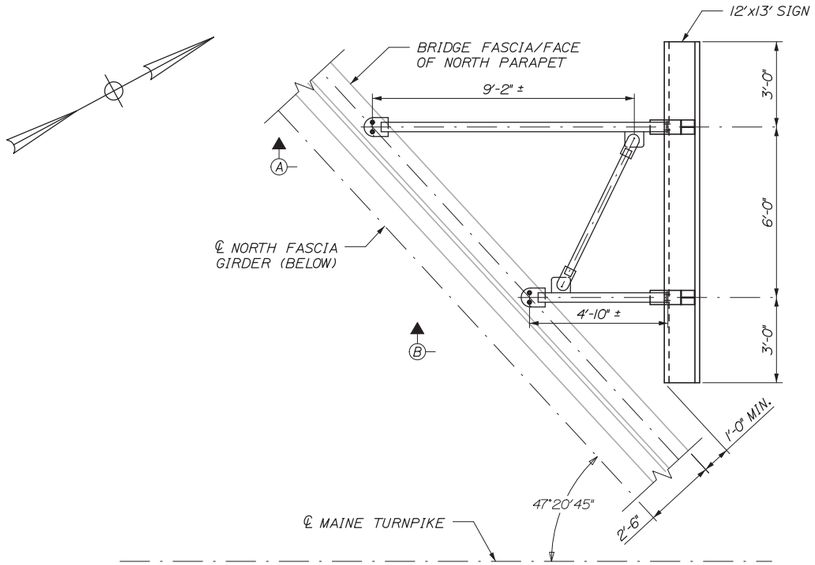

PLAN - TOP CHORD BRACING
(BOTTOM CHORD LATERAL BRACING SIMILAR)
3/8" = 1'-0"

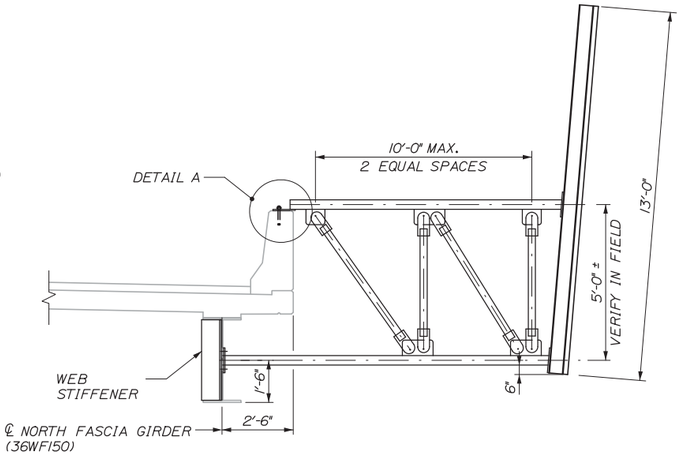

SECTION A-A
N.T.S.

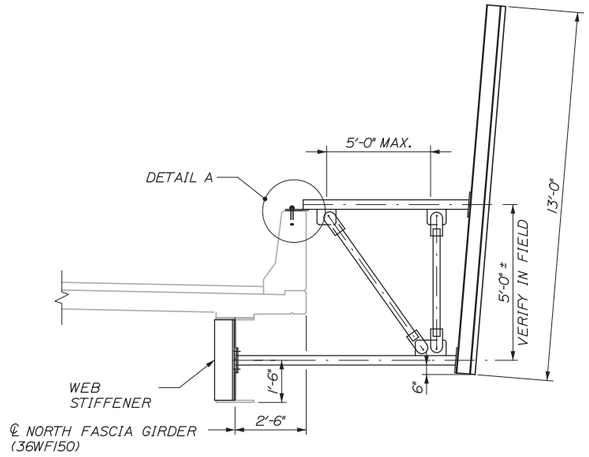

SECTION B-B
N.T.S.

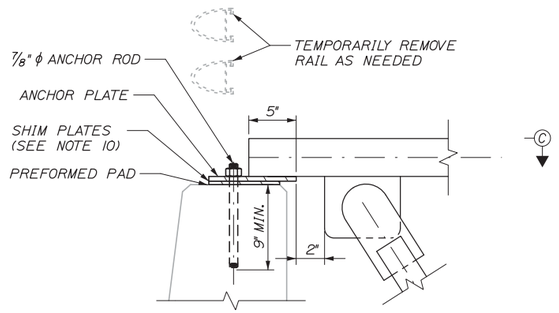

DETAIL A
1 1/2" = 1'-0"

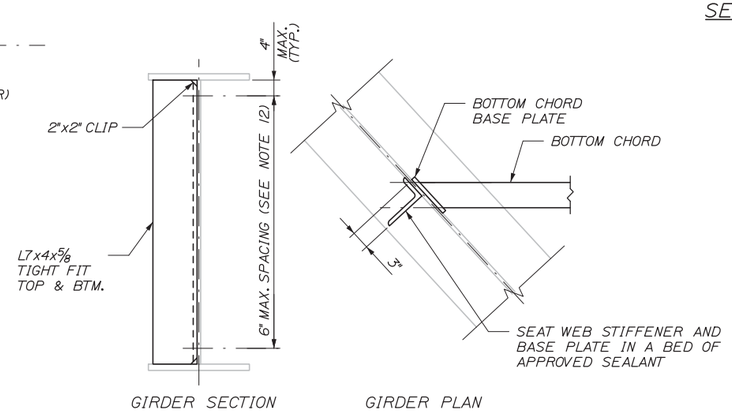

WEB STIFFENER DETAIL
1" = 1'

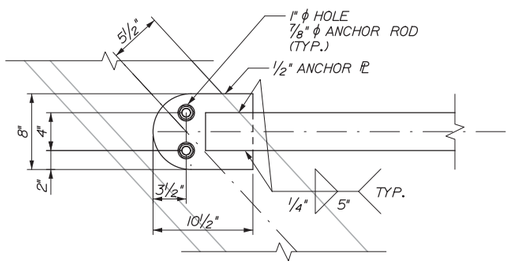

SECTION C-C
(ANCHOR ℄ SHOWN, SHIM ℄ SHALL BE SIMILAR)
1 1/2" = 1'-0"

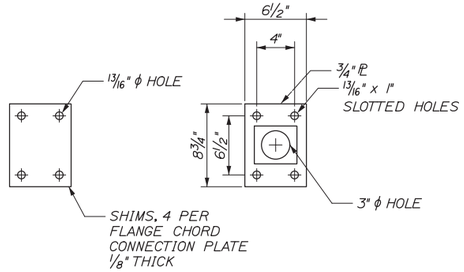

BOT. CHORD BASE PLATE DETAIL
(USE IN PLACE OF BASE PLATE DETAIL IN STANDARD DETAILS, SHEET 645(16))
1 1/2" = 1'-0"

NOTES:

1. EXISTING ALUMINUM BRIDGE RAILING NOT SHOWN FOR CLARITY. IF ANY CONFLICTS WITH BRIDGE RAILING POSTS OCCUR THE CONTRACTOR MAY SHIFT THE LOCATION OF THE SIGNS ± 1'-0" TO AVOID THE CONFLICT.
2. TWO SIGN SUPPORTS SHALL BE FABRICATED AND INSTALLED ON THE ROUTE 126 BRIDGE BASED ON THE DETAILS PRESENTED AND THE MAINEDOT STANDARD DETAILS. SEE SHEET SS-11 FOR SPECIFIC SIGN INFORMATION AND PLACEMENT ON THE BRIDGE. ONE SIGN SHALL BE CENTERED OVER THE SOUTHBOUND TRAVEL LANE AND ONE SHALL BE CENTERED OVER THE SOUTHBOUND PASSING LANE.
3. FOR DETAILS NOT SHOWN SEE MAINEDOT STANDARD DETAILS 645(12) THROUGH 645(17) AND 645(20). FOR ADDITIONAL NOTES SEE MAINEDOT STANDARD DETAILS 645(22) AND 645(23).
4. ALL ANCHOR RODS SHALL BE 7/8" DIAMETER ASTM F1554, GR 55. ANCHOR RODS AND RELATED HARDWARE SHALL BE HOT DIP GALVANIZED AFTER FABRICATION
5. ALL ANCHOR RODS SHALL BE ANCHORED IN PLACE USING A MATERIAL LISTED ON THE MAINEDOT QUALIFIED PRODUCTS LIST OF CONCRETE ADHESIVE ANCHOR SYSTEMS. CEMENTITIOUS ANCHORING MATERIALS ARE NOT PERMITTED. EMBEDMENT LENGTH SHALL BE SUFFICIENT TO DEVELOP THE TENSILE YIELD STRENGTH OF THE ANCHOR ROD.
6. ALL STEEL PLATES SHALL BE A MINIMUM OF 5/16" THICK AND SHALL MEET THE REQUIREMENTS OF ASTM A572, GRADE 50, UNLESS OTHERWISE NOTED.
7. HOLLOW STEEL SECTIONS SHALL BE A MINIMUM OF 5/16" THICK AND SHALL MEET THE REQUIREMENTS OF ASTM A500, GRADE B.
8. ALL SIGN SUPPORT COMPONENTS SHALL BE HOT DIP GALVANIZED AFTER FABRICATION.
9. HOLES THAT ARE FIELD DRILLED THROUGH GALVANIZED COMPONENTS SHALL HAVE AREAS OF DAMAGED GALVANIZED COATING REPAIRED IN ACCORDANCE WITH ASTM A780.
10. THE CONTRACTOR SHALL FURNISH SHIM PLATES FOR USE AT THE TOP OF PARAPET CONNECTIONS AND BOTTOM CHORD BASE PLATE AS REQUIRED. APPROXIMATELY FOUR 1/8" THICK SHIM PLATES AT EACH LOCATION IS SUGGESTED.
11. FOLLOWING INSTALLATION THE ANNULAR SPACE BETWEEN THE ANCHOR RODS, SHIM PLATES AND ANCHOR PLATES SHALL BE COMPLETELY FILLED USING A MATERIAL SELECTED FROM THE MAINEDOT QUALIFIED PRODUCTS LIST OF CHEMICAL ANCHORING MATERIALS. THIS WORK SHALL BE DONE PRIOR TO INSTALLING THE NUTS AND WASHERS FOR THE ANCHOR RODS AND SHALL BE INCIDENTAL TO THE RELATED CONTRACT ITEM.
12. HOLES FOR CONNECTING WEB STIFFENER TO GIRDER WEB SHALL BE FIELD LOCATED AND DRILLED ONCE THE LOCATION OF THE BOTTOM CHORD CONNECTION PLATE BOLTS HAVE BEEN ESTABLISHED. THE PROPOSED HOLE LOCATION AND SPACING SHALL BE VERIFIED BY THE RESIDENT PRIOR TO DRILLING.
13. ANCHORING EYELETS AS SHOWN IN THE STANDARD DETAILS ARE NOT REQUIRED.

Filename: 096_BridgeMountedSignSupport.dgn

Scale:

No.	Revision	By	Date

Designed by:

HNTB

CONSULTANT PROJECT MANAGER: R. Bruce Munger, P.E.

	By	Date		By	Date
Designed	KEB	02/15	Checked	AJF	02/15
Drawn	KEB	02/15	In Charge of	RAL	02/15

HNTB CORPORATION
340 County Road, Suite 6-C
Westbrook, ME 04092
TEL (207) 774-5155
FAX (207) 228-0909

MAINE TURNPIKE

THE GOLD STAR MEMORIAL HIGHWAY

MTA PROJECT MANAGER: William Yates

WEST GARDINER BARRIER TOLL PLAZA ORT CONVERSION

ROUTE 126

BRIDGE MOUNTED SIGN SUPPORT

SHEET NUMBER: S-21

CONTRACT:2015.11

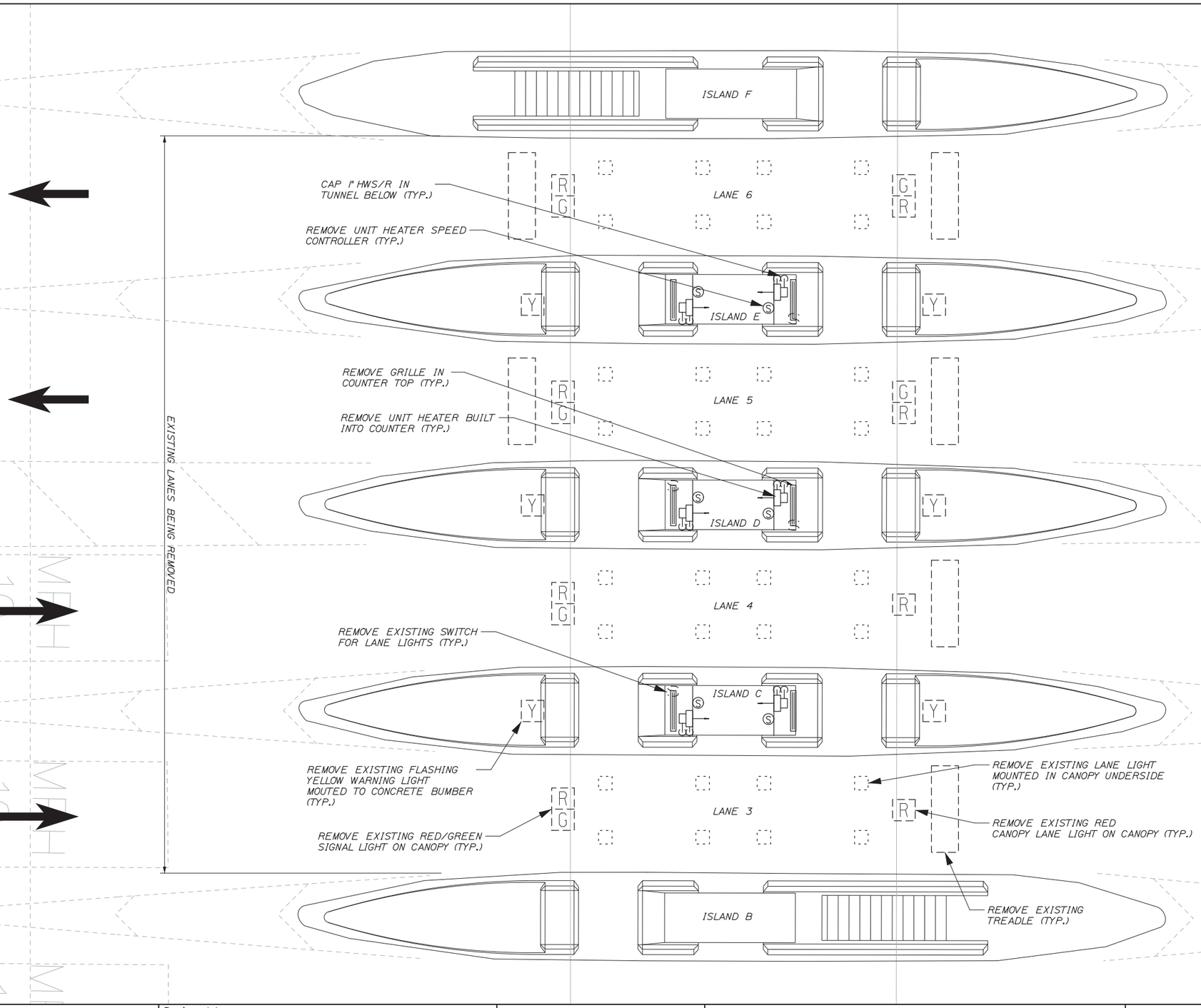

NOTES:

1. BEFORE ELECTRICAL AND MECHANICAL DEMOLITION, CONTRACTOR SHALL SUBMIT A DEMOLITION PLAN TO THE RESIDENT FOR APPROVAL.

2. DEMOLITION CANNOT BEGIN WITHOUT APPROVAL FROM THE SYSTEM INTEGRATOR AND THE RESIDENT.

3. REFER TO THE GENERAL NOTES FOR SALVAGE AND DISPOSAL INSTRUCTIONS OF SPECIFIC ITEMS. ITEMS TO BE DISPOSED OF MUST BE DONE SO IN A LEGAL LAWFUL MANNER BY THE CONTRACTOR.

4. REMOVE ALL EXISTING TOLL EQUIPMENT TO BE SALVAGED, DISPOSED OF AND/OR RELOCATED AS DIRECTED BY THE RESIDENT OR INDICATED ON THE DRAWINGS.

5. EQUIPMENT TO BE SALVAGED SHALL BE CAREFULLY PACKED AND DELIVERED TO THE SIGN SHOP OR TRANSCORE'S WAREHOUSE AS DESCRIBED IN THE GENERAL NOTES.

6. ANY EXISTING WORK DISTURBED OR DAMAGED BY THE ALTERATIONS OR NEW WORK SHALL BE REPAIRED OR REPLACED TO THE RESIDENT'S AND AUTHORITY'S SATISFACTION AT NO ADDED COST TO THE AUTHORITY AND DISPOSED OF IN A LEGAL LAWFUL MANNER BY THE CONTRACTOR.

7. ANY EXISTING WIRING AND CONDUIT DISCONTINUED UNDER THIS PROJECT SHALL BE COMPLETELY REMOVED AND BECOME THE PROPERTY OF THE CONTRACTOR.

8. SEE ELECTRICAL DETAILS FOR EQUIPMENT IN TUNNEL.

9. PRIOR TO DEMO OF ISLANDS C & E THE CONTRACTOR SHALL VERIFY ALL COMMUNICATION AND POWER LINES IN PLAZA ROOF COLUMNS FOR ISLANDS C & E. THE CONTRACTOR SHALL SUBMIT FOR REVIEW A LINE DIAGRAM OF ALL DATA, POWER AND ANY OTHER LINES IN ISLANDS C & E COLUMNS SHOWING ORIGIN AND DESTINATION. LINES ASSOCIATED WITH EQUIPMENT TO REMAIN (INCLUDING EQUIPMENT REQUIRED TO BE OPERATING FOR INTERMEDIATE PHASES OF CONSTRUCTION) SHALL BE RE-ROUTED. THIS WORK SHALL BE COORDINATED WITH THE RESIDENT, THE AUTHORITY, AND THE SYSTEM INTEGRATOR. WORK ASSOCIATED WITH VERIFICATION AND SUBMITTAL REVIEW SHALL BE INCIDENTAL TO ITEM 800.10. WORK ASSOCIATED WITH RE-ROUTING WIRES WILL BE PAID FOR BY THE INDIVIDUAL LABOR AND MATERIAL PAY ITEMS.

10. PRIOR TO BOILER SHUT OFF FOR HEAT PIPING DEMOLITION, THE CONTRACTOR SHALL COORDINATE WITH THE AUTHORITY AND RESIDENT.

Date:2/13/2015

Filename: 097_ElectricalDemo.dgn

Scale:

No.	Revision	By	Date

Designed by: HNTB

CONSULTANT PROJECT MANAGER: R. Bruce Munger, P.E.

	By	Date		By	Date
Designed	LB	02/15	Checked	JC	02/15
Drawn	MPC	02/15	In Charge of	RAL	02/15

HNTB CORPORATION
340 County Road, Suite 6-C
Westbrook, ME 04092
TEL (207) 774-5155
FAX (207) 228-0909

MAINE TURNPIKE

THE GOLD STAR MEMORIAL HIGHWAY

MTA PROJECT MANAGER: William Yates

WEST GARDINER BARRIER TOLL PLAZA ORT CONVERSION

ELECTRICAL AND MECHANICAL DEMOLITION

SHEET NUMBER: E-01

CONTRACT:2015.11

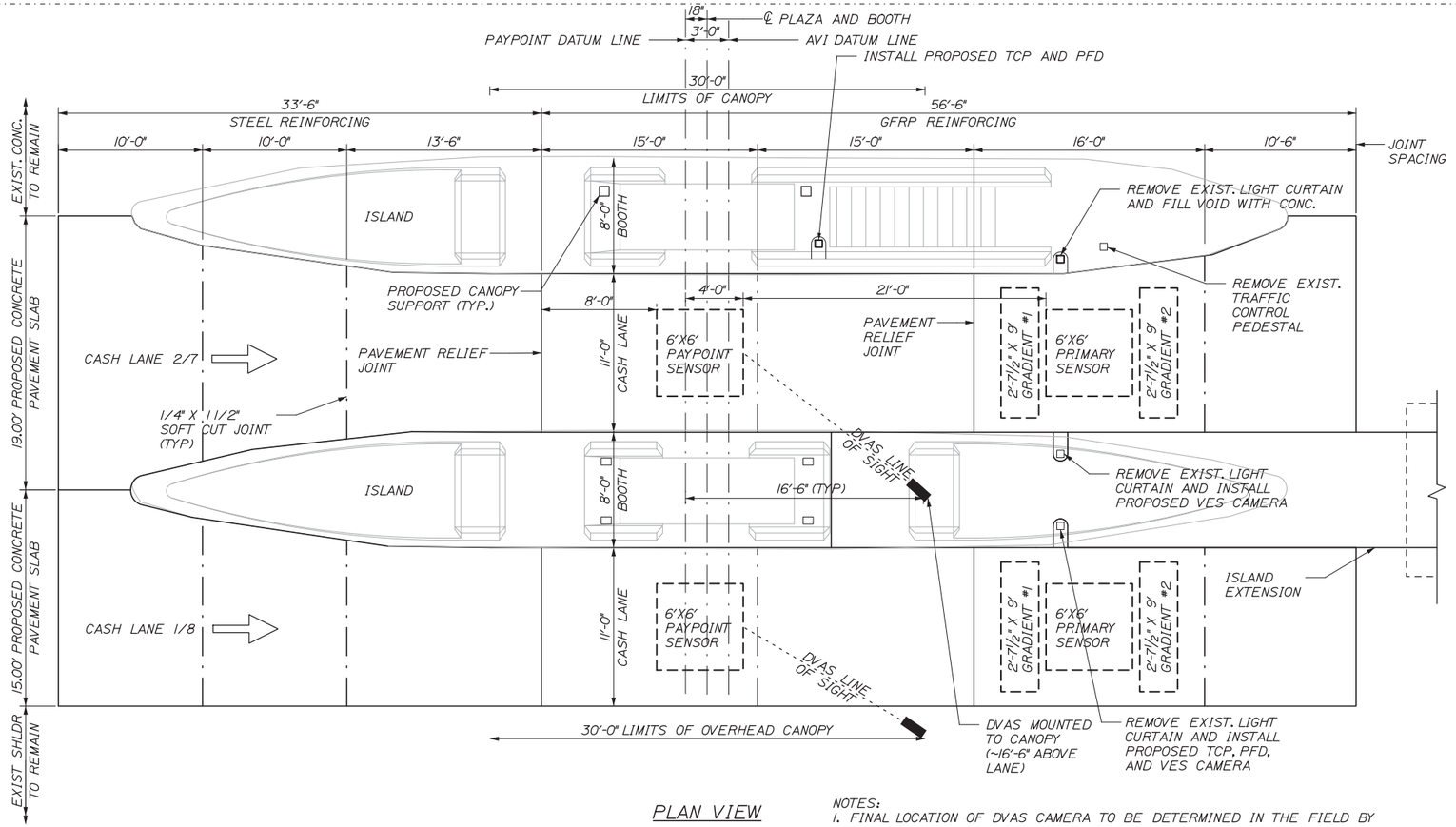

PLAN VIEW

NOTES:
1. FINAL LOCATION OF DVAS CAMERA TO BE DETERMINED IN THE FIELD BY THE AUTHORITY AND SYSTEM INTEGRATOR.
2. REFER TO ELECTRICAL PLANS FOR LOCATIONS OF LEAD-IN CUTS, CONDUIT, STUB UPS, AND JUNCTION BOXES.
3. LOCATION OF EXISTING TOLL EQUIPMENT WILL VARY BY LANE.
4. TRAFFIC CONTROL PEDESTALS AND SEPARATE VES CAMERA FOR LANES 2 AND 7 SHALL BE CONSIDERED A SINGLE UNIT FOR ITEM 655.07.

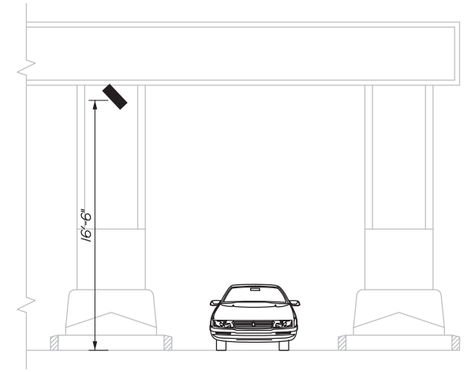

SECTION VIEW

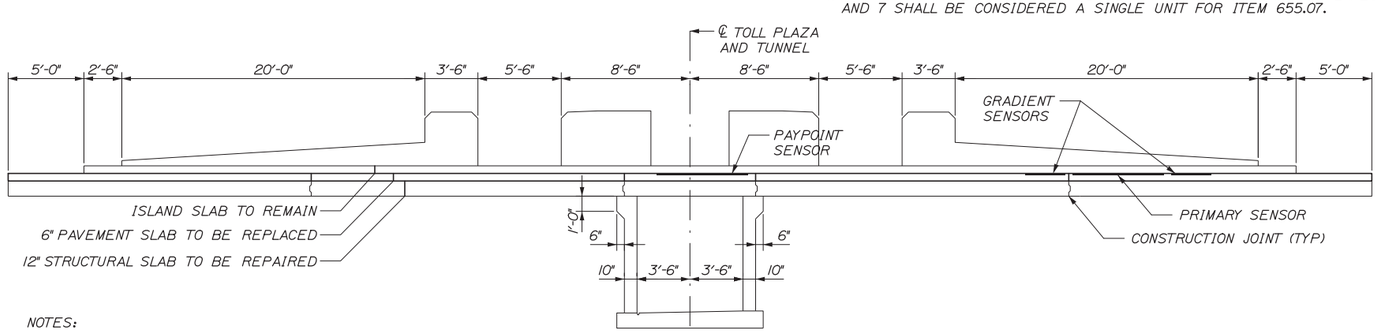

NOTES:

1. LOOPS SHALL BE PROVIDED BY TRANSCORE AND INSTALLED BY TRANSCORE.
2. SEE STRUCTURAL PLANS FOR ISLAND, SLAB AND JOINT DETAILS.

PROFILE VIEW

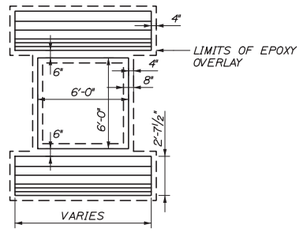

LOOP DETAIL AND EPOXY OVERLAY

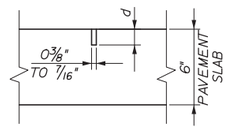

d = 1¼" TO 1½" FOR SINGLE LEAD CUT
d = 2½" FOR MULTIPLE LEAD CUT
d = 3" AT STUB UP ONLY

LEAD-IN CUT
SCALE: 2" = 1'

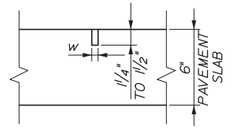

SENSOR CUT
SCALE: 2" = 1'

w = ½" FOR GRADIENT ENDS
⅜" FOR ALL OTHER CUTS

CONCRETE CUTTING NOTES:

1. TRANSCORE SHALL INJECT LOCTITE EPOXY INTO SAW CUT BEFORE INSTALLING SENSORS AND LEADS. TRANSCORE SHALL PROVIDE EQUIPMENT, TEMPLATES AND EPOXY. SEE SPECIAL PROVISIONS SECTION 655 FOR MORE INFORMATION.

No.	Revision	By	Date

Scale:

Designed by: HNTB

CONSULTANT PROJECT MANAGER: R. Bruce Munger, P.E.

	By	Date		By	Date
Designed	LB	02/15	Checked	JC	02/15
Drawn	MPC	02/15	In Charge of	RAL	02/15

HNTB CORPORATION
340 County Road, Suite 6-C
Westbrook, ME 04092
TEL (207) 774-5155
FAX (207) 228-0909

MAINE TURNPIKE

THE GOLD STAR MEMORIAL HIGHWAY

MTA PROJECT MANAGER: William Yates

WEST GARDINER BARRIER TOLL PLAZA ORT CONVERSION

CASH LANE TYPICAL SENSOR LAYOUT CASH LANES 1, 2, 7 & 8

SHEET NUMBER: E-02

CONTRACT:2015.11

Date:2/13/2015

Filename: 098_TypCashLaneSensorLayout.dgn

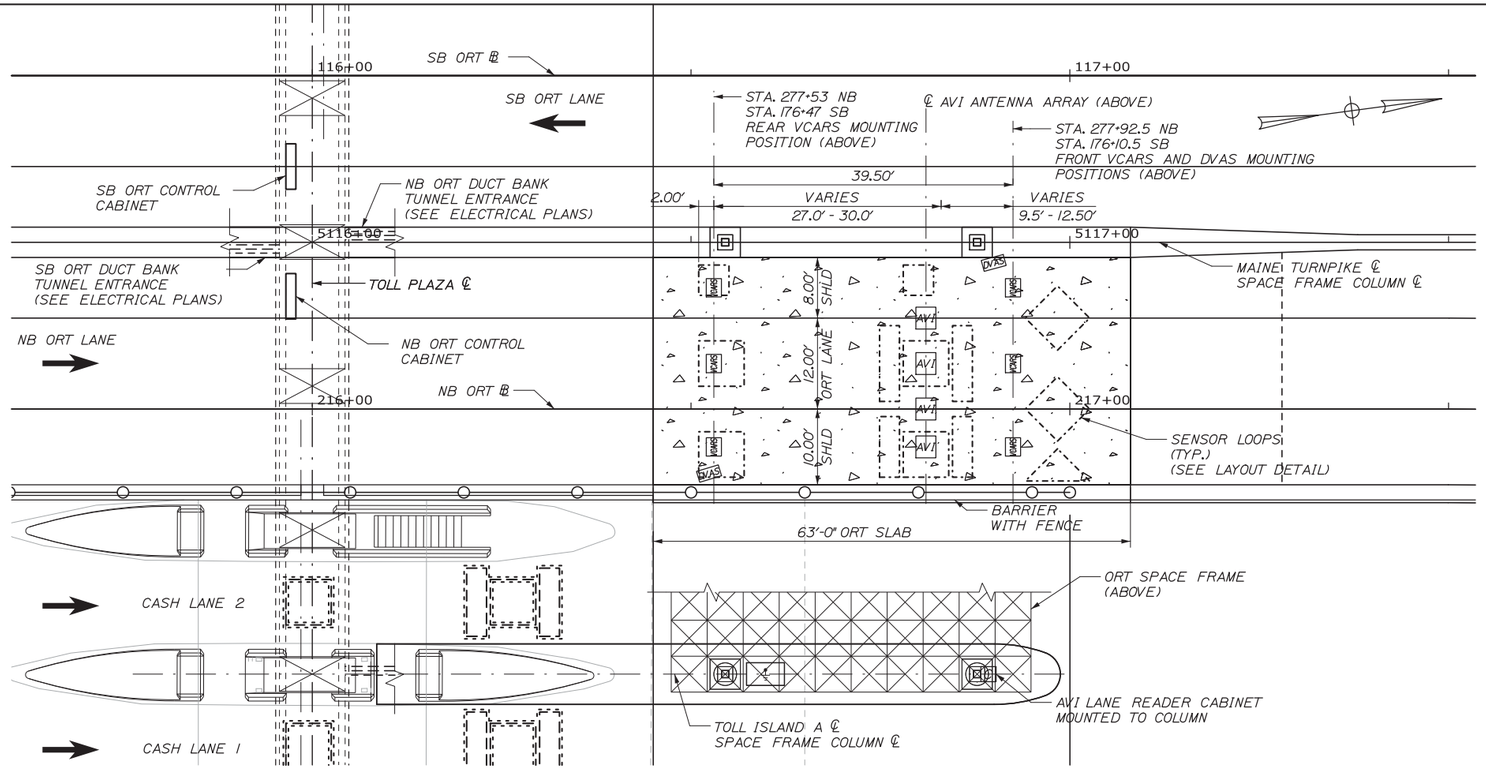

NB ORT PLAN
(SB ORT SIMILAR)

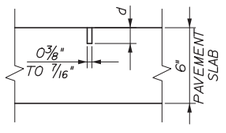

d = 1 1/4" TO 1 1/2" FOR SINGLE LEAD CUT
d = 2 1/2" FOR MULTIPLE LEAD CUT
d = 3" AT STUB UP ONLY

LEAD-IN CUT
SCALE: 2" = 1'

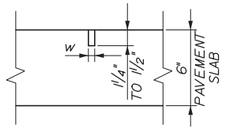

SENSOR CUT
SCALE: 2" = 1'

w = 1/2" FOR GRADIENT ENDS
7/8" FOR ALL OTHER CUTS

CONCRETE CUTTING NOTES:

1. TRANSCORE SHALL INJECT LOCTITE EPOXY INTO SAW CUT BEFORE INSTALLING SENSORS AND LEADS. TRANSCORE SHALL PROVIDE EQUIPMENT, TEMPLATES AND EPOXY. SEE SPECIAL PROVISIONS SECTION 655 FOR MORE INFORMATION.

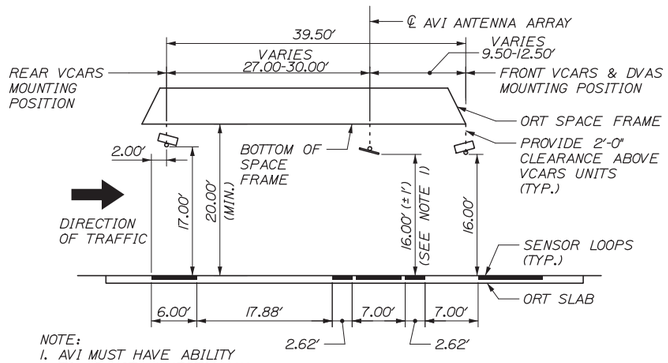

NOTE:
1. AVI MUST HAVE ABILITY TO ADJUST ±1' VERTICALLY.

NB PROFILE VIEW
(MIRROR FOR SB)

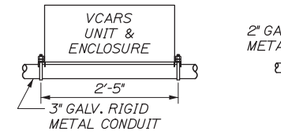

VCARS ELEVATION

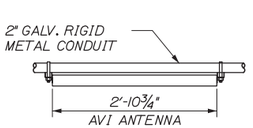

AVI ANTENNA ELEVATION

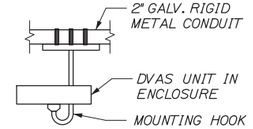

DVAS ELEVATION

NOTES:
1. REFER TO SPACE FRAME PLANS FOR MOUNTING ASSEMBLIES.
2. REFER TO ELECTRICAL PLANS FOR CONNECTIONS OF POWER AND COMMUNICATION LINES.
3. TRANSCORE WILL PROVIDE VCARS UNITS, ENCLOSURES AND MOUNTING KITS. THE CONTRACTOR SHALL INSTALL AND CONNECT UNITS TO POWER AND COMMUNICATIONS LINES.
4. THE MTA WILL PROVIDE AVI ANTENNAS. CONTRACTOR WILL PROVIDE NECESSARY CONNECTION HARDWARE AND CONNECT COMMUNICATION LINES.
5. TRANSCORE WILL PROVIDE DVAS UNITS, ENCLOSURES AND MOUNTING HOOKS. THE CONTRACTOR SHALL CONNECT POWER AND COMMUNICATION LINES.
6. TRANSCORE WILL PROVIDE IVIS SENSOR LOOPS EXCEPT FOR THE HALF DIAMOND SENSOR WHICH SHALL BE PROVIDED BY THE CONTRACTOR. REFER TO SPECIAL PROVISION 655 FOR MORE INFORMATION.
7. BOTH REAR AND FRONT VCARS MOUNTING POSITIONS ARE FIXED. THE AVI ANTENNA ARRAY SHALL HAVE THE ABILITY TO MOVE 3' LONGITUDINAL TO TRAFFIC.
8. EXISTING TOLL BOOTHS D, E & F AND PROPOSED SPACE FRAME FOUNDATIONS ARE NOT SHOWN FOR CLARITY.

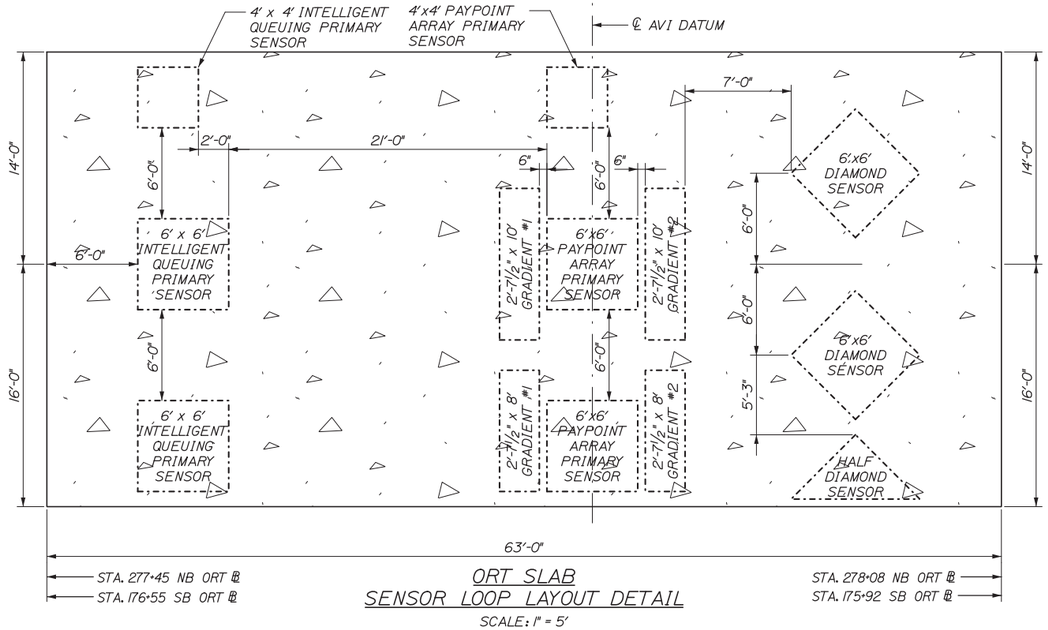

ORT SLAB
SENSOR LOOP LAYOUT DETAIL
SCALE: 1" = 5'

Date:2/13/2015

Filename: 099_ORTEquipmentLayout.dgn

No.	Revision	By	Date

Scale:

Designed by:

HNTB

CONSULTANT PROJECT MANAGER: R. Bruce Munger, P.E.

	By	Date		By	Date
Designed	LB	02/15	Checked	JC	02/15
Drawn	MPC	02/15	In Charge of	RAL	02/15

HNTB CORPORATION
340 County Road, Suite 6-C
Westbrook, ME 04092
TEL (207) 774-5155
FAX (207) 228-0909

MAINE TURNPIKE

THE GOLD STAR MEMORIAL HIGHWAY

MTA PROJECT MANAGER: William Yates

WEST GARDINER BARRIER TOLL PLAZA ORT CONVERSION

ORT EQUIPMENT LAYOUT

SHEET NUMBER: E-03

CONTRACT:2015.11

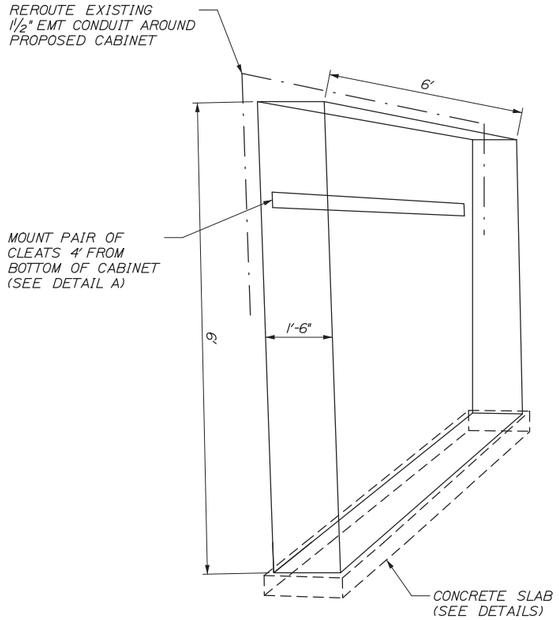

SOUTHBOUND ORT CONTROL CABINET

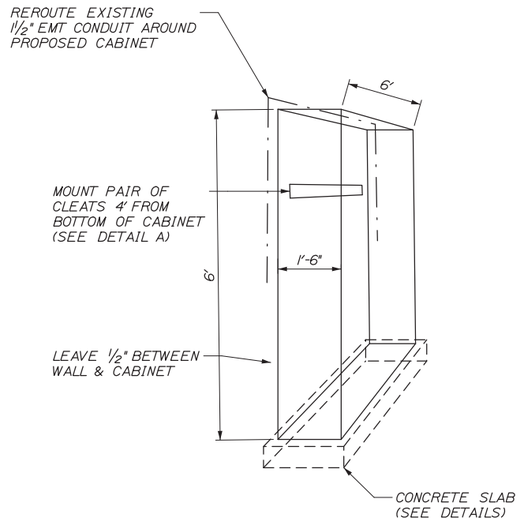

NORTHBOUND ORT CONTROL CABINET

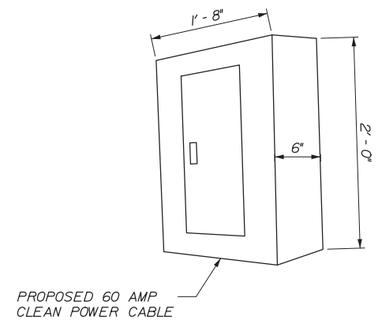

60 AMP CLEAN POWER PANEL BOARD

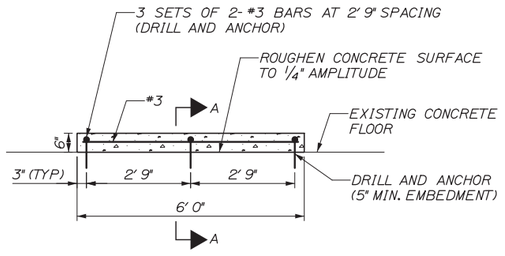

ELEVATION

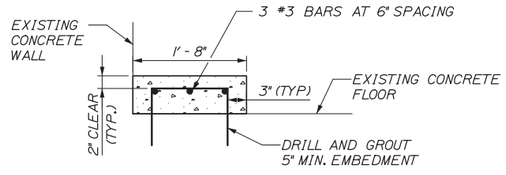

SECTION A-A

NOTE: ALL CORNERS SHALL BE CHAMFERED ¾".

CONCRETE SLAB DETAILS

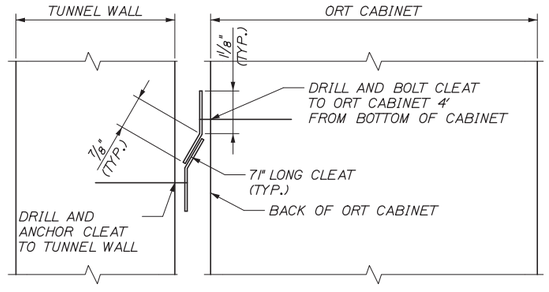

DETAIL A
ORT CABINET CLEATS

NOTES:
1. FINAL LOCATIONS OF ORT CABINETS AND 60 AMP CLEAN POWER PANEL BOARD SHALL BE DETERMINED BY THE RESIDENT.
2. PROPOSED CONDUIT AND WIREWAYS ARE NOT SHOWN. SEE ELECTRICAL DETAILS.
3. CONTRACTOR SHALL MOVE TRANSCORE PROVIDED ORT CONTROL CABINETS DURING PHASE 2 WHEN TUNNEL ACCESS IS AVAILABLE THROUGH EXPOSED ISLAND E BOOTH OPENING. EACH CABINET WILL CONTAIN SENSITIVE TOLLING EQUIPMENT AND WILL WEIGH AN ESTIMATED 900 POUNDS. THIS SHALL BE INCIDENTAL TO ITEM 655.01, MOUNTING AND INSTALLATION OF ORT LANE CONTROLLER CABINET.
4. CONSTRUCTION OF CONCRETE SLAB, MOVING ORT CABINETS TO FINAL LOCATIONS AND SECURING CABINETS WITH CLEATS TO TUNNEL WALL SHALL BE INCIDENTAL TO ITEM 655.01, MOUNTING AND INSTALLATION OF ORT LANE CONTROLLER CABINET.
5. THE CONTRACTOR SHALL PROTECT ORT CABINETS FROM DAMAGE.
6. TRANSCORE SHALL PROVIDE CONTRACTOR A PAIR OF CLEATS FOR EACH ORT CABINET. CLEATS WILL HAVE FIVE 3*8" HOLES PREDRILLED. CONTRACTOR SHALL ATTACH CLEATS TO TUNNEL WALL AND ORT CABINET BY METHOD APPROVED BY RESIDENT. SCREWS, BOLTS AND NUTS SHALL BE GALVANIZED.

Date:2/13/2015

Filename: 100_Cabinet Locations.dgn

Scale:			
No.	Revision	By	Date

Designed by: HNTB

CONSULTANT PROJECT MANAGER: R. Bruce Munger, P.E.

	By	Date		By	Date
Designed	LB	02/15	Checked	JC	02/15
Drawn	GLS	02/15	In Charge of	RAL	02/15

HNTB CORPORATION
340 County Road, Suite 6-C
Westbrook, ME 04092
TEL (207) 774-5155
FAX (207) 228-0909

MAINE TURNPIKE

THE GOLD STAR MEMORIAL HIGHWAY

MTA PROJECT MANAGER: William Yates

WEST GARDINER BARRIER TOLL PLAZA ORT CONVERSION

ORT CONTROL CABINET DETAILS

SHEET NUMBER: E-04

CONTRACT:2015.11

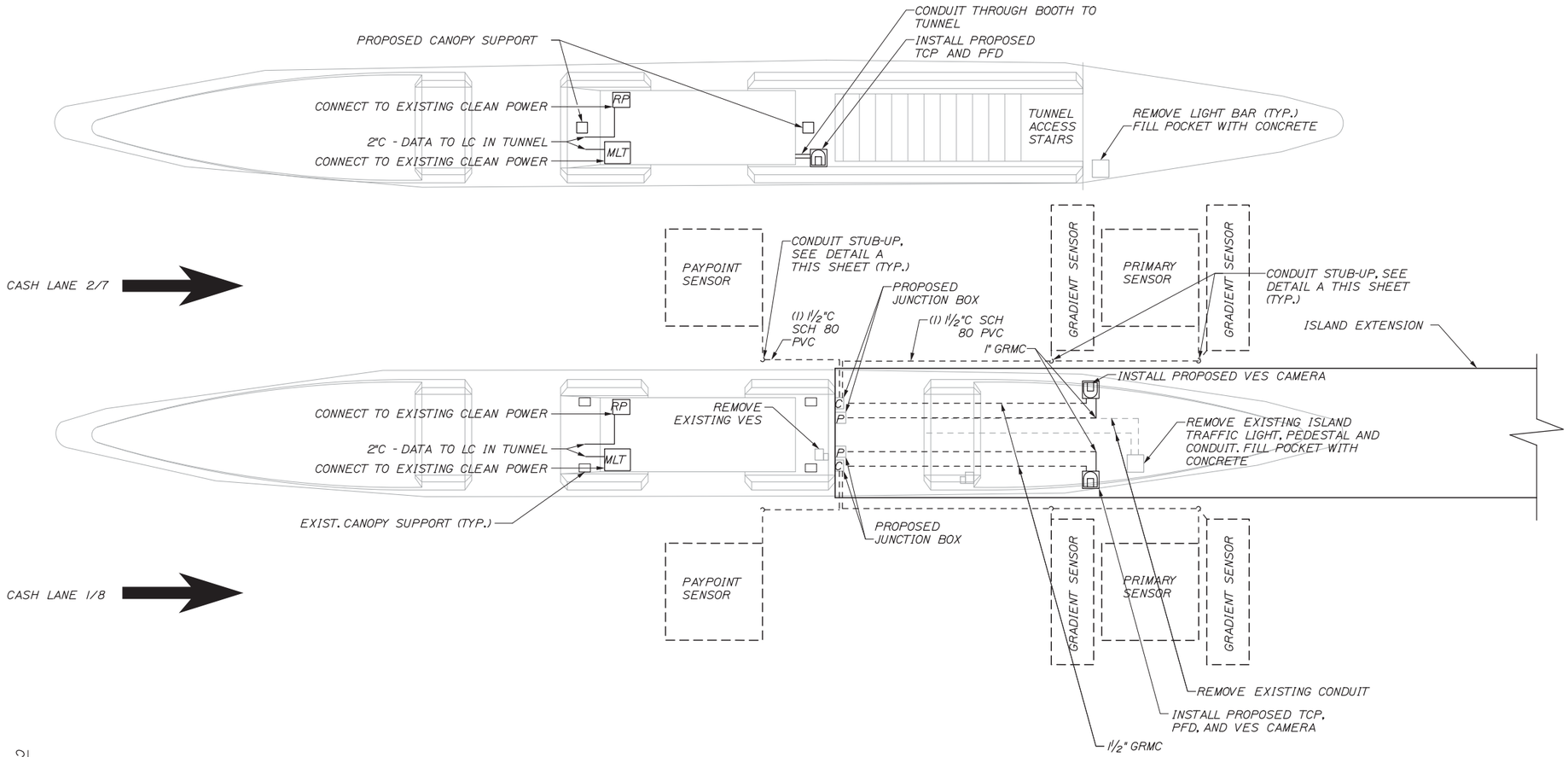

TYPICAL CASH LANES

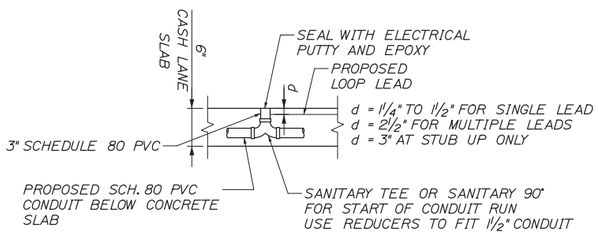

DETAIL A
STUB UP IN CASH LANE SLAB
SECTION VIEW

NOTE: SEALING STUB-UPS SHALL BE INCIDENTAL TO THE PVC PAY ITEM.

NOTES:

1. SEE GENERAL NOTES FOR ITEMS TO BE SUPPLIED BY MTA, TRANSCORE AND CONTRACTOR. SEE GENERAL NOTES FOR ITEMS TO BE SALVAGED.
2. SENSOR LOOP LOCATIONS ARE APPROXIMATE. SEE SHEET 9 FOR EXACT LOOP LOCATION.
3. BRIDGE LOOP LEAD WITH SMALL DIAMETER NON-METALLIC CONDUIT WHEN CROSSING A JOINT.
4. CONTRACTOR SHALL CONCEAL CONDUITS IN EXISTING CONCRETE.

NOTES CONTINUED:

5. THE TRAFFIC CONTROL PEDESTAL SHALL BE LOCATED AT LEAST 18" FROM THE CURB.
6. FIELD MODIFY EXISTING POWER AND CONTROL WIRING AS REQUIRED.
7. KLIK-ITS (POWER & TEL ENTERPRISE PART # C8820) OR APPROVED EQUIVALENT SHALL BE USED AT ALL LOOPWIRE SPLICE LOCATIONS.
8. DVAS CAMERAS ARE NOT SHOWN FOR CLARITY. POWER AND COMMUNICATION WIRING TO DVAS CAMERAS ARE FED FROM THE CANOPY.

Date:2/13/2015

Filename: 101_ElecPlan1.dgn

Scale:				Designed by: HNTB					
No.	Revision	By	Date	CONSULTANT PROJECT MANAGER: R. Bruce Munger, P.E.					
					By	Date		By	Date
				Designed	LB	02/15	Checked	JC	02/15
				Drawn	MPC	02/15	In Charge of	RAL	02/15

HNTB CORPORATION
340 County Road, Suite 6-C
Westbrook, ME 04092
TEL (207) 774-5155
FAX (207) 228-0909

MAINE TURNPIKE

THE GOLD STAR MEMORIAL HIGHWAY

MTA PROJECT MANAGER: William Yates

WEST GARDINER BARRIER TOLL PLAZA ORT CONVERSION

CASH LANE ELECTRICAL PLAN CASH LANES 1, 2, 7 & 8

SHEET NUMBER: E-05

CONTRACT:2015.11

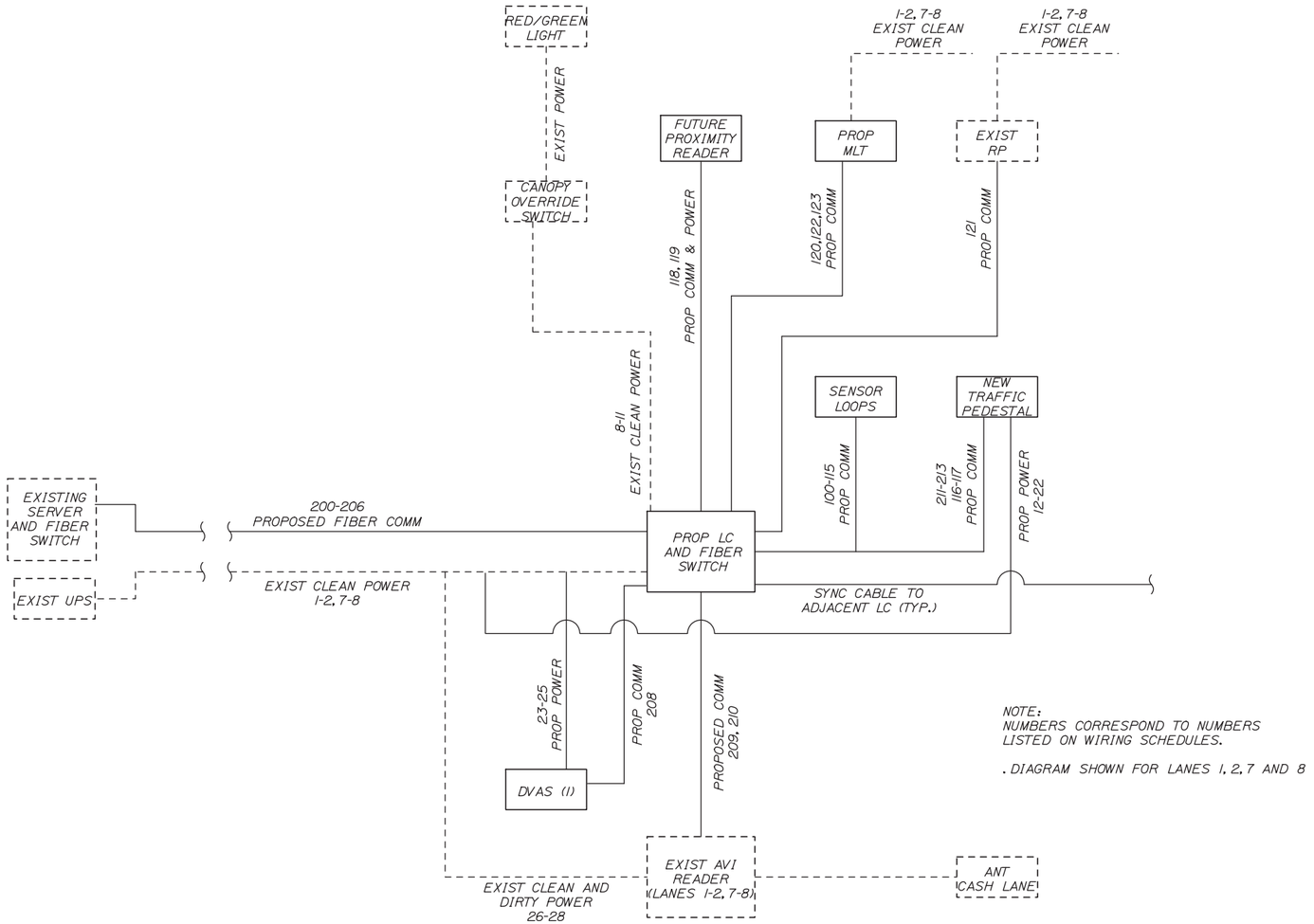

TOLLING EQUIPMENT SYSTEMS DIAGRAM

SCALE: NTS

Date:2/13/2015

Filename: 102_WiringDiagram.dgn

Scale:

No.	Revision	By	Date

Designed by: HNTB

CONSULTANT PROJECT MANAGER: R. Bruce Munger, P.E.

	By	Date		By	Date
Designed	GLS	02/15	Checked	AJF	02/15
Drawn	MPC	02/15	In Charge of	RAL	02/15

HNTB CORPORATION
340 County Road, Suite 6-C
Westbrook, ME 04092
TEL (207) 774-5155
FAX (207) 228-0909

MAINE TURNPIKE

THE GOLD STAR MEMORIAL HIGHWAY

MTA PROJECT MANAGER: William Yates

WEST GARDINER BARRIER TOLL PLAZA ORT CONVERSION

CASH LANE POWER & COMMUNICATIONS LINE DIAGRAM

SHEET NUMBER: E-06

CONTRACT:2015.11

CASH LANE POWER

WIRING SHOWN IS FOR TYPICAL CASH LANE. REPLICATE FOR SIMILAR LANES.

ATT/ETC LANE TYPE POWER WIRING SCHEDULE

	WIRE LABEL (SOURCE.CIRCUIT.DESTINATION)	DESCRIPTION	AWG	COLOR	CORE	JACKET	VOLTAGE	CIRCUIT BREAKER	FROM	TO	LANE SERVER TERMINAL #	TERMINATION REQUIREMENTS	TERMINATIONS	STATUS
	BOOTH QUAD OUTLET													
1	(LANE CONTROLLER) .L.BQUAD	PERIPHERAL POWER (HOT, NON-SWITCHED)	12	BLACK OR PER LOCAL CODE	STRANDED	THHW	120 VAC	20	EXISTING UPS	BOOTH QUAD OUTLET LOCATE WITHIN 3 FT OF ATTENDANT WORK AREA	N/A	INSTALL QUAD OUTLET	TUNNEL/POWER PANEL	NEW
2	(LANE CONTROLLER) .N.BQUAD	PERIPHERAL POWER (NEUTRAL)		WHITE									TUNNEL/POWER PANEL	NEW
3	(LANE CONTROLLER) .G.BQUAD	PERIPHERAL POWER (GROUND)		GREEN									TUNNEL/POWER PANEL	NEW
	LANE SERVER													
4	(LANE CONTROLLER).LS.T1-1	LANE SERVER POWER (HOT, NON-SWITCHED)	12	BLACK OR PER LOCAL CODE	STRANDED	THHW	120 VAC	20	BOOTH or MAIN POWER DISTRIBUTION PANEL and ISOLATED GROUND BAR	LANE SERVER FIELD WIRING (T1) TERMINAL BLOCK	T1-1	BARE WIRE (Capped and Taped for termination by UTS)	TUNNEL/POWER PANEL	NEW
5	(LANE CONTOLLER) .N.LS.T1-2	LANE SERVER POWER (NEUTRAL)		WHITE							T1-2		TUNNEL/POWER PANEL	NEW
6	(LANE CONTROLLER) .LS.T1-3	LANE SERVER POWER (GROUND)		GREEN							T1-4		TUNNEL/POWER PANEL	NEW
7	(LANE CONTROLLER)IG.LS.T1-4	LANE SERVER POWER (ISOLATED GROUND)		GREEN W/ WHITE STRIPE							T1-3		TUNNEL/POWER PANEL	NEW
	CANOPY TRAFFIC SIGNAL													
8	COS.CTS-R.SIG	RED CANOPY TRAFFIC SIGNAL POWER (HOT, SWITCHED)	12	RED	STRANDED	THHW	120 VAC	N/A	PROPOSED LANE CONTROLLER (T1) TERMINAL BLOCK	CANOPY OVERRIDE SWITCH (See Note #4)	T1-9	BARE WIRE	TUNNEL/POWER PANEL	NEW
9	COS.CTS-G.SIG	GREEN CANOPY TRAFFIC SIGNAL POWER (HOT, SWITCHED)		BLUE							T1-10		TUNNEL/POWER PANEL	NEW
10	COS.CTS-N.SIG	CANOPY TRAFFIC SIGNAL POWER (NEUTRAL)		WHITE							T1-11		TUNNEL/POWER PANEL	NEW
11	COS.CTS-CG.SIG	CANOPY TRAFFIC SIGNAL POWER (COMMON GROUND)		GREEN							T1-8		TUNNEL/POWER PANEL	NEW
	TRAFFIC CONTROL PEDESTAL (TCP)													
12	ITS.LS.T1-12	VIOLATION BEACON (HOT)	12	BLACK	STRANDED	THHW	120 VAC	-	PROPOSED LANE CONTROLLER (T1) TERMINAL BLOCK	TRAFFIC CONTROL PEDESTAL FIELD WIRING TERMINAL BLOCK 'TA'	T1-12	TA - TH BLACK	TUNNEL/POWER PANEL	NEW
13	ITS.LS.T1-13	LANE 1 ISLAND TRAFFIC SIGNAL RED LIGHT POWER (HOT, SWITCHED)		RED							T1-13	TA - TH RED	TUNNEL/POWER PANEL	NEW
14	ITS.LS.T1-14	LANE 1 ISLAND TRAFFIC SIGNAL AMBER LIGHT POWER (HOT, SWITCHED)		YELLOW							T1-14	TA - TH AMBER	TUNNEL/POWER PANEL	NEW
15	ITS.LS.T1-15	LANE 1 ISLAND TRAFFIC SIGNAL GREEN LIGHT POWER (HOT, SWITCHED)		BLUE							T1-15	TA - TH BLUE	TUNNEL/POWER PANEL	NEW
16	ITS.LS.T1-16	LANE 1 ISLAND TRAFFIC SIGNAL POWER (NEUTRAL)		WHITE							T1-16	TA - TH (N)	TUNNEL/POWER PANEL	NEW
17	PTD.LS.T1-6	LANE 1 PATRON TOLL DISPLAY POWER (HOT, NON-SWITCHED)	12	BLACK	STRANDED	THHW	120 VAC	-	PROPOSED LANE CONTROLLER (T1) TERMINAL BLOCK	TRAFFIC CONTROL PEDESTAL FIELD WIRING TERMINAL BLOCK 'TA'	T1-6	TA - PTD (H)	TUNNEL/POWER PANEL	NEW
18	PTD.LS.T1-7	LANE 1 PATRON TOLL DISPLAY POWER (NEUTRAL)		WHITE							T1-7	TA - PTD (N)	TUNNEL/POWER PANEL	NEW
19	PTD.LS.T1-8	LANE 1 PATRON TOLL DISPLAY POWER (GROUND)		GREEN							T1-8	TA - PTD / VIOL (G)	TUNNEL/POWER PANEL	NEW
20	(Primary Power Panel).TCP	VES/TCP POWER (HOT, NON-SWITCHED)	12	BLACK	STRANDED	THHW	120 VAC	-	EXISTING CLEAN POWER FEED	TRAFFIC CONTROL PEDESTAL FIELD WIRING TERMINAL BLOCK 'TB'	N/A	TB - 120V (H)	TUNNEL/POWER PANEL	NEW
21	(Primary Power Panel)N.TCP	VES/TCP POWER (NEUTRAL)		WHITE							N/A	TB - 120V (N)	TUNNEL/POWER PANEL	NEW
22	(Primary Power Panel)G.TCP	VES/TCP POWER (GROUND)		GREEN							N/A	TB - 120V (G)	TUNNEL/POWER PANEL	NEW
	LANE DIGITAL VIDEO AND AUDIT CAMERA (DVAS)													
23	(Primary Power Panel).PP	LANE DVAS PAYPOINT CAMERA ENCLOSURE POWER (HOT - NON-SWITCHED)	12	BLACK OR PER LOCAL CODE	STRANDED	THHW	120 VAC	N/A	EXISTING CLEAN POWER FEED	DVAS CAMERA ENCLOSURE FIELD WIRING POWER STRIP (UP TO 6 CAMERAS ON 1 CIRCUIT)	N/A	BARE WIRE (Capped and Taped for termination by UTS)	TUNNEL/POWER PANEL	NEW
24	(Primary Power Panel)N.PP	LANE DVAS PAYPOINT CAMERA ENCLOSURE POWER (NEUTRAL)		WHITE									TUNNEL/POWER PANEL	NEW
25	(Primary Power Panel)G.PP	LANE DVAS PAYPOINT CAMERA ENCLOSURE POWER (GROUND)		GREEN									TUNNEL/POWER PANEL	NEW
	AUTOMATIC VEHICLE IDENTIFICATION (AVI)													
26	(Primary Power Panel)L.AVI	LANE AVI READER QUAD POWER (AC HOT)	12	BLACK OR PER LOCAL CODE	STRANDED	THHW	120 VAC	20	EXISTING CLEAN POWER FEED	EXISTING AVI READER (LANES 6-10)	N/A	QUAD OUTLET	TUNNEL/POWER PANEL	NEW
27	(Primary Power Panel)N.AVI	LANE AVI READER QUAD POWER (AC NEUTRAL)		WHITE									TUNNEL/POWER PANEL	NEW
28	(Primary Power Panel) G.AVI	LANE AVI QUAD READER (GROUND)		GREEN									TUNNEL/POWER PANEL	NEW
	GENERAL NOTES:	**1) RF MODULE POWER CONNECTOR IS DEPENDENT ON EQUIPMENT TYPE. SEE SPECIFIC USER INSTALLATION MANUAL OR UTS CONSTRUCTION AND INSTALLATION GUIDE FOR TYPE**												
		2) (In#) will have to be replaced with the lane number assigned according to construction plans.												
		3) (Booth Panel#) (Ckt #) will have to be replaced with the Panel ID and circuit/breaker number that this wire is connected to.												
		4) Canopy Override Switch - These are switched hot leads from the Lane Server clean power source fed through lane server switched terminals. When manually switching with dirty power, Line and Neutral leads must both be switched.												

Date:2/13/2015

Filename: 103_Schedule1.dgn

Scale:

No.	Revision	By	Date

Designed by: HNTB

CONSULTANT PROJECT MANAGER: R. Bruce Munger, P.E.

	By	Date		By	Date
Designed	LB	02/15	Checked	JC	02/15
Drawn	MPC	02/15	In Charge of	RAL	02/15

HNTB CORPORATION
340 County Road, Suite 6-C
Westbrook, ME 04092
TEL (207) 774-5155
FAX (207) 228-0909

MAINE TURNPIKE

THE GOLD STAR MEMORIAL HIGHWAY

MTA PROJECT MANAGER: William Yates

WEST GARDINER BARRIER TOLL PLAZA
ORT CONVERSION

CASH LANE POWER SCHEDULE

SHEET NUMBER: E-07

CONTRACT:2015.11

Date:2/13/2015

WIRING SHOWN IS FOR CASH LANE. REPLICATE FOR SIMILAR LANES.

ATT/ETC DESCRETE WIRING SCHEDULE - DATA: DOOR WIRING LOGIC, SERIAL, VIDEO, AUDIO (Primary Server)

Intelligent Vehicle Identification System (IVIS) (For Wiring Only. Home Run Lead supplied as part of Sensor)

	WIRE LABEL	DESCRIPTION	AWG	COLOR	CORE	STANDARD	FROM	TO	LANE SERVER TERMINAL #	STATUS
100	T4-49.G1	NOT USED						SENSORS COME WITH 80' PIGTAIL. IF ADDITIONAL WIRE NEEDED SPLICE TO IMSA-50=2 TYPE CABLE. INSTALL THE HOME RUN CABLE FROM THE LANE GROUND BOX TO THE LANE SERVER CONNECTION SPECIFIED IN THE ADJ COLUMN. ALL SPLICES MUST BE SOLDERED, TIGHTLY TWISTED, AND INSULATED TO BE WATER RESISTANT. FOR LANES NOT HAVING PRE_CLASSIFICATION, DELETE REQUIREMENTS FOR PRE_CLASSIFICATION SENSORS AND INTELLIGENT QUEUING SENSOR	T4-49	
101	T4-50.G1								T4-50	
102	T4-51.P1	NOT USED							T4-51	
103	T4-52.P1								T4-52	
104	T4-53.G2	NOT USED							T4-53	
105	T4-54.G2								T4-54	
106	T4-55.IQ	NOT USED							T4-55	
107	T4-56.IQ								T4-56	
108	T4-57.PP	PAY POINT PRIMARY SENSOR	16	BLACK	STRANDED	IMSA50-2	PAY POINT PRIMARY SENSOR		T4-57	NEW
109	T4-58.PP								T4-58	NEW
110	T4-59.G3	POST CLASSIFICATION GRADIENT SENSOR #1	16	BLACK	STRANDED	IMSA50-2	POST-CLASSIFICATION GRADIENT SENSOR #1		T4-59	NEW
111	T4-60.G3								T4-60	NEW
112	T4-61.P4	POST CLASSIFICATION PRIMARY SENSOR	16	BLACK	STRANDED	IMSA50-2	POST-CLASSIFICATION PRIMARY SENSOR		T4-61	NEW
113	T4-62.P4								T4-62	NEW
114	T4-63.G4	POST CLASSIFICATION GRADIENT SENSOR #2	16	BLACK	STRANDED	IMSA50-2	POST-CLASSIFICATION GRADIENT SENSOR #2		T4-63	NEW
115	T4-64.G4								T4-64	NEW

Toll Booth Peripheral Cables (MLT, Printer, PC Prox, PTD Display)

116	S3.1.PTD	LANE (8) PATRON TOLL DISPLAY COMMUNICATIONS	RJ-45	BARE WIRE AT PEDESTAL	FIELD WIRED - ONLY FOUR PINS USED: PIN 3 - DEVICE RECEIVE, PIN 5 - GROUND, PINS 7 AND 8 JUMPERED	RS232	PEDESTAL WIRE CENTER TA - PTD DATA PEDESTAL WIRE CENTER TA - PTD DATA	TBD	NEW NEW
117	Lane(#)TR	LANE (#) TRIGGER	RJ-45	BARE WIRE	Pin to Pin	TTL(optically Isolated)	(See Note 1 below) Wire to Designated Trigger Terminals for Front and Rear Trigger (+/-) in Pedestal Wire Center	TBD	NEW
118	S8.PROX	LANE (8) MANUAL LANE TERMINAL PCPROX CARD READER	RJ-45	DB9 (MALE)	SERIAL	RS232	(See Note 1 below)	S-8	NEW
119	PROXPWR	LANE (8) MANUAL LANE TERMINAL PCPROX CARD READER POWER	PS2 (MALE)	PS2 (FEMALE)	SERIAL	RS232	(See Note 1 below)	PS/2	NEW
120	S9.MLT	LANE (8) TOLL BOOTH MANUAL LANE TERMINAL (MLT) COMMUNICATIONS	RJ-45	RJ-45	SERIAL	RS232	(See Note 1 below)	TBD	NEW
121	S10.RP	LANE (8) TOLL BOOTH RECEIPT PRINTER COMMUNICATIONS	RJ-45	DB25 (MALE)	NULL MODEM	RS232	PREFAB NULL MODEM CABLE - NOT TO EXCEED 50 FT	TBD	NEW
122	MLTVGA	LANE (8) TOLL BOOTH MANUAL LANE TERMINAL VIDEO	DB15(VGA) (FEMALE)	DB15(VGA) (MALE)	VGA/SVGA/XGA analog	VIDEO	PREFAB VIDEO CABLE - NOT TO EXCEED 50 FT	MONITOR	NEW
123	MLTAUDIO	LANE (8) TOLL BOOTH MANUAL LANE TERMINAL SPEAKER	3.5mm Plug (MALE)	3.5mm Plug (MALE)	AUDIO	AUDIO	PREFAB AUDIO CABLE	AUDIO	NEW

Notes:

1.) Lane Server to peripheral cable pin connections - refer to peripheral Installation Guide. RJ-45 at Lane Server: 1= CTS, 2=CD, 3=RxD, 4=Gnd, 5=Gnd, 6=TxD, 7=DTR, 8=RTS. (No handshaking is used)

2.) Schedule does not include booth access control requirements, booth DVAS or wiring.

Filename: 104_Schedule2.dgn

Scale:

No.	Revision	By	Date

Designed by: HNTB

CONSULTANT PROJECT MANAGER: R. Bruce Munger, P.E.

	By	Date		By	Date
Designed	LB	02/15	Checked	JC	02/15
Drawn	MPC	02/15	In Charge of	RAL	02/15

HNTB CORPORATION
340 County Road, Suite 6-C
Westbrook, ME 04092
TEL (207) 774-5155
FAX (207) 228-0909

MAINE TURNPIKE

THE GOLD STAR MEMORIAL HIGHWAY

MTA PROJECT MANAGER: William Yates

WEST GARDINER BARRIER TOLL PLAZA
ORT CONVERSION

CASH LANE DATA SCHEDULE

CONTRACT:2015.11

Date:2/13/2015

WIRING SHOWN IS FOR CASH LANE. REPLICATE FOR SIMILAR LANES.

ATT-ETC LANE NETWORK WIRING SCHEDULE

LANE SERVER MULTIMODE FIBER (FOR REMOTE SWITCH ACCESS)

	WIRE LABEL	DESCRIPTION	COLOR	CONNECTOR AT FX PATCH PANEL (COMPUTER ROOM)	COMMUNICATIONS SWITCH IN THE LANE SERVER	WIRING CONVENTION	PROTOCOL	FIELD WIRING INSTRUCTIONS	STATUS
200	(Ln#)LS	LANE SERVER NETWORK CONNECTION - SEND	BLUE	ST (MALE)	ST (MALE)	6-FIBER (TYP) (4 Min Fiber) MULTI-MODE 100mbs	62.5/125 MICRONS INDOOR/ OUTDOOR RISER RATED	FROM PLAZA COMMUNICATIONS RACK FIBER (FX) PATCH PANEL TO THE BOOTH LANE SERVER FIBER LINE INTERFACE UNIT (LIU) IN THE CABINET OR GUTTER. PROVIDE 1 EA 3M DUPLEX FX PATCH CABLE (STM to STM) FROM THE LIU TO THE LANE 1 LANE SERVER NETWORK SWITCH.	NEW
201		LANE SERVER NETWORK CONNECTION - RECEIVE	ORANGE						NEW
202		LANE SERVER NETWORK CONNECTION - SPARE SEND	GREEN						NEW
203		LANE SERVER NETWORK CONNECTION - SPARE RECEIVE	BROWN						NEW
204		LANE SERVER NETWORK CONNECTION - SPARE SEND (optional)	SLATE						NEW
205		LANE SERVER NETWORK CONNECTION - SPARE RECEIVE (optional)	WHITE						NEW
	LANE SERVER ETHERNET CONNECTION (FOR LOCAL SWITCH -SAME ROOM- ACCESS)								
206	(Ln#).LS	LANE SERVER NETWORK CONNECTION (CAT5E/6 CABLE ALTERNATIVE TO FIBER ABOVE IF LOCAL SWITCH PROVIDED AND CONNECTION IS LESS THAN 300 FEET)	CAT5E COLOR STANDARD	RJ-45 (MALE)	RJ-45 (MALE)	CAT5E/6 DIRECT BURIAL	UTP	CAT5E BULK CABLE FROM THE SERVER ROOM TO THE LANE CABINET FIBER SWITCH LANE SERVER SWITCH. TERMINATE AND TEST CABLE RUN.	NEW
	DIGITAL VIDEO AUDIT SYSTEM (DVAS)								
208	DVAS.(Ln#).PP	LANE DVAS PAYPOINT CAMERA NETWORK CONNECTIONS	CAT5E COLOR STANDARD	RJ-45 (MALE)	RJ-45 (MALE)	CAT5E/6 DIRECT BURIAL	UTP	CAT5E BULK CABLE FROM THE LANE CONTROLLER AND FIBER SWITCH TO THE LANE DVAS PAYPOINT CAMERA. TERMINATE AND TEST CABLE RUN. ALLOW 10' OF CABLE TO REACH FROM THE DVAS DATA JUNCTION BOX TO THE LANE 1 CAMERA ENCLOSURE.	NEW
	AUTOMATIC VEHICLE IDENTIFICATION (AVI)								
209	(Ln#).AVIE	LANE AVI READER ETHERNET DATA CONNECTION	CAT5E COLOR STANDARD	RJ-45 (MALE)	RJ-45 (MALE)	CAT5E/6 DIRECT BURIAL	10/100 UTP	CAT5E BULK CABLE FROM THE LANE CONTROLLER CONNECTION PANEL AVI 110 JACK TO THE LANE AVI READER SERIAL TO ETHERNET CONVERTER	NEW
210	(Ln#).AVIS	LANE AVI READER DATA CONNECTION	CAT5E COLOR STANDARD	RJ-45 (MALE)	RJ-45 (MALE)	CAT5E/6 DIRECT BURIAL	10/100 UTP	CAT5E BULK CABLE FROM THE LANE CONTROLLER CONNECTION PANEL AVI 110 JACK TO THE LANE AVI READER SERIAL TO ETHERNET CONVERTER	NEW
	TRAFFIC CONTROL PEDESTAL (TCP) MAINTENANCE PORT								
211	(Ln#).TCPFVES	LANE TRAFFIC CONTROL PEDESTAL VES CAMERA CONNECTION	CAT5E COLOR STANDARD	RJ-45 (MALE)	RJ-45 (MALE)	CAT5E/6 DIRECT BURIAL	GIGABIT UTP	CAT5E BULK CABLE FROM THE LANE CONTROLLER CONNECTION PANEL VES 110 JACK TO THE LANE ISLAND TRAFFIC CONTROL PEDESTAL FRONT CAMER PORT.	NEW
212	(Ln#).TCPRVES	LANE TRAFFIC CONTROL PEDESTAL VES CAMERA CONNECTION	CAT5E COLOR STANDARD	RJ-45 (MALE)	RJ-45 (MALE)	CAT5E/6 DIRECT BURIAL	GIGABIT UTP	CAT5E BULK CABLE FROM THE LANE CONTROLLER CONNECTION PANEL VES 110 JACK TO THE LANE ISLAND TRAFFIC CONTROL PEDESTAL REAR CAMER PORT.	NEW
213	(Ln#).TCPM	LANE TRAFFIC CONTROL PEDESTAL MAINTENANCE NETWORK CONNECTION	CAT5E COLOR STANDARD	RJ-45 (MALE)	RJ-45 (MALE)	CAT5E/6 DIRECT BURIAL	GIGABIT UTP	CAT5E BULK CABLE FROM THE LANE CONTROLLER AND FIBER SWITCH TO THE LANE ISLAND TRAFFIC CONTROL PEDESTAL MAINTENANCE PORT.	NEW

NOTES:

1). ALL NETWORK CABLES ARE GIGABIT COMPLIANT, SUITABLE FOR OUTDOOR/WET ENVIRONMENT, OSP GRADE FOR DIRECT BURIAL

2). STRADDLE ANTENNAS/READERS ARE LOCATED BETWEEN LANES ABOVE THE STRIPE. IF STRADDLE ANTENNAS/READERS ARE OMITTED BY PLANS, WIRING MAY BE OMITTED

Filename: 105_Schedule3.dgn

Scale:

No.	Revision	By	Date

Designed by: HNTB

CONSULTANT PROJECT MANAGER: R. Bruce Munger, P.E.

	By	Date		By	Date
Designed	LB	02/15	Checked	JC	02/15
Drawn	MPC	02/15	In Charge of	RAL	02/15

HNTB CORPORATION
340 County Road, Suite 6-C
Westbrook, ME 04092
TEL (207) 774-5155
FAX (207) 228-0909

MAINE TURNPIKE

THE GOLD STAR MEMORIAL HIGHWAY

MTA PROJECT MANAGER: William Yates

WEST GARDINER BARRIER TOLL PLAZA
ORT CONVERSION

CASH LANE NETWORK WIRING SCHEDULE

SHEET NUMBER: E-09

CONTRACT:2015.11

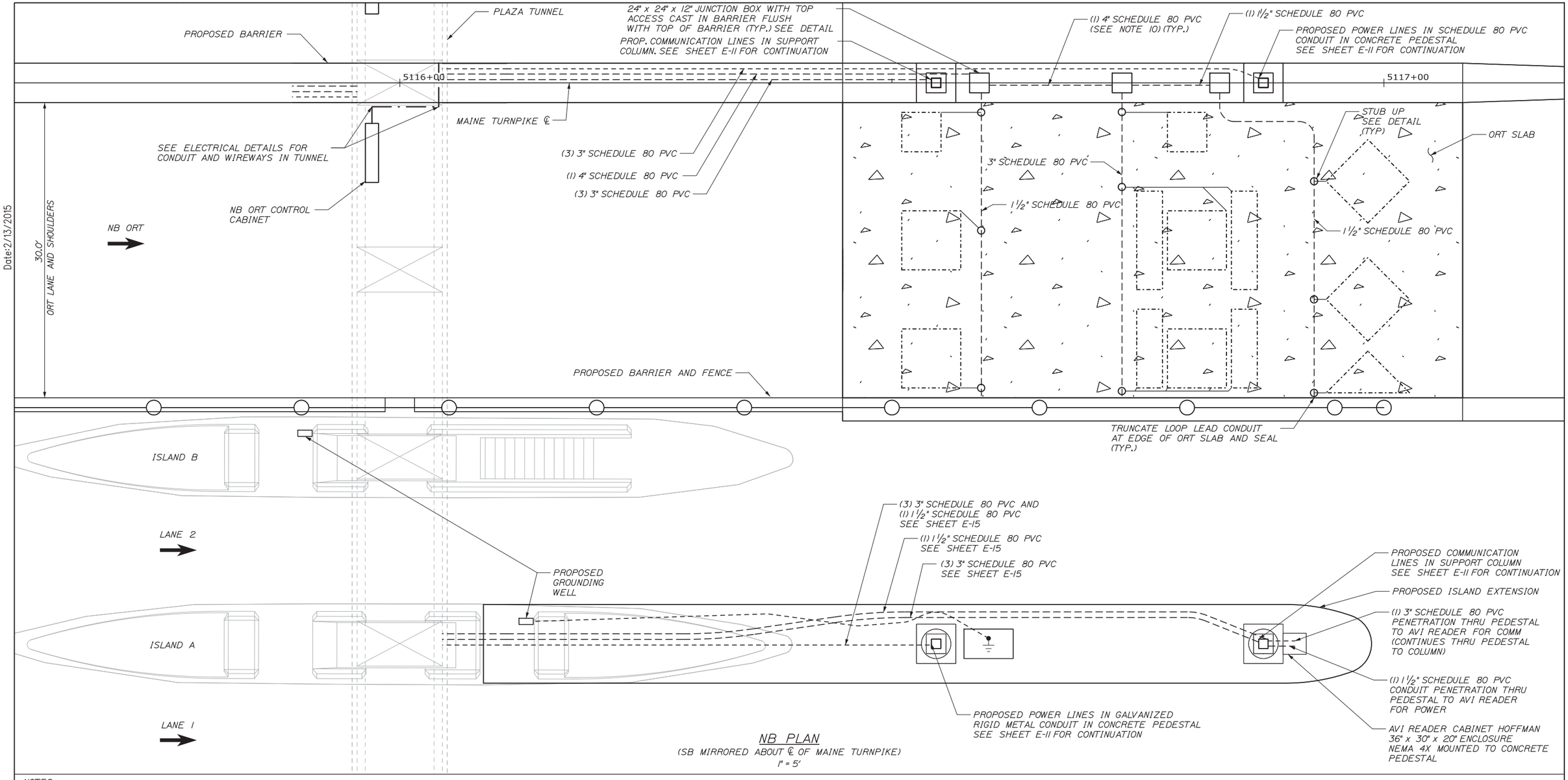

NB PLAN

(SB MIRRORED ABOUT ℄ OF MAINE TURNPIKE)

1" = 5'

NOTES:

1. ALL LOOP LEAD STUB UPS ARE 3" DIAMETER AND SHALL BE 3" MIN. FROM EDGE OF SLAB. THE TOP ELEVATION OF ALL ALL SENSOR LOOP CONDUIT FROM STUB UPS SHALL BE AT BOTTOM OF SLAB. SEE DETAIL ON SHEET E-08.
2. CONTRACTOR SHALL CONFIRM LOCATIONS OF JOINTS AND STUB UPS PRIOR TO SETTING STUB UPS.
3. CONTRACTOR SHALL VERIFY ALL CONDUIT STUB UP LOCATIONS WITH SYSTEM INTEGRATOR PRIOR TO INSTALLATION.
4. ALL SENSOR LOOP JUNCTION BOXES SHALL BE NON-METALLIC.
5. SENSOR LOOP LEAD WIRES MUST BE BRIDGED AT ALL JOINTS.
6. FOR EXACT LOOP SENSOR LOCATIONS SEE SHEET E-03.
7. POWER LINES WITHIN 8 FEET OF SENSOR LOOPS MUST BE IN GALVANIZED RIGID METAL CONDUIT.
8. SEE SHEET E-15 FOR CONDUIT DETAILS IN BARRIER AND ISLAND EXTENSION.
9. CONDUITS BETWEEN PIERS TO BE IN CAST IN PLACE MEDIAN BARRIER.

LEGEND

- CONDUIT WITH POWER
- CONDUIT WITH COMMUNICATION
- LOOPS LEADS TO STUB UPS

Scale:

No.	Revision	By	Date

Designed by: HNTB

CONSULTANT PROJECT MANAGER: R. Bruce Munger, P.E.

	By	Date		By	Date
Designed	LB	02/15	Checked	JC	02/15
Drawn	MPC	02/15	In Charge of	RAL	02/15

HNTB CORPORATION
340 County Road, Suite 6-C
Westbrook, ME 04092
TEL (207) 774-5155
FAX (207) 228-0909

MAINE TURNPIKE

THE GOLD STAR MEMORIAL HIGHWAY

MTA PROJECT MANAGER: William Yates

WEST GARDINER BARRIER TOLL PLAZA ORT CONVERSION

ORT UNDERGROUND ELECTRICAL PLAN

SHEET NUMBER: E-10

CONTRACT:2015.11

Date:2/13/2015

Filename: 106_Underground Electrical.DGN

Date:2/13/2015

LIGHTNING SUPPRESSION ON TRUNCATED CANOPY NOTES:

1. THE EXISTING PATH OF THE EXISTING GROUND DOWN CONNECTOR CABLES ON THE DEPARTURE SIDE OF ISLANDS A AND G SHALL BE USED FOR THE NEW GROUND DOWN CONNECTOR CABLES.

2. A NEW GROUNDING WELL SHALL BE INSTALLED IN THE AREA TO BE EXCAVATED FOR THE INSTALLATION OF THE CONDUIT THROUGH ISLANDS A AND G (SEE SHEETS E-10 AND E-15).

3. A SECOND GROUNDING WELL SHALL BE INSTALLED IN THE APPROACH SIDE WALKWAY PORTION OF ISLANDS B AND F. THE PATH OF THE NEW GROUND DOWN CONNECTOR SHALL BE SIMILAR TO THE EXISTING AT ISLANDS A AND G, AND SHALL BE ATTACHED TO THE PROPOSED SUPPORT COLUMNS (SEE SHEET S-20).

4. THE GROUNDING WELLS SHALL CONSIST OF A 17"X10.125"X16.25", TRI5 QUAZITE JUNCTION BOX WITH A SINGLE ¾"X10' COPPER CLAD STEEL GROUNDING ROD UL 467 COMPLIANT CENTERED WITHIN THE WELL.

5. BOND EACH SIGN MOUNTING FRAME MEMBER WITH #2/0 AWG BARE COPPER WIRE (TYP).

6. ALL LIGHTNING PROTECTION WORK SHALL BE PROVIDED IN FULL CONFORMANCE WITH UL 96A AND WITH NFPA 780.

7. LIGHTNING PROTECTION CONDUCTOR BENDS SHALL NOT FORM AN INCLUDED ANGLE LESS THAN 90 DEGREES OR HAVE A RADIUS BEND LESS THAN 8".

8. LIGHTNING PROTECTION AIR TERMINALS TO BE INSTALLED ON THE EXISTING CANOPY SIGN LIGHTING FIXTURES SHALL BE 10" TALL. LIGHTNING PROTECTION AIR TERMINALS TO BE INSTALLED ON THE EXISTING CANOPY ROOF SHALL BE 24" TALL.

9. SEE SHEET NUMBER E-13 FOR DETAIL OF GROUND TEST WELL.

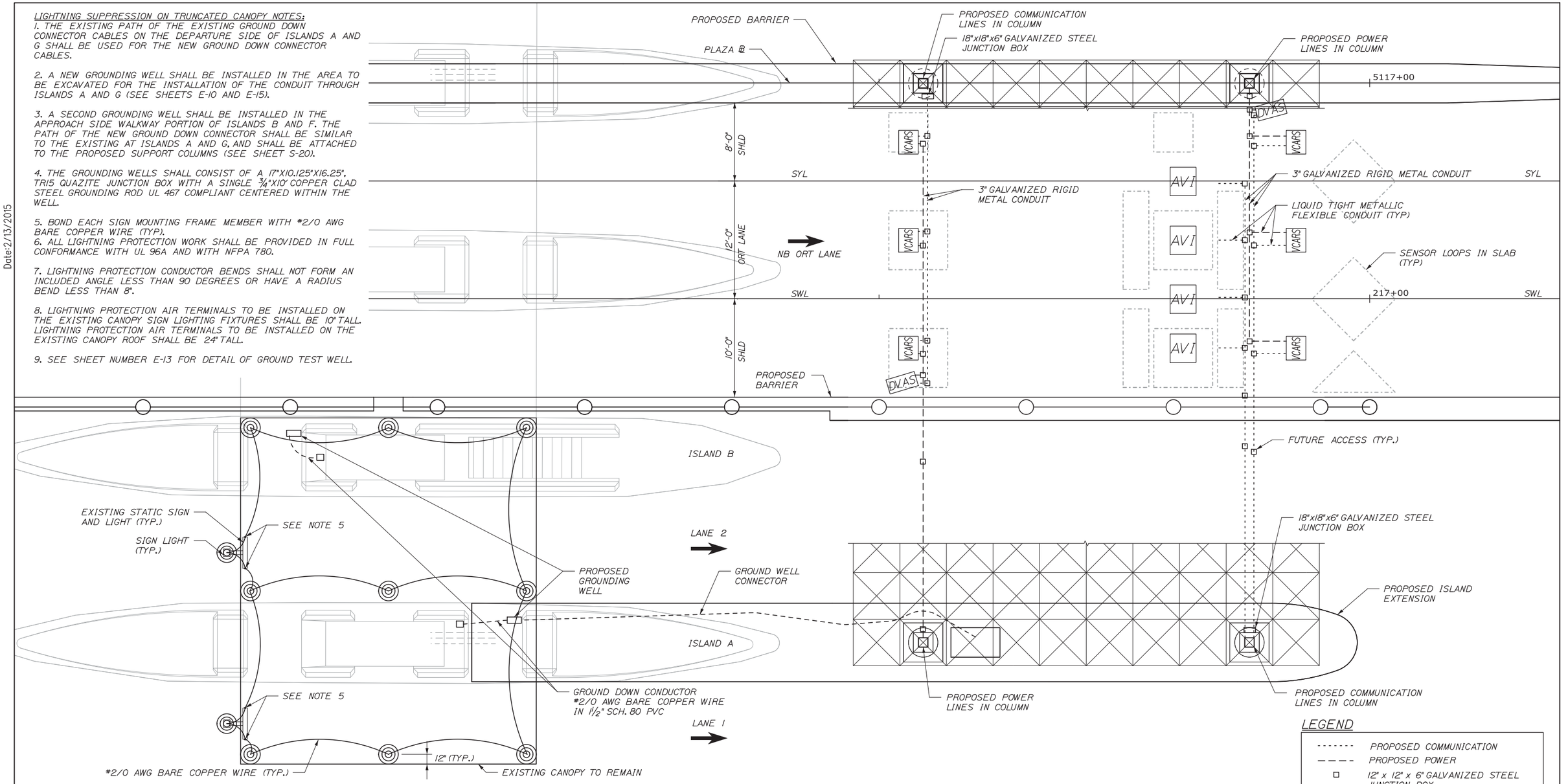

LEGEND

- PROPOSED COMMUNICATION
- PROPOSED POWER
- 12" x 12" x 6" GALVANIZED STEEL JUNCTION BOX
- AIR TERMINAL
- #2/0 AWG BARE COPPER WIRE
- GROUNDING ELECTRODE
- CONCRETE-ENCASED ELECTRODE #2/0 AWG BARE COPPER WIRE

ORT EQUIPMENT NOTES:

1. SPACE FRAME SHOWN PARTIALLY FOR CLARITY. REFER TO STRUCTURAL PLANS FOR SPACE FRAME DETAILS.
2. REFER TO SHEET E-03 FOR EXACT LOCATIONS OF OVERHEAD TOLLING EQUIPMENT.
3. TRANSCORE SHALL MAKE CONNECTION FROM THE FLEXIBLE CONDUIT TO THE VCARS AND DVAS EQUIPMENT.
4. LIQUID TIGHT METALLIC FLEXIBLE CONDUIT SHALL BE THE FOLLOWING SIZES:

- AVI COMMUNICATION	¾"	- DVAS POWER	½"
- VCARS POWER	½"	-DVAS COMMUNICATION	½"
- VCARS COMMUNICATION	½"		

NB PLAN

(SB MIRRORED ABOUT ℄ OF MAINE TURNPIKE)

1" = 5'

Filename: 107_Canopy Electrical.DGN

No.	Revision	By	Date

Scale:

Designed by: HNTB

CONSULTANT PROJECT MANAGER: R. Bruce Munger, P.E.

	By	Date		By	Date
Designed	LB	02/15	Checked	JC	02/15
Drawn	MPC	02/15	In Charge of	RAL	02/15

HNTB CORPORATION
340 County Road, Suite 6-C
Westbrook, ME 04092
TEL (207) 774-5155
FAX (207) 228-0909

MAINE TURNPIKE

THE GOLD STAR MEMORIAL HIGHWAY

MTA PROJECT MANAGER: William Yates

WEST GARDINER BARRIER TOLL PLAZA ORT CONVERSION

ORT OVERHEAD ELECTRICAL PLAN/EXISTING CANOPY LIGHTNING SUPPRESSION SYSTEM

SHEET NUMBER: E-11

CONTRACT:2015.11

Date:2/13/2015

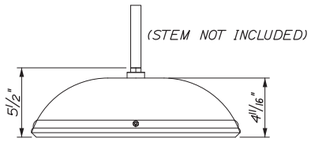

SIDE VIEW

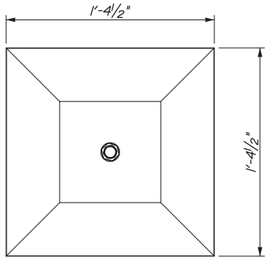

TOP VIEW

SPACE FRAME LED LIGHT FIXTURE DETAIL

(MULTI PURPOSE LIGHT (XPGP) PRODUCED BY LSI INDUSTRIES SHOWN)

NOTES:

1. LIGHTING FIXTURES TO BE * XPGP-S-LED-68-CW-UE-MSV BY LSI INDUSTRIES OR APPROVED EQUAL.
2. THE CONTRACTOR SHALL SUBMIT A PROPOSED METHOD OF ATTACHING ALL ANCILLARY COMPONENTS TO THE SPACE FRAME TO THE RESIDENT FOR APPROVAL. THE PROPOSED ATTACHMENT METHOD SHALL NOT REQUIRE DRILLING, WELDING OR OTHER ATTACHMENT METHODS THAT WILL DAMAGE THE SPACE FRAME OR ITS GALVANIZED COATING. ANY AREAS OF GALVANIZED COATING THAT ARE DAMAGED BY THE CONTRACTOR DURING INSTALLATION OF ANCILLARY COMPONENTS SHALL BE REPAIRED IN ACCORDANCE WITH ASTM A780.
3. FINAL MOUNTING LOCATIONS TO BE APPROVED BY RESIDENT.
4. PHOTOCELL CONTROL SHALL BE PROVIDED FOR BOTH NB & SB ORT SPACE FRAME LIGHTING. PAYMENT WILL BE INCIDENTAL TO ITEM 655.90.

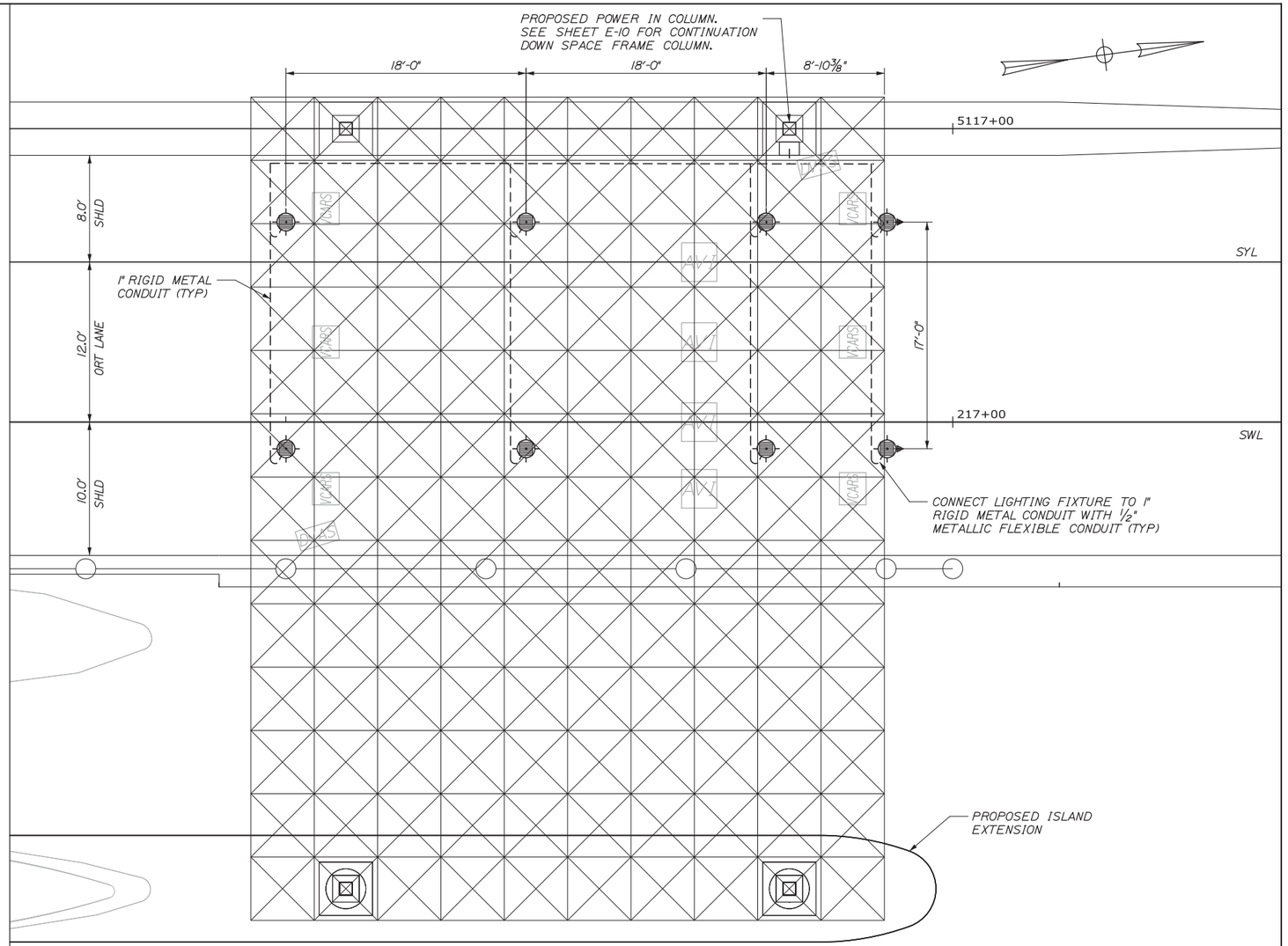

LEGEND

SPACE FRAME LED LIGHT FIXTURE

(3) #12 AWG IN 1" GALVANIZED RIGID METAL CONDUIT

NB PLAN

(SB MIRRORED ABOUT ℄ OF MAINE TURNPIKE)

Filename: 108_Canopy Lighting.DGN

No.	Revision	By	Date

Scale:

Designed by: HNTB

CONSULTANT PROJECT MANAGER: R. Bruce Munger, P.E.

	By	Date		By	Date
Designed	LB	02/15	Checked	JC	02/15
Drawn	MPC	02/15	In Charge of	RAL	02/15

HNTB CORPORATION
340 County Road, Suite 6-C
Westbrook, ME 04092
TEL (207) 774-5155
FAX (207) 228-0909

MAINE TURNPIKE

THE GOLD STAR MEMORIAL HIGHWAY

MTA PROJECT MANAGER: William Yates

WEST GARDINER BARRIER TOLL PLAZA ORT CONVERSION

ORT SPACE FRAME LIGHTING

SHEET NUMBER: E-12

CONTRACT:2015.11

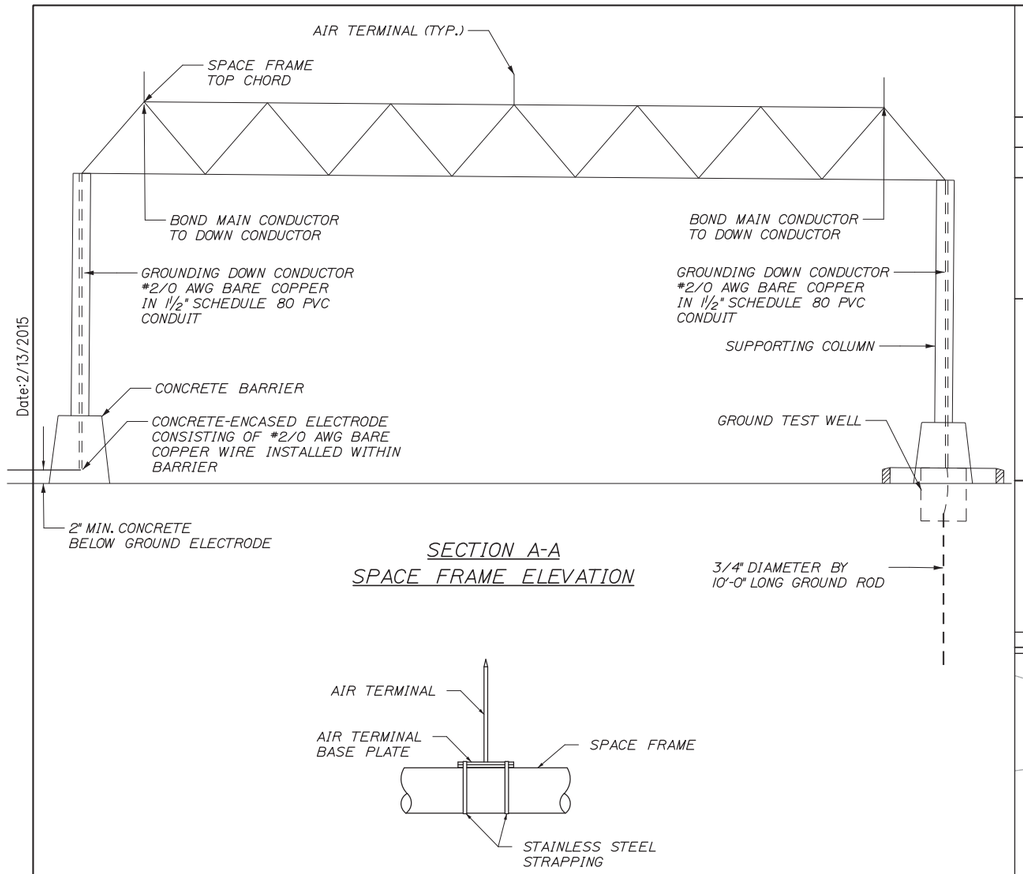

SECTION A-A
SPACE FRAME ELEVATION

AIR TERMINAL MOUNTING DETAIL

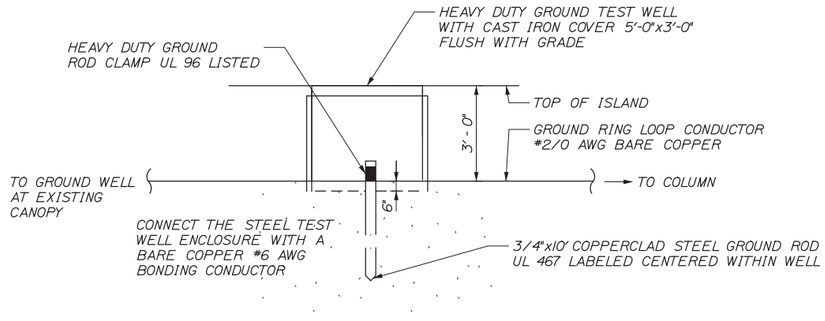

GROUND TEST WELL DETAILS

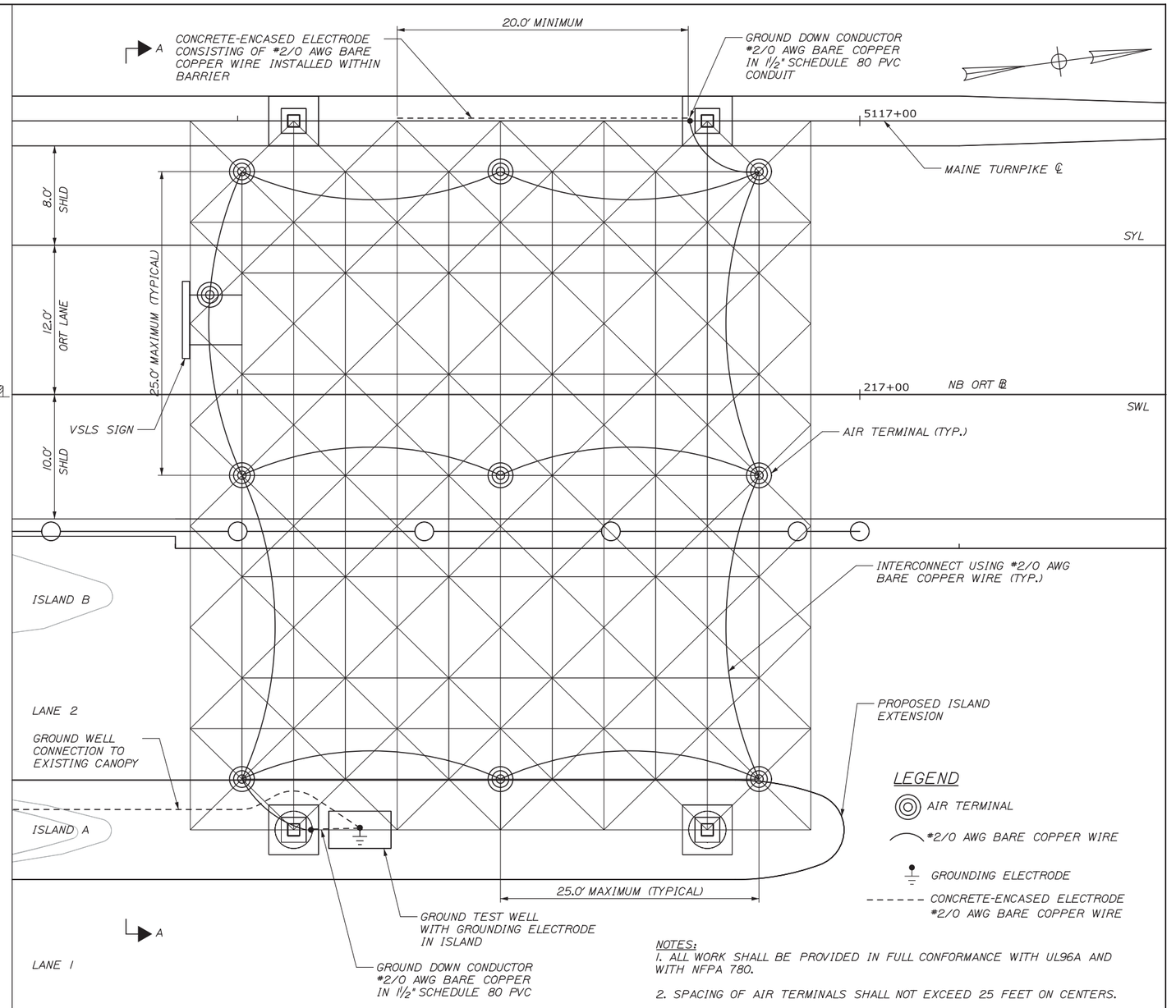

NB PLAN
(SB MIRRORED ABOUT ℄ OF MAINE TURNPIKE)

LEGEND

- AIR TERMINAL
- #2/0 AWG BARE COPPER WIRE
- GROUNDING ELECTRODE
- CONCRETE-ENCASED ELECTRODE #2/0 AWG BARE COPPER WIRE

NOTES:

1. ALL WORK SHALL BE PROVIDED IN FULL CONFORMANCE WITH UL96A AND WITH NFPA 780.
2. SPACING OF AIR TERMINALS SHALL NOT EXCEED 25 FEET ON CENTERS.
3. CONDUCTOR BENDS SHALL NOT FORM AN INCLUDED ANGLE LESS THAN 90 DEGREES OR HAVE A RADIUS OF BEND LESS THAN 8 INCHES.
4. PROVIDE A #2/0 AWG BARE COPPER CONDUCTOR IN 1½" SCHEDULE 80 PVC CONDUIT UNDERGROUND TO CONNECT THE GROUNDING ELECTRODES AT THE TEST WELL AT THE SPACE FRAME AND THE TEST WELL AT THE EXISTING CANOPY. SEE SHEET E-11.
5. LIGHTNING PROTECTION AIR TERMINALS TO BE INSTALLED AT THE ORT 70 MPH SIGN SHALL BE 10" TALL. LIGHTNING PROTECTION AIR TERMINALS TO BE INSTALLED ON THE SPACE FRAME SHALL BE 24" TALL.

Date:2/13/2015

Filename: 109_Lightning Suppression System.DGN

Scale:

No.	Revision	By	Date

Designed by: HNTB

CONSULTANT PROJECT MANAGER: R. Bruce Munger, P.E.

	By	Date		By	Date
Designed	LB	02/15	Checked	JC	02/15
Drawn	MPC	02/15	In Charge of	RAL	02/15

HNTB CORPORATION
340 County Road, Suite 6-C
Westbrook, ME 04092
TEL (207) 774-5155
FAX (207) 228-0909

MAINE TURNPIKE

THE GOLD STAR MEMORIAL HIGHWAY

MTA PROJECT MANAGER: William Yates

WEST GARDINER BARRIER TOLL PLAZA ORT CONVERSION

ORT LIGHTNING SUPPRESSION SYSTEM

SHEET NUMBER: E-13

CONTRACT:2015.11

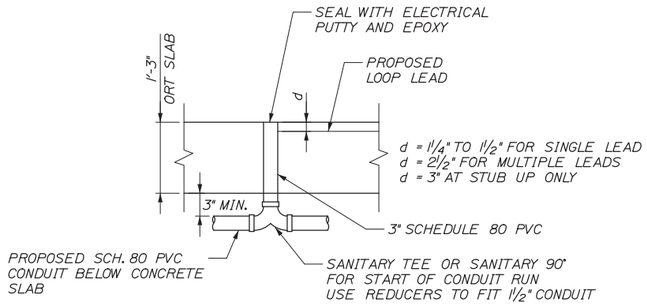

STUB UP IN ORT SLAB
SECTION VIEW

NOTE: SEALING STUB-UPS SHALL BE INCIDENTAL TO THE PVC PAY ITEM.

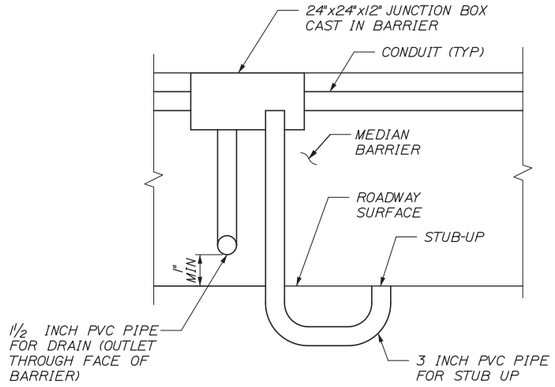

NOTE:
1. JUNCTION BOX MUST BE FLUSH WITH TOP OF BARRIER AND HAVE ACCESS FROM TOP.
2. SEE PLANS FOR NUMBER, SIZE AND TYPE OF CONDUIT.

CONDUIT ENTERING JUNCTION BOX
IN MEDIAN BARRIER

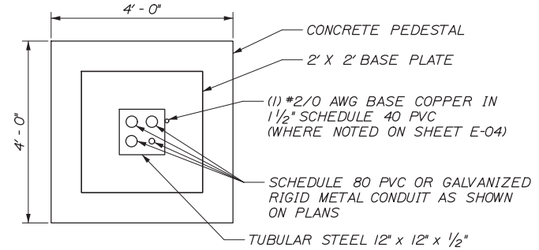

NOTE: CONDUITS EXTEND 6" MAX. ABOVE SPACE FRAME PEDESTAL. WIRING CONTINUES THROUGH TUBE STEEL.

SPACEFRAME COLUMN
PLAN VIEW

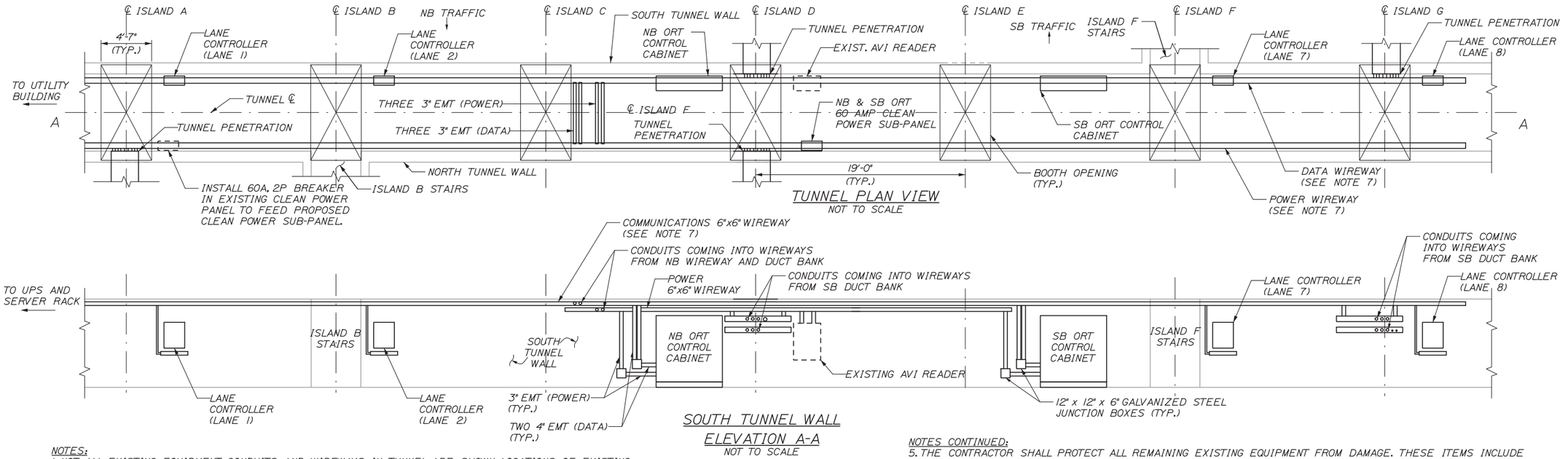

TUNNEL PLAN VIEW
NOT TO SCALE

SOUTH TUNNEL WALL
ELEVATION A-A
NOT TO SCALE

NOTES:
1. NOT ALL EXISTING EQUIPMENT, CONDUITS AND WIREWAYS IN TUNNEL ARE SHOWN. LOCATIONS OF EXISTING COMPONENTS SHOWN ARE APPROXIMATE. CONTRACTOR SHALL COORDINATE WITH RESIDENT THE REUSE OR REPLACEMENT OF EXISTING COMMUNICATION WIREWAY ON THE SOUTH TUNNEL WALL AND OTHER EXISTING COMPONENTS WHEN PRACTICABLE.
2. LOCATIONS OF PROPOSED EQUIPMENT SHALL BE APPROVED BY THE RESIDENT.
3. COMPONENTS NECESSARY FOR ATTACHING POWER PANEL, JUNCTION BOXES, CONDUIT AND WIREWAYS TO TUNNEL WALL AND ROOF ARE INCIDENTAL TO THE ITEM.
4. COMPONENTS NECESSARY FOR ATTACHING CONDUITS AND WIREWAYS TO JUNCTION BOXES, CABINETS AND THE POWER PANEL ARE INCIDENTAL TO THE CONDUIT AND WIREWAYS.

NOTES CONTINUED:
5. THE CONTRACTOR SHALL PROTECT ALL REMAINING EXISTING EQUIPMENT FROM DAMAGE. THESE ITEMS INCLUDE BUT ARE NOT LIMITED TO: TELEPHONES, CABLES, DIRECTV CONNECTIONS, ELECTRICAL SYSTEMS, HEATING SYSTEMS AND PIPES. TAKE NOTE THAT THE WHITE HEATING PIPES ON THE NORTH WALL ARE NEAR THE PROPOSED LOCATION OF TUNNEL PENETRATION.
6. CLEAN AND DIRTY POWER PANELS, LANE CONTROLLER CABINETS AND ALL OTHER EQUIPMENT, WIRING AND COMMUNICATION ASSOCIATED WITH TOLLING IN EXISTING CASH LANES 3, 4, 5 & 6 SHALL BE REMOVED BY THE CONTRACTOR. CONTRACTOR SHALL COORDINATE WITH THE RESIDENT CONCERNING WHICH EQUIPMENT SHALL BE REMOVED AND WHEN. PAYMENT FOR THIS WORK SHALL BE INCIDENTAL TO ITEM 800.10 ELECTRICAL DEMOLITION.
7. CONTRACTOR SHALL COORDINATE WITH RESIDENT FOR THE REUSE OR REPLACEMENT OF EXISTING POWER AND COMMUNICATION WIREWAYS.
8. RELOCATE THE EXISTING NORMAL POWER AND CLEAN POWER PANELS WITHIN THE TUNNEL AT BOOTH 1 TO AVOID CONFLICT WITH THE NEW CONDUIT ENTRANCE AT THIS LOCATION. PROVIDE WIRING BOXES AND WIRING CONDUCTOR EXTENSIONS AS NECESSARY FACILITATE THE NEW PANELS LOCATION.

Scale:

No.	Revision	By	Date

Designed by: HNTB

CONSULTANT PROJECT MANAGER: R. Bruce Munger, P.E.

	By	Date		By	Date
Designed	LB	02/15	Checked	JC	02/15
Drawn	MPC	02/15	In Charge of	RAL	02/15

HNTB CORPORATION
340 County Road, Suite 6-C
Westbrook, ME 04092
TEL (207) 774-5155
FAX (207) 228-0909

MAINE TURNPIKE

THE GOLD STAR MEMORIAL HIGHWAY

MTA PROJECT MANAGER: William Yates

WEST GARDINER BARRIER TOLL PLAZA ORT CONVERSION

ELECTRICAL DETAILS

SHEET NUMBER: E-14

CONTRACT:2015.11

Filename: 110_Electrical Details.DGN

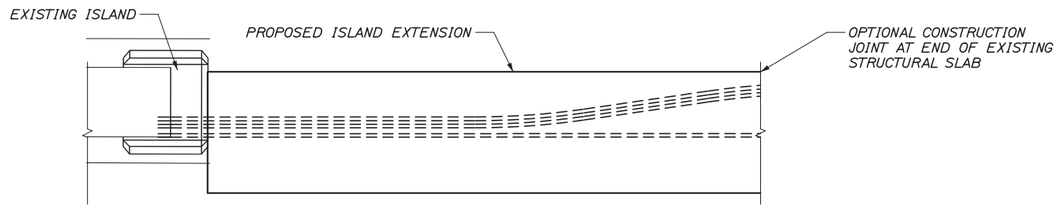

PLAN VIEW

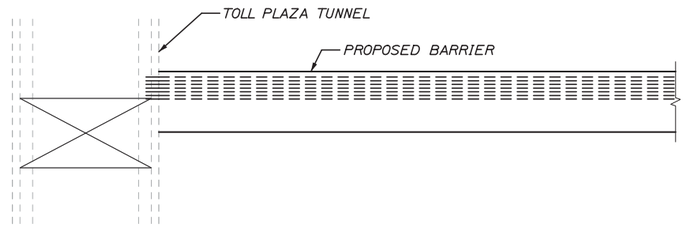

PLAN VIEW

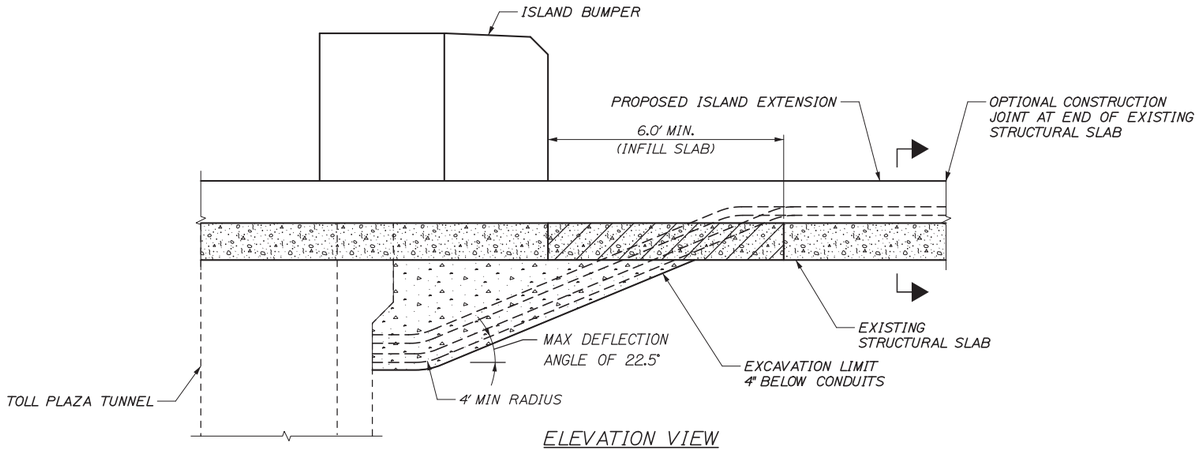

ELEVATION VIEW

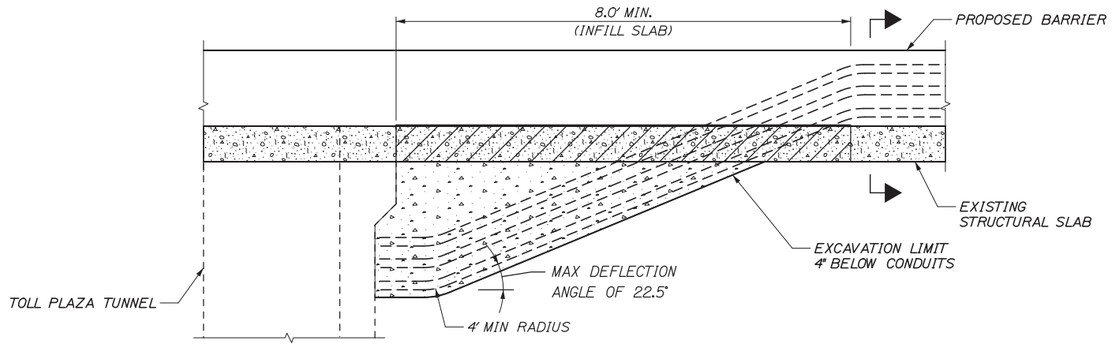

ELEVATION VIEW

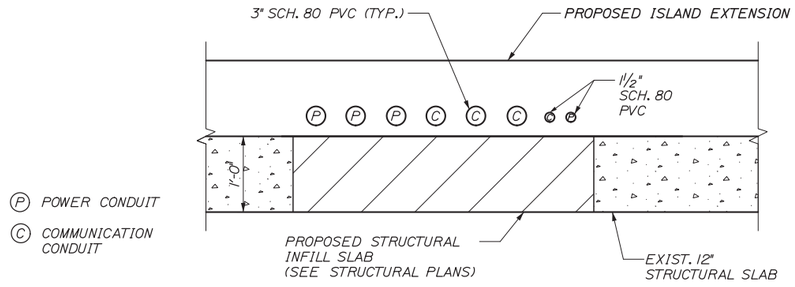

SECTION VIEW
WEST GARDINER CONDUIT SWEEP DETAIL
PROPOSED ISLAND EXTENSION
(NOT TO SCALE)

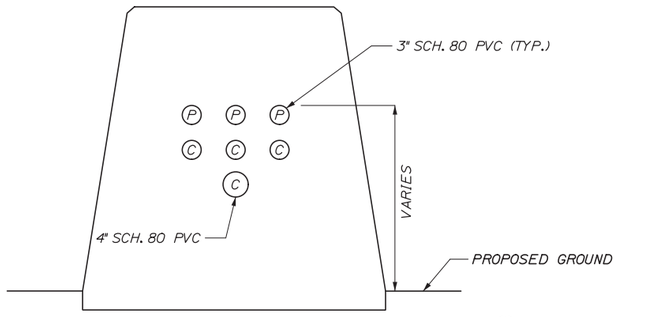

SECTION VIEW
WEST GARDINER CONDUIT SWEEP DETAIL
PROPOSED BARRIER
(NOT TO SCALE)

ISLAND EXTENSION NOTES:

1. HORIZONTAL SPACING BETWEEN CONDUITS SHALL BE 3" MIN. CLEARANCE FROM EDGE OF ISLAND EXTENSION SHALL BE 3".
2. DEPTH OF CONDUIT VARIES FROM BELOW STRUCTURAL SLAB AT THE TUNNEL PENETRATION TO ENCASEMENT IN THE ISLAND EXTENSION.
3. CONDUIT INSTALLED IN THE ISLAND EXTENSION SLAB SHALL BE INSTALLED SIDE BY EACH.
3. SEE SPECIFICATION 655 CONCRETE INCASTED CONDUIT.
4. SEE SHEET S-15 FOR INFILL SLAB DETAILS.

BARRIER NOTES:

1. CONDUIT CONFIGURATION RUN IN CONCRETE BARRIER SHALL BE FIELD DETERMINED.

Scale:

No.	Revision	By	Date

Designed by: HNTB

CONSULTANT PROJECT MANAGER: R. Bruce Munger, P.E.

	By	Date		By	Date
Designed	LB	02/15	Checked	JC	02/15
Drawn	MPC	02/15	In Charge of	RAL	02/15

HNTB CORPORATION
340 County Road, Suite 6-C
Westbrook, ME 04092
TEL (207) 774-5155
FAX (207) 228-0909

MAINE TURNPIKE

THE GOLD STAR MEMORIAL HIGHWAY

MTA PROJECT MANAGER: William Yates

WEST GARDINER BARRIER TOLL PLAZA ORT CONVERSION

CONDUIT DETAIL

SHEET NUMBER: E-15

CONTRACT:2015.11

Date:2/13/2015

Date:2/13/2015

Filename: 111_Conduit Detail.DGN

Date:2/13/2015

LEGEND

PROPOSED EXISTING FUTURE

EQUIPMENT

WIRING

PLAZA LOCATION

NB SPACE FRAME

(4) AVI

(6) VCARS

(2) DVAS

SPACE FRAME LIGHTS

SB SPACE FRAME

SPACE FRAME LIGHTS

(2) DVAS

(6) VCARS

(4) AVI

COMM (130-134)

DIRTY POWER

COMM (140)

CLEAN POWER (250-252)

CLEAN POWER (220-243)

COMM (150-167)

NB ORT LANES

IVIS SENSOR LOOPS

LOOP LEADS

BARRIER JUNCTION BOXES

NB AVI CABINET

AVI READER NB ORT

QUAD OUTLET BOX

SB AVI CABINET

AVI READER SB ORT

SB ORT LANES

IVIS SENSOR LOOPS

HOMERUN CABLES (101-122)

SERVER ROOM IN UTILITY BUILDING

100AMP UPS

L5-30R RECEPTACLE

CLEAN POWER (201)

TUNNEL

TUNNEL

TUNNEL

DIRTY POWER PANEL SERVING LANES 2 AND 7

AVI READER CASH LANES

AVI SYNC CABLE (174)

COMM (135 & 137)

CLEAN POWER (270-273)

AVI SYNC CABLE (172)

DIRTY POWER

COMM (136)

COMM (136)

60 AMP CLEAN POWER PANEL (ORT LANES)

NB ORT LANE CONTROLLER (WITH THREE 20AMP CIRCUITS TO THREE QUAD OUTLET BOXES)

SB ORT LANE CONTROLLER (WITH THREE 20AMP CIRCUITS TO THREE QUAD OUTLET BOXES)

CLEAN POWER (210-218)

CLEAN POWER (210-218)

UPS

CLEAN POWER PANEL (CASH LANES)

SERVER RACK (WITH FIBER SWITCH)

CLEAN POWER (202-206)

IVIS SYNC CABLE (170-174)

ORT LAN NETWORK FIBER (102)

ORT LAN NETWORK FIBER (102)

CASH LANE LAN NETWORK FIBER (101)

CASH LANE LAN NETWORK FIBER (101)

CASH LANE LAN NETWORK FIBER (101)

CASH LANE LAN NETWORK FIBER (101)

SYNC CABLE

SYNC CABLE

LANE 1 LANE CONTROLLER

SYNC CABLE

LANE 2 LANE CONTROLLER

LANE 7 LANE CONTROLLER

SYNC CABLE

LANE 8 LANE CONTROLLER

FIBER (SEE NOTE 1)

HAR STATION

NOTES:

1. FIBER SHALL RUN FROM THE HAR STATION TO THE UTILITY BUILDING THRU EXISTING CONDUIT. SEE SHEETS GP-02 AND GP-03 FOR LOCATION.

Filename: 112_Riser Diagram.dgn

Scale:

No.	Revision	By	Date

Designed by: HNTB

CONSULTANT PROJECT MANAGER: R. Bruce Munger, P.E.

	By	Date		By	Date
Designed	LB	02/15	Checked	JC	02/15
Drawn	MPC	02/15	In Charge of	RAL	02/15

HNTB CORPORATION
340 County Road, Suite 6-C
Westbrook, ME 04092
TEL (207) 774-5155
FAX (207) 228-0909

MAINE TURNPIKE

THE GOLD STAR MEMORIAL HIGHWAY

MTA PROJECT MANAGER: William Yates

WEST GARDINER BARRIER TOLL PLAZA ORT CONVERSION

ORT RISER DIAGRAM

SHEET NUMBER: E-16

CONTRACT:2015.11

Date:2/13/2015

Wiring Shown Below is for one Cash Lane only. Duplicate for Lanes 1, 2, 7, and 8.

CASH LANE LAN Network Fiber (Install MM Fiber, 4 conductor minimum, direct between each ORT and HOST Switch)

RISER DIAGRAM NUMBER	WIRE LABEL	DESCRIPTION	STRAND	COLOR	CORE	JACKET	FROM	TO	TERMINATION
101	(Lane #) (Sw#. /H(Sw#)	PRIMARY LAN NETWORK CONNECTION (Gigabit) (Multimode Fiber 4 Conductor(TYP), 62.5/125 MICRONS INDOOR/OUTDOOR RISER RATED) See Notes.	6 Strand	BLUE ORANGE GREEN BROWN (SLATE) (WHITE)	N/A	Direct Burial Grade (see Note)	Plaza Network Server fiber patch panel, switch blade, or fiber line termination unit	Cash Lane (Lane #) Server Cabinet/Back Panel Fiber Line Termination Unit or Fiber Patch Panel	Terminate ST each end (all strands), Supply Duplex 6m ST-ST Patch Cord

Wiring Shown Below is for one direction of ORT travel only. Duplicate for second ORT direction of travel.

ORT SYSTEMS NETWORK AND DATA WIRING

ORT LAN Network Fiber (Install MM Fiber, 4 conductor minimum, direct between each ORT and HOST Switch)

RISER DIAGRAM NUMBER	WIRE LABEL	DESCRIPTION	STRAND	COLOR	CORE	JACKET	FROM	TO	TERMINATION
102	(ORT#)(Sw#. /H(Sw#)	PRIMARY LAN NETWORK CONNECTION (Gigabit) (Multimode Fiber 4 Conductor(TYP), 62.5/125 MICRONS INDOOR/OUTDOOR RISER RATED) See Notes.	6 Strand	BLUE ORANGE GREEN BROWN (SLATE) (WHITE)	N/A	Direct Burial Grade (see Note)	Plaza Network Server fiber patch panel, switch blade, or fiber line termination unit	Lane Equipment Room ORT Server Cabinet/Back Panel Fiber Line Termination Unit or Fiber Patch Panel	Terminate ST each end (all strands), Supply Duplex 6m ST-ST Patch Cord

Intelligent Vehicle Identification System (IVIS™) (Install Home Run Lead between Lane Sensor Junction Box and ORT Lane Server Rack Tip Out - Leave 10' service loop in Electrical Gutter)

RISER DIAGRAM NUMBER	WIRE LABEL	DESCRIPTION	AWG	COLOR	CORE	JACKET	FROM	TO	LANE SERVER TERMINAL #
110	ORT(ORT#).LSIQ	LEFT SHOULDER ORT INTELLIGENT QUEUING (IQ) PRIMARY SENSOR	IMSA 50-2 #16	BLACK	STRANDED	LDPE (TYP)	SHOULDER IQ PRIMARY SENSOR JUNCTION BOX	ORT CABINET - IVIS SENSOR LEADS ARE SPLICED TO A HOME RUN CABLE (IMSA 50-2, 16AWG) AT THE JUNCTION BOX. THE HOME RUN CABLE IS TERMINATED BY UTS AT THE ORT SERVER FIELD WIRING RACK. LEAVE 10' SLACK LOOP IN ELECTRICAL GUTTER.	Integrator to terminate
111	ORT(ORT#).LSPP	LEFT SHOULDER ORT PAYPOINT ARRAY PRIMARY SENSOR	IMSA 50-2 #16	BLACK	STRANDED	LDPE (TYP)	SHOULDER PAYPOINT ARRAY PRIMARY SENSOR JUNCTION BOX	ORT CABINET - IVIS SENSOR LEADS ARE SPLICED TO A HOME RUN CABLE (IMSA 50-2, 16AWG) AT THE JUNCTION BOX. THE HOME RUN CABLE IS TERMINATED BY UTS AT THE ORT SERVER FIELD WIRING RACK. LEAVE 10' SLACK LOOP IN ELECTRICAL GUTTER.	Integrator to terminate
112	ORT(ORT#).L1IQ	TRAVEL LANE 1 ORT INTELLIGENT QUEUING (IQ) PRIMARY SENSOR	IMSA 50-2 #16	BLACK	STRANDED	LDPE (TYP)	SHOULDER IQ PRIMARY SENSOR JUNCTION BOX	ORT CABINET - IVIS SENSOR LEADS ARE SPLICED TO A HOME RUN CABLE (IMSA 50-2, 16AWG) AT THE JUNCTION BOX. THE HOME RUN CABLE IS TERMINATED BY UTS AT THE ORT SERVER FIELD WIRING RACK. LEAVE 10' SLACK LOOP IN ELECTRICAL GUTTER.	Integrator to terminate
113	ORT(ORT#).L1G1	TRAVEL LANE 1 ORT PAYPOINT ARRAY GRADIENT SENSOR #1	IMSA 50-2 #16	BLACK	STRANDED	LDPE (TYP)	SHOULDER PAYPOINT ARRAY GRADIENT SENSOR #1 JUNCTION BOX	ORT CABINET - IVIS SENSOR LEADS ARE SPLICED TO A HOME RUN CABLE (IMSA 50-2, 16AWG) AT THE JUNCTION BOX. THE HOME RUN CABLE IS TERMINATED BY UTS AT THE ORT SERVER FIELD WIRING RACK. LEAVE 10' SLACK LOOP IN ELECTRICAL GUTTER.	Integrator to terminate
114	ORT(ORT#).L1PP	TRAVEL LANE 1 ORT PAYPOINT ARRAY PRIMARY SENSOR					SHOULDER PAYPOINT ARRAY PRIMARY SENSOR JUNCTION BOX		
115	ORT(ORT#).L1G2	TRAVEL LANE 1 ORT PAYPOINT ARRAY GRADIENT SENSOR #2					SHOULDER PAYPOINT ARRAY GRADIENT SENSOR #2 JUNCTION BOX		
116	ORT(ORT#).RSIQ	RIGHT SHOULDER ORT INTELLIGENT QUEUING (IQ) PRIMARY SENSOR	IMSA 50-2 #16	BLACK	STRANDED	LDPE (TYP)	SHOULDER IQ PRIMARY SENSOR JUNCTION BOX	ORT CABINET - IVIS SENSOR LEADS ARE SPLICED TO A HOME RUN CABLE (IMSA 50-2, 16AWG) AT THE JUNCTION BOX. THE HOME RUN CABLE IS TERMINATED BY UTS AT THE ORT SERVER FIELD WIRING RACK. LEAVE 10' SLACK LOOP IN ELECTRICAL GUTTER.	Integrator to terminate
117	ORT(ORT#).RSG1	RIGHT SHOULDER ORT PAYPOINT ARRAY GRADIENT SENSOR #1	IMSA 50-2 #16	BLACK	STRANDED	LDPE (TYP)	SHOULDER PAYPOINT ARRAY GRADIENT SENSOR #1 JUNCTION BOX	ORT CABINET - IVIS SENSOR LEADS ARE SPLICED TO A HOME RUN CABLE (IMSA 50-2, 16AWG) AT THE JUNCTION BOX. THE HOME RUN CABLE IS TERMINATED BY UTS AT THE ORT SERVER FIELD WIRING RACK. LEAVE 10' SLACK LOOP IN ELECTRICAL GUTTER.	Integrator to terminate
118	ORT(ORT#).RSPP	RIGHT SHOULDER ORT PAYPOINT ARRAY PRIMARY SENSOR					SHOULDER PAYPOINT ARRAY PRIMARY SENSOR JUNCTION BOX		
119	ORT(ORT#).RSG2	RIGHT SHOULDER ORT PAYPOINT ARRAY GRADIENT SENSOR #2					SHOULDER PAYPOINT ARRAY GRADIENT SENSOR #2 JUNCTION BOX		
120	ORT(ORT#).MS/1_D1	MEDIAN SHOULDER/ TRAVEL LANE 1 ORT DIAMOND SENSOR	IMSA 50-2 #16	BLACK	STRANDED	LDPE (TYP)	SHOULDER DIAMOND SENSOR JUNCTION BOX	ORT CABINET - IVIS SENSOR LEADS ARE SPLICED TO A HOME RUN CABLE (IMSA 50-2, 16AWG) AT THE JUNCTION BOX. THE HOME RUN CABLE IS TERMINATED BY UTS AT THE ORT SERVER FIELD WIRING RACK. LEAVE 10' SLACK LOOP IN ELECTRICAL GUTTER.	Integrator to terminate
121	ORT(ORT#).1/RS_D2	TRAVEL LANE 1/RIGHT SHOULDER ORT DIAMOND SENSOR	IMSA 50-2 #16	BLACK	STRANDED	LDPE (TYP)	SHOULDER DIAMOND SENSOR JUNCTION BOX	ORT CABINET - IVIS SENSOR LEADS ARE SPLICED TO A HOME RUN CABLE (IMSA 50-2, 16AWG) AT THE JUNCTION BOX. THE HOME RUN CABLE IS TERMINATED BY UTS AT THE ORT SERVER FIELD WIRING RACK. LEAVE 10' SLACK LOOP IN ELECTRICAL GUTTER.	Integrator to terminate
122	ORT(ORT#).OS_D3	RIGHT SHOULDER OUTSIDE HALF DIAMOND	IMSA 50-2 #16	BLACK	STRANDED	LDPE (TYP)	SHOULDER DIAMOND SENSOR JUNCTION BOX	ORT CABINET - HALF DIAMOND SENSOR LEADS ARE SPLICED TO A HOME RUN CABLE (IMSA 50-2, 16AWG) AT THE JUNCTION BOX. THE HOME RUN CABLE IS TERMINATED BY UTS AT THE ORT SERVER FIELD WIRING RACK. LEAVE 10' SLACK LOOP IN ELECTRICAL GUTTER.	Integrator to terminate

FOR NOTES, SEE DATA WIRING SCHEDULE 3.

Filename: 113_Wiring01.dgn

Scale:

No.	Revision	By	Date

Designed by: HNTB

CONSULTANT PROJECT MANAGER: R. Bruce Munger, P.E.

	By	Date		By	Date
Designed	LB	02/15	Checked	JC	02/15
Drawn	MPC	02/15	In Charge of	RAL	02/15

HNTB CORPORATION
340 County Road, Suite 6-C
Westbrook, ME 04092
TEL (207) 774-5155
FAX (207) 228-0909

MAINE TURNPIKE

THE GOLD STAR MEMORIAL HIGHWAY

MTA PROJECT MANAGER: William Yates

WEST GARDINER BARRIER TOLL PLAZA
ORT CONVERSION

ORT DATA WIRING SCHEDULE 1

SHEET NUMBER: E-17

CONTRACT:2015.11

Wiring Shown Below is for one direction of ORT travel only. Duplicate for second ORT direction of travel.

ORT SYSTEMS NETWORK AND DATA WIRING (CONTINUED)

Video Capture and Recognition System (VCARS™)

RISER DIAGRAM NUMBER	WIRE LABEL	DESCRIPTION	WIRE	TO	SIGNAL TYPE	ROUTING INSTRUCTIONS	TERMINATION
150	(ORT#)MSH.FVA	MEDIAN SHOULDER VCARS™ FRONT LICENSE PLATE CAMERA A - GIGABIT DATA	4pr/24AWG CAT-5e Burial Grade	RJ45 Both Ends, From VCARS™ Connector Panel Blue 110 Jack to TipOut Designated 110 Jack	GIGABIT ETHERNET	In Gantry, route the 3 cables before connector attachment to VCARS™ Junction Box. Extend using flexible weathertight conduit to VCARS™ access panel cover. Punch and attach weathertight conduit. Attach end connector (RJ45) each end and test to Gigabit s	Termination by Integrator
151	(ORT#)MSH.FVST	MEDIAN SHOULDER VCARS™ FRONT UNIT CONTROL NETWORK AND TRIGGER		RJ45 Both Ends, From VCARS™ Connector Panel Yellow 110 Jack to Designated Switch Port 110 Jack	10/100 ETHERNET 24V DC SWITCHED		Termination by Integrator
152	(ORT#)MSH.FVB	MEDIAN SHOULDER VCARS™ FRONT LICENSE PLATE CAMERA B - GIGABIT DATA		RJ45 Both Ends, From VCARS™ Connector Panel Red 110 Jack to TipOut Designated 110 Jack	GIGABIT ETHERNET		Termination by Integrator
153	(ORT#)MSH.RVA	MEDIAN SHOULDER VCARS™ REAR LICENSE PLATE CAMERA A - GIGABIT DATA	4pr/24AWG CAT-5e Burial Grade	RJ45 Both Ends, From VCARS™ Connector Panel Blue 110 Jack to TipOut Designated 110 Jack	GIGABIT ETHERNET	In Gantry, route the 3 cables before connector attachment to VCARS™ Junction Box. Extend using flexible weathertight conduit to VCARS™ access panel cover. Punch and attach weathertight conduit. Attach end connector (RJ45) each end and test to Gigabit s	Termination by Integrator
154	(ORT#)MSH.RVST	MEDIAN SHOULDER VCARS™ REAR UNIT CONTROL NETWORK AND TRIGGER		RJ45 Both Ends, From VCARS™ Connector Panel Yellow 110 Jack to Designated Switch Port 110 Jack	10/100 ETHERNET 24V DC SWITCHED		Termination by Integrator
155	(ORT#)MSH.RVB	MEDIAN SHOULDER VCARS™ REAR LICENSE PLATE CAMERA B - GIGABIT DATA		RJ45 Both Ends, From VCARS™ Connector Panel Red 110 Jack to TipOut Designated 110 Jack	GIGABIT ETHERNET		Termination by Integrator
156	(ORT#)L1.FVA	LANE VCARS™ FRONT LICENSE PLATE CAMERA A - GIGABIT DATA	4pr/24AWG CAT-5e Burial Grade	RJ45 Both Ends, From VCARS™ Connector Panel Blue 110 Jack to TipOut Designated 110 Jack	GIGABIT ETHERNET	In Gantry, route the 3 cables before connector attachment to VCARS™ Junction Box. Extend using flexible weathertight conduit to VCARS™ access panel cover. Punch and attach weathertight conduit. Attach end connector (RJ45) each end and test to Gigabit s	Termination by Integrator
157	(ORT#)L1.FVST	LANE VCARS™ FRONT UNIT CONTROL NETWORK AND TRIGGER		RJ45 Both Ends, From VCARS™ Connector Panel Yellow 110 Jack to Designated Switch Port 110 Jack	10/100 ETHERNET 24V DC SWITCHED		Termination by Integrator
158	(ORT#)L1.FVB	LANE VCARS™ FRONT LICENSE PLATE CAMERA B - GIGABIT DATA		RJ45 Both Ends, From VCARS™ Connector Panel Red 110 Jack to TipOut Designated 110 Jack	GIGABIT ETHERNET		Termination by Integrator
159	(ORT#)L1.RVA	LANE VCARS™ REAR LICENSE PLATE CAMERA A - GIGABIT DATA	4pr/24AWG CAT-5e Burial Grade	RJ45 Both Ends, From VCARS™ Connector Panel Blue 110 Jack to TipOut Designated 110 Jack	GIGABIT ETHERNET	In Gantry, route the 3 cables before connector attachment to VCARS™ Junction Box. Extend using flexible weathertight conduit to VCARS™ access panel cover. Punch and attach weathertight conduit. Attach end connector (RJ45) each end and test to Gigabit s	Termination by Integrator
160	(ORT#)L1.RVST	LANE VCARS™ REAR UNIT CONTROL NETWORK AND TRIGGER		RJ45 Both Ends, From VCARS™ Connector Panel Yellow 110 Jack to Designated Switch Port 110 Jack	10/100 ETHERNET 24V DC SWITCHED		Termination by Integrator
161	(ORT#)L1.RVB	LANE VCARS™ REAR LICENSE PLATE CAMERA B - GIGABIT DATA		RJ45 Both Ends, From VCARS™ Connector Panel Red 110 Jack to TipOut Designated 110 Jack	GIGABIT ETHERNET		Termination by Integrator
162	(ORT#)L1.FVA	OUTSIDE SHOULDER VCARS™ FRONT LICENSE PLATE CAMERA A - GIGABIT DATA	4pr/24AWG CAT-5e Burial Grade	RJ45 Both Ends, From VCARS™ Connector Panel Blue 110 Jack to TipOut Designated 110 Jack	GIGABIT ETHERNET	In Gantry, route the 3 cables before connector attachment to VCARS™ Junction Box. Extend using flexible weathertight conduit to VCARS™ access panel cover. Punch and attach weathertight conduit. Attach end connector (RJ45) each end and test to Gigabit s	Termination by Integrator
163	(ORT#)OSH.FVST	OUTSIDE SHOULDER VCARS™ FRONT UNIT CONTROL NETWORK AND TRIGGER		RJ45 Both Ends, From VCARS™ Connector Panel Yellow 110 Jack to Designated Switch Port 110 Jack	10/100 ETHERNET 24V DC SWITCHED		Termination by Integrator
164	(ORT#)OSH.FVB	OUTSIDE SHOULDER VCARS™ FRONT LICENSE PLATE CAMERA B - GIGABIT DATA		RJ45 Both Ends, From VCARS™ Connector Panel Red 110 Jack to TipOut Designated 110 Jack	GIGABIT ETHERNET		Termination by Integrator
165	(ORT#)OSH.RVA	OUTSIDE SHOULDER VCARS™ REAR LICENSE PLATE CAMERA A - GIGABIT DATA	4pr/24AWG CAT-5e Burial Grade	RJ45 Both Ends, From VCARS™ Connector Panel Blue 110 Jack to TipOut Designated 110 Jack	GIGABIT ETHERNET	In Gantry, route the 3 cables before connector attachment to VCARS™ Junction Box. Extend using flexible weathertight conduit to VCARS™ access panel cover. Punch and attach weathertight conduit. Attach end connector (RJ45) each end and test to Gigabit s	Termination by Integrator
166	(ORT#)OSH.RVST	OUTSIDE SHOULDER VCARS™ REAR UNIT CONTROL NETWORK AND TRIGGER		RJ45 Both Ends, From VCARS™ Connector Panel Yellow 110 Jack to Designated Switch Port 110 Jack	10/100 ETHERNET 24V DC SWITCHED		Termination by Integrator
167	(ORT#)OSH.RVB	OUTSIDE SHOULDER VCARS™ REAR LICENSE PLATE CAMERA B - GIGABIT DATA		RJ45 Both Ends, From VCARS™ Connector Panel Red 110 Jack to TipOut Designated 110 Jack	GIGABIT ETHERNET		Termination by Integrator

FOR NOTES, SEE DATA WIRING SCHEDULE 3.

Date:2/13/2015

Filename: 114_Wiring02.dgn

Scale:

No.	Revision	By	Date

Designed by: HNTB

CONSULTANT PROJECT MANAGER: R. Bruce Munger, P.E.

	By	Date		By	Date
Designed	LB	02/15	Checked	JC	02/15
Drawn	MPC	02/15	In Charge of	RAL	02/15

HNTB CORPORATION
340 County Road, Suite 6-C
Westbrook, ME 04092
TEL (207) 774-5155
FAX (207) 228-0909

MAINE TURNPIKE

THE GOLD STAR MEMORIAL HIGHWAY

MTA PROJECT MANAGER: William Yates

WEST GARDINER BARRIER TOLL PLAZA
ORT CONVERSION

ORT DATA WIRING SCHEDULE 2

Wiring Shown Below is for one direction of ORT travel only. Duplicate for second ORT direction of travel.

ORT SYSTEMS NETWORK AND DATA WIRING (CONTINUED)

Automatic Vehicle Identification System (AVI) (Specifications are for Mark IV Reader)

RISER DIAGRAM NUMBER	WIRE LABEL	DESCRIPTION	AWG	COLOR	CORE	JACKET	FROM	TO	TERMINATION
130	ORT(ORT#).AVI.LSH	LEFT SHOULDER AVI ANTENNA RF CABLE	LMR 400	BLACK	SOLID	PVC	ORT AVI READER	LANE ANTENNA ON THE GANTRY	"N" CONNECTOR (MALE)
131	ORT(ORT#).AVI.LSH/L	LEFT SHOULDER/LANE STRADDLE AVI ANTENNA RF CABLE							
132	ORT(ORT#).AVI.LN(#)	TRAVEL LANE AVI ANTENNA RF CABLE							
133	ORT(ORT#).AVI.LN(#)/RSH	LANE/RIGHT SHOULDER STRADDLE AVI ANTENNA RF CABLE							
135	ORT(ORT#).AVI DATA P	AVI SERIAL DATA PRIMARY	4pr/24	N/A	STRANDED	PVC	ORT AVI READER	CORRESPONDING ORT CABINET SERIAL TO ETHERNET AVI SWITCH PORT	Integrator to terminate
136	ORT(ORT#).AVI DATA S	AVI SERIAL DATA SECONDARY	4pr/24	N/A	STRANDED	PVC	ORT AVI READER	OPPOSITE DIRECTION ORT CABINET SERIAL TO ETHERNET AVI SWITCH PORT	Integrator to terminate
137	ORT(ORT#).AVI DATA M	AVI SERIAL DATA MAINTENANCE	4pr/24	N/A	STRANDED	PVC	ORT AVI READER	CORRESPONDING ORT CABINET SERIAL TO ETHERNET AVI SWITCH PORT	Integrator to terminate

Digital Video Audit System (DVAS)

RISER DIAGRAM NUMBER	WIRE LABEL	DESCRIPTION	AWG	COLOR	CORE	JACKET	FROM	TO	TERMINATION
140	ORT#.PPDVAS.NET	ORT PAYPOINT DVAS DATA	4pr/24	BLACK	CAT5e STRANDED	Direct Burial Grade (see Note)	DVAS Camera Housing via Gantry Junction Box (Allow sufficient wire length for flexible conduit extension to camera location)	Server Room Network Switch Port or Patch Panel assigned port/jack	RJ-45 both ends

Wiring Shown Below serves both ORT Zones. (Only one of each cable is required for the project.)

System Synchronization Cables (Only one of each required per system. Do not duplicate for second ORT zone)

RISER DIAGRAM NUMBER	WIRE LABEL	DESCRIPTION	AWG	COLOR	CORE	JACKET	FROM	TO	TERMINATION
170	ORTNB/ORTSB SYNC	IVIS SYNCHRONIZATION CABLE	4pr/24 CAT5e	BLACK	STRANDED	Direct Burial Grade (see Note)	ORT NB CABINET (LEAVE 10' SLACK LOOP in CABINET)	ORT SB CABINET (LEAVE 10' SLACK LOOP IN CABINET)	TERMINATION BY INTEGRATOR
171	ORT NB/ CASHLN8 SYNC	IVIS SYNCHRONIZATION CABLE	4pr/24 CAT5e	BLACK	STRANDED	Direct Burial Grade (see Note)	ORT NB CABINET (LEAVE 10' SLACK LOOP in CABINET)	CASH LANE 8 LANE CONTROLLER CABINET LOCATION	TERMINATION BY INTEGRATOR
172	ORT NB/ORTSB AVI SYNC	MARK IV READER SYNCHRONIZATION CABLE NB ORT TO SB ORT	4pr/24	BLACK	STRANDED	Direct Burial Grade (see Note)	ORT NB AVI READER CABINET (LEAVE 6' SLACK LOOP in CABINET)	ORT SB AVI READER CABINET (LEAVE 6' SLACK LOOP IN CABINET)	TERMINATION BY INTEGRATOR
173	ORT NB/ CASH LN8 SYNC	MARK IV READER SYNCHRONIZATION CABLE NB ORT TO LANE 8	4pr/24	BLACK	STRANDED	Direct Burial Grade (see Note)	ORT NB AVI READER CABINET (LEAVE 6' SLACK LOOP in CABINET)	LANE 8 AVI READER CABINET (LEAVE 6' SLACK LOOP IN CABINET)	TERMINATION BY INTEGRATOR
174	ORT SB/ CASH LN3 SYNC	MARK IV READER SYNCHRONIZATION CABLE SB ORT TO LANE 3	4pr/24	BLACK	STRANDED	Direct Burial Grade (see Note)	ORT NB AVI READER CABINET (LEAVE 6' SLACK LOOP in CABINET)	LANE 3 AVI READER CABINET (LEAVE 6' SLACK LOOP IN CABINET)	TERMINATION BY INTEGRATOR

NOTES:

1) Lane Numbering as shown in plan set. Replace in label with correct lane #.
2) IVIS HOME RUN: THE SENSOR LEADS ARE TO BE TWISTED TIGHT, SOLDERED, SHRINK-WRAPPED (WATERPROOFED) AND ENCLOSED IN A KLIK-IT WIRING DEVICE TO THE IVIS "HOMERUN" CABLE (IMSA 50-2, #16AWG) AT THE JUNCTION BOX.
3) ALL WIRE INSTALLED IN CONDUIT MUST BE BURIAL GRADE, SUITABLE FOR WET LOCATIONS.
4) LEAVE 3' SLACK LOOPS IN JUNCTION BOXES. LEAVE 6' CABLE AT JUNCTION BOX IF TERMINATION NOT SPECIFIED. FOR FIBER TO EXISTING CASH LANE CONTROLLERS LEAVE 6' OF SLACK LOOPED TO PREPARE FOR FUTURE INSTALLATIONS.
5) Direct Burial cable may not be extended more than 50' exposed into a structure due to fire codes. Check with local fire/electrical code before installing.

Date:2/13/2015

Filename: 115_Wiring03.dgn

Scale:

No.	Revision	By	Date

Designed by: HNTB

CONSULTANT PROJECT MANAGER: R. Bruce Munger, P.E.

	By	Date		By	Date
Designed	LB	02/15	Checked	JC	02/15
Drawn	MPC	02/15	In Charge of	RAL	02/15

HNTB CORPORATION
340 County Road, Suite 6-C
Westbrook, ME 04092
TEL (207) 774-5155
FAX (207) 228-0909

MAINE TURNPIKE

THE GOLD STAR MEMORIAL HIGHWAY

MTA PROJECT MANAGER: William Yates

WEST GARDINER BARRIER TOLL PLAZA
ORT CONVERSION

ORT DATA WIRING SCHEDULE 3

SHEET NUMBER: E-19

CONTRACT:2015.11

Date:2/13/2015

Plaza Host Server Equipment Room (Electrician Responsibilities - Includes pull strings, wire, conduit, trays, boxes and termination)

RISER DIAGRAM NUMBER	WIRE LABEL (SOURCE.CIRCUIT.DESTINATION)	DESCRIPTION	AWG or PER CODE	COLOR	CORE	JACKET	VOLTAGE	CIRCUIT BREAKER	FROM	TO	TERMINATION REQUIREMENTS
SERVER RACK PDU (Required when omitting supplied internal server cabinet UPS)											
201	N/A	TRIPPLITE 2430 PDU OR EQUIVALENT PDU WITH MINIMUM 8 OUTLETS (1U, 30A PDU with L5-30P, 15' cable). See Note #3	N/A				120 VAC	30A	L5-30R DEDICATED WALL RECEPTACLE	COMMUNICATIONS/SERVER CABINET REAR PANEL	MOUNT IN SEVER CABINET REAR
60 AMP PANEL SERVING ORT CABINETS											
202	(Panel#).(Ckt #)H1.UPS	POWER(120V-HOT)	#4	BLACK OR PER LOCAL CODE	STRANDED	THHW	240 VAC		SUB-PANEL IN TUNNEL	60 AMP CLEAN POWER SUB-PANEL ASSIGNED CIRCUIT BREAKER	PER LOCAL CODE
203	(Panel#).(Ckt #)H2.UPS	POWER(120V-HOT)		RED OR PER LOCAL CODE							
204	(Panel#).(Ckt #)N.UPS	POWER(120V-NEUTRAL)		WHITE							
205	(Panel#).G	GROUND		GREEN							
206	(Panel#).IG	ISOLATED GROUND	#10	GREEN W/ YELLOW STRIPE							

NOTES:

GENERAL NOTES:	1) WORKSTATION AND LIVE VIEWER STATION, MISC PRINTER POWER WILL UTILIZE EXISTING 120V WALL OUTLETS IN PLAZA BUILDING
	2) Electrical installer to provide and install panels, breakers, disconnects, outlets, wire, conduit, junction boxes noted above.
	3) Deleting the UTS supplied UPS requires installation of a 30A PDU with L5-30P, not supplied by UTS. Cabinet Power Monitoring Function will not be available with PDU.
LABELING NOTES:	(Panel#).(Ckt #) will have to be replaced with the Panel ID and circuit/breaker number that this wire is connected to.

Wiring Shown is for one direction of travel only. Duplicate for second ORT direction of travel.

ORT ZONE EQUIPMENT ROOM (Electrician Responsibilities - Includes pull strings, wire, conduit, trays, boxes and termination)

RISER DIAGRAM NUMBER	WIRE LABEL (SOURCE.CIRCUIT.DESTINATION)	DESCRIPTION	AWG or PER CODE	COLOR	CORE	JACKET	VOLTAGE	CIRCUIT BREAKER	FROM	TO	TERMINATION REQUIREMENTS
ORT UPS (Lane Equipment) (APC 3000) RECEPTACLE (3ea 20A circuits to individual Quad Outlet Boxes mounted in ORT cabinet)											
210	(Panel#).(Ckt #)H.ORT(#)Q1	ORT TIPOUT 1-4 DEDICATED RECEPTACLE POWER(120V-HOT)	#12	BLACK OR PER LOCAL CODE	STRANDED	THHW	120 VAC	20A	CLEAN POWER SUBPANEL ASSIGNED CIRCUIT BREAKER	ORT CABINET 1 QUAD OUTLET#1	STANDARD QUAD OUTLET WITH RECEPTACLES COLOR CODED FOR CLEAN POWER
211	(Panel#).(Ckt #)N.ORT(#)Q1	ORT TIPOUT 1-4 DEDICATED RECEPTACLE POWER(120V-NEUTRAL)		WHITE							
212	(Panel#).G	GROUND		GREEN							
213	(Panel#).(Ckt #)H.ORT(#)Q2	ORT TIPOUT 5-6 DEDICATED RECEPTACLE POWER(120V-HOT)	#12	BLACK OR PER LOCAL CODE	STRANDED	THHW	120 VAC	20A	CLEAN POWER SUBPANEL ASSIGNED CIRCUIT BREAKER	ORT CABINET 1 QUAD OUTLET#2	STANDARD QUAD OUTLET WITH RECEPTACLES COLOR CODED FOR CLEAN POWER
214	(Panel#).(Ckt #)N.ORT(#)Q2	ORT TIPOUT 5-6 AND SWITCH DEDICATED RECEPTACLE POWER(120V-NEUTRAL)		WHITE							
215	(Panel#).G	GROUND		GREEN							
216	(Panel#).(Ckt #)H.ORT(#)Q3	ACCESSORY/FANS RECEPTACLE POWER(120V-HOT)	#12	BLACK OR PER LOCAL CODE	STRANDED	THHW	120 VAC	20A	CLEAN POWER SUBPANEL ASSIGNED CIRCUIT BREAKER	ORT CABINET 1 QUAD OUTLET#3	STANDARD QUAD OUTLET WITH RECEPTACLES COLOR CODED FOR CLEAN POWER
217	(Panel#).(Ckt #)N.ORT(#)Q3	ACCESSORY/FANS DEDICATED RECEPTACLE POWER(120V-NEUTRAL)		WHITE							
218	(Panel#).G	GROUND		GREEN							

NOTES:

	1) Electrical installer to provide and install outlets, wire, conduit, junction boxes noted above.
	2) Lane Server Power Ground (Pin 3 of TipOut connector) should be an isolated ground from plaza UPS Electrical Distribution Panel to avoid electrical noise getting into power distribution. A separate ground is suggested for electrical safety to connect
LABELING NOTES:	(Panel#).(Ckt #) will have to be replaced with the Panel ID and circuit/breaker number that this wire is connected to. (#) is to be replaced with ORT NB or SB or ORT designator as assigned.

Filename: 116_Wiring04.dgn

Scale:

No.	Revision	By	Date

Designed by: HNTB

CONSULTANT PROJECT MANAGER: R. Bruce Munger, P.E.

	By	Date		By	Date
Designed	LB	02/15	Checked	JC	02/15
Drawn	MPC	02/15	In Charge of	RAL	02/15

HNTB CORPORATION
340 County Road, Suite 6-C
Westbrook, ME 04092
TEL (207) 774-5155
FAX (207) 228-0909

MAINE TURNPIKE

THE GOLD STAR MEMORIAL HIGHWAY

MTA PROJECT MANAGER: William Yates

WEST GARDINER BARRIER TOLL PLAZA ORT CONVERSION

ORT POWER WIRING SCHEDULE 1

SHEET NUMBER: E-20

CONTRACT:2015.11

Wiring Shown is for one direction of travel only. Duplicate for second ORT direction of travel.

MEDIAN SHOULDER ORT LANE TYPE GANTRY POWER WIRING SCHEDULE (Electrician Responsibilities - Includes pull strings, wire, conduit, trays, boxes and termination)

RISER DIAGRAM NUMBER	WIRE LABEL (SOURCE.CIRCUIT.DESTINATION)	DESCRIPTION	MIN AWG *1	COLOR	CORE	JACKET	VOLTAGE	CIRCUIT BREAKER	FROM	TO	TERMINAL #	TERMINATION REQUIREMENTS
FRONT VCARS™												
220	(Panel#) (Ckt #).(ORT#)FVLMS	FRONT VCARS™ POWER (HOT, NON-SWITCHED)	14	BLACK OR PER LOCAL CODE	STRANDED	THHW or SOW	120 VAC	15	CLEAN (UPS) POWER DISTRIBUTION PANEL CIRCUIT BREAKER	VCARS™ FIELD WIRING TERMINATION CONNECTOR	V1-1	6X6X4 JUNCTION BOX WITH 6' of 1/2" LIQUID TIGHT FLEX CABLE TO VCARS™ LOCATION. LEAVE 8' SLACK IN BOX
221	(Panel#)-.N.(ORT#)FVLMS	FRONT VCARS™ POWER (NEUTRAL)		WHITE							V1-2	
222	(Panel#).IG.(ORT#)FVLMS	FRONT VCARS™ POWER (EQUIPMENT/FACILITY GROUND)		GREEN							V1-3	
223	(Panel#).G.(ORT#)FVLMS	FRONT VCARS™ POWER (ISOLATED (UPS) GROUND)		GREEN W/ YELLOW STRIPE							V1-4	
REAR VCARS™												
224	(Panel#) (Ckt #).(ORT#)RVLMS	REAR VCARS™ POWER (HOT, NON-SWITCHED)	14	BLACK OR PER LOCAL CODE	STRANDED	THHW or SOW	120 VAC	15	CLEAN (UPS) POWER DISTRIBUTION PANEL CIRCUIT BREAKER	VCARS™ FIELD WIRING TERMINATION CONNECTOR	V1-1	6X6X4 JUNCTION BOX WITH 6' of 1/2" LIQUID TIGHT FLEX CABLE TO VCARS™ LOCATION. LEAVE 8' SLACK IN BOX
225	(Panel#)-.N.(ORT#)RVLMS	REAR VCARS™ POWER (NEUTRAL)		WHITE							V1-2	
226	(Panel#).IG.(ORT#)RVLMS	REAR VCARS™ POWER (FACILITY GROUND)		GREEN							V1-3	
227	(Panel#).G.(ORT#)RVLMS	REAR VCARS™ POWER (UPS ISOLATED GROUND)		GREEN W/ YELLOW STRIPE							V1-4	
LANE DIGITAL VIDEO AND AUDIT CAMERA (DVAS)												
250	(Panel#).H.(ORT#)PPDLMS	LANE DVAS PAYPOINT CAMERA ENCLOSURE POWER (HOT - NON-SWITCHED)	14	BLACK OR PER LOCAL CODE	STRANDED	THHW or SOW	120 VAC	15	CLEAN (UPS) POWER DISTRIBUTION PANEL CIRCUIT BREAKER	DVAS CAMERA VIA POWER JUNCTION BOX	AC	6X6X4 JUNCTION BOX WITH 6' of 1/2" LIQUID TIGHT FLEX CABLE TO CAMERA LOCATION. LEAVE 8' SLACK IN BOX
251	(Panel#).N.(ORT#)PPDLMS	LANE DVAS PAYPOINT CAMERA ENCLOSURE POWER (NEUTRAL)		WHITE						INSTALL 3A IN-LINE FUSE, EXTERNAL BELL SWITCH AND TRANSITION TO #14AWG FROM BOX TO CAMERA	IN	
252	(Panel#).G.(ORT#)PPDLMS	LANE DVAS PAYPOINT CAMERA ENCLOSURE POWER (GROUND)		GREEN							Case Gnd Lug Only*/2	

LANE 1 ORT LANE TYPE GANTRY POWER WIRING SCHEDULE

RISER DIAGRAM NUMBER	WIRE LABEL (SOURCE.CIRCUIT.DESTINATION)	DESCRIPTION	MIN AWG *1	COLOR	CORE	JACKET	VOLTAGE	CIRCUIT BREAKER	FROM	TO	TERMINAL #	TERMINATION REQUIREMENTS
FRONT VCARS™												
228	(Panel#) (Ckt #).FVL1	FRONT VCARS™ POWER (HOT, NON-SWITCHED)	14	BLACK OR PER LOCAL CODE	STRANDED	THHW or SOW	120 VAC	15	CLEAN (UPS) POWER DISTRIBUTION PANEL CIRCUIT BREAKER	VCARS™ FIELD WIRING TERMINATION CONNECTOR	V1-1	6X6X4 JUNCTION BOX WITH 6' of 1/2" LIQUID TIGHT FLEX CABLE TO VCARS™ LOCATION. LEAVE 8' SLACK IN BOX
229	(Panel#)-.N.FVL1	FRONT VCARS™ POWER (NEUTRAL)		WHITE							V1-2	
230	(Panel#).IG.FVL1	FRONT VCARS™ POWER (EQUIPMENT/FACILITY GROUND)		GREEN							V1-3	
231	(Panel#).G.FVL1	FRONT VCARS™ POWER (ISOLATED (UPS) GROUND)		GREEN W/ YELLOW STRIPE							V1-4	
REAR VCARS™												
232	(Panel#) (Ckt #).RVL1	REAR VCARS™ POWER (HOT, NON-SWITCHED)	14	BLACK OR PER LOCAL CODE	STRANDED	THHW or SOW	120 VAC	15	CLEAN (UPS) POWER DISTRIBUTION PANEL CIRCUIT BREAKER	VCARS™ FIELD WIRING TERMINATION CONNECTOR	V1-1	6X6X4 JUNCTION BOX WITH 6' of 1/2" LIQUID TIGHT FLEX CABLE TO VCARS™ LOCATION. LEAVE 8' SLACK IN BOX
233	(Panel#)-.N.RVL1	REAR VCARS™ POWER (NEUTRAL)		WHITE							V1-2	
234	(Panel#).IG.RVL1	REAR VCARS™ POWER (FACILITY GROUND)		GREEN							V1-3	
235	(Panel#).G.RVL1	REAR VCARS™ POWER (UPS ISOLATED GROUND)		GREEN W/ YELLOW STRIPE							V1-4	

FOR NOTES, SEE POWER WIRING SCHEDULE 3.

Date:2/13/2015

Filename: 117_Wiring05.dgn

Scale:

No.	Revision	By	Date

Designed by: HNTB

CONSULTANT PROJECT MANAGER: R. Bruce Munger, P.E.

	By	Date		By	Date
Designed	LB	02/15	Checked	JC	02/15
Drawn	MPC	02/15	In Charge of	RAL	02/15

HNTB CORPORATION
340 County Road, Suite 6-C
Westbrook, ME 04092
TEL (207) 774-5155
FAX (207) 228-0909

MAINE TURNPIKE

THE GOLD STAR MEMORIAL HIGHWAY

MTA PROJECT MANAGER: William Yates

WEST GARDINER BARRIER TOLL PLAZA
ORT CONVERSION

ORT POWER WIRING SCHEDULE 2

SHEET NUMBER: E-21

CONTRACT:2015.11

Wiring Shown is for one direction of travel only. Duplicate for second ORT direction of travel.

OUTSIDE SHOULDER ORT LANE TYPE GANTRY POWER WIRING SCHEDULE

RISER DIAGRAM NUMBER	WIRE LABEL (SOURCE.CIRCUIT.DESTINATION)	DESCRIPTION	MIN AWG *1	COLOR	CORE	JACKET	VOLTAGE	CIRCUIT BREAKER	FROM	TO	TERMINAL #	TERMINATION REQUIREMENTS
FRONT VCARS™												
236	(Panel#) (Ckt #).FVLMS	FRONT VCARS™ POWER (HOT, NON-SWITCHED)	14	BLACK OR PER LOCAL CODE	STRANDED	THHW or SOW	120 VAC	15	CLEAN (UPS) POWER DISTRIBUTION PANEL CIRCUIT BREAKER	VCARS™ FIELD WIRING TERMINATION CONNECTOR	V1-1	6X6X4 JUNCTION BOX WITH 6' of 1/2" LIQUID TIGHT FLEX CABLE TO VCARS™ LOCATION. LEAVE 8' SLACK IN BOX
237	(Panel#)-.N.FVLMS	FRONT VCARS™ POWER (NEUTRAL)		WHITE							V1-2	
238	(Panel#).IG.FVLMS	FRONT VCARS™ POWER (EQUIPMENT/FACILITY GROUND)		GREEN							V1-3	
239	(Panel#).G.FVLMS	FRONT VCARS™ POWER (ISOLATED (UPS) GROUND) *see note 2		GREEN W/ YELLOW STRIPE							V1-4	
REAR VCARS™												
240	(Panel#) (Ckt #).RVOSH	REAR VCARS™ POWER (HOT, NON-SWITCHED)	14	BLACK OR PER LOCAL CODE	STRANDED	THHW or SOW	120 VAC	15	CLEAN (UPS) POWER DISTRIBUTION PANEL CIRCUIT BREAKER	VCARS™ FIELD WIRING TERMINATION CONNECTOR	V1-1	6X6X4 JUNCTION BOX WITH 6' of 1/2" LIQUID TIGHT FLEX CABLE TO VCARS™ LOCATION. LEAVE 8' SLACK IN BOX
241	(Panel#)-.N.RVOSH	REAR VCARS™ POWER (NEUTRAL)		WHITE							V1-2	
242	(Panel#).IG.RVOSH	REAR VCARS™ POWER (FACILITY GROUND)		GREEN							V1-3	
243	(Panel#).G.RVOSH	REAR VCARS™ POWER (UPS ISOLATED GROUND)		GREEN W/ YELLOW STRIPE							V1-4	

SPACE FRAME LIGHTING POWER WIRING SCHEDULE

RISER DIAGRAM NUMBER	WIRE LABEL (SOURCE.CIRCUIT.DESTINATION)	DESCRIPTION	MIN AWG *1	COLOR	CORE	JACKET	VOLTAGE	CIRCUIT BREAKER	FROM	TO	TERMINATION REQUIREMENTS
SPACE FRAME LIGHTING											
260	(Panel#) (Ckt #).LHT	SPACE FRAME LIGHTING POWER (HOT, NON-SWITCHED)	12	BLACK OR PER LOCAL CODE	STRANDED	THHN	120 VAC	20A	DIRTY POWER PANEL IN TUNNEL SERVING CASH LANE 8	LED LIGHTING FIXUTRES IN CANOPY	ACCORDING TO MANUFACTURERS RECOMMENDATION
261	(Panel#)-.N.LHT	SPACE FRAME LIGHTING POWER (NEUTRAL)		WHITE							
262	(Panel#).G.LHT	SPACE FRAME LIGHTING POWER (GROUND)		GREEN							

AVI READER POWER WIRING SCHEDULE

RISER DIAGRAM NUMBER	WIRE LABEL (SOURCE.CIRCUIT.DESTINATION)	DESCRIPTION	MIN AWG *1	COLOR	CORE	JACKET	VOLTAGE	CIRCUIT BREAKER	FROM	TO	TERMINATION REQUIREMENTS
AVI BADGER READER™											
270	(Panel#) (Ckt #).AVI	AVI READER POWER (HOT, NON-SWITCHED)	14	BLACK OR PER LOCAL CODE	STRANDED	THHW or SOW	120 VAC	15	CLEAN (UPS) POWER DISTRIBUTION PANEL CIRCUIT BREAKER	QUAD OUTLET BOX IN AVI READER CABINET	ACCORDING TO MANUFACTURERS RECOMMENDATION
271	(Panel#)-.N.AVI	AVI READER POWER (NEUTRAL)		WHITE							
272	(Panel#).IG.AVI	AVI READER POWER (EQUIPMENT/FACILITY GROUND)		GREEN							
273	(Panel#).G.AVI	AVI READER POWER (ISOLATED (UPS) GROUND)		GREEN W/ YELLOW STRIPE							

NOTES:

GENERAL NOTES:	**1) Wire to be sized and colored according to local codes and breaker current limits. VCARS™ requires 10A service minimum. Breakers and Wire Size Shown is typical.**
	2) Power Ground to VCARS™ should be an isolated ground from plaza UPS electrical distribution panel to avoid electrical noise getting into power distribution. A separate ground is suggested for electrical safety. If only one ground is provided by the
LABELING NOTES:	**Label format identifies: Source Device-Connector-(Pin) . (Hot, Neutral, Ground, Isolated Ground).Destination Device-Connector-(Pin)**

Date:2/13/2015

Filename: 118_Wiring06.dgn

Scale:

No.	Revision	By	Date

Designed by: HNTB

CONSULTANT PROJECT MANAGER: R. Bruce Munger, P.E.

	By	Date		By	Date
Designed	LB	02/15	Checked	JC	02/15
Drawn	MPC	02/15	In Charge of	RAL	02/15

HNTB CORPORATION
340 County Road, Suite 6-C
Westbrook, ME 04092
TEL (207) 774-5155
FAX (207) 228-0909

MAINE TURNPIKE

THE GOLD STAR MEMORIAL HIGHWAY

MTA PROJECT MANAGER: William Yates

WEST GARDINER BARRIER TOLL PLAZA
ORT CONVERSION

ORT POWER WIRING SCHEDULE 3

SHEET NUMBER: E-22

CONTRACT:2015.11