RAMP J OVER RTE. 1 SB & RAMP M (MM 1.59)

B. P. R. REG. NO.	STATE	PROJECT NUMBER	SHEET NO.	TOTAL SHEETS
1	MAINE	I-95-1 (5)	39	199

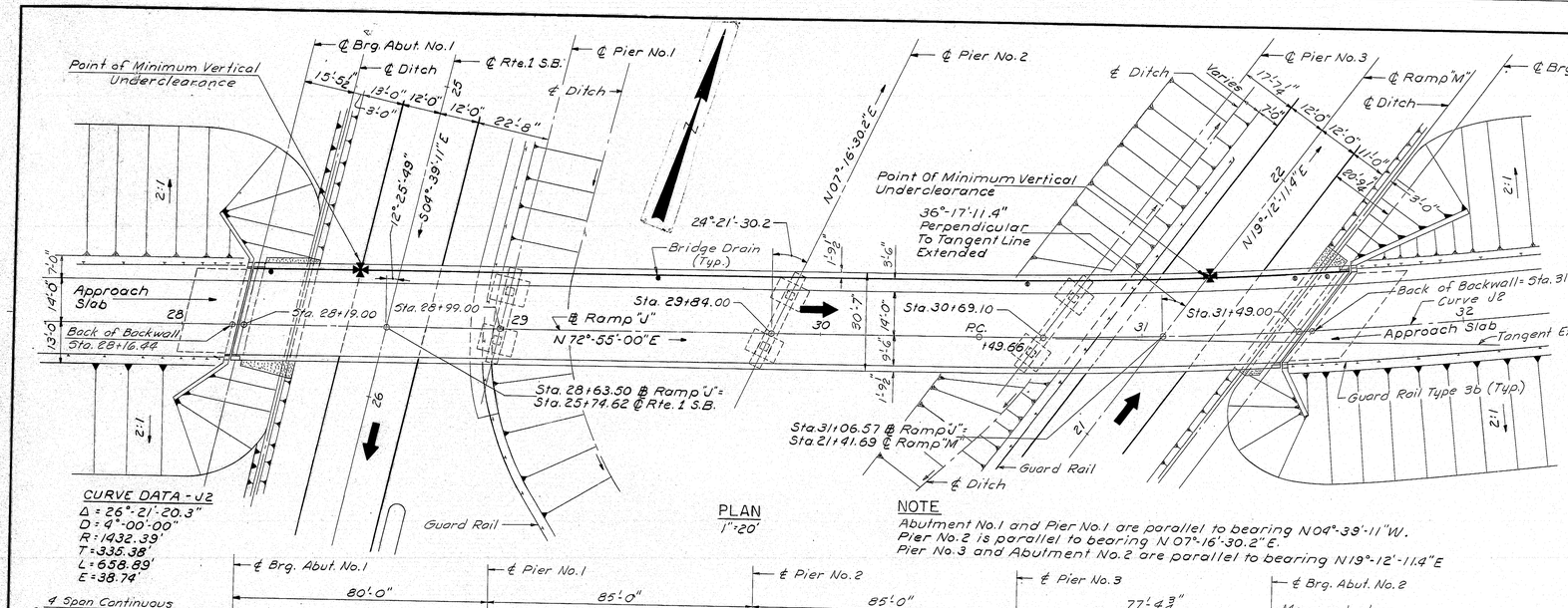

PLAN
1" = 20'

CURVE DATA - J2
Δ = 26°-21'-20.3"
D = 4°-00'-00"
R = 1432.39'
T = 335.38'
L = 658.89'
E = 38.74'

NOTE
Abutment No.1 and Pier No.1 are parallel to bearing N04°-39'-11"W.
Pier No.2 is parallel to bearing N 07°-16'-30.2" E.
Pier No.3 and Abutment No.2 are parallel to bearing N19°-12'-11.4" E

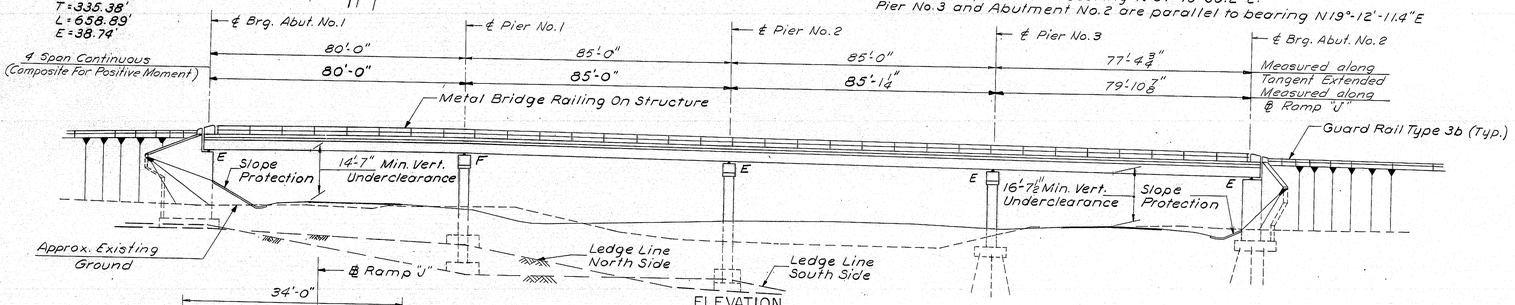

ELEVATION
1" = 20'

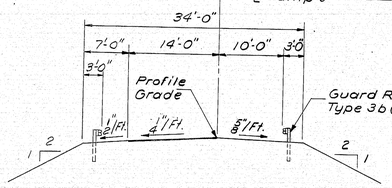

APPROACH SECTION
1" = 10'
(At Station 26+50)

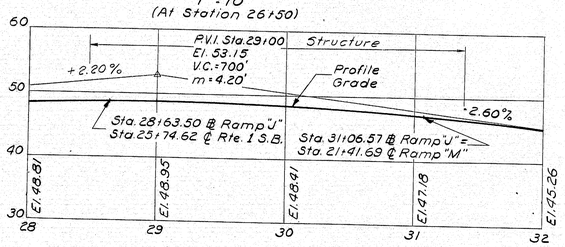

PROFILE - RAMP "J"
Hor. 1" = 50'
Vert. 1" = 10'

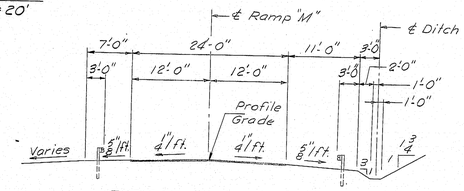

TYPICAL SECTION RAMP "M"
1" = 10'
(Looking North)

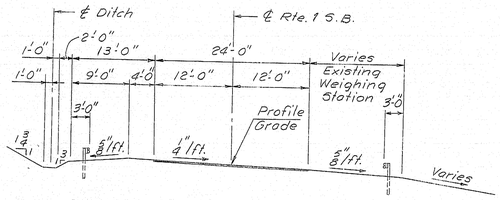

TYPICAL SECTION ROUTE 1 S.B.
1" = 10'
(Looking North)

SPECIFICATIONS

DESIGN
A.A.S.H.O. Standard Specifications for Highway Bridges 1965.

CONTRACT
State of Maine, State Highway Commission, Standard Specifications for Highways and Bridges, Revision of June 1968

LOADING
HS 20-44

FOUNDATIONS
Abut. No.1 - Spread Footings on ledge, @ 9 Tons / Sq. Ft.
Pier No.1 & No.2 - Spread Footings on ledge, @ 9 Tons / Sq. Ft.
Piers No. 3 - 10 BP57 Steel End Bearing Piles 63 Ton Capacity.
Abut. No.2 - 10 BP57 Steel End Bearing Piles 63 Ton Capacity.

ALLOWABLE STRESSES
Concrete (n=10) ~ fc = 1200 p.s.i.
Reinforcing Steel ~ fs = 20000 p.s.i.
Structural Steel, A.S.T.M. Designation A36, fs = 20,000 p.s.i.

CONCRETE CLASSIFICATION
All concrete shall be Class "A" except slope protection which shall be Class "Y".

BRIDGE QUANTITIES
Final Quantities

Item No.	Description		Quantity	Unit
203.26	Gravel Borrow		1214 ~~1450~~	C.Y.
206.08	Structural Earth Excavation - Abuts. & Ret. Walls		582 ~~555~~	C.Y.
206.09	Structural Rock Excavation - Abuts. & Ret. Walls		10.5 ~~16~~	C.Y.
206.10	Structural Earth Excavation - Piers		439 ~~370~~	C.Y.
206.11	Structural Rock Excavation - Piers		5.3 ~~16~~	C.Y.
403.09	Hot Bituminous Pavement - Grading C	Crushed Ledge 167.98	~~118~~	Ton
501.211	Steel H-beam Piles	57 lbs./ft.	1528 ~~1520~~	L.F.
502.21	Structural Concrete - Abuts. & Ret. Walls		557.0 ~~537~~	C.Y.
502.23	Structural Concrete - Piers		181.8 ~~165~~	C.Y.
502.261	Struct. Conc. - Rdwy. & Sdwk. Slabs on Steel Bridge (Ramp "J")		1	L.S.
502.311	Structural Concrete - Approach Slabs (Ramp "J")		1	L.S.
503.12	Reinforcing Steel - Fabricated & Delivered		153,558 ~~152,900~~	lbs.
503.13	Reinforcing Steel - Placing		153,558 ~~152,900~~	lbs.
504.701	Structural Steel - Fabricated & Delivered (Ramp "J")		1	L.S.
504.711	Structural Steel - Erection (Ramp "J")		1	L.S.
505.081	Shear Connectors (Ramp "J")		1	L.S.
506.141	Field Painting - Structural Steel (Ramp "J")		1	L.S.
507.08	Bridge Railing		655	L.F.
508.10	Membrane Waterproofing		994.0 ~~1000~~	S.Y.
512.06	French Drains		150 ~~85~~	C.Y.
513.08	Slope Protection - Portland Cement Concrete		134.50 ~~133~~	S.Y.
514.06	Curing Box for Concrete Cylinders		1	Ea.
515.20	Protective Coating for Concrete Surfaces		418 ~~500~~	S.Y.
609.13	Vertical Bridge Curb - Type 1		677.4 ~~675~~	L.F.
639.09	Field Office Type "B"		1	Ea.
403.14	Asphalt Cement, Hot Bituminous Surface Pavements		11.23 ~~8~~	Ton

Estimated Quantity of Structural Steel - 313,000 lbs.
Estimated Quantity of Shear Connectors : Studs = 3820 Pcs.
Estimated Quantity of Concrete, Item 502.261 = 272 C.Y.
Estimated Quantity of Concrete, Item 502.311 = 22 C.Y.
The weight of structural steel members is based on nominal sizes and does not include the weight of welds, nuts, bolts, washers or rivets.

INDEX OF SHEETS

1. GENERAL PLAN & QUANTITIES
2. FOUNDATION SURVEY
3. FOUNDATION SURVEY
4. FOOTING PLAN
5. ABUTMENT NO. 1
6. ABUTMENT NO. 2
7. WINGWALL ELEVATIONS & SECTIONS
8. PIERS NO. 1, 2 & 3
9. STRUCTURAL STEEL & BLOCKING
10. STRUCTURAL STEEL DETAILS
11. SUPERSTRUCTURE
12. SUPERSTRUCTURE DETAILS
13. SLOPE PROTECTION
14. REINFORCING STEEL
15. REINFORCING STEEL

STANDARD DETAIL SHEETS

BD101-70 BEARING PEDESTALS
BD103-64 BEAM SPLICES
BD104-66 DIAPHRAGMS, ARMORED JOINTS AND SHEAR CONNECTORS
BD105-64 EXPANSION DAM
BD106-69 ALUMINUM RAIL

Revised As Builts JC Aug. 20 30 Jan. 1980

DESIGN— DETAIL - R.D.F.
TRACE—
CHECK— R.E.F.
BRIDGE NO.
SURVEY—
PLOT—

STATE HIGHWAY COMMISSION
BRIDGE DIVISION
RAMP "J"
OVER
ROUTE 1 S.B. & RAMP "M"
IN THE TOWN OF
KITTERY
YORK COUNTY
GENERAL PLAN & QUANTITIES
SHEET 1 OF 15 AUGUSTA, MAINE JANUARY 1968

HOWARD, NEEDLES, TAMMEN & BERGENDOFF
CONSULTING ENGINEERS
NEW YORK BOSTON KANSAS CITY

183-1 KITTERY (5)

BRUNING 44-302

B.P.R. REG. NO.	STATE	PROJECT NUMBER	SHEET NO.	TOTAL SHEETS
1	MAINE	I-95-1(5)	43	199

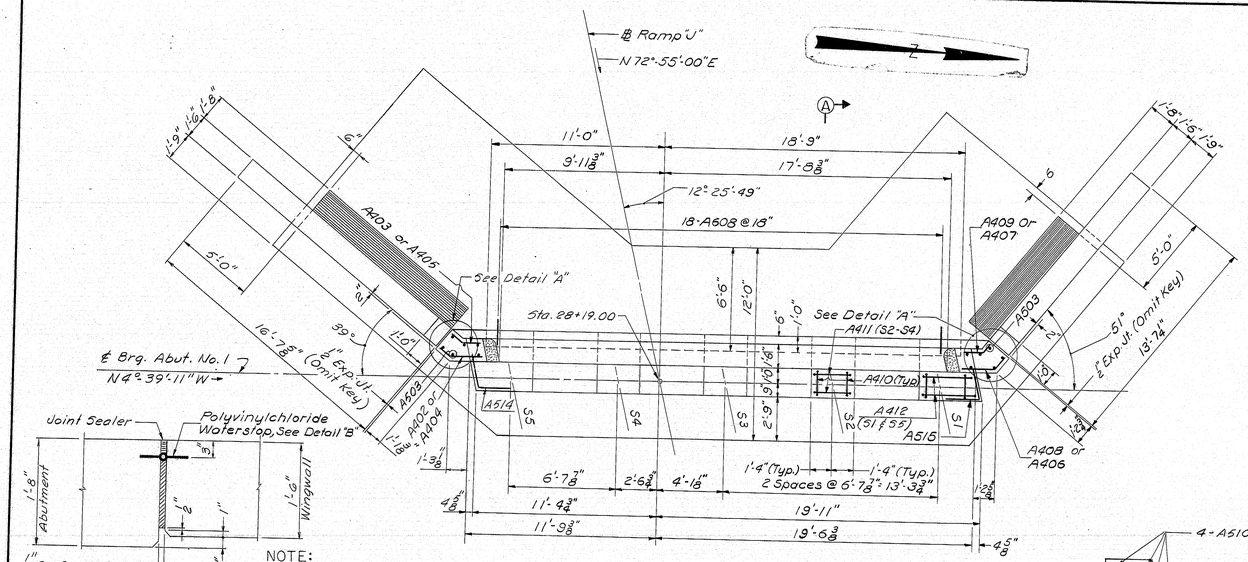

PLAN
1" = 1'-0"

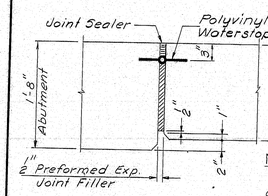

DETAIL "A"
1" = 1'-0"

NOTE:
1. Joint sealer shall conform to Federal Specification TT-C-598 and shall be gray Grade V compound.

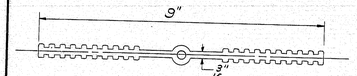

DETAIL "B"
½ Size

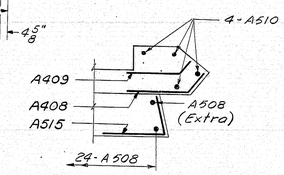

SECTION N-N
⅜" = 1'-0"

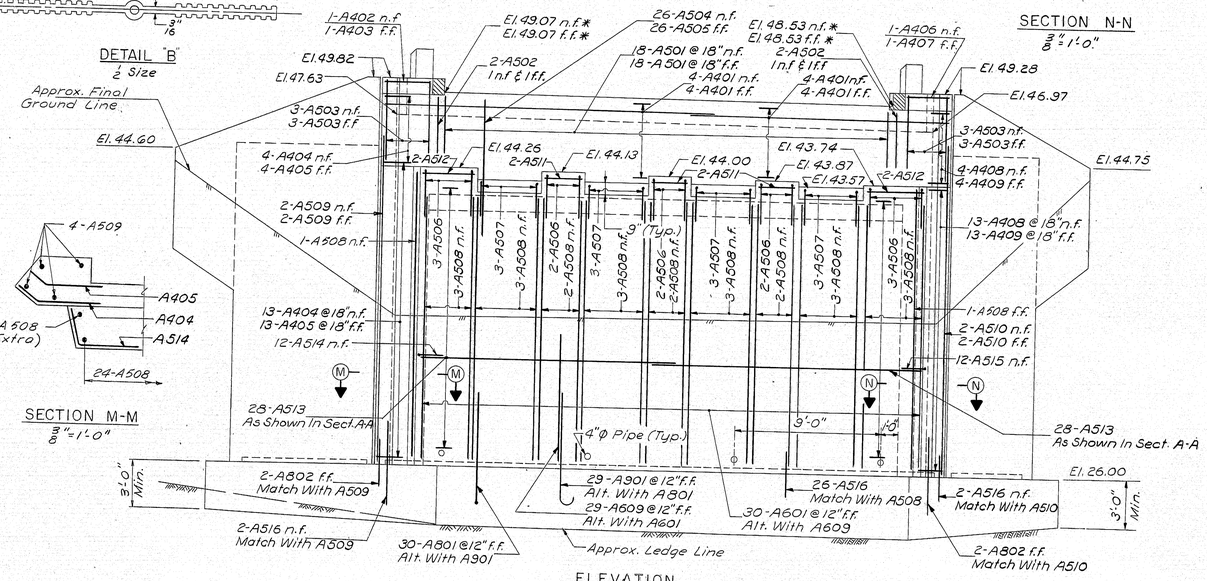

ELEVATION
¼" = 1'-0"

* Finished Grade Elevations

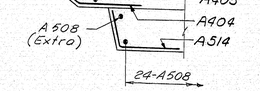

SECTION M-M
⅜" = 1'-0"

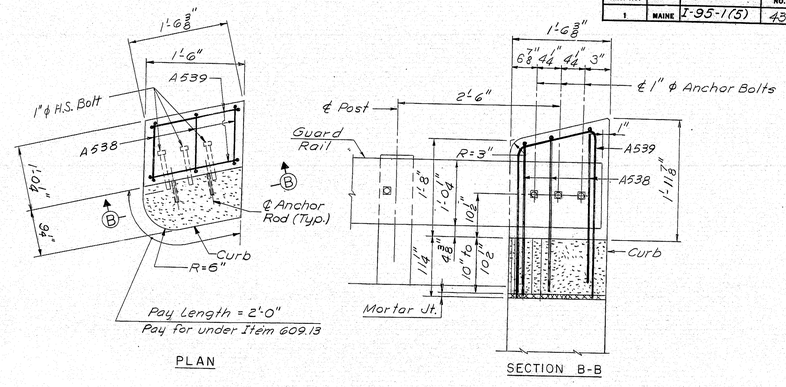

PLAN

SECTION B-B

END POST DETAIL
1" = 1'-0"

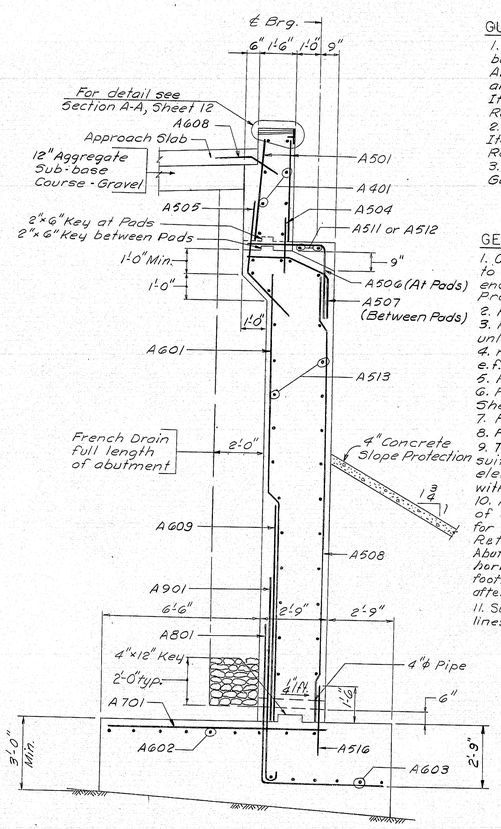

SECTION A-A
⅜" = 1'-0"

GUARD RAIL NOTES:

1. Three anchor bolts required to each end post, bolts to be furnished with hex head, nut and washer. All parts to be galvanized. Payment for acquiring and installing anchor bolts shall be incidental to Item 502.21 (Structural Concrete Abutments and Retaining Walls).
2. Concrete in Guard Rail End Post shall be paid for under Item 502.21 (Structural Concrete Abutments and Retaining Walls.)
3. For detail of Guard Rail Anchorage see Standard Details Guard Rail August 1969 Ⓑ

GENERAL NOTES:

1. Coat bridge seat, face of backwall and down to 1'-0" below top of slope protection on face and ends of breast wall and all faces of end posts with Protective Coating for Concrete Surfaces.
2. Place reinforcing to clear anchor bolts.
3. Reinforcing steel to have 2" minimum cover, unless otherwise noted.
4. n.f. denotes near face, f.f. denotes far face and e.f. denotes each face.
5. For footing plan see Sheet 4.
6. For wingwall elevation and sections, see Sheet 7.
7. For approach slab details, see Sheet 7.
8. For Const. & Contract. Joint Details, see Sheet 4.
9. Top of footing elevation may be altered to suit field conditions. No change in top of footing elevations greater than 2 feet shall be made without approval of the engineer.
10. Abutment footing shall have a minimum depth of 3'-0" below top of footing elevations. No payment for Structural Rock Excavation, Abutments and Retaining Walls, or for Structural Concrete, Abutments and Retaining Walls, will be made below horizontal planes located 1'-0" below bottom of footing elevations as determind by the Engineer after rock is exposed.
11. Surfaces of wingwalls down to 1'-0" below the embankment lines shall have a rubbed finish.

DESIGN– I.S. DETAIL– J.M.M.
TRACE–
CHECK– R.E.F.
BRIDGE NO.
SURVEY–
PLOT–

STATE HIGHWAY COMMISSION
BRIDGE DIVISION

RAMP "J"
OVER
ROUTE 1 S.B. & RAMP "M"
IN THE TOWN OF
KITTERY
YORK COUNTY
ABUTMENT NO. 1

HOWARD, NEEDLES, TAMMEN & BERGENDOFF
CONSULTING ENGINEERS
NEW YORK BOSTON KANSAS CITY

SHEET 5 OF 15 AUGUSTA, MAINE

183-5 KITTERY (5)

BRUNING 44-302

B.P.R. REG. NO.	STATE	PROJECT NUMBER	SHEET NO.	TOTAL SHEETS
1	MAINE	I-95-1(5)	44	199

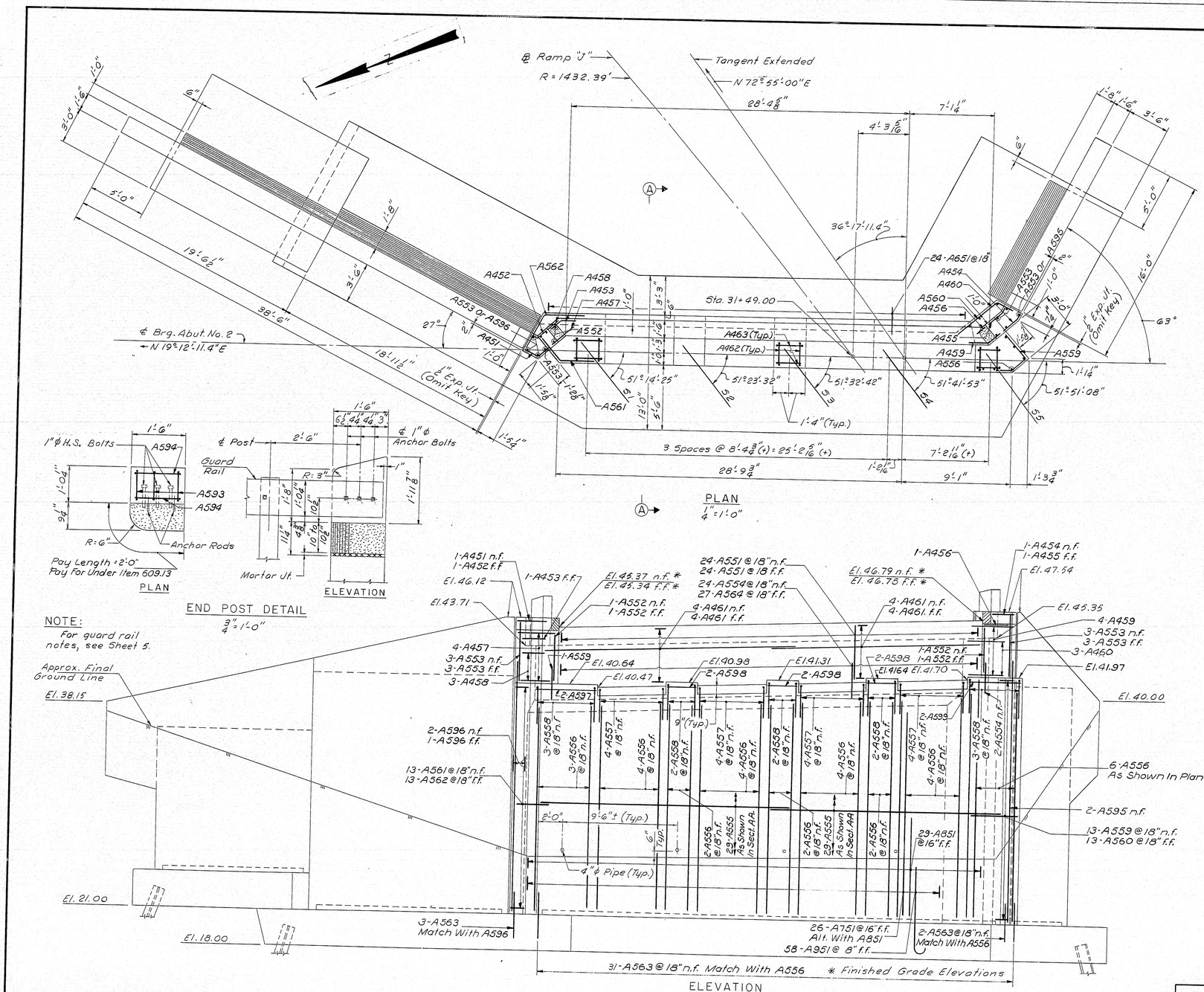

PLAN
1" = 1'-0"

END POST DETAIL
3/4" = 1'-0"

NOTE:
For guard rail notes, see Sheet 5.

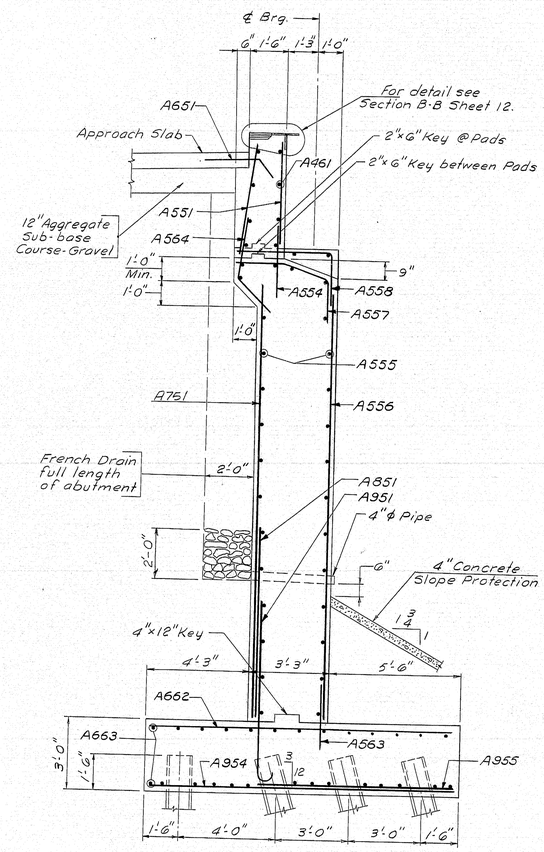

SECTION A-A
3/8" = 1'-0"

NOTES:
1. For General Notes, see Sheet 5.
2. For Footing Plan, see Sheet 4.
3. For Wingwall Elevations and details, see Sheet 7.
4. For Approach Slab details, see Sheet 7.

ELEVATION
1/4" = 1'-0"

DESIGN- I.S. DETAIL- J.M.M. BRIDGE NO.
TRACE- SURVEY-
CHECK- R.E.F. PLOT-

STATE HIGHWAY COMMISSION
BRIDGE DIVISION

RAMP "J"
OVER
ROUTE 1 SB & RAMP "M"
IN THE TOWN OF
KITTERY
YORK COUNTY
ABUTMENT NO. 2

HOWARD, NEEDLES, TAMMEN & BERGENDOFF
CONSULTING ENGINEERS
NEW YORK BOSTON KANSAS CITY

SHEET 6 OF 15 AUGUSTA, MAINE

183-6 KITTERY (5)

BRUNING 44-302

B. P. R. REG. NO.	STATE	PROJECT NUMBER	SHEET NO.	TOTAL SHEETS
1	MAINE	I-95-1(5)	45	199

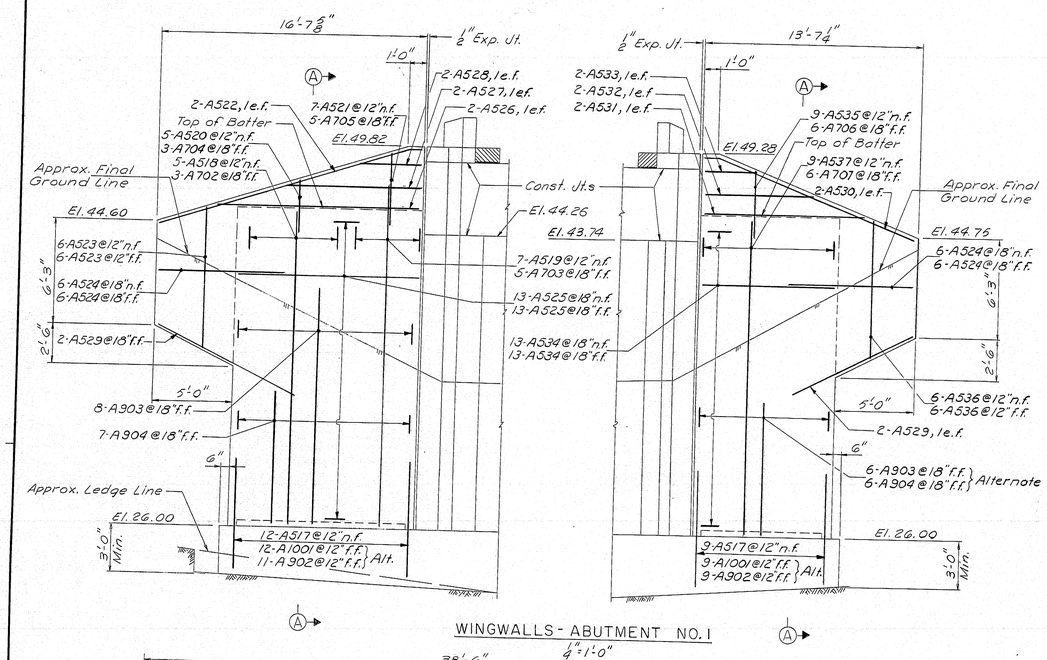

WINGWALLS - ABUTMENT NO. 1
1" = 1'-0"

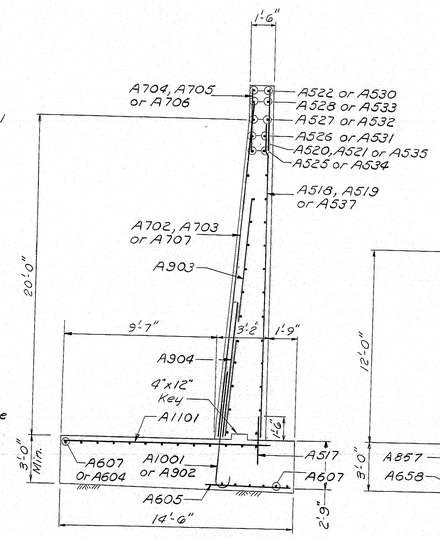

SECTION A-A
1" = 1'-0"

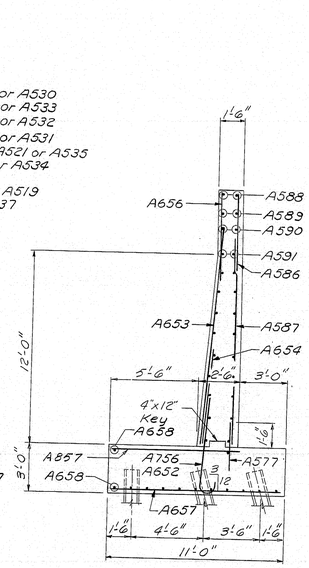

SECTION B-B
1" = 1'-0"

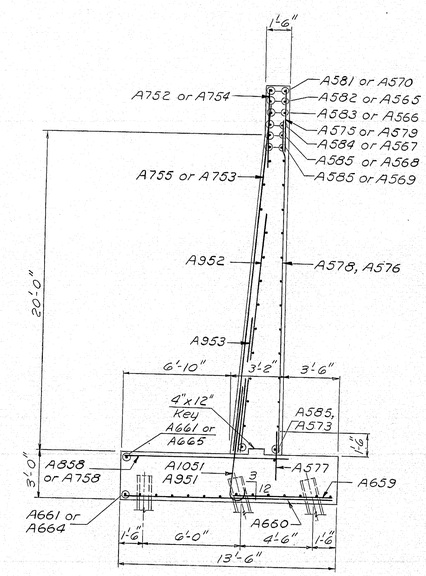

SECTION C-C
1" = 1'-0"

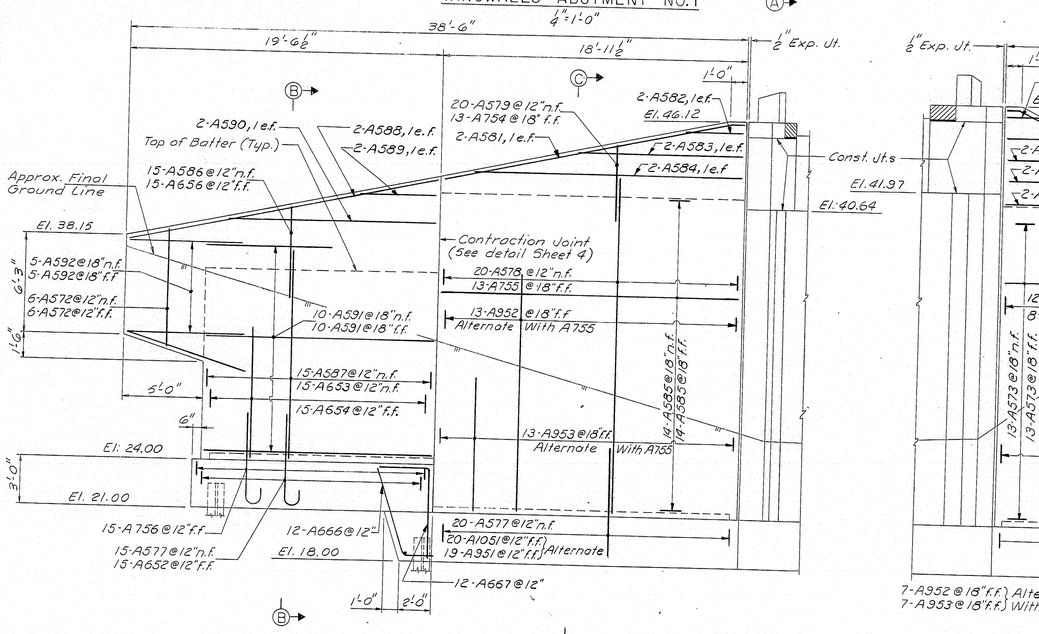

WINGWALLS - ABUTMENT NO. 2
1" = 1'-0"

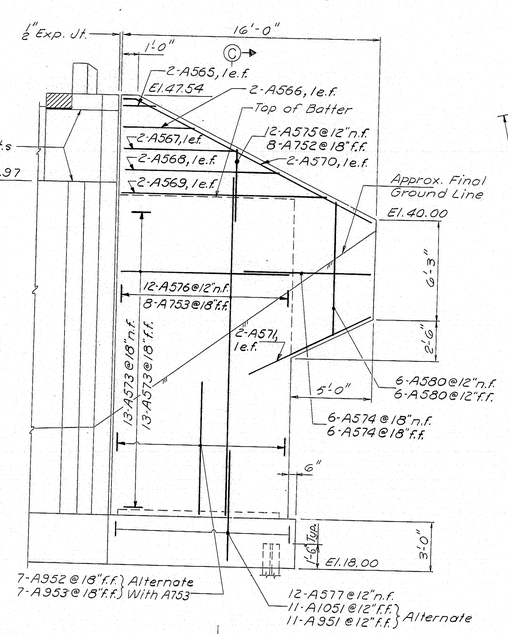

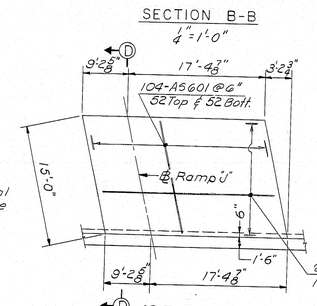

ABUTMENT NO. 1

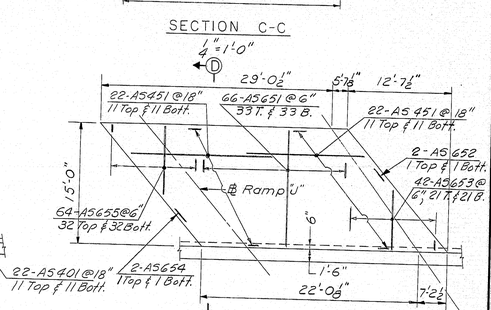

ABUTMENT NO. 2
Tangent Extended

PLAN - APPROACH SLAB

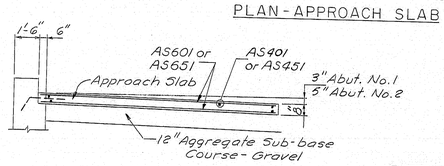

SECTION D-D
1" = 1'-0"

NOTE:
For General Notes see Sheet No. 5.

DESIGN- I.S. DETAIL- J.M.M.
TRACE-
CHECK- R.E.F.
BRIDGE NO.
SURVEY-
PLOT-

STATE HIGHWAY COMMISSION
BRIDGE DIVISION
RAMP "J"
OVER
ROUTE 1 S.B. & RAMP "M"
IN THE TOWN OF
KITTERY
YORK COUNTY
WINGWALL ELEVATIONS & SECTIONS
SHEET 7 OF 15 AUGUSTA, MAINE

HOWARD, NEEDLES, TAMMEN & BERGENDOFF
CONSULTING ENGINEERS
NEW YORK BOSTON KANSAS CITY

183-7 KITTERY (5)

BRUNING 44-302

U. P. R. REG. NO.	STATE	PROJECT NUMBER	SHEET NO.	TOTAL SHEETS
1	MAINE	I-95-1(5)	46	199

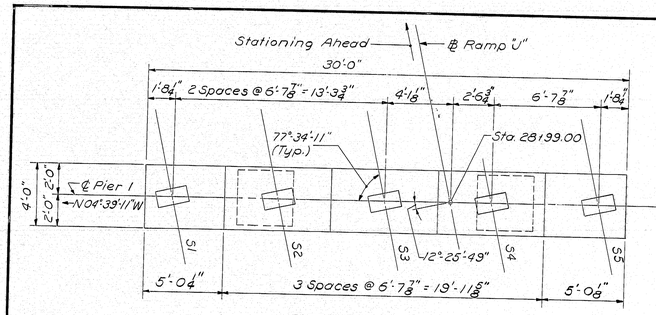

PIER NO. 1-PLAN
1/4" = 1'-0"

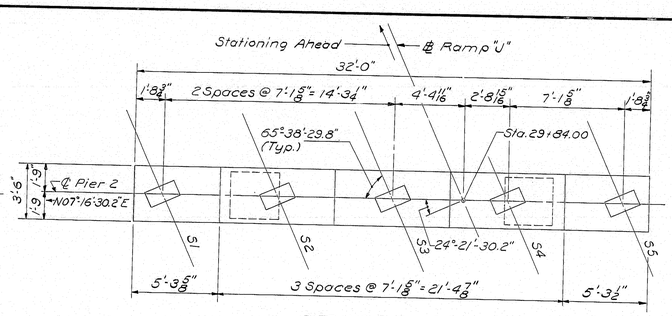

PIER NO. 2-PLAN
1/4" = 1'-0"

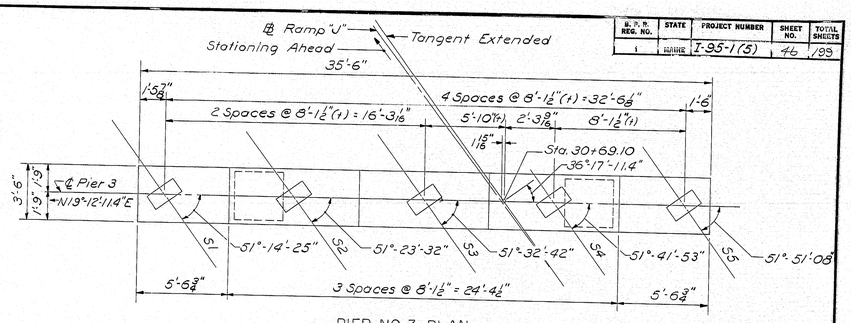

PIER NO. 3-PLAN
1/4" = 1'-0"

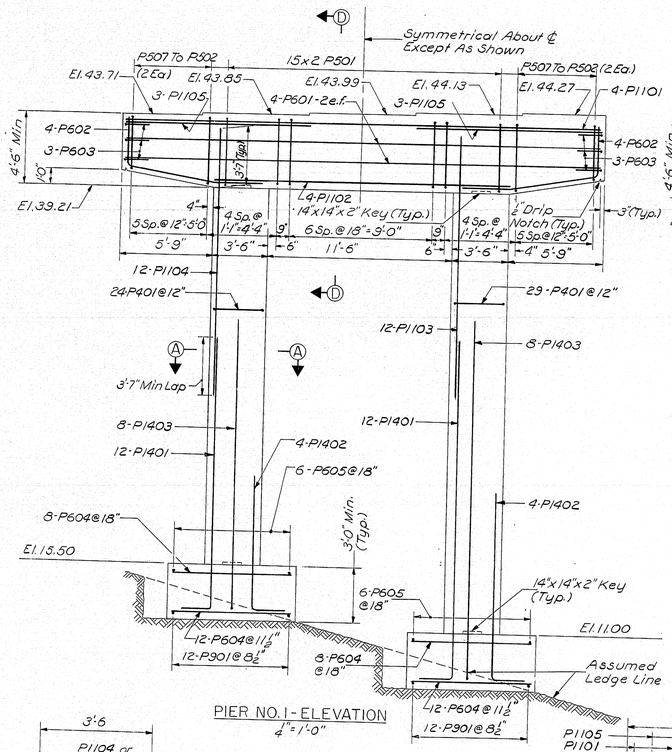

PIER NO. 1-ELEVATION
1/4" = 1'-0"

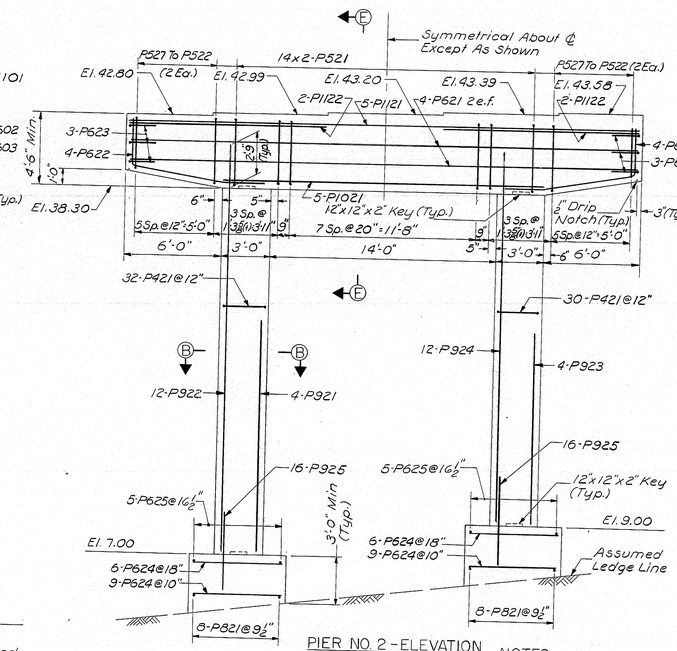

PIER NO. 2-ELEVATION
1/4" = 1'-0"

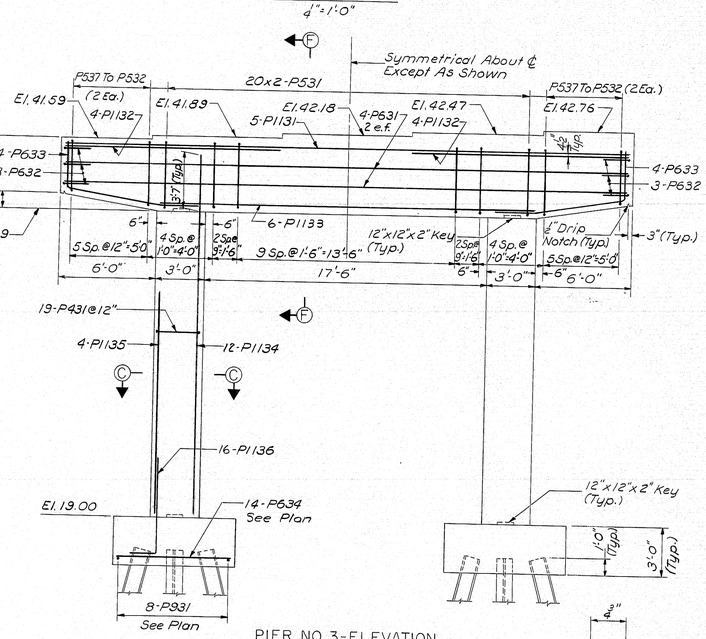

PIER NO. 3-ELEVATION
1/4" = 1'-0"

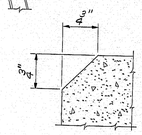

CHAMFER DETAIL
No Scale

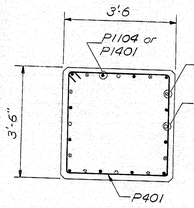

SECTION A-A
1/2" = 1'-0"

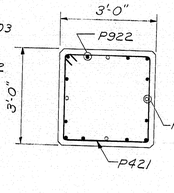

SECTION B-B
1/2" = 1'-0"

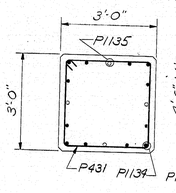

SECTION C-C
1/2" = 1'-0"

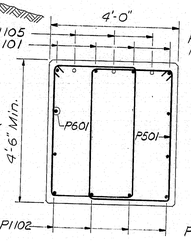

SECTION D-D
1/2" = 1'-0"

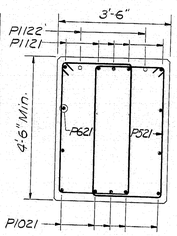

SECTION E-E
1/2" = 1'-0"

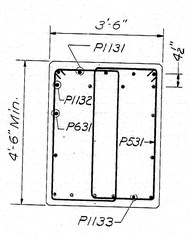

SECTION F-F
1/2" = 1'-0"

NOTES:

1. Dress bearing pad area 1" larger all around than masonry plates to exact elevations shown.
2. Reinforcing steel to have 2" minimum cover except as noted.
3. Place reinforcing to clear anchor bolts.
4. All exposed corners to have ¾" chamfer, see detail this Sheet.
5. Maximum Footing Pressure:
   Group I 5.1 Tons/Sq. Ft.
   Group VI 7.7 Tons/Sq. Ft.
6. All weathered or broken ledge shall be removed before any footing concrete is placed.
7. Top of footing elevation may be altered to suit field conditions. No change in top of footing elevations greater than 2 feet shall be made without approval of the Engineer. Top of footing shall have a minimum of one foot of earth cover.
8. Footing side forms may be omitted in rock provided rock is excavated outside the plan dimensions and if approved by the Engineer. Payment for Structural Concrete-Piers will be made according to plan dimensions of footing.
9. Pier footings shall have a minimum depth of 3'-0" below the top of footing elevations. No payment for Structural Rock Excavation, Abutments and Retaining Walls, or for Structural Concrete, Abutments and Retaining Walls, will be made below horizontal planes located 1'-0" below bottom of footing elevations as determined by the Engineer after rock is exposed.
10. For footing plans and pile notes, see Sheet 4.
11. Pier surfaces, except bridge seats down to 1'-0" below final ground line shall have a rubbed finish.

HOWARD, NEEDLES, TAMMEN & BERGENDOFF
CONSULTING ENGINEERS
NEW YORK BOSTON KANSAS CITY

DESIGN- I. S.	DETAIL- R.D.F.	BRIDGE NO.
TRACE-		SURVEY-
CHECK- R.E.F.		PLOT-

STATE HIGHWAY COMMISSION
BRIDGE DIVISION
RAMP "J"
OVER
ROUTE 1 S.B. & RAMP "M"
IN THE TOWN OF
KITTERY
YORK COUNTY
PIERS NO. 1, 2 & 3
SHEET 8 OF 15 AUGUSTA, MAINE

183-8 KITTERY (5)

BRUNING 44-302

N. P. P. REG. NO.	STATE	PROJECT NUMBER	SHEET NO.	TOTAL SHEETS
1	MAINE	I-95-1(5)	47	199

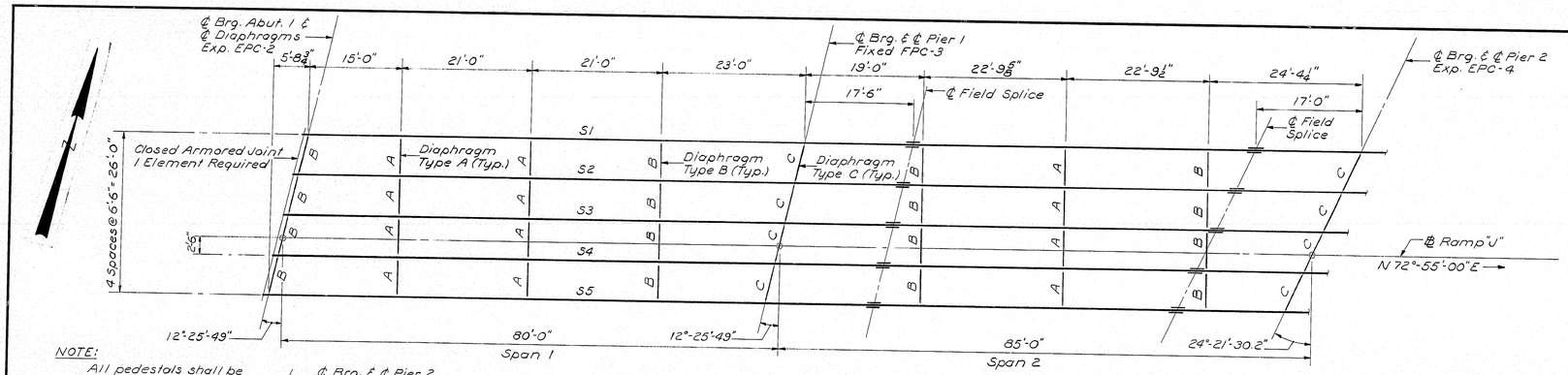

NOTE:

All pedestals shall be installed perpendicular to ℄ of stringer.

⊥ Indicates 90° angle between stringer and diaphragm.

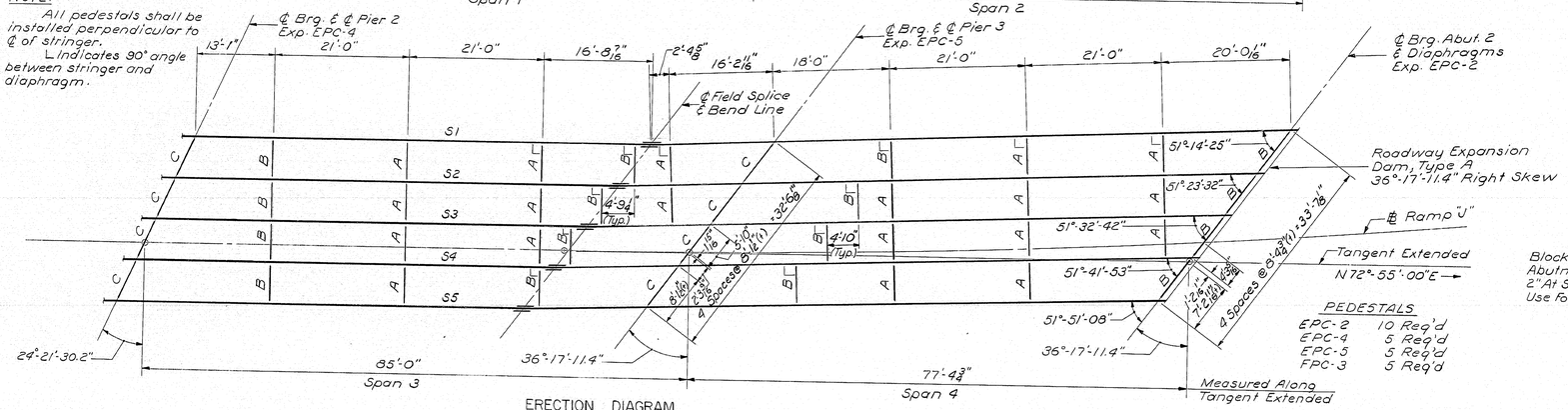

ERECTION DIAGRAM

1" = 10'

PEDESTALS

EPC-2	10 Req'd
EPC-4	5 Req'd
EPC-5	5 Req'd
FPC-3	5 Req'd

REFERENCES

Splices: See Standard Details Sheet BD103-64.
Pedestals: See Standard Details Sheet BD101-70
Expansion Dams: See Standard Details Sheet BD105-64, and Sheet 12.
Armored Joint, Shear Connector and Diaphragms: See Standard Details Sheet BD104-66 and Sheet 10
For additional steel details, see Sheet 10

SPECIFICATIONS

Fabrication and Erection: State of Maine Standard Specifications, Highways and Bridges, Revision of June 1968
Design and Detail: A.A.S.H.O. Standard Specifications for Highway Bridges of 1965.
Material: Except as otherwise noted on the Standard Details, all material shall conform to A.S.T.M. designation A36.

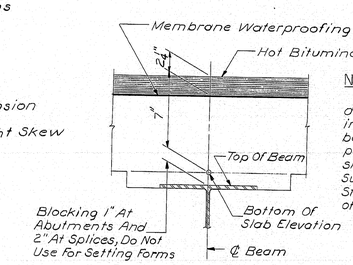

BLOCKING DETAIL

No Scale

NOTE

To compensate for dead load deflections, as well as possible irregularities in beams, set the bottom of slab elevations at the points indicated before any of the slab formwork is started. See Sub-Section 502.10 (a) of the Standard Specifications, Revision of June, 1968

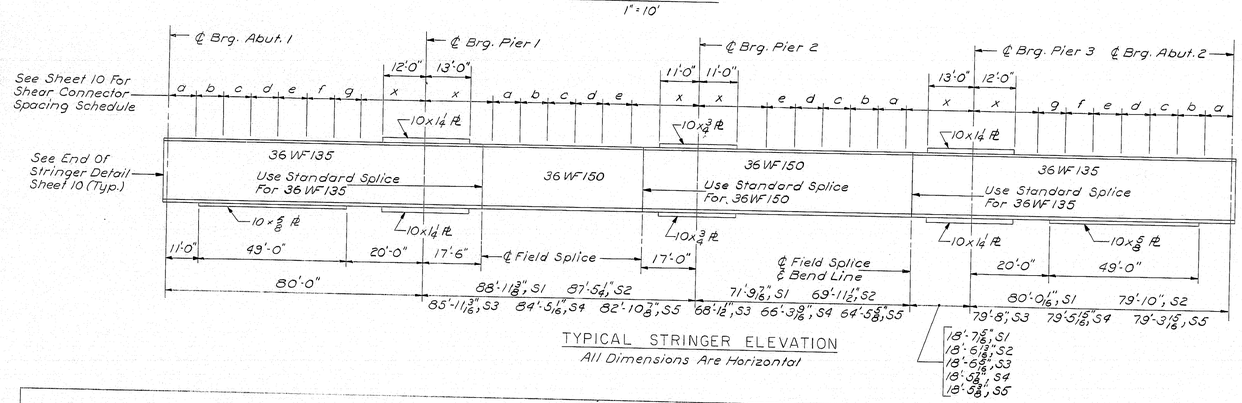

TYPICAL STRINGER ELEVATION

All Dimensions Are Horizontal

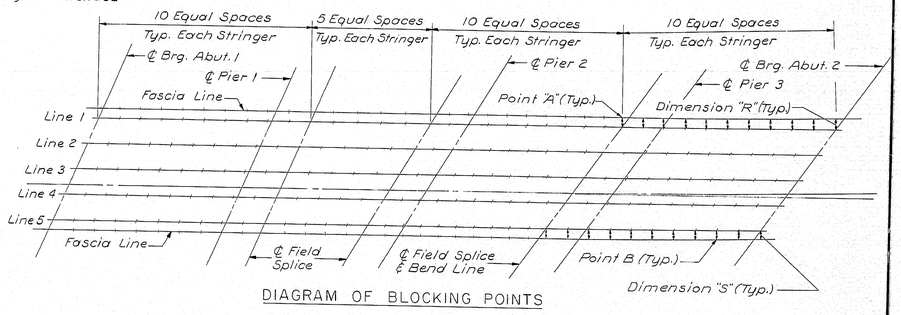

DIAGRAM OF BLOCKING POINTS

TABLE FOR DIMENSIONS "R" & "S"

	℄ Splice & Bend Line	SPAN 4									℄ Brg. Abut. 2
		0.1L	0.2L	0.3L	0.4L	0.5L	0.6L	0.7L	0.8L	0.9L	
"R"	2'-4 3/8"	2'-0 3/8"	1'-10"	1'-8 1/8"	1'-7/8"	1'-6 1/8"	1'-7 3/8"	1'-8 3/8"	1'-11 1/8"	2'-2 1/8"	2'-6"
"S"	2'-3 1/2"	2'-7/8"	2'-10 1/4"	3'-0 1/4"	3'-2	3'-2 3/8"	3'-2 1/2"	3'-1 7/8"	2'-11 1/8"	2'-9 3/8"	2'-6"

BOTTOM OF SLAB ELEVATION AT BLOCKING POINTS

	℄ Brg. Abut. 1	0.1L	0.2L	0.3L	0.4L	0.5L	0.6L	0.7L	0.8L	0.9L	℄ Splice	0.2L	0.4L	0.6L	0.8L	℄ Splice
Point A	47.70	47.78	47.83	47.87	47.88	47.87	47.83	47.79	47.75	47.73	47.71	47.68	47.64	47.57	47.47	47.36
Line 1	47.78	47.85	47.91	47.94	47.95	47.94	47.91	47.86	47.83	47.80	47.78	47.76	47.71	47.64	47.55	47.44
Line 2	47.91	47.98	48.04	48.08	48.09	48.07	48.04	48.00	47.96	47.94	47.93	47.91	47.87	47.81	47.72	47.62
Line 3	48.04	48.11	48.17	48.21	48.22	48.21	48.18	48.14	48.10	48.08	48.07	48.05	48.02	47.97	47.89	47.81
Line 4	48.17	48.24	48.30	48.34	48.35	48.34	48.31	48.27	48.24	48.22	48.21	48.20	48.17	48.13	48.06	47.98
Line 5	48.30	48.38	48.43	48.47	48.49	47.48	48.45	48.41	48.38	48.36	48.35	48.34	48.32	48.28	48.23	48.15
Point B	48.33	48.41	48.47	48.51	48.52	48.51	48.48	48.44	48.41	48.39	48.38	48.37	48.35	48.31	48.26	48.19

	0.1L	0.2L	0.3L	0.4L	0.5L	0.6L	0.7L	0.8L	0.9L	℄ Splice & Bend Line	0.1L	0.2L	0.3L	0.4L	0.5L	0.6L	0.7L	0.8L	0.9L	℄ Brg. Abut. 2
Point A	47.26	47.16	47.07	46.98	46.89	46.79	46.68	46.52	46.43	46.28	46.12	45.97	45.84	45.72	45.58	45.43	45.28	45.05	44.83	44.58
Line 1	47.34	47.24	47.15	47.06	46.97	46.87	46.76	46.64	46.51	46.36	46.19	46.04	45.90	45.77	45.64	45.49	45.31	45.12	44.91	44.67
Line 2	47.53	47.45	47.37	47.29	47.22	47.13	47.03	46.91	46.79	46.65	46.49	46.34	46.21	46.08	45.95	45.81	45.64	45.45	45.24	45.01
Line 3	47.72	47.65	47.58	47.52	47.45	47.37	47.29	47.18	47.07	46.94	46.78	46.66	46.51	46.39	46.27	46.12	45.96	45.77	45.57	45.35
Line 4	47.91	47.85	47.79	47.74	47.68	47.61	47.54	47.44	47.34	47.22	47.07	46.93	46.81	46.70	46.58	46.44	46.28	46.10	45.90	45.68
Line 5	48.09	48.04	47.99	47.95	47.90	47.85	47.78	47.70	47.60	47.49	47.36	47.23	47.11	47.00	46.89	46.76	46.60	46.42	46.22	46.01
Point B	48.12	48.07	48.02	47.98	47.94	47.88	47.82	47.73	47.64	47.53	47.40	47.28	47.18	47.07	46.96	46.82	46.67	46.48	46.28	46.06

DESIGN– I.S. DETAIL – R.D.F.
TRACE– CHECK– R.E.F.
BRIDGE NO.
SURVEY–
PLOT–

STATE HIGHWAY COMMISSION
BRIDGE DIVISION

RAMP "J"
OVER
ROUTE 1 S.B. & RAMP "M"
IN THE TOWN OF
KITTERY
YORK COUNTY
STRUCTURAL STEEL & BLOCKING

HOWARD, NEEDLES, TAMMEN & BERGENDOFF
CONSULTING ENGINEERS
NEW YORK BOSTON KANSAS CITY

SHEET 9 OF 15 AUGUSTA, MAINE

183-9 KITTERY (5)

BRUNING 44-302

U. P. R. REG. NO.	STATE	PROJECT NUMBER	SHEET NO.	TOTAL SHEETS
1	MAINE	I-95-1(5)	47	199

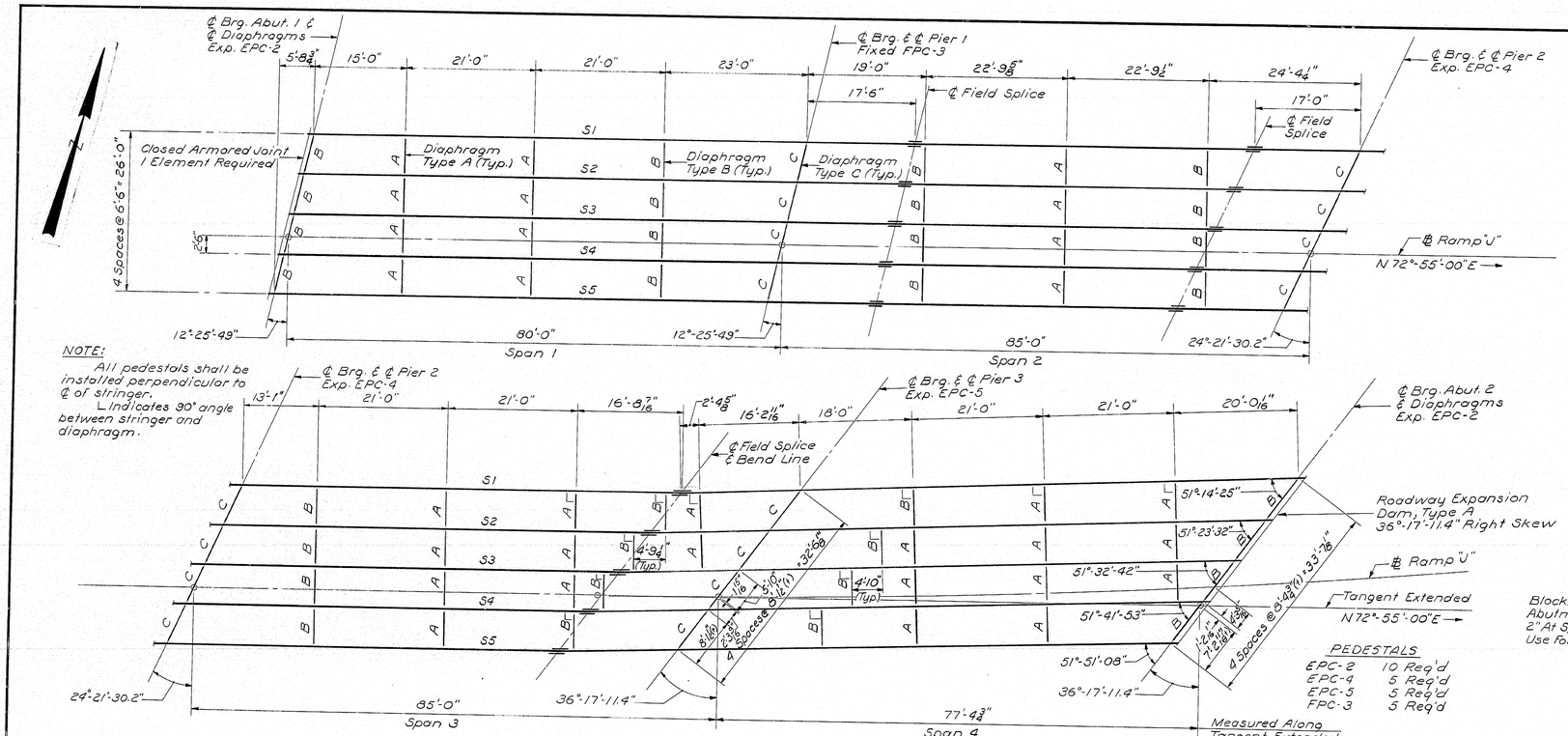

NOTE:
All pedestals shall be installed perpendicular to ℄ of stringer.
⊥ indicates 90° angle between stringer and diaphragm.

ERECTION DIAGRAM
1" = 10'

REFERENCES

Splices: See Standard Details Sheet BD103-64.
Pedestals: See Standard Details Sheet BD101-70
Expansion Dams: See Standard Details Sheet BD105-64, and Sheet 12.
Armored Joint, Shear Connector and Diaphragms: See Standard Details Sheet BD104-66 and Sheet 10
For additional steel details, see Sheet 10

SPECIFICATIONS

Fabrication and Erection: State of Maine Standard Specifications, Highways and Bridges, Revision of June 1968
Design and Detail: A.A.S.H.O. Standard Specifications for Highway Bridges of 1965.
Material: Except as otherwise noted on the Standard Details, all material shall conform to A.S.T.M. designation A 36.

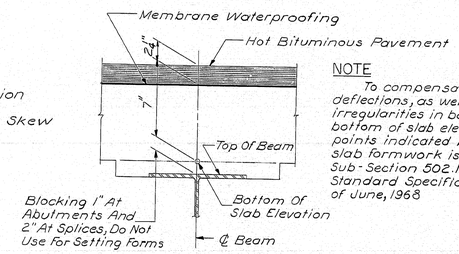

BLOCKING DETAIL
No Scale

NOTE
To compensate for dead load deflections, as well as possible irregularities in beams, set the bottom of slab elevations at the points indicated before any of the slab formwork is started. See Sub-Section 502.10 (a) of the Standard Specifications, Revision of June, 1968

PEDESTALS

EPC-2	10 Req'd
EPC-4	5 Req'd
EPC-5	5 Req'd
FPC-3	5 Req'd

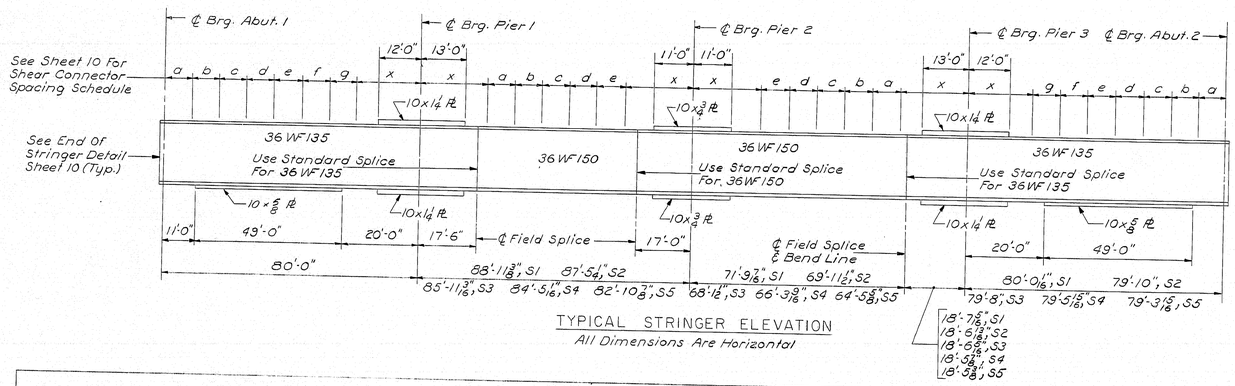

TYPICAL STRINGER ELEVATION
All Dimensions Are Horizontal

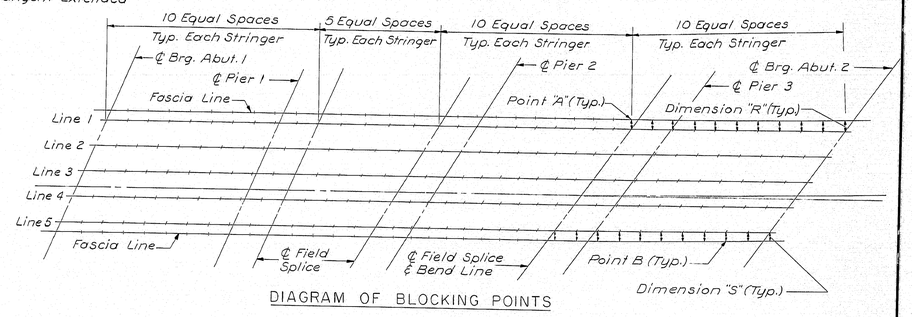

DIAGRAM OF BLOCKING POINTS

TABLE FOR DIMENSIONS "R" & "S"

	℄ Splice & Bend Line	SPAN 4									℄ Brg. Abut 2
		0.1L	0.2L	0.3L	0.4L	0.5L	0.6L	0.7L	0.8L	0.9L	
"R"	2'-4 3/8"	2'-0 3/8"	1'-10"	1'-8 1/8"	1'-7 1/16"	1'-6 3/8"	1'-7 3/8"	1'-8 7/8"	1'-11 1/8"	2'-2 1/8"	2'-6"
"S"	2'-3 1/2"	2'-7 1/4"	2'-10 1/4"	3'-0 1/2"	3'-2	3'-2 5/8"	3'-2 1/2"	3'-1 3/8"	2'-11 1/8"	2'-9 3/8"	2'-6"

BOTTOM OF SLAB ELEVATION AT BLOCKING POINTS

	℄ Brg. Abut 1	0.1L	0.2L	0.3L	0.4L	0.5L	0.6L	0.7L	0.8L	0.9L	℄ Splice	0.2L	0.4L	0.6L	0.8L	℄ Splice	0.1L	0.2L	0.3L	0.4L	0.5L	0.6L	0.7L	0.8L	0.9L	℄ Splice & Bend Line	0.1L	0.2L	0.3L	0.4L	0.5L	0.6L	0.7L	0.8L	0.9L	℄ Brg. Abut 2
Point A	47.70	47.78	47.83	47.87	47.88	47.87	47.83	47.79	47.75	47.73	47.71	47.68	47.64	47.57	47.47	47.36	47.26	47.16	47.07	46.98	46.89	46.79	46.68	46.56	46.43	46.28	46.12	45.97	45.84	45.72	45.58	45.43	45.25	45.05	44.83	44.58
Line 1	47.78	47.85	47.91	47.94	47.95	47.94	47.91	47.86	47.83	47.80	47.78	47.76	47.71	47.64	47.55	47.44	47.34	47.24	47.15	47.06	46.97	46.87	46.76	46.64	46.51	46.36	46.19	46.04	45.90	45.77	45.64	45.49	45.31	45.12	44.91	44.67
Line 2	47.91	47.98	48.04	48.08	48.09	48.07	48.04	48.00	47.96	47.94	47.93	47.91	47.87	47.81	47.72	47.62	47.53	47.45	47.37	47.29	47.22	47.13	47.03	46.91	46.79	46.65	46.49	46.34	46.21	46.08	45.95	45.81	45.66	45.45	45.24	45.01
Line 3	48.04	48.11	48.17	48.21	48.22	48.21	48.18	48.14	48.10	48.08	48.07	48.05	48.02	47.97	47.89	47.81	47.72	47.65	47.58	47.52	47.45	47.37	47.29	47.18	47.07	46.94	46.78	46.64	46.51	46.39	46.27	46.12	45.96	45.77	45.57	45.35
Line 4	48.17	48.24	48.30	48.34	48.35	48.34	48.31	48.27	48.24	48.22	48.21	48.20	48.17	48.13	48.06	47.98	47.91	47.85	47.79	47.74	47.68	47.61	47.54	47.44	47.34	47.22	47.07	46.93	46.81	46.70	46.58	46.44	46.28	46.10	45.90	45.68
Line 5	48.30	48.38	48.43	48.47	48.49	47.48	48.45	48.41	48.38	48.36	48.35	48.34	48.32	48.28	48.23	48.15	48.09	48.04	47.99	47.95	47.90	47.85	47.78	47.70	47.60	47.49	47.36	47.23	47.11	47.00	46.89	46.79	46.60	46.42	46.22	46.01
Point B	48.33	48.41	48.47	48.51	48.52	48.51	48.48	48.44	48.41	48.39	48.38	48.37	48.35	48.31	48.26	48.19	48.12	48.07	48.02	47.98	47.94	47.88	47.82	47.73	47.64	47.53	47.40	47.28	47.18	47.07	46.96	46.88	46.67	46.48	46.28	46.06

DESIGN- T.S. DETAIL - R.D.F. BRIDGE NO.
TRACE- SURVEY-
CHECK- R.E.F. PLOT-

STATE HIGHWAY COMMISSION
BRIDGE DIVISION

RAMP "J"
OVER
ROUTE 1 S.B. & RAMP "M"
IN THE TOWN OF
KITTERY
YORK COUNTY
STRUCTURAL STEEL & BLOCKING

SHEET 9 OF 15 AUGUSTA, MAINE

HOWARD, NEEDLES, TAMMEN & BERGENDOFF
CONSULTING ENGINEERS
NEW YORK BOSTON KANSAS CITY

183-9 KITTERY (5)

BRUNING 44-302

B. P. R. REG. NO.	STATE	PROJECT NUMBER	SHEET NO.	TOTAL SHEETS
1	MAINE	I-95-1(5)	48	199

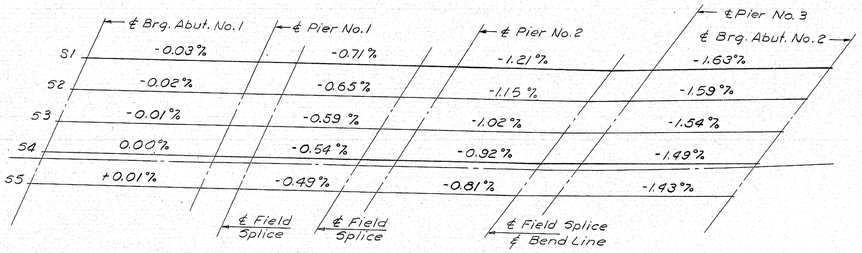

BEAM GRADES

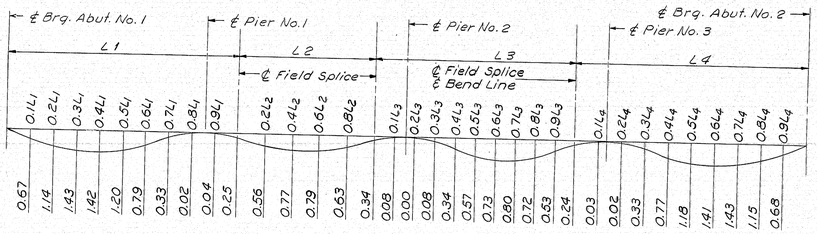

DEAD LOAD DEFLECTION DIAGRAM

ALL DEFLECTIONS IN INCHES

No Shop Camber Required. Natural Mill Camber To Be Placed Up.

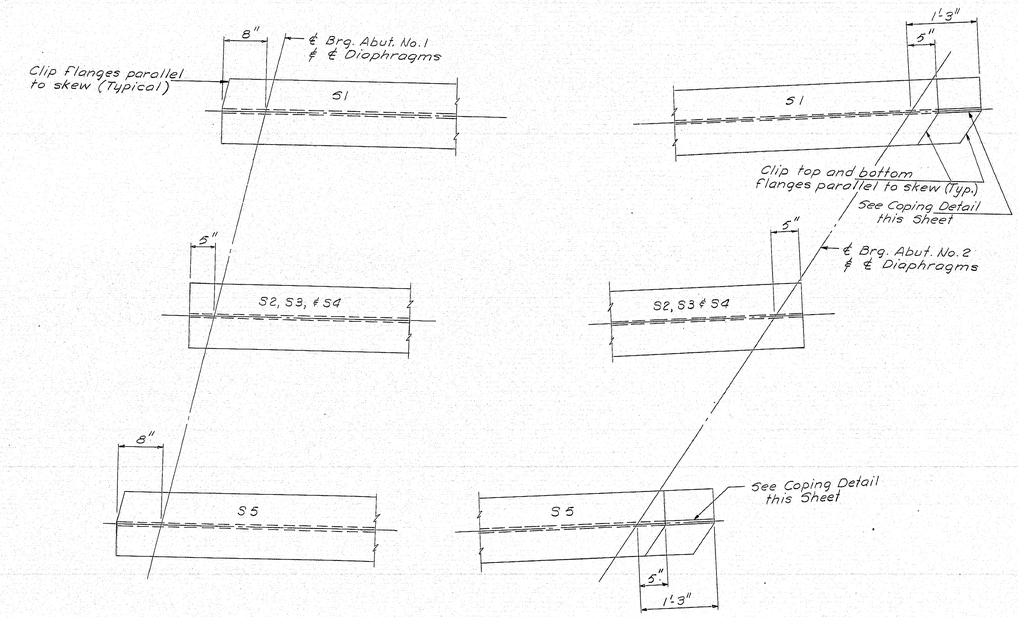

END OF STRINGER DETAILS

1" = 1'-0"

SHEAR CONNECTOR SPACING SCHEDULE

(Typical for all Stringers)

SPAN 1 & SPAN 4	
Loc.	2 Studs 5" x 7/8" ϕ
a	20@5" = 8'-4"
b	16@6" = 8'-0"
c	14@7" = 8'-2"
d	19@10" = 15'-10"
e	13@7" = 7'-7"
f	16@6" = 8'-0"
g	10@5" = 4'-2"

SPAN 2 & SPAN 3	
Loc.	
a	14@6" = 7'-0"
b	15@7" = 8'-9"
c	23@9" = 17'-3"
d	15@7" = 8'-9"
e	14@6" = 7'-0"

DIMENSION "X"

SPAN NO. 1	S1 thru S5	19'-11"	
SPAN NO. 2	S1	~~11'-6 1/4"~~	20'-1 3/16"
	S2	~~10'-7 1/4"~~	19'-9 7/8"
	S3	~~9'-8 1/4"~~	18'-7 11/16"
	S4	~~8'-9 1/4"~~	17'-10 3/16"
	S5	~~7'-10 1/4"~~	17'-0 9/16"
SPAN NO.3	S1	20'-9 3/8"	
	S2	19'-10 5/8"	
	S3	18'-11 3/8"	
	S4	18'-0 1/4"	
	S5	17'-1"	
SPAN NO.4	S1	19'-1"	
	S2	19'-9"	
	S3	19'-7"	
	S4	19'-5"	
	S5	19'-3"	

1

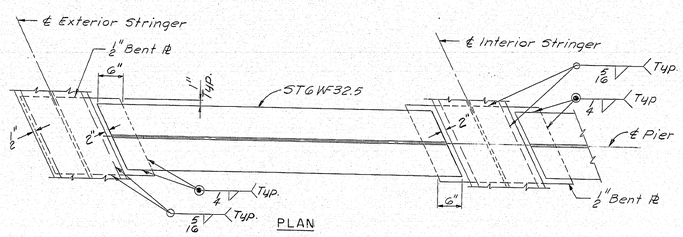

PLAN

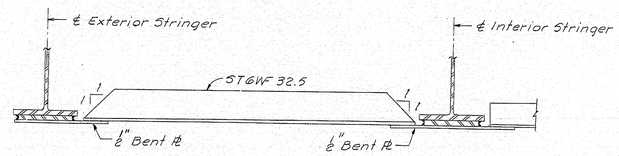

ELEVATION

DIAPHRAGM C

1" = 1'-0"

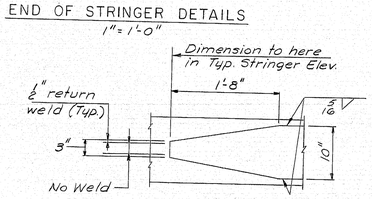

COVER PLATE DETAIL

1" = 1'-0"

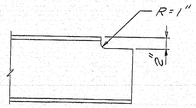

COPING DETAIL S1 & S5

No Scale

(Abutment 2 Only)

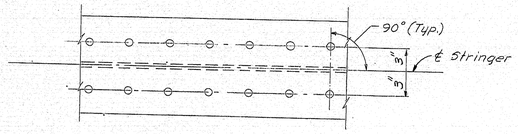

SHEAR CONNECTORS

No Scale

1	Revised Dimension "X" Span 2 — Design - Trace - R.E.F. Check - W.H.
DESIGN- I.S. DETAIL- J.M.M. TRACE- CHECK- R.E.F.	BRIDGE NO. SURVEY- PLOT-

STATE HIGHWAY COMMISSION
BRIDGE DIVISION

RAMP "J"
OVER
ROUTE 1 S.B. & RAMP "M"
IN THE TOWN OF
KITTERY
YORK COUNTY
STRUCTURAL STEEL DETAILS

SHEET 10 OF 15 AUGUSTA, MAINE

HOWARD, NEEDLES, TAMMEN & BERGENDOFF
CONSULTING ENGINEERS
NEW YORK BOSTON KANSAS CITY

183-10 KITTERY (5)

BRUNING 44-302

B. P. R. REG. NO.	STATE	PROJECT NUMBER	SHEET NO.	TOTAL SHEETS
1	MAINE	1-95-1(5)	48	199

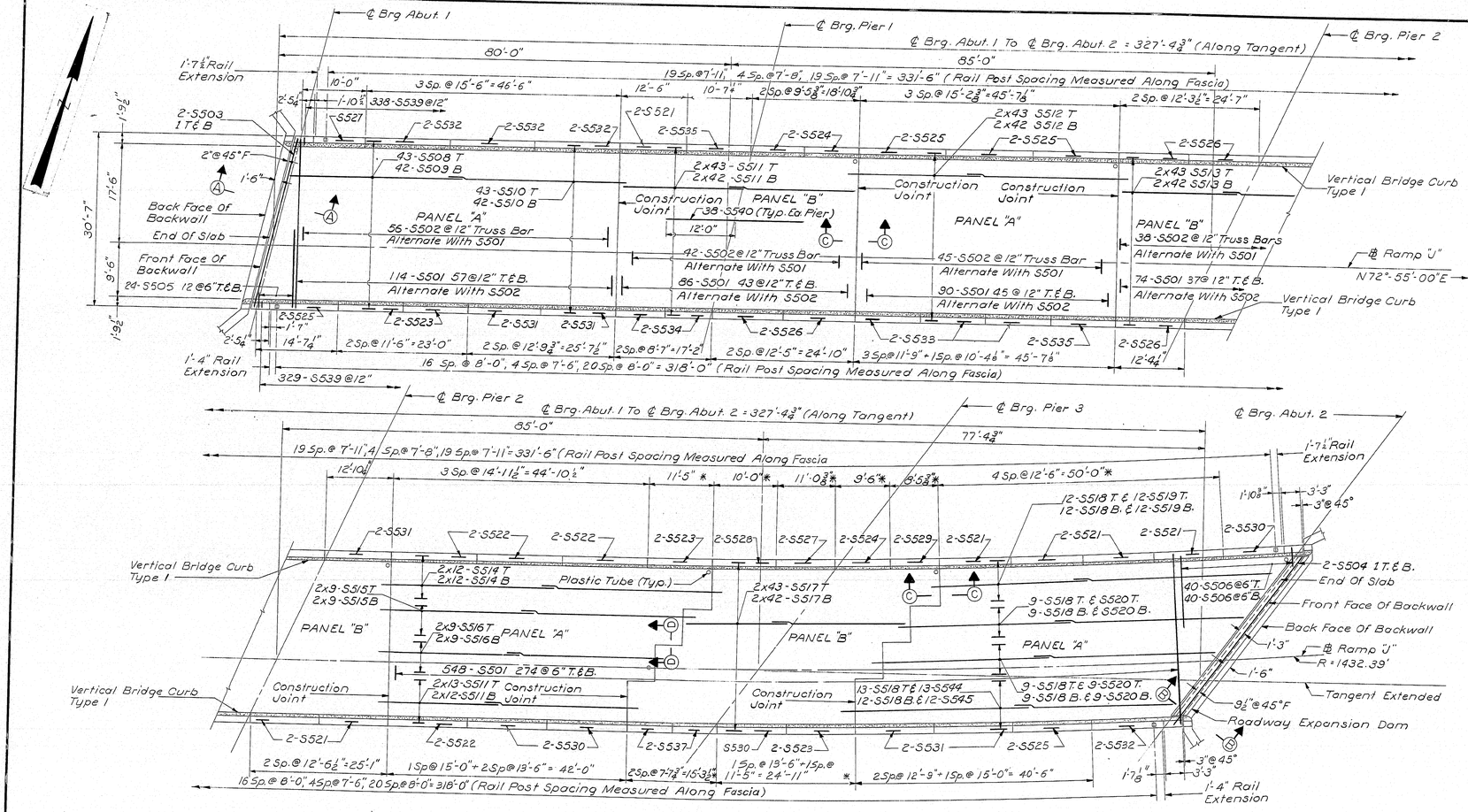

PLAN
1" = 10'

GENERAL SUPERSTRUCTURE NOTES

At all curb joints, break the bond between concrete surfaces with a suitable grade of clear oil. Form "V" grooves on outside face of curb and slab at each vertical joint. Provide joints in vertical bridge curb at curb construction joints.

2. For Bridge Rail, see Standard Details BD 106-69

3. Place concrete in "A" panels before placing concrete in "B" panels. See Note "A".

4. Vertical bridge curb will be paid for under Item 609.13.

5. Reinforcing steel to have 2" minimum cover unless otherwise shown.

6. For Sections A-A, B-B, C-C and D-D, see Sheet 12.

7. Coat the top and outside face of curb down to the ½" drip notch and all exposed faces of the end posts with "Protective Coating for Concrete Surfaces"

NOTE "A"

As an alternate and at the contractors option, the deck concrete may be placed in one continuous operation, thus eliminating slab construction joints and waterstops. Continuous placing of concrete in the deck shall be made with the use of an acceptable set-retarder and liquid concrete curing compound. Payment for set-retarder shall be in accordance with Section 502 of the Standard Specifications. Payment for liquid curing compound to be incidental to the various contract items.

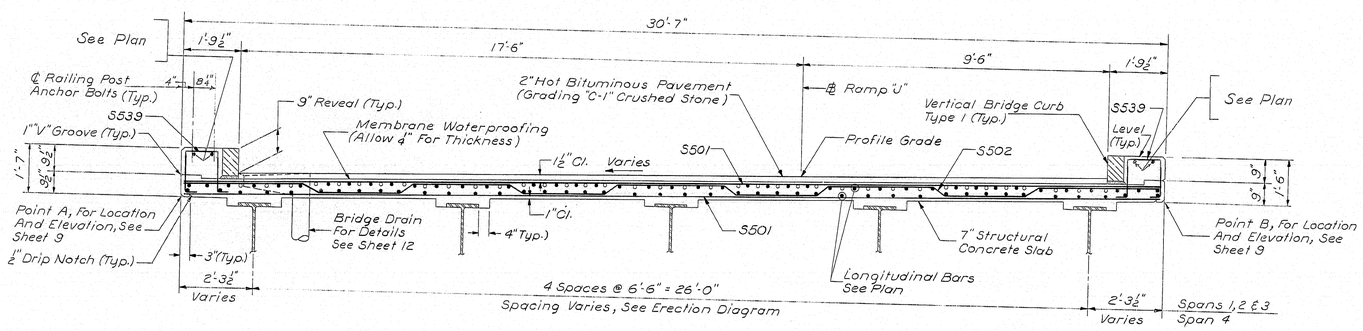

TRANSVERSE SECTION
½" = 1'-0"

BRIDGE DRAIN NOTES

1. 5 Bridge Drains on North Side of bridge. One each in Spans 1, 2 and 3, and 2 in Span 4.

2. The exact position of drains is to be determined in the field. Drains shall clear the abutments by five feet and piers by ten feet, minimum. For approximate locations, see Sheet 1.

HOWARD, NEEDLES, TAMMEN & BERGENDOFF
CONSULTING ENGINEERS
NEW YORK BOSTON KANSAS CITY

DESIGN- I.S. DETAIL- R.D.F.
TRACE-
CHECK- R.E.F.
BRIDGE NO.
SURVEY-
PLOT-

STATE HIGHWAY COMMISSION
BRIDGE DIVISION
RAMP "J"
OVER
ROUTE 1 S.B. & RAMP "M"
IN THE TOWN OF
KITTERY
YORK COUNTY
SUPERSTRUCTURE
SHEET 11 OF 15 AUGUSTA, MAINE

183-11 KITTERY (5)

BRUNING 44-302

B. P. R. REG. NO.	STATE	PROJECT NUMBER	SHEET NO.	TOTAL SHEETS
1	MAINE	I-95-1(5)	50	199

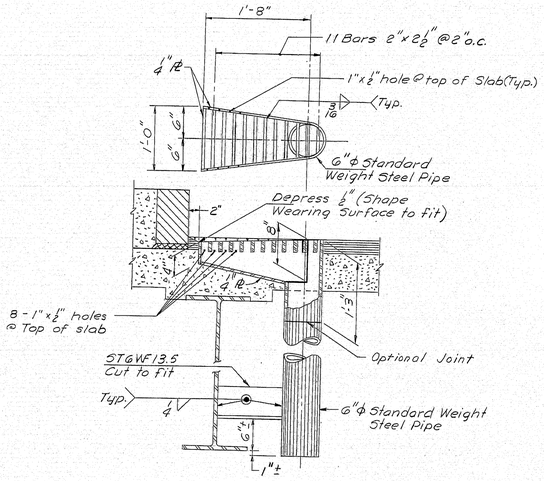

SUPERSTRUCTURE DRAIN
1"=1'-0"
All steel for drain to be galvanized

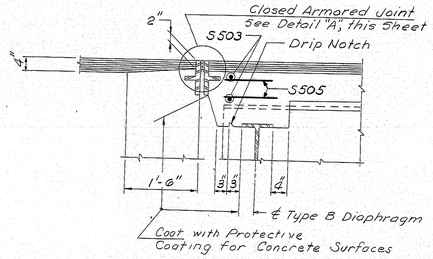

SECTION A-A
3/4"=1'-0"

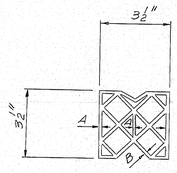

PREFORMED ELASTIC JOINT SEALER
No Scale

NOTE:
The configuration of the preformed elastic joint sealer may be changed from that shown in order to conform with shapes as produced by various manufacturers. However, the cross-sectional dimensions including those of the internal elements and the shell (A and B) shall be approved by the Engineer before ordering the preformed elastic joint sealer.

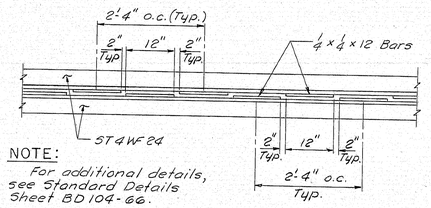

NOTE:
For additional details, see Standard Details Sheet BD104-06.

PLAN-ARMORED JOINT
3/4"=1'-0"

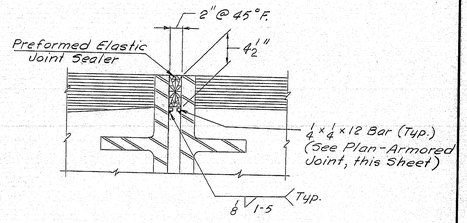

DETAIL "A"
3"=1'-0"

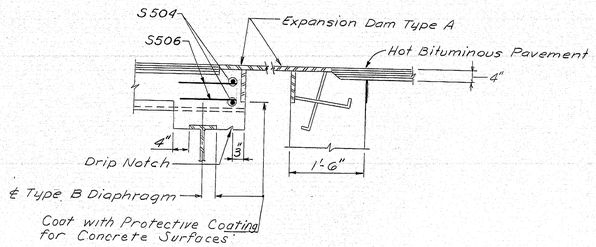

SECTION B-B
3/4"=1'-0"

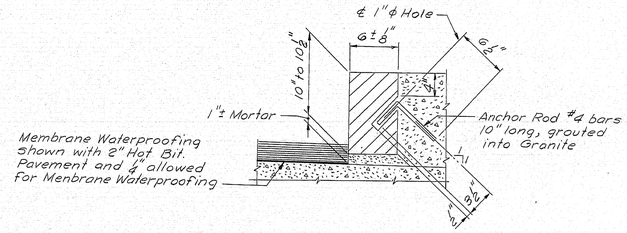

TYPICAL CURB SECTION
1½"=1'-0"

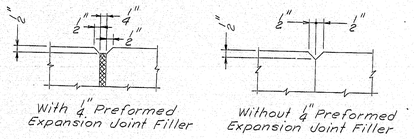

With ¼" Preformed Expansion Joint Filler

Without ¼" Preformed Expansion Joint Filler

1" V-GROOVES
3"=1'-0"

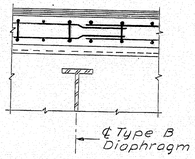

WITHOUT CONSTRUCTION JOINT

SECTION C-C
3/4"=1'-0"

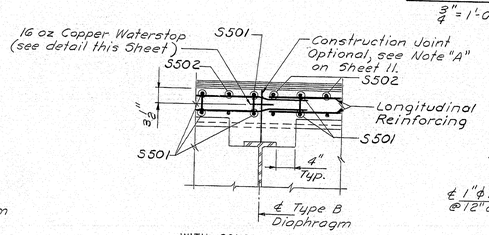

WITH CONSTRUCTION JOINT

SECTION C-C
3/4"=1'-0"

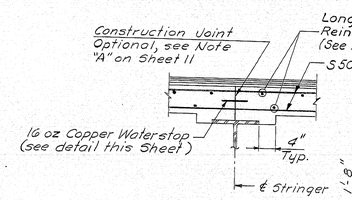

SECTION D-D
3/4"=1'-0"

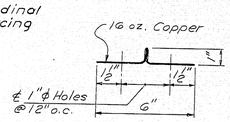

COPPER WATERSTOP DETAIL
3"=1'-0"

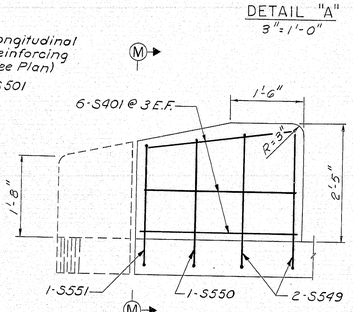

ELEVATION

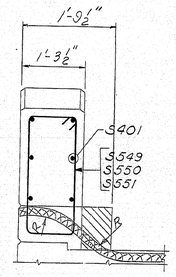

SECTION M-M

END POST DETAIL
3/4"=1'-0"

NOTE:
Radius R is to be large enough to prevent cutting, crimping or breaking Preformed Elastic Joint Sealer.

DESIGN- I.S. DETAIL- J.M.M.
TRACE-
CHECK- R.E.F.

BRIDGE NO.
SURVEY--
PLOT-

STATE HIGHWAY COMMISSION
BRIDGE DIVISION

RAMP "J"
OVER
ROUTE 1 S B & RAMP "M"
IN THE TOWN OF
KITTERY
YORK COUNTY
SUPERSTRUCTURE DETAILS

SHEET 12 OF 15 AUGUSTA, MAINE

HOWARD, NEEDLES, TAMMEN & BERGENDOFF
CONSULTING ENGINEERS
NEW YORK BOSTON KANSAS CITY

183-12 KITTERY (5)

BRUNING 44-302

R. P. R. REG. NO.	STATE	PROJECT NUMBER	SHEET NO.	TOTAL SHEETS
1	MAINE	I-95-1(5)	51	199

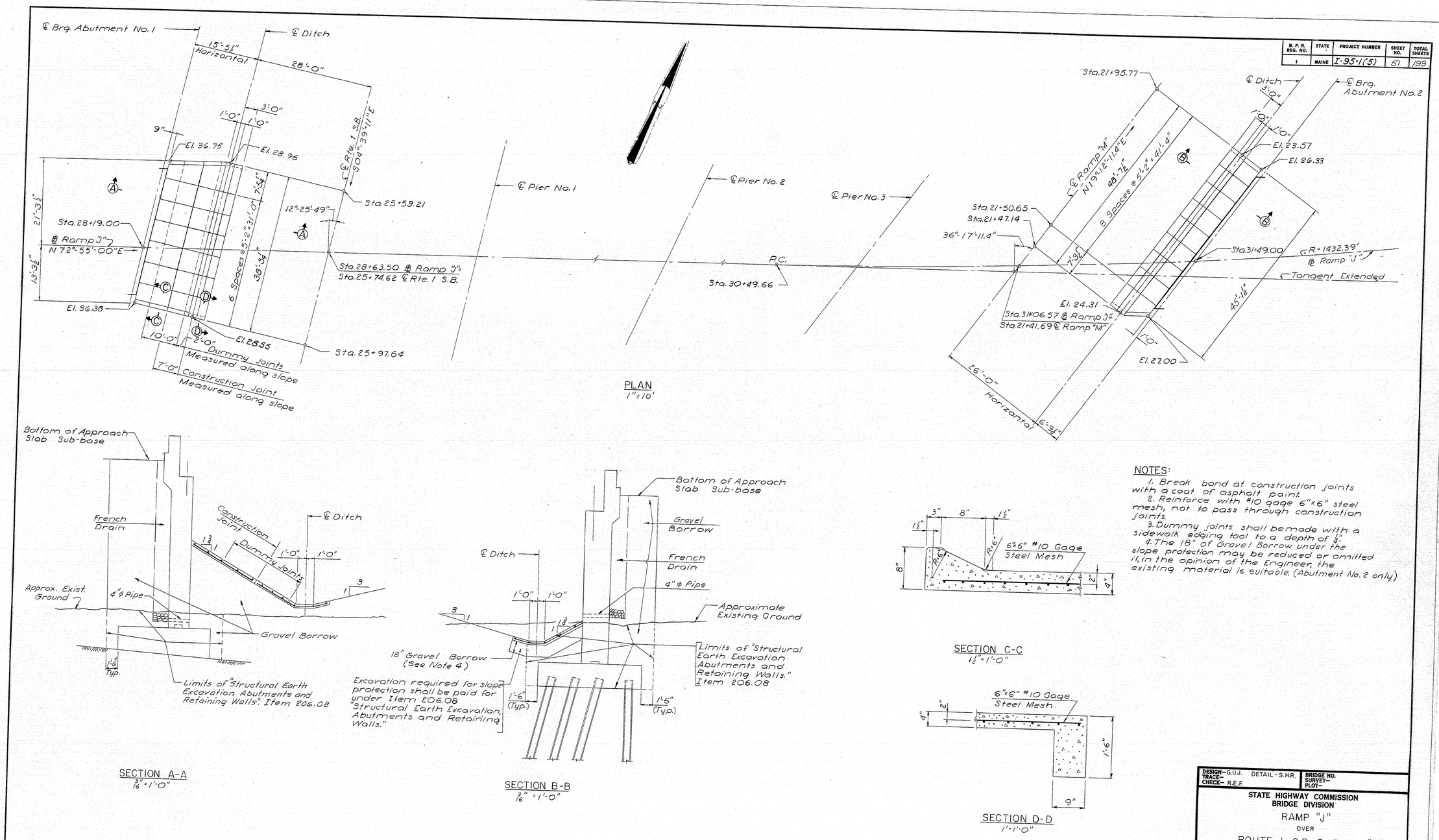

PLAN
1" = 10'

SECTION A-A
3/16" = 1'-0"

SECTION B-B
3/16" = 1'-0"

SECTION C-C
1½" = 1'-0"

SECTION D-D
1'-1'-0"

NOTES:

1. Break bond at construction joints with a coat of asphalt paint.
2. Reinforce with #10 gage 6"x6" steel mesh, not to pass through construction joints.
3. Dummy joints shall be made with a sidewalk edging tool to a depth of ¼".
4. The 18" of Gravel Borrow under the slope protection may be reduced or omitted if, in the opinion of the Engineer, the existing material is suitable. (Abutment No. 2 only)

DESIGN– G.U.J. DETAIL– S.H.R.
TRACE–
CHECK– R.E.F.

BRIDGE NO.
SURVEY–
PLOT–

STATE HIGHWAY COMMISSION
BRIDGE DIVISION

RAMP "J"
OVER
ROUTE 1 S.B. & RAMP "M"
IN THE TOWN OF
KITTERY
YORK COUNTY

SLOPE PROTECTION

HOWARD, NEEDLES, TAMMEN & BERGENDOFF
CONSULTING ENGINEERS
NEW YORK BOSTON KANSAS CITY

SHEET 13 OF 15 AUGUSTA, MAINE

183-13 KITTERY (5)

BRUNING 44-302

TWO ROD ROAD UNDERPASS (MM 42.0)

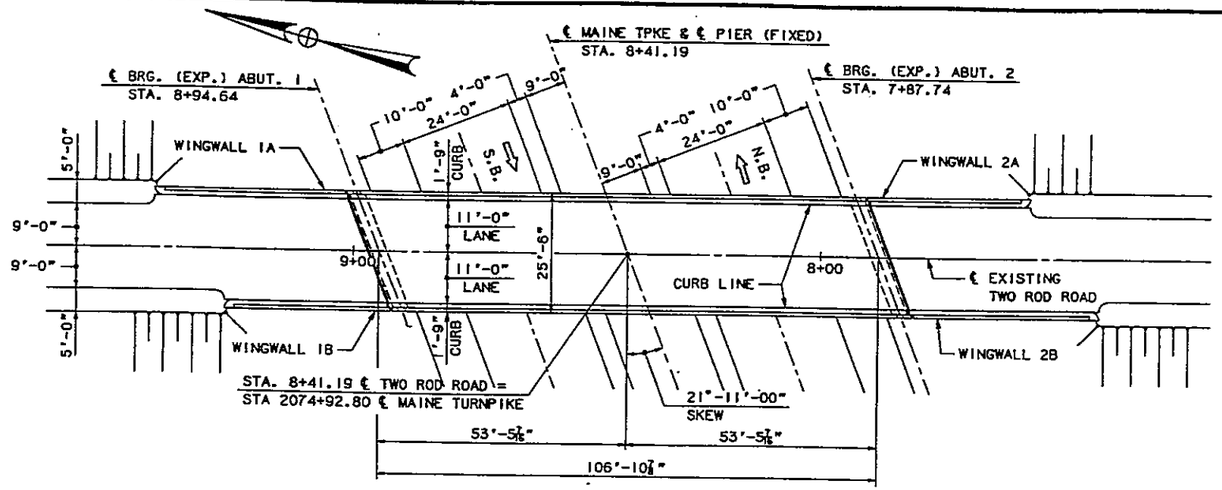

PLAN - EXISTING
1/16" = 1'-0"

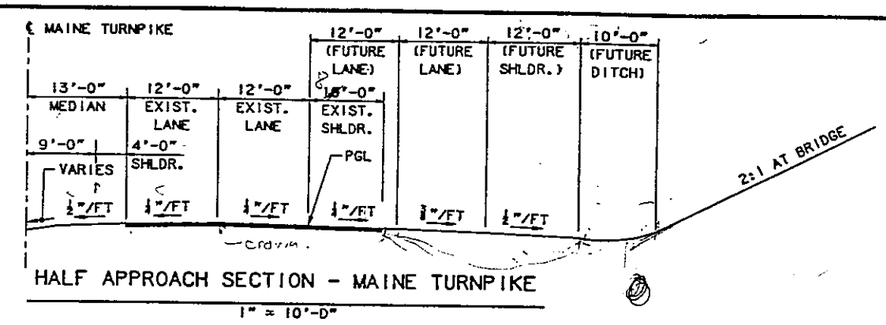

HALF APPROACH SECTION - MAINE TURNPIKE
1" = 10'-0"

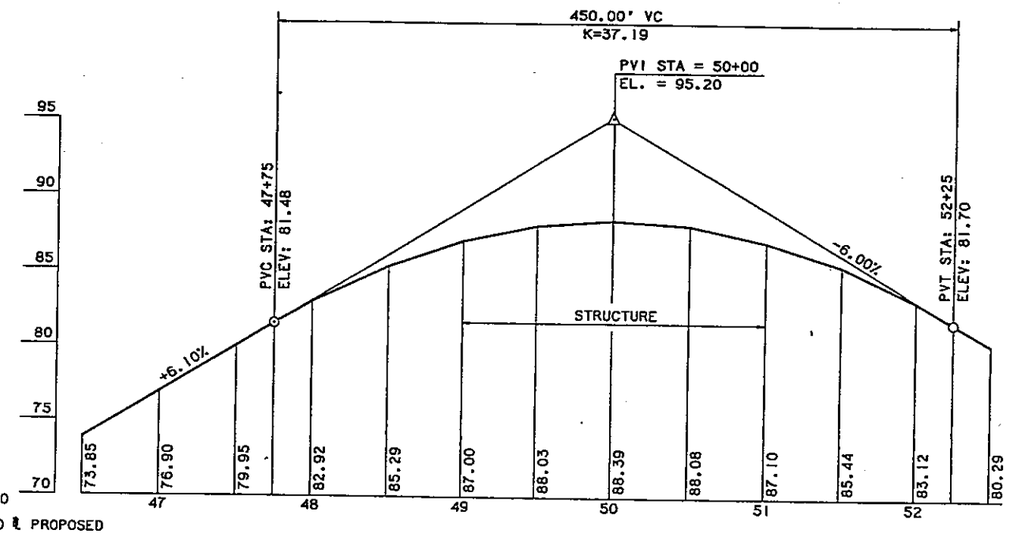

PROPOSED PROFILE
HORIZ. 1" = 50'
VERT. 1" = 5'

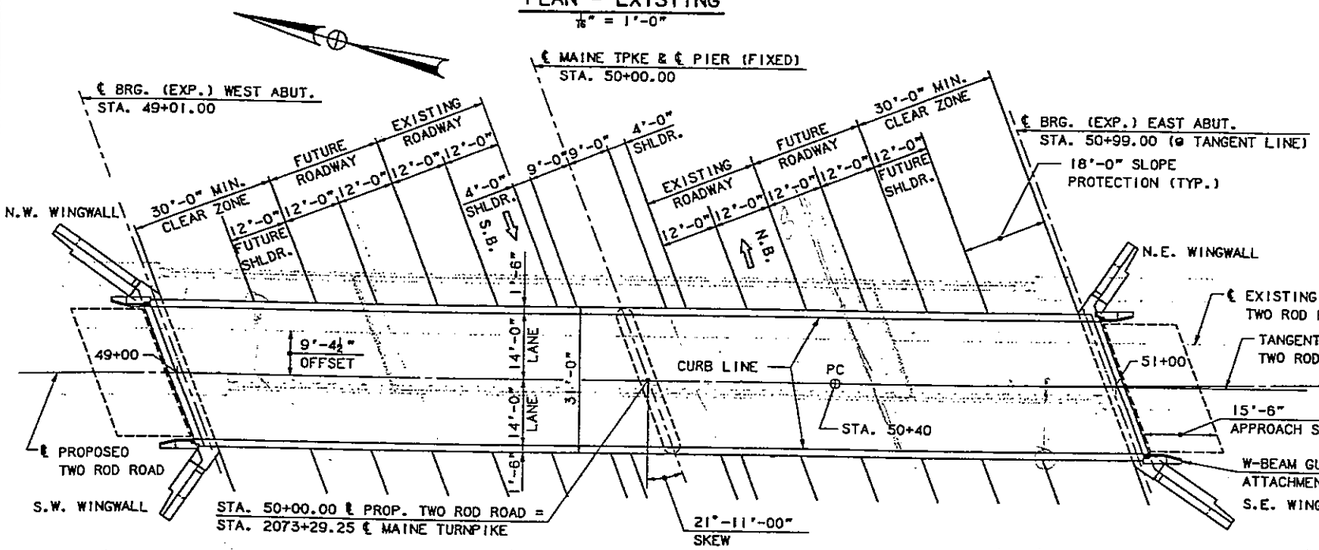

PLAN - PROPOSED
1/16" = 1'-0"

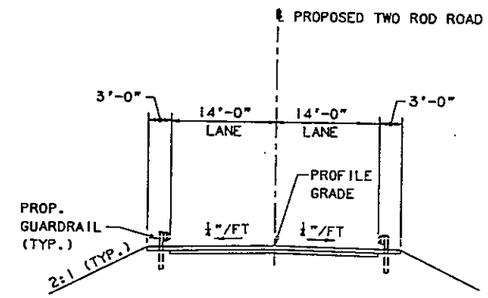

APPROACH SECTION - TWO ROD ROAD
1" = 10'-0"

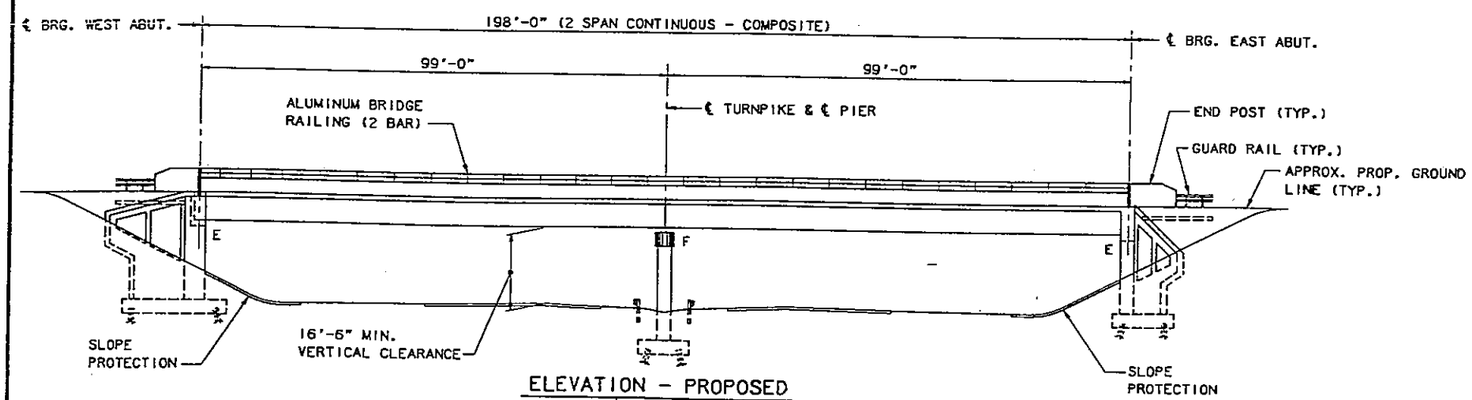

ELEVATION - PROPOSED
1/16" = 1'-0"

No.	Revision	By:	Date:		By:	Date:
				Designed	AD	6/98
				Drawn	LS	6/98
				Checked	CC	6/98
				In charge of:	RAL	

Maine Turnpike Authority
Maine Turnpike

Trans pass

TWO ROD ROAD UNDERPASS

PLAN & ELEVATION

HNTB
ARCHITECTS ENGINEERS PLANNERS

Contract 98.5

Sheet No. TR-43 of

METPKOIA

GENERAL NOTES

SPECIFICATIONS

DESIGN

AASHTO STANDARD SPECIFICATIONS FOR HIGHWAY BRIDGES 1996.

CONTRACT

STATE OF MAINE, DEPARTMENT OF TRANSPORTATION, STANDARD SPECIFICATIONS, HIGHWAYS AND BRIDGES, REVISION OF APRIL 1995.

DESIGN LOADING

LIVE LOAD

HS 25, 500,000 CYCLES

DESIGN METHOD

LOAD FACTOR DESIGN

MATERIALS

CONCRETE

SUPERSTRUCTURE SLAB, PARAPETS AND END POSTS CONCRETE SHALL BE CLASS AAA, f_c' =4,500 P.S.I.
ALL OTHER SUBSTRUCTURE AND SLOPE PROTECTION CONCRETE SHALL BE CLASS A, f_c' =4,000 P.S.I.

REINFORCING STEEL

AASHTO M31 GRADE 60. (EPOXY-COATED AND UNCOATED BARS).

STRUCTURAL STEEL

WELDED GIRDERS: FLANGES, WEBS, SPLICE PLATES, BEARING STIFFENERS AND POT BEARINGS SHALL BE AASHTO M270, GRADE 50.
ALL OTHER STRUCTURAL STEEL SHALL BE AASHTO M270, GRADE 36.
HIGH STRENGTH BOLTS SHALL BE AASHTO M164.

BASIC ALLOWABLE STRESSES

CONCRETE

f'c = 4,500 P.S.I. (SUPERSTRUCTURE)
f'c = 4,000 P.S.I. (ALL OTHER)

REINFORCING STEEL

fy = 60,000 P.S.I.

STRUCTURAL STEEL

AASHTO M270 GRADE 50 Fy = 50,000 P.S.I.
AASHTO M270 GRADE 36 Fy = 36,000 P.S.I.

NOTES:

1. COPIES OF AS-BUILT PLANS ARE ON FILE AT THE MAINE TURNPIKE AUTHORITY. A PORTION OF THESE PLANS ARE INCLUDED IN THIS CONTRACT FOR THE CONTRACTOR'S CONVENIENCE. THE COMPLETENESS AND ACCURACY OF THESE PLANS IS NOT GUARANTEED.

2. ALL PROPOSED ELEVATIONS REFERENCE THE NATIONAL GEODETIC VERTICAL DATUM (NGVD) 1929. THE ELEVATIONS REFERENCED ON THE AS-BUILT PLANS MAY DIFFER.

ITEM	DESCRIPTION	UNIT	QUANTITY
202.19	REMOVING EXISTING BRIDGE	L.S.	1
206.082	STRUCTURAL EARTH EXCAVATION - MAJOR STRUCTURES	C.Y.	1500
206.10	STRUCTURAL EARTH EXCAVATION - PIERS	C.Y.	95
304.10	AGGREGATE SUBBASE COURSE - GRAVEL	C.Y.	435
403.08	HOT BITUMINOUS PAVEMENT, GRADING C	TON	125
501.231	DYNAMIC LOADING TEST	EACH	3
501.40	STEEL H-BEAM PILES 53 LBS/FT, DELIVERED	L.F.	10,800
501.401	STEEL H-BEAM PILES 53 LBS/FT, IN PLACE	L.F.	10,800
501.90	PILE TIPS	EACH	92
501.91	PILE SPLICES	EACH	276
502.21	STRUCTURAL CONCRETE, ABUTMENTS AND RETAINING WALLS	C.Y.	510
502.23	STRUCTURAL CONCRETE PIERS	C.Y.	70
502.261 ◊1	STRUCTURAL CONCRETE ROADWAY AND PARAPETS ON STEEL BRIDGES (215 C.Y.)*	L.S.	1
502.31	STRUCTURAL CONCRETE APPROACH SLAB (25 C.Y.)*	L.S.	1
503.12	REINFORCING STEEL, FABRICATED AND DELIVERED	LB.	45,500
503.13	REINFORCING STEEL, PLACING	LB.	45,500 ◊1
503.14	EPOXY-COATED REINFORCING STEEL, FABRICATED AND DELIVERED	LB.	88,500
503.15	EPOXY-COATED REINFORCING STEEL, PLACING	LB.	88,500
504.702	STRUCTURAL STEEL FABRICATED AND DELIVERED, WELDED (20,500 LBS. GRADE 36, 180,400 LBS. GRADE 50)*	L.S.	1
504.71	STRUCTURAL STEEL ERECTION (200,900 LB.)*	L.S.	1
505.09	STUD WELDED SHEAR CONNECTORS (1830 EA.)*	L.S.	1
506.30	SHOP COATING OF STRUCTURAL STEEL (200,900 LB.)*	L.S.	1
506.31	FIELD REPAIR OF DAMAGED COATING	L.S.	1
507.0922	ALUMINUM BRIDGE RAILING, 2 BAR (405 LF.)*	L.S.	1
508.13	MEMBRANE WATERPROOFING (660 S.Y.)*	L.S.	1
511.09	TEMPORARY EARTH SUPPORT SYSTEM	L.S.	1
512.081	FRENCH DRAINS (125 L.F.)*	L.S.	1
513.09	SLOPE PROTECTION - PORTLAND CEMENT CONCRETE	S.Y.	195
514.06	CURING BOX FOR CONCRETE CYLINDERS	EACH	1
515.202	CLEAR PROTECTIVE COATING FOR CONCRETE SURFACE	S.Y.	340
520.221	EXPANSION DEVICE - LOCKING COMPRESSION SEAL W/STEEL EDGE BEAMS (67 L.F.)*	EACH	2
523.10	POT BEARINGS	EACH	15
524.362	TEMPORARY SUPPORT OF STRUCTURES	L.S.	1
524.40	PROTECTIVE SHIELD	S.Y.	685
526.304	TEMPORARY CONCRETE BRIDGE BARRIER TYPE I - DOUBLE FACE	L.F.	320
609.15	SLOPED CURB TYPE I	L.F.	440
626.22	NON-METALLIC CONDUIT (4"Ø PVC)	L.F.	840

* QUANTITIES FOR ESTIMATING PURPOSES ONLY

INDEX OF DRAWINGS

SHEET NO.	TITLE
TR-1	PLAN & ELEVATION
TR-2	INDEX & QUANTITIES
TR-3	BORING PLAN AND LOGS
TR-4	BORING LOGS
TR-5	BORING LOGS
TR-6	BORING LOGS
TR-7	BORING LOGS
TR-8	FOUNDATION PLAN
TR-9	PROPOSED WEST ABUTMENT
TR-10	PROPOSED EAST ABUTMENT
TR-11	WEST ABUTMENT REINFORCEMENT
TR-12	EAST ABUTMENT REINFORCEMENT
TR-13	MISCELLANEOUS DETAILS
TR-14	END POST DETAILS
TR-15	WINGWALL DETAILS
TR-16	PIER DETAILS
TR-17	FRAMING PLAN
TR-18	STRUCTURAL STEEL DETAILS
TR-19	POT BEARING DETAILS
TR-20	DECK REINFORCEMENT & TYPICAL SECTION
TR-21	SUPERSTRUCTURE DETAILS I
TR-22	SUPERSTRUCTURE DETAILS II
TR-23	SCUPPER DETAILS
TR-24	ALUMINUM BRIDGE RAIL DETAILS
TR-25	EXPANSION JOINT DETAILS I
TR-26	EXPANSION JOINT DETAILS II
TR-27	EXPANSION JOINT DETAILS III
TR-28	SLOPE PROTECTION
TR-29	CONSTRUCTION SEQUENCE I
TR-30	CONSTRUCTION SEQUENCE II
TR-31	CONSTRUCTION SEQUENCE III
TR-32	CONSTRUCTION SEQUENCE IV
TR-33	BRIDGE BARRIER DETAILS
TR-34	REINFORCING SCHEDULE I
TR-35	REINFORCING SCHEDULE II
TR-36	REINFORCING SCHEDULE III

STANDARD DETAIL SHEETS

SHEET NO.	TITLE
BD 112-93	DIAPHRAGMS & CROSSFRAMES
BD 201-93	CONCRETE END POST 2-BAR
BD 501-93	SUBSTRUCTURE DETAILS
BD 521-93	SUPERSTRUCTURE DETAILS

AS-BUILT PLANS

SHEET NO.	TITLE
1D93.1	GENERAL PLAN AND ELEVATION
1D93.2	ABUTMENTS
1D93.3	ABUTMENTS
1D93.4	CENTER PIER
1D93.5	FRAMING PLAN AND BEAM DETAILS
1D93.6	SLAB DETAILS

					By:	Date:
				Designed	AD	6/98
				Drawn	LS	6/98
◊1	QUANTITY REVISION	AD	7/21/98	Checked	PMK	6/98

Maine Turnpike Authority
Maine Turnpike

Trans pass

TWO ROD ROAD UNDERPASS

INDEX & QUANTITIES

HNTB
ARCHITECTS ENGINEERS PLANNERS

Contract 98.5

Sheet No. TR-2
44 of 88

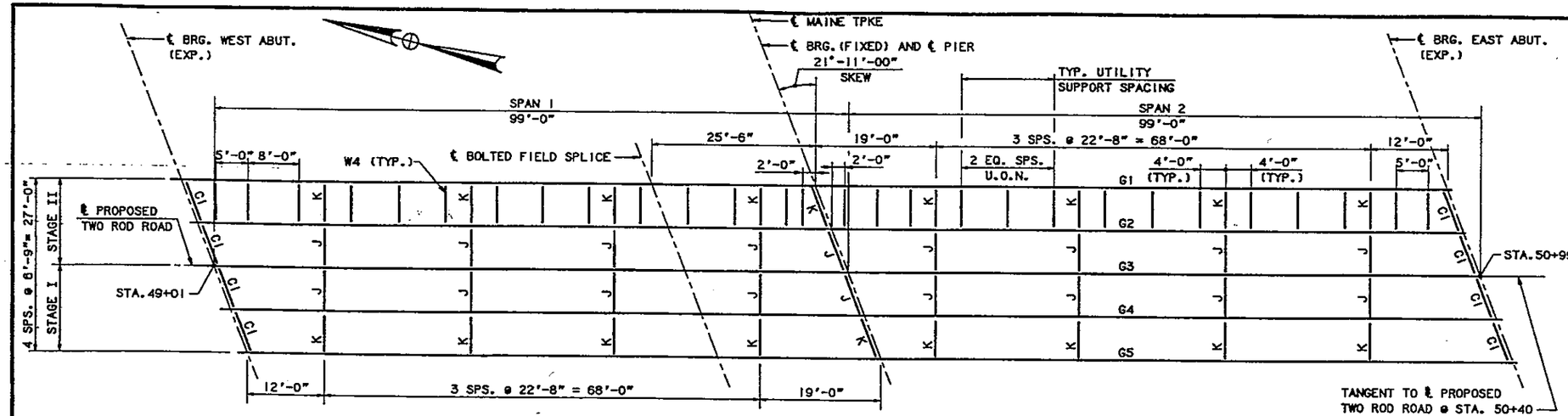

FRAMING PLAN

1" = 10'-0"

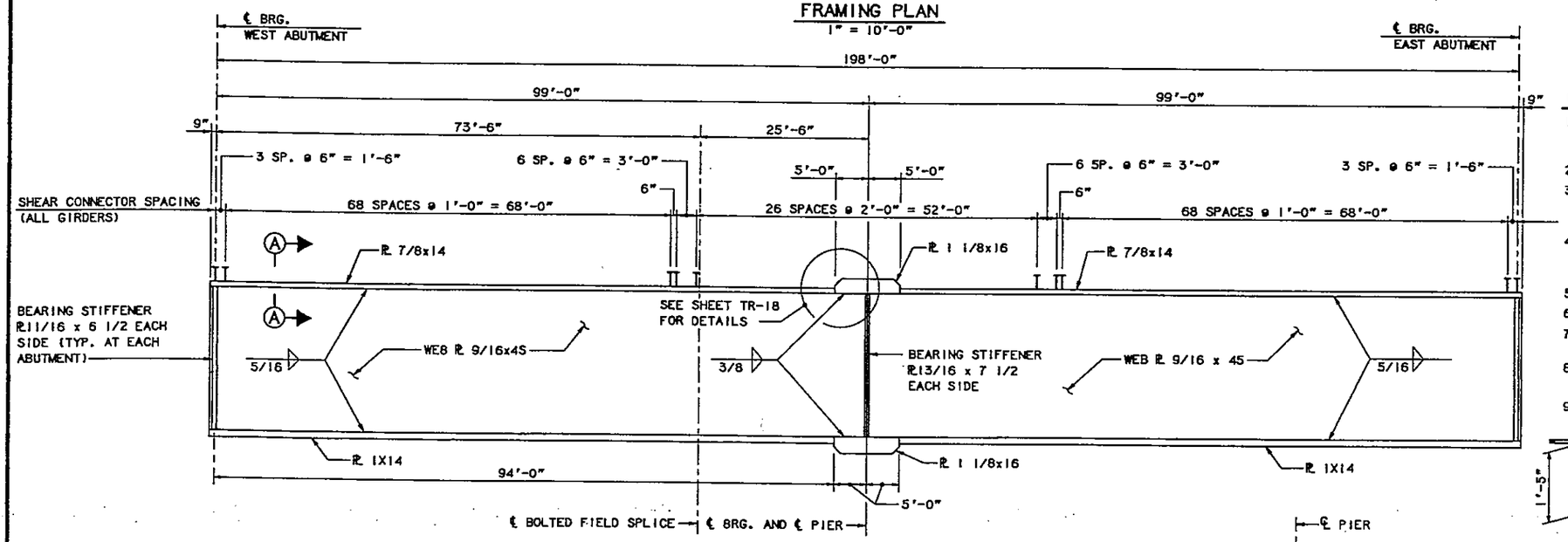

GIRDER ELEVATION

NO SCALE

STRUCTURAL STEEL NOTES

1. CAMBER ORDINATES, AS SHOWN, ARE COMPUTED TO COMPENSATE FOR ALL DEAD LOAD DEFLECTIONS AND THE EFFECT OF VERTICAL CURVATURE.
2. BUTT WELD SPLICES IN FLANGES SHALL NOT BE LESS THAN ONE FOOT MIN. FROM TRANSVERSE BUTT WELDS IN THE WEB PLATE OR CONNECTION PLATE TO WEB WELDS.
3. BUTT WELDS AT WEB SPLICES AND FLANGE SPLICES SHALL BE GROUND FLUSH IN LONGITUDINAL DIRECTION OF GIRDER.
4. BEARING STIFFENERS SHALL BE PLUMB AFTER ERECTION AND DEAD LOADING OF THE STRUCTURE.
5. CROSSFRAME OR DIAPHRAGM CONNECTION PLATES MAY BE EITHER PLUMB OR NORMAL TO THE TOP FLANGE.
6. FILLER PLATES SHALL CONFORM TO AASHTO M270, GRADE 36. MILL TESTS FOR FILLER PLATE MATERIAL WILL NOT BE REQUIRED.
7. FOR DETAILS OF DIAPHRAGM & CROSSFRAME TYPES C1, J AND K, SEE STANDARD DETAIL SHEET BD 112-93.
8. WELDED GIRDERS: FLANGES, WEBS, SPLICE PLATES AND BEARING STIFFENERS SHALL BE AASHTO M270, GRADE 50. BOLTS SHALL BE AASHTO M164. ALL OTHER STRUCTURAL STEEL SHALL BE AASHTO M270, GRADE 36.
9. ALL FLANGE AND WEB PLATES SHALL BE DESIGNATED "CVN" WITH THE MATERIAL MEETING SPECIFIED MINIMUM NOTCH TOUGHNESS REQUIREMENTS IN ACCORDANCE WITH AASHTO SPECIFICATIONS (TEMPERATURE ZONE 3 DESIGNATION).
10. FOR TENSION-FLANGE CONNECTION DETAIL, SEE STANDARD DETAIL SHEET BD-112-93.
11. FOR SHEAR CONNECTOR LAYOUT & SECTION A-A, SEE SHEET NO. TR-18.
12. SIGN SUPPORTS SHALL BE GALVANIZED AND INCIDENTAL TO ITEM 520.221, SEE SHEET TR-18 FOR DETAILS.

CONDUIT NOTES

1. SUPPORT SYSTEMS SHALL BE AS MANUFACTURED BY AMERICON INTERNATIONAL FOR 4" PVC (4.35" O.D.) OR APPROVED EQUAL.
2. A #10 PULLWIRE SHALL BE LEFT IN ALL CONDUITS.
3. THE CONDUITS SHALL BE RODDED AND CLEANED WITH A CLOSE FITTING MANDREL AND WIRE BRUSH BEFORE INSERTING PULLWIRES. CONDUITS SHALL BE FITTED WITH THREADED CAPS.
4. COST OF FURNISHING AND INSTALLING SUPPORTING SYSTEM, CONDUIT, PULLWIRES AND FITTINGS SHALL BE PAID FOR UNDER ITEM 626.22. (DOES NOT INCLUDE W4 OR PL⅜)
5. PROVIDE EXPANSION JOINT AT EXPANSION ABUTMENTS.
6. SEE ABUTMENT DETAILS FOR OPENING ELEVATIONS & LOCATIONS.
7. SELECT CONDUIT LENGTHS SO THAT COUPLING LOCATIONS DO NOT COINCIDE WITH SUPPORT LOCATIONS.
8. SWEEP CONDUITS BEHIND GUARD RAIL. BEGIN SWEEP AT BACK FACE OF BACKWALL. (MINIMUM 20' RADIUS)
9. PVC CONDUITS NEED NOT BE SUPPORTED AT DIAPHRAGM LOCATIONS.

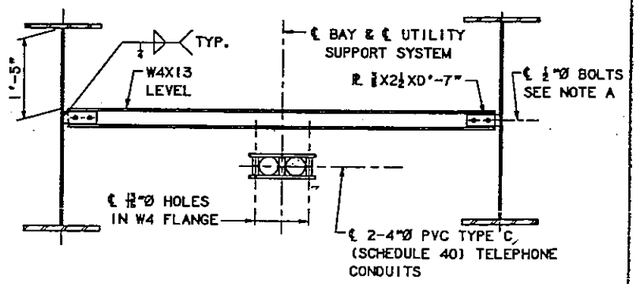

UTILITY SUPPORT DETAIL

NOTE A

NO SCALE

PROVIDE ¾"X1" VERTICAL SLOTTED HOLES IN W4

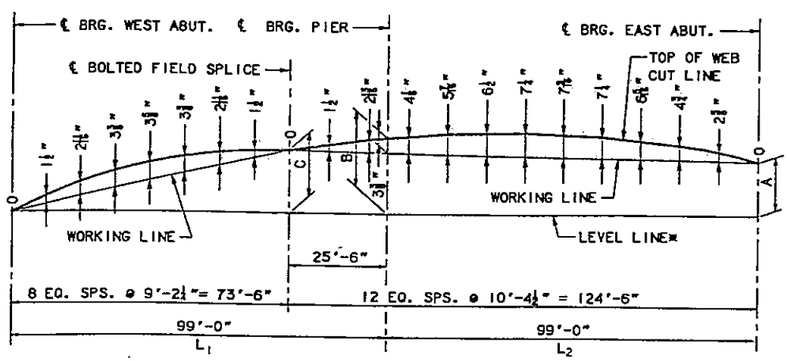

* LEVEL LINE IS THE HORIZONTAL REFERENCE LINE THROUGH LOWEST POINT ON CUT LINE.

CAMBER DIAGRAM

NO SCALE

GIRDER NO.	DIMENSIONS IN FEET		
	A	B	C
G1	0.378	1.506	1.445
G2	0.240	1.435	1.392
G3	0.090	1.366	1.341
G4	-0.048	1.296	1.289
G5	-0.185	1.227	1.238

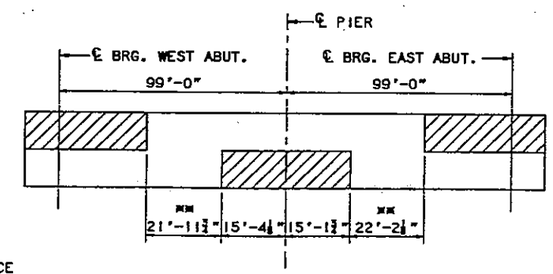

GIRDER STRESS DIAGRAM

NO SCALE

AREAS OF GIRDER WHICH WILL ALWAYS BE IN COMPRESSION. ALL OTHER AREAS WILL BE IN TENSION OR ARE AREAS OF STRESS REVERSALS.

** STRESS REVERSALS.

No.	Revision	By:	Date:		By:	Date:
				Designed	AD	6/98
				Drawn	LS	6/98
				Checked	CLC	6/98
				In charge of:	RAL	

Maine Turnpike Authority
Maine Turnpike

Trans pass

TWO ROD ROAD UNDERPASS

FRAMING PLAN

HNTB
ARCHITECTS ENGINEERS PLANNERS

Contract 98.5

Sheet No. TR-17
59 of 88

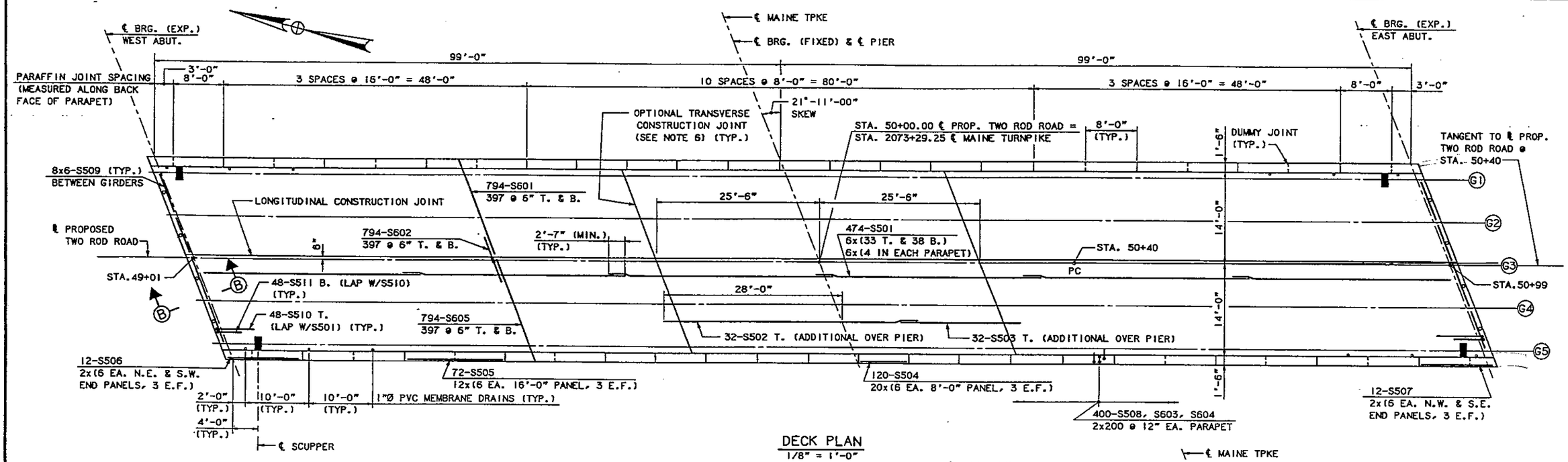

DECK PLAN
1/8" = 1'-0"

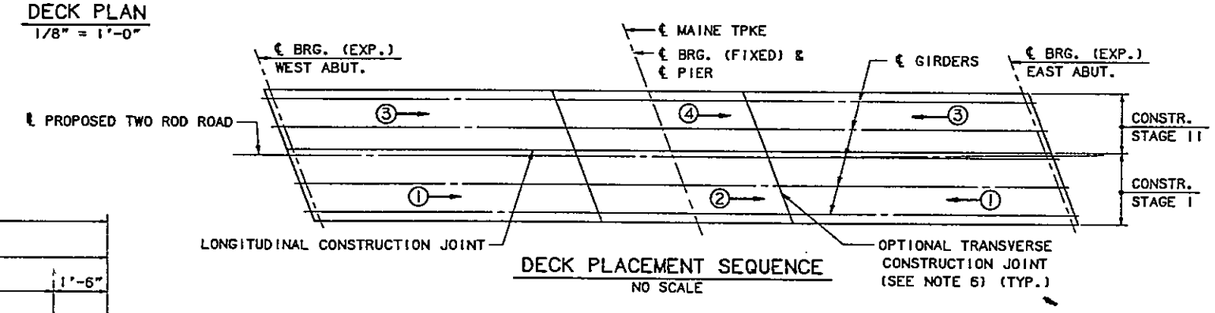

DECK PLACEMENT SEQUENCE
NO SCALE

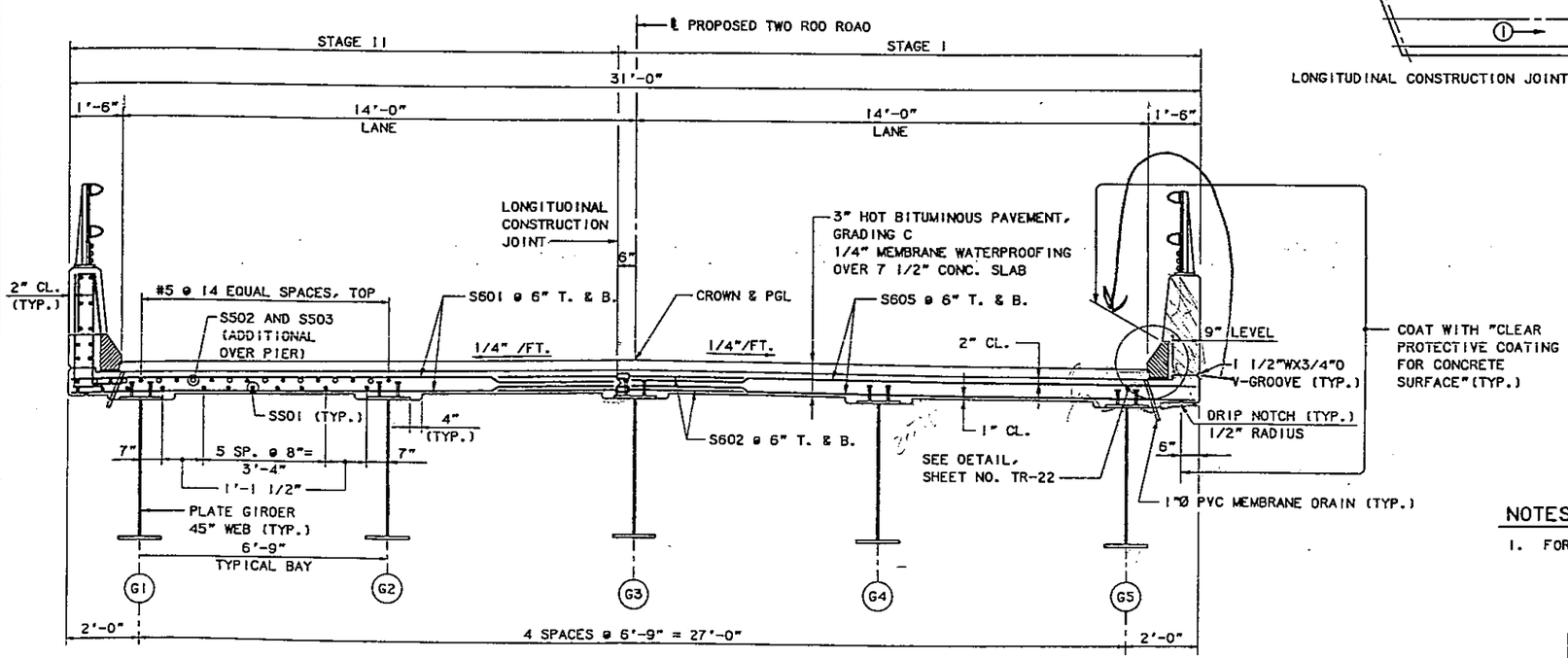

TYPICAL SECTION
(LOOKING UPSTATION BEFORE STA. 50+40)
1/2" = 1'-0"

PLACEMENT NOTES

1. THE NUMBERS IN CIRCLES INDICATE PLACING SEQUENCE. THE ARROWS INDICATE DIRECTION OF PLACEMENT.
2. THE FORMWORK FOR THE CONSTRUCTION JOINTS SHALL REMAIN IN PLACE UNTIL A MINIMUM OF 48 HOURS HAS ELAPSED AFTER PLACEMENT OF THE SLAB. AFTER WHICH, REMOVAL OF FORMWORK MEETING THE REQUIREMENTS FOR FORM REMOVAL OF SECTION 502 (STRUCTURAL CONCRETE) OF THE STANDARD SPECIFICATIONS, MAY PROCEED.
3. POURS DESIGNATED BY THE SAME NUMBER DO NOT NECESSARILY HAVE TO BE POURED THE SAME DAY. A WAITING PERIOD OF 72 HOURS IS NECESSARY BETWEEN ADJACENT POURS.
4. STAY IN PLACE FORMS ARE NOT ALLOWED TO BE USED.
5. BEGIN PLACEMENT AT THE LOW END OF THE BLOCK.
6. THE OPTIONAL TRANSVERSE CONSTRUCTION JOINT MAY BE OMITTED PROVIDED THAT THE CONCRETE OF THE ENTIRE DECK SLAB REMAINS PLASTIC UNTIL THE COMPLETION OF THE LAST PLACEMENT AND ALL OTHER SPECIFICATIONS FOLLOWED.

NOTES

1. FOR SUPERSTRUCTURE NOTES, SEE SHEET TR-21.

No.	Revision	By:	Date:		By:	Date:
				Designed	AD	6/98
				Drawn	LS	6/98
				Checked	CC	6/98
				In charge of:	RAL	

Maine Turnpike Authority
Maine Turnpike

Trans pass

TWO ROD ROAD UNDERPASS

DECK REINFORCEMENT & TYPICAL SECTION

HNTB
ARCHITECTS ENGINEERS PLANNERS

Contract 98.5

Sheet No. TR-20
62 of 88

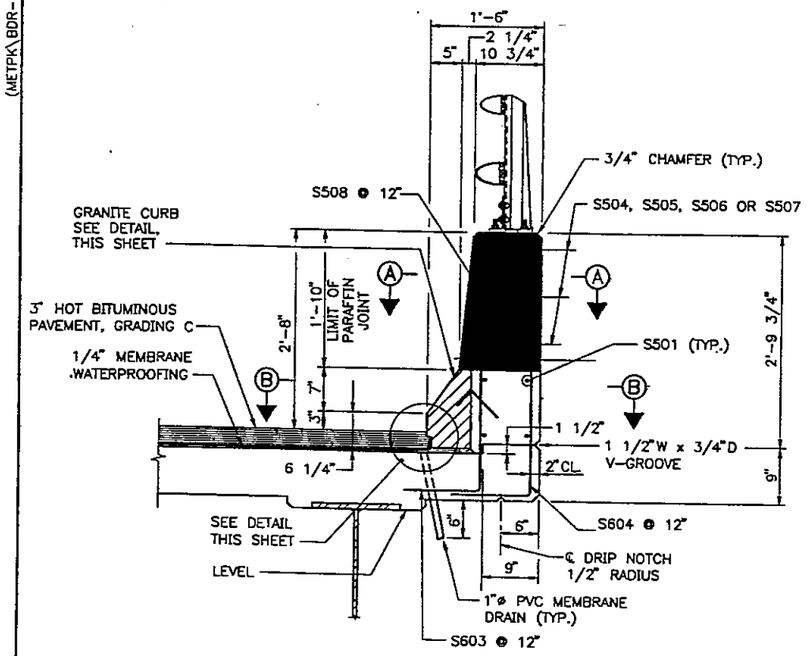

PARAPET DETAIL
1"=1'-0"

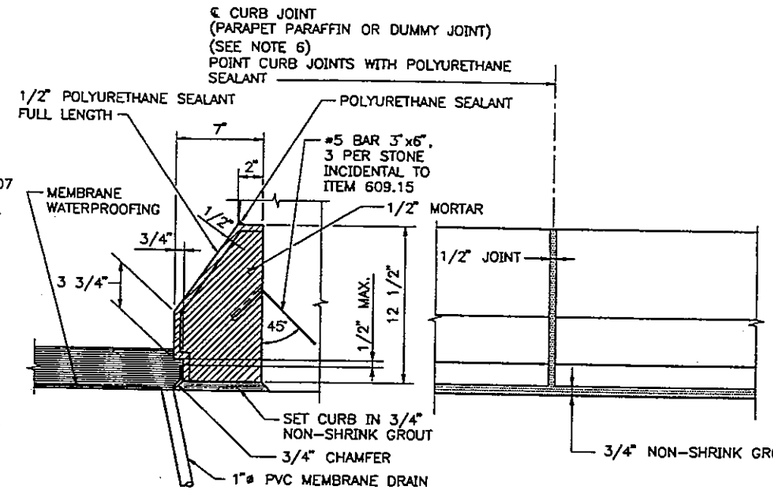

GRANITE CURB DETAIL
2"=1'-0"

BRIDGE CURB ELEVATION
2"=1'-0"

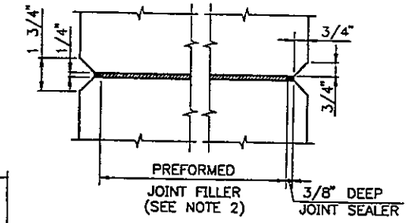

SECTION A-A
3"=1'-0"

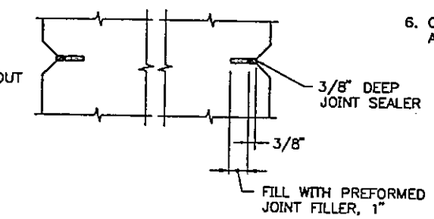

SECTION B-B
3"=1'-0"

PARAFFIN AND DUMMY JOINT NOTES

1. CONCRETE SHALL BE PLACED SIMULTANEOUSLY ON BOTH SIDES OF JOINT.
2. PREFORMED JOINT FILLER SHALL CONFORM TO ASTM DESIGNATION D1751.
3. SECTION B-B ALSO APPLIES TO DUMMY JOINT LOCATIONS.
4. JOINT SEALER SHALL BE SIKAFLEX 1A.
5. PREFORMED JOINT FILLER AND JOINT SEALER SHALL BE INCIDENTAL TO ITEM 502.261, STRUCTURAL CONCRETE ROADWAY AND PARAPETS ON STEEL BRIDGES.
6. CURB JOINTS SHALL BE ALIGNED WITH PARAFFIN AND DUMMY JOINTS.

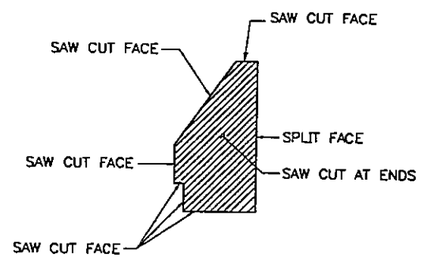

CURB CUT DETAIL
2"=1'-0"

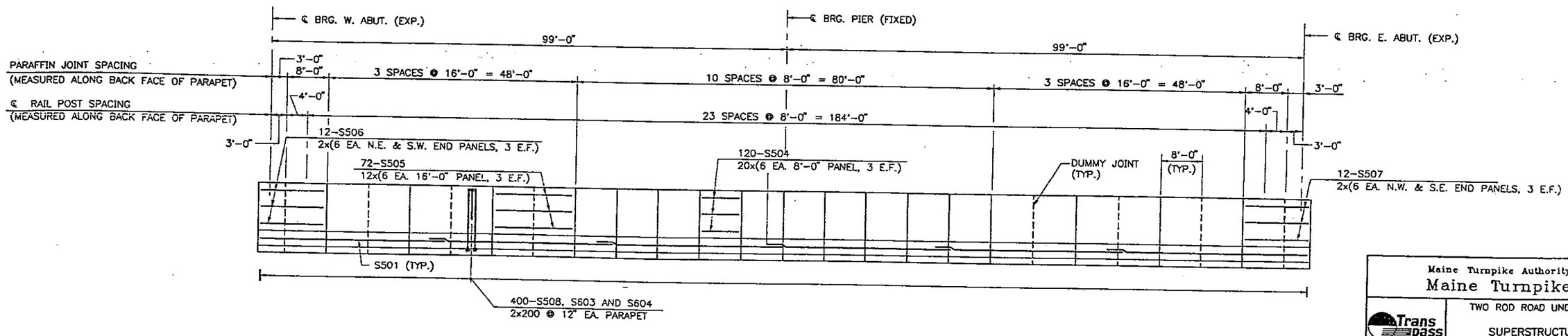

PARAPET ELEVATION
HORIZ. 1"=10'
VERT. 1"=2'

No.	Revision	By	Date		By	Date
				Designed	AD	6/98
				Drawn	LS	6/98
				Checked	CC	6/98
				In Charge Of:	RAL	

Maine Turnpike Authority
Maine Turnpike

Trans pass

TWO ROD ROAD UNDERPASS

SUPERSTRUCTURE DETAILS II

HNTB
ARCHITECTS ENGINEERS PLANNERS

Contract 98.5

Sheet No. TR-22
64 of 88

(METPK\BDR-01)

M:\B09009XW\958\050\TROD-21.DWG 06/01/98 09:51

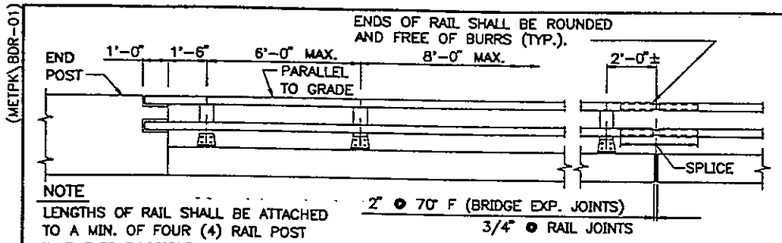

NOTE
LENGTHS OF RAIL SHALL BE ATTACHED TO A MIN. OF FOUR (4) RAIL POST WHENEVER POSSIBLE, AND IN ANY CASE NEVER LESS THAN TWO (2). RAIL POST ARE TO BE SET NORMAL TO GRADE UNLESS OTHERWISE SHOWN ON THE BRIDGE PLANS.

RAILING – ELEVATION
3/8"=1'-0"

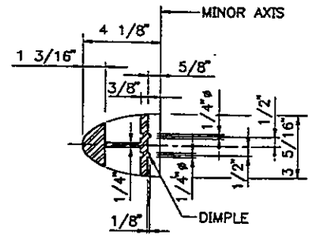

SECTION A–A (RAIL)
3"=1'-0"

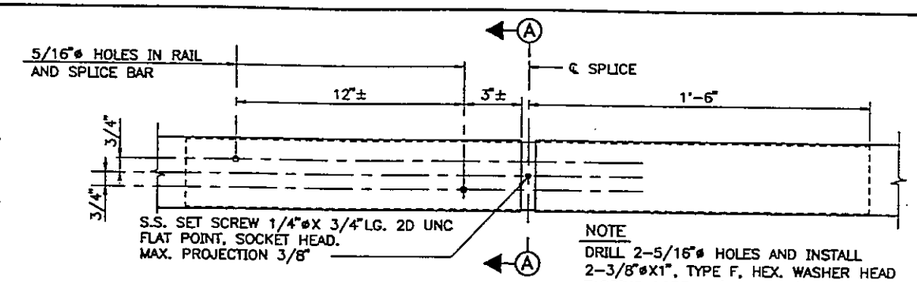

NOTE
DRILL 2–5/16"ø HOLES AND INSTALL 2–3/8"øX1", TYPE F, HEX. WASHER HEAD TAPPING SCREWS (STAINLESS).

SPLICE DETAIL
3"=1'-0"

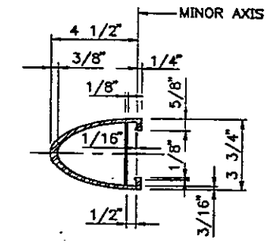

RAIL MEMBER
3"=1'-0"

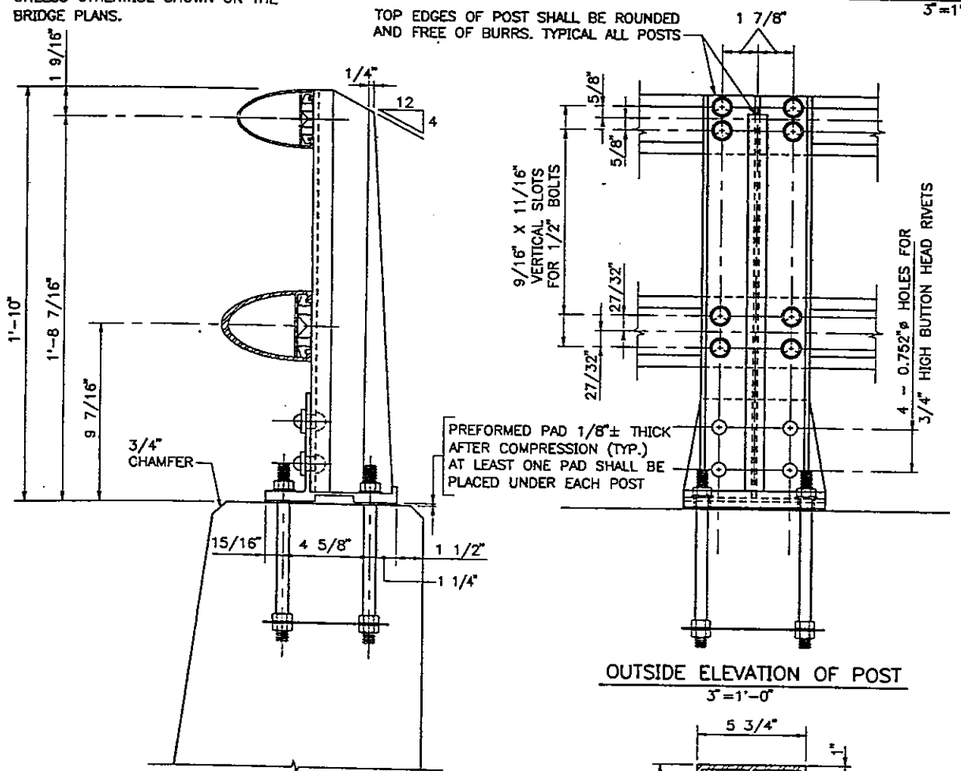

BRIDGE RAILING
(ASSEMBLY)
3"=1'-0"

OUTSIDE ELEVATION OF POST
3"=1'-0"

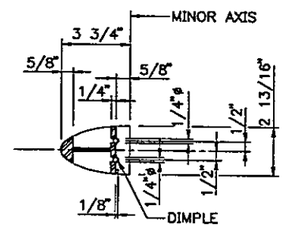

SECTION A–A (HANDRAIL)
3"=1'-0"

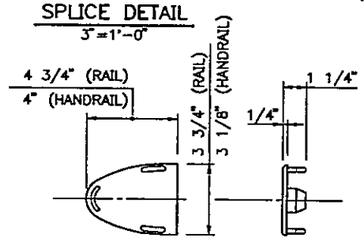

CAST ALUMINUM
DRIVE FIT RAIL CAP
3"=1'-0"

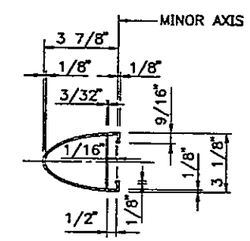

HANDRAIL MEMBER
3"=1'-0"

NOTE
- ONE–PIECE BASE PLATE MAY BE SUBSTITUTED, PROVIDED THAT THE REQUIRED LENGTH IS CUT FROM A ONE–PIECE EXTRUSION AND HAS THE GEOMETRIC SHAPE OF THE TWO–PIECE BASE PLATE

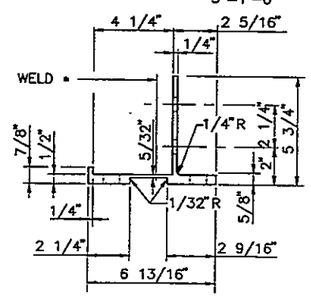

POST BASE SECTION
3"=1'-0"

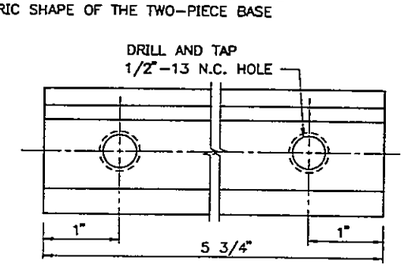

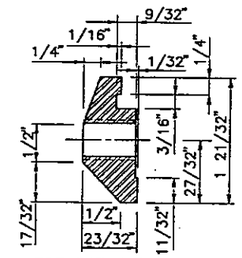

FOR RAIL MEMBER

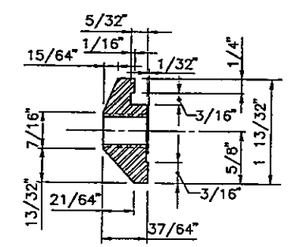

FOR HANDRAIL

CLAMP BAR DETAILS
FULL SIZE

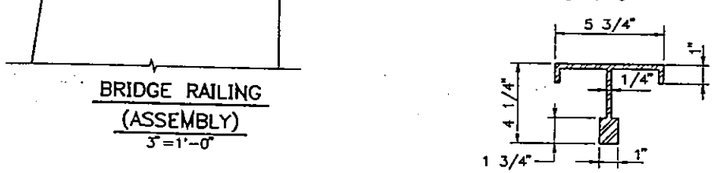

POST SECTION
3"=1'-0"

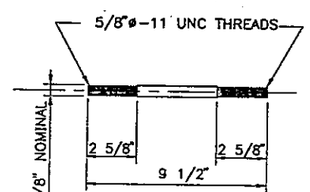

ANCHOR BOLT
3"=1'-0"

NOTE
IF CUT THREADS ARE USED, BODY DIAMETER SHALL BE NOT LESS THAN NOMINAL DIAMETER. IF ROLLED THREADS ARE USED, BODY DIAMETER SHALL BE NOT LESS THAN PITCH DIAMETER OF THE THREADS.

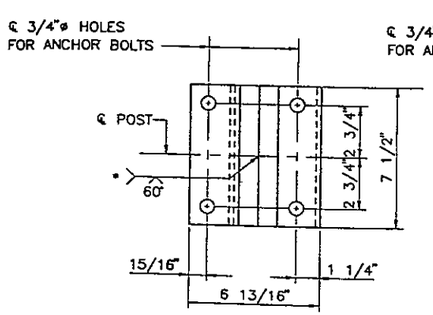

POST BASE
(BOTTOM VIEW)
3"=1'-0"

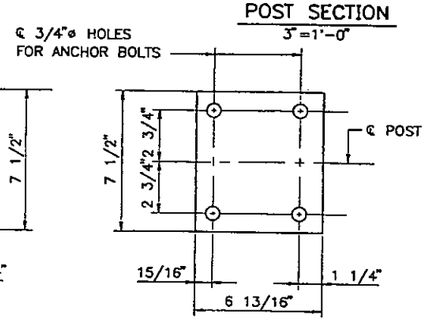

PREFORMED PAD
3"=1'-0"

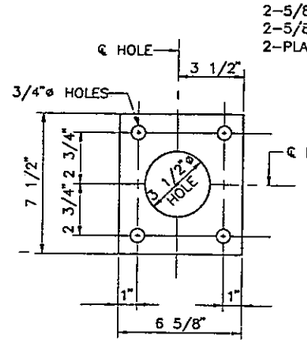

STEEL SPACER PLATE
(FOR ANCHORAGE)
3"=1'-0"

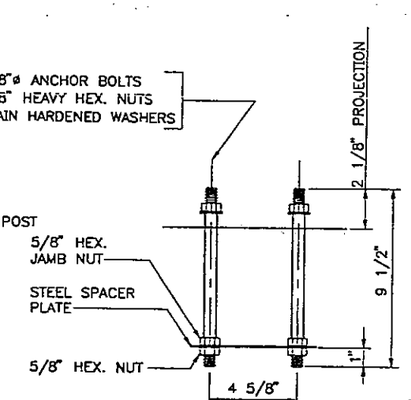

RAIL POST ANCHORAGE
(ASSEMBLY)
3"=1'-0"

NOTE
FOUR (4) BOLT, NUT AND WASHER SETS ARE REQUIRED PER ASSEMBLY. ALL HARDWARE AND ANCHOR BOLTS SHALL BE GALVANIZED.

No.	Revision	By	Date		By	Date
				Designed	AD	6/98
				Drawn	LS	6/98
				Checked	HNL	6/98
				In Charge Of	RAL	

Maine Turnpike Authority
Maine Turnpike

Trans pass

TWO ROD ROAD UNDERPASS

ALUMINUM BRIDGE RAIL DETAILS

HNTB
ARCHITECTS ENGINEERS PLANNERS

Contract 98.5

Sheet No. TR–24
66 of 88

M:\B09009XW\958\050\TROD-23.DWG 06/01/98 09:35

(METPK\BDR-01)

CUMMINGS ROAD UNDERPASS (MM 44.6)

3.01.03

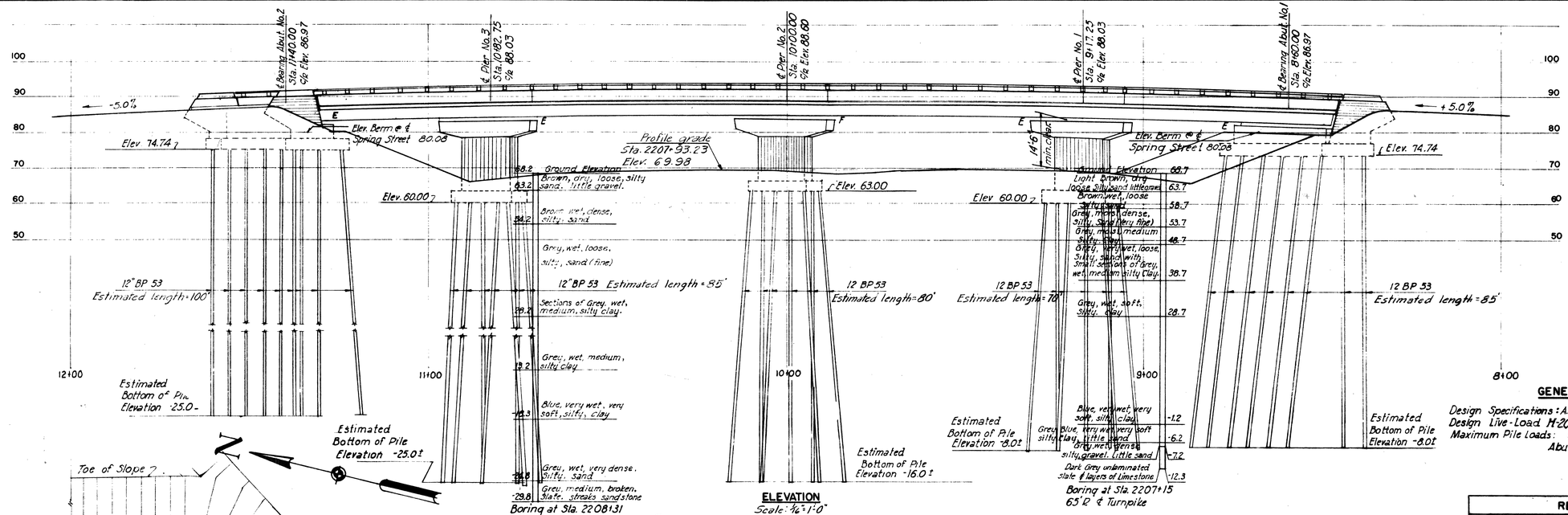

ELEVATION
Scale: 1/16" = 1'-0"

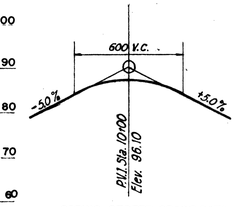

SPRING STREET GRADE DATA
No. Scale

GENERAL NOTES

Design Specifications: A.A.S.H.O (1953) with minor modifications
Design Live-Load H-20
Maximum Pile Loads: Piers, 54 tons per pile
Abutments, 31 tons per pile

REFERENCES					
Drawing Number	Title	Substruct. Configuration	Superstructure Steel Fab.	Steel Erection	Floor Deck
SD-1	Standard Abutment Details	✓	✓	✓	✓
SD-2	Standard Pier Details	✓	✓	✓	
SD-3	Abutment Drainage Details	✓			
SD-4	Standard Pile Details	✓			
SD-5	Standard Handrail, Shoes and miscellaneous Details	✓	✓	✓	✓
SD-6	Standard Diaphragm Details		✓	✓	✓
SD-10	Splices for 36" WF Beams		✓	✓	
SD-12	Roadway Expansion Joint - Type "E"	✓	✓	✓	✓
SD-13	Standard Bridge Floor Cross-Section 24' Roadway.	✓	✓	✓	✓

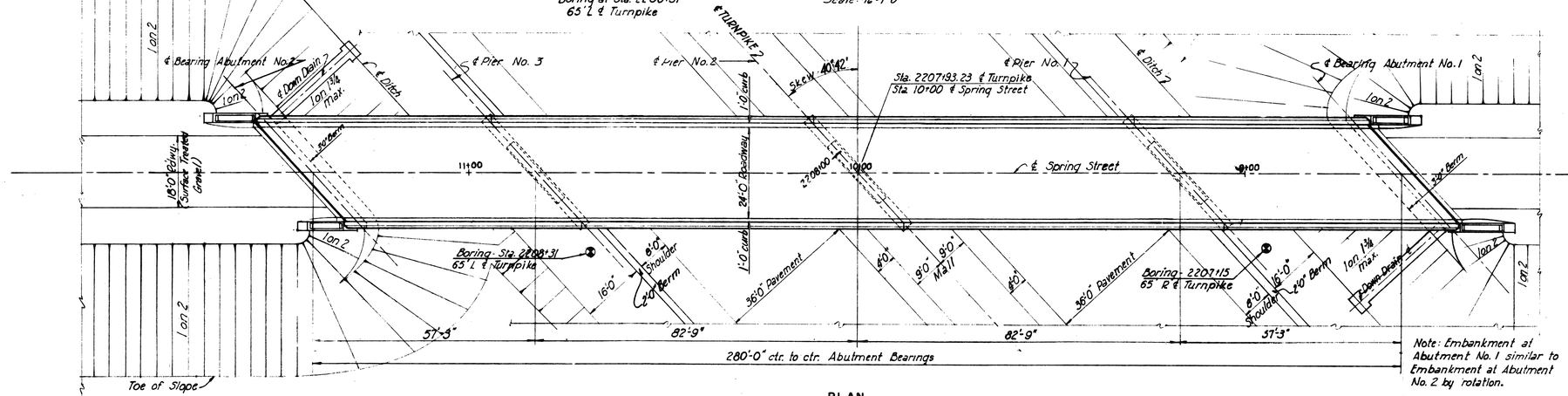

Note: Embankment at Abutment No. 1 similar to Embankment at Abutment No. 2 by rotation.

PLAN
Scale: 1/16" = 1'-0"

VICINITY MAP
Scale 1" = 1 mile

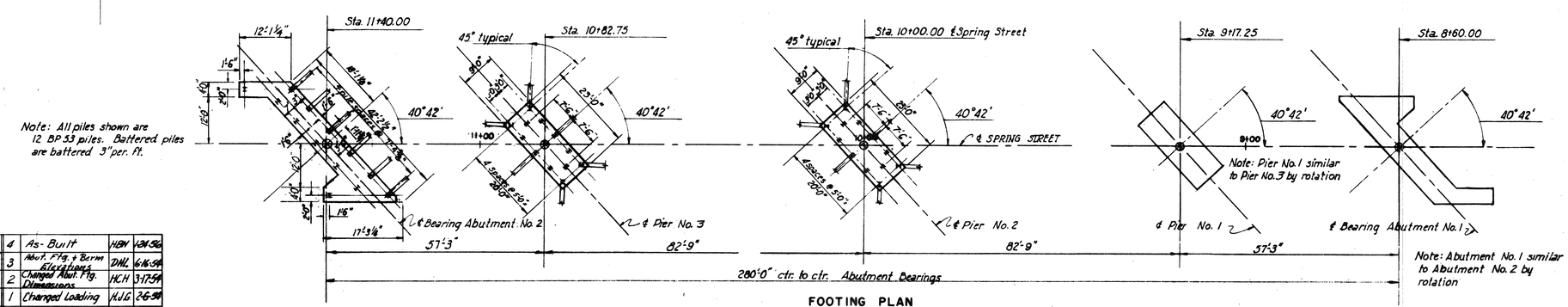

Note: All piles shown are 12 BP 53 piles. Battered piles are battered 3" per ft.

Note: Pier No. 1 similar to Pier No. 3 by rotation

Note: Abutment No. 1 similar to Abutment No. 2 by rotation

FOOTING PLAN
Scale: 1/16" = 1'-0"

DRAWING 3.01.03	BY	DATE	No.	REVISION	BY	DATE
			4	As-Built	HBV	1-24-56
MADE	L.L.D	11-14-53	3	Abut. Ftg. & Berm Elevations	DHL	6-16-54
TRACED			2	Changed Abut. Ftg. Dimensions	HCH	3-17-54
CHECKED	HJG	11-24-53	1	Changed Loading	HJG	2-6-54
IN CHARGE OF	I.D.S.K.					

MAINE TURNPIKE AUTHORITY

MAINE TURNPIKE

SECTION 2— PORTLAND TO AUGUSTA

STRUCTURE NO. 3 TURNPIKE UNDER
SPRING STREET
STA. 2208 + 93.23
GENERAL PLAN AND ELEVATION

HOWARD, NEEDLES, TAMMEN & BERGENDOFF
CONSULTING ENGINEERS
NEW YORK KANSAS CITY

SCALE: as Shown
CONTRACT NO.
SHEET NO. 39 OF 382

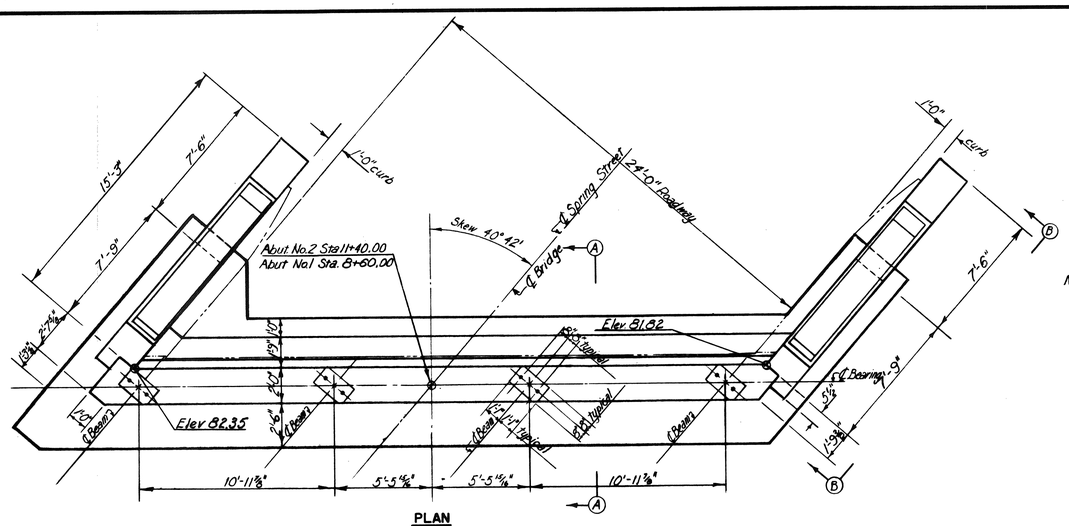

PLAN

Note: At Abutments 1 and 2 and Piers 1 and 3 clip the south-east and north-west corners of shoe masonry plates as shown on Standard Drawing No. 5

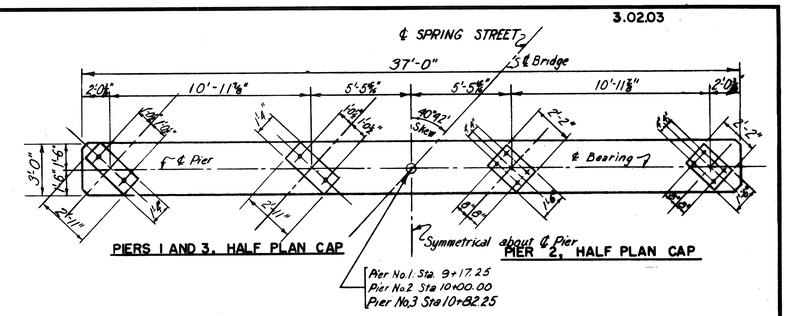

PIERS 1 AND 3, HALF PLAN CAP

PIER 2, HALF PLAN CAP

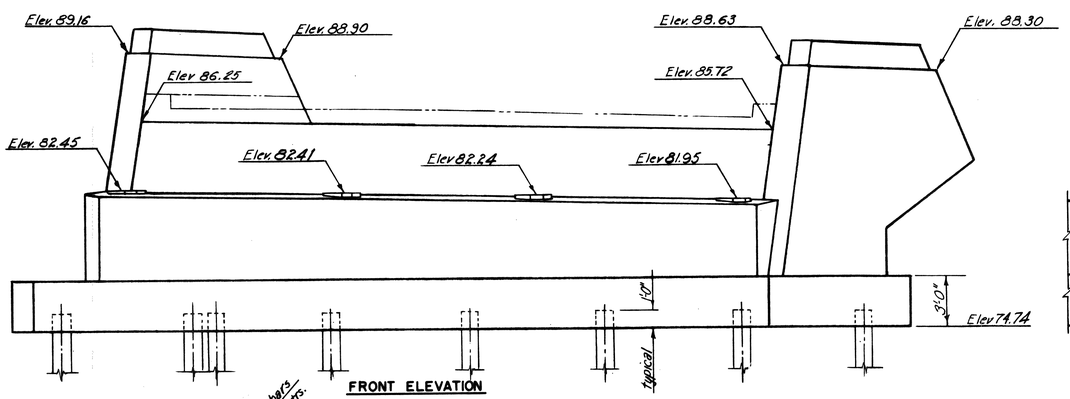

FRONT ELEVATION

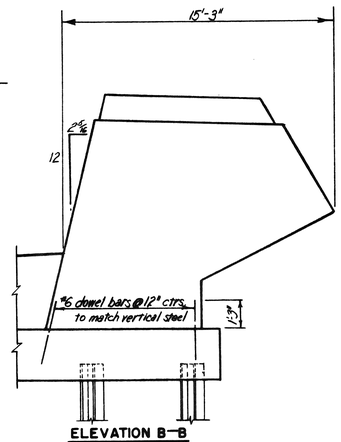

ELEVATION B—B

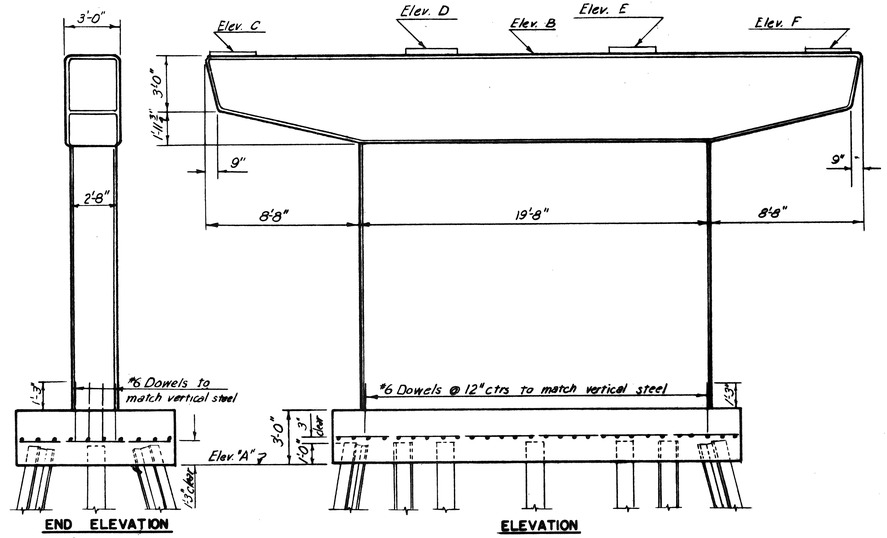

END ELEVATION

ELEVATION

ELEVATIONS			
Elev.	Pier No.1	Pier No.2	Pier No.3
A	60.00	63.00	60.00
B	82.75	83.73	82.75
C	83.07	83.75	82.77
D	83.04	83.82	82.94
E	82.94	83.82	83.04
F	82.77	83.75	83.07

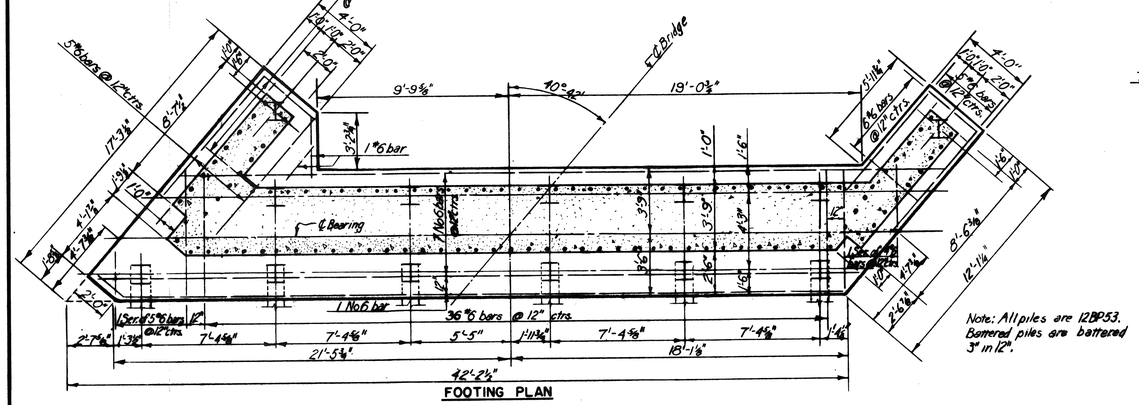

Note: All piles are 12BP53. Battered piles are battered 3" in 12".

FOOTING PLAN

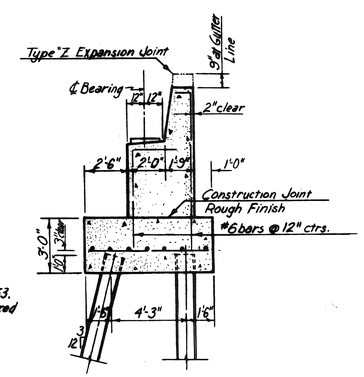

SECTION A-A

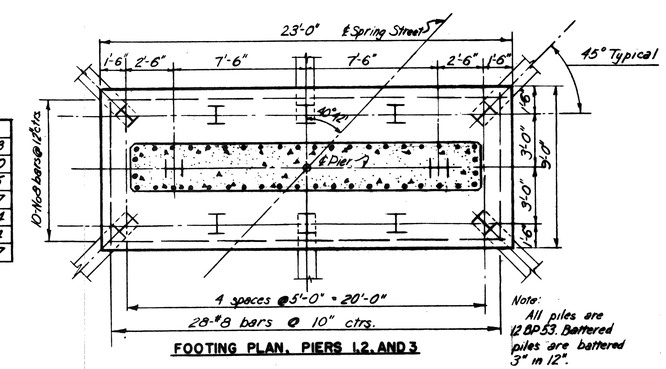

Note: All piles are 12BP53. Battered piles are battered 3" in 12".

FOOTING PLAN, PIERS 1, 2, AND 3

PIERS NO. 1, 2, AND 3

ABUTMENTS NO. 1 AND 2

DRAWING NO. 3.02.03

	BY	DATE	No.	REVISION	BY	DATE
MADE	LLD	11-18-53	3	As-Built	HBW	1-24-56
TRACED			2	Elev. change	D.H.L.	6-16-54
CHECKED	HJG	11-25-53	1	Redrew Abuts	HCH	3-17-54
IN CHARGE OF	IDSK					

MAINE TURNPIKE AUTHORITY

MAINE TURNPIKE

SECTION 2 — PORTLAND TO AUGUSTA

STRUCTURE NO. 3 TURNPIKE UNDER SPRING STREET

STA. 2207 + 98.23

SUBSTRUCTURE

HOWARD, NEEDLES, TAMMEN & BERGENDOFF

CONSULTING ENGINEERS

NEW YORK KANSAS CITY

SCALE: ¼" = 1'-0"

CONTRACT NO.

SHEET NO. 40 OF 322

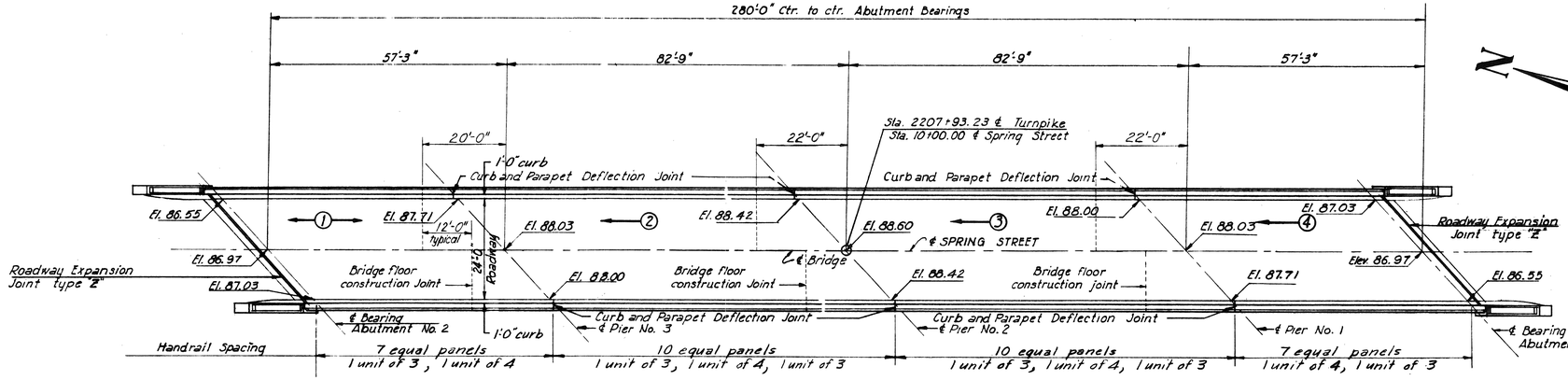

PLAN
Scale: 1/16" = 1'-0"

Notes: Use 6½" Bridge Floor with a 2" Bituminous Wearing Surface as shown on Standard Drawing No. 18 for 24'-0" Roadway, for non-composite design.

Slab pouring sequence and direction of pour is indicated by: ← (N)

Elevations shown are to top of wearing surface at ℄ Spring Street and Gutter lines at ℄ Bearings.

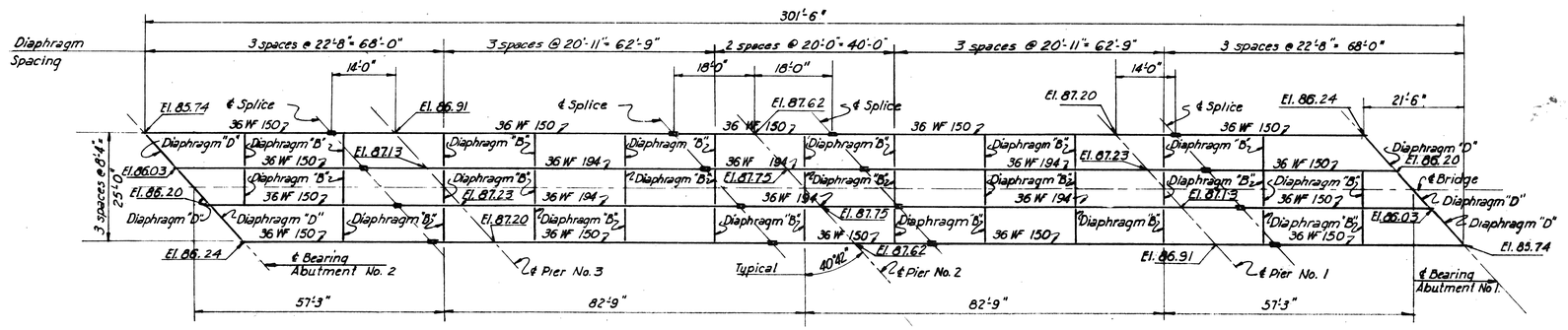

FRAMING PLAN
Scale 1/16" = 1'-0"

FRAMING NOTES

Elevations shown are to top of beam flange at the supports.

Angles noted on beam elevations are bearing stiffeners with short leg against beam web.

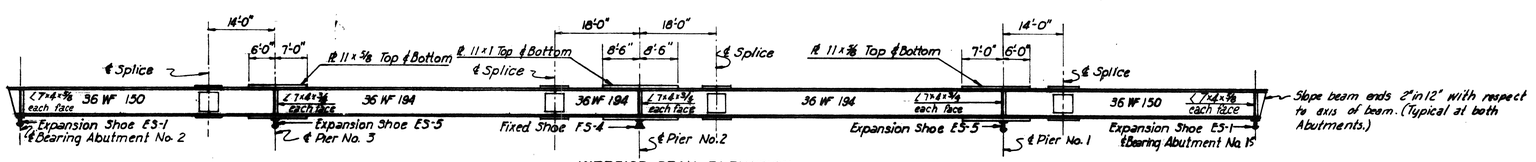

INTERIOR BEAM ELEVATION

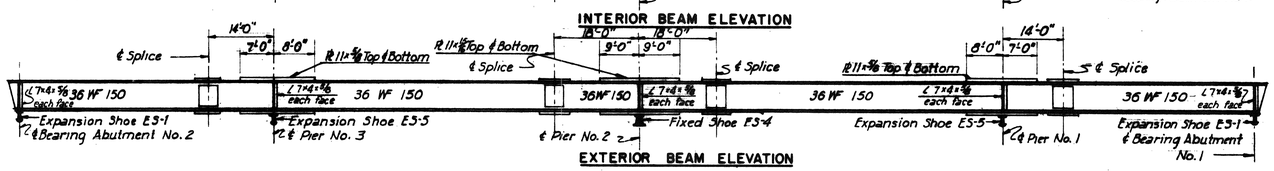

EXTERIOR BEAM ELEVATION

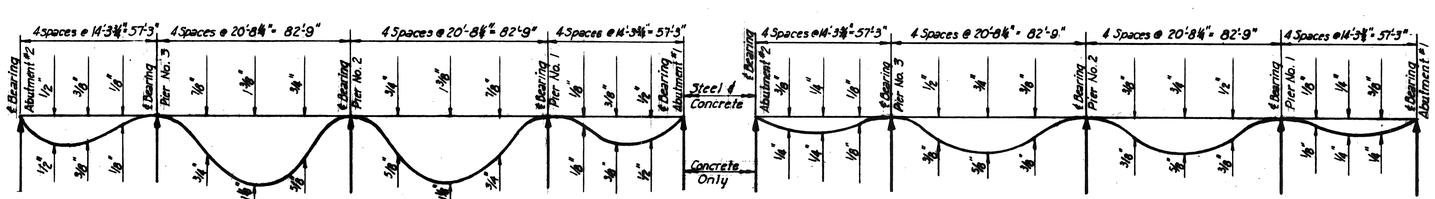

EXTERIOR BEAMS **CALCULATED DEAD LOAD DEFLECTIONS** **INTERIOR BEAMS**
No Scale

DRAWING 3. 03. 03

	BY	DATE				
MADE	LLD	11-17-53				
TRACED			2	As-Built	HBH	1-24-56
CHECKED	M.J.G.	11-25-53	1	Int. Beam Stiffener ∠	MCM	2-3-54
IN CHARGE OF	TDSK		No.	REVISION	BY	DATE

MAINE TURNPIKE AUTHORITY
MAINE TURNPIKE
SECTION 2— PORTLAND TO AUGUSTA

STRUCTURE NO. 3 TURNPIKE UNDER
SPRING STREET
STA. 2207 + 93.23
SUPERSTRUCTURE

HOWARD, NEEDLES, TAMMEN & BERGENDOFF
CONSULTING ENGINEERS
NEW YORK KANSAS CITY

SCALE: as shown
CONTRACT NO. _____
SHEET NO. 41 OF 382

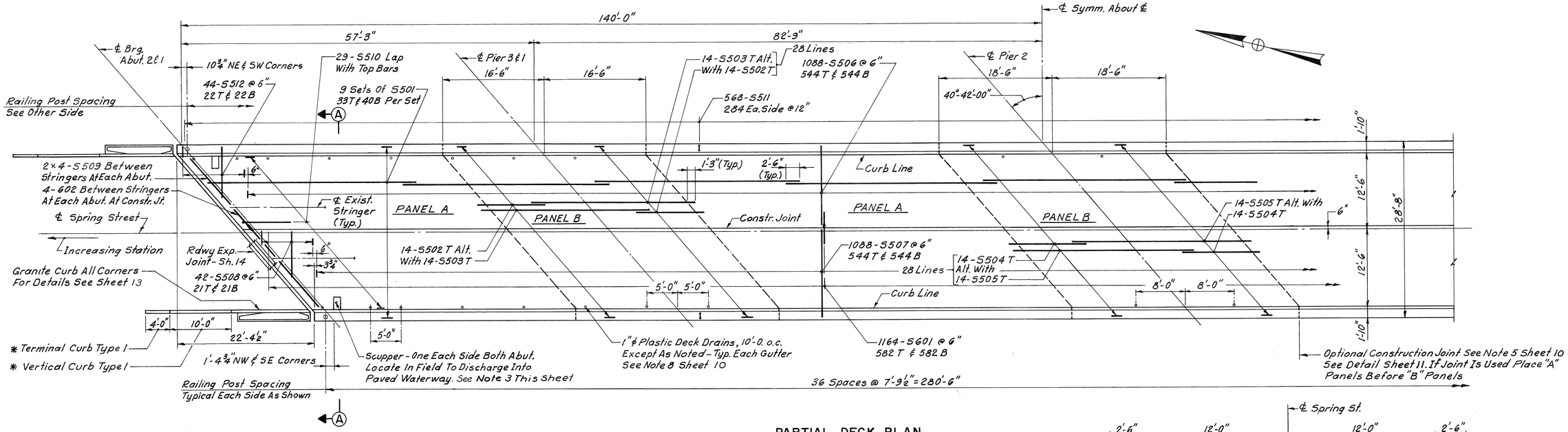

* Typical All Four Wingwalls

PARTIAL DECK PLAN

(Portion Not Shown Similar By Rotation)
1/8" = 1'-0"

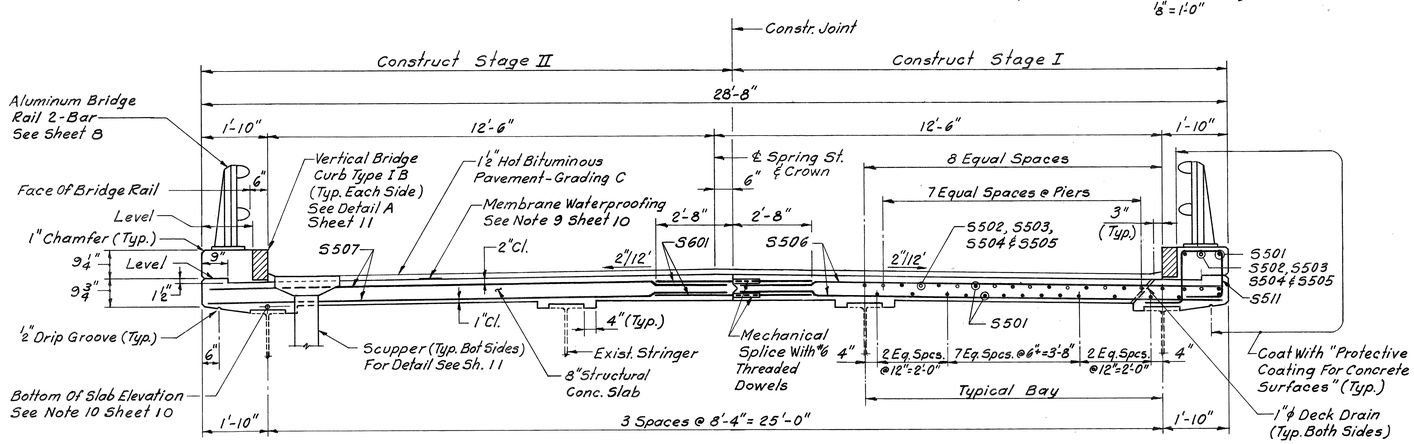

SECTION A-A

½" = 1'-0"

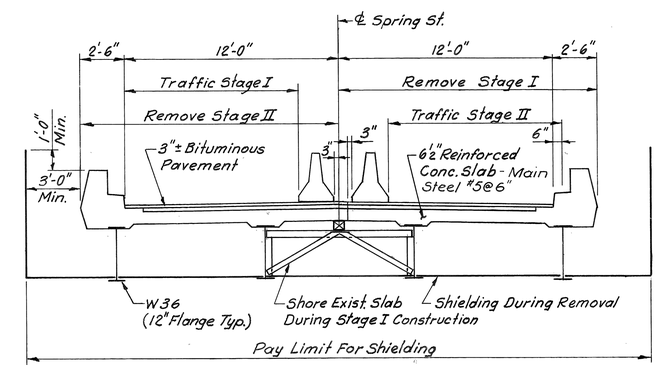

EXISTING DECK REMOVAL

No Scale

NOTES

1. Payment For Scuppers And 1" ϕ Drains Will Be Incidental To Item 502.261.
2. For General Notes See Sheet 10.
3. Adjust Reinforcing Steel To Fit Around The Scuppers In A Manner Approved By The Engineer. Do Not Cut Transverse Reinforcing Bars.

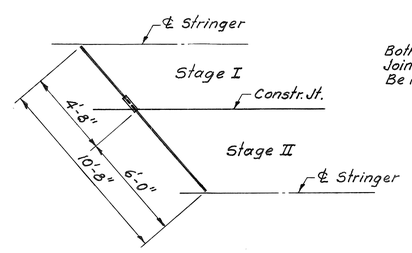

DETAIL OF S602

¼" = 1'-0"

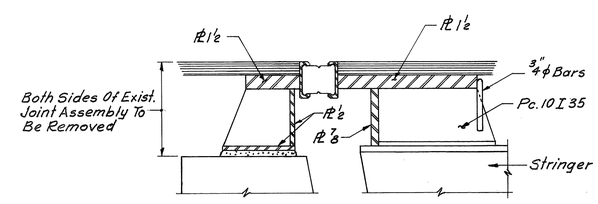

EXISTING ABUTMENT JOINT

½" = 1'-0"

NO.	REVISION	BY	DATE		BY	DATE
				DESIGNED:	T.C.G.	2/90
				DRAWN:	E.K.	2/90
				CHECKED:	I.S.	2/90
				IN CHARGE OF	R.A.L.	

MAINE TURNPIKE AUTHORITY

MAINE TURNPIKE

SPRING STREET DECK REINFORCING

HOWARD, NEEDLES, TAMMEN & BERGENDOFF
ARCHITECTS ENGINEERS PLANNERS
BOSTON

SCALE: AS NOTED

SHEET NO. 12

MILLER REPROGRAPHICS CO., INC 134427

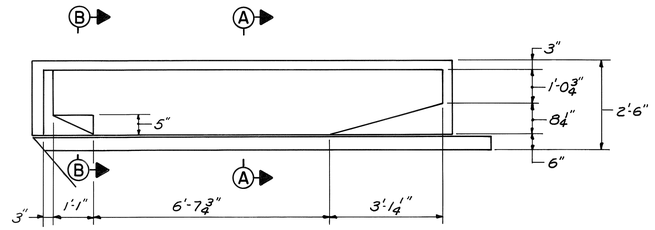

PLAN

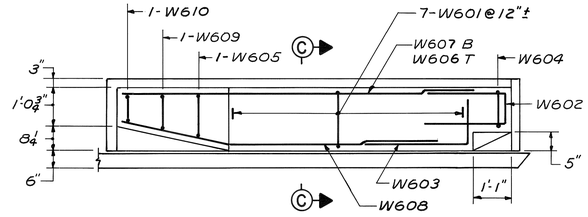

PLAN
½" = 1'-0"

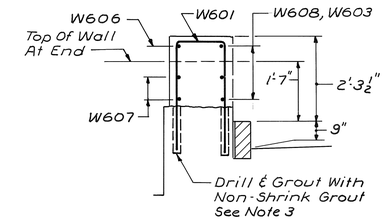

SECTION C-C
½" = 1'-0"

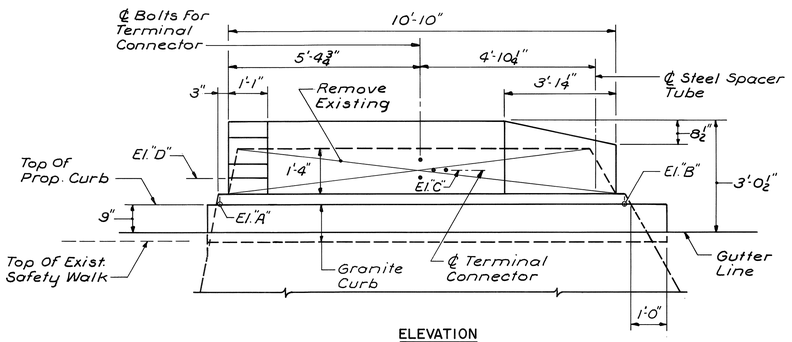

ELEVATION

WINGWALL MODIFICATION
½" = 1'-0"

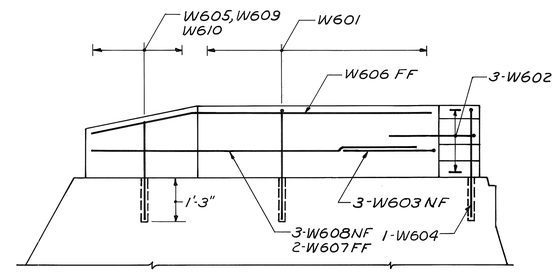

ELEVATION
½" = 1'-0"

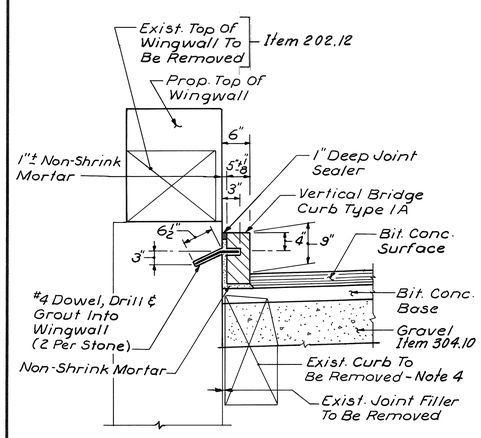

SECTION A-A
¾" = 1'-0"

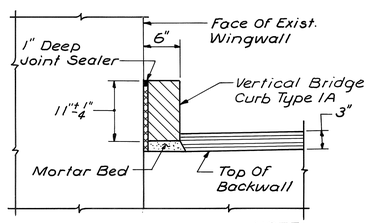

SECTION B-B
1" = 1'-0"

NOTE:
See Section A-A For Data Not Shown Or Noted.

ELEV.	WINGWALL			
	NE	NW	SE	SW
A	100.07	100.61	100.51	99.94
B	99.75	100.34	100.23	99.62
C	100.91	101.48	101.38	100.79
D	100.80	101.34	101.24	100.67

NOTES:

1. See Standard Detail Sh. BD-201-89 For Additional Details. (Sheet 9)
2. Top Of Proposed Wall To Be Constructed Parallel To Proposed Profile.
3. Payments For Drilling And Grouting To Be Incidental To Item 503.15.
4. Incidental To Contract Items.

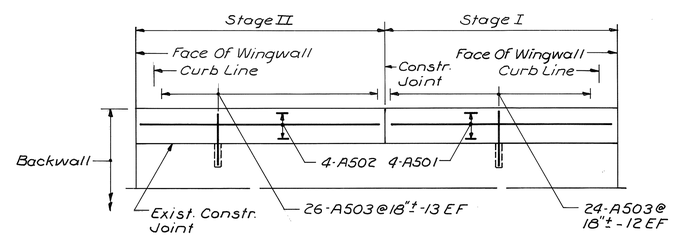

ELEVATION

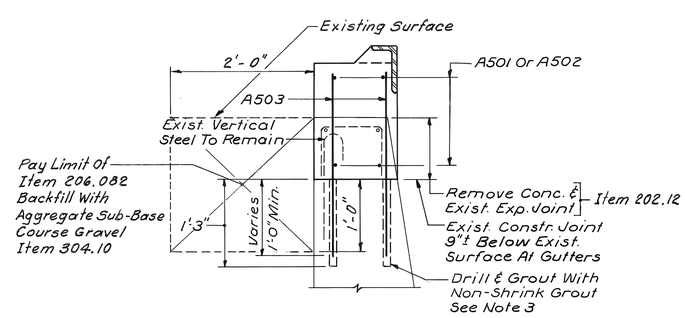

SECTION

BACKWALL MODIFICATION
No Scale

NO.	REVISION	BY	DATE

	BY	DATE
DESIGNED:	I.S.	2-90
DRAWN:	R.D.F.	2-90
CHECKED:	T.C.G.	3-90
IN CHARGE OF	R.A.L.	

MAINE TURNPIKE AUTHORITY
MAINE TURNPIKE

SPRING STREET
WINGWALL & BACKWALL MODIFICATIONS

HOWARD, NEEDLES, TAMMEN & BERGENDOFF
ARCHITECTS ENGINEERS PLANNERS
BOSTON

SCALE: AS NOTED
SHEET NO. 13

MILLER REPROGRAPHICS CO., INC. 134427

EXIT 45 UNDERPASS (MM 44.9)

MAINE TURNPIKE

MAINE TURNPIKE AUTHORITY

JULIAN R. COLES, CHAIRMAN
PATRICK F. BUTLER, VICE CHAIRMAN
LUCIEN B. GOSSELIN, MEMBER
SAMUEL M. ZAITLIN, MEMBER
EARL L. ADAMS, MEMBER
JOHN G. MELROSE, EX–OFFICIO
PAUL E. VIOLETTE, EXECUTIVE DIRECTOR

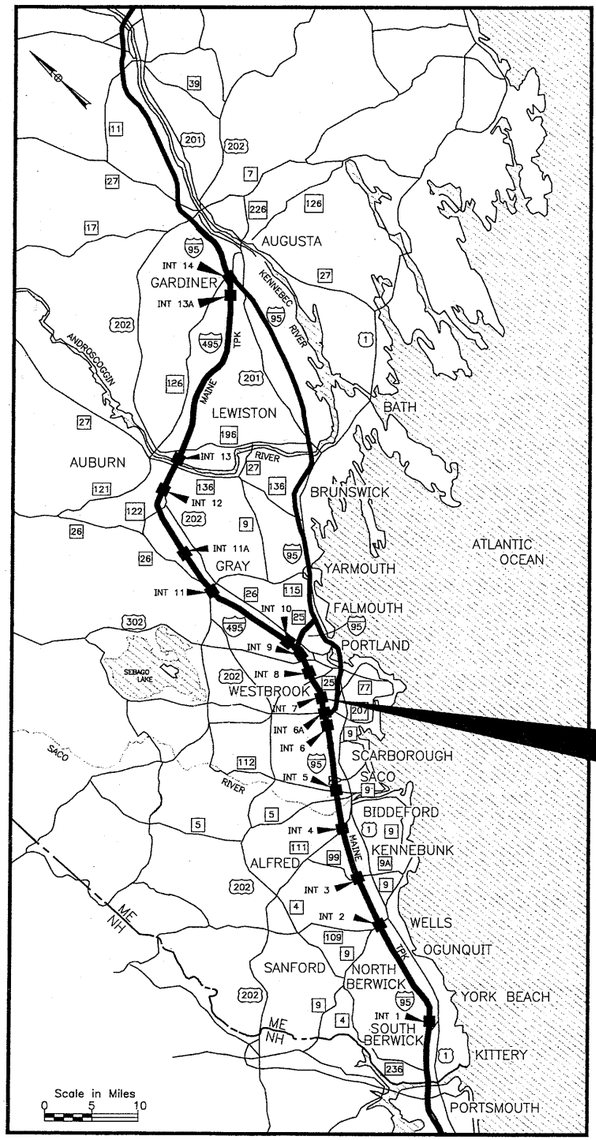

CONTRACT 2000.19
SOUTH PORTLAND INTERCHANGE
MILE 42.85

LOCATION MAP

INDEX OF SHEETS

1	TITLE SHEET
2	SPEC'S, INDEX, QUANTITIES, & NOTES
3	PROFILE
4	MAINTENANCE OF TRAFFIC I
5	MAINTENANCE OF TRAFFIC II
6	TRAFFIC SIGN SUMMARY I
7	SUPERSTRUCTURE DETAILS
8	ABUTMENT MODIFICATIONS
9	EXPANSION JOINT DETAILS I
10	EXPANSION JOINT DETAILS II
11	MISCELLANEOUS DETAILS
12	REINFORCING SCHEDULE

CONTRACT 2000.19
SOUTH PORTLAND INTERCHANGE
BRIDGE AND APPROACH REPAIRS
MILE 42.85

Contract 2000.19

HNTB
ARCHITECTS ENGINEERS PLANNERS

STATE OF MAINE
DEPARTMENT OF TRANSPORTATION

COMMISSIONER — DATE

BUREAU DIRECTOR AND CHIEF ENGINEER — DATE

STATE OF MAINE
ROLAND A. LAVALLEE
8452
REGISTERED PROFESSIONAL ENGINEER

ROLAND A. LAVALLEE P.E., PLS
VICE PRESIDENT
DIRECTOR OF OPERATIONS

DATE 11/13/00

APPROVED:
MAINE TURNPIKE AUTHORITY

CHAIRMAN

EXECUTIVE DIRECTOR

DATE

SPECIFICATIONS

DESIGN

AASHTO STANDARD SPECIFICATIONS FOR HIGHWAY BRIDGES 1992 AND INTERIM SPECIFICATIONS 1994.

CONTRACT

STATE OF MAINE, DEPARTMENT OF TRANSPORTATION, STANDARD SPECIFICATIONS, HIGHWAY AND BRIDGES, REVISION OF OCTOBER 1990.

MATERIALS

CONCRETE

ALL CONCRETE SHALL BE CLASS AAA, f'c = 4,500 P.S.I.

REINFORCING STEEL

ASTM 615 GRADE 60, (ALL BARS EPOXY–COATED)

STRUCTURAL STEEL

EXISTING STRUCTURAL STEEL IS ASTM A7, GRADE 33

GENERAL NOTES

1. PLANS OF EXISTING BRIDGES ARE AVAILABLE AT THE AUTHORITY'S OFFICE AT 430 RIVERSIDE ST., PORTLAND, MAINE.
2. REINFORCING STEEL SHALL HAVE A CLEAR COVER OF 2", UNLESS OTHERWISE NOTED.
3. ALL PROPOSED STEEL REINFORCING SHALL BE EPOXY COATED. FOR STEEL REINFORCING SCHEDULE, SEE SHEET 12.
4. CHAMFER ALL EXPOSED EDGES 3/4", UNLESS OTHERWISE NOTED.
5. SEE APPENDIX A FOR WIDE LOAD SIGNAGE PLAN. THE FINAL LOCATION SHALL BE DETERMINED IN THE FIELD BY THE ENGINEER.

ITEM NO.	DESCRIPTION	QUANTITY	UNIT
202.1271	REMOVAL OF EXISTING BITUMINOUS PAVEMENT AND MEMBRANE(770 SY)	1	LS
403.08	HOT BITUMINOUS PAVEMENT, GRADING C	270	TON
409.15	BITUMINOUS TACK COAT, APPLIED	25	GAL
419.30	SAWING BITUMINOUS PAVEMENT	50	LF
502.261	STRUCTURAL CONCRETE, HIGH EARLY STRENGTH	5	CY
502.631	BRIDGE CONCRETE REPAIRS	100	SF
504.741	GUTTER PLATE	232	LF
508.13	MEMBRANE WATERPROOFING (770 SY)	1	LS
520.21	EXPANSION DEVICE – GLAND SEAL	2	EA
526.305	CONCRETE BARRIER, SUPPLIED BY AUTHORITY	40	LF
527.102	TEMPORARY IMPACT ATTENUATOR SYSTEM – 35 MPH	2	UNIT
606.3606	GUARDRAIL REMOVE AND RESET, DOUBLE RAIL	710	LF
606.48	SINGLE GALVANIZED STEEL POST	10	EA
609.31	CURB TYPE 3	300	LF
627.861	TEMPORARY FLEXIBLE DELINEATOR POST	40	EA
632.06	BERM DROPOFF CORRECTION–GRAVEL	20	CY
652.30	FLASHING ARROW BOARD	2	EA
652.33	DRUM	85	EA
652.35	CONSTRUCTION SIGNS	850	SF
652.361	MAINTENANCE OF TRAFFIC CONTROL DEVICES	1	LS
652.38	FLAGGERS	40	MH
656.632	30" TEMPORARY SILT FENCE	100	LF
659.10	MOBILIZATION	1	LS

EASTSIDE CROSS SLOPES

−1/4"/FT	−1/8"/FT
SHOULDER	WESTBOUND ONRAMP LANE

WESTSIDE CROSS SLOPES

MATCH EXISTING SHOULDERS	MATCH EXISTING	2+00
	−0.75%	1+75
	0.00%	1+50
	+0.75%	1+25
	+1.00%	1+00
	+1.50%	0+75
	+2.50%	0+50
	MATCH EXISTING	0+30

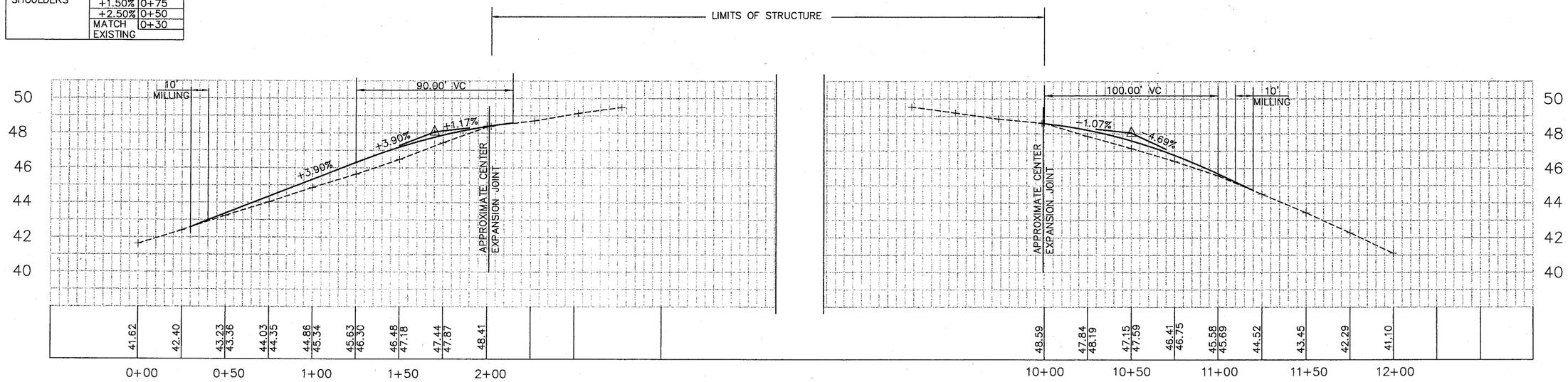

YELLOW LINE ELEVATIONS

NOTES:

1. ELEVATIONS BASED ON BENCH MARK CIRCULAR DISK LOCATED IN NORTHWEST ENDPOST. ASSUME ELEVATION 50.00.
2. ELEVATIONS WERE RECORDED AT 25 FOOT INCREMENTS ON EACH SIDE OF EAST AND WEST JOINTS ALONG THE SOLID YELLOW LINE.
3. STATIONS SHOWN ON THIS PROFILE REPRESENT THE 25 FOOT INCREMENTS AND ARE INDEPENDENT OF THE STATIONING SHOWN ON THE MAINTENANCE OF TRAFFIC.
4. THE MAXIMUM SHIM DEPTH SHALL BE 1 1/2" UNLESS OTHERWISE APPROVED BY THE ENGINEER.
5. SEE SPECIAL PROVISIONS FOR PAYMENT REGARDING OFFSET BLOCK AND GUARDRAIL REMOVAL AND RESET DURING THE PAVEMENT SHIMMING.

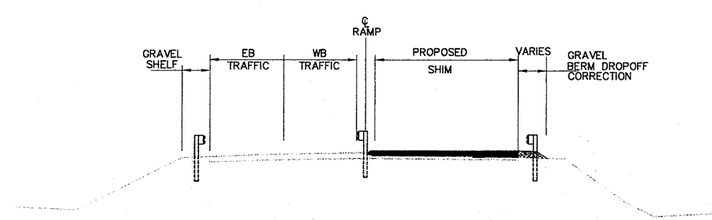

PROPOSED SHIM CONDITIONS

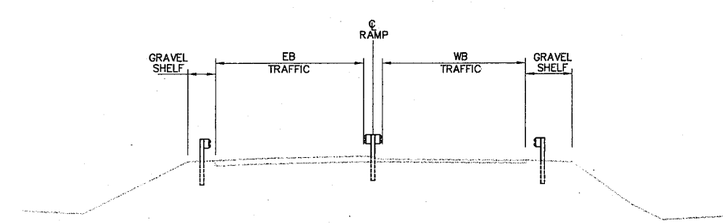

EXISTING CONDITIONS

Scale:
HORIZONTAL SCALE 1" = 30'
VERTICAL SCALE 1" = 3'

No.	Revision	By	Date

Designed by:

HNTB
ARCHITECTS ENGINEERS PLANNERS

	By	Date		By	Date
Designed	JRL	11/00	Checked	CAH	11/00
Drawn	JRL	11/00	In Charge of	RAL	11/00

HNTB CORPORATION
2 Thomas Drive
Westbrook, ME 04092
TEL (207) 774-5155
FAX (207) 772-7410

MAINE TURNPIKE AUTHORITY

MAINE TURNPIKE Trans pass

SOUTH PORTLAND INTERCHANGE BRIDGE
PROFILE

CONTRACT: 2000.19

SHEET NUMBER: 3 OF 12

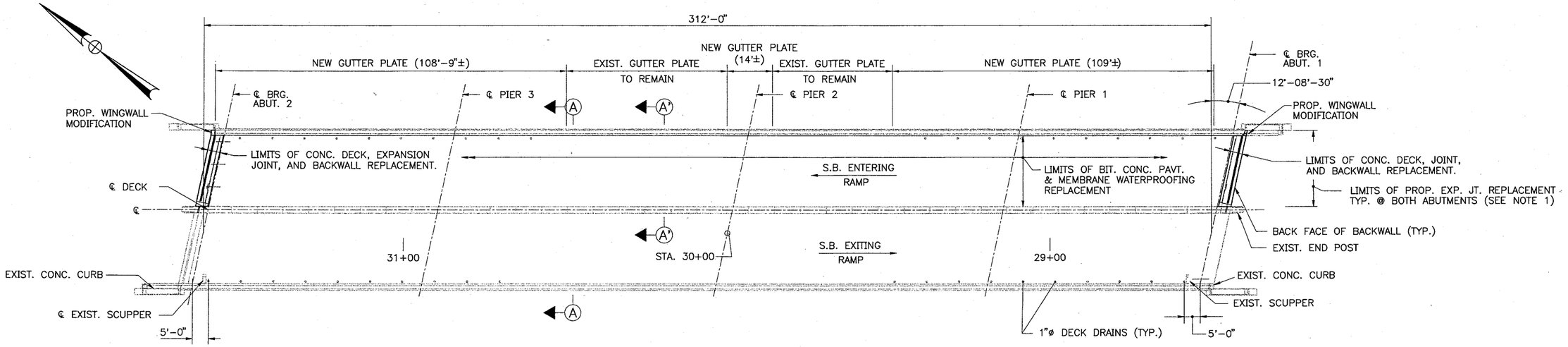

DECK PLAN
1/16"=1'-0"

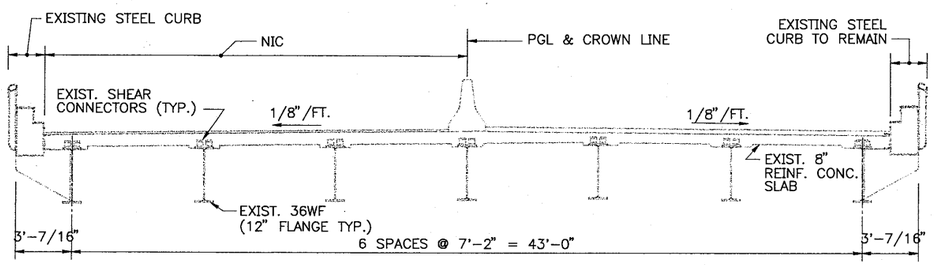

SECTION A–A – EXISTING
1/4"=1'-0"

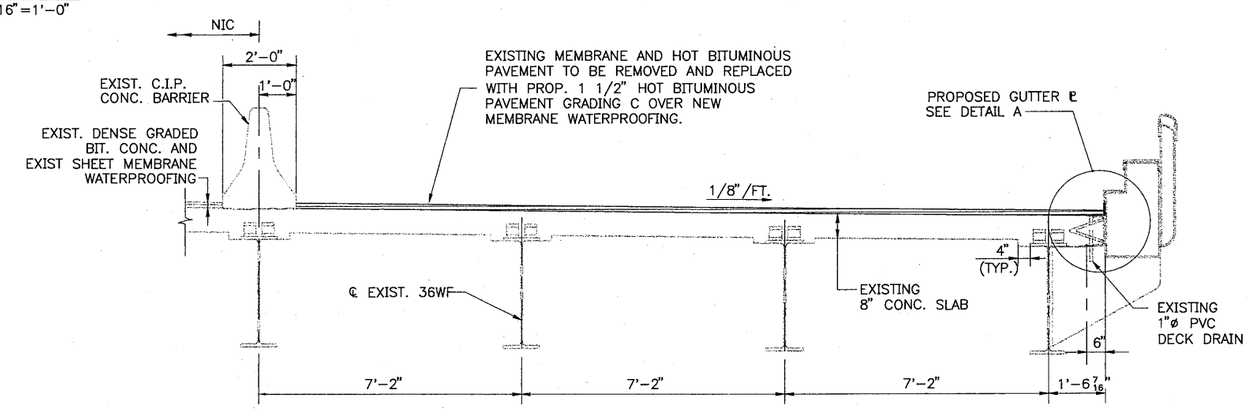

SECTION A'–A' – PROPOSED
1/2"=1'-0"

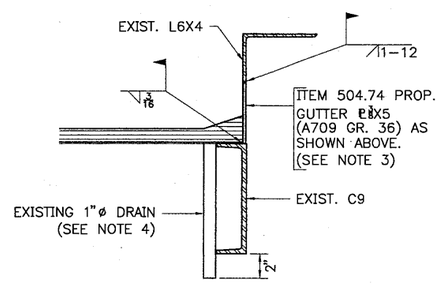

DETAIL A
2"=1'-0"

NOTES

1. FOR PROPOSED EXP. JT. REPLACEMENT, SEE SHT. 9, 10, & 11.
2. FOR PROPOSED WINGWALL MODIFICATION, SEE SHT. 11.
3. WORK UNDER ITEM 504.74 CONSISTS OF PROVIDING THE MATERIALS, LABOR AND EQUIPMENT NECESSARY TO REMOVE ANY EXISTING STEEL PLATES OR ANGLES FROM THE FLANGE OF THE C9, PREPARING THE C9 FLANGE FOR WELDING, AND FURNISHING AND INSTALLING THE PROPOSED GUTTER PLATE. ALL WORK SHALL CONFORM TO THE APPLICABLE REQUIREMENTS OF SECTION 504.
4. DO NOT COVER DECK DRAINS WITH MEMBRANE. DEPRESS DRAINS ½" BELOW TOP OF SLAB. PROVIDE 23 GAUGE GALVANIZED SCREENS (1/8" MESH) OVER DRAINS.

Scale: AS NOTED

No.	Revision	By	Date

Designed by:

HNTB
ARCHITECTS ENGINEERS PLANNERS

	By	Date		By	Date
Designed	TRC	11/00	Checked	JRL	11/00
Drawn	TRC	11/00	In Charge of	RAL	11/00

HNTB CORPORATION
2 Thomas Drive
Westbrook, ME 04092
TEL (207) 774-5155
FAX (207) 772-7410

MAINE TURNPIKE AUTHORITY

MAINE TURNPIKE Trans pass

SOUTH PORTLAND INTERCHANGE BRIDGE

SUPERSTRUCTURE DETAILS

SHEET NUMBER:
CONTRACT: 2000.19
7 OF 12

H:\2000003\X9359-013\PLOTS\FINAL PLANS\SHT07A.DWG 11/20/00 09:22

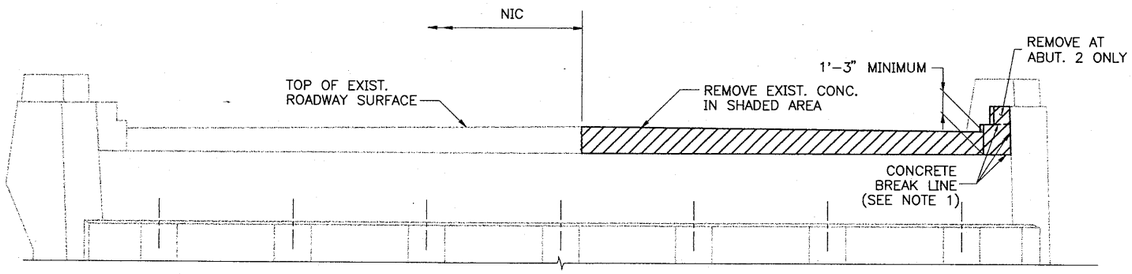

EXISTING ELEVATION
ABUTMENT NO.2
1/4"=1'-0"

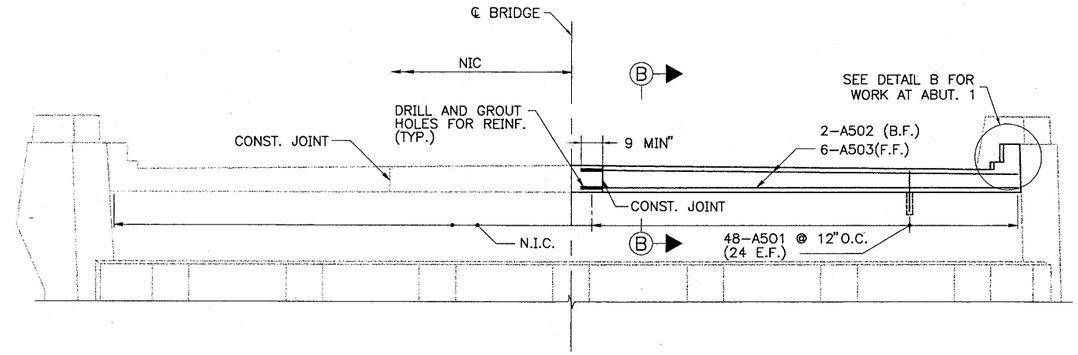

PROPOSED ELEVATION
(ABUTMENT NO.2 SHOWN, ABUTMENT NO.1 SIMILAR BUT OPPOSITE HAND)
1/4"=1'-0"

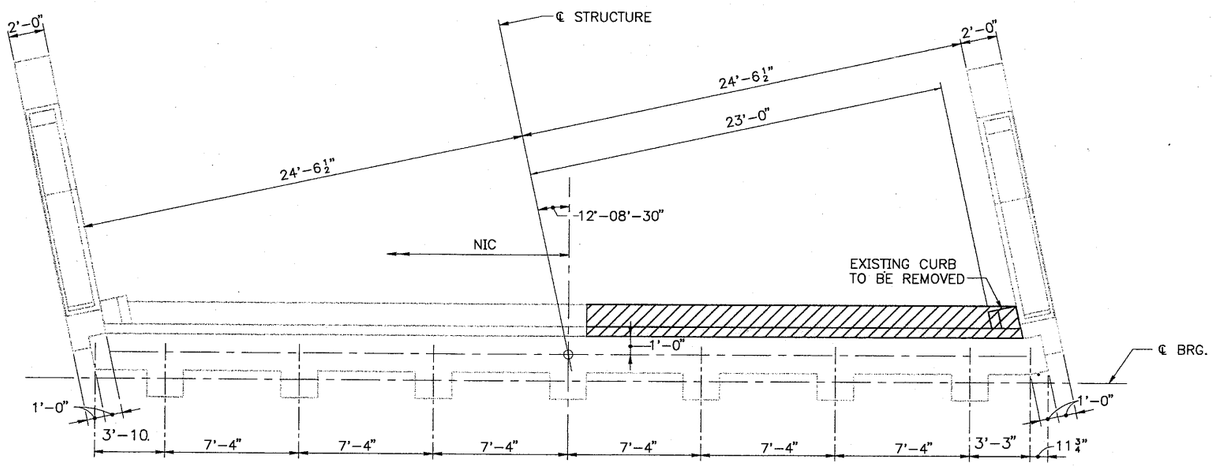

EXISTING PLAN
ABUTMENT NO.2
1/4"=1'-0"

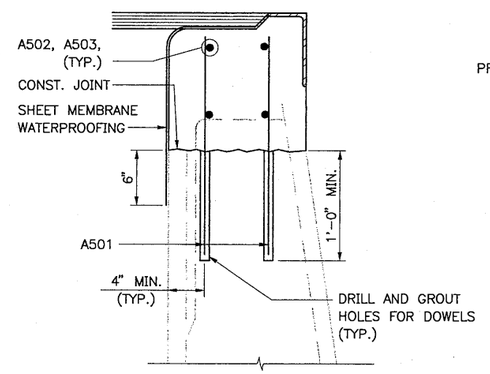

SECTION B-B
1 1/2"=1'-0"

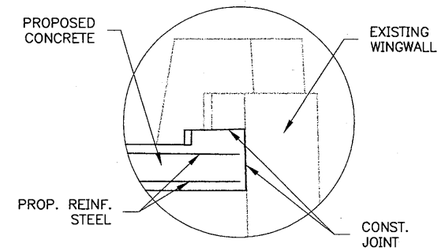

DETAIL B
1/4"=1'-0"

NOTES

1. SAW CUT 1" MIN. DEEP BEFORE REMOVING CONCRETE.
2. FOR ROADWAY EXPANSION JOINT DETAILS, SEE SHEETS 9,10 AND 11.
3. TOP OF BACKWALL ELEVATIONS TO MEET PROPOSED ROADWAY PROFILE AS PROVIDED BY ENGINEER.

Scale:

No.	Revision	By	Date

Designed by:

HNTB
ARCHITECTS ENGINEERS PLANNERS

	By	Date		By	Date
Designed	TRC	11/00	Checked	JRL	11/00
Drawn	TRC	11/00	In Charge of	RAL	11/00

HNTB CORPORATION
2 Thomas Drive
Westbrook, ME 04092
TEL (207) 774-5155
FAX (207) 772-7410

MAINE TURNPIKE AUTHORITY

MAINE TURNPIKE Trans pass

SOUTH PORTLAND INTERCHANGE BRIDGE
ABUTMENT MODIFICATIONS

CONTRACT: 2000.19

SHEET NUMBER: 8 OF 12

H:\9500\AV\950.013\PLOTS\FINAL PLANS\SH08A.DWG 11/03/00 08:12

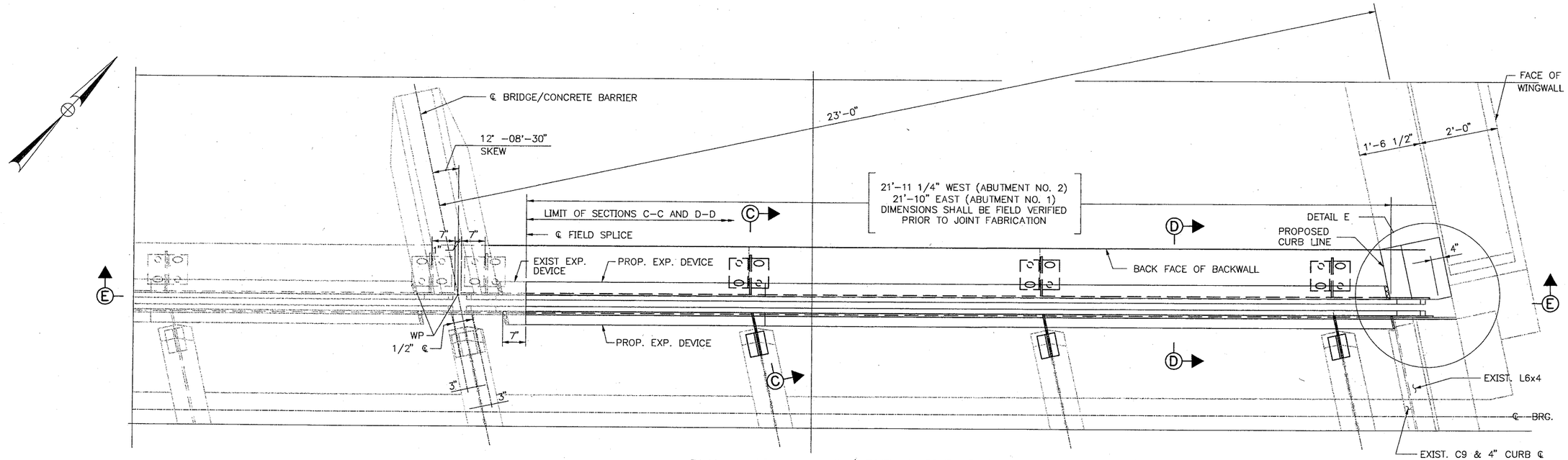

PLAN – ABUTMENT 2 (ABUT. 1 SIMILAR BUT OPPOSITE HAND)

3/4 " = 1'-0"

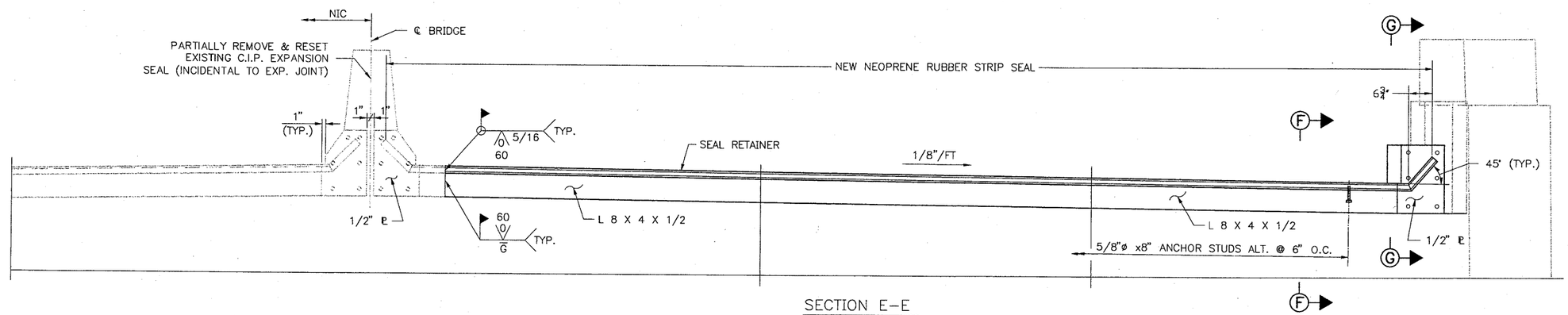

SECTION E-E

3/4 " = 1'-0"

NOTES

1. FOR SECTIONS C-C, & D-D SEE SHT. NO. 10.
2. EXPANSION JOINT AT ABUTMENT NO. 2 SHOWN, EXPANSION JOINT AT ABUTMENT NO. 1 SIMILAR BUT OPPOSITE HAND.
3. FOR SECTIONS F-F, G-G AND DETAIL E SEE SHEET NO. 11, MISCELLANEOU

H:\H0909\X\935\013\PLOTS\FINAL PLANS\SH09A.DWG 11/20/00 09:36

Scale: AS NOTED				Designed by: HNTB ARCHITECTS ENGINEERS PLANNERS						HNTB CORPORATION 2 Thomas Drive Westbrook, ME 04092 TEL (207) 774-5155 FAX (207) 772-7410	MAINE TURNPIKE AUTHORITY MAINE TURNPIKE Trans pass	SOUTH PORTLAND INTERCHANGE BRIDGE EXPANSION JOINT DETAILS I
No.	Revision	By	Date		By	Date		By	Date			SHEET NUMBER:
				Designed	TRC	11/00	Checked	JRL	11/00			CONTRACT: 2000.19 9 OF 12
				Drawn	TRC	11/00	In Charge of	RAL	11/00			

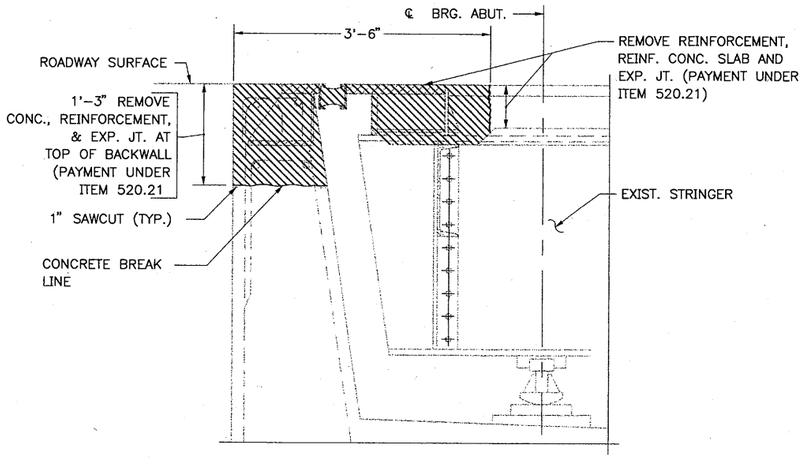

EXISTING SECTION C–C
1" = 1'-0"

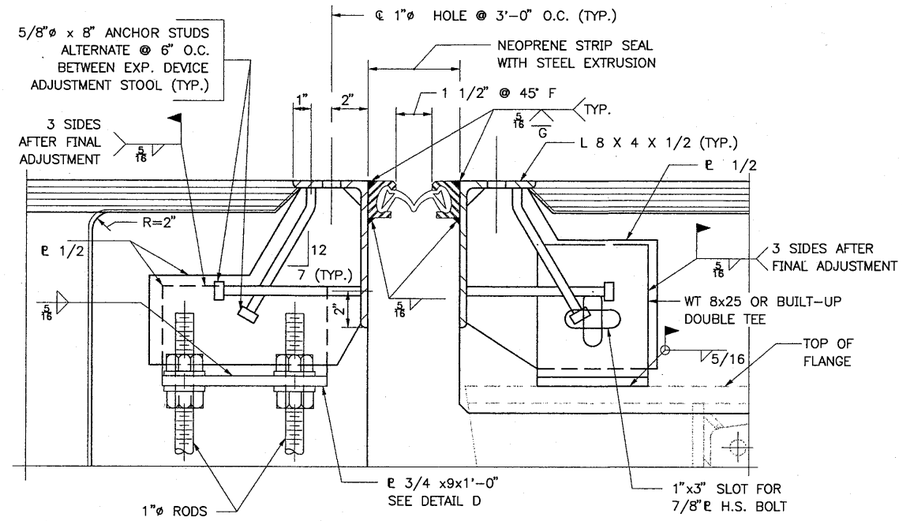

DETAIL C
3" = 1'-0"

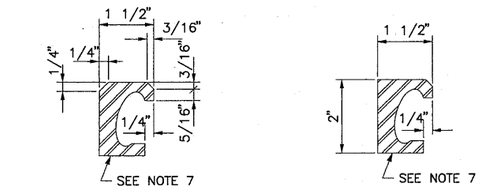

STEEL EXTRUSION FOR ROADWAY AREAS

STEEL EXTRUSION FOR OTHER AREAS

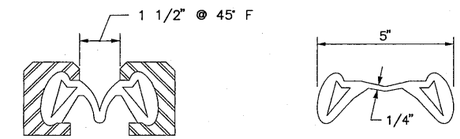

STRIP SEAL DETAILS
HALF SIZE

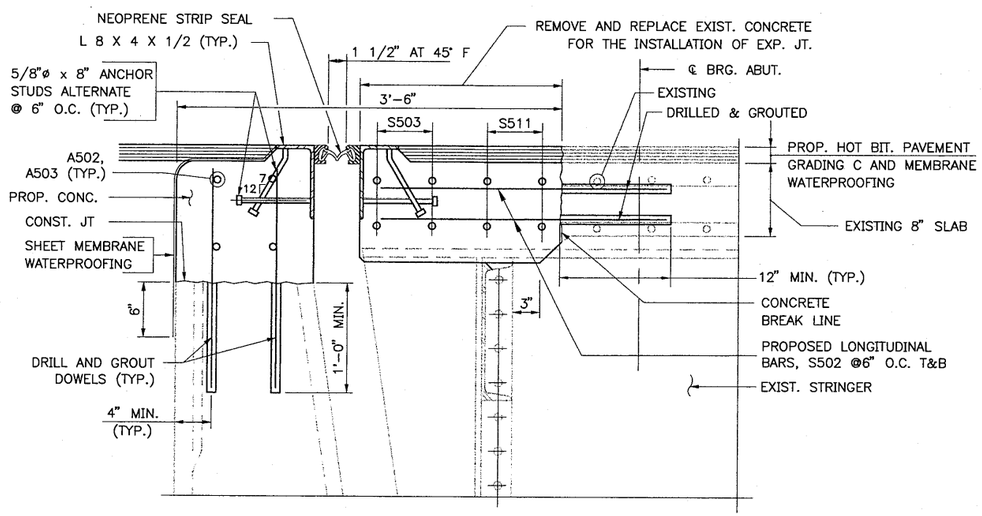

PROPOSED SECTION D–D
1 1/2 " = 1'-0"

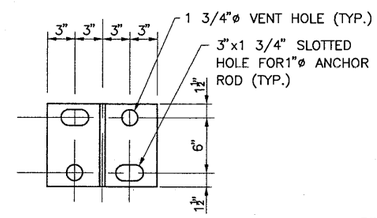

DETAIL D
1 1/2 " = 1'-0"

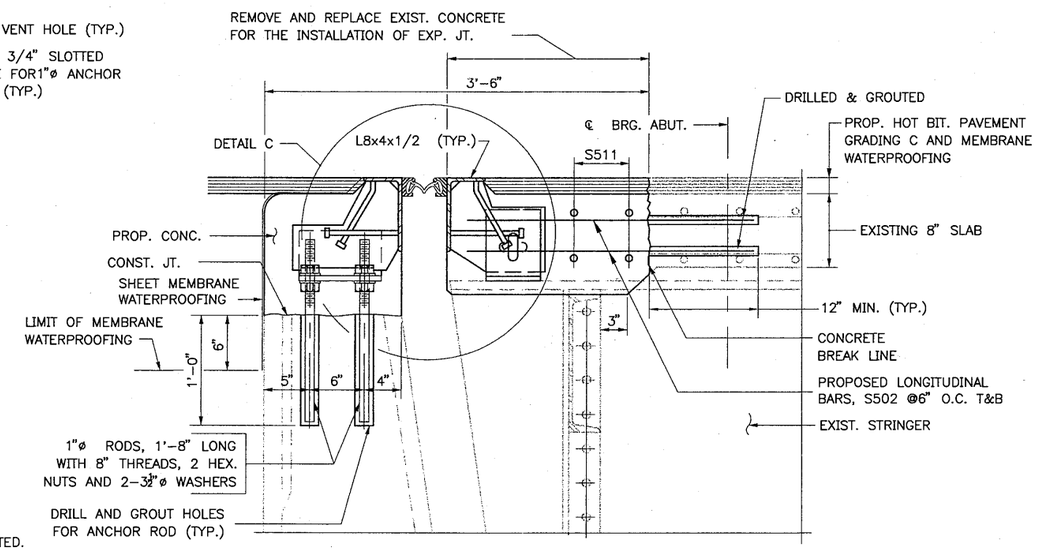

PROPOSED SECTION C–C
1 1/2 " = 1'-0"

EXPANSION DEVICE NOTES

1. SHOP DRAWINGS OF THE EXPANSION DEVICE SHALL BE SUBMITTED FOR APPROVAL OF THE ENGINEER.
2. THE EXPANSION DEVICE SHALL BE SET TO AN OPENING OF 1 1/2 INCHES IN THE FABRICATION SHOP AND SHALL BE SECURED TO THE STRINGER AND/OR BACK WALL WHEN THE AMBIENT TEMPERATURE IS BETWEEN 40° F AND 80°F. THE OPENING SHALL BE ADJUSTED TO REFLECT THE TEMPERATURE OF THE STRUCTURE AT THE TIME OF INSTALLATION. SETTING SCHEDULE FOR THE OPENING SHALL BE SUPPLIED BY THE MANUFACTURER OF THE SEAL.
3. ALL EXPOSED SURFACES OF ANGLES TO BE FIELD PAINTED.
4. ALL STEEL COMPONENTS SHALL BE ASTM A709 GR. 36, UNLESS OTHERWISE NOTED.
5. ALL WELDS ARE 5/16 " CONTINUOUS FILLETS, EXCEPT AS NOTED.
6. ALL STEEL SURFACES THAT WILL BE IMBEDDED IN CONCRETE SHALL BE COATED WITH EPOXY BONDING COMPOUND.
7. STEEL EXTRUSION SHALL BE WATSON BOWMAN ACME TYPE A STRIP SEAL STEEL EXTRUSION. NO SUBSTITUTIONS WILL BE PERMITTED.

Scale: AS NOTED

No.	Revision	By	Date

Designed by:

HNTB
ARCHITECTS ENGINEERS PLANNERS

	By	Date		By	Date
Designed	TRC	11/00	Checked	JRL	11/00
Drawn	TRC	11/00	In Charge of	RAL	11/00

HNTB CORPORATION
2 Thomas Drive
Westbrook, ME 04092
TEL (207) 774-5155
FAX (207) 772-7410

MAINE TURNPIKE AUTHORITY

MAINE TURNPIKE Trans pass

SOUTH PORTLAND INTERCHANGE BRIDGE
EXPANSION JOINT DETAILS II

CONTRACT: 2000.19

SHEET NUMBER: 10 OF 12

H:\HOBOOK\W\959\013\PLOTS\FINAL PLANS\SH10A.DWG 11/14/00 11:37

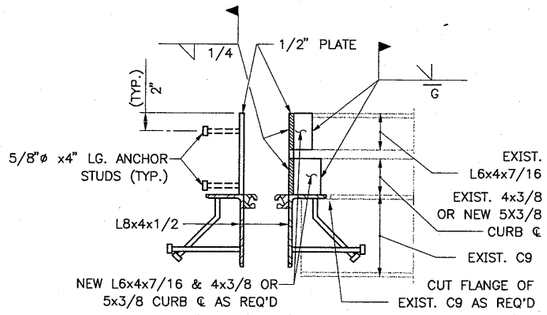

SECTION F–F (FROM SHEET NO. 9)

1 1/2 " = 1'–0"

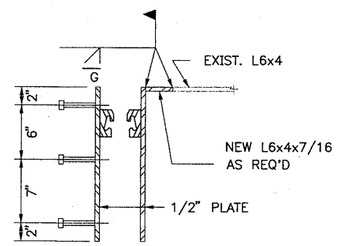

SECTION G–G (FROM SHEET NO. 9)

1 1/2 " = 1'–0"

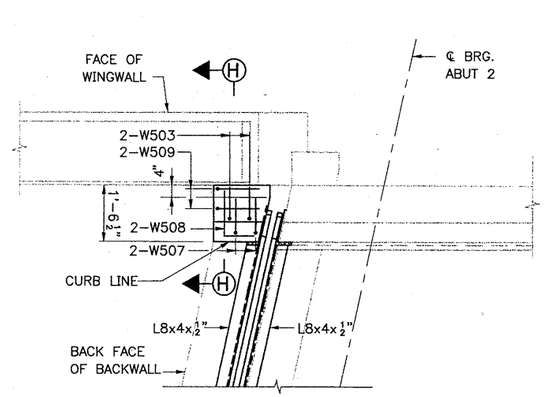

PLAN – N.W. WINGWALL

1/2"=1'–0"

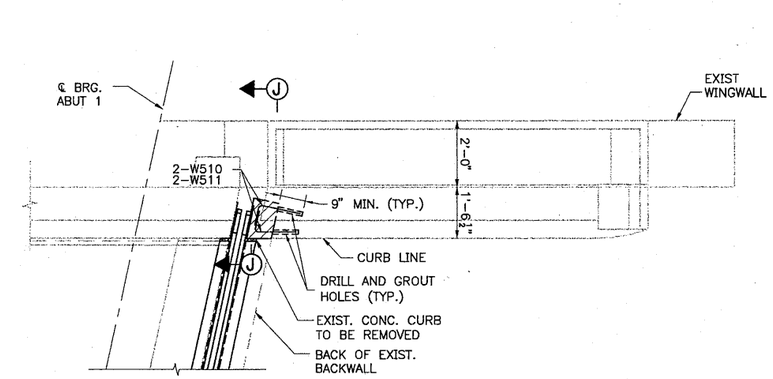

PLAN – N.E. WINGWALL

1/2"=1'–0"

SECTION H–H

1/2"=1'–0"

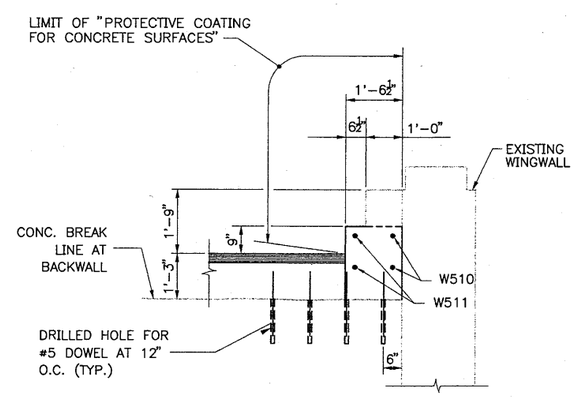

SECTION J–J

1/2"=1'–0"

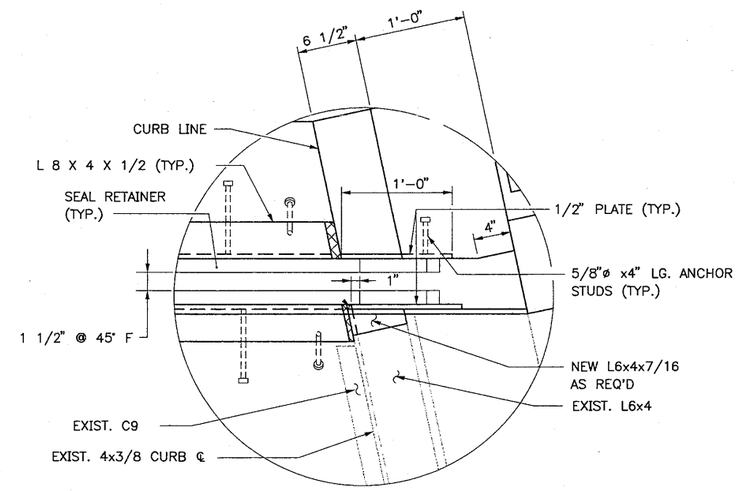

DETAIL E

1 1/2 " = 1'–0"

NOTES

1. PROTECTIVE COATING FOR CONCRETE SURFACES SHALL BE SLX100 AND INCIDENTAL TO ITEM 502.261 STRUCTURAL CONCRETE, HIGH EARLY STRENGTH.

Scale:

No.	Revision	By	Date

Designed by:

HNTB
ARCHITECTS ENGINEERS PLANNERS

	By	Date		By	Date
Designed	TRC	11/00	Checked	JRL	11/00
Drawn	TRC	11/00	In Charge of	RAL	11/00

HNTB CORPORATION
2 Thomas Drive
Westbrook, ME 04092
TEL (207) 774–5155
FAX (207) 772–7410

MAINE TURNPIKE AUTHORITY

MAINE TURNPIKE Trans pass

SOUTH PORTLAND INTERCHANGE BRIDGE
MISCELLANEOUS DETAILS

CONTRACT: 2000.19

SHEET NUMBER: 11 OF 12

H:\HG0009\W\259.013\PLOTS\FINAL PLANS\SH11A.DWG 11/14/00 11:49

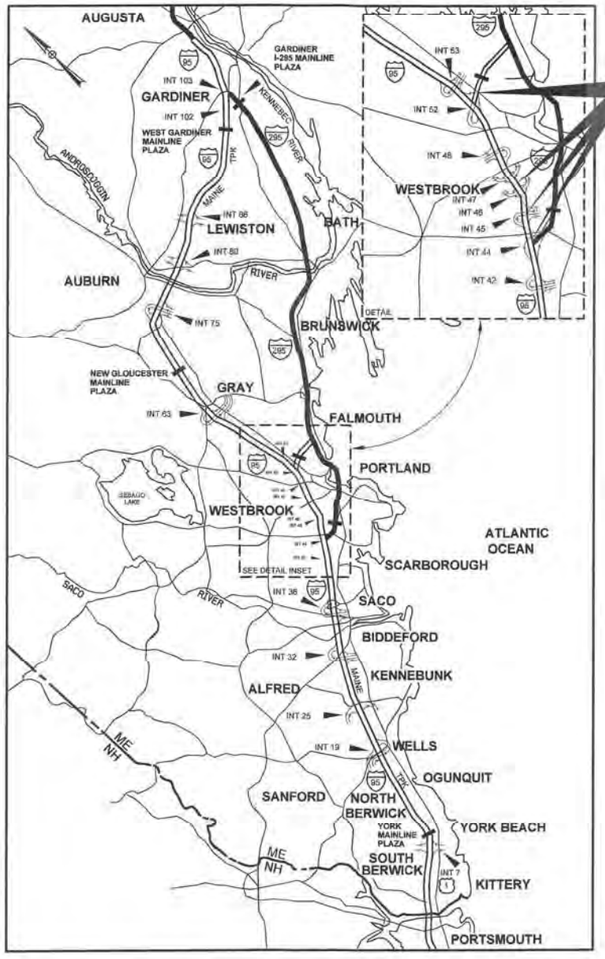

LOCATION MAP

EXIT 45 BRIDGE (MM 44.9)
EXIT 46 BRIDGE (MM 46.3)
EXIT 46 PAVING (MM 46.3)
MM 44.0 TO MM 49.01 AND FS 0.60

MAINE TURNPIKE

THE GOLD STAR MEMORIAL HIGHWAY

MAINE TURNPIKE AUTHORITY

DANIEL E. WATHEN, CHAIR
JAMES F. CLOUTIER, VICE CHAIR
GERARD P. CONLEY, SR., MEMBER
JOHN E. DORITY, MEMBER
ROBERT D. STONE, MEMBER
FREEMAN R. GOODRICH, MEMBER
KAREN DOYLE, MEMBER EX-OFFICIO

S. PETER MILLS, EXECUTIVE DIRECTOR

INDEX OF SHEETS

SHEET NO.	DESCRIPTION
1	TITLE SHEET
2	ESTIMATED QUANTITIES
3	GENERAL NOTES AND EARTHWORK SUMMARY
4	DRAINAGE SUMMARY AND DETAILS
5-8	EXIT 46 - TYPICAL SECTIONS
9-10	EXIT 46 - GUARDRAIL DETAILS
11	EXIT 46 - LIGHTING DETAILS
12	EXIT 46 - EROSION CONTROL DETAILS
13	EXIT 46 - SIGN DETAILS
14-29	MAINTENANCE OF TRAFFIC
30-31	GEOMETRIC PLANS
32-36	EXIT 46 PAVING PLANS
37	EXIT 46 SB OFF RAMP WIDENING PLAN
38-42	EXIT 46 SB OFF RAMP CROSS SECTIONS
43	EXIT 46 NB ON RAMP WIDENING PLAN
44-52	EXIT 46 NB ON RAMP CROSS SECTIONS
53	EXIT 46 LIMIT OF DISTURBANCE PLAN
54	EXIT 44 - SIGNS AND LINEWORK
55	EXIT 46 - STRIPING PLAN
56-63	EXIT 45 - BRIDGE PLANS
64-66	EXIT 46 - BRIDGE PLANS
67-69	SNOW FENCE PLANS
70-71	CONGRESS STREET - BRIDGE MOUNTED SIGN
72-73	RAILROAD BRIDGE CONDUIT
74-93	AS-BUILTS

CONTRACT 2015.03
BRIDGE REPAIRS
EXIT 45 BRIDGE (MM 44.9)
EXIT 46 BRIDGE (MM 46.3)

PAVING REHABILITATION
EXIT 46 (MM 46.3)

MISCELLANEOUS TURNPIKE REPAIRS
MM 44.0 TO MM 49.01 AND FS 0.60

HNTB

APPROVED:
MAINE TURNPIKE AUTHORITY

Peter A Merfeld — 01-20-15
PETER S. MERFELD, P.E. - CHIEF OPERATIONS OFFICER — DATE

Stephen R Tartre — 1/20/15
STEPHEN R. TARTRE, P.E., - DIRECTOR OF ENGINEERING & BUILDING MAINTENANCE — DATE

STATE OF MAINE ROLAND A. LAVALLEE No. 6452 LICENSED PROFESSIONAL ENGINEER

Roland A. Lavallee — 1/15/15
ROLAND A. LAVALLEE P.E., PLS
VICE PRESIDENT
DIRECTOR OF OPERATIONS — DATE

CONTRACT 2015.03

Date:02/15/05

Filename: 001_MTATitle.dgn

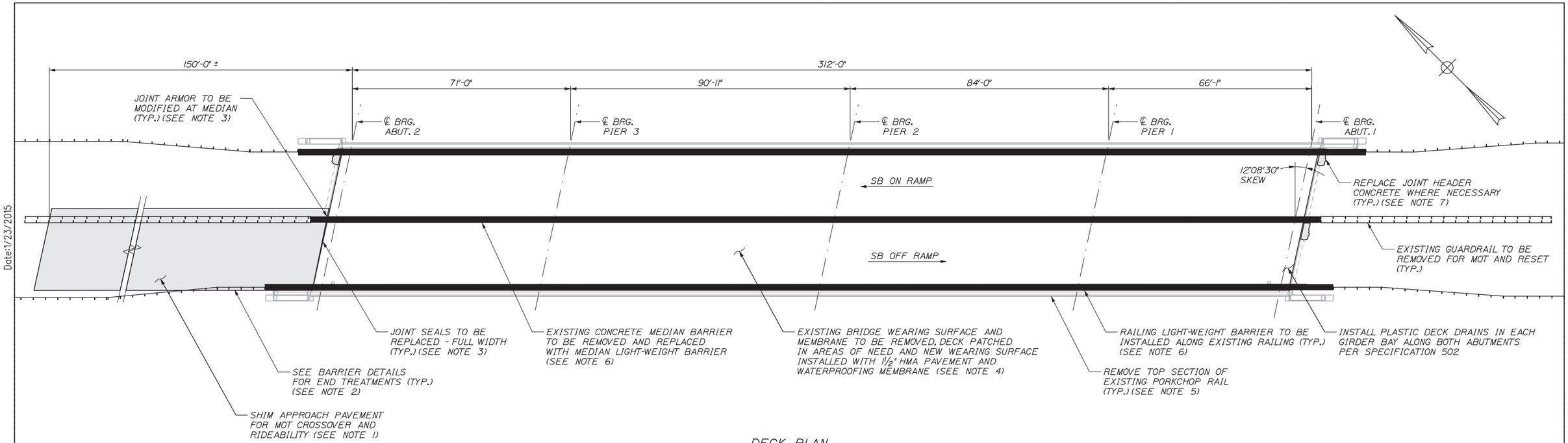

DECK PLAN
1/16" = 1'-0"

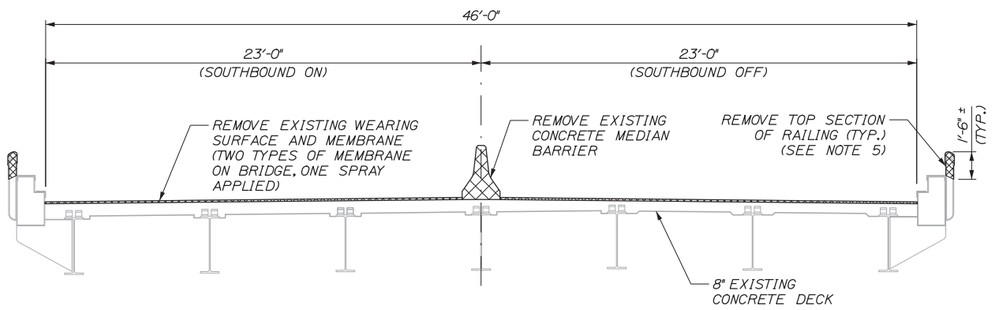

TYPICAL SECTION - EXISTING
1/4" = 1'-0"

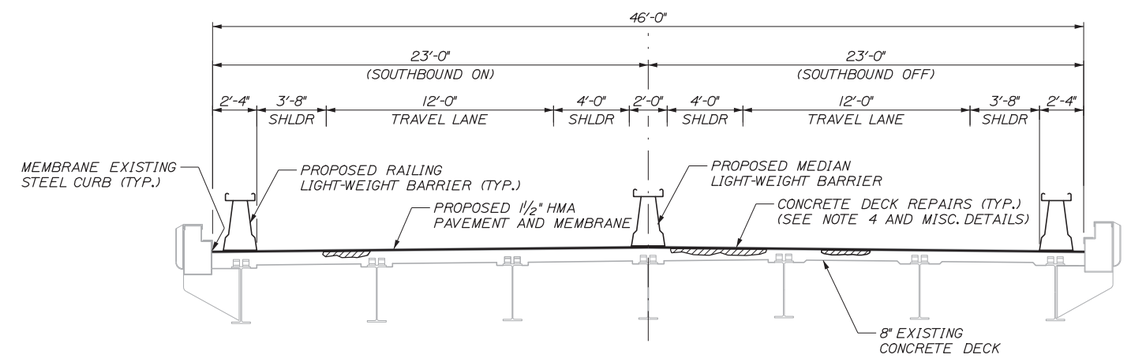

TYPICAL SECTION - PROPOSED
1/4" = 1'-0"

NOTES:

1. THERE IS A HEIGHT DIFFERENTIAL OF APPROXIMATELY 6" BETWEEN THE WEST APPROACH PAVEMENT ON RAMP AND OFF RAMP. THE SOUTHWEST APPROACH PAVEMENT SHALL BE SHIMMED TO PROVIDE A SMOOTH CROSSOVER DURING MAINTENANCE OF TRAFFIC (MOT) OPERATIONS AND TO IMPROVE CURRENT RIDEABILITY. SEE MAINTENANCE OF TRAFFIC DETAILS FOR MORE INFORMATION ON LAYOUT AND SHIM LIMITS.

2. PROPOSED LIGHT-WEIGHT BARRIER TRANSITIONS WILL REQUIRE DIRECT GUARDRAIL TRANSITIONS. SEE BARRIER DETAILS FOR MORE INFORMATION. THE TRANSITIONS SHALL BE MEASURED FOR PAYMENT UNDER PAY ITEM, LIGHT-WEIGHT BARRIER, 526.35.

3. EXISTING MEDIAN BARRIER SHALL BE REMOVED TO THE LIMITS SHOWN IN THE BARRIER DETAILS. REMOVAL SHALL INCLUDE REMOVING PORTIONS OF THE EXISTING JOINT AT THE MEDIAN BARRIER. JOINT REMOVAL SHALL BE INCIDENTAL TO PAY ITEM 202.299, REMOVING CONCRETE BARRIER. JOINT MODIFICATIONS AND SEAL REPLACEMENT SHALL BE MEASURED FOR PAYMENT UNDER PAY ITEM 520.21, EXPANSION DEVICE-GLAND SEAL. FOR MORE INFORMATION ON DEMOLITION AND MODIFICATION SEE JOINT DETAILS.

4. AFTER THE EXISTING WEARING SURFACE AND MEMBRANE ARE REMOVED THE RESIDENT SHALL IDENTIFY AREAS OF DECK REPAIRS BASED ON REQUIREMENTS IN SPECIAL PROVISION 503 AND 518. THE ACTUAL REPAIR AREAS FOR THIS ITEM ARE UNDEFINED. FOR QUANTITIES IT WAS ASSUMED THAT 7.5% OF THE DECK AREA WILL REQUIRE PARTIAL DEPTH CONCRETE DECK REPAIRS AND 1% OF THE DECK AREA WILL REQUIRE FULL DEPTH CONCRETE DECK REPAIRS. THIS WORK SHALL BE MEASURED FOR PAYMENT UNDER PAY ITEMS 518.80, PARTIAL DEPTH CONCRETE DECK REPAIRS AND 518.81, FULL DEPTH CONCRETE DECK REPAIRS.

5. THE EXISTING PORKCHOP RAILINGS AND POSTS SHALL BE REMOVED TO THE LIMITS SHOWN IN THE TYPICAL SECTION. METHOD OF REMOVAL SHALL BE IN ACCORDANCE WITH SPECIAL PROVISION 107 AND 202. THIS WORK SHALL BE MEASURED FOR PAYMENT UNDER PAY ITEM 202.114, REMOVING EXISTING RAILINGS.

6. THE PROPOSED MEDIAN LIGHT-WEIGHT BARRIER AND RAILING LIGHT-WEIGHT BARRIER SHALL BE "BARRIERGUARD 800 MDS". SEE BARRIER DETAILS AND SPECIAL PROVISION 507 FOR MORE INFORMATION ON LAYOUT, PRODUCT AND MANUFACTURER.

7. BRIDGE JOINT HEADER REPLACEMENT, WHICH INCLUDES PATCHING APPROACH PAVEMENT, SHALL BE PERFORMED ON AN AS NEEDED BASIS ALONG ALL JOINTS. THE ACTUAL REPAIR AREAS FOR THIS ITEM ARE UNDEFINED AND WILL BE DETERMINED IN THE FIELD BY THE RESIDENT. THIS WORK SHALL BE MEASURED FOR PAYMENT UNDER PAY ITEM 518.86, BRIDGE JOINT HEADER REPLACEMENT.

8. REMOVAL/INSTALLATION OF WEARING SURFACE AND PLACEMENT OF LIGHT-WEIGHT BARRIER SHALL BE ACCOMPLISHED USING THE CONSTRUCTION SEQUENCE PRESENTED IN THE EXIT 45 MAINTENANCE OF TRAFFIC DETAILS.

9. BRIDGE JOINT SEALS SHALL BE INSTALLED PRIOR TO INSTALLATION OF PERMANENT LIGHT-WEIGHT BARRIER.

Date:1/23/2015

Filename: 056_DeckPlan-45.dgn

Scale:

No.	Revision	By	Date

Designed by:

HNTB

CONSULTANT PROJECT MANAGER: Craig R. Morin, P.E.

	By	Date		By	Date
Designed	KEB	01/15	Checked	CRM	01/15
Drawn	MPC	01/15	In Charge of	RAL	01/15

HNTB CORPORATION
340 County Road, Suite 6-C
Westbrook, ME 04092
TEL (207) 774-5155
FAX (207) 228-0909

MAINE TURNPIKE

THE GOLD STAR MEMORIAL HIGHWAY

MTA PROJECT MANAGER: Ralph C. Norwood, IV, P.E., P.T.O.E.

BRIDGE REPAIRS
PAVEMENT REHABILITATION
EXIT 45 BRIDGE
DECK PLAN AND TYPICAL SECTION

SHEET NUMBER: S-01

CONTRACT:2015.03

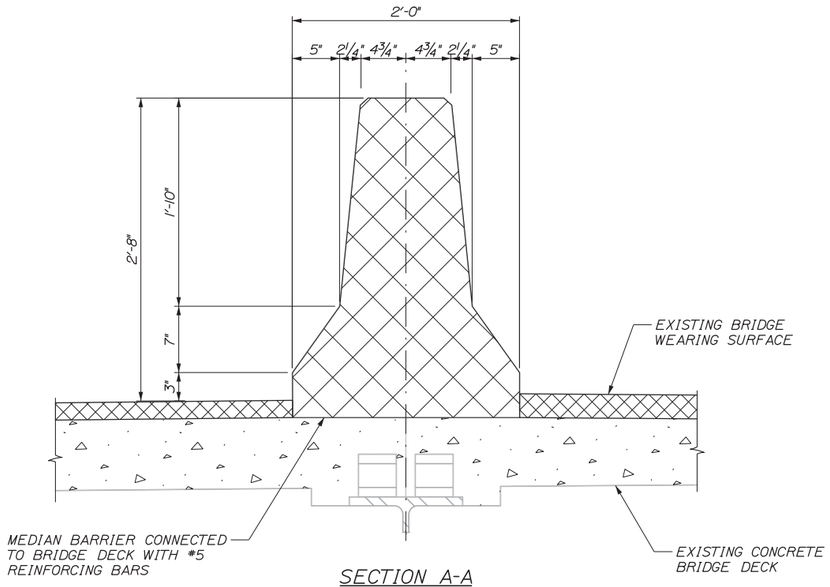

SECTION A-A

(EXISTING BRIDGE MEDIAN BARRIER DEMOLITION LIMITS)

1½" = 1'-0"

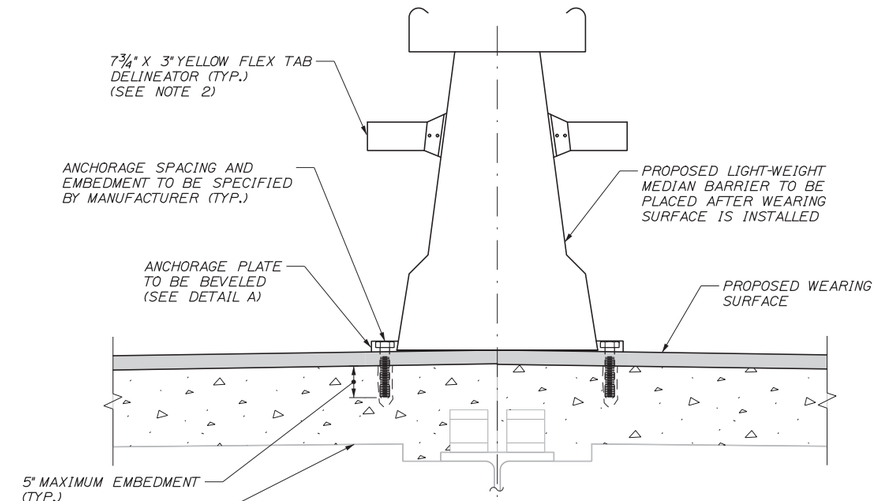

SECTION C-C

(PROPOSED MEDIAN BARRIER)

1½" = 1'-0"

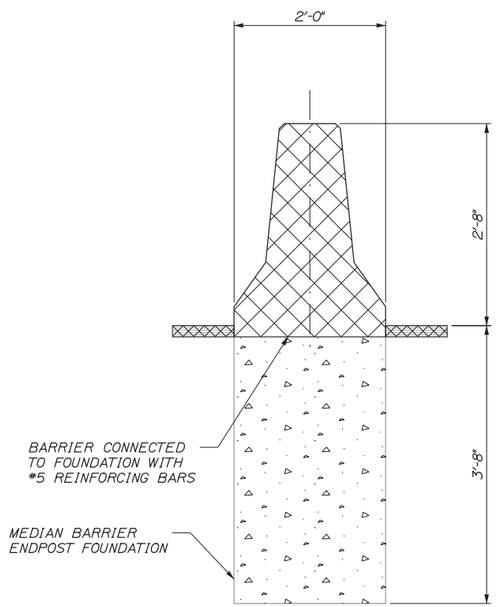

SECTION B-B

(EXISTING MEDIAN BARRIER ENDPOST DEMOLITION LIMITS)

1" = 1'-0"

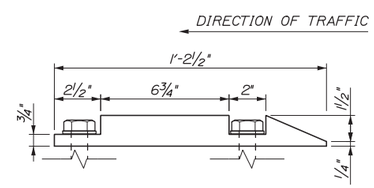

DETAIL A

(ELEVATION/SIDE VIEW OF BARRIER ANCHOR PLATE)

3" = 1'-0"

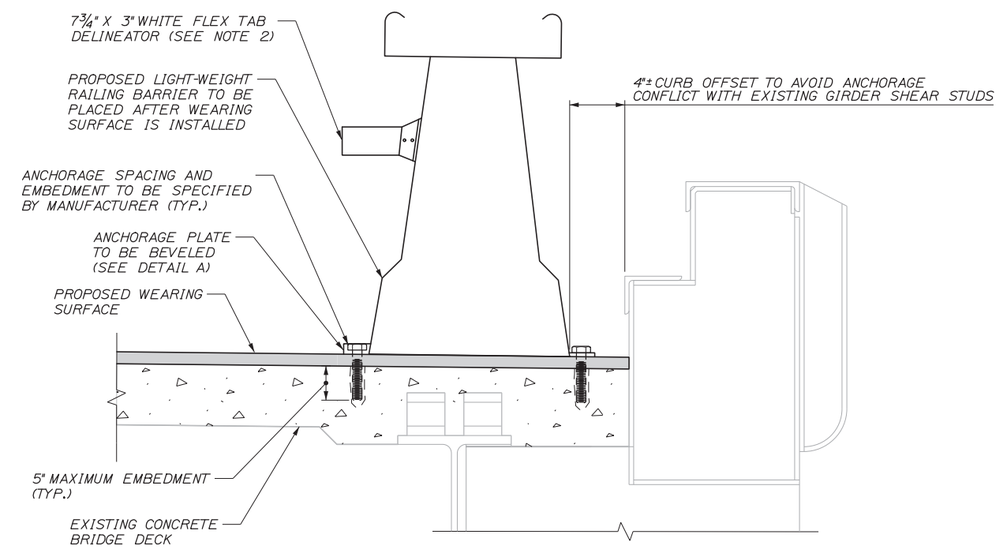

SECTION D-D

(PROPOSED RAILING BARRIER)

1½" = 1'-0"

NOTES:

1. SEE BARRIER SHEET S-04 FOR SECTION CUT LOCATIONS.
2. FLEX TAB DELINEATORS SHALL BE INSTALLED ON EACH BARRIER FACE EXPOSED TO TRAFFIC. THE FLEX TABS SHALL BE FABRICATED AND INSTALLED (ADHESIVE MOUNTED) ACCORDING TO THE BARRIER MANUFACTURERS DETAIL. THE FLEX TABS SHALL BE INCIDENTAL TO THE LIGHT-WEIGHT BARRIER ITEM.
3. ANCHORAGE PLATES SHALL BE BEVELED TO PROVIDE A GUIDE FOR THE PLOW BLADES TO RIDE UP AND CLEAR THE ANCHORAGE BOLTS.

Date:1/23/2015

Filename: 060_BarrierDets II.dgn

Scale:

No.	Revision	By	Date

Designed by:

HNTB

CONSULTANT PROJECT MANAGER: Craig R. Morin, P.E.

	By	Date		By	Date
Designed	KEB	01/15	Checked	CRM	01/15
Drawn	MPC	01/15	In Charge of	RAL	01/15

HNTB CORPORATION
340 County Road, Suite 6-C
Westbrook, ME 04092
TEL (207) 774-5155
FAX (207) 228-0909

MAINE TURNPIKE

THE GOLD STAR MEMORIAL HIGHWAY

MTA PROJECT MANAGER: Ralph C. Norwood, IV, P.E., P.T.O.E.

BRIDGE REPAIRS
PAVEMENT REHABILITATION

EXIT 45 BRIDGE
BARRIER DETAILS II

SHEET NUMBER: S-05

CONTRACT:2015.03

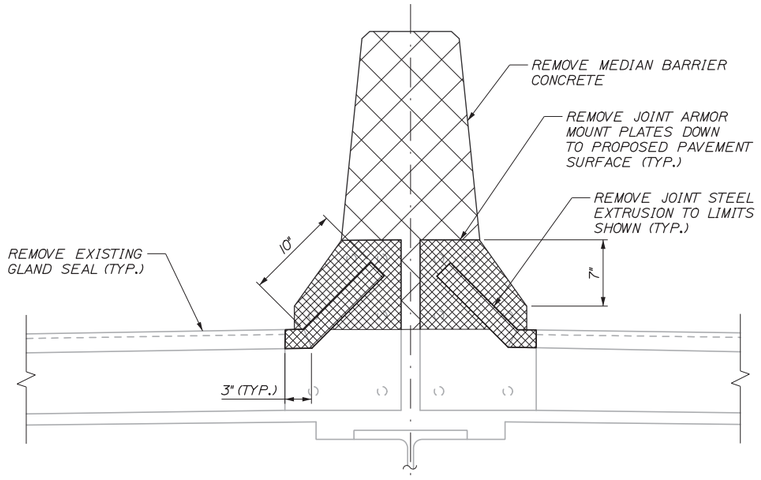

SECTION E-E
(JOINT ARMOR DEMOLITION LIMITS)
1½" = 1'-0"

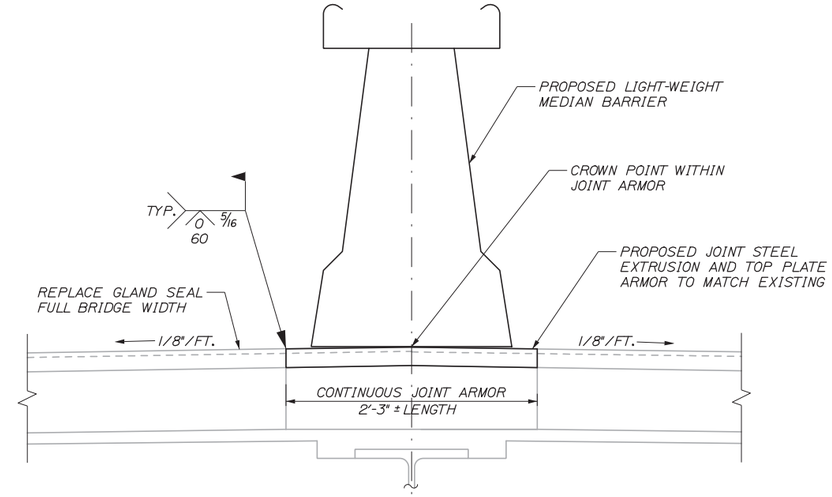

SECTION G-G
(PROPOSED JOINT MODIFICATION)
1½" = 1'-0"

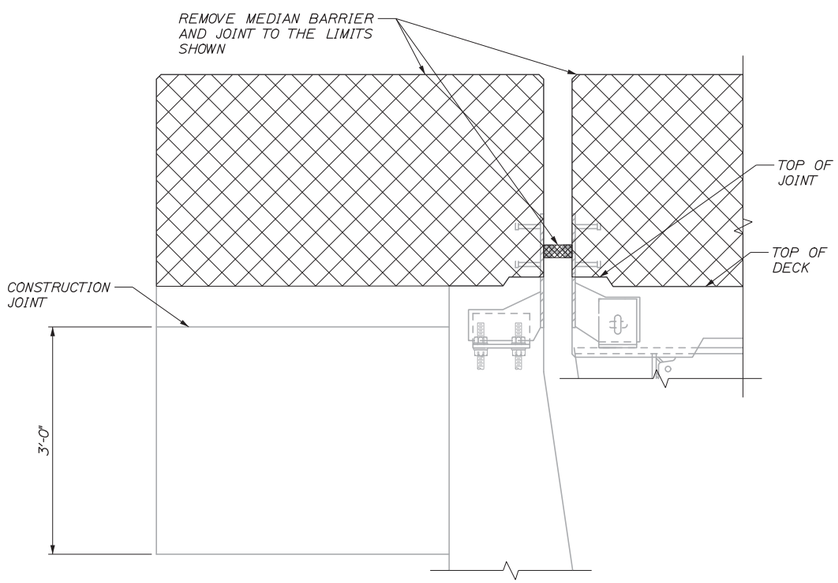

SECTION F-F
(DEMOLITION LIMITS)
1" = 1'-0"

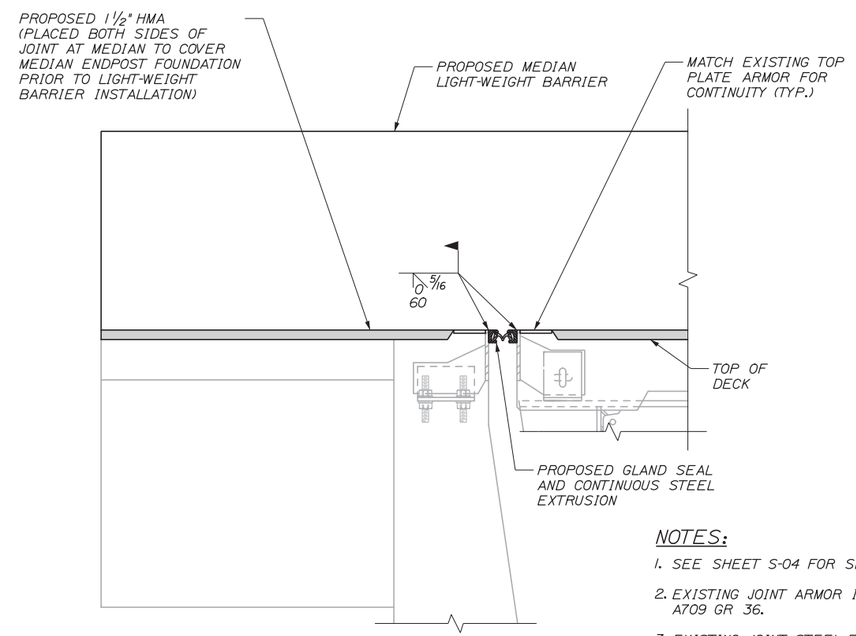

SECTION H-H
(PROPOSED CONDITION)
1" = 1'-0"

NOTES:

1. SEE SHEET S-04 FOR SECTION CUT LOCATIONS.
2. EXISTING JOINT ARMOR IS EITHER ASTM A7 GR 33 STEEL OR ASTM A709 GR 36.
3. EXISTING JOINT STEEL EXTRUSION IS WATSON BOWMAN ACME TYPE A FOR STRIP SEALS. PROPOSED STEEL EXTRUSION SHALL MATCH EXISTING.
4. CONTRACTOR SHALL VERIFY PROPOSED SEAL FITS THE EXISTING STEEL EXTRUSION PRIOR TO INSTALLATION.

Scale:

No.	Revision	By	Date

Designed by:

HNTB

CONSULTANT PROJECT MANAGER: Craig R. Morin, P.E.

	By	Date		By	Date
Designed	KEB	01/15	Checked	CRM	01/15
Drawn	MPC	01/15	In Charge of	RAL	01/15

HNTB CORPORATION
340 County Road, Suite 6-C
Westbrook, ME 04092
TEL (207) 774-5155
FAX (207) 228-0909

MAINE TURNPIKE

THE GOLD STAR MEMORIAL HIGHWAY

MTA PROJECT MANAGER: Ralph C. Norwood, IV, P.E., P.T.O.E.

BRIDGE REPAIRS
PAVEMENT REHABILITATION

EXIT 45 BRIDGE
JOINT DETAILS

SHEET NUMBER: S-07

CONTRACT:2015.03

Date:1/23/2015
Filename: 062_JointDets-45.dgn

FOREST AVENUE OVERPASS (MM 50.0)

SPECIFICATIONS

DESIGN

AASHTO STANDARD SPECIFICATIONS FOR HIGHWAY BRIDGES 1996.

CONTRACT

STATE OF MAINE, DEPARTMENT OF TRANSPORTATION, STANDARD SPECIFICATIONS, HIGHWAYS AND BRIDGES, REVISION OF APRIL 1995 AS AMENDED.

DESIGN LOADING

LIVE LOAD

HS20, 500,000 CYCLES

DESIGN METHOD

LOAD FACTOR (SUPERSTRUCTURE ONLY)

MATERIALS

CONCRETE

SUPERSTRUCTURE SLAB, PARAPETS AND END POSTS
CONCRETE SHALL BE CLASS AAA, f'c = 4,500 P.S.I.
ALL OTHER SUBSTRUCTURE CONCRETE SHALL BE CLASS A, f'c = 4,000 P.S.I.

REINFORCING STEEL

AASHTO M31, GRADE 60. (EPOXY-COATED AND UNCOATED BARS)

STRUCTURAL STEEL

EXISTING STRUCTURAL STEEL IS ASTM A7, GRADE 33.
PROPOSED STRUCTURAL STEEL SHALL BE AASHTO M270, GRADE 36.
HIGH STRENGTH BOLTS SHALL BE AASHTO M164.

GENERAL NOTES

1. COPIES OF AS-BUILT PLANS THAT ARE ON FILE AT THE MAINE TURNPIKE AUTHORITY ARE INCLUDED IN THIS CONTRACT. THE ACCURACY OF THESE PLANS ARE NOT GUARANTEED.
2. SHIELDING REQUIRED DURING CONCRETE REMOVAL SHALL NOT PROJECT BELOW THE BOTTOM FLANGES OF STRINGERS. THE ESTIMATED QUANTITY OF SHIELDING IS THE MINIMUM REQUIRED AND IS BASED ON THE FOLLOWING LIMITS:
   A. NORMAL TO ℄ BRIDGE: AS SHOWN ON THE PLANS
   B. PARALLEL TO ℄ BRIDGE: ABUTMENT TO ABUTMENT
3. THE AUTHORITY'S PERSONNEL WILL PROFILE THE TOPS OF ALL STRINGERS BEFORE THE FORM WORK IS STARTED AND SUPPLY THE CONTRACTOR WITH FINAL BOTTOM OF SLAB ELEVATIONS.
4. REINFORCING STEEL SHALL HAVE A CLEAR COVER OF 2" UNLESS OTHERWISE SPECIFIED.
5. PLACE ALL REINFORCING STEEL TO CLEAR ANCHOR BOLTS.
6. CHAMFER ALL EXPOSED CONCRETE EDGES ¾", UNLESS OTHERWISE NOTED.
7. PREFORMED JOINT FILLER AND JOINT SEALER CALLED FOR ON THE PLANS, WILL BE INCIDENTAL TO ITEMS 502.21 AND 502.261. ◊
8. ALL BRIDGE PARAPET AND END POST CONCRETE TO HAVE A RUBBED FINISH (INCLUDING, INSIDE FACES, TOPS AND OUTSIDE FACES).

ITEM	DESCRIPTION	UNIT	QUANTITIES
202.12	REMOVING EXISTING STRUCTURAL CONCRETE	C.Y.	55
202.1221	REMOVING EXISTING SUPERSTRUCTURE CONCRETE - FOREST AVENUE (70 C.Y.)*	L.S.	1
203.20	COMMON EXCAVATION	C.Y.	15
206.082	STRUCTURAL EARTH EXCAVATION - MAJOR STRUCTURES	C.Y.	270
206.10	STRUCTURAL EARTH EXCAVATION - PIERS	C.Y.	200
304.09	AGGREGATE BASE COURSE-CRUSHED (TYPE A)	C.Y.	5
304.10	AGGREGATE SUBBASE COURSE-GRAVEL	C.Y.	10
403.13	DENSE GRADED BITUMINOUS PAVEMENT FOR BRIDGES	TON	40
501.40	STEEL H-BEAM PILES 53 LBS/FT, DELIVERED	L.F.	3040
501.401	STEEL H-BEAM PILES 53 LBS/FT, IN PLACE	L.F.	3040
501.90	PILE TIPS	EACH	32
501.91	PILE SPLICES	EACH	48
502.21	STRUCTURAL CONCRETE, ABUTMENTS AND RETAINING WALLS	C.Y.	150
502.23	STRUCTURAL CONCRETE, PIERS	C.Y.	110
502.261	STRUCTURAL CONCRETE ROADWAY AND PARAPETS ON STEEL BRIDGES-FOREST AVENUE (160 C.Y.)* ◊	L.S.	1 ◊
502.6311	BACKWALL REPAIR-SURFACE PATCH-SECTION II	S.F.	340
502.6313	ABUTMENT AND BRIDGE SEAT REPAIR-SECTION II	S.F.	285
502.6314	PIER REPAIRS	S.F.	725
502.6316	WINGWALL REPAIRS-SECTION II	S.F.	25
502.64	PATCHROC 10-60 BRIDGE DECK REPAIR (50 LB BAG)	EA.	50
503.12	REINFORCING STEEL, FABRICATED AND DELIVERED	LB.	6480
503.13	REINFORCING STEEL, PLACING	LB.	6480
503.14	EPOXY-COATED REINFORCING STEEL, FABRICATED AND DELIVERED	LB.	66415
503.15	EPOXY-COATED REINFORCING STEEL, PLACING	LB.	66415 ◊
503.171	MECHANICAL SPLICE - FOREST AVENUE ◊	L.S	1
S04.7011	STRUCTURAL STEEL FABRICATED AND DELIVERED - FOREST AVENUE (61650 LBS, GRADE 36), (2108 LBS, GRADE 50)*	L.S	1
504.711	STRUCTURAL STEEL ERECTION - FOREST AVENUE (63760 LBS)* ◊	L.S.	1
504.73	REPAIR OF BRIDGE BEARINGS - FOREST AVENUE	HOURS	100
506.301	SHOP COATING OF STRUCTURAL STEEL - FOREST AVENUE	L.S.	1
506.311	FIELD REPAIR OF DAMAGED COATING - FOREST AVENUE	L.S.	1
507.0911	ALUMINUM BRIDGE RAILING 1- BAR-FOREST AVENUE (600 L.F.)*	L.S.	1
508.131	MEMBRANE WATERPROOFING-FOREST AVENUE (395 SY)* ◊	L.S.	1
511.091	TEMPORARY EARTH SUPPORT SYSTEM - FOREST AVENUE	L.S.	1
514.06	CURING BOX FOR CONCRETE CYLINDERS	EA.	1
515.201	PIGMENTED PROTECTIVE COATING FOR CONCRETE SURFACES	S.Y.	410
515.202	CLEAR PROTECTIVE COATING FOR CONCRETE SURFACES	S.Y.	505
520.221	EXPANSION DEVICE - LOCKING COMPRESSION SEAL WITH STEEL EDGE BEAMS - FOREST AVENUE (65 LF)* ◊	EA.	4 ◊
524.40	PROTECTIVE SHIELD ◊	S.Y.	605
609.15	SLOPED CURB TYPE I	L.F.	645

* QUANTITIES FOR ESTIMATING PURPOSES ONLY

INDEX OF DRAWINGS

SHEET NO.	TITLE
FA-1	SPECIFICATIONS, GENERAL NOTES AND QUANTITIES
FA-2	GENERAL PLAN (SB) AND ELEVATION
FA-3	GENERAL PLAN (NB) AND ELEVATION
FA-4	SEQUENCE OF CONSTRUCTION
FA-5	FOUNDATION PLAN
FA-6	EXISTING SB ABUTMENTS
FA-7	ABUTMENT 1 - SB MODIFICATIONS
FA-8	ABUTMENT 2 - SB MODIFICATIONS
FA-9	EXISTING NB ABUTMENTS
FA-10	ABUTMENT 1 - NB MODIFICATIONS
FA-11	ABUTMENT 2 - NB MODIFICATIONS
FA-12	ABUTMENT DETAILS I
FA-13	ABUTMENT DETAILS II
FA-14	WINGWALL MODIFICATIONS I
FA-15	WINGWALL MODIFICATIONS II
FA-16	PIER - SB MODIFICATIONS I
FA-17	PIER - SB MODIFICATIONS II
FA-18	PIER - NB MODIFICATIONS I
FA-19	PIER - NB MODIFICATIONS II
FA-20	FRAMING PLAN (SB) AND STRINGER ELEVATION
FA-21	FRAMING PLAN (NB) AND STRINGER ELEVATION
FA-22	STRUCTURAL STEEL DETAILS
FA-23	BEARING DETAILS
FA-24	DECK PLAN SB AND TYPICAL SECTION
FA-25	DECK PLAN NB AND TYPICAL SECTION
FA-26	SLAB DETAILS I
FA-27	SLAB DETAILS II
FA-28	EXPANSION JOINT DETAILS I
FA-29	EXPANSION JOINT DETAILS II
FA-30	ALUMINUM BRIDGE RAIL DETAILS
FA-31	ABUTMENT & PIER REPAIR PAY LIMITS
FA-32	ABUTMENT REPAIRS
FA-33	SOUTHBOUND PIER REPAIRS
FA-34	NORTHBOUND PIER REPAIRS
FA-35	REINFORCING SCHEDULE I
FA-36	REINFORCING SCHEDULE II
FA-37	REINFORCING SCHEDULE III
FA-38	REINFORCING SCHEDULE IV

INDEX OF AS-BUILT DRAWINGS

SHEET NO.	TITLE
72 OF 382	GENERAL PLAN AND ELEVATION
73 OF 382	ABUTMENTS AND PIERS
74 OF 382	SUPERSTRUCTURE
2 OF 16	GENERAL NOTES AND QUANTITIES
5 OF 16	DECK REPLACEMENT

THIS SHEET REVISED 2/28/97

No.	Revision	By:	Date:		By:	Date:
				Designed	HLR	2/97
				Drawn	LS	2/97
◊	REVIEW OF QUANTITIES AND ITEM NUMBERS	KJG	2/28/97	Checked	AD	2/97
				In charge of:	RAL	

Maine Turnpike Authority
Maine Turnpike

Trans pass

FOREST AVENUE OVERPASS
SPECIFICATIONS, GENERAL NOTES AND QUANTITIES

HNTB
ARCHITECTS ENGINEERS PLANNERS

Contract 97.8

Sheet No. FA-1
45 of 133

METPK01A

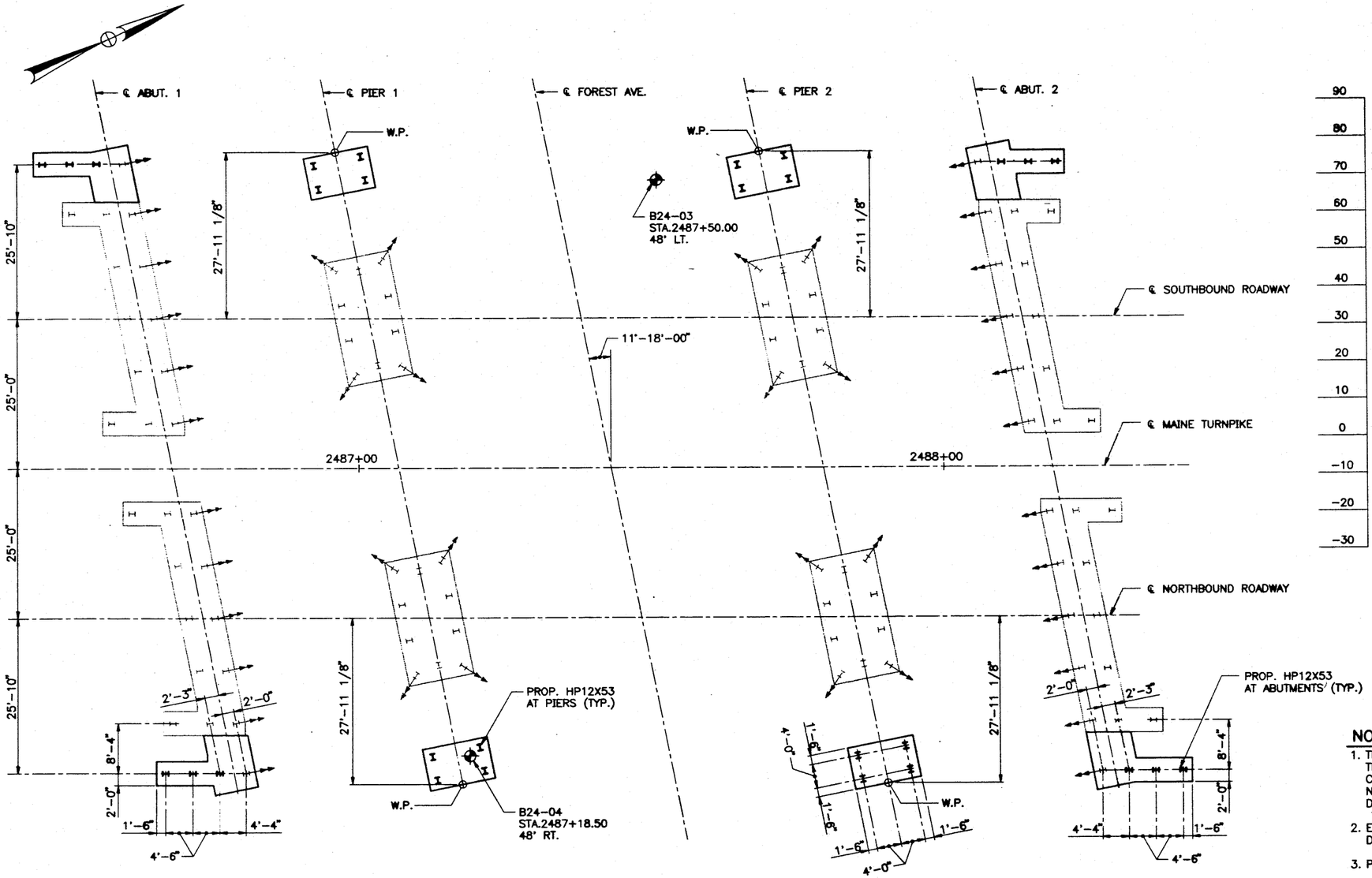

FOOTING PLAN
1"=10'

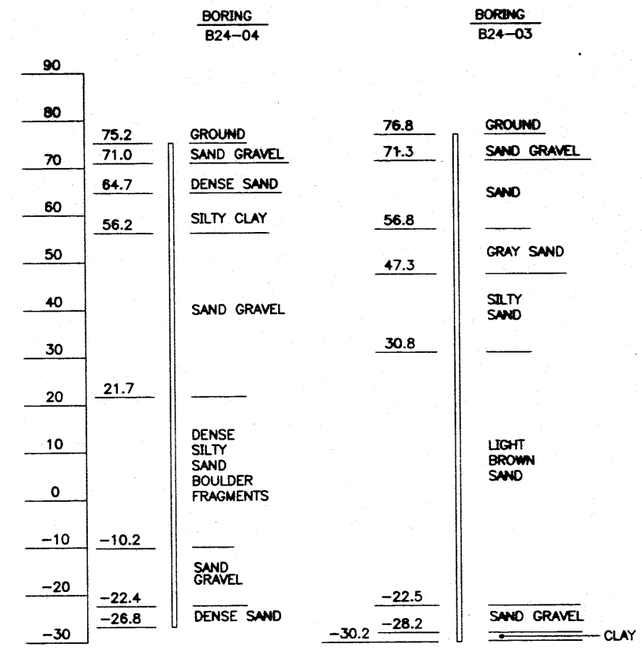

BORING DATA
1/16"=1'-0"

NOTES

1. THE BORINGS SHOWN WERE TAKEN FOR THE ORIGINAL CONSTRUCTION. THE BORINGS WERE TAKEN FOR DESIGN PURPOSES, AND SHOW CONDITIONS AT THE BORING LOCATIONS ONLY. THEY DO NOT NECESSARILY SHOW THE NATURE OF MATERIALS TO BE ENCOUNTERED DURING CONSTRUCTION.
2. ESTIMATED PILE LENGTHS ARE TAKEN FROM THE ORIGINAL CONSTRUCTION DRAWINGS AND ARE NOT GUARANTEED.
3. POINTED REINFORCED PILE TIPS SHALL BE USED FOR ALL FOUNDATION PILES.
4. THE ALTERNATE APPROVAL METHOD, AS DESCRIBED IN STANDARD SPECIFICATION SECTION 501, SHALL BE USED IN PILE INSTALLATION.
   ABUTMENTS: 30.7 TONS/PILE
   PIERS: 58.2 TONS/PILE
5. FOR PIER FOOTING DETAIL, SEE SHEET NO. FA-17 AND FA-19.
6. FOR ABUTMENT FOUNDATION DETAILS, SEE SHEET NO. FA-12 AND FA-13.

EXISTING/PROPOSED BOTTOM OF FOOTING

LOCATION	NORTHBOUND ROADWAY	SOUTHBOUND ROADWAY
ABUTMENT 1	83.38	83.34
PIER 1	66.50	66.50
PIER 2	66.50	66.50
ABUTMENT 2	83.40	83.44

ESTIMATED PILE LENGTHS (FEET)

LOCATION	NORTHBOUND ROADWAY	SOUTHBOUND ROADWAY
ABUTMENT 1	105	105
PIER 1	85	85
PIER 2	85	85
ABUTMENT 2	105	105

No.	Revision	By	Date		By	Date
				Designed	KJG	2/97
				Drawn	LMR	2/97
				Checked	HLR	2/97
				In Charge Of:	RAL	

Maine Turnpike Authority
Maine Turnpike

Trans pass

FOREST AVENUE OVERPASS

FOUNDATION PLAN

HNTB
ARCHITECTS ENGINEERS PLANNERS

Contract 97.8

Sheet No. FA-5
49 of 133

(METPK\BDR-01)
M:\B09009XW\958\023DECK\FA-4 02/10/97 12:02

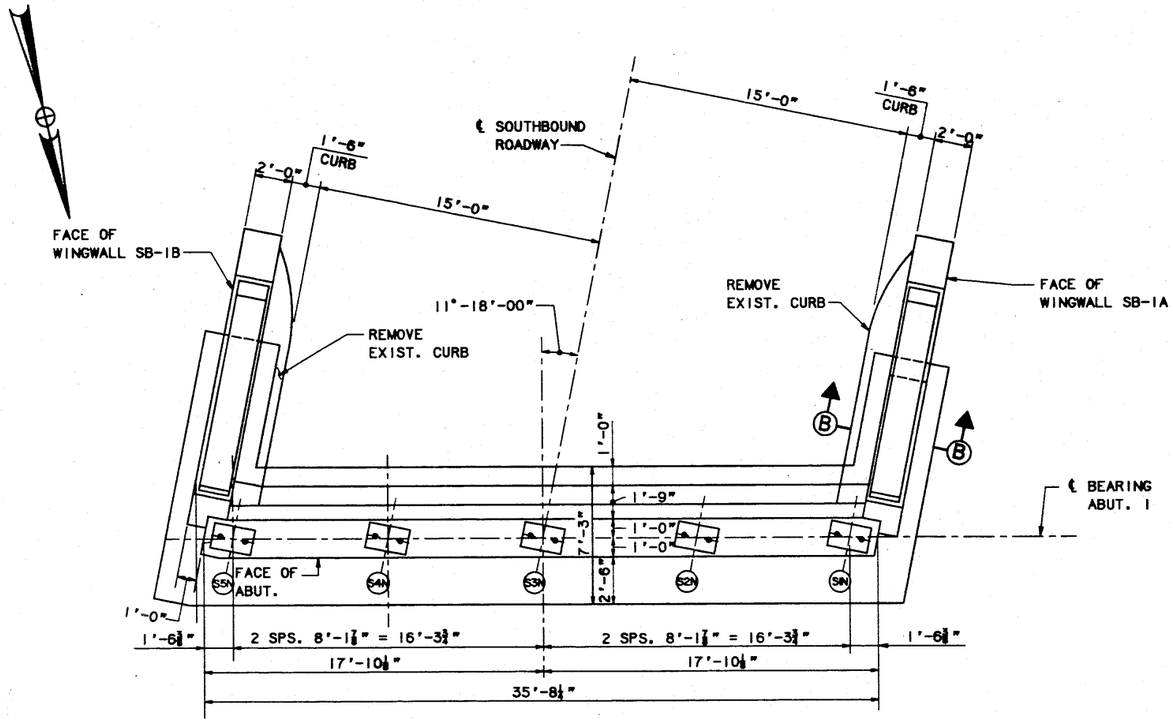

PLAN - ABUTMENT 1
¼"=1'-0"

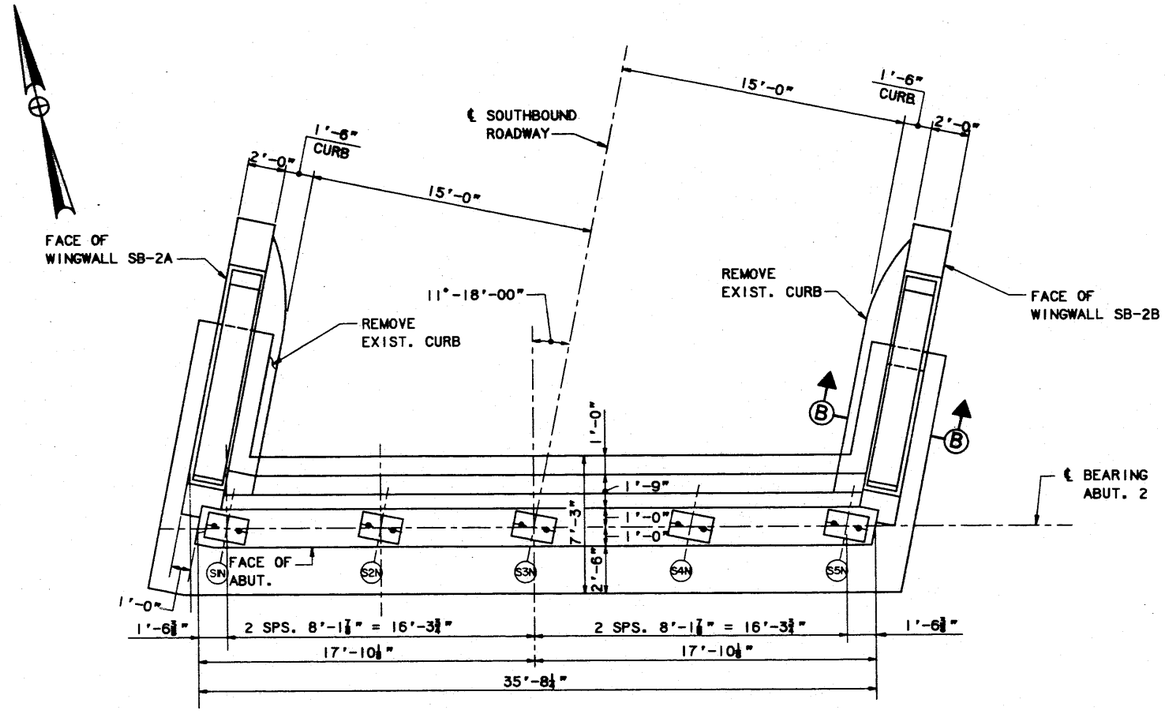

PLAN - ABUTMENT 2
¼"=1'-0"

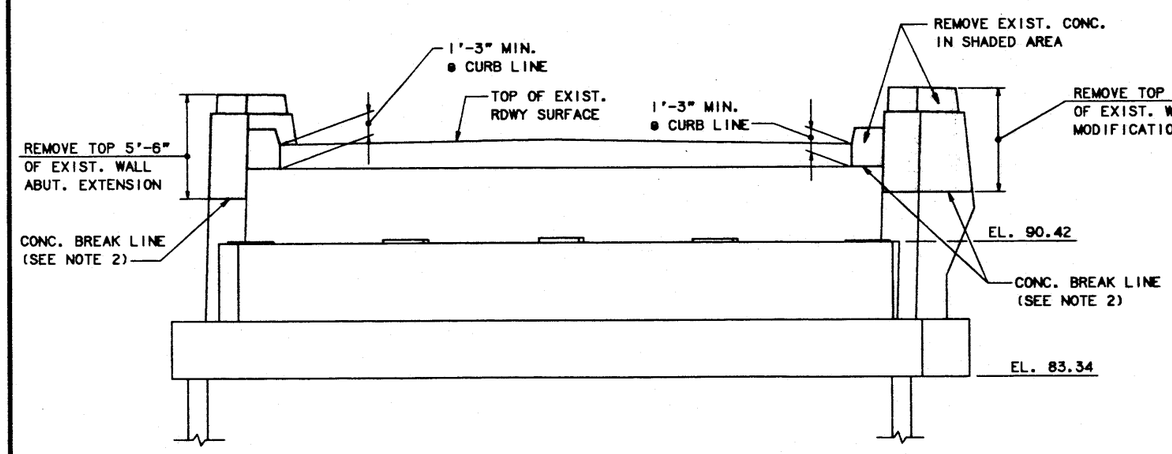

ELEVATION
¼" = 1'-0"

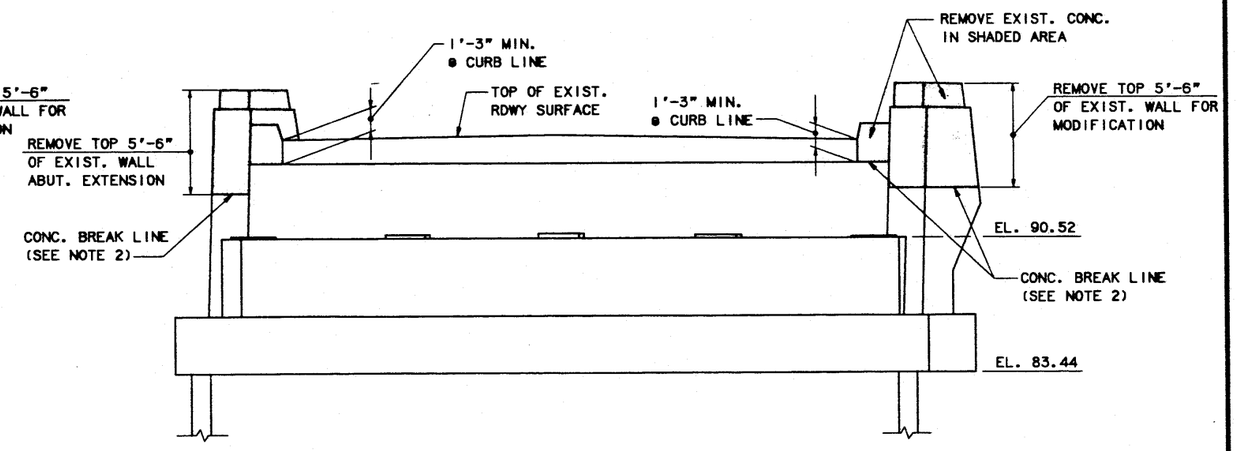

ELEVATION
¼" = 1'-0"

NOTES:

1. FOR NOTES, SEE SHEET NO. FA-10.
2. SAW CUT 1" MIN. DEEP BEFORE REMOVING EXISTING CONCRETE.
3. FOR MODIFICATION OF SB ABUTMENTS 1 AND 2, SEE SHEET NOS. FA-7 AND FA-8 RESPECTIVELY.

No.	Revision	By:	Date:		By:	Date:
				Designed	HLR	2/97
				Drawn	RJT	2/97
				Checked	AD	2/97
				In charge of:	RAL	

Maine Turnpike Authority
Maine Turnpike

Trans Compass

FOREST AVENUE OVERPASS

EXISTING SB ABUTMENTS

HNTB
ARCHITECTS ENGINEERS PLANNERS

Contract 97.8

Sheet No. FA-6
50 of 133

METPK01A

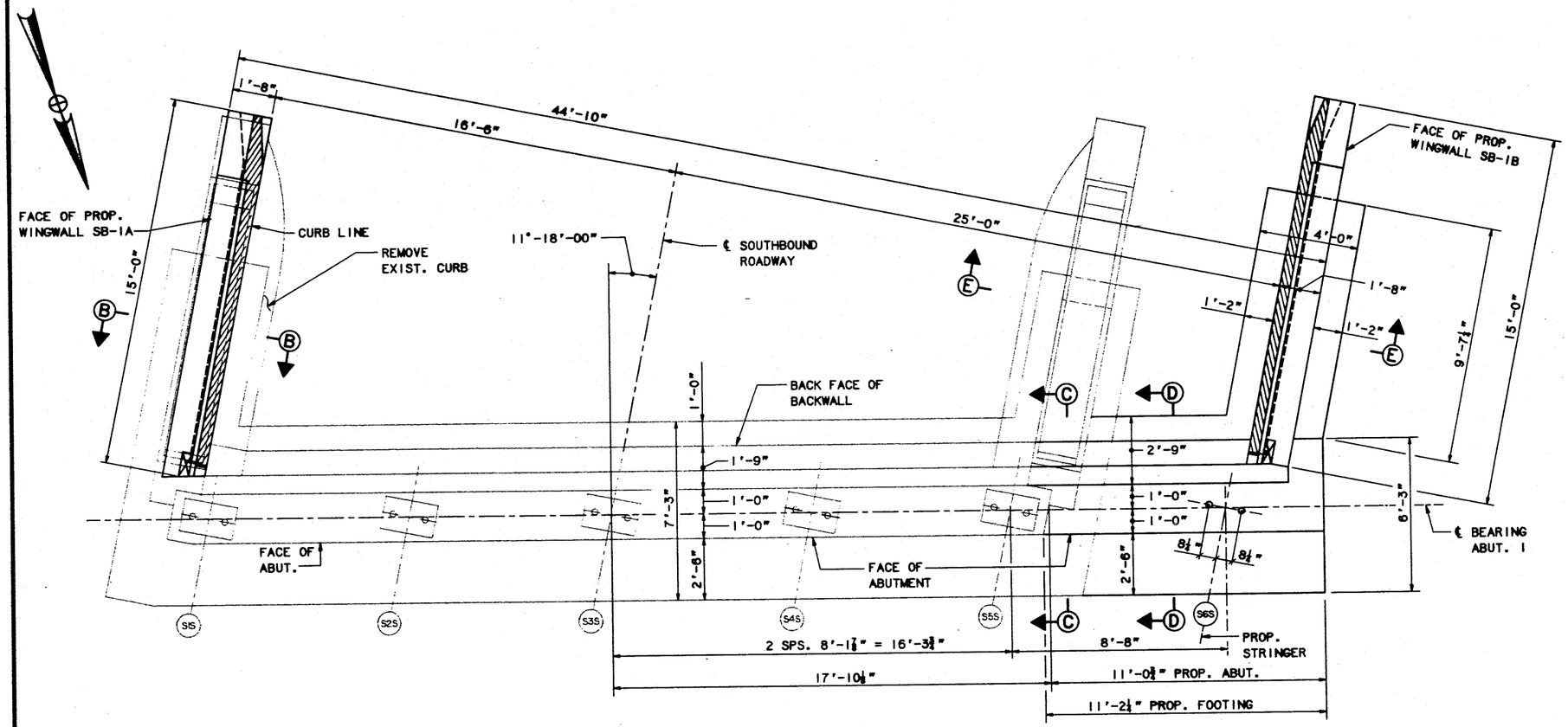

PLAN - ABUTMENT 1
⅛" = 1'-0"

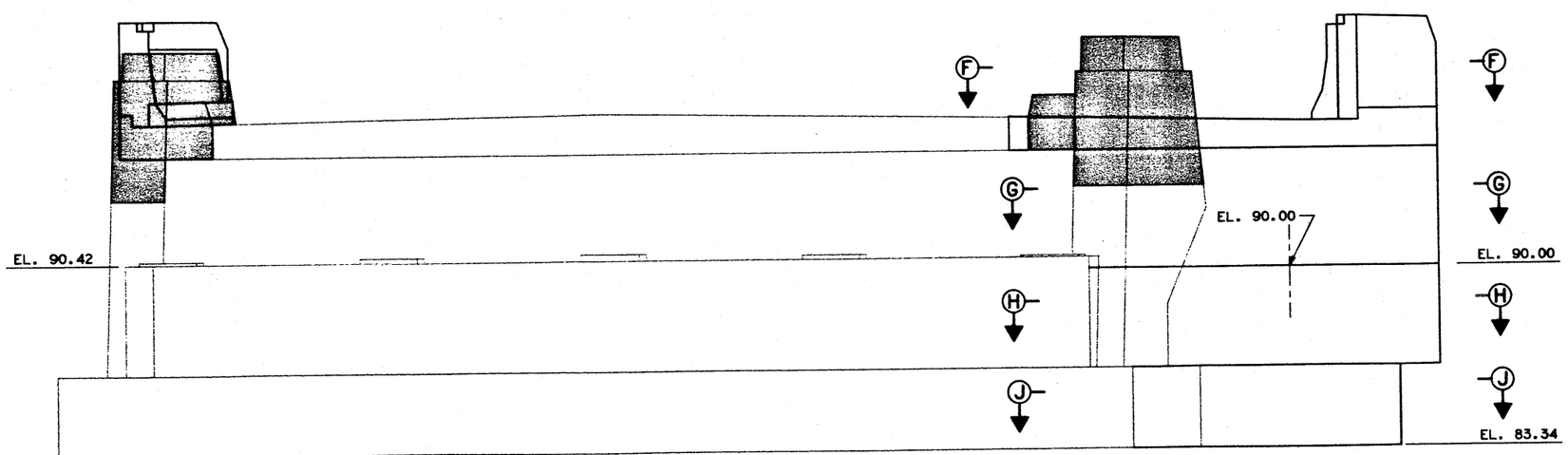

ELEVATION
⅛" = 1'-0"

NOTES:

1. FOR PLAN AND ELEVATION OF EXISTING ABUTMENT 1, SEE SHEET NO. FA-6.
2. FOR SECTIONS G-G-, H-H, J-J SEE SHEET NO. FA-13.
3. FOR SECTIONS B-B, SEE SHEET FA-14 AND SECTIONS E-E, F-F, SEE SHEET FA-12.
4. FOR ELEVATIONS OF WINGWALL SB-1A, SEE SHEET NO. FA-12.
5. FOR ELEVATIONS OF WINGWALL SB-1B, SEE SHEET NO. FA-12.
6. FOR SECTIONS C-C AND D-D, SEE SHEET NO. FA-11.

No.	Revision	By:	Date:		By:	Date:
				Designed	HLR	2/97
				Drawn	RJT	2/97
				Checked	JMH	2/97
				In charge of:	RAL	

Maine Turnpike Authority
Maine Turnpike

Trans pass

FOREST AVENUE OVERPASS
ABUTMENT 1 - SB
MODIFICATIONS

HNTB
ARCHITECTS ENGINEERS PLANNERS

Contract 97.8

Sheet No. FA-7
51 of 133

METPKO1A

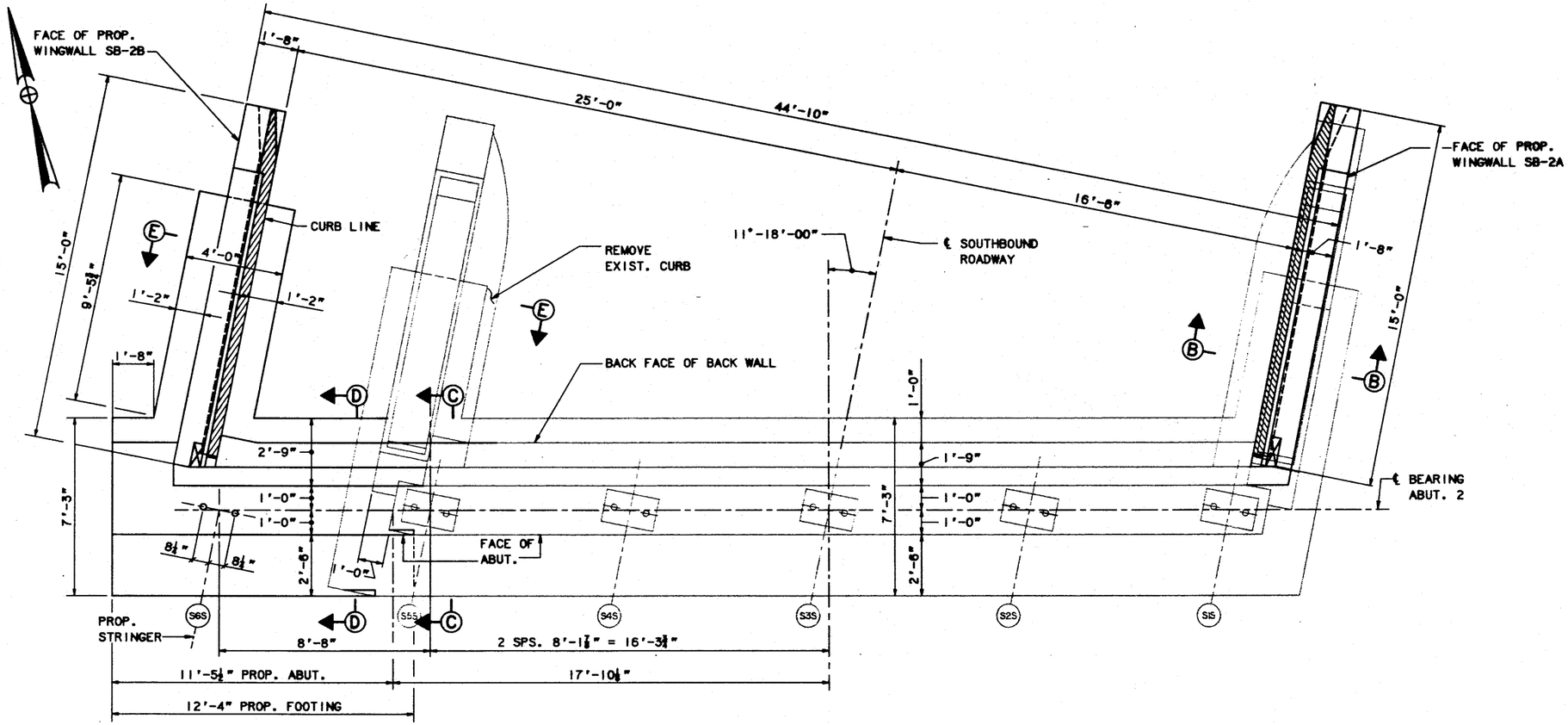

PLAN - ABUTMENT 2

1"=1'-0"

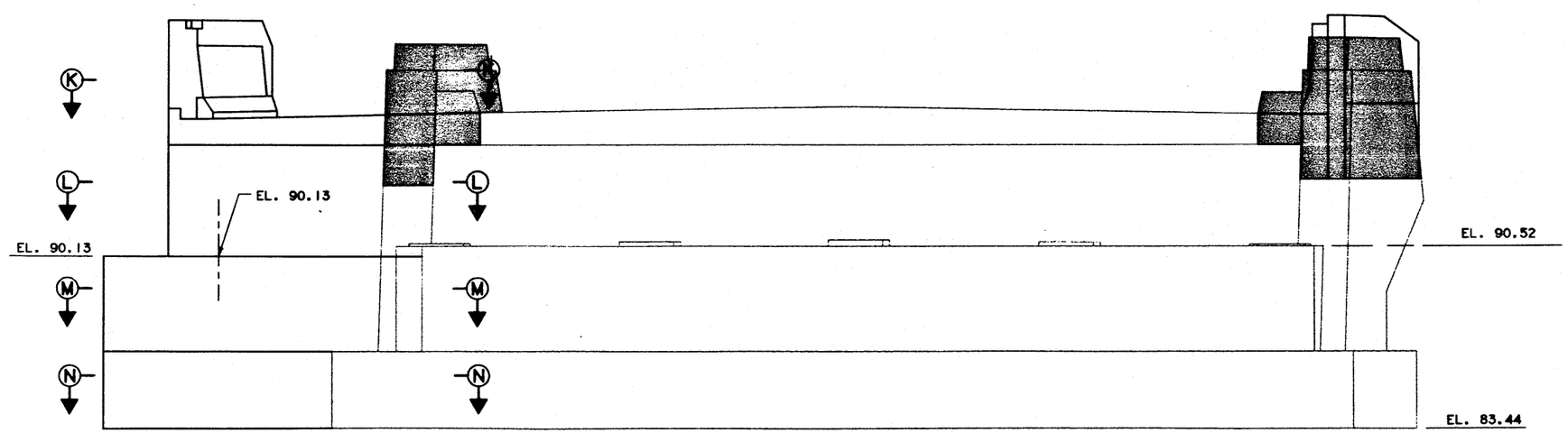

ELEVATION

1" = 1'-0"

NOTES:

1. FOR PLAN AND ELEVATION OF EXISTING ABUTMENT 2, SEE SHEET NO. FA-6.
2. FOR SECTIONS C-C AND D-D, SEE SHEET NO. FA-11.
3. FOR SECTIONS L-L, M-M, N-N SEE SHEET NO. FA-13.
4. FOR SECTIONS B-B, SEE SHEET FA-14 AND SECTIONS E-E, K-K, SEE SHEET NO. FA-12.
5. FOR ELEVATIONS OF WINGWALL SB-2A, SEE SHEET NO. FA-14.
6. FOR ELEVATIONS OF WINGWALL SB-2B, SEE SHEET NO. FA-12.

No.	Revision	By:	Date:		By:	Date:
				Designed	HLR	2/97
				Drawn	RJT	2/97
				Checked	AD	2/97
				In charge of:	RAL	

Maine Turnpike Authority
Maine Turnpike

Trans pass

FOREST AVENUE OVERPASS
ABUTMENT 2 - SB
MODIFICATIONS

HNTB
ARCHITECTS ENGINEERS PLANNERS

Contract 97.8

Sheet No. FA-8
52 of 133

METPK01A

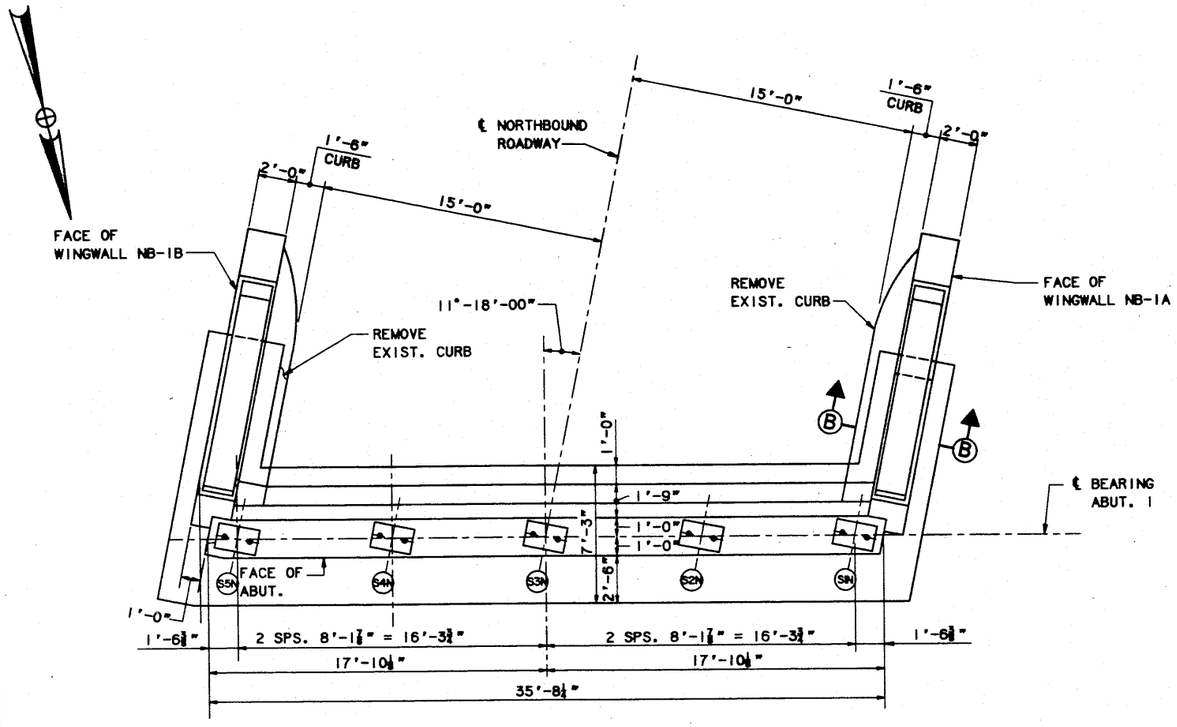

PLAN - ABUTMENT 1
¼"=1'-0"

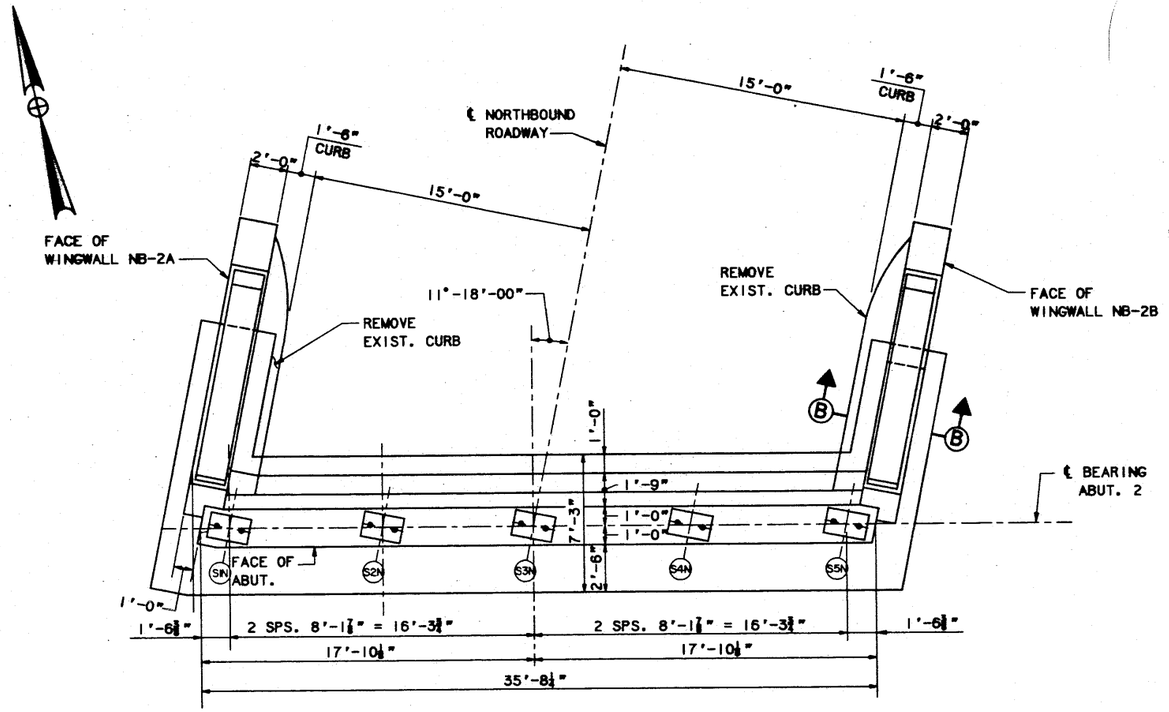

PLAN - ABUTMENT 2
¼"=1'-0"

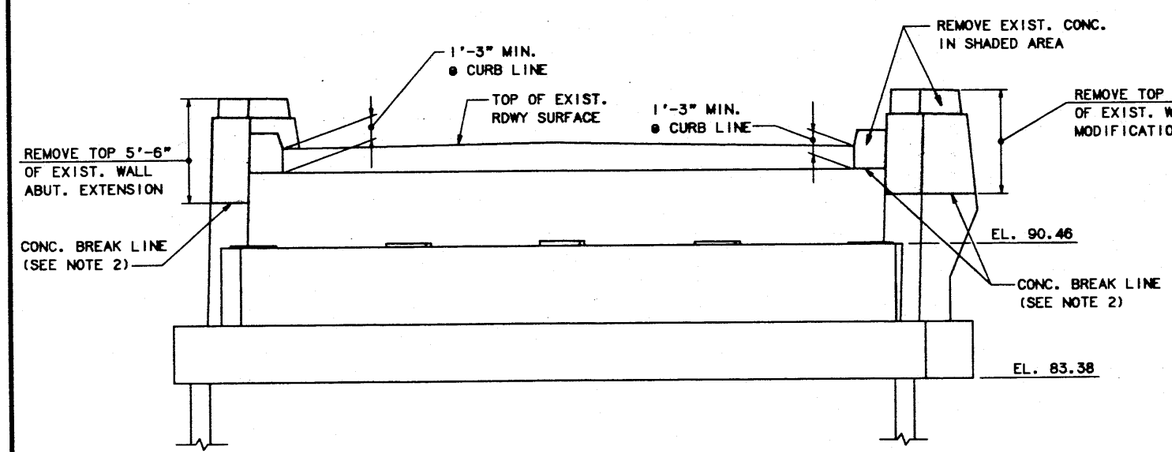

ELEVATION
¼" = 1'-0"

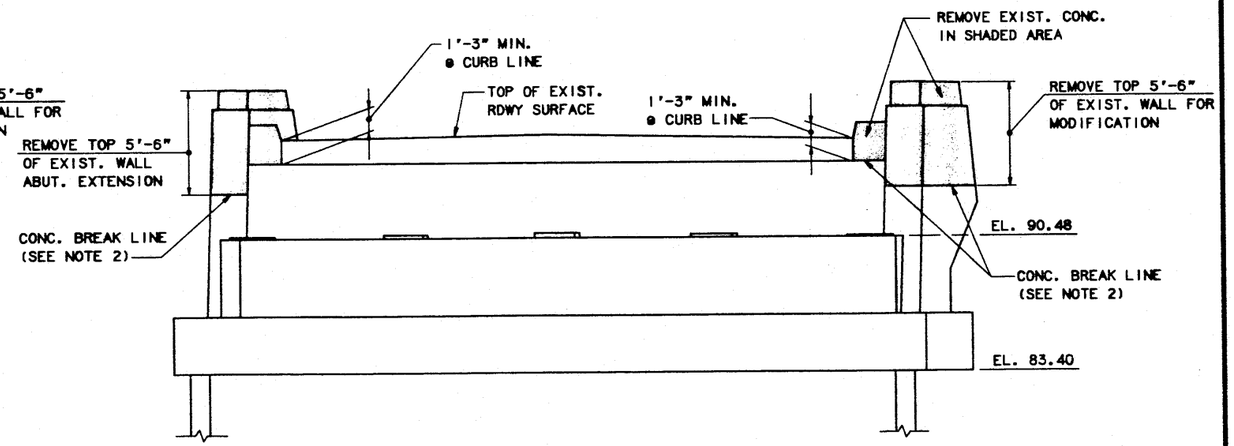

ELEVATION
¼" = 1'-0"

NOTES:

1. FOR NOTES, SEE SHEET NO. FA-10.
2. SAW CUT 1" MIN. DEEP BEFORE REMOVING EXISTING CONCRETE.
3. FOR MODIFICATION OF NB ABUTMENTS 1 AND 2, SEE SHEET NOS. FA-10 AND FA-11 RESPECTIFLY.

No.	Revision	By:	Date:		By:	Date:
				Designed	HLR	2/97
				Drawn	RJT	2/97
				Checked	AD	2/97
				In charge of:	RAL	

Maine Turnpike Authority
Maine Turnpike

Transpass

FOREST AVENUE OVERPASS

EXISTING NB ABUTMENTS

HNTB
ARCHITECTS ENGINEERS PLANNERS

Contract 97.8

Sheet No. FA-9
53 of 133

METPK01A

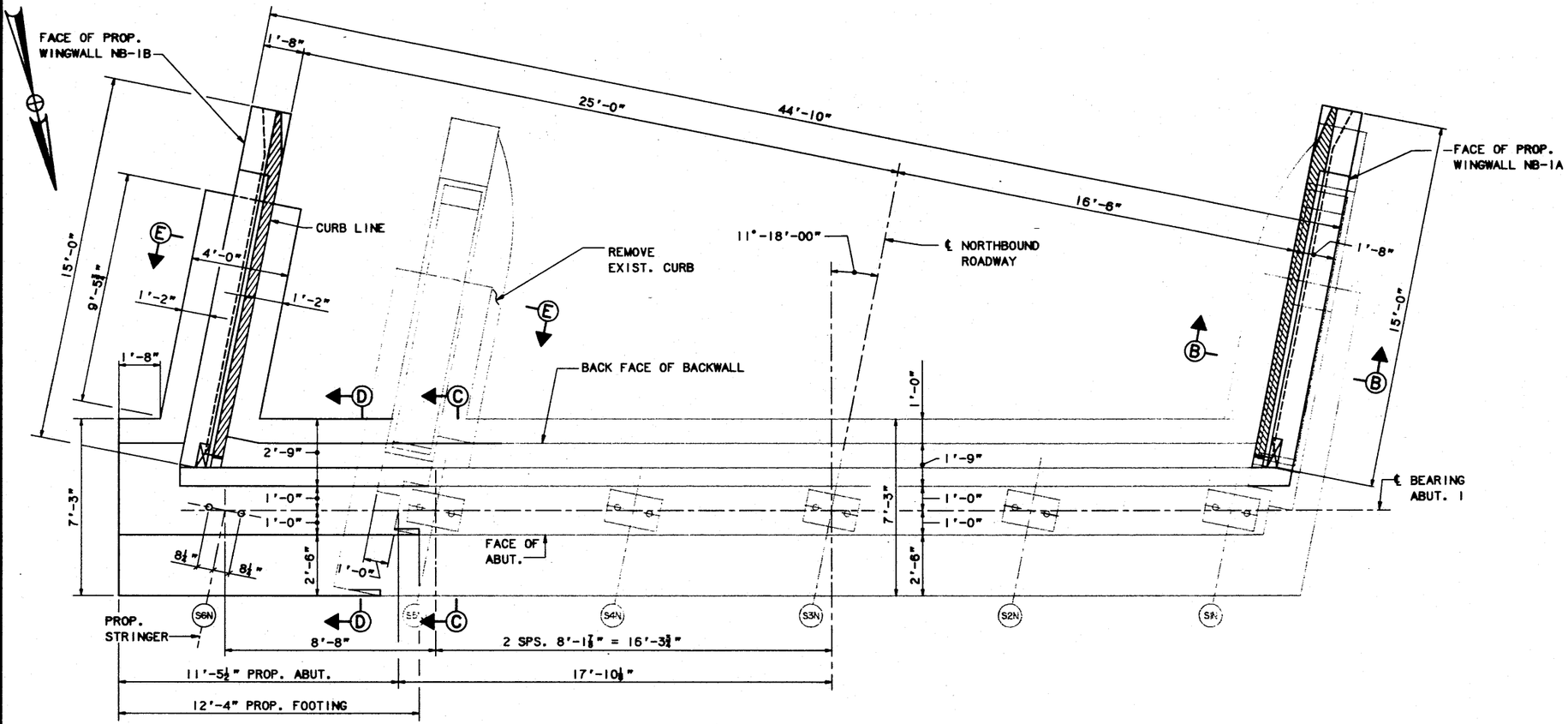

PLAN - ABUTMENT 1

¼"=1'-0"

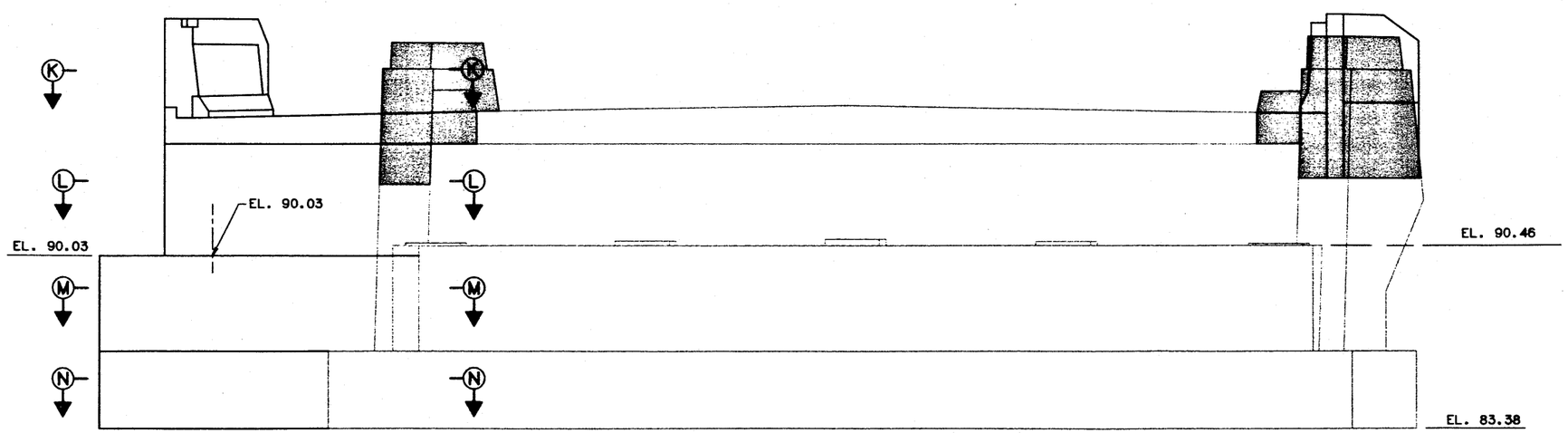

ELEVATION

¼" = 1'-0"

NOTES:

1. FOR PLAN AND ELEVATION OF EXISTING ABUTMENT 1, SEE SHEET NO. FA-9.
2. FOR SECTIONS C-C AND D-D, SEE SHEET NO. FA-11.
3. FOR SECTIONS L-L, M-M, N-N, SEE SHEET NO. FA-13.
4. FOR SECTIONS B-B, SEE SHEET FA-14 AND SECTIONS E-E, K-K, SEE SHEET NO. FA-12.
5. FOR ELEVATIONS OF WINGWALL NB-1A, SEE SHEET NO. FA-14.
6. FOR ELEVATIONS OF WINGWALL NB-1B, SEE SHEET NO. FA-13.

No.	Revision	By:	Date:		By:	Date:
				Designed	HLR	2/97
				Drawn	RJT	2/97
				Checked	AD	2/97
				In charge of:	RAL	

Maine Turnpike Authority
Maine Turnpike

Trans pass

FOREST AVENUE OVERPASS
ABUTMENT 1 - NB
MODIFICATIONS

HNTB
ARCHITECTS ENGINEERS PLANNERS

Contract 97.8

Sheet No. FA-10
54 of 133

METPK01A

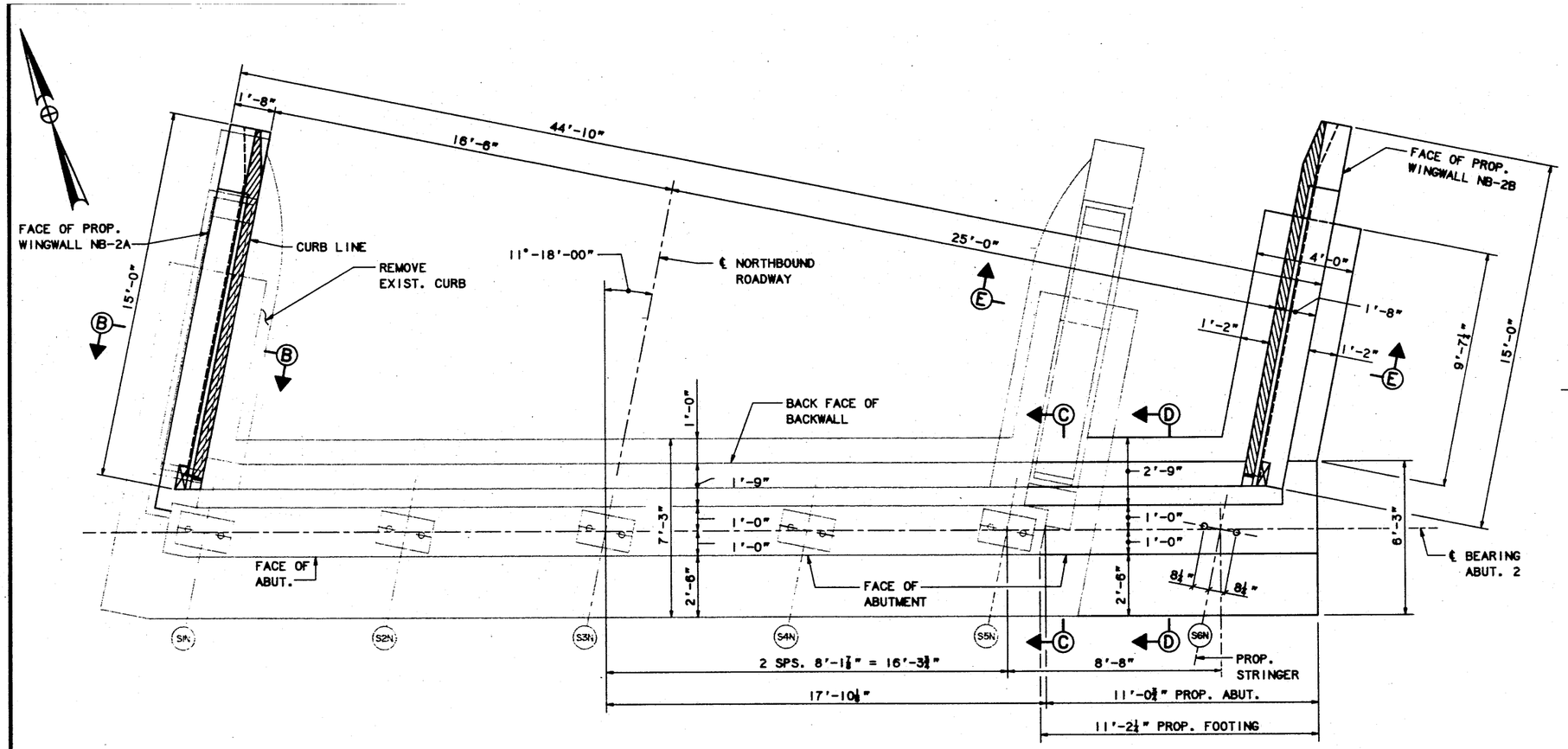

PLAN - ABUTMENT 2
⅛" = 1'-0"

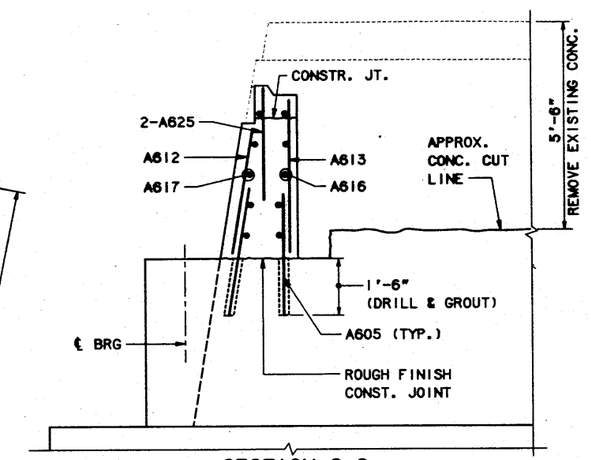

SECTION C-C
½" = 1'-0"

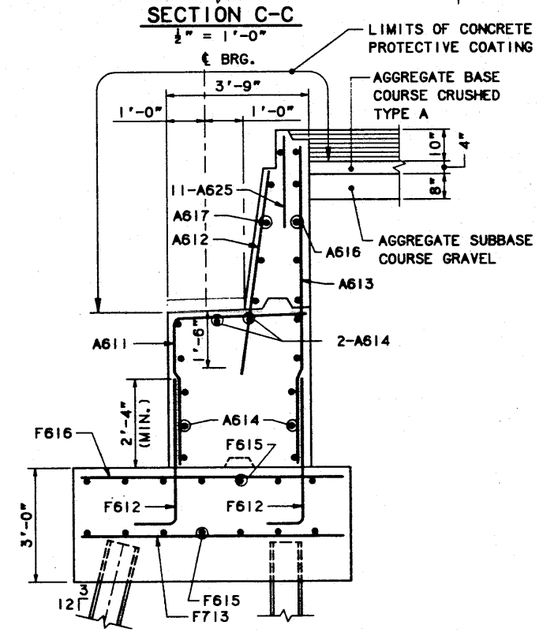

SECTION D-D
½" = 1'-0"

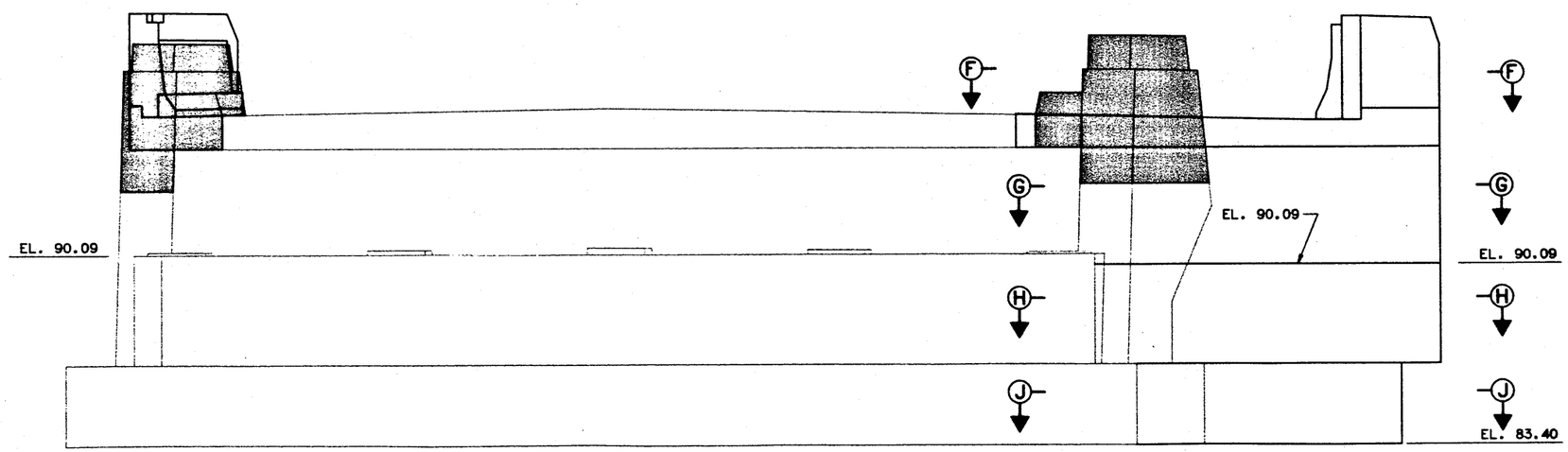

ELEVATION
⅛" = 1'-0"

NOTES:

1. FOR PLAN AND ELEVATION OF EXISTING ABUTMENT 2, SEE SHEET NO. FA-9.
2. FOR SECTIONS F-F, G-G, H-H, SEE SHEET NO. FA-13.
3. FOR SECTIONS B-B, SEE SHEET FA-14 AND SECTIONS E-E, K-K, SEE SHEET NO. FA-12.
4. FOR ELEVATIONS OF WINGWALL NB-2A, SEE SHEET NO. FA-14.
5. FOR ELEVATIONS OF WINGWALL NB-2B, SEE SHEET NO. FA-12.

No.	Revision	By:	Date:		By:	Date:
				Designed	HLR	2/97
				Drawn	RJT	2/97
				Checked	JMH	2/97
				In charge of:	RAL	

Maine Turnpike Authority
Maine Turnpike

Transpass

FOREST AVENUE OVERPASS
ABUTMENT 2 -NB
MODIFICATIONS

HNTB
ARCHITECTS ENGINEERS PLANNERS

Contract 97.8

Sheet No. FA-11
55 of 133

METPK01A

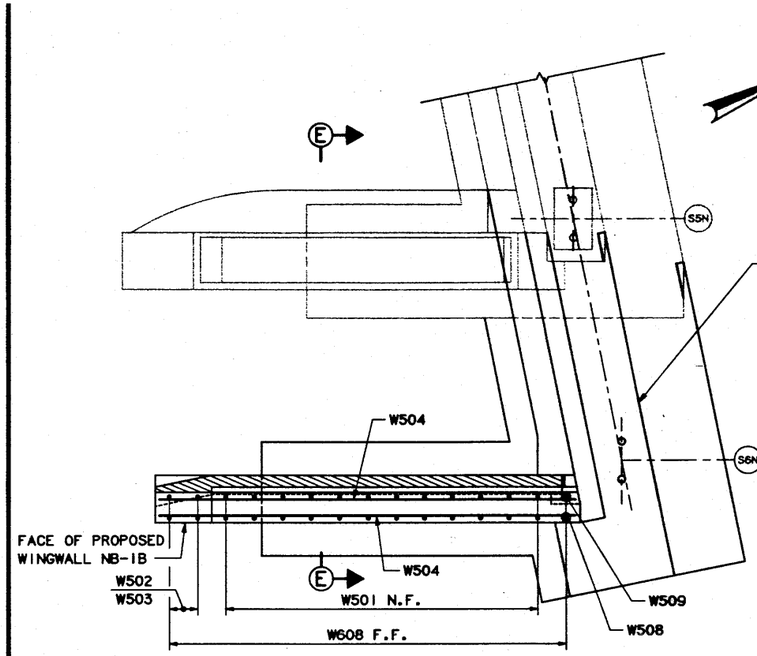

SECTION K-K - PROPOSED WINGWALL NB-1B AND SB-2B

WINGWALL NB-1B SHOWN, WINGWALL SB-2B SIMILAR

$\frac{3}{8}$"=1'-0"

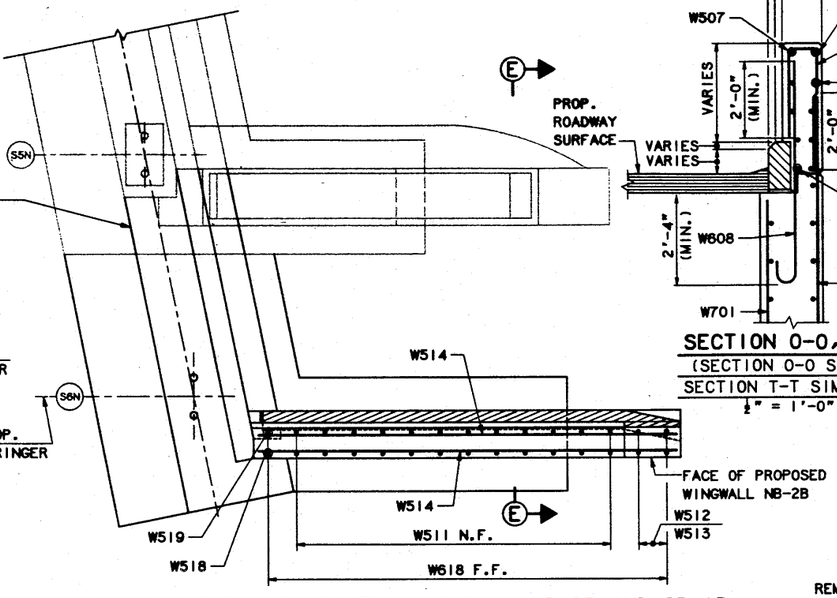

SECTION F-F - PROPOSED WING WALL NB-2B AND SB-1B

WINGWALL NB-2B SHOWN, WINGWALL SB-1B SIMILAR

$\frac{3}{8}$"=1'-0"

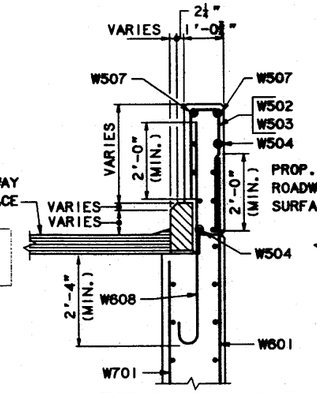

SECTION O-O, T-T

(SECTION O-O SHOWN, SECTION T-T SIMILAR)

$\frac{1}{2}$" = 1'-0"

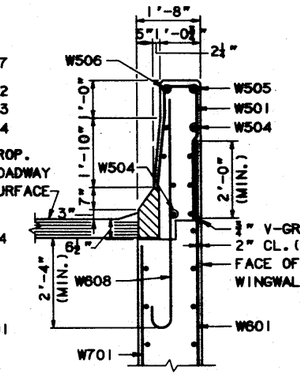

SECTION P-P, S-S

(SECTION P-P SHOWN, SECTION S-S SIMILAR)

$\frac{1}{2}$" = 1'-0"

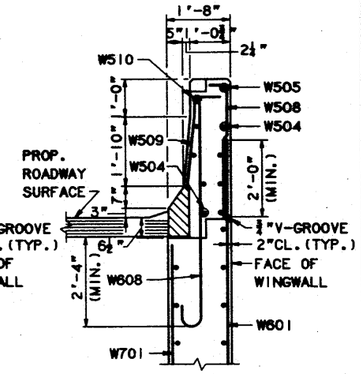

SECTION Q-Q, R-R

(SECTION Q-Q SHOWN, SECTION R-R SIMILAR)

$\frac{1}{2}$" = 1'-0"

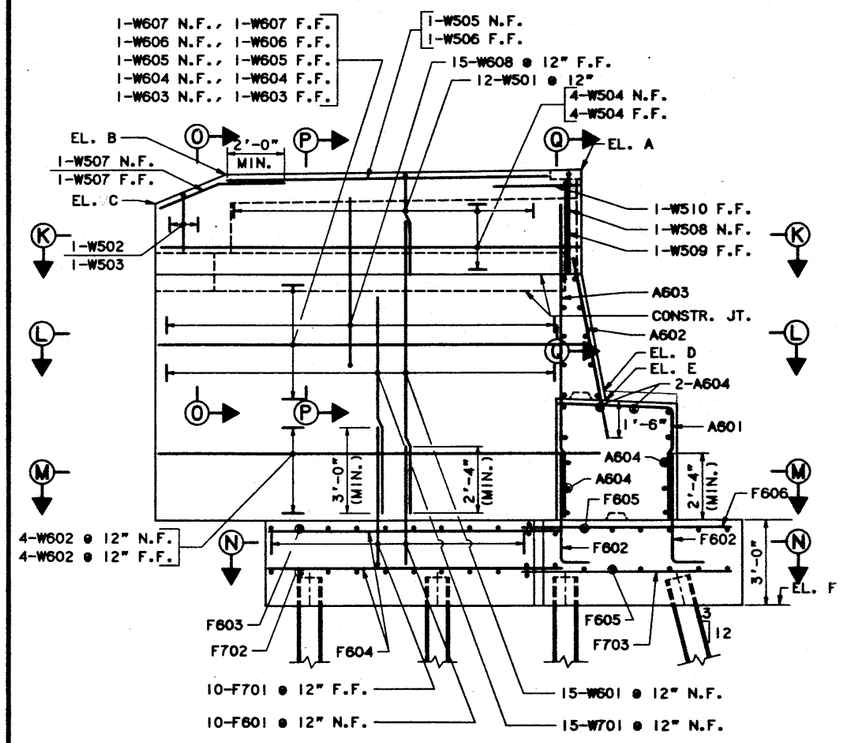

WINGWALL ELEVATION

$\frac{3}{8}$" = 1'-0"

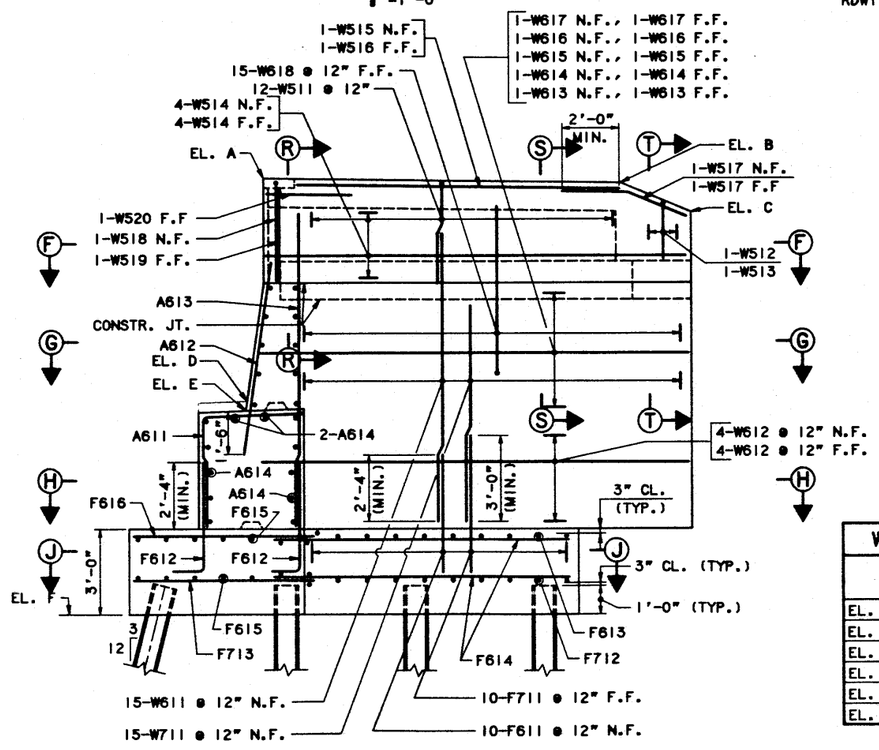

WINGWALL ELEVATION

$\frac{3}{8}$" = 1'-0"

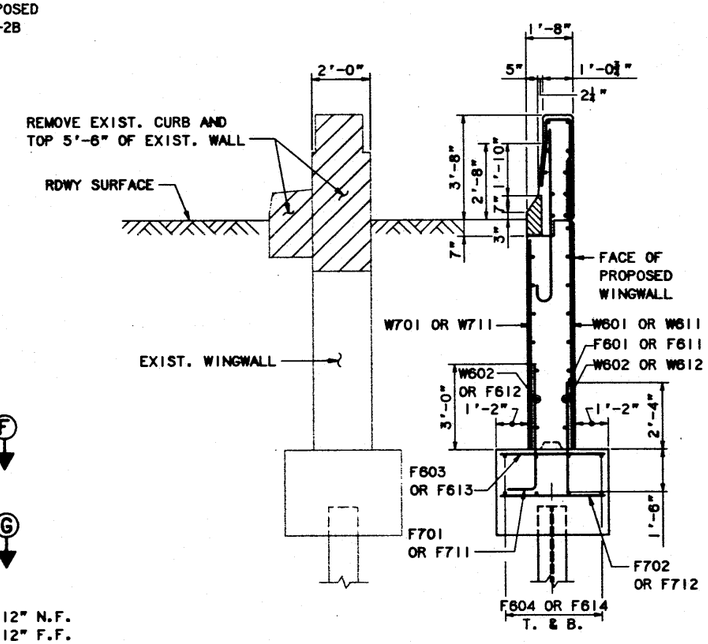

SECTION E-E

$\frac{3}{8}$" = 1'-0"

WINGWALL ELEVATIONS				
	NORTHBOUND		SOUTHBOUND	
	NB-1B	NB-2B	SB-1B	SB-2B
EL. A	98.79	98.85	98.76	98.89
EL. B	98.76	98.84	98.72	98.85
EL. C	97.76	97.83	97.72	97.85
EL. D	90.03	90.09	90.00	90.13
EL. E	90.52	90.42	90.48	90.46
EL. F	83.38	83.40	83.34	83.44

No.	Revision	By:	Date:		By:	Date:
				Designed	HLR	2/97
				Drawn	RJT	2/97
				Checked	JMH	2/97
				In charge of:	RAL	

Maine Turnpike Authority
Maine Turnpike

Trans pass

FOREST AVENUE OVERPASS

ABUTMENT DETAILS-I

HNTB
ARCHITECTS ENGINEERS PLANNERS

Contract 97.8

Sheet No. FA-12
56 of 133

METPK01A

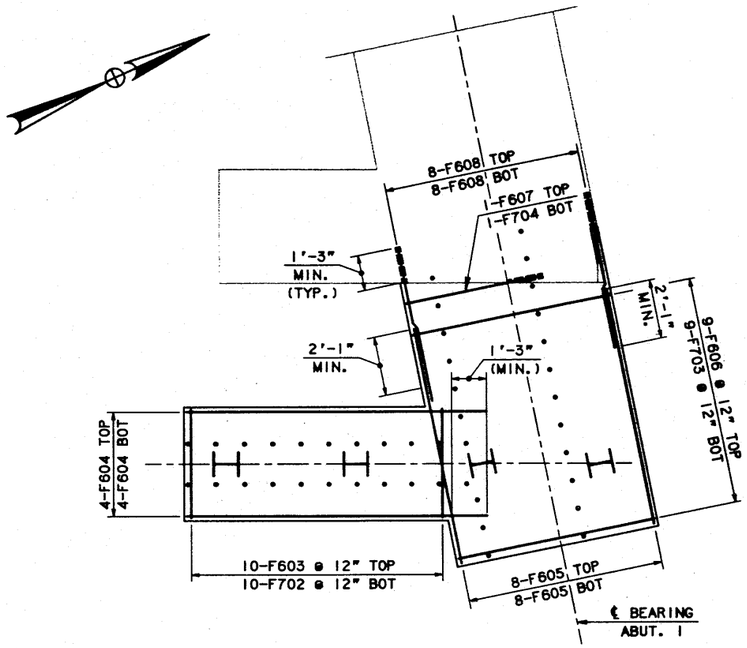

SECTION N-N - FOOTINGS AT ABUTMENT NB-1B AND, SB-2B

(ABUTMENT NB-1B SHOWN, ABUTMENT SB-2B SIMILAR)

3/8" = 1'-0"

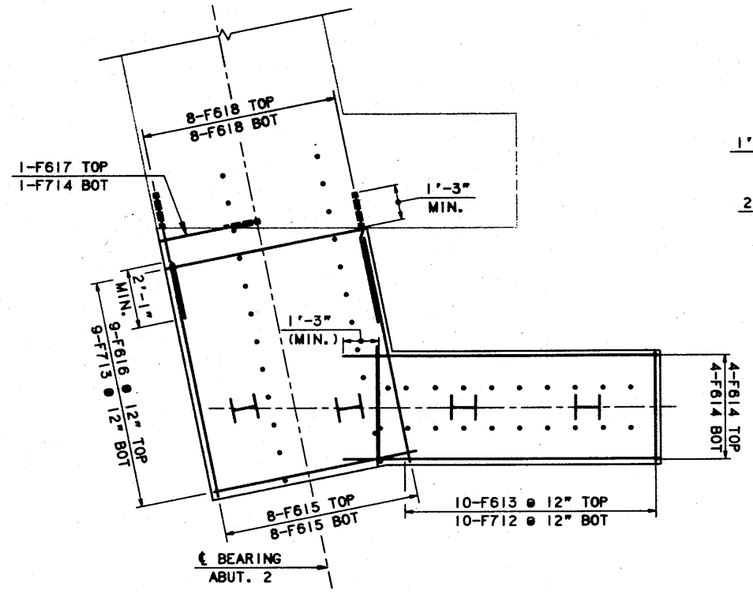

SECTION J-J - FOOTING AT ABUTMENTS NB-2B AND, SB-1B

(ABUTMENT NB-2B SHOWN, ABUTMENT SB-1B SIMILAR)

3/8" = 1'-0"

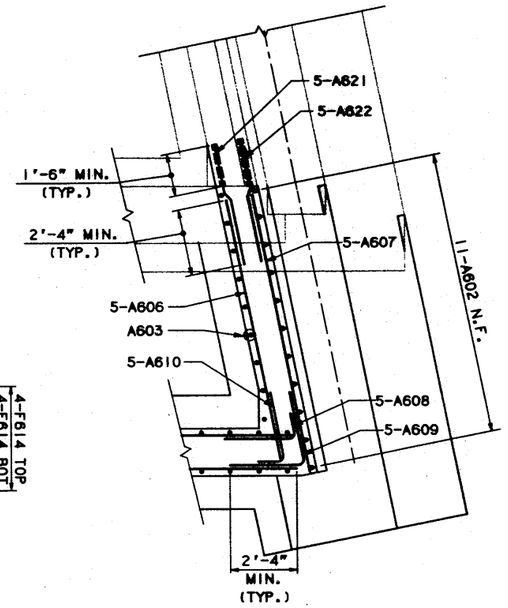

SECTION L-L

1/8"=1'-0"

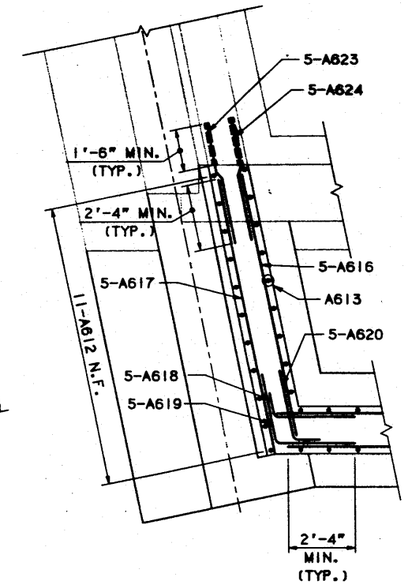

SECTION G-G

1/8"=1'-0"

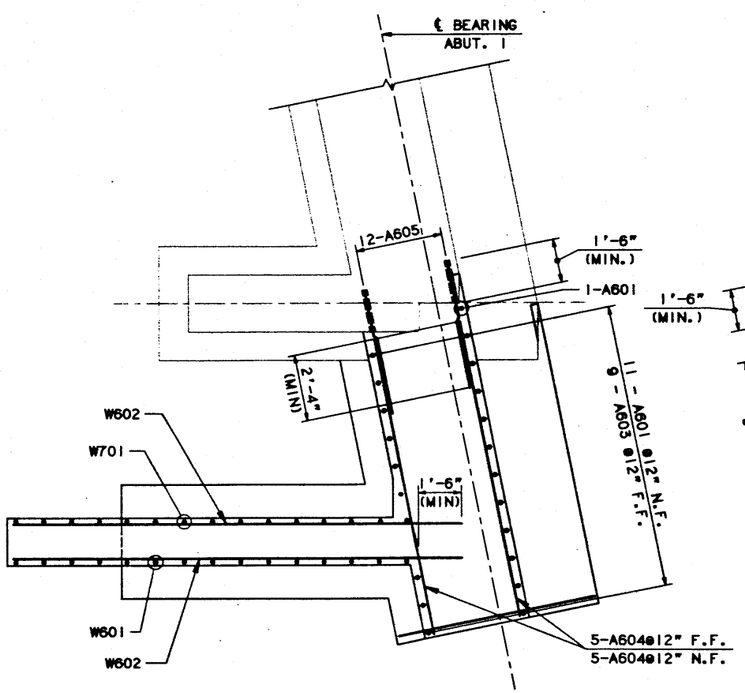

SECTION M-M - ABUTMENTS NB-1B AND, SB-2B

(ABUTMENT NB-1B SHOWN, ABUTMENT SB-2B SIMILAR)

3/8" = 1'-0"

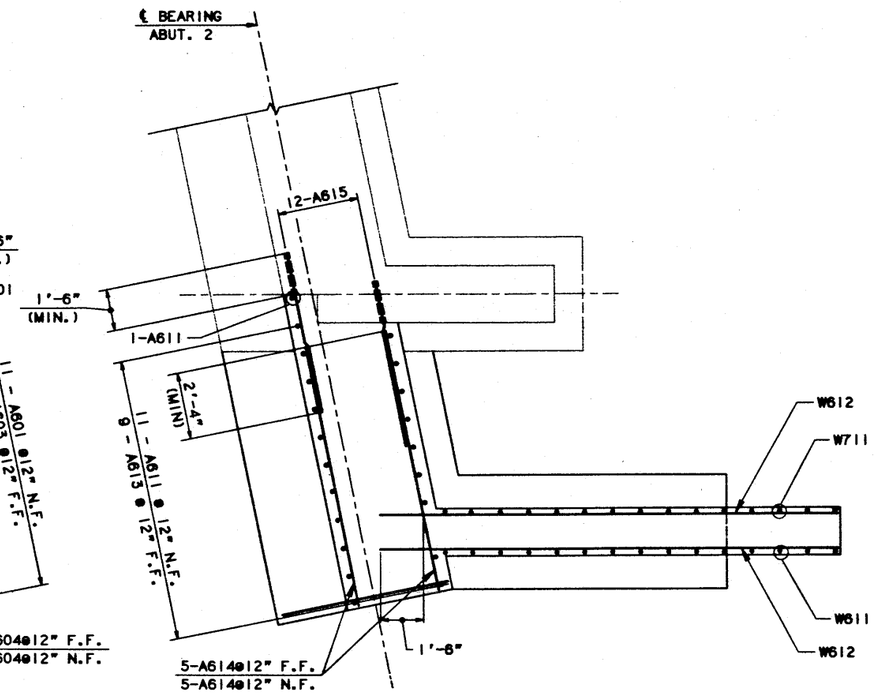

SECTION H-H - ABUTMENTS NB-2B AND, SB-1B

(ABUTMENT NB-2B SHOWN, ABUTMENT SB-1B SIMILAR)

3/8" = 1'-0"

No.	Revision	By:	Date:		By:	Date:
				Designed	HLR	2/97
				Drawn	RJT	2/97
				Checked	JMH	2/97
				In charge of:	RAL	

Maine Turnpike Authority

Maine Turnpike

Trans Compass

FOREST AVENUE OVERPASS

ABUTMENT DETAILS II

HNTB

ARCHITECTS ENGINEERS PLANNERS

Contract 97.8

Sheet No. FA-13

57 of 133

METPK01A

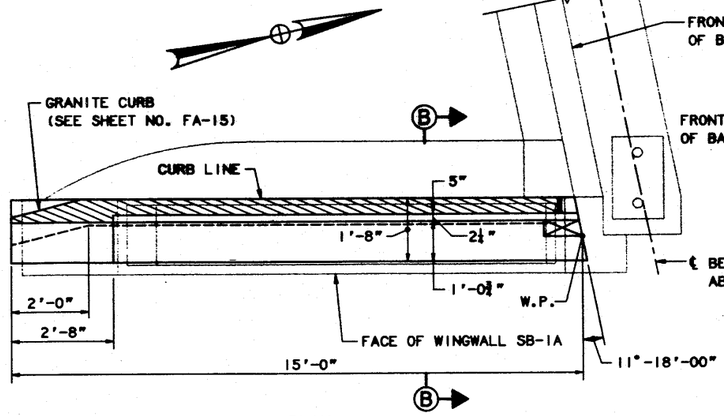

PLAN

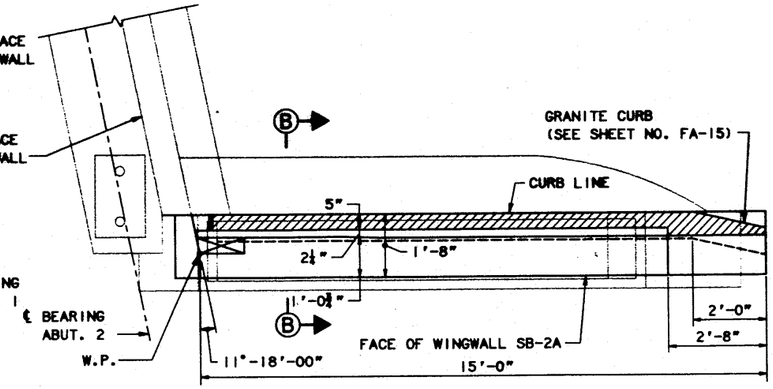

PLAN

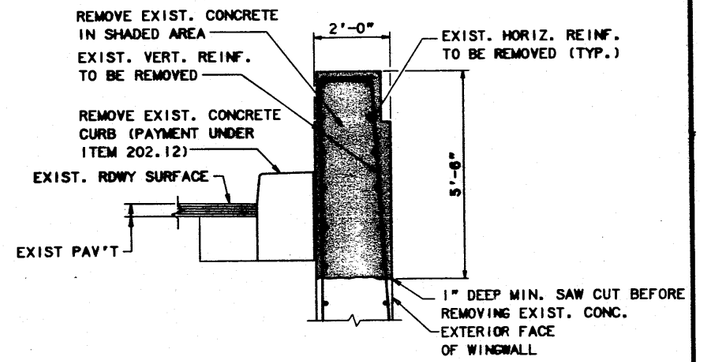

EXISTING SECTION B-B

½" = 1'-0"

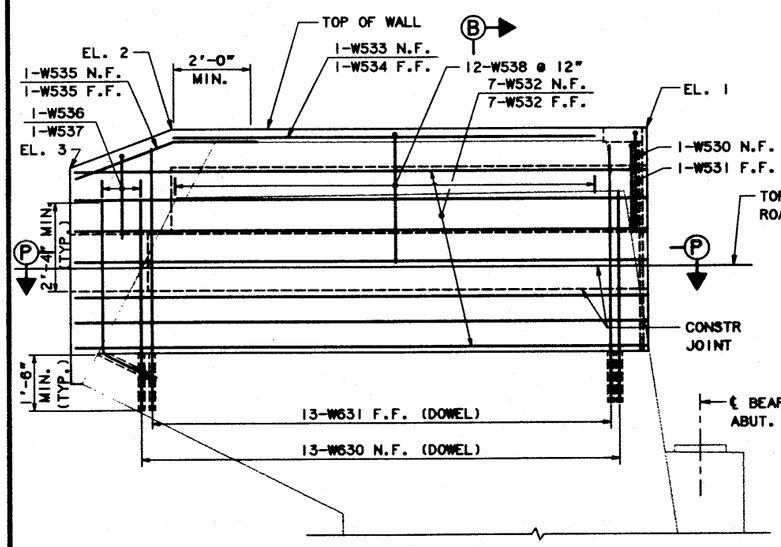

ELEVATION

WINGWALL SB-1A AND NB-2A

WINGWALL SB-1A SHOWN, WINGWALL NB-2A SIMILAR

½" = 1'-0"

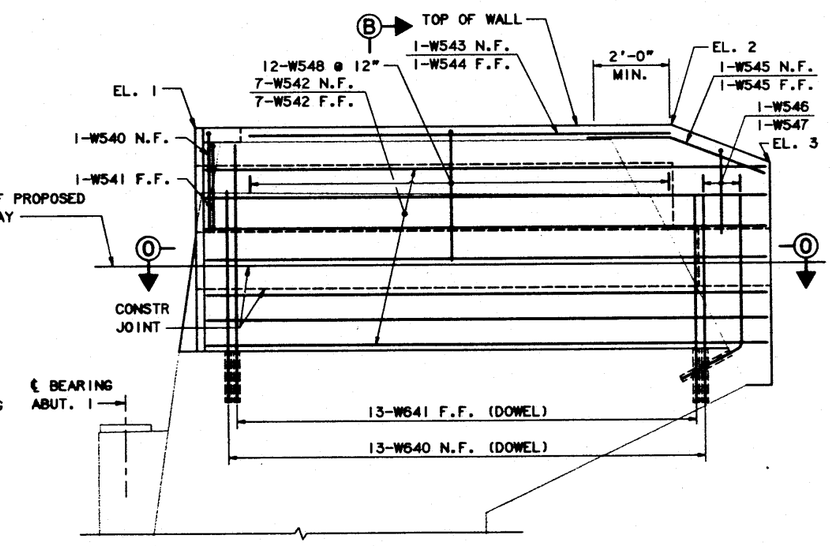

ELEVATION

WINGWALL SB-2A AND NB-1A

WINGWALL SB-2A SHOWN, WINGWALL NB-1A SIMILAR

½" = 1'-0"

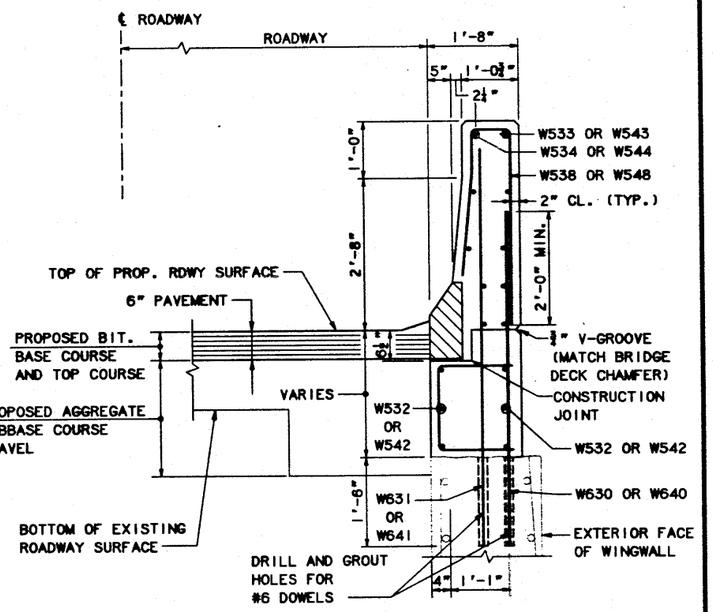

PROPOSED SECTION B-B

½" = 1'-0"

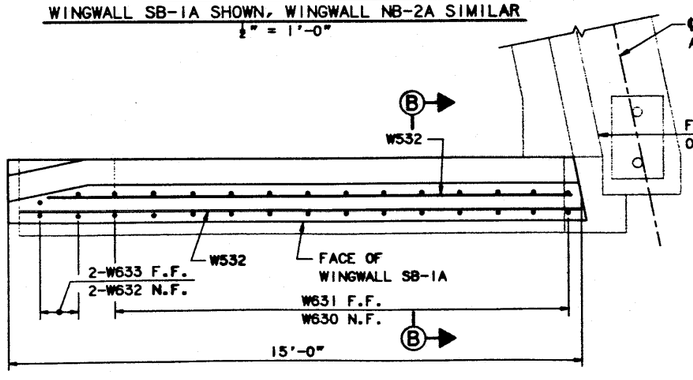

SECTION P-P

½" = 1'-0"

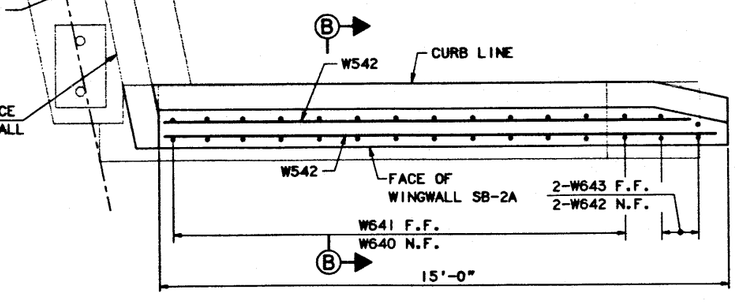

SECTION O-O

½" = 1'-0"

NOTES

1. FOR GRANITE CURB DETAILS, SEE SHEET NO. FA-15.

WINGWALL ELEVATIONS				
	NORTHBOUND		SOUTHBOUND	
	NB-1A	NB-2A	SB-1A	SB-2A
EL. 1	98.97	99.05	98.97	99.06
EL. 2	98.94	98.97	98.94	99.02
EL. 3	97.93	97.97	97.93	98.01

No.	Revision	By:	Date:		By:	Date:
				Designed	HLR	2/97
				Drawn	RJT	2/97
				Checked	JMH	2/97
				In charge of:	RAL	

Maine Turnpike Authority
Maine Turnpike

Trans Compass

FOREST AVENUE OVERPASS

WINGWALL
MODIFICATIONS I

HNTB
ARCHITECTS ENGINEERS PLANNERS

Contract 97.8

Sheet No. FA-14
58 of 133

METPKOIA

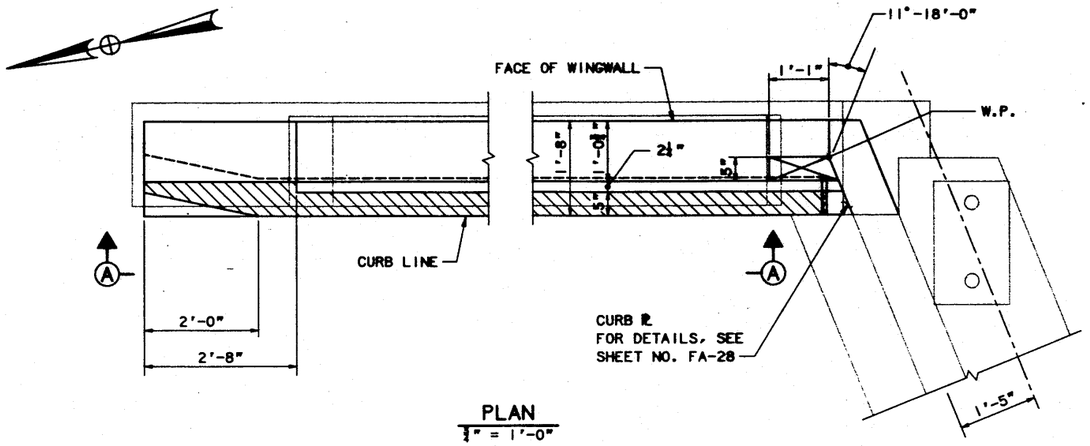

PLAN
¼" = 1'-0"

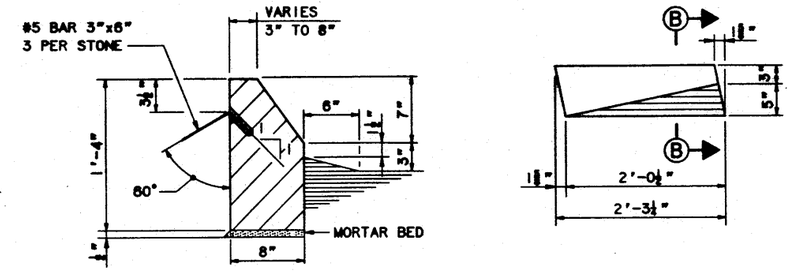

SECTION B-B
1½" = 1'-0"

PLAN AT END POST
1" = 1'-0"

TYPICAL WINGWALL GRANITE CURB

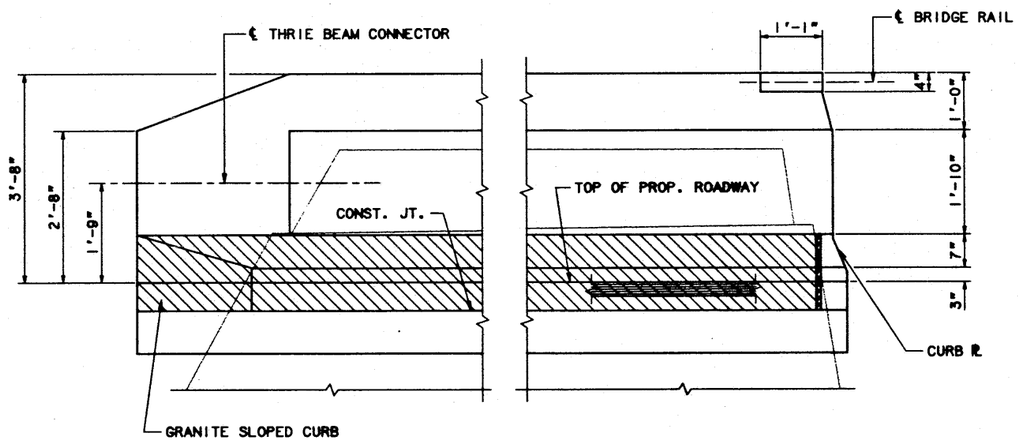

SECTION B-B
¼" = 1'-0"

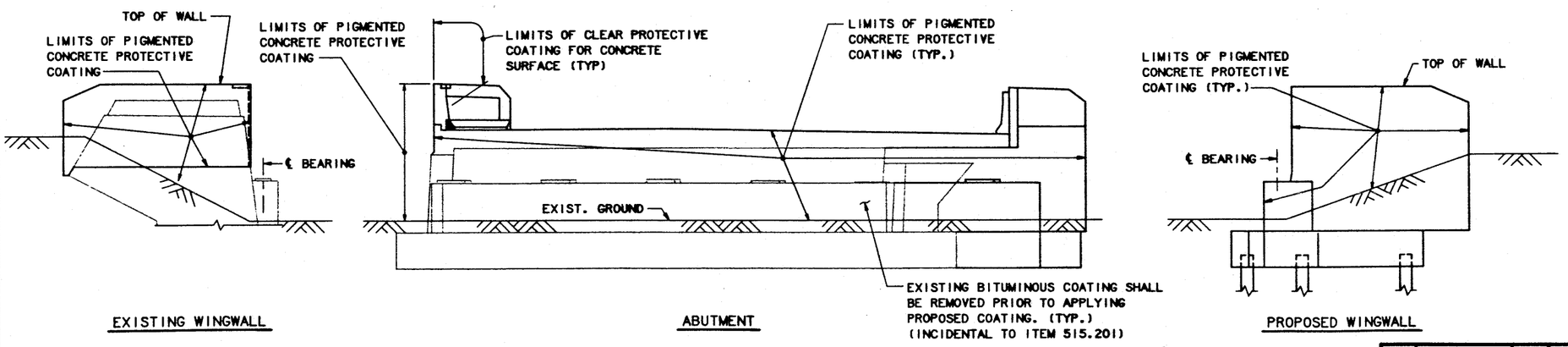

EXISTING WINGWALL

ABUTMENT

PROPOSED WINGWALL

LIMITS OF CONCRETE PROTECTIVE COATING
AT ABUTMENT AND WINGWALLS
⅛" = 1'-0"

No.	Revision	By:	Date:		By:	Date:
				Designed	HLR	2/97
				Drawn	RJT	2/97
				Checked	AD	2/97
				In charge of:	RAL	

Maine Turnpike Authority
Maine Turnpike

Trans pass

FOREST AVENUE OVERPASS
WINGWALL
MODIFICATIONS II

HNTB
ARCHITECTS ENGINEERS PLANNERS

Contract 97.8

Sheet No. FA-15
59 of 133

METPK01A

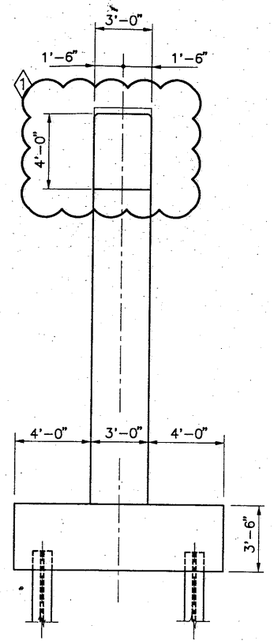

PROPOSED
END ELEVATION
1/4"=1'-0"

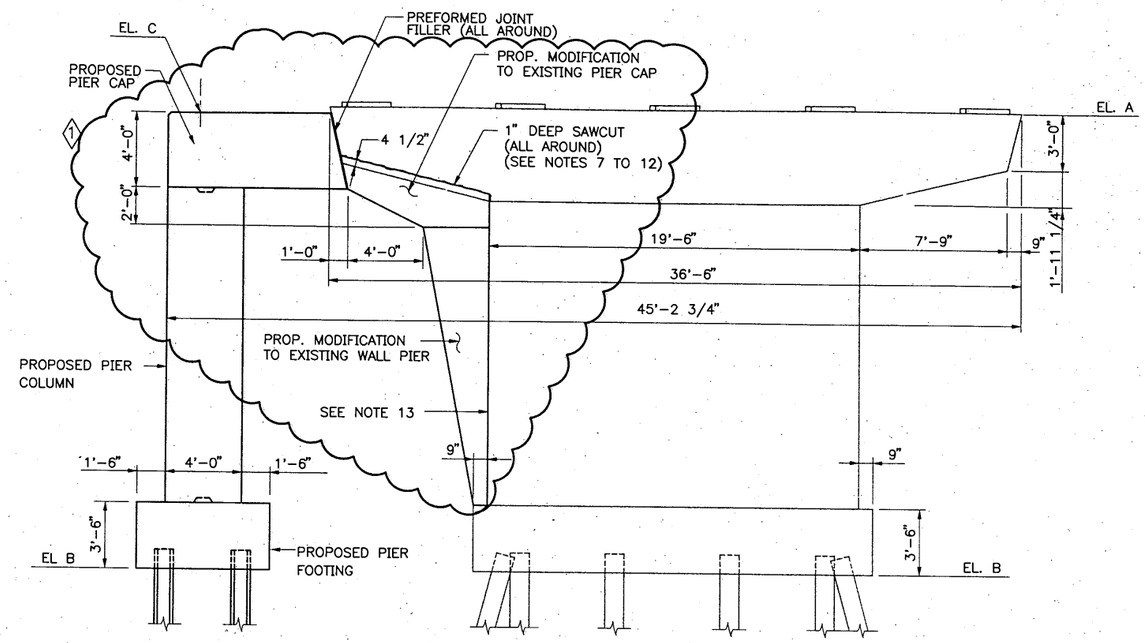

ELEVATION – SB PIER 1 AND PIER 2
(LOOKING UPSTATION)
1/4"=1'-0"

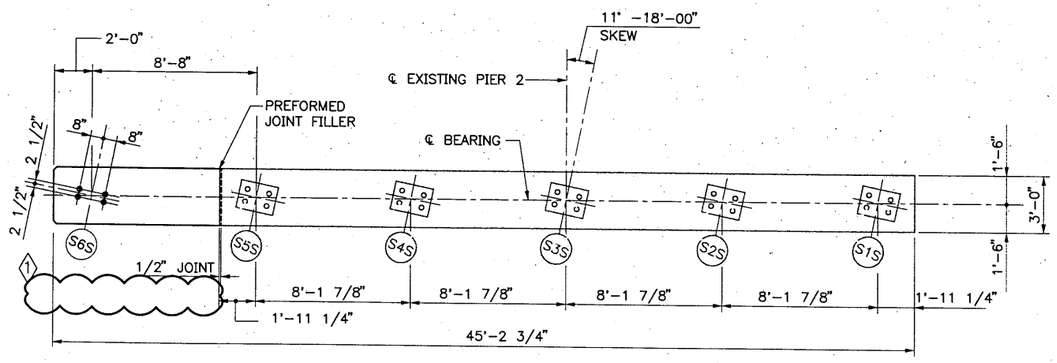

PLAN – SB PIER 2
1/4"=1'-0"

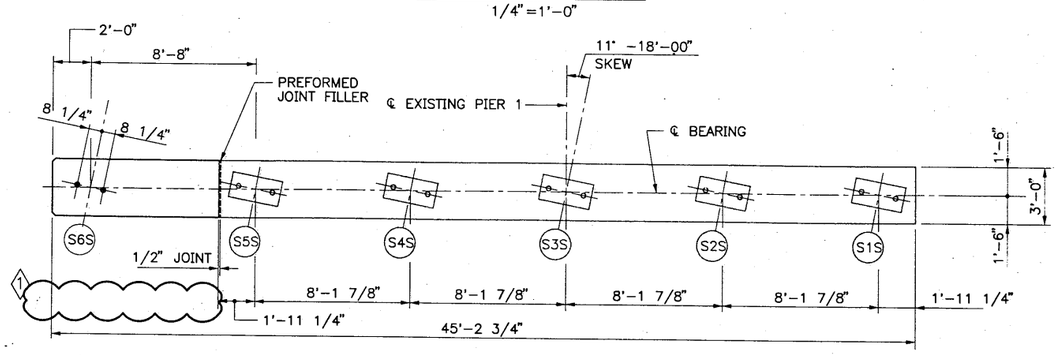

PLAN – SB PIER 1
1/4"=1'-0"

NOTES

1. FOR PIER AND FOOTING REINFORCEMENT DETAILS, SEE SHEET FA-17.
2. PAD ELEVATIONS SHOWN ARE BASED ON THE TYPE OF BEARINGS SHOWN ON SHEET FA-23. IF ACTUAL BEARING DIMENSIONS CHANGE, THE AFFECTED DETAILS AND ELEVATIONS SHALL BE ADJUSTED TO ACCOMMODATE THE BEARINGS SUPPLIED.
3. LIMIT OF PIER EXCAVATION SHALL BE 1'-6" BEYOND EDGE OF PROPOSED PIER FOOTINGS RESPECTIVELY AND BE PAID FOR UNDER ITEM 206.10.
4. PIGMENTED CONCRETE PROTECTIVE COATING (ITEM 515.201) SHALL BE APPLIED ALL AROUND THE PROPOSED PIER COLUMNS AND PIER CAP.
5. PREFORMED JOINT FILLER SHALL CONFORM TO ASTM DESIGNATION D1751.
6. THE EXISTING PIERS SHALL BE COMPLETELY COATED WITH PIGMENTED CONCRETE PROTECTIVE COATING WITH THE EXCEPTION OF THE SHAFT FACE ON THE NONTRAFFIC SIDE.
7. REMOVE EXISTING CONCRETE ONE INCH MINIMUM UNDER EXISTING REINFORCING STEEL OR TO SOUND CONCRETE. CONTRACTOR SHALL BE CAREFUL NOT TO DAMAGE ANY OF THE EXISTING REINFORCING BARS WHICH SHALL BE KEPT IN PLACE. ANY EXISTING REINFORCING STEEL, DETERMINED BY THE ENGINEER TO BE DAMAGED, SHALL BE REPAIRED BY THE CONTRACTOR AT NO EXPENSE TO THE AUTHORITY. CONTRACTOR SHALL THEN SUBMIT A METHOD OF REPAIR TO THE ENGINEER FOR APPROVAL.
8. REMOVE ALL CONCRETE AROUND THE FULL CIRCUMFERENCE OF THE EXPOSED REINFORCING STEEL. CLEAN THE BARS OF ALL BOND INHIBITING MATERIAL WITH AN ACCEPTABLE CLEANING METHOD APPROVED OF BY THE ENGINEER.
9. APPLY SIKA ARMATEC 110 TO ALL EXPOSED EXISTING REINFORCING STEEL, ONCE BARS ARE CLEAN, AS DETERMINED BY THE ENGINEER.
10. PREPARE THE EXISTING PIER CAP EDGE SURFACE TO BE SOUND, CLEAN AND FREE OF BOND INHIBITING MATERIALS. ANY CONCRETE AREAS FOUND TO BE UNSOUND, SHALL BE RE-CHIPPED BY THE CONTRACTOR, UNTIL APPROVED OF BY THE ENGINEER.
11. APPLY A BONDING AGENT, APPROVED OF BY THE ENGINEER, TO THE EXISTING PIER CAP EDGE SURFACE, BY FOLLOWING THE MANUFACTURER'S INSTRUCTIONS.
12. PAYMENT FOR SAWCUTTING, REMOVING PIER CAP CONCRETE, CLEANING PIER CAP SURFACE AND EXISTING EXPOSED REINFORCING BARS, AND PROVIDING THEN APPLYING THE BONDING AGENT SHALL BE INCIDENTAL TO ITEM 502.23.
13. ABRASIVE BLAST CLEAN CONCRETE SURFACE FROM BOTTOM OF PIER CAP TO TOP OF FOOTING, BY A METHOD APPROVED OF BY THE ENGINEER, THEN COAT WITH A BONDING AGENT. SIMILAR TO NOTE 12 PAYMENT SHALL BE INCIDENTAL TO ITEM 502.23.

ELEVATIONS		
POINT	SOUTHBOUND	
	PIER 1	PIER 2
A	90.28	90.62
B	66.50	66.50
C	90.13	90.52

THIS SHEET REVISED 2/28/97

No.	Revision	By	Date		By	Date
				Designed	KJG	2/97
				Drawn	RJT	2/97
1	MODIFICATIONS TO PROP AND EXIST. PIERS	HLR	2/28/97	Checked	HLR	2/97
				In Charge Of:	RAL	

Maine Turnpike Authority
Maine Turnpike

Trans pass

FOREST AVENUE OVERPASS
PIER – SB
MODIFICATIONS I

HNTB
ARCHITECTS ENGINEERS PLANNERS

Contract 97.8

Sheet No. FA-16
60 of 133

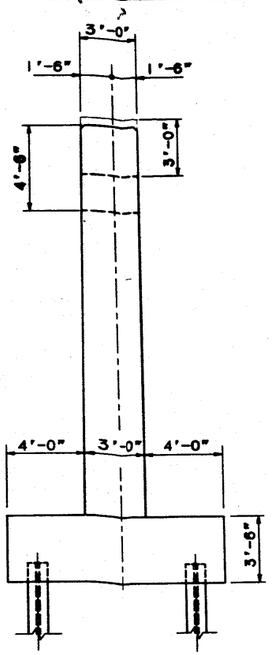

PROPOSED END ELEVATION
1/4" = 1'-0"

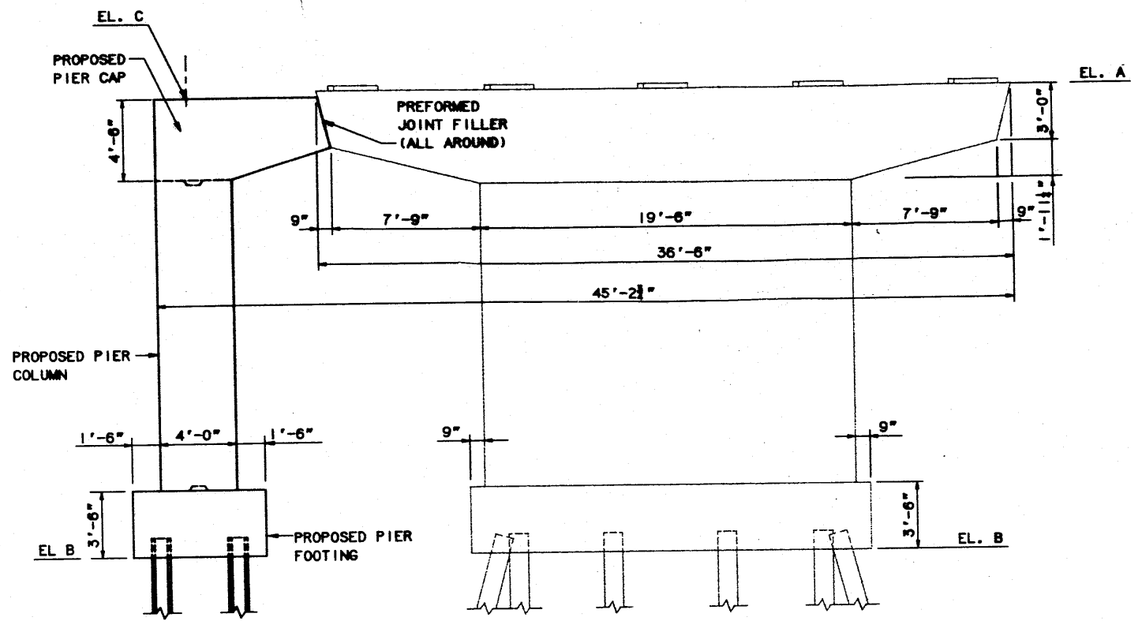

ELEVATION - SB PIER 1 AND PIER 2
(LOOKING UPSTATION)
1/4" = 1'-0"

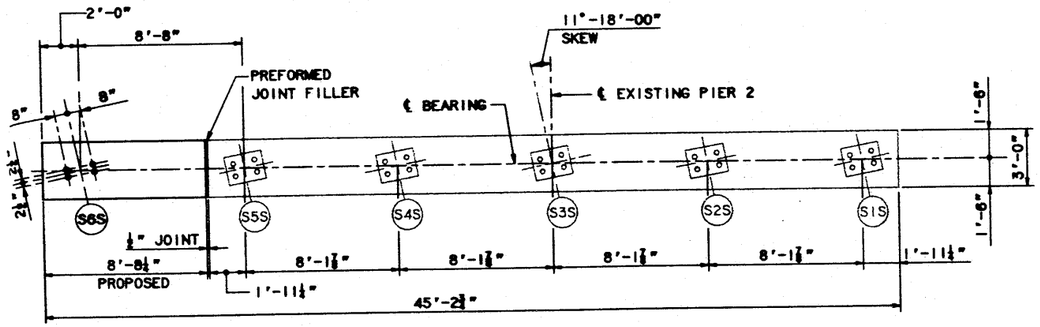

PLAN - SB PIER 2
1/4"=1'-0"

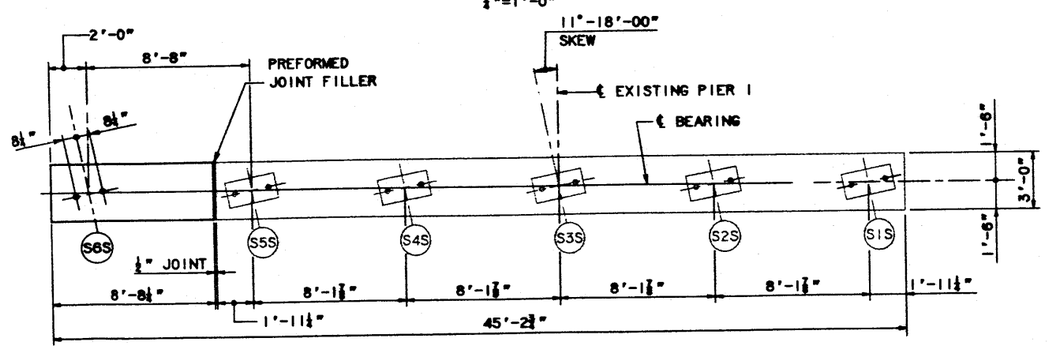

PLAN - SB PIER 1
1/4"=1'-0"

NOTES:

1. FOR PIER AND FOOTING REINFORCEMENT DETAILS, SEE SHEET FA-17.

ELEVATIONS		
POINT	SOUTHBOUND	
	PIER 1	PIER 2
A	90.28	90.62
B	66.50	66.50
C	90.13	90.52

No.	Revision	By:	Date:		By:	Date:
				Designed	KJG	2/97
				Drawn	RJT	2/97
				Checked	HLR	2/97
				In charge of:	RAL	

Maine Turnpike Authority
Maine Turnpike

FOREST AVENUE OVERPASS
PIER - SB
MODIFICATIONS I

HNTB
ARCHITECTS ENGINEERS PLANNERS

Contract 97.8

Sheet No. FA-16
60 of 133

METPK01A

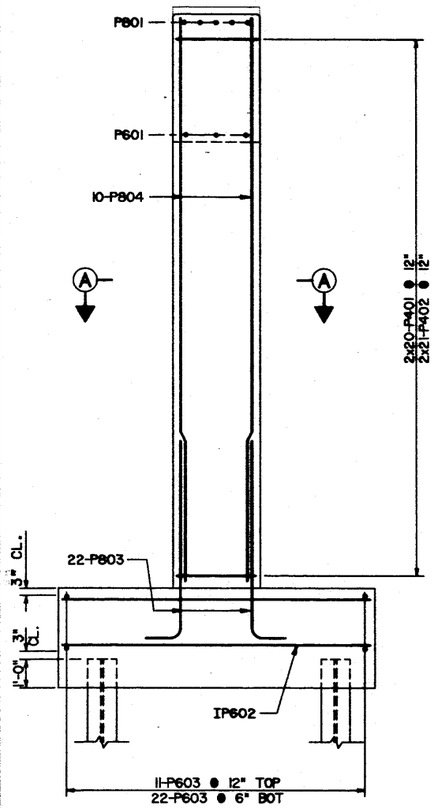

SECTION C-C
3/8" = 1'-0"

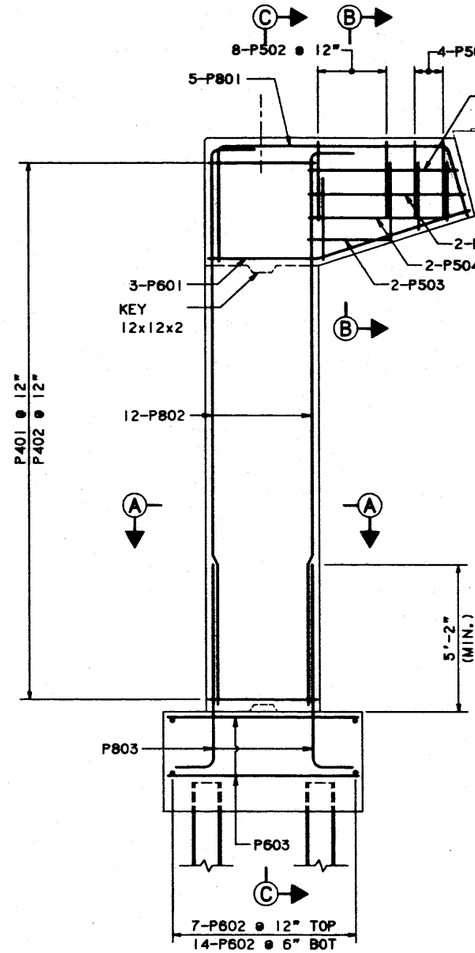

ELEVATION - NB PIER 1 AND PIER 2
(LOOKING UPSTATION)
1/8" = 1'-0"

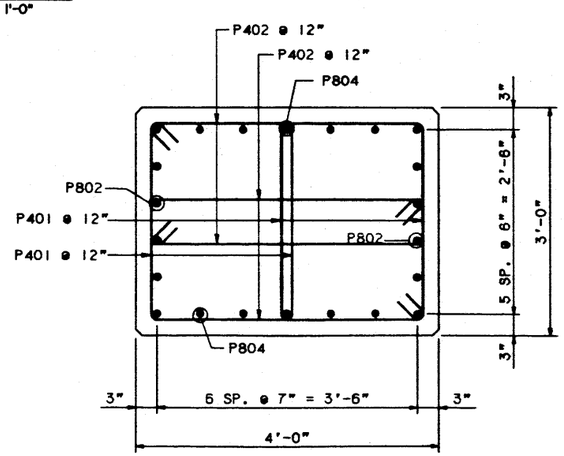

SECTION A-A
1" = 1'-0"

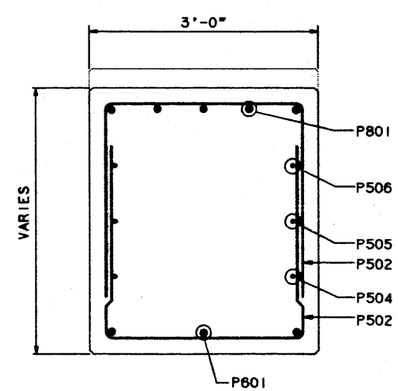

SECTION B-B
1" = 1'-0"

NOTES

1. FOR REINFORCING STEEL SCHEDULE, SEE SHEET FA-38.
2. ALL REINFORCING STEEL SHALL HAVE 2 INCH CLEAR COVER UNLESS NOTED OTHERWISE.

No.	Revision	By:	Date:		By:	Date:
				Designed	KJG	2/97
				Drawn	RJT	2/97
				Checked	HLR	2/97
				In charge of:	RAL	

Maine Turnpike Authority
Maine Turnpike

Transpass

FOREST AVENUE OVERPASS
PIER - SB
MODIFICATIONS II

HNTB
ARCHITECTS ENGINEERS PLANNERS

Contract 97.8

Sheet No. FA-17
61 of 133

METPK01A

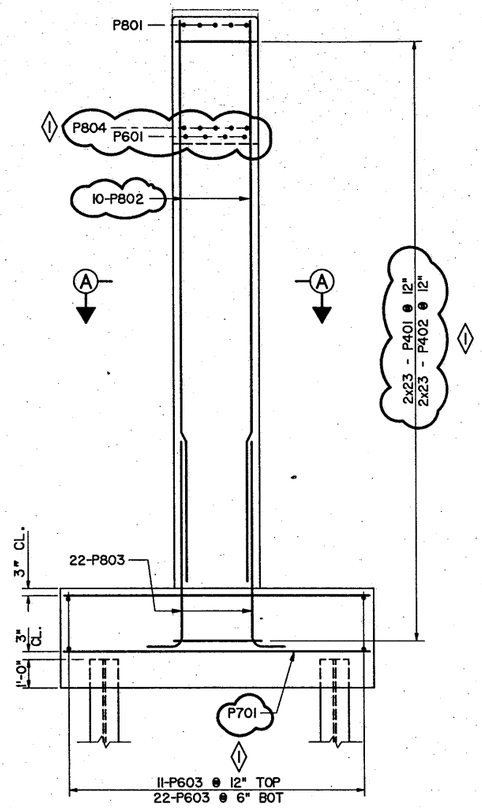

SECTION C-C
3/8" = 1'-0"

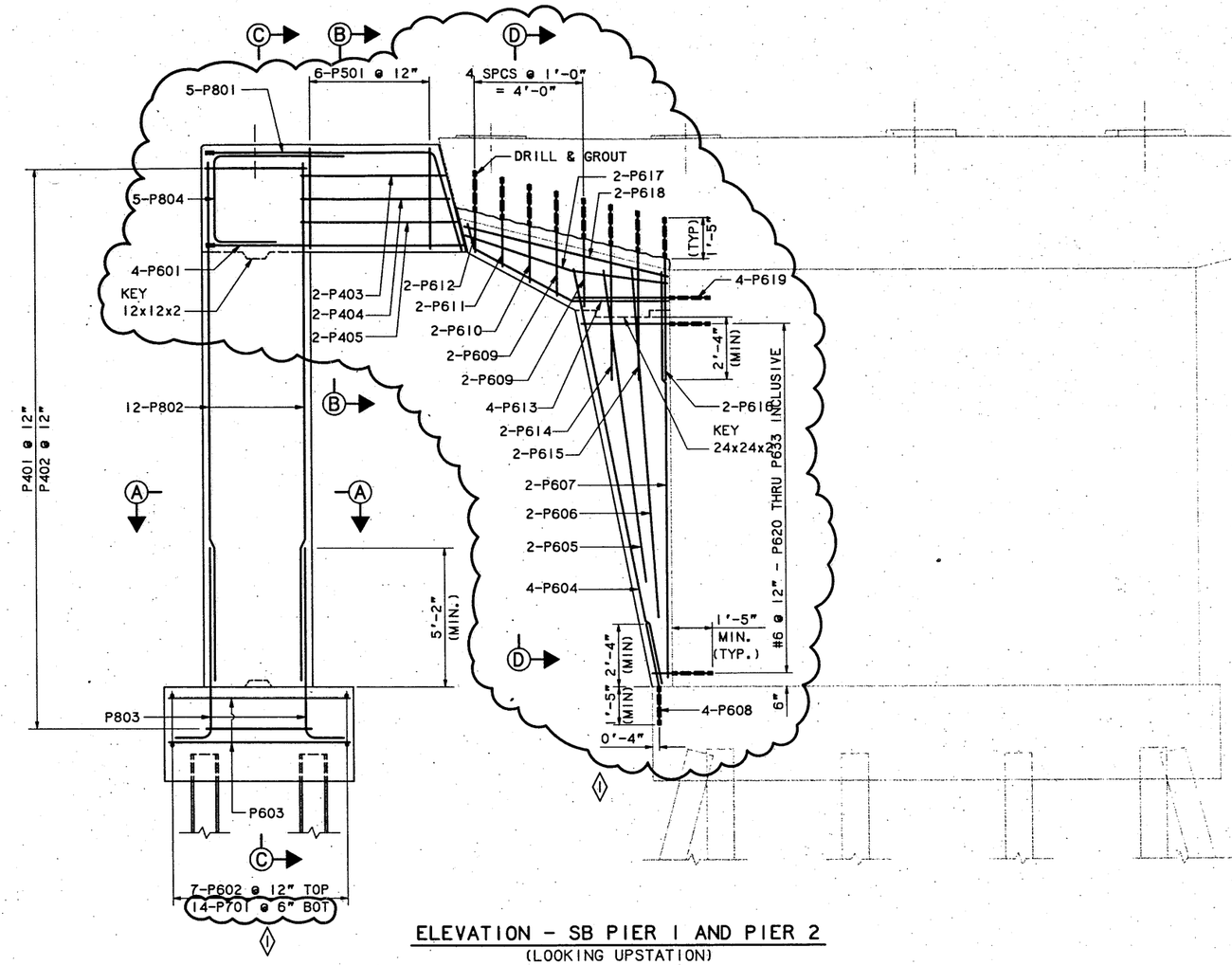

ELEVATION - SB PIER 1 AND PIER 2
(LOOKING UPSTATION)
3/8" = 1'-0"

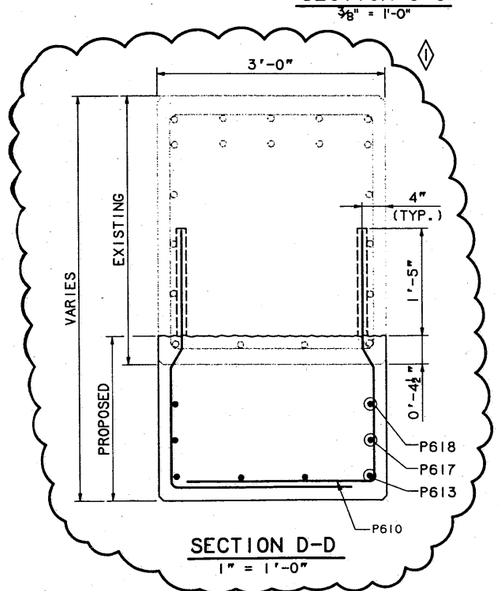

SECTION D-D
1" = 1'-0"

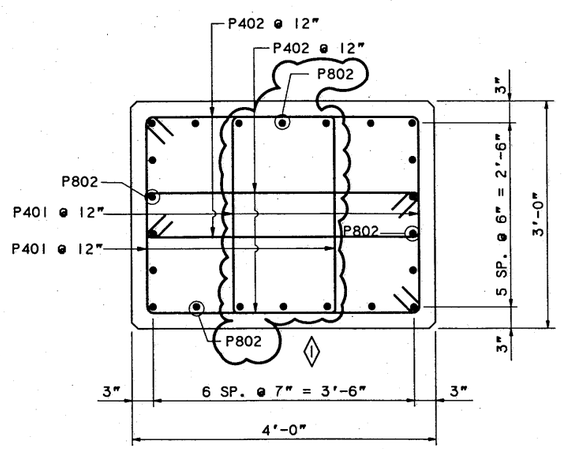

SECTION A-A
1" = 1'-0"

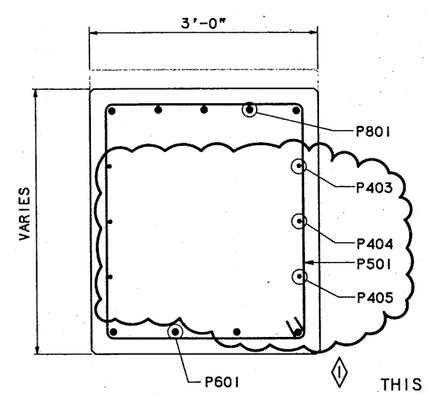

SECTION B-B
1" = 1'-0"

NOTES

1. FOR REINFORCING STEEL SCHEDULE, SEE SHEET FA-36.
2. ALL REINFORCING STEEL SHALL HAVE 2 INCH CLEAR COVER UNLESS NOTED OTHERWISE.
3. FOR PIER MODIFICATION NOTES, SEE SHEET FA-16.

THIS SHEET REVISED 02/28/97

No.	Revision	By:	Date:		By:	Date:
				Designed	KJG	2/97
				Drawn	RJT	2/97
1	PIER REINFORCEMENT MODIFIED	HLR	2/28/97	Checked	HLR	2/97
				In charge of:	RAL	

Maine Turnpike Authority
Maine Turnpike

Trans pass

FOREST AVENUE OVERPASS
PIER - SB
MODIFICATIONS II

HNTB
ARCHITECTS ENGINEERS PLANNERS

Contract 97.8

Sheet No. FA-17
61 of 133

PK01A

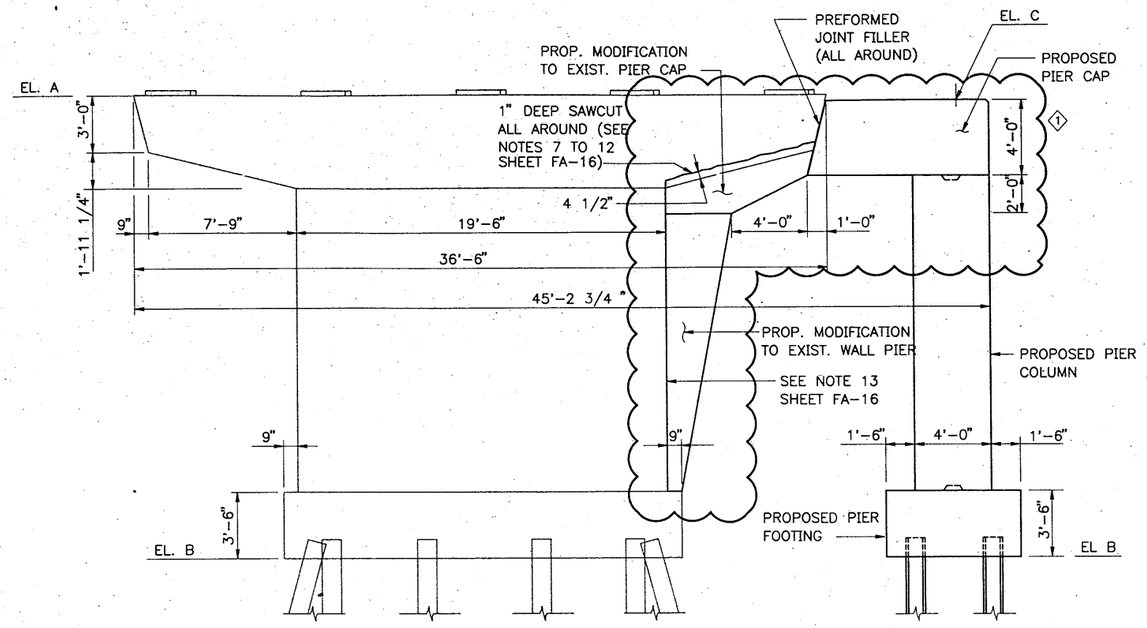

ELEVATION – NB PIER 1 AND PIER 2
(LOOKING UPSTATION)
1/4 "=1'-0"

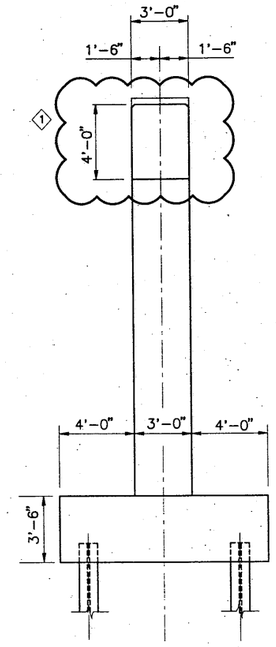

PROPOSED
END ELEVATION
1/4 "=1'-0"

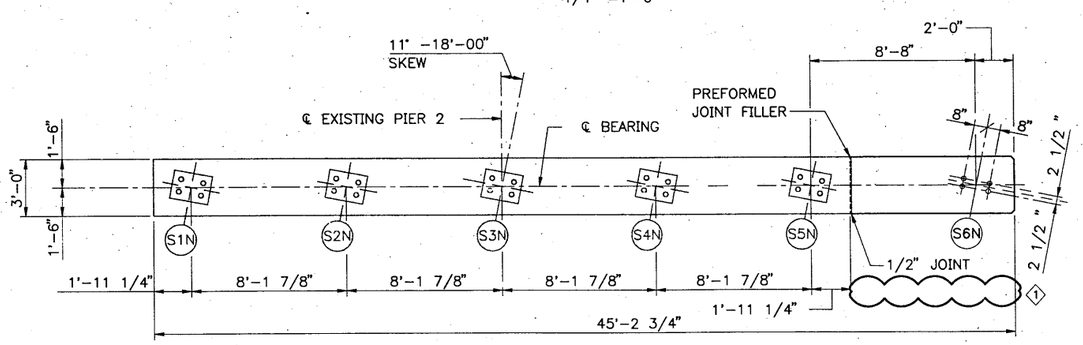

PLAN – NB PIER 2
1/4 "=1'-0"

ELEVATIONS		
POINT	NORTHBOUND	
	PIER 1	PIER 2
A	90.31	90.61
B	66.50	66.50
C	90.10	90.46

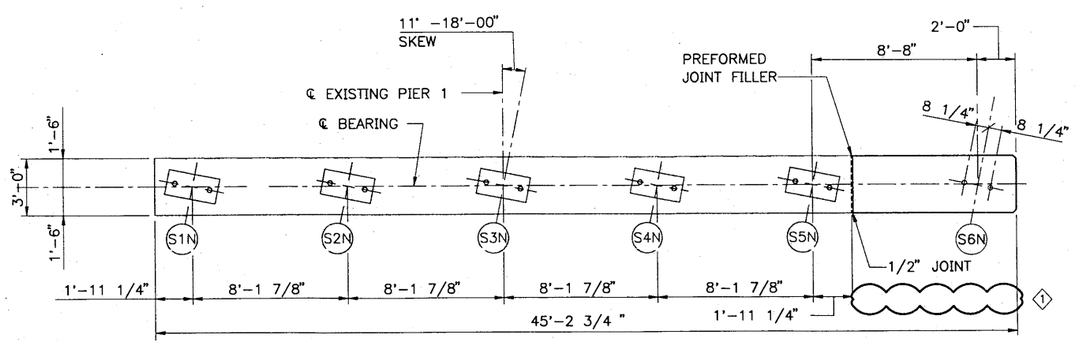

PLAN – NB PIER 1
1/4 "=1'-0"

NOTES

1. FOR PIER AND FOOTING REINFORCEMENT DETAIL, SEE SHEET NO. FA-19.
2. FOR PIER MODIFICATION NOTES, SEE SHEET FA-16.

THIS SHEET REVISED 02/28/97

No.	Revision	By	Date
1	MODIFICATIONS TO PROP. & EXIST. PIERS	HLR	2/28/97

	By	Date
Designed	KJG	2/97
Drawn	LS	2/97
Checked	HLR	2/97
In Charge Of:	RAL	

Maine Turnpike Authority
Maine Turnpike

Trans pass

FOREST AVENUE OVERPASS

PIER – NB
MODIFICATIONS I

HNTB
ARCHITECTS ENGINEERS PLANNERS

Contract 97.8

Sheet No. FA-18
62 of 133

M:\B09009XW\958\023DECK\FA-3 02/21/97 13:35
METI (WEIFA\DOR-01)

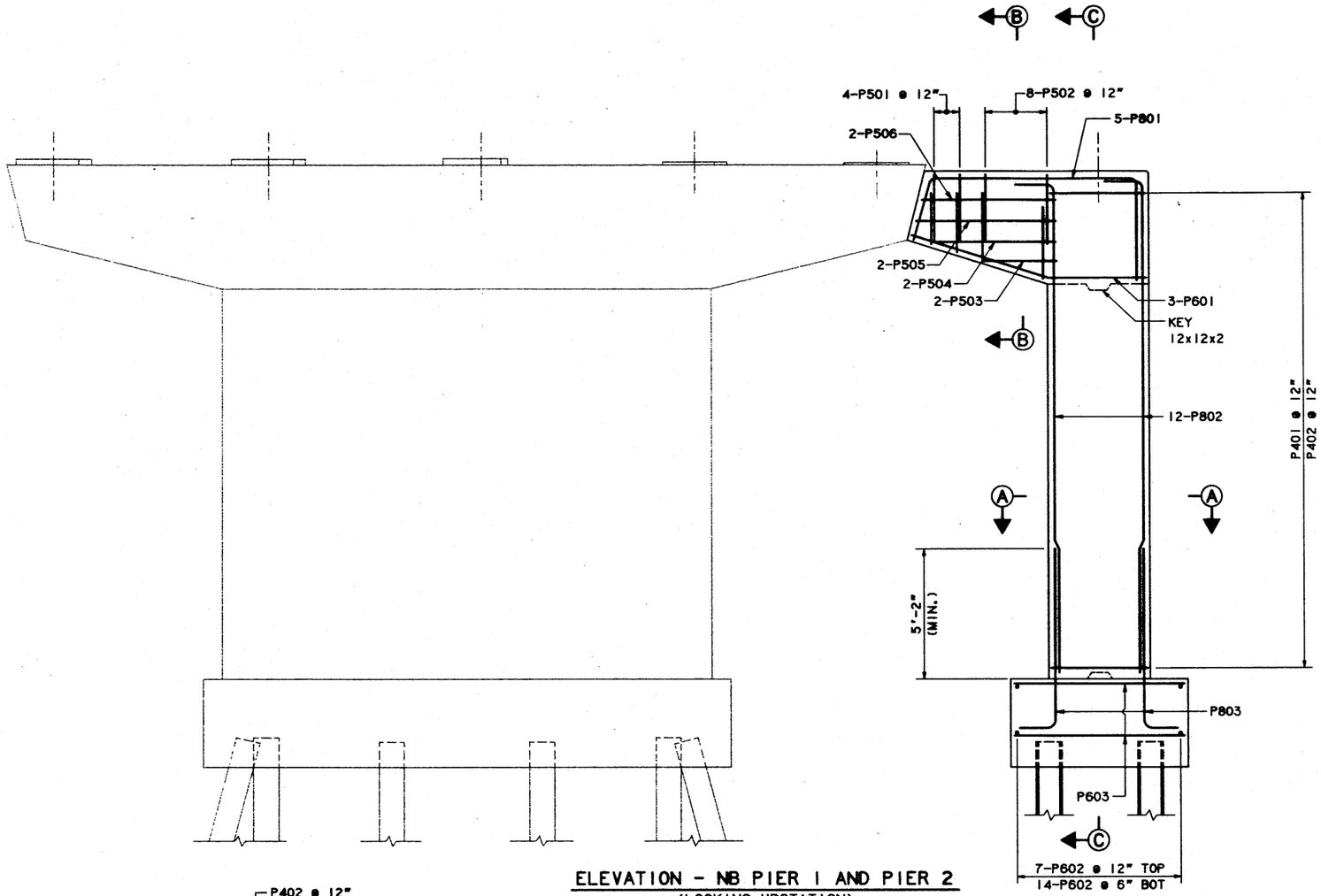

ELEVATION - NB PIER 1 AND PIER 2
(LOOKING UPSTATION)
1/8" = 1'-0"

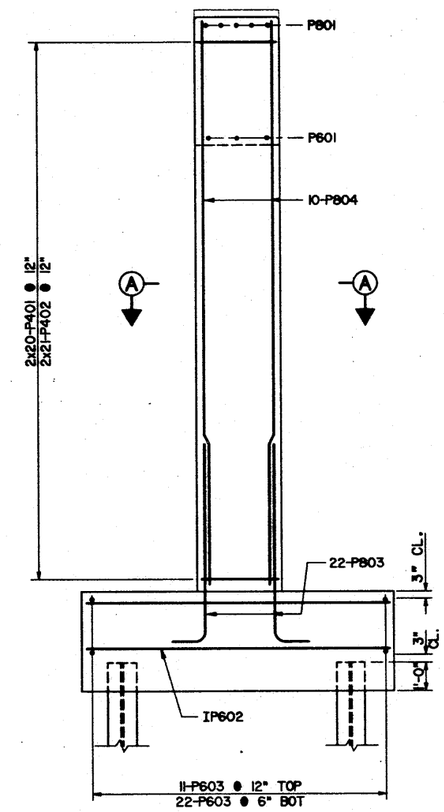

SECTION C-C
3/8" = 1'-0"

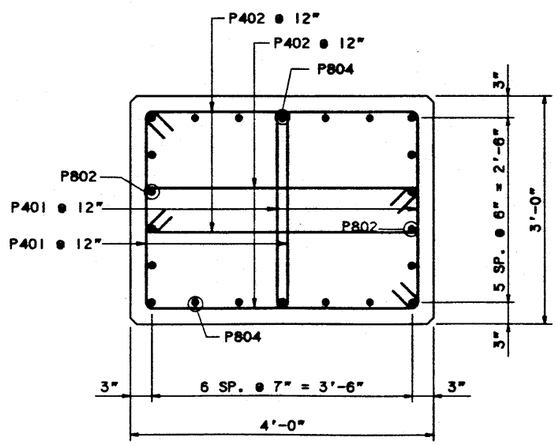

SECTION A-A
1" = 1'-0"

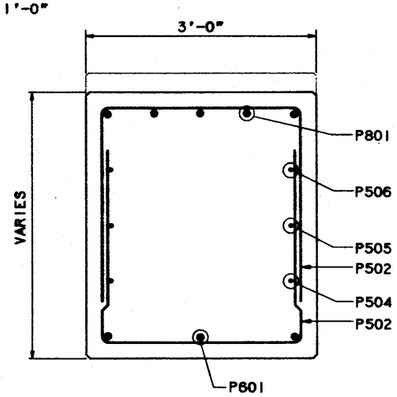

SECTION B-B
1" = 1'-0"

NOTES

1. FOR REINFORCING STEEL SCHEDULE, SEE SHEET FA-38.
2. ALL REINFORCING STEEL SHALL HAVE 2 INCH CLEAR COVER UNLESS NOTED OTHERWISE.

No.	Revision	By:	Date:		By:	Date:
				Designed	KJG	2/97
				Drawn	RJT	2/97
				Checked	HLR	2/97
				In charge of:	RAL	

Maine Turnpike Authority
Maine Turnpike

Trans Compass

FOREST AVENUE OVERPASS
PIER - NB
MODIFICATIONS II

HNTB
ARCHITECTS ENGINEERS PLANNERS

Contract 97.8

Sheet No. FA-19
63 of 133

METPK01A

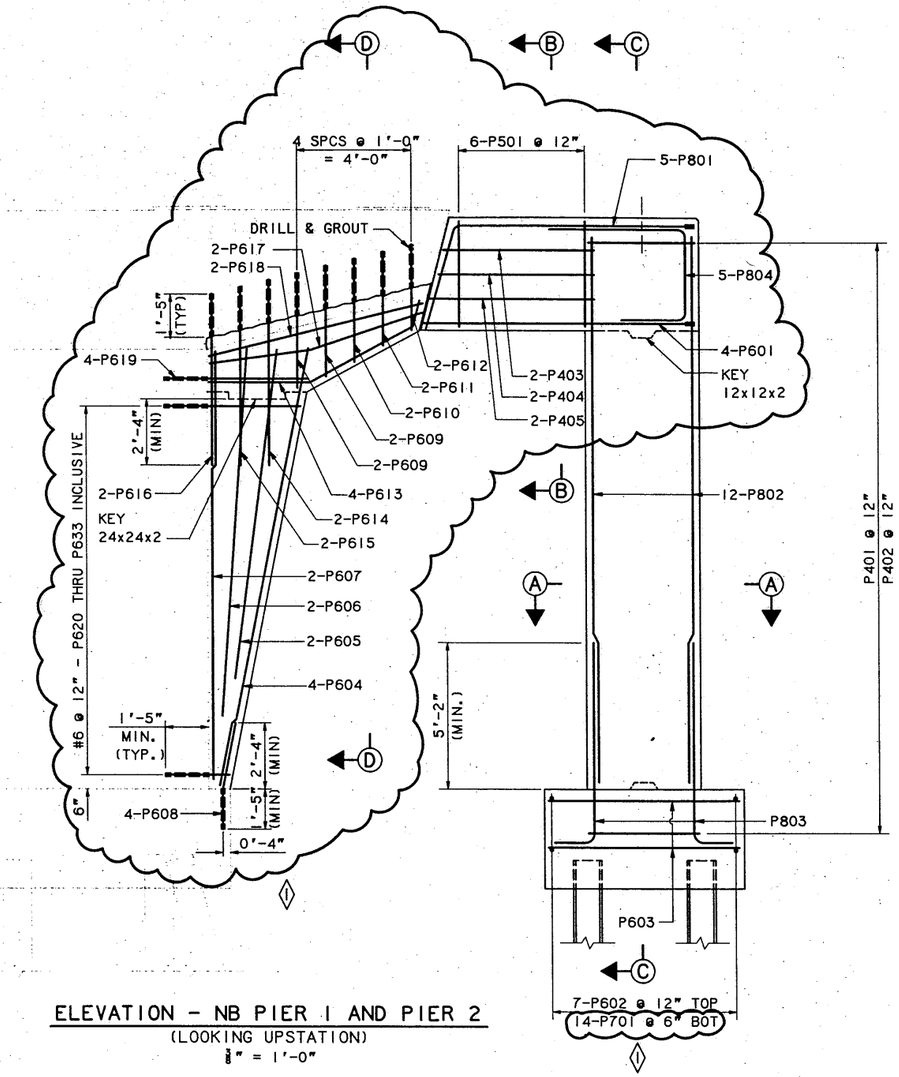

ELEVATION - NB PIER 1 AND PIER 2
(LOOKING UPSTATION)
3/8" = 1'-0"

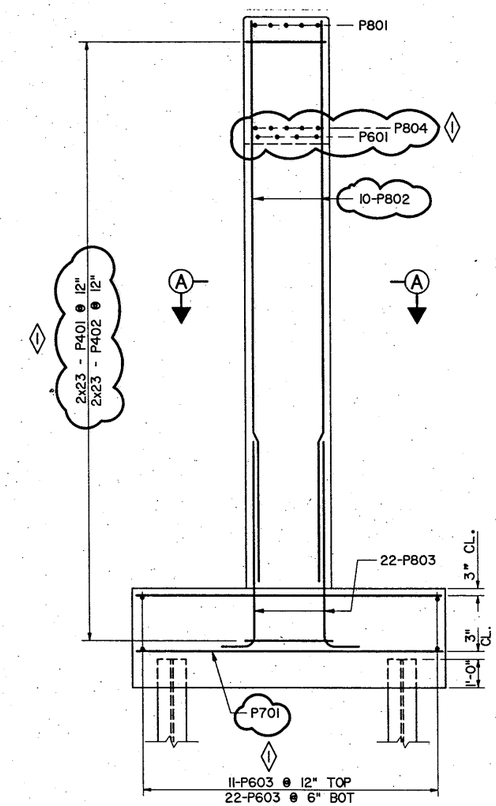

SECTION C-C
3/8" = 1'-0"

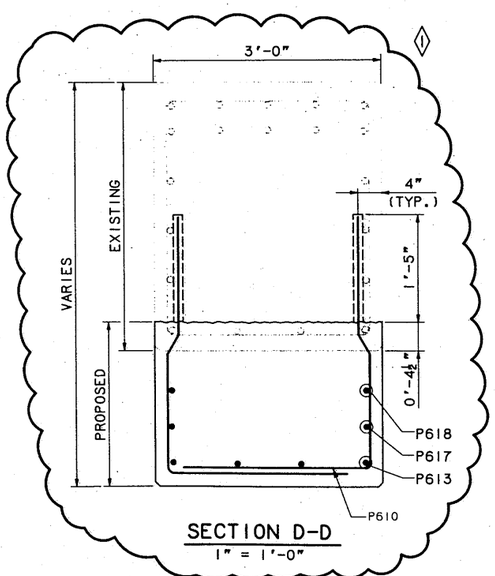

SECTION D-D
1" = 1'-0"

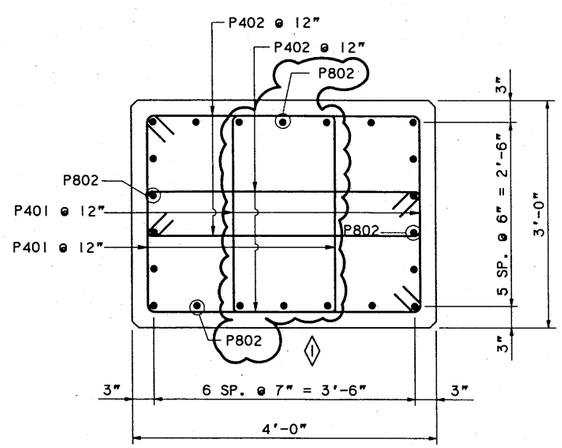

SECTION A-A
1" = 1'-0"

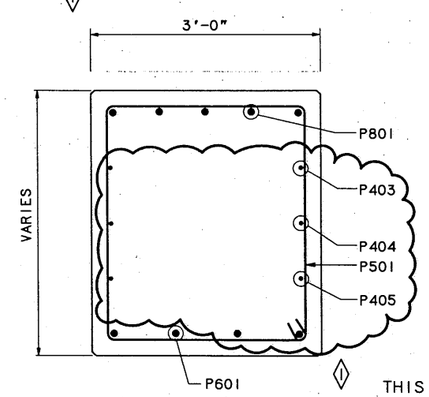

SECTION B-B
1" = 1'-0"

NOTES

1. FOR REINFORCING STEEL SCHEDULE, SEE SHEET FA-36.
2. ALL REINFORCING STEEL SHALL HAVE 2 INCH CLEAR COVER UNLESS NOTED OTHERWISE.
3. FOR PIER MODIFICATION NOTES, SEE SHEET FA-16.

THIS SHEET REVISED 02/28/97

No.	Revision	By:	Date:		By:	Date:
				Designed	KJG	2/97
				Drawn	RJT	2/97
1	PIER REINFORCEMENT MODIFIED	HLR	2/28/97	Checked	HLR	2/97
				In charge of:	RAL	

Maine Turnpike Authority
Maine Turnpike

Trans pass

FOREST AVENUE OVERPASS
PIER - NB
MODIFICATIONS II

HNTB
ARCHITECTS ENGINEERS PLANNERS

Contract 97.8

Sheet No. FA-19
63 of 133

METPK01A

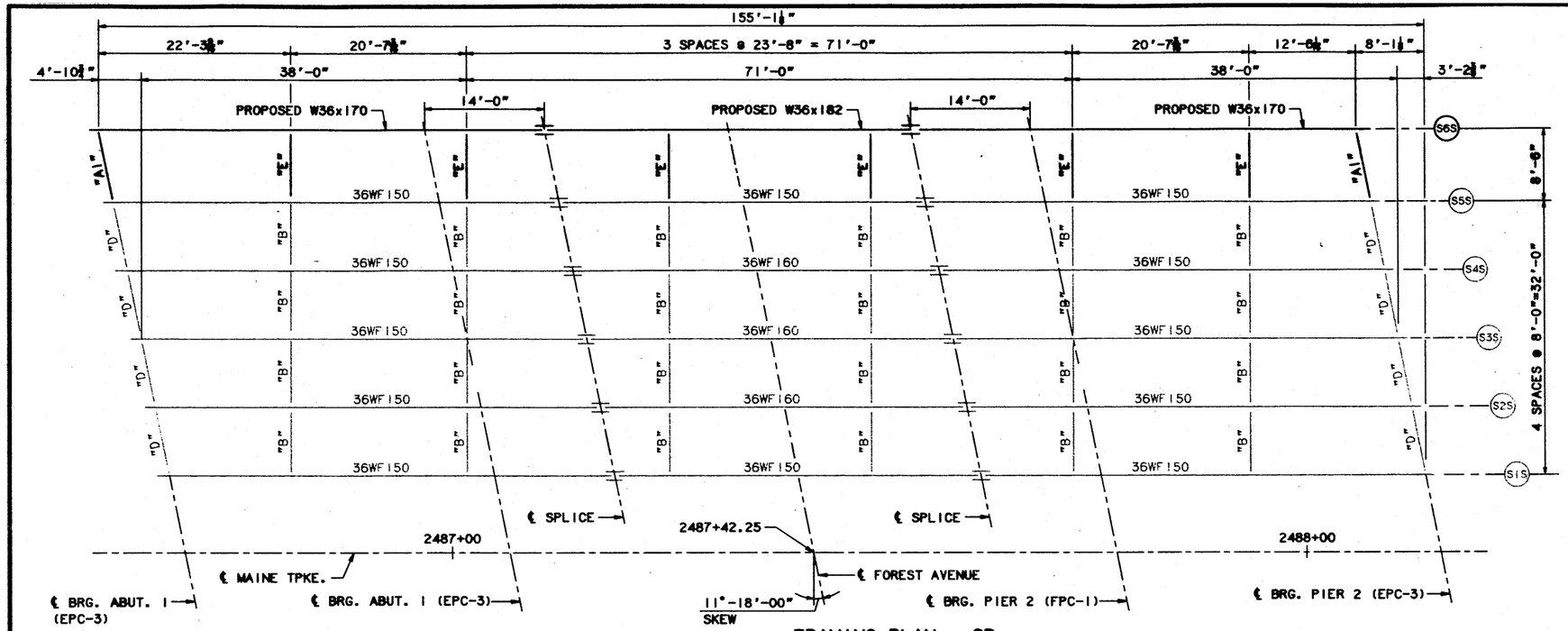

FRAMING PLAN - SB

1/8"=1'-0"

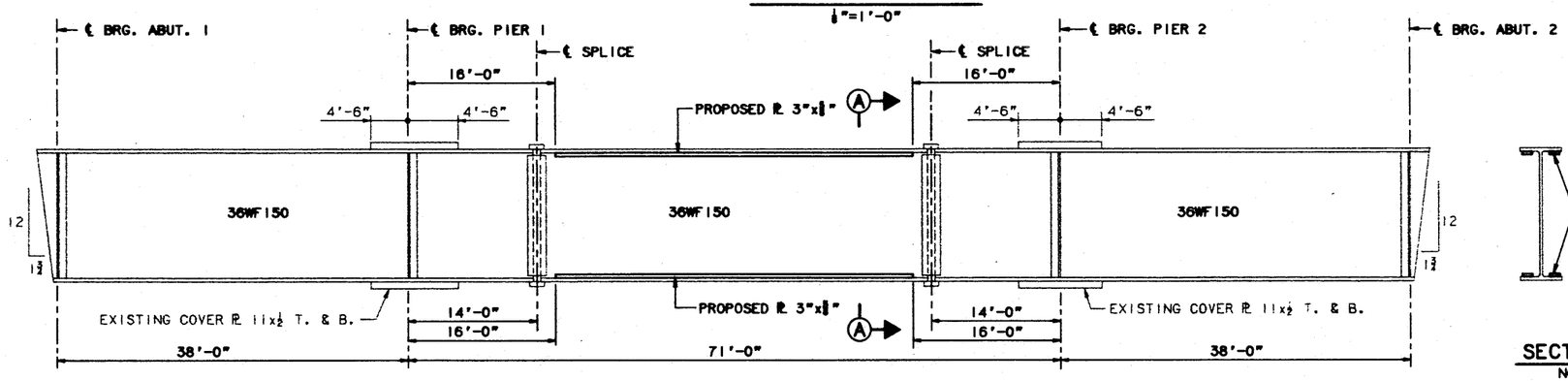

ELEVATION - PROPOSED MODIFICATION TO EXISTING STRINGER S5S

NO SCALE

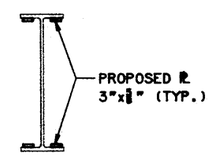

SECTION A-A

NO SCALE

NOTES

1. FOR DIAPHRAGM TYPES A1 AND E, AND ADDITIONAL STRUCTURAL STEEL DETAILS, SEE SHEET FA-22.
2. THE PROPOSED BEARING TYPES INDICATED ON THE FRAMING PLAN ARE FOR THE PROPOSED STRINGER S6S. REFER TO SHEET FA-23 FOR DIMENSIONS AND DETAILS FOR THE RESPECTIVE BEARING DEVICES.

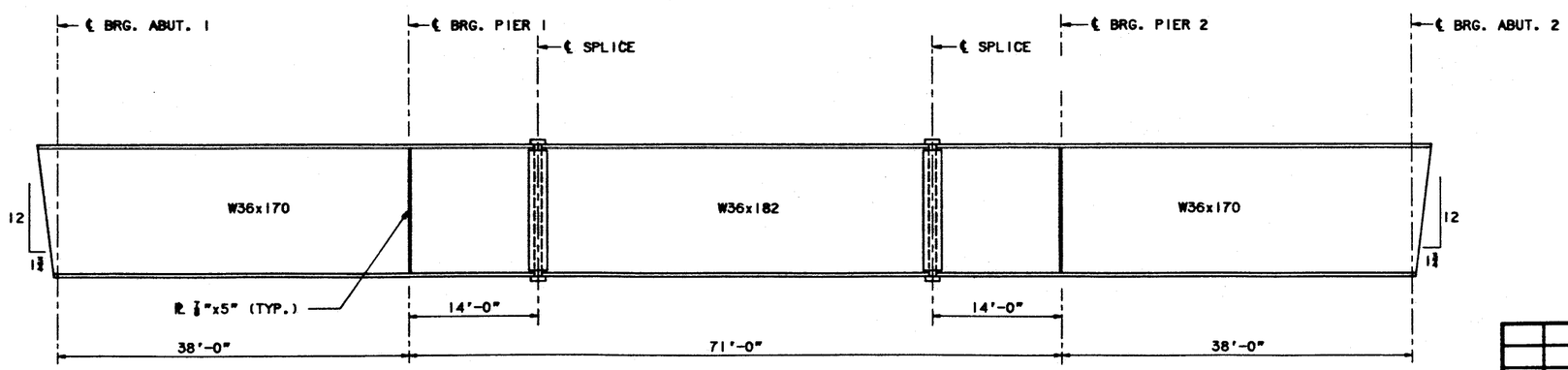

ELEVATION - PROPOSED STRINGER S6S

NO SCALE

No.	Revision	By:	Date:		By:	Date:
				Designed	KJG	2/97
				Drawn	LS	2/97
				Checked	HLR	2/97
				In charge of:	RAL	

Maine Turnpike Authority
Maine Turnpike

Trans pass

FOREST AVENUE OVERPASS

FRAMING PLAN SB & STRINGER ELEVATION

HNTB
ARCHITECTS ENGINEERS PLANNERS

Contract 97.8

Sheet No. FA-20
64 of 133

METPK01A

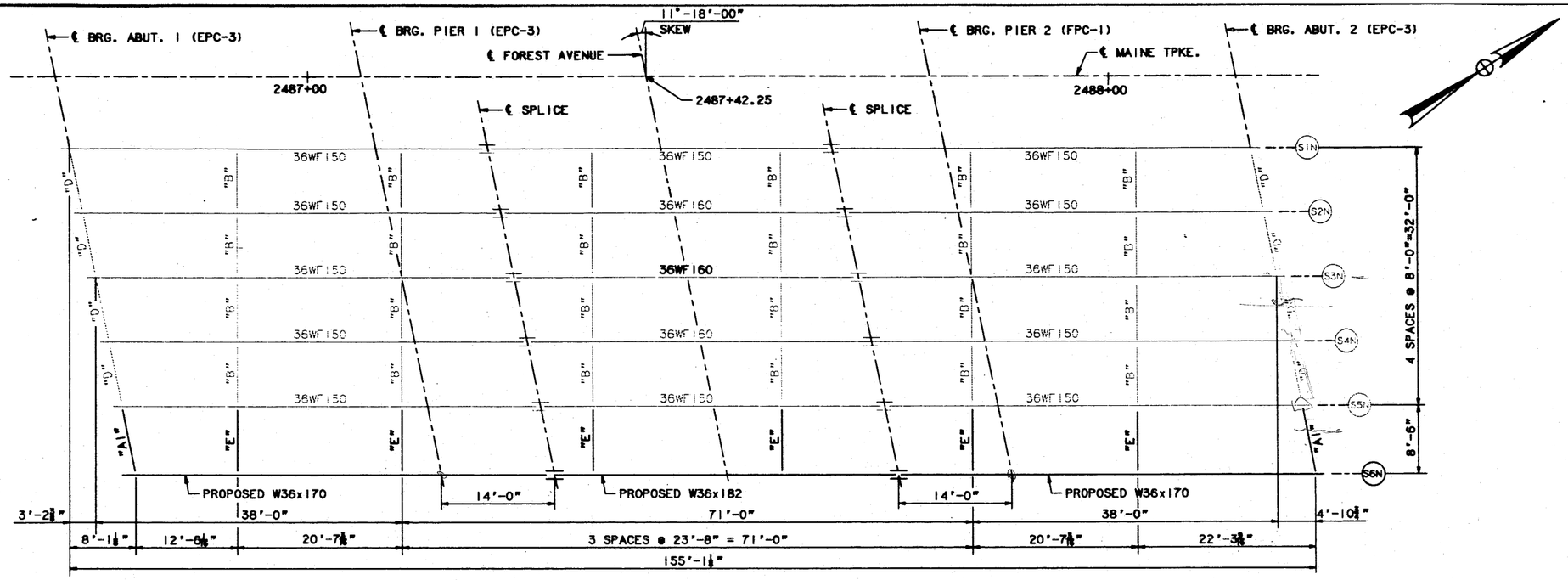

FRAMING PLAN - NB

½"=1'-0"

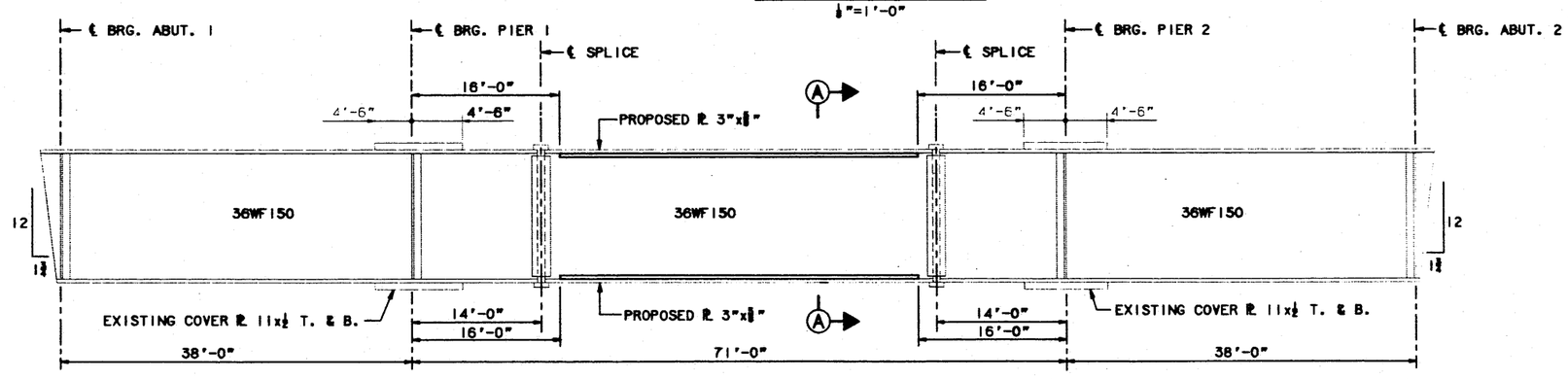

ELEVATION - PROPOSED MODIFICATION TO EXISTING STRINGER S5N

NO SCALE

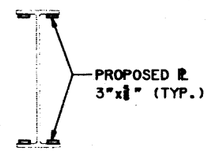

SECTION A-A

NO SCALE

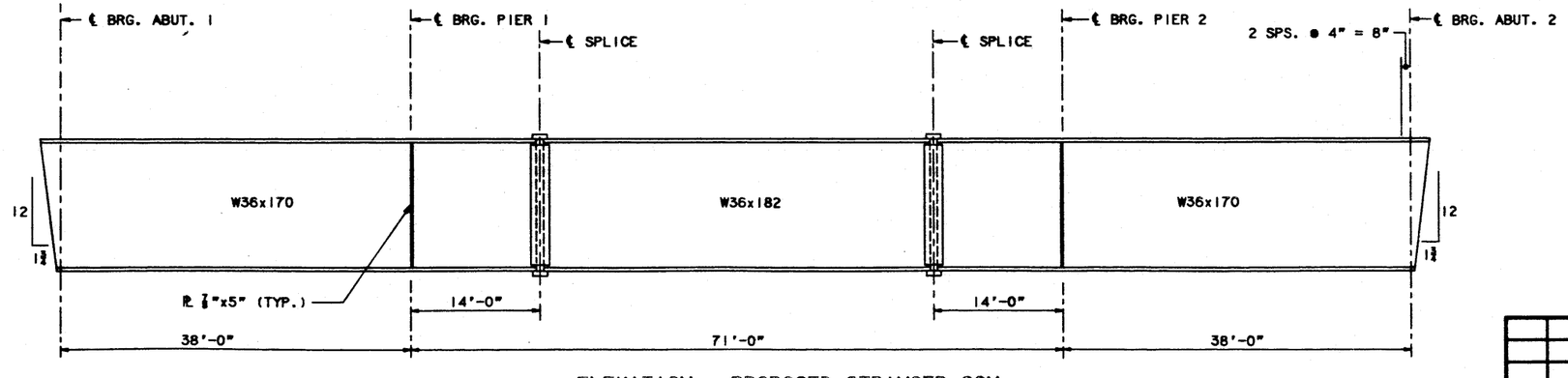

ELEVATION - PROPOSED STRINGER S6N

NO SCALE

NOTES

1. FOR DIAPHRAGM TYPES A1 AND E, AND ADDITIONAL STRUCTURAL STEEL DETAILS, SEE SHEET FA-22.
2. THE PROPOSED BEARING TYPES INDICATED ON THE FRAMING PLAN ARE FOR PROPOSED STRINGER S6N. REFER TO SHEET FA-23 FOR DIMENSIONS AND DETAILS FOR THE RESPECTIVE BEARING DEVICES.

No.	Revision	By:	Date:		By:	Date:
				Designed	KJG	2/97
				Drawn	LS	2/97
				Checked	HLR	2/97
				In charge of:	RAL	

Maine Turnpike Authority
Maine Turnpike

Trans Compass

FOREST AVENUE OVERPASS
FRAMING PLAN NB & STRINGER ELEVATION

HNTB
ARCHITECTS ENGINEERS PLANNERS

Contract 97.8

Sheet No. FA-21
65 of 133

METPK01A

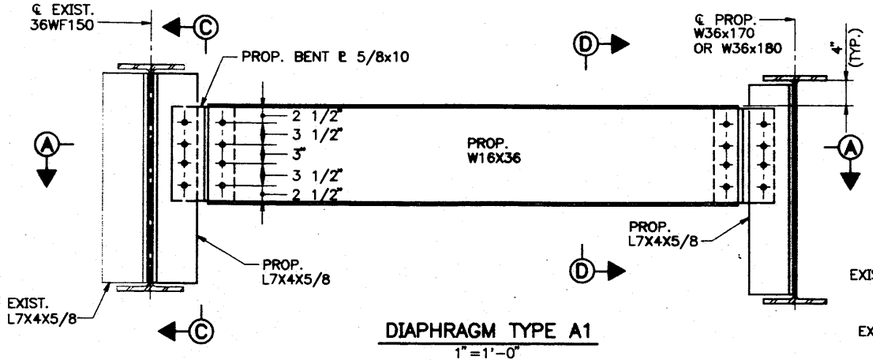

DIAPHRAGM TYPE A1
1"=1'-0"

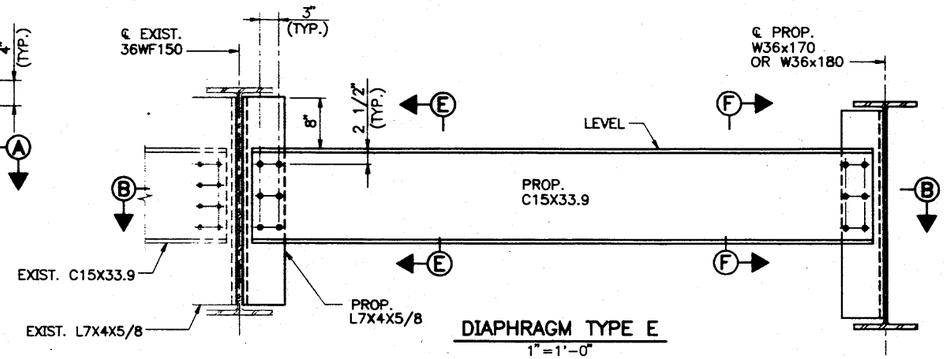

DIAPHRAGM TYPE E
1"=1'-0"

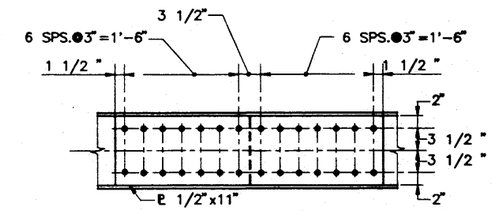

PLAN – PROPOSED SPLICE
TOP OR BOTTOM FLANGE
1"=1'-0"

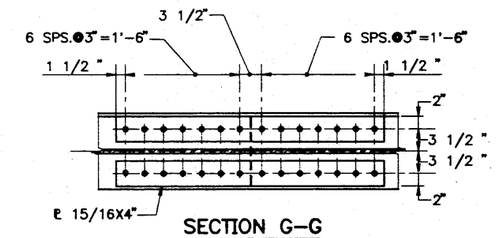

SECTION G–G
1"=1'-0"

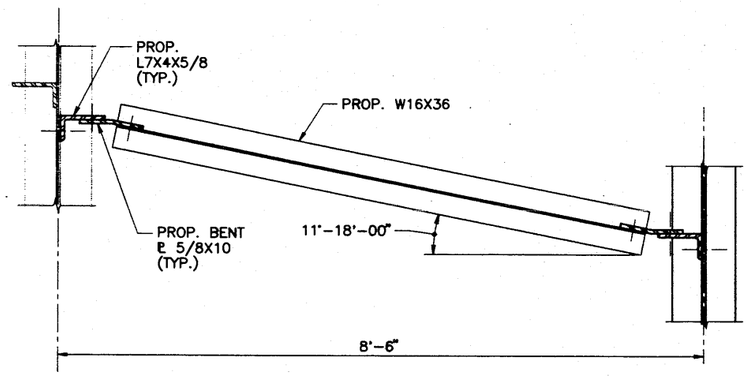

SECTION A–A
1"=1'-0"

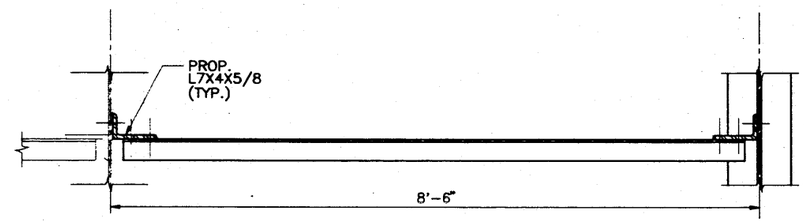

SECTION B–B
1"=1'-0"

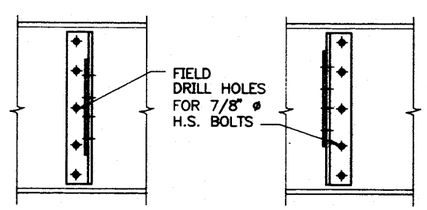

SECTION C–C
1"=1'-0"

SECTION D–D
1"=1'-0"

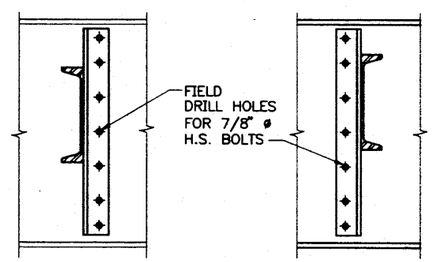

SECTION E–E
1"=1'-0"

SECTION F–F
1"=1'-0"

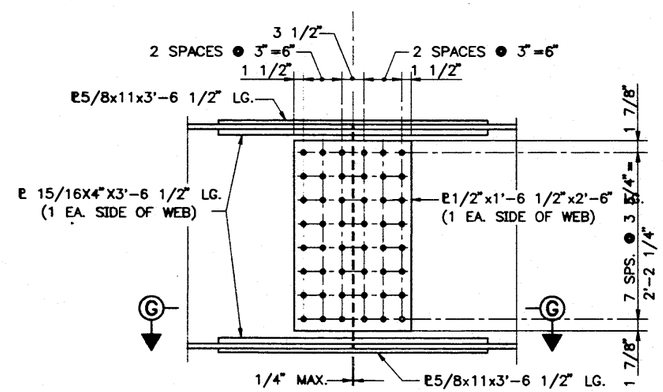

ELEVATION – PROPOSED SPLICE
1"=1'-0"

NOTES

1. STEEL SHALL BE AASHTO M270, GRADE 36 AND PAID FOR UNDER ITEM 504.701.
2. THE ORIENTATION OF THE L7x4x5/8 AS SHOWN ON THE ELEVATION VIEW MAY CHANGE UPON DISCRETION OF THE ENGINEER. THE PROPOSED ANGLES SHALL BE OFFSET AND NOT INTERFERE WITH EXISTING ANGLES AS SHOWN IN SECTION A–A AND B–B.
3. ALL BOLTS SHALL BE 7/8" DIA. H.S. BOLTS AASHTO TYPE M164. HOLE SIZES FOR BOLTS SHALL CONFORM TO SECTION 504.23 OF THE STANDARD SPECIFICATIONS, AND EDGE DISTANCES SHALL BE 1 1/2" MIN. UNLESS OTHERWISE SHOWN.
4. BEARING STIFFENERS SHALL BE MACHINED TO HAVE FULL BEARING, AND SHALL HAVE A FILLET WELD ON EACH SIDE.
5. ALL FILLET WELDS WHICH CONNECT STIFFENERS TO EITHER A FLANGE OR WEB PLATE, SHALL BE STARTED AND STOPPED APPROXIMATELY 1/2 INCH FROM THE ENDS OR EDGES OF THE PLATE.
6. PROPOSED INTERIOR COVER PLATES SHALL BE FILLET WELDED BOTH SIDES TO FLANGES OF 36WF150, NO WELDS ARE ALLOWED AT END OF COVER PLATES.
7. FILLET WELDS SHALL BE THE MINIMUM SIZE SPECIFIED BY THE AWS STRUCTURAL WELDING CODE D1.5, TABLE 2.2 UNLESS OTHERWISE SHOWN ON THE DESIGN DRAWINGS. FIT-UP SHALL MEET THE REQUIREMENTS OF AWS D1.5, ART. 3.3, ASSEMBLY.

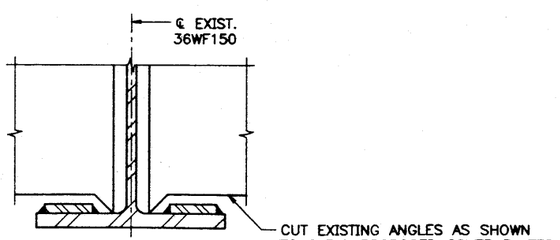

COVER PLATE DETAIL AT DIAPHRAGM LOCATIONS
N.T.S.

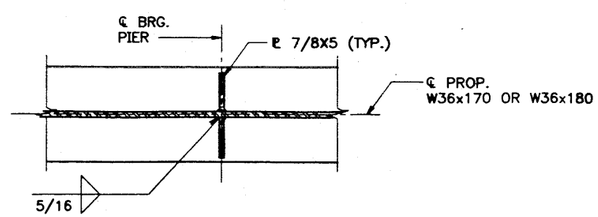

BEARING STIFFENER DETAIL AT PIER
1 1/2"=1'-0"

No.	Revision	By	Date		By	Date
				Designed	KJG	2/97
				Drawn	LMR	2/97
				Checked	HLR	2/97
				In Charge Of:	RAL	

Maine Turnpike Authority
Maine Turnpike

Trans pass

FOREST AVENUE OVERPASS

STRUCTURAL STEEL DETAILS

HNTB
ARCHITECTS ENGINEERS PLANNERS

Contract 97.8

Sheet No. FA–22
66 of 133

(METPK\BDR-01)
M:\B09009XW\958\023DECK\FA-14 01/20/97 14:00

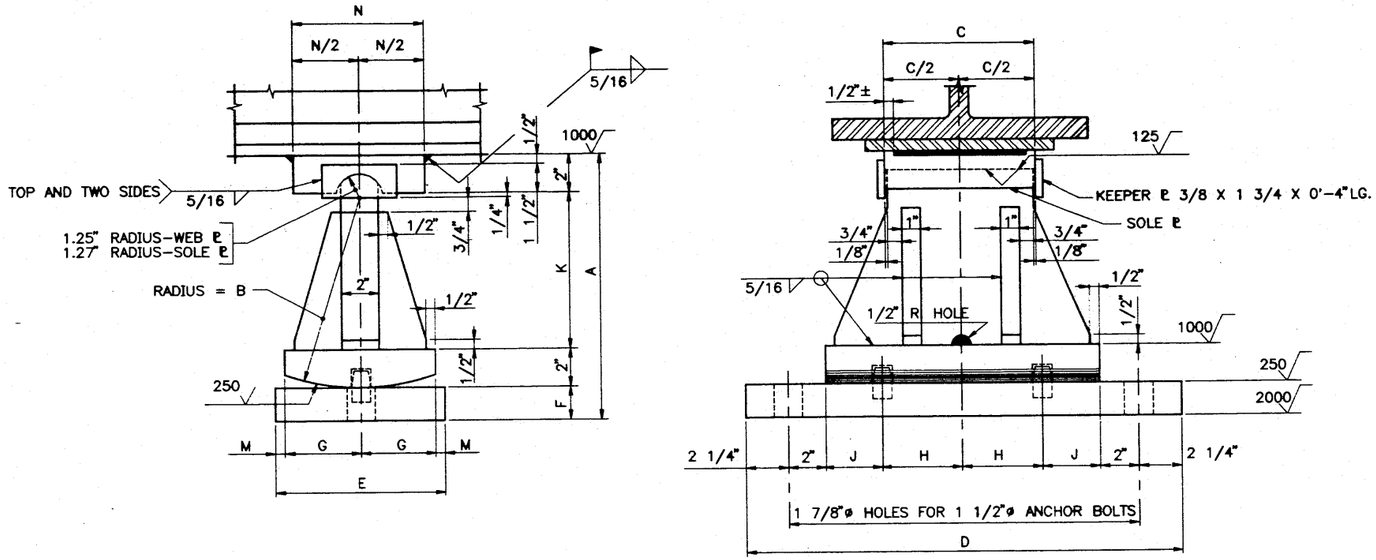

EXPANSION PEDESTAL – EPC

3" = 1'-0"

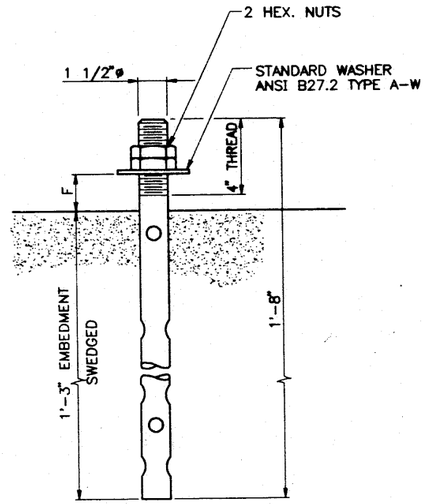

NOTE

TWO REQUIRED FOR EACH EXPANSION PEDESTAL – EPC.
FOUR REQUIRED FOR EACH FIXED PEDESTAL – FPC.

ANCHOR BOLT DETAIL

3" = 1'-0"

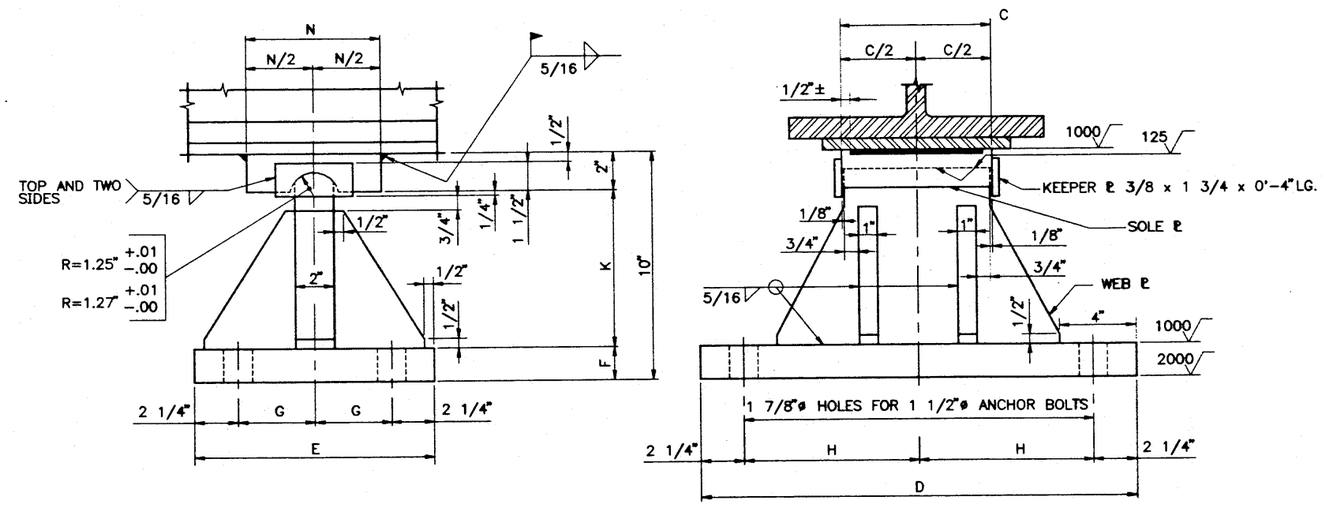

FIXED PEDESTAL – FPC

3" = 1'-0"

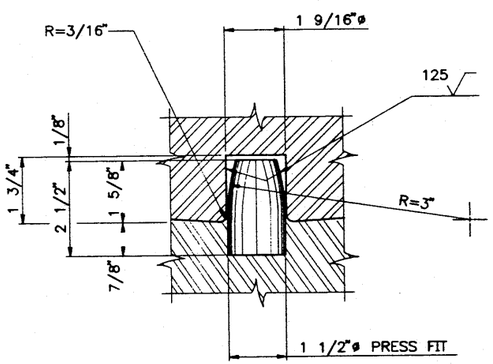

PINTLE DETAIL

3" = 1'-0"

NOTES

1. ALL STEEL, INCLUDING THE ANCHOR BOLTS, SHALL BE AASHTO M270, GRADE 50.
2. NUTS SHALL CONFORM TO AASHTO M291, ASTM A563, HEAVY HEX, GRADE A.
3. UPSET THREADS ON ANCHOR BOLTS AFTER ASSEMBLY.
4. BEARING PLATES SHALL BE PLACED ON 1/8" PREFORMED FABRIC PAD.
5. ALL NEW BEARINGS SHALL BE PAID FOR UNDER ITEM 504.7011.

PEDESTALS – ALLOWABLE LOADS AND DIMENSIONS

PEDESTAL	LOAD	A	B	C	D	E	F	G	H	J	K	M	N
EPC-1	100K	9 3/4"	6"	8"	1'-8 1/2"	8"	1 1/2"	3 1/2"	3"	3"	4 1/4"	1/2"	6"
EPC-2	150K	11 3/4"	8"	8"	1'-8 1/2"	8"	1 1/2"	3 1/2"	3"	3"	6 1/4"	1/2"	6"
EPC-3	200K	1'-2"	10"	8"	1'-9"	9"	1 3/4"	4"	3 1/4"	3"	8 1/4"	1/2"	7"
EPC-4	250K	1'-2"	10"	8"	1'-11"	9"	1 3/4"	4"	4 1/4"	3"	8 1/4"	1/2"	7"
EPC-5	300K	1'-2 1/4"	10"	9"	2'-1"	10"	2"	4 1/2"	5 1/4"	3"	8 1/4"	1/2"	8"
EPC-6	350K	1'-4 1/2"	1'-0"	10"	2'-1"	1'-0"	2 1/4"	5"	5 1/4"	3"	10 1/4"	1"	8"
EPC-7	400K	1'-4 1/2"	1'-0"	1'-0"	2'-3"	1'-0"	2 1/4"	5"	5 1/4"	4"	10 1/4"	1"	8"
FPC-1	200K	—	—	8"	1'-8 1/2"	9 1/2"	1 1/4"	2 1/2"	8"	—	6 3/4"	—	6"
FPC-2	250K	—	—	8"	1'-8 1/2"	10 1/2"	1 1/2"	3"	8"	—	6 1/2"	—	7"
FPC-3	300K	—	—	9"	2'-0 1/2"	10 1/2"	1 1/2"	3"	10"	—	6 1/2"	—	8"
FPC-4	350K	—	—	10"	2'-0 1/2"	1'-0 1/2"	1 3/4"	4"	10"	—	6 1/4"	—	8"
FPC-5	400K	—	—	1'-0"	2'-2 1/2"	1'-0 1/2"	2"	4"	11"	—	6"	—	8"

No.	Revision	By	Date		By	Date
				Designed	KJG	2/97
				Drawn	LMR	2/97
				Checked	HLR	2/97
				In Charge Of:	RAL	

Maine Turnpike Authority
Maine Turnpike

Trans pass

FOREST AVENUE OVERPASS

BEARING DETAILS

HNTB
ARCHITECTS ENGINEERS PLANNERS

Contract 97.8

Sheet No. FA-23
67 of 133

(METPK\BDR-01)
M:\B09009XW\958\023DECK\FA-20 02/10/97 08:34

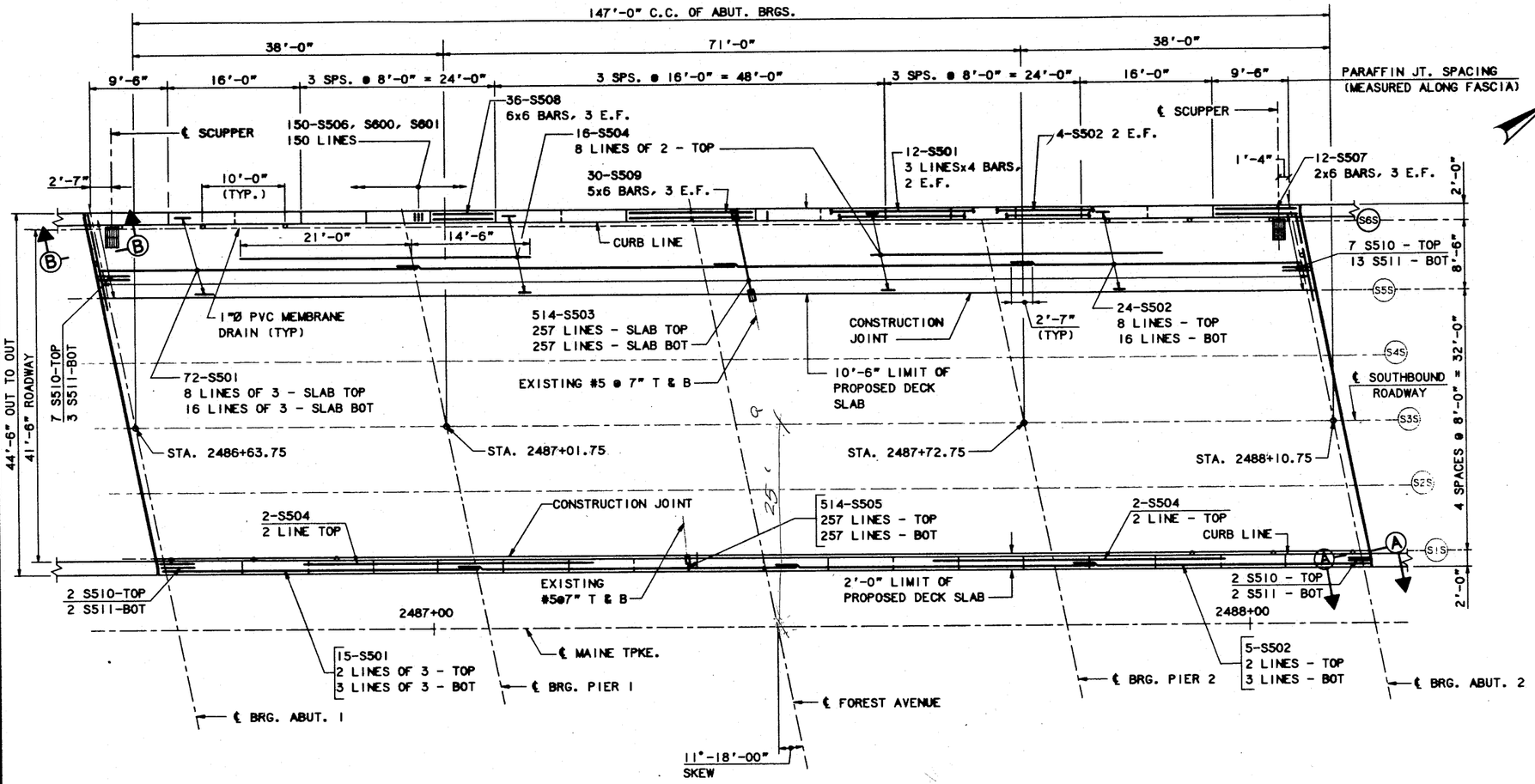

DECK PLAN - SB

1/8"=1'-0"

PLACEMENT NOTES

1. THE FORMWORK FOR THE CONSTRUCTION JOINTS SHALL REMAIN IN PLACE UNTIL A MINIMUM OF 48 HOURS HAS ELAPSED AFTER PLACEMENT OF THE SLAB. AFTER WHICH, REMOVAL OF FORMWORK MEETING THE REQUIREMENTS FOR FORM REMOVAL OF SECTION 502 (STRUCTURAL CONCRETE) OF THE STANDARD SPECIFICATIONS, MAY PROCEED.
2. STAY IN PLACE FORMS ARE NOT ALLOWED TO BE USED.
3. BEGIN PLACEMENT AT THE LOW END OF THE BLOCK.

SUPERSTRUCTURE NOTES

1. ADJUST REINFORCING STEEL TO FIT AROUND THE SCUPPERS IN A MANNER APPROVED BY THE ENGINEER. DO NOT CUT TRANSVERSE REINFORCING BARS. LONGITUDINAL BARS MAY BE CUT TO FIT.
2. FOR STEEL REINFORCING SCHEDULE, SEE SHEET NO. FA-36.
3. FOR SCUPPER AND DRAIN DETAILS, SEE SHEET NO. FA-26.
4. FOR 1-BAR ALUMINUM BRIDGE RAIL DETAILS, SEE SHEET NO. FA-30.
5. FOR SLAB DETAILS, SEE SHEET NOS. FA-26 AND FA-27.
6. FOR EXPANSION JOINT DETAILS, SEE SHEET NOS. FA-28 AND FA-29.
7. THE CONCRETE DECK SHALL BE GIVEN A SMOOTH BULL FLOAT OR WOOD FLOAT FINISH.
8. FOR SECTIONS A-A AND B-B SEE SHEET NO. FA-29.
9. FOR DETAILS 1, 2 AND 3 SEE SHEET NO. FA-25.
10. EXTERIOR PARAPET REINFORCING SHOWN, INTERIOR PARAPET SIMILAR.
11. ~~EPOXY~~ QUICK-WEDGE MECHANICAL LAP SPLICE MANUFACTURED BY ERICO PRODUCTS, INC., SOLON, OHIO, or equivalent and approved by the Engineer
12. DRAINS ARE INSTALLED SUCH THAT THEY DO NOT DRAIN ONTO A FLANGE OR BRIDGE SEAT.

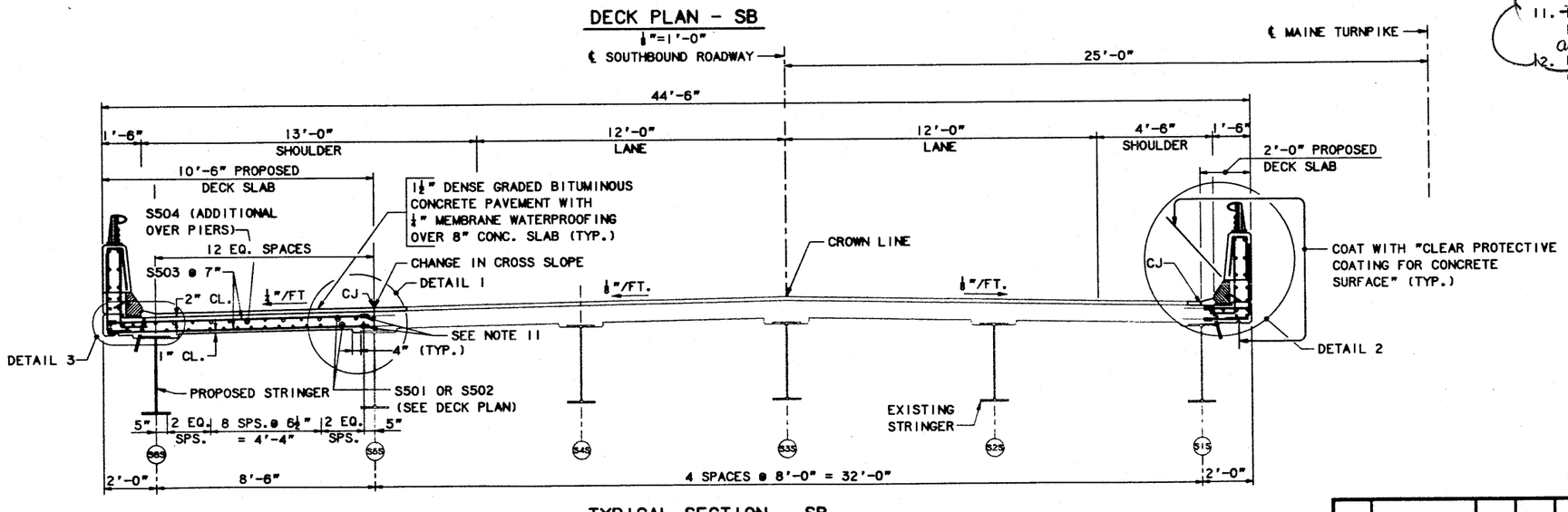

TYPICAL SECTION - SB

(LOOKING UPSTATION)

½" = 1'-0"

No.	Revision	By:	Date:		By:	Date:
				Designed	KJG	2/97
				Drawn	RJT	2/97
1	Note	AD	3/10/97	Checked	HLR	2/97
				In charge of:	RAL	

Maine Turnpike Authority

Maine Turnpike

Trans pass

FOREST AVENUE OVERPASS

DECK PLAN SB AND TYPICAL SECTION

HNTB ARCHITECTS ENGINEERS PLANNERS

Contract 97.8

Sheet No. FA-24

68 of 133

METPK01A

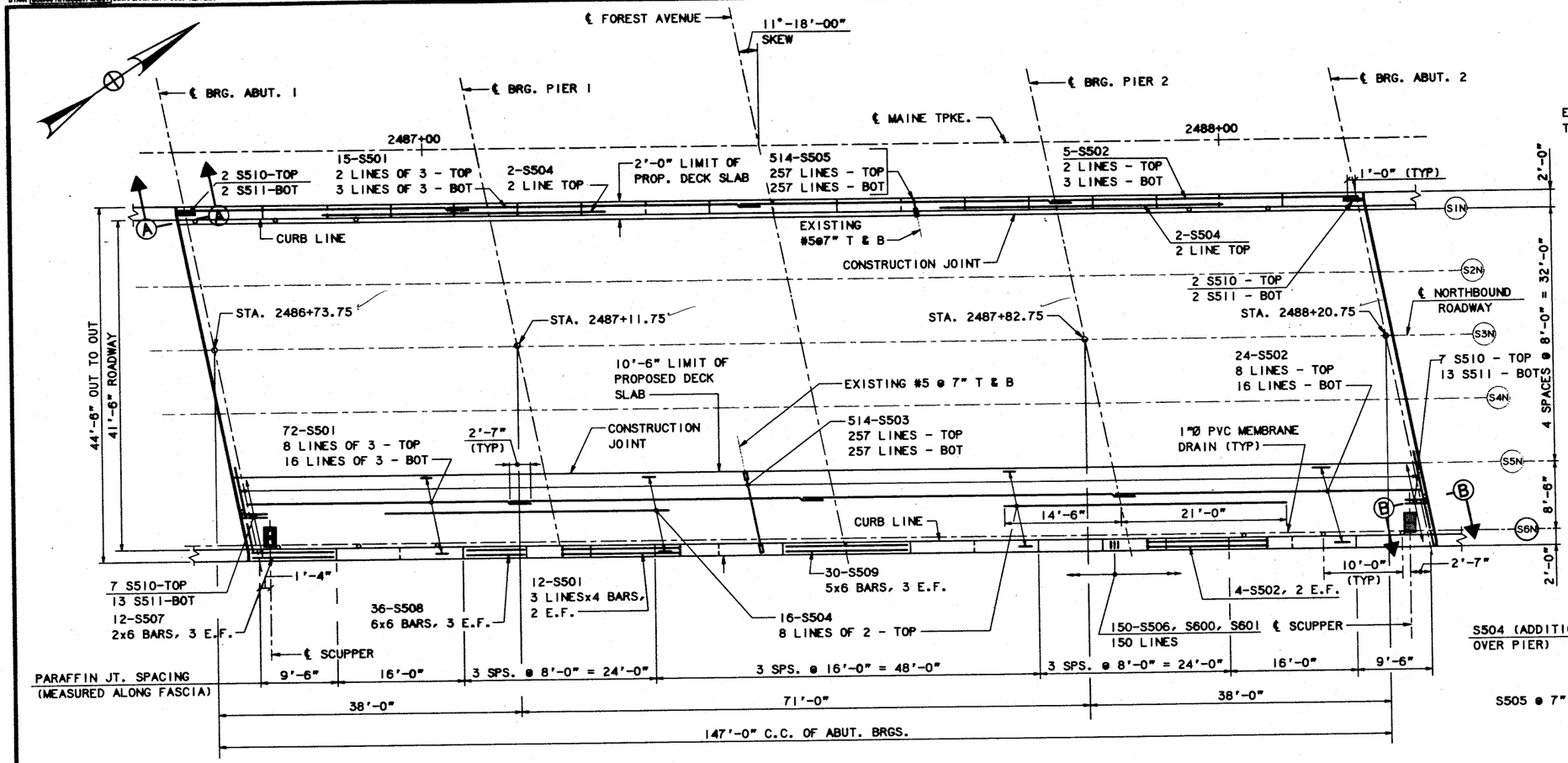

DECK PLAN - NB

1/8"=1'-0"

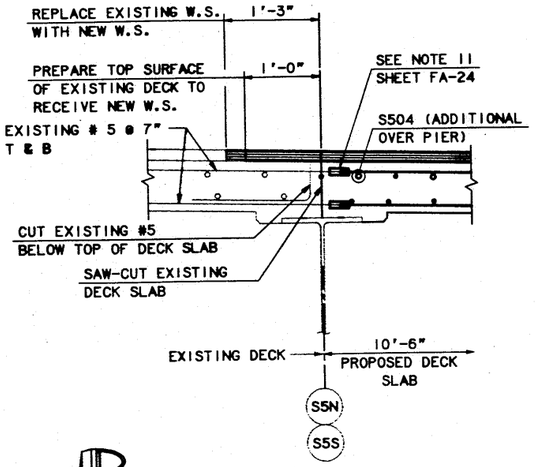

DETAIL 1

1" = 1'-0"

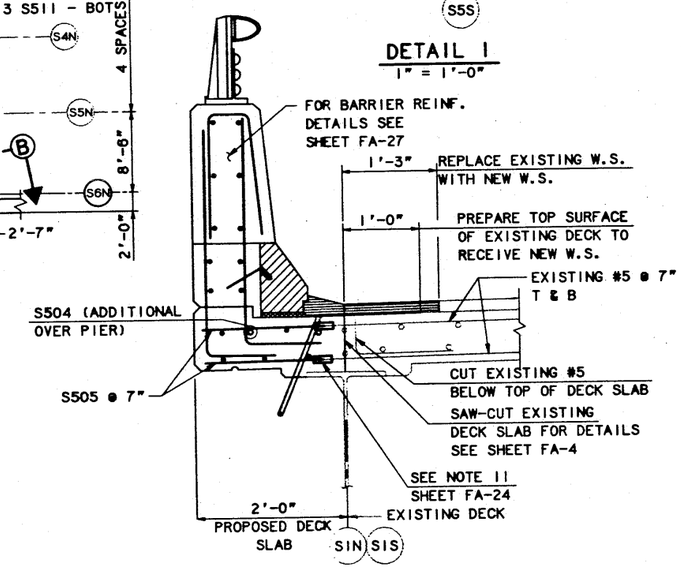

DETAIL 2

1" = 1'-0"

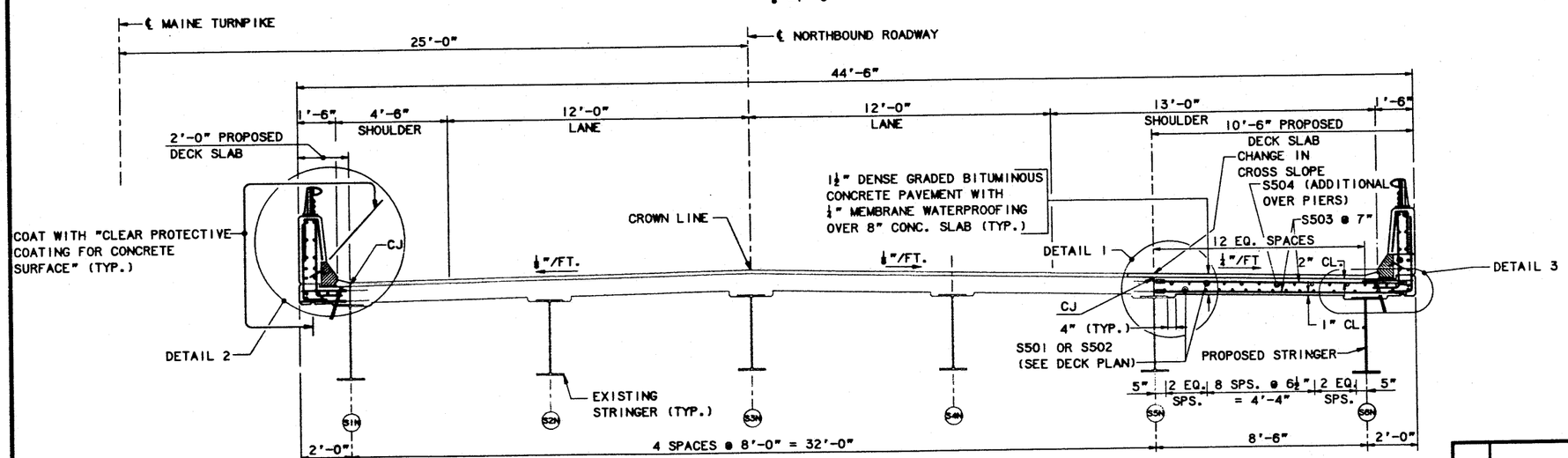

TYPICAL SECTION - NB

(LOOKING UPSTATION)

1/8" = 1'-0"

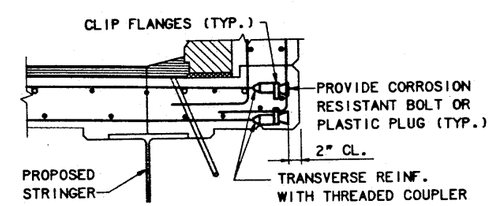

DETAIL 3

1" = 1'-0"

No.	Revision	By:	Date:		By:	Date:
				Designed	KJG	2/97
				Drawn	RJT	2/97
				Checked	HLR	2/97
				In charge of:	RAL	

Maine Turnpike Authority

Maine Turnpike

Transpass

FOREST AVENUE OVERPASS

DECK PLAN NB AND TYPICAL SECTION

HNTB ARCHITECTS ENGINEERS PLANNERS

Contract 97.8

Sheet No. FA-25

69 of 133

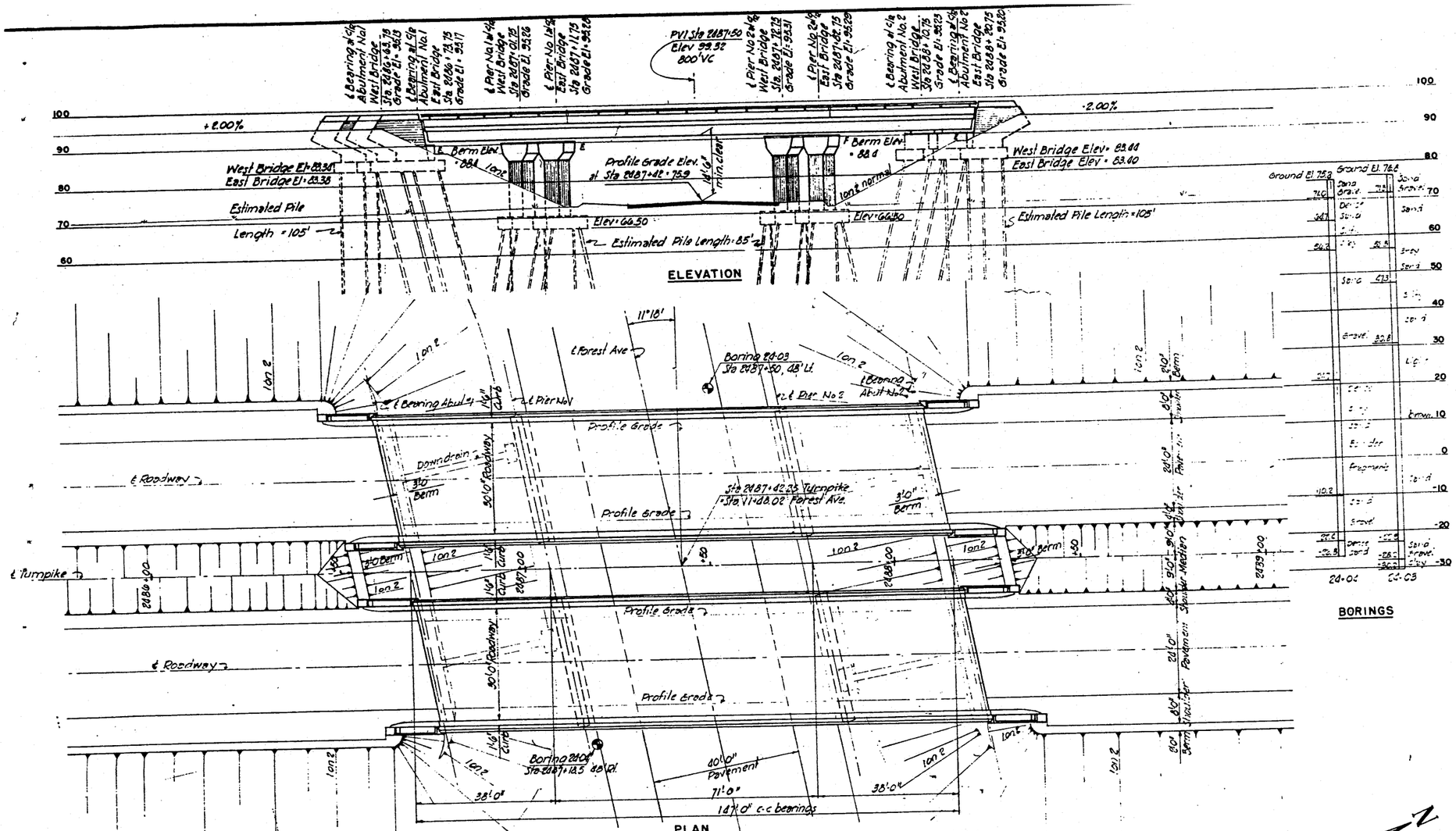

GENERAL NOTES

Design Specifications: AASHO (1953) with minor modifications.
Design Live Load: H20-S16
Max Pile Loads
Abutments 26.0 Tons
Piers 55.0 Tons

REFERENCES

Drawing Number	Title	Substructure	Superstructure Plans	Superstructure Details	Superstructure Floor Plans
SD-1	Standard Abutment Details	✓	✓	✓	✓
SD-2	Standard Pier Details	✓	✓	✓	
SD-3	Abutment Drainage Details	✓			
SD-4	Standard Pile Details	✓	✓		
SD-5	Standard Roadway Bearing Devices	✓	✓	✓	✓
	Bridge Miscellaneous Details		✓	✓	✓
SD-9	Standard Drainage Details		✓	✓	
SD-10	Standard Details for 36" Pipe		✓	✓	
SD-11A	Roadway Expansion Joint Type Y		✓	✓	✓
SD-12A	Roadway Expansion Joint Type Z		✓	✓	✓
SD-17	Standard Bridge Floor Cross Section		✓	✓	✓
	30' Roadway				

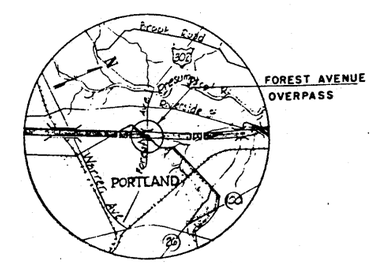

VICINITY MAP
Scale 1" = 1 mile

MAINE TURNPIKE AUTHORITY
MAINE TURNPIKE
SECTION 2 — PORTLAND TO AUGUSTA

STRUCTURE NO. 11 TURNPIKE OVER
FOREST AVENUE
STATION 2487+42.25
GENERAL PLAN AND ELEVATION

HOWARD, NEEDLES, TAMMEN & BERGENDOFF
CONSULTING ENGINEERS
NEW YORK KANSAS CITY

SCALE: 1/16" = 1'-0" except as noted
CONTRACT NO.
SHEET NO. 72 OF 382

NO. 11.01.03					
BY	DATE				
DDG	4-2-54				
		2	As-Built	HBH	1-24-56
HCM	4-3-54	1	Remove Conduits	DDG	4-8-54
IDSK		No.	REVISION	BY	DATE

SHEET NO 83 OF 133

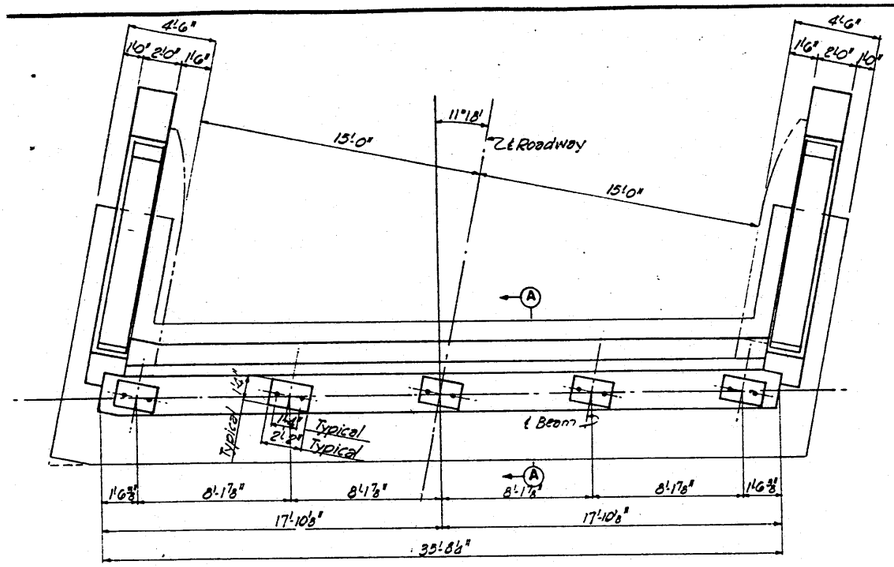

PLAN

ELEVATIONS								
EAST BRIDGE			WEST BRIDGE		EAST BRIDGE		WEST BRIDGE	
Pl.	Abut. 1	Abut. 2	Abut. 1	Abut. 2	Pl.	Pier 1	Pier 2	Pier 1	Pier 2
A	97.32	97.34	97.28	97.37	N	90.31	90.61	90.28	90.62
B	97.27	97.30	97.23	97.33	O	90.34	90.63	90.32	90.64
C	97.29	97.31	97.25	97.35	P	90.42	90.71	90.40	90.73
D	97.24	97.27	97.19	97.31	Q	90.49	90.79	90.47	90.81
E	94.00	94.42	94.36	94.45	R	90.41	90.72	90.39	90.73
F	94.51	94.39	94.33	94.43	S	90.33	90.64	90.30	90.65
G	90.46	90.48	90.42	90.52	T	66.50	66.50	66.50	66.50
H	90.57	90.59	90.53	90.62					
I	90.64	90.66	90.60	90.69					
J	90.71	90.74	90.67	90.77					
K	90.65	90.65	90.59	90.68					
L	90.54	90.56	90.50	90.60					
M	83.38	83.40	83.34	83.44					

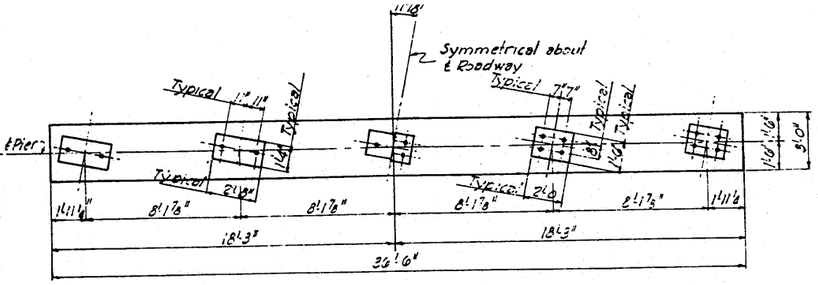

HALF CAP PLAN
PIER 1

HALF CAP PLAN
PIER 2

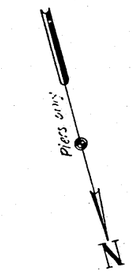

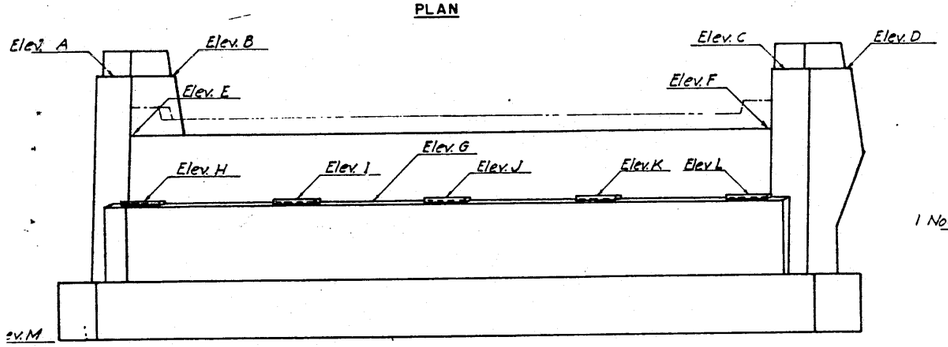

FRONT ELEVATION

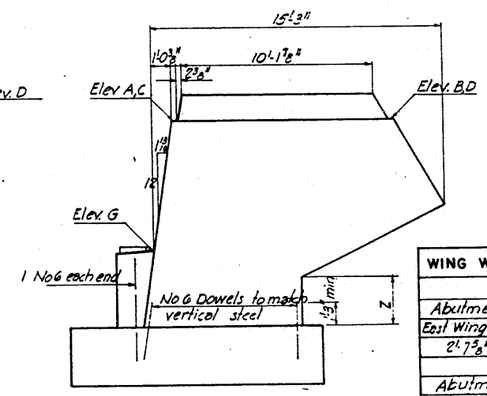

END ELEVATION

WING WALL DIMENSION Z			
EAST BRIDGE			
Abutment No. 1		Abutment No 2	
East Wing	West Wing	East Wing	West Wing
2'-7 5/8"	2'-7 3/8"	2'-7 1/2"	2'-7 3/8"
WEST BRIDGE			
Abutment No 1		Abutment No 2	
East Wing	West Wing	East Wing	West Wing
2'-7 3/8"	2'-7 1/2"	2'-7 1/2"	2'-7 5/8"

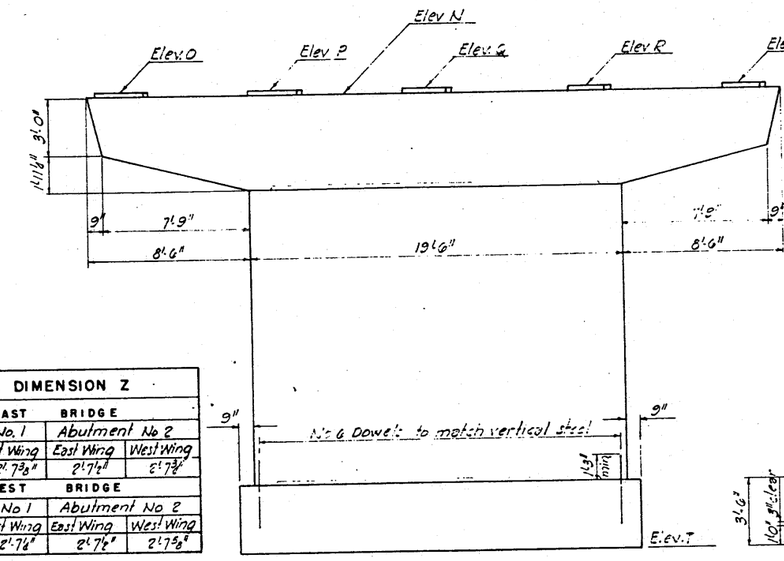

FRONT ELEVATION

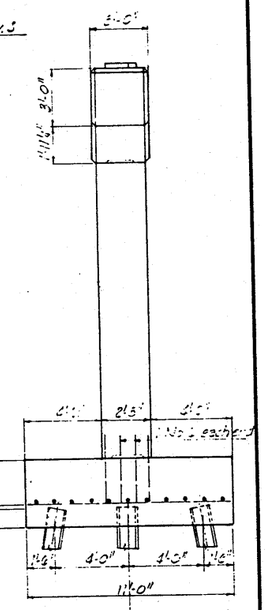

END ELEVATION

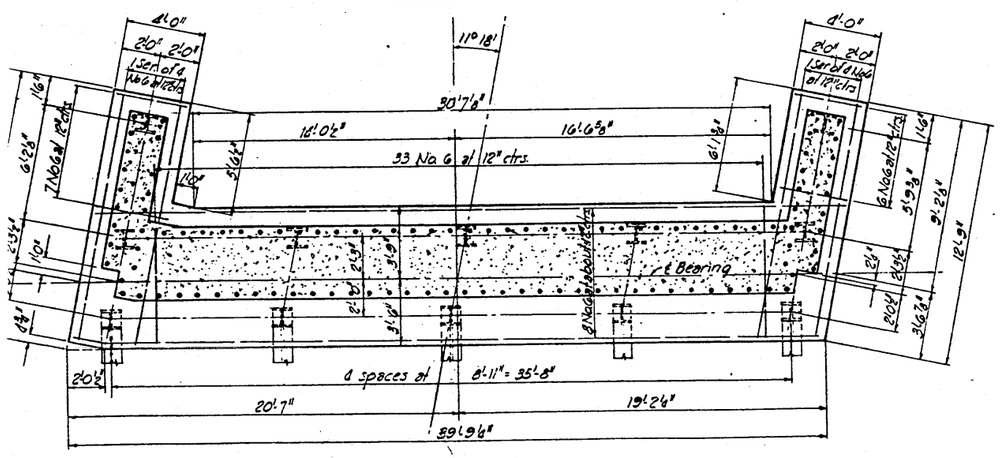

FOOTING PLAN

Note: All piles shall be 10 BP 42.
Batter piles 3" per foot in direction shown.

ABUTMENTS

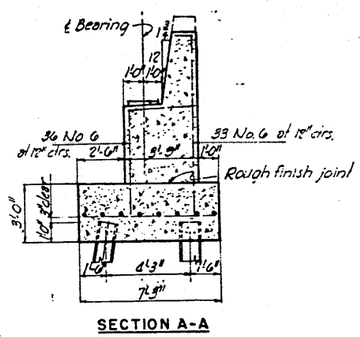

SECTION A-A

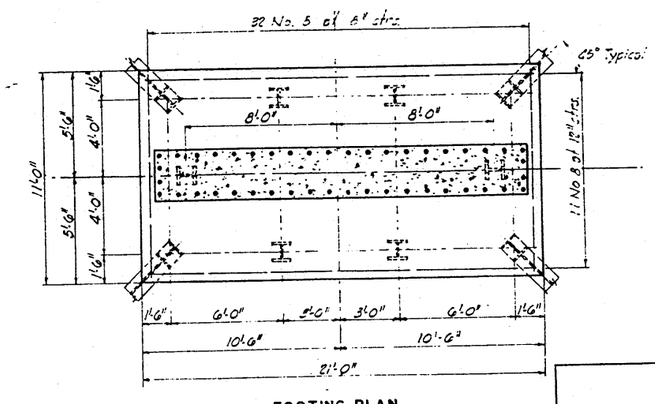

FOOTING PLAN

Note: All piles shall be 12 BP 53.
Batter piles 3" per foot in direction shown.

PIERS

No.	REVISION	BY	DATE
		DDG	3-30-54
2	As-Built	HBH	1-28-56
1	Remove Conduits	DDG	8-8-54

MAINE TURNPIKE AUTHORITY
MAINE TURNPIKE
SECTION 2 — PORTLAND TO AUGUSTA

STRUCTURE NO. 11 — TURNPIKE OVER
FOREST AVENUE
STATION 2487+42.25
ABUTMENTS AND PIERS

HOWARD, NEEDLES, TAMMEN & BERGENDOFF
CONSULTING ENGINEERS
NEW YORK — KANSAS CITY

SCALE: 1/4" = 1'-0"
CONTRACT NO.
SHEET NO. 73 OF 382

SHEET NO. 84 OF 133

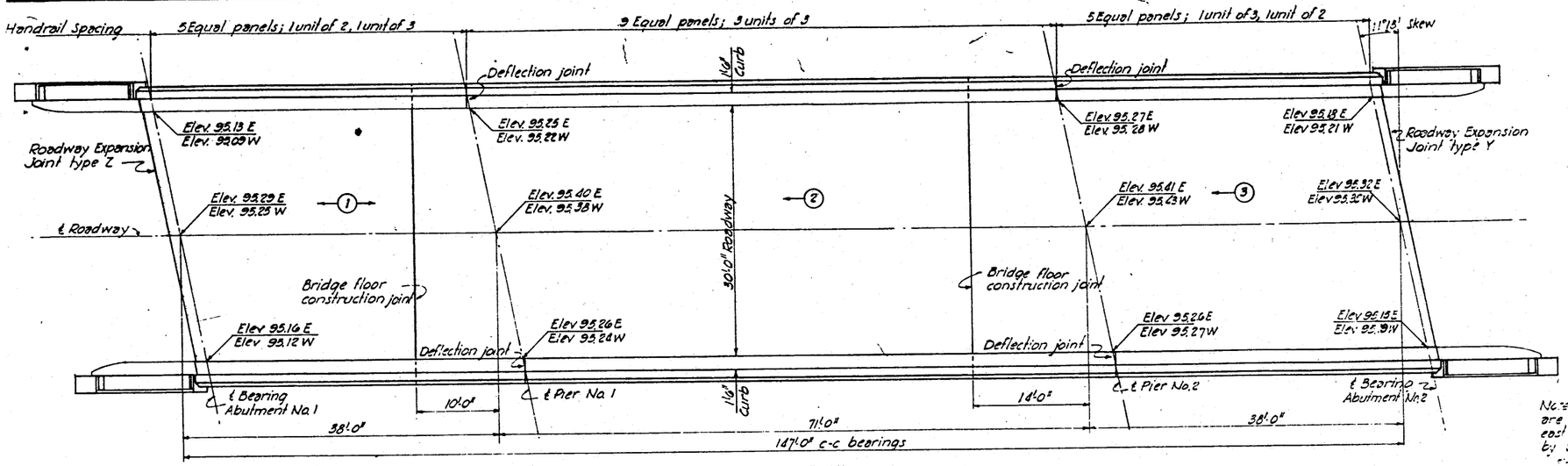

PLAN

Note: Elevations shown on this plan are to top of floor. Elevations for east and west bridges are noted by E and W respectively.

Slab is 6½" non-composite design with 4" bituminous wearing surface as shown on Standard Drawing No. 17.

Sequence and direction of placing concrete are noted by (2).

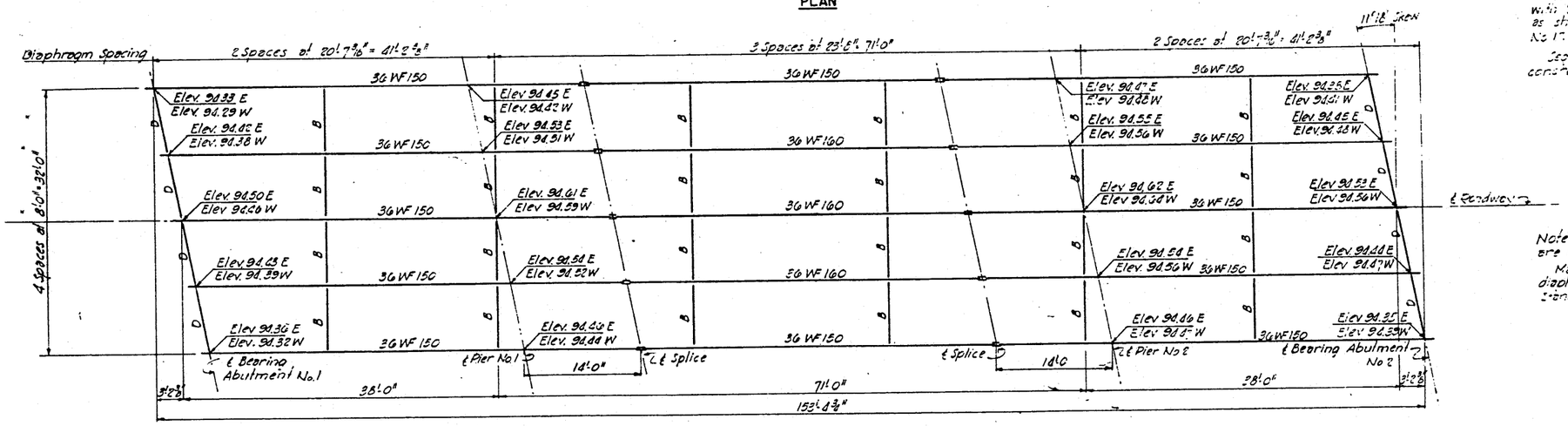

FRAMING PLAN

Note: Elevations shown on Framing Plan are to top of beam flanges.

Marks B and D represent standard diaphragms B and D as shown on Standard Drawing No. 6.

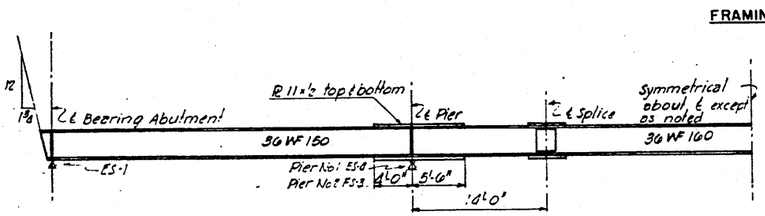

INTERIOR BEAM

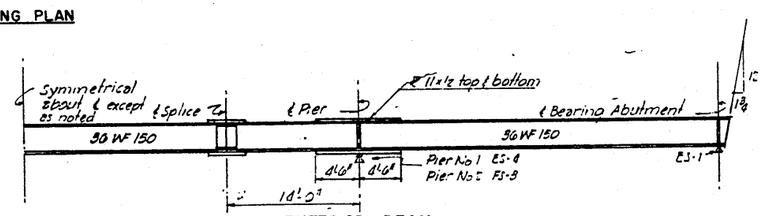

EXTERIOR BEAM

Note: Bevels shown are with respect to beam axis.

All bearing stiffners are 7" x 4" x ⅜" angles.

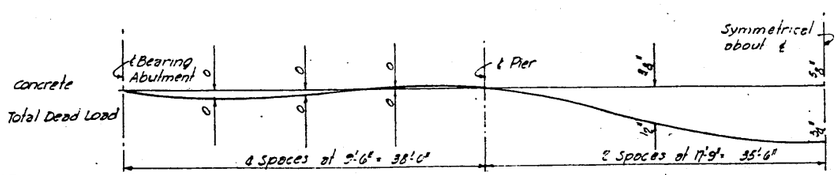

INTERIOR BEAM

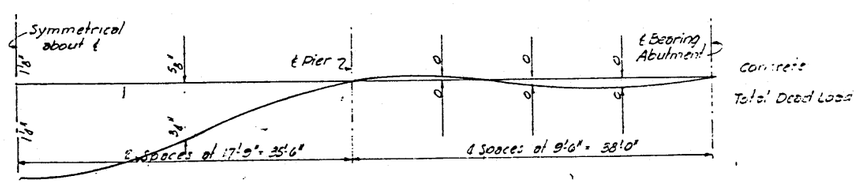

EXTERIOR BEAM

DEAD LOAD DEFLECTION DIAGRAMS
No Scale

	BY	DATE	No.	REVISION	BY	DATE
	DDG	3-31-54				
			2	As-Built	HBH	1-31-56
	WCM	4-3-54	1	Remove Conduit	DDG	6-3-54

DWG NO. 11.03.03

OF 105k

MAINE TURNPIKE AUTHORITY
MAINE TURNPIKE
SECTION 2 — PORTLAND TO AUGUSTA

STRUCTURE NO. 11 TURNPIKE OVER
FOREST AVENUE
STATION 2487 + 42.25
SUPERSTRUCTURE

HOWARD, NEEDLES, TAMMEN & BERGENDOFF
CONSULTING ENGINEERS
NEW YORK KANSAS CITY

SCALE: 1/8" = 1'-0"
CONTRACT NO.
SHEET NO. 74 OF 382

SHEET NO. 85 OF 133

GENERAL NOTES

SPECIFICATIONS

DESIGN

A.A.S.H.T.O. Standard Specifications for Highway Bridges 1977 with interim specifications of 1978.

CONTRACT

State of Maine, State Highway Commission Standard Specifications, Highway and Bridges, revision of June 1968.

LIVE LOADING

H15-44 New County Rd. & Leighton Rd.
HS20-44 So. Portland Interchange, Forest Ave. & Washington St.

ALLOWABLE STRESSES

Concrete (n=10) ~ fc = 1200 p.s.i
Reinforcing Steel, A.S.T.M. Designation A615 Grade 60,
fs = 24,000 p.s.i.

CONCRETE CLASSIFICATION

All concrete shall be Class A

NOTES:

1. Reinforcing steel to have 2" minimum clear cover unless otherwise noted.
2. Chamfer all exposed edges ¾".
3. Place concrete in "A" panels before placing in "B" panels.
4. Plans of existing bridge are available at the Authority's Office at 17 Bishop Street, Portland, Maine.
5. At all contraction joints in concrete curbs, break the bond between the concrete surfaces by a method to be approved by the Engineer. Form a 1" V-Groove on the outside faces of curbs at each contraction joint. Provide a joint in the Vertical Bridge Curb at each contraction joint in the concrete curbs.
6. Do not break the bond between the concrete surfaces of vertical construction joints in superstructure slab. Form a 1" V-Groove on the outside faces of slab at each Construction Joint. See Note A on Sheet 10.
7. Provide 23 gauge galvanized screen over 1"Φ deck drains, ⅛" mesh.
8. Holes in new slab shall be filled with mortar after barrier is removed and before membrane waterproofing is applied
9. The entire traffic side face of the plywood screen shall be painted with yellow traffic paint.
10. Shielding required during concrete removal shall not project below the bottom flanges of beams. The estimated quantity of shielding is the minimum required and is based on the following limits:
    a. Normal to Bridge: as shown on Plans
    b. Parallel to ℄ Bridge:
    - New County Road : Abutment to Abutment
    - So Portland Interchange: Pier 1 to Pier 3
    - Forest Avenue : Pier 1 to Pier 2
    - Leighton Road : Pier 1 to Pier 3
    - Washington St. & M.C.R.R. : Pier 1 to Pier 6
11. The Authority's personal will profile the tops of all stringers after the slab is removed but before the form work is started and supply the contractor with final bottom of slab elevation.

BRIDGE QUANTITIES

ITEM NO	DESCRIPTION	QUANTITIES: NEW COUNTY ROAD	SO. PORTLAND INTERCHANGE	FOREST AVENUE ***	LEIGHTON ROAD	WASH. ST. MCRR	TOTAL	UNIT
506.20	Field Painting, Structural Steel (466 Tons)*	—	—	—	—	1	1	L.S.
202.12	Removal of Existing Structural Concrete	360	1060	1200	910	2150	5680	S.Y.
403.12	Bituminous Concrete Surface Course	20	60	60	40	125	305	Ton.
502.261	Structural Concrete Roadway & Sidewalk Slabs on Steel Bridges (100 C.Y.)*	1	—	—	—	—	1	L.S.
502.262	Structural Concrete Roadway & Sidewalk Slabs on Steel Bridges (250 C.Y.)*	—	1	—	—	—	1	L.S.
502.263	Structural Concrete Roadway & Sidewalk Slabs on Steel Bridges (320 C.Y.)*	—	—	1	—	—	1	L.S.
502.264	Structural Concrete Roadway & Sidewalk Slabs on Steel Bridges (260 C.Y.)*	—	—	—	1	—	1	L.S.
502.265	Structural Concrete Roadway & Sidewalk Slabs on Steel Bridges (510 C.Y.)*	—	—	—	—	1	1	L.S.
502.50	Protective Shield	410	655	665	600	1900	4230	S.Y.
503.12	Reinforcing Steel, Fabricated and Delivered	23700	74900	79200	58000	122500	358300	Lb.
503.13	Reinforcing Steel, Placing	23700	74900	79200	58000	122500	358300	Lb.
504.72	Roadway Expansion Joint	—	—	—	72	—	72	L.F.
504.73	Scuppers	—	—	—	2	—	2	Ea.
508.13	Membrane Waterproofing	310	990	1000	670	2200	5170	S.Y.
514.06	Curing Box for Concrete Cylinders **	1					1	Ea.
515.20	Protective Coating for Concrete Surfaces	90	—	280	310	—	680	S.Y.
507.142	Aluminum Bridge Railing - Type B	215	—	610	510	—	1335	L.F.
609.132	Vertical Bridge Curb Type I (6"x 8½")	210	—	—	—	—	210	L.F.
609.133	Vertical Bridge Curb Type I (6"x 9")	—	—	600	—	—	600	L.F.
609.131	Vertical Bridge Curb Type I (6"x 8")	—	—	—	510	—	510	L.F.

* Approximate quantity for estimating only.
** Curing Box for Concrete Cylinders will be used at all locations.
*** Quantities shown are the totals required for both decks.

REVISION	BY	DATE		BY	DATE
			MADE	R.D.F.	1-79
			TRACED		
			CHECKED	I.S.	1-79
			IN CHARGE OF	J.P.W.	

MAINE TURNPIKE AUTHORITY
MAINE TURNPIKE

GENERAL NOTES & QUANTITIES

HOWARD, NEEDLES, TAMMEN & BERGENDOFF
CONSULTING ENGINEERS
BOSTON

SCALE NONE
SHEET NO. 2 of 16

SHEET No. 96 - 122

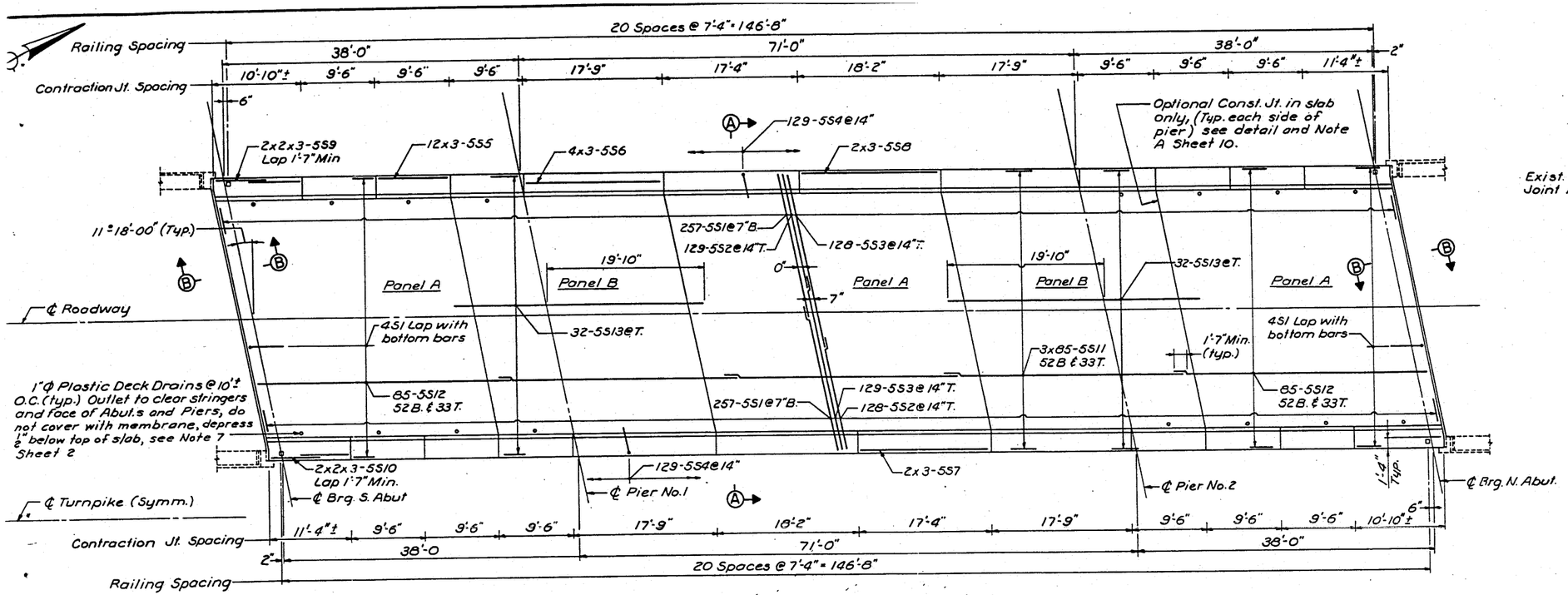

DECK PLAN
1/8" = 1'-0"

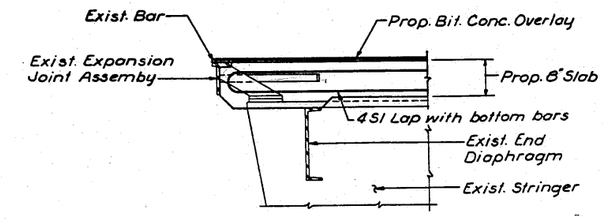

SECTION B-B
3/4" = 1'-0"

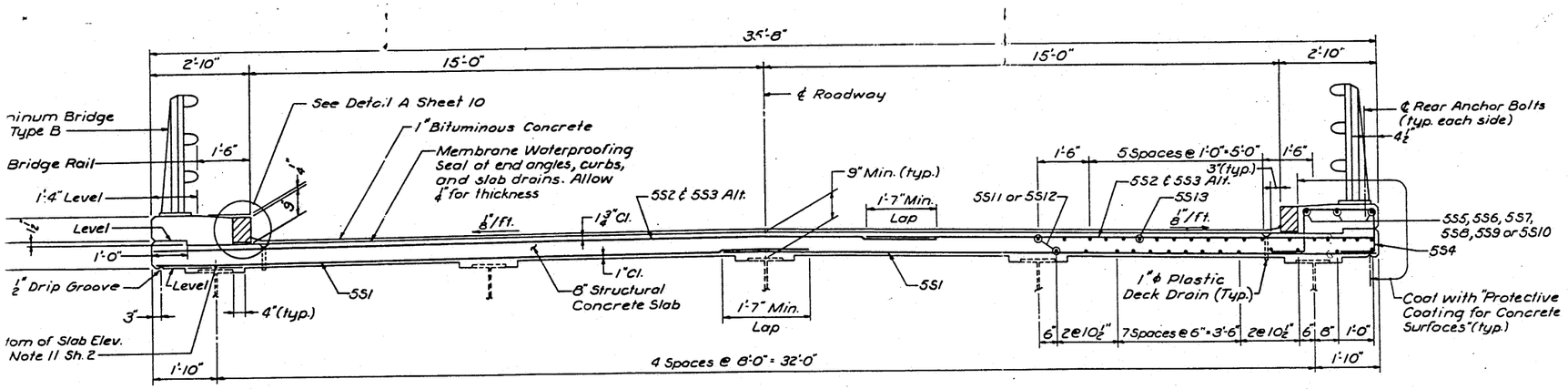

SECTION A-A
1/2" = 1'-0"

NOTES:

1. For General Notes and Quantities, see Sheet 2.
2. S.B. bridge shown, N.B. bridge similar.
3. For shielding limits parallel to bridge, see Note 10 Sheet 2.
4. For 1" V-Groove detail, see Sheet 10.
5. For railing details, see Sheet 11.

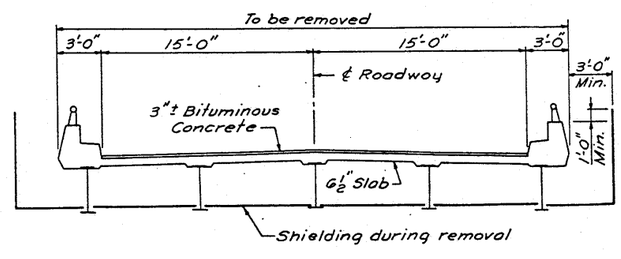

EXISTING DECK REMOVAL
3/16" = 1'-0"

				BY	DATE
			MADE	R.D.F.	1-79
			TRACED		
			CHECKED	I.S.	1-79
VISION	BY	DATE	IN CHARGE OF	J.P.W.	

MAINE TURNPIKE AUTHORITY

MAINE TURNPIKE

FOREST AVENUE
DECK REPLACEMENT

HOWARD, NEEDLES, TAMMEN & BERGENDOFF
CONSULTING ENGINEERS
BOSTON

SCALE AS NOTED

SHEET NO. 5 of 16

SHEET NO. 87 OF 133

SACO INTERCHANGE EXIT 36 (MM 35.7)

REVISION NO.	STATE	PROJECT NUMBER	SHEET NO.	TOTAL SHEETS
1	MAINE	IG-195-2(9)	2	37

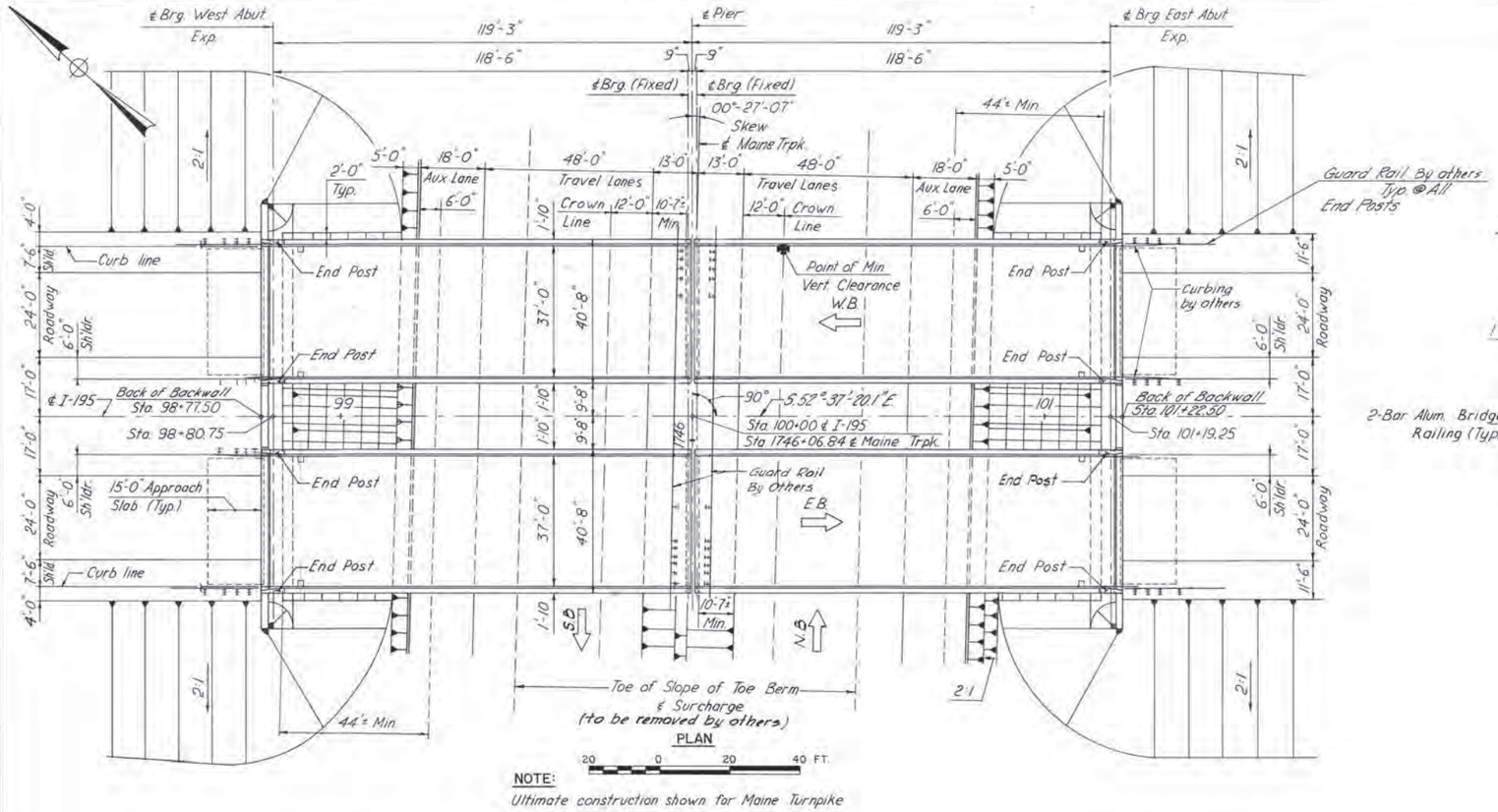

PLAN

20 0 20 40 FT.

NOTE:
Ultimate construction shown for Maine Turnpike

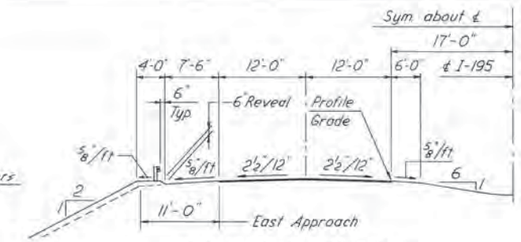

HALF SECTION-ROUTE I-195

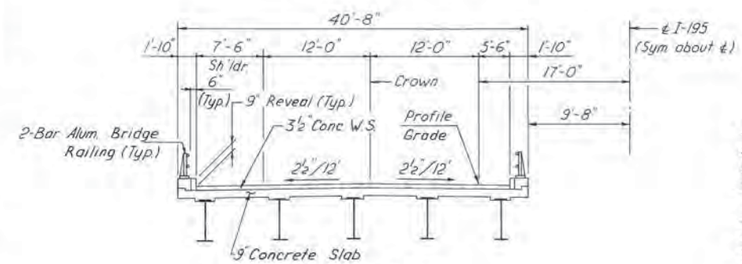

TYPICAL CROSS SECTION

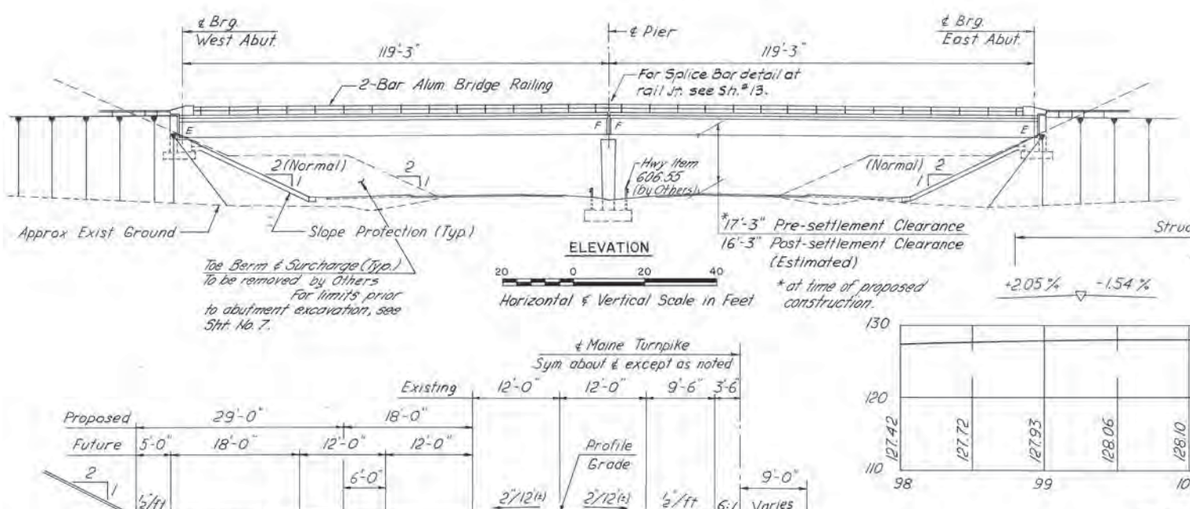

ELEVATION

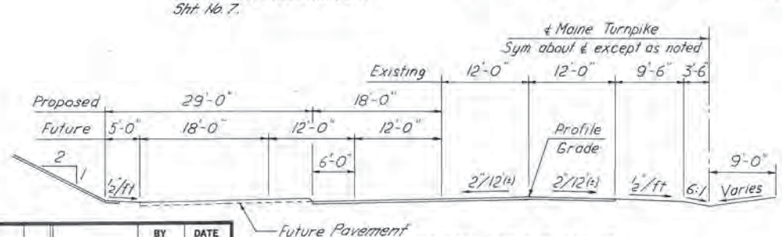

HALF SECTION-MAINE TURNPIKE

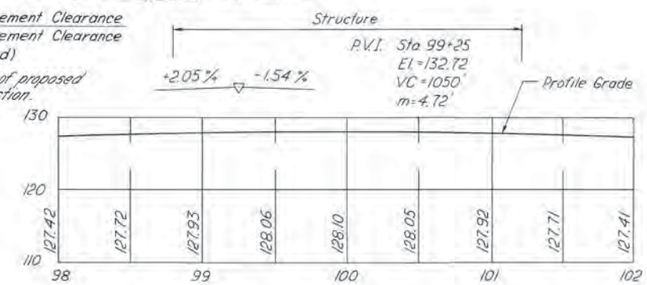

PROFILE - I-195

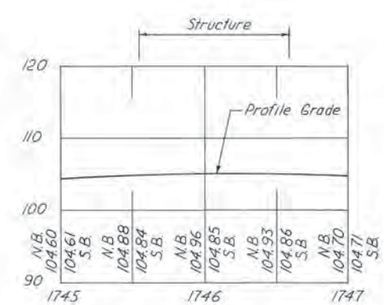

PROFILE - MAINE TURNPIKE

DESIGN

AASHTO Specifications for Highway Bridges 1977 and Interim Specifications 1978 & 1979

CONTRACT

State of Maine, State Highway Commission, Standard Specifications Highway and Bridges, Revision of June 1968.

DESIGN LOADING

LIVE LOAD

HS25 as modified for Interstate

MATERIALS

CONCRETE

Wearing Surface _____ Class AA
Slope Protection _____ Class V
All Others _____ Class A

REINFORCING STEEL

ASTM A615 Grade 60

STRUCTURAL STEEL

Welded Girders ASTM { A572, Grade 50 Flanges; A36 Webs }
High Strength Bolts - ASTM A325
Joints ASTM A588 (any grade)
All Others ASTM A36

BASIC ALLOWABLE STRESSES

REINFORCING STEEL

f_s = 24,000 p.s.i.

STRUCTURAL STEEL

ASTM	A588	f_s = 27,000 p.s.i.
ASTM	A36	f_s = 20,000 p.s.i.
ASTM	A325	f_v = 25,000 p.s.i.
ASTM	A572	f_s = 27,000 p.s.i.

CONCRETE

f_c = 1,200 p.s.i. n = 9

NO.	REVISION	BY	DATE		BY	DATE
				MADE	V.G.	4-81
				TRACED		
				CHECKED	N.F.O.	4-81
				IN CHARGE OF J.A.E.		

STATE OF MAINE
DEPARTMENT OF TRANSPORTATION

ROUTE I-195
OVER
MAINE TURNPIKE

GENERAL PLAN

SACO, MAINE

R92-193

HNTB
HOWARD NEEDLES TAMMEN & BERGENDOFF
CONSULTING ENGINEERS BOSTON

SHEET 2 OF 16 AUGUSTA, MAINE

FHWA REG. NO.	STATE	PROJECT NUMBER	SHEET NO.	TOTAL SHEETS
	MAINE	IG-195-2(9)	12	37

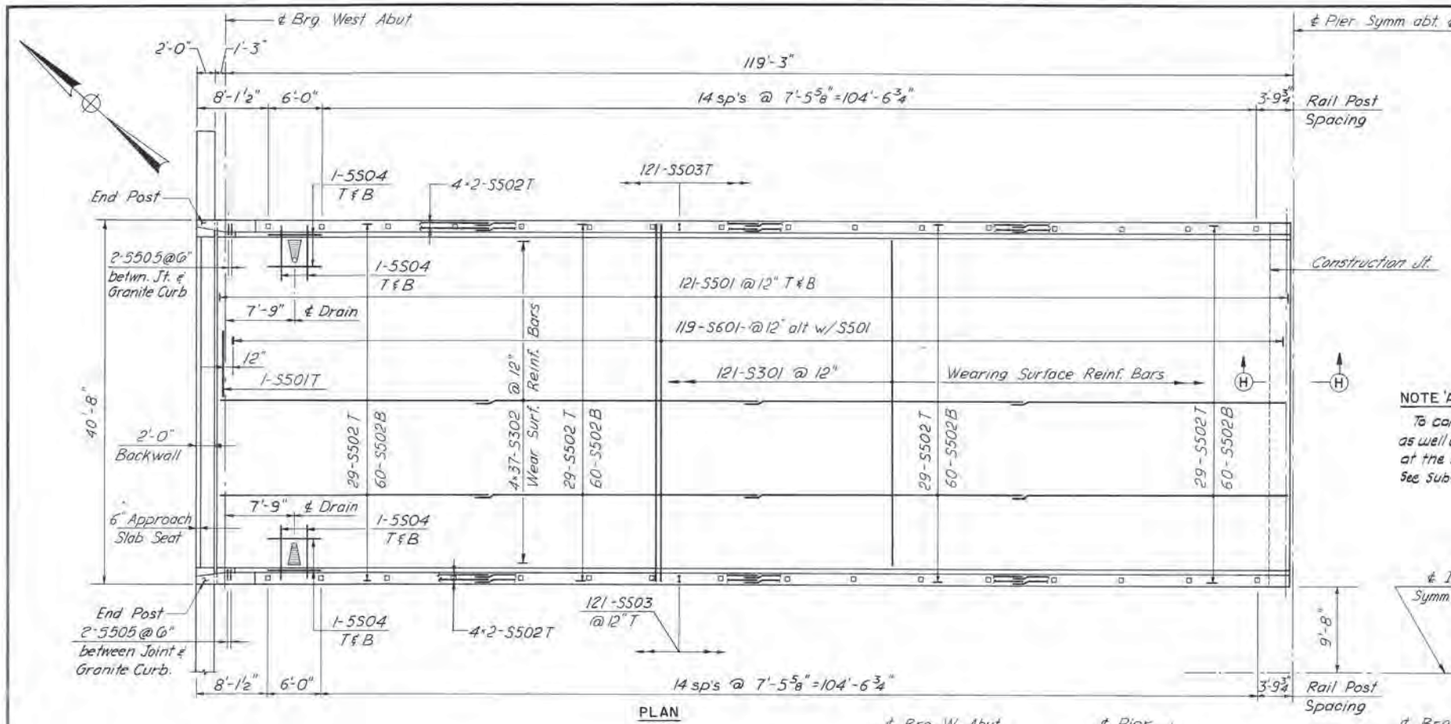

PLAN

BOTTOM OF SLAB ELEVATIONS AT BLOCKING POINTS

Stringer No	℄ Brg W. Abut.	Span 1 .1L1	.2L1	.3L1	.4L1	.5L1	.6L1	.7L1	.8L1	.9L1	℄ Brg Pier
S1	126.69	126.84	126.97	127.08	127.16	127.20	127.21	127.17	127.12	127.03	126.93
S2	126.87	127.02	127.15	127.20	127.34	127.38	127.39	127.35	127.30	127.21	127.11
S3	127.05	127.20	127.33	127.44	127.52	127.56	127.57	127.53	127.48	127.39	127.29
S4	126.91	127.06	127.19	127.30	127.38	127.42	127.43	127.39	127.34	127.25	127.15
S5	126.73	126.88	127.01	127.12	127.20	127.24	127.25	127.21	127.16	127.07	126.97

Stringer No	℄ Brg Pier	Span 2 .1L2	.2L2	.3L2	.4L2	.5L2	.6L2	.7L2	.8L2	.9L2	℄ Brg E. Abut.
S1	126.93	127.03	127.12	127.17	127.21	127.20	127.16	127.08	126.97	126.84	126.69
S2	127.11	127.21	127.30	127.35	127.39	127.38	127.34	127.26	127.15	127.02	126.87
S3	127.29	127.39	127.48	127.53	127.57	127.56	127.52	127.44	127.33	127.20	127.05
S4	127.15	127.25	127.34	127.39	127.43	127.42	127.38	127.30	127.19	127.06	126.91
S5	126.97	127.07	127.16	127.21	127.25	127.24	127.20	127.12	127.01	126.88	126.73

NOTE 'A'

To compensate for all dead load deflections except structural steel, as well as possible irregularities in girders, set the bottom of slab elevations at the blocking points indicated before any of the slab formwork is started. See Subsection 502.10(a) of the Standard Specifications.

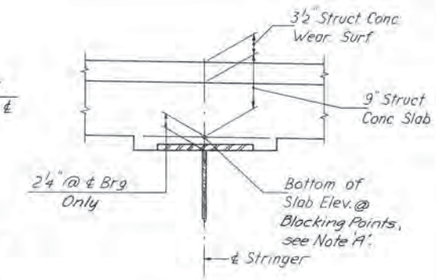

BLOCKING DETAIL

SUPERSTRUCTURE NOTES:

1. Chamfer all exposed edges of concrete a consistent dimension between ½" & ¾" inclusive, unless otherwise indicated.
2. Form a 1 inch V-groove at the horizontal joint between the curb & slab.
3. Reinforcing steel to have a minimum cover of 2" unless otherwise indicated.
4. Mortar for bedding and for joints in the granite curb shall contain an approved non-shrink additive.
5. The superstructure slab concrete shall be placed continuously and kept plastic until the entire slab concrete has been placed. Set retarding admixture shall be used when authorized by the Engineer.
6. Adjust reinforcing steel to fit around the drains in a manner approved by the Engineer. Do not cut transverse reinforcing bars.
7. Protective Coating for Concrete Surfaces shall be applied to the following areas: Top of concrete curb, Facia down to drip notch and Concrete wearing surface.

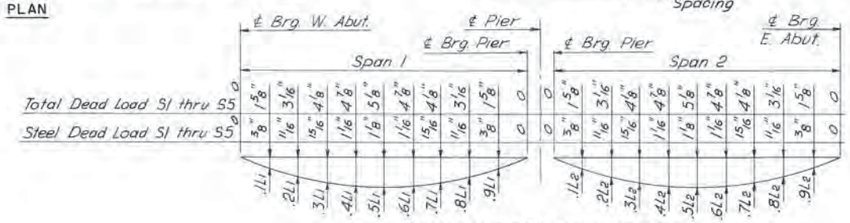

DEAD LOAD DEFLECTION DIAGRAM

NOTES:

1. For additional details & dimensions not shown for curb and roadway see std detail sheet BD 104-77.
2. For 2-bar Alum Bridge Railing details see std detail sheet BD 114-77.
3. For End Post Details see sheet No. 13.
4. For Joint Details see sheet No. 14.
5. For Reinforcing Steel Schedule see sheets No. 15 & 16.
6. For Drain Details see sheet BD 104-77.
7. For Section H-H, see Shf. No. 11.

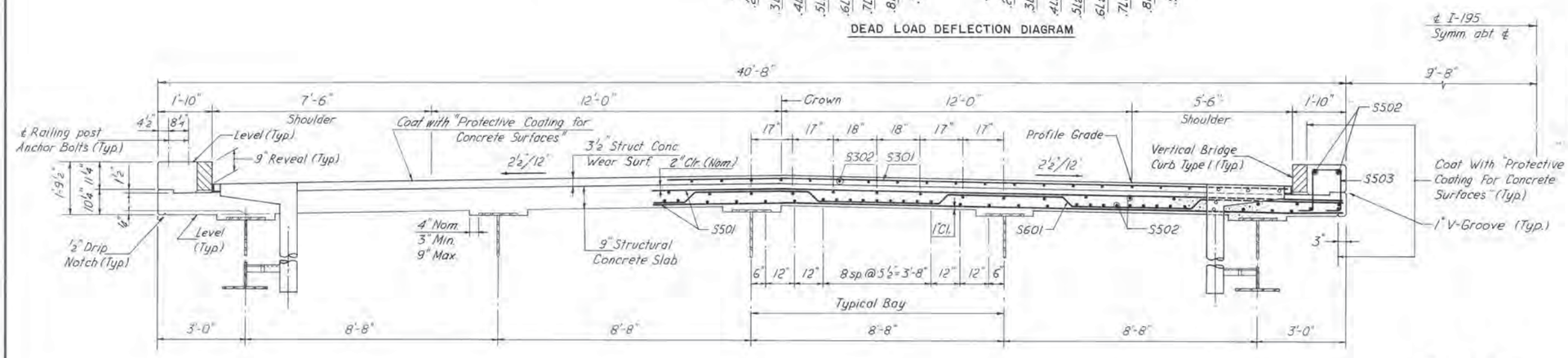

TRANSVERSE SECTION

NO.	REVISION	BY	DATE

	BY	DATE
MADE	V.G.	4-81
TRACED		
CHECKED	N.F.O.	4-81
IN CHARGE OF	J.A.E.	

R92-203

HNTB
HOWARD NEEDLES TAMMEN & BERGENDOFF
CONSULTING ENGINEERS BOSTON

STATE OF MAINE
DEPARTMENT OF TRANSPORTATION

ROUTE I-195
OVER
MAINE TURNPIKE

SUPERSTRUCTURE DETAILS

SACO, MAINE

SHEET 12 OF 16 AUGUSTA, MAINE

SCARBOROUGH INTERCHANGE EXIT 42 (MM 42.5)

F.H.W.A. REG. NO.	STATE	PROJECT NUMBER	SHEET NO.	TOTAL SHEETS
1	MAINE	2935.10	82	106

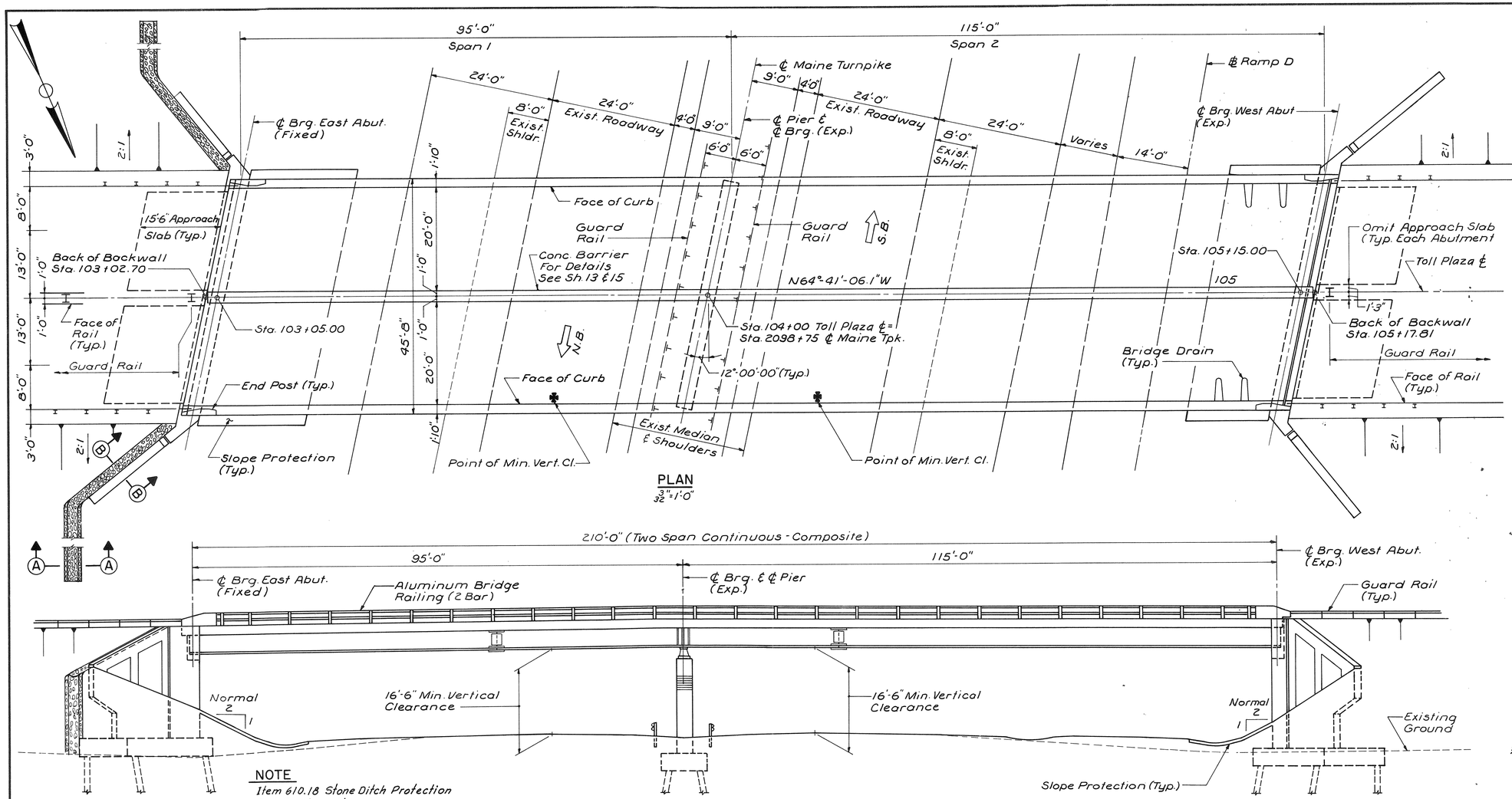

PLAN
3/32" = 1'-0"

ELEVATION
3/32" = 1'-0"

NOTE
Item 610.18 Stone Ditch Protection Is A Roadway Item

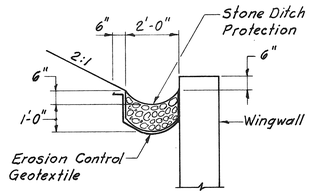

SECTION B-B
3/8" = 1'-0"

For Section A-A See Standard Details

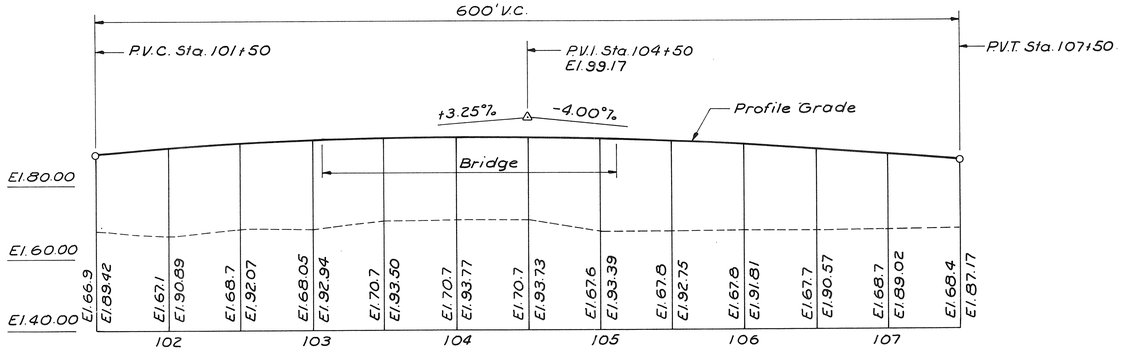

PROFILE - TOLL PLAZA ℄
Scale: Hor. 1" = 50'
Vert. 1" = 20'

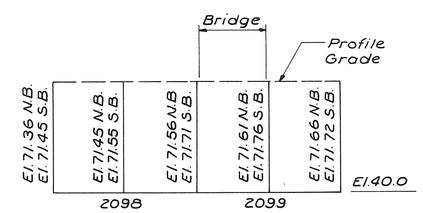

PROFILE - MAINE TURNPIKE
Scale: Hor. 1" = 50'
Vert. 1" = 20'

INDEX OF SHEETS

1. General Plan & Elevation
2. Quantities & Cross Sections
3. Boring Details I
4. Boring Details II
5. Foundation Plan
6. East Abutment
7. West Abutment
8. Abutment & Wingwall Details I
9. Abutment & Wingwall Details II
10. Pier
11. Framing Plan & Details
12. Structural Steel Details
13. Superstructure Details I
14. Superstructure Details II
15. Barrier Details
16. Slope Protection
17. Reinforcing Steel Schedule
18. Reinforcing Steel Schedule

STANDARD SHEETS

Bearing Pedestals — BD 102-89
Diaphragms & Crossframes — BD 112-89
Aluminum Bridge Railing — BD 401-89
Concrete End Post — BD 201-89
Expansion Device-Gland Seal — BD 302-89
Substructure Details — BD 501-89
Superstructure Details — BD 521-89

DESIGN
Load Factor Design Per AASHTO. Standard Specifications For Highway Bridges 1989.

CONTRACT
State of Maine Department of Transportation, Standard Specifications, Highways & Bridges, Revision of July, 1988

DESIGN LOADING

LIVE LOAD
HS 25 2,000,000 Cycles

MATERIALS

CONCRETE
All Concrete Shall Be Class A

REINFORCING STEEL
ASTM A615 Grade 60

STRUCTURAL STEEL
Welded Girders ASTM { A709 Grade 50 Flanges / A709 Grade 36 Webs
* High Strength Bolts - ASTM A325
Bearing Pedestals - ASTM A709 Grade 50
All Others - ASTM A709 Grade 36

BASIC ALLOWABLE STRESSES

REINFORCING STEEL
fy = 60,000 p.s.i.

STRUCTURAL STEEL
ASTM A572 Fy = 50,000 p.s.i.
ASTM A36 Fy = 36,000 p.s.i.
ASTM A325 Fv = 21,300 p.s.i.

CONCRETE
fc = 1,600 p.s.i. n = 8

* A709 Grade 50 = A572 Grade 50
A709 Grade 36 = A36

NO.	REVISION	BY	DATE

	BY	DATE
DESIGNED:	K.A.C.	4-87
DRAWN:	R.D.F.	5-87
CHECKED:	K.A.C.	4-87
IN CHARGE OF	R.A.L.	

STATE OF MAINE
DEPARTMENT OF TRANSPORTATION

SCARBOROUGH INTERCHANGE
OVER
MAINE TURNPIKE
GENERAL PLAN & ELEVATION
SCARBOROUGH, MAINE

SHEET 1 OF 18 AUGUSTA, MAINE

F.H.W.A. REG. NO.	STATE	PROJECT NUMBER	SHEET NO.	TOTAL SHEETS
1	MAINE	2935.10	83	106

BRIDGE QUANTITIES

ITEM NO.	DESCRIPTION	QUANTITY	UNIT
203.25	Granular Borrow	1600	C.Y.
203.26	Gravel Borrow	250	C.Y.
206.082	Structural Earth Excavation - Major Structures	180	C.Y.
206.10	Structural Earth Excavation - Piers	100	C.Y.
403.08	Hot Bituminous Pavement Grading C	175	Ton
501.216	Steel H-Beam Piles, 73 Lbs/Ft.	9295	L.F.
501.23	Loading Test	2	Each
502.21	Structural Concrete, Abutments & Retaining Walls	759	C.Y.
502.23	Structural Concrete, Piers	100	C.Y.
502.26	Structural Conc. Roadway & Sidewalk Slabs On Steel Bridges (331 C.Y.)	1	L.S.
502.31	Structural Concrete, Approach Slab (30 C.Y.)	1	L.S.
503.12	Reinforcing Steel, Fabricated & Delivered	65800	Lb's
503.13	Reinforcing Steel, Placing	65800	Lb's
503.14	Reinforcing Steel, Fabricated & Delivered (Epoxy-Coated)	90800	Lb's
503.15	Reinforcing Steel, Placing (Epoxy-Coated)	90800	Lb's
504.70	Structural Steel, Fabricated & Delivered (156,200 Lb's A709 Gr.36, 171,300 Lb's A709 Gr.50)	1	L.S.
504.71	Structural Steel, Erection (156,200 Lbs A709 Gr.36, 171,300 Lbs A709 Gr.50)	1	L.S.
505.08	Shear Connectors (3096 Units)	1	L.S.
506.141	Field Painting New Structural Steel (164 Ton)	1	L.S.
507.092	Aluminum Bridge Railing, 2 Bar	410	L.F.
508.13	Membrane Waterproofing (1015 S.Y.)	1	L.S.
512.08	French Drains	180	L.F.
513.09	Slope Protection - Portland Cement Concrete	230	S.Y.
514.06	Curing Box For Concrete Cylinders	1	Each
515.21	Protective Coating For Concrete Surfaces (480 S.Y.)	1	L.S.
520.21	Expansion Device - Gland Seal (47 L.F.)	1	Each
609.132	Vertical Bridge Curb - Type 1B	416	L.F.

* SEE SH. 1 FOR STEEL GRADE CLARIFICATION

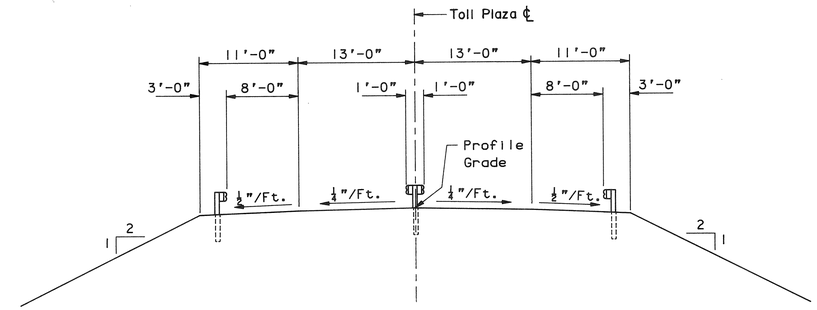

TYPICAL APPROACH SECTION
⅛" = 1'-0"

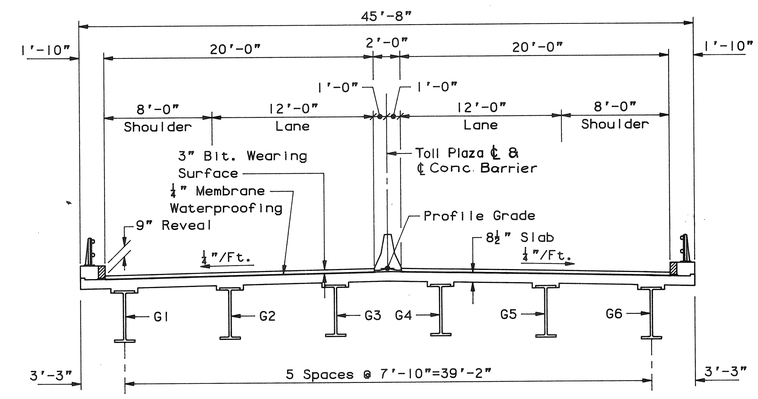

TYPICAL DECK SECTION
3/16" = 1'-0"

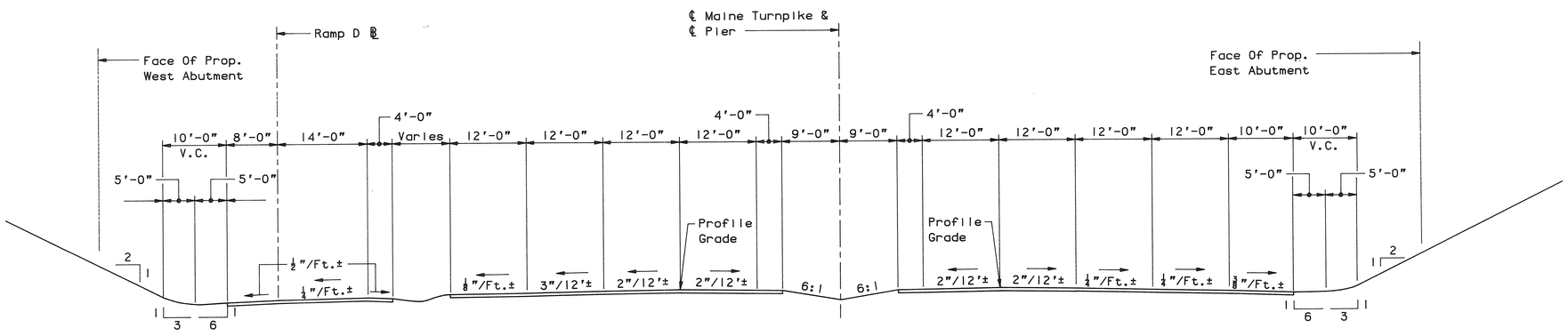

CROSS SECTION - MAINE TURNPIKE
1"=10'

NO.	REVISION	BY	DATE

	BY	DATE
DESIGNED:	KAC	4/87
DRAWN:	JBC	5/87
CHECKED:	KAC	5/87
IN CHARGE OF R.A.L.		

STATE OF MAINE
DEPARTMENT OF TRANSPORTATION

SCARBOROUGH INTERCHANGE
OVER
MAINE TURNPIKE

TYPICAL CROSS SECTIONS

SCARBOROUGH, MAINE

SHEET 2 OF 18 AUGUSTA, MAINE

F.H.W.A. REG. NO.	STATE	PROJECT NUMBER	SHEET NO.	TOTAL SHEETS
1	MAINE	2933.10	94	106

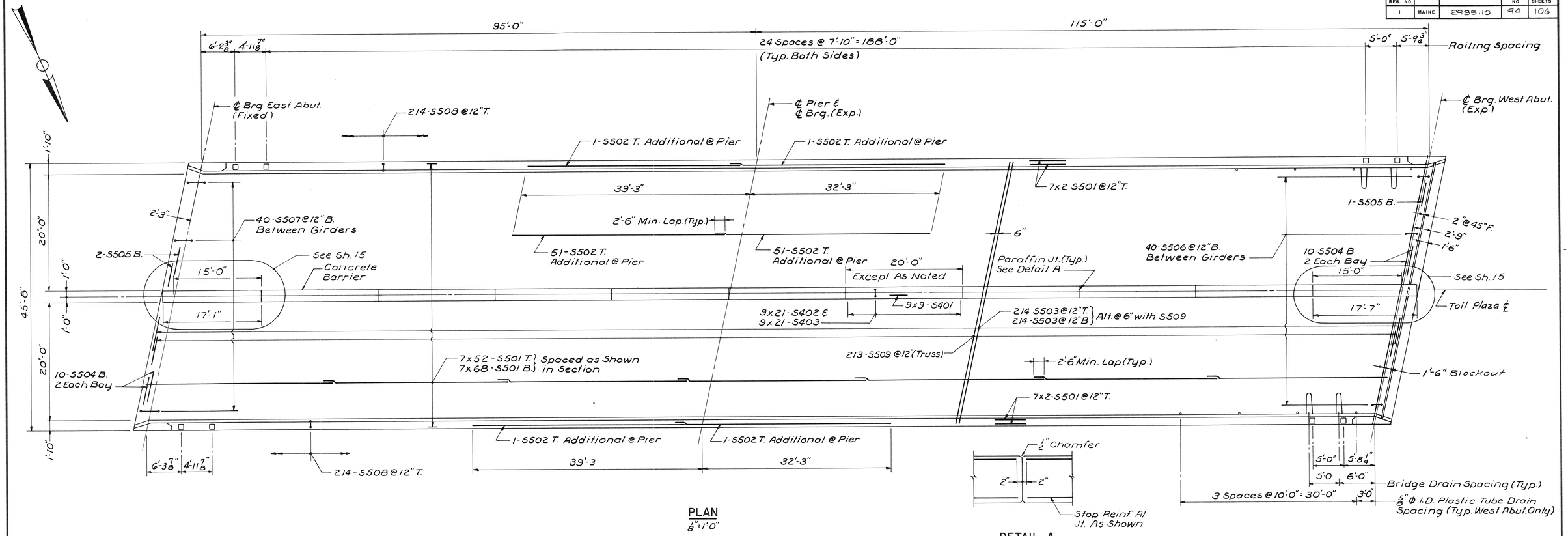

PLAN
1/8" = 1'-0"

DETAIL A
1/2" = 1'-0"

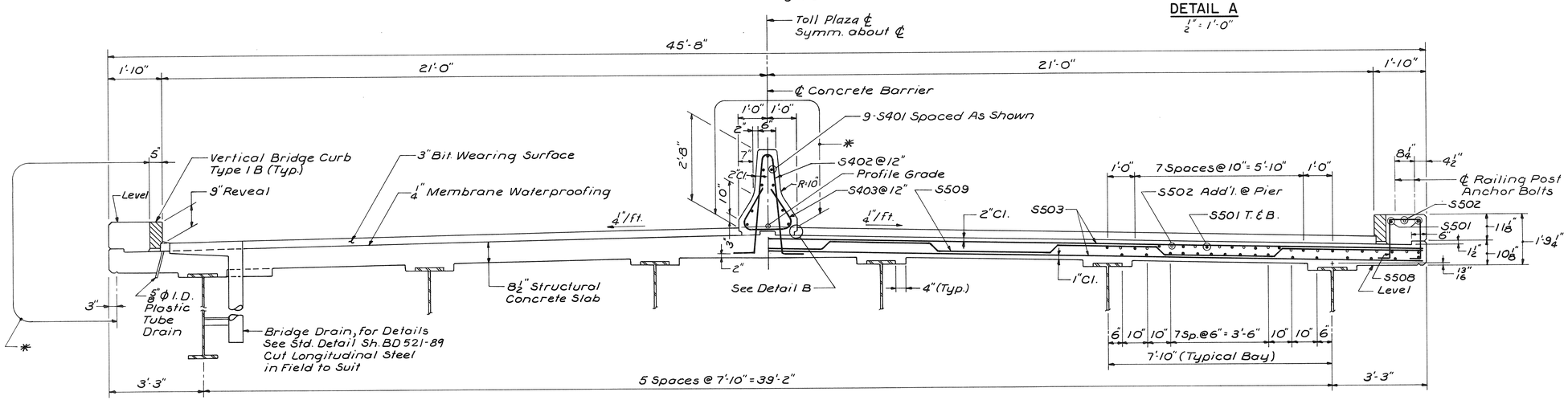

* Coat with "Protective Coating for Concrete Surfaces"

TYPICAL DECK SECTION
1/2" = 1'-0"

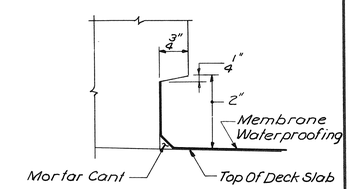

DETAIL B
Half Size

NOTES:

1. All Deck & Barrier Reinforcement is Epoxy Coated.
2. Place Concrete Barrier in Alternate Sections.

NO.	REVISION	BY	DATE

	BY	DATE
DESIGNED:	D.W.R.	1-87
DRAWN:	R.D.F.	5-87
CHECKED:	K.A.C.	6-87
IN CHARGE OF	R.A.L.	

STATE OF MAINE
DEPARTMENT OF TRANSPORTATION

SCARBOROUGH INTERCHANGE

OVER

MAINE TURNPIKE

SUPERSTRUCTURE DETAILS I

SCARBOROUGH, MAINE

SHEET 13 OF 18 AUGUSTA, MAINE

GORHAM ROAD OVER I-295 RAMP (MM 44.0)

B. P. R. REG. NO.	STATE	PROJECT NUMBER	SHEET NO.	TOTAL SHEETS
1	MAINE	I-295-3(56)	34	77

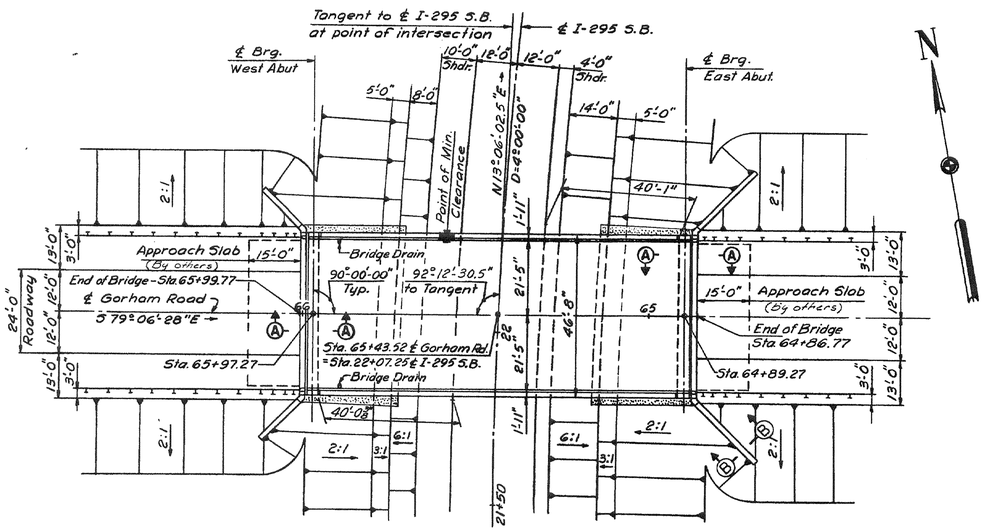

PLAN
1" = 20'

ITEM NO.	DESCRIPTION	QUANTITY	UNIT
203.25	Granular Borrow	850	C.Y.
206.08	Structural Earth Excavation-Abut. & Retaining Walls	1300	C.Y.
501.214	Steel H-beam Piles 53 lbs./ft.	7,650	L.F.
502.21	Structural Concrete, Abutment & Retaining Walls	585	C.Y.
502.2602	Structural Concrete, Roadway & Sidewalk Slabs on Steel Bridges	1	L.S.
503.12	Reinforcing Steel Fabricated and Delivered	73000	Lbs.
503.13	Reinforcing Steel, Placing	73000	Lbs.
504.7002	Structural Steel, Fabricated and Delivered	1	L.S.
504.7102	Structural Steel, Erection	1	L.S.
505.1202	Shear Connectors	1	L.S.
506.1402	Field Painting, Structural Steel	1	L.S.
507.08	Bridge Railing	205	L.F.
512.06	French Drains	120	C.Y.
514.06	Curing Box For Concrete Cylinders	1	Ea.
515.20	Protective Coating For Concrete Surfaces	100	S.Y.
609.13	Vertical Bridge Curb-Type 1	215	L.F.
639.08	Field Office, Type A	1	Ea.

NOTE:
Estimated Quantity of Structural Steel, Fab., Del., Erected & Painted 154,000 Lbs.
Estimated Quantity of Shear Connectors ———— 924 Ea. (906 Lbs.)
Estimated Quantity of Concrete Item 502.2602—150 C.Y.

SPECIFICATIONS

DESIGN
A.A.S.H.O. Standard Specifications for Highway Bridges 1969 with Interim Specifications, 1970.

CONTRACT
State of Maine, State Highway Commission Standard Specifications for Highway and Bridges, Revision of June 1968

LIVE LOADING

HS 20-44

FOUNDATION

Abutments - 12BP53 End Bearing Piles with a total capacity of 70 Tons. Design capacity of 53 Tons, allowance of 17 Tons for negative skin friction.

ALLOWABLE STRESSES

Concrete: (n=10) ~ fc = 1200 p.s.i.
Reinforcing Steel: A.S.T.M. Desig. A615, Grade 60, fs = 24,000 p.s.i.
Structural Steel: A.S.T.M. Designation A572-50 for Main Beam Material, fs = 27,000 p.s.i. up to 1½" th. inclusive; all other structural steel A.S.T.M. Designation A-36, fs = 20,000 p.s.i.

CONCRETE CLASSIFICATION

All concrete shall be Class "A"

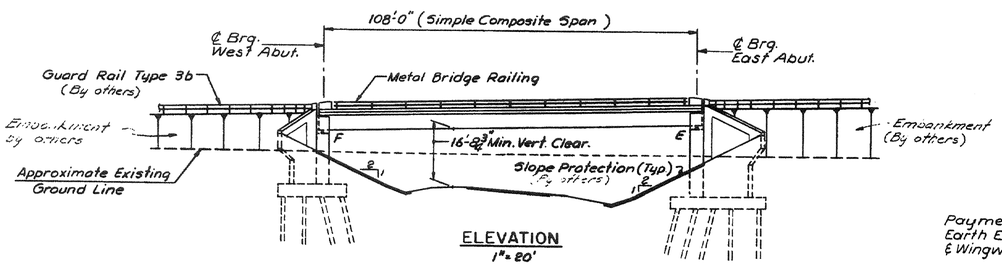

ELEVATION
1" = 20'

Limits for Excavation and Granular Backfill are as shown in sections A-A & B-B

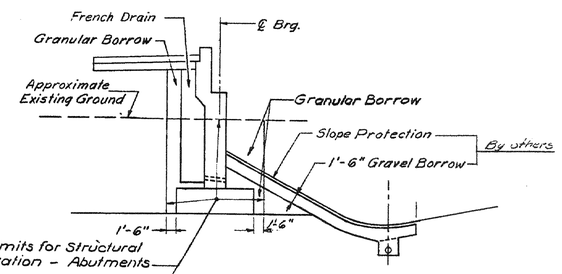

SECTION A-A
1" = 10'

NOTE:
Payment for clearing required for construction under this contract will be incidental to the various contract items

INDEX OF SHEETS

1. GENERAL PLAN, PROFILES & QUANTITIES
2. FOUNDATION SURVEY
3. BORING DETAILS
4. FOOTING PLANS AND APPROACH SLAB
5. WEST ABUTMENT
6. EAST ABUTMENT
7. STRUCTURAL STEEL AND BLOCKING POINTS
8. STRUCTURAL STEEL DETAILS
9. SUPERSTRUCTURE DETAILS
10. MISCELLANEOUS CONCRETE DETAILS
11. SLOPE PROTECTION
12. REINFORCING STEEL SCHEDULE

STANDARD SHEETS

BD 101-70 BEARING PEDESTALS JAN. 1970
BD 104-66 DIAPHRAGM, ARMORED JOINTS, SHEAR CONNECTORS, DRAIN, SEPT. 1966
BD 106-69 ALUMINUM RAILING JAN. 1969 (REV. 3-25-70)
Guard Rail August 1969 (6)

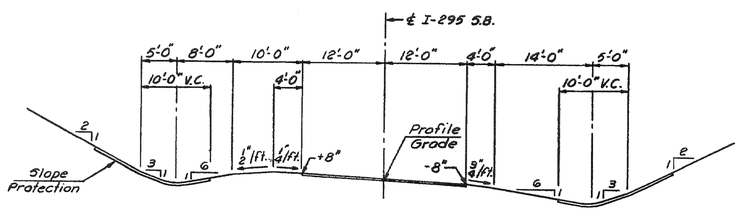

SECTION I-295 S.B.
1" = 10'

NOTE:
All dimensions are measured radial.

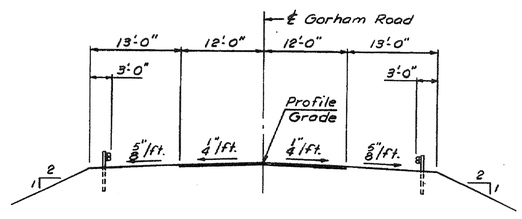

APPROACH SECTION
1" = 10'

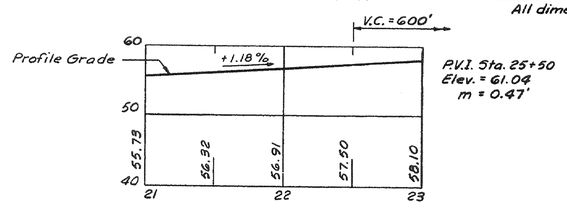

PROFILE - I-295 S.B.
Hor. 1" = 50'
Vert. 1" = 10'

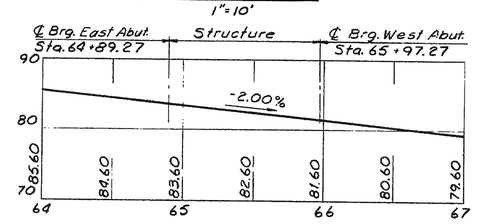

PROFILE - GORHAM ROAD
Hor. 1" = 50'
Vert. 1" = 10'

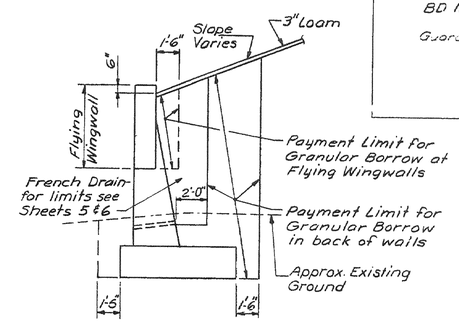

SECTION B-B
No Scale

NOTE:
Typical all wingwalls.
See Sect A-A for typical limit of work

HOWARD, NEEDLES, TAMMEN & BERGENDOFF
CONSULTING ENGINEERS
BOSTON

DESIGN— E.F.K. DETAIL- J.M.M.
TRACE—
CHECK— I.S.
BRIDGE NO.
SURVEY—
PLOT—

STATE HIGHWAY COMMISSION
BRIDGE DIVISION

GORHAM ROAD
OVER
I-295 S.B.
IN THE TOWN OF
SCARBOROUGH
CUMBERLAND COUNTY

GENERAL PLAN, PROFILES & QUANTITIES

SHEET 1 OF 12 AUGUSTA, MAINE AUGUST 1971

150-64-5

SCARBOROUGH I-295-3(56) 150-64

U. P. R. REG. NO.	STATE	PROJECT NUMBER	SHEET NO.	TOTAL SHEETS
1	MAINE	I-295-3(56)	42	77

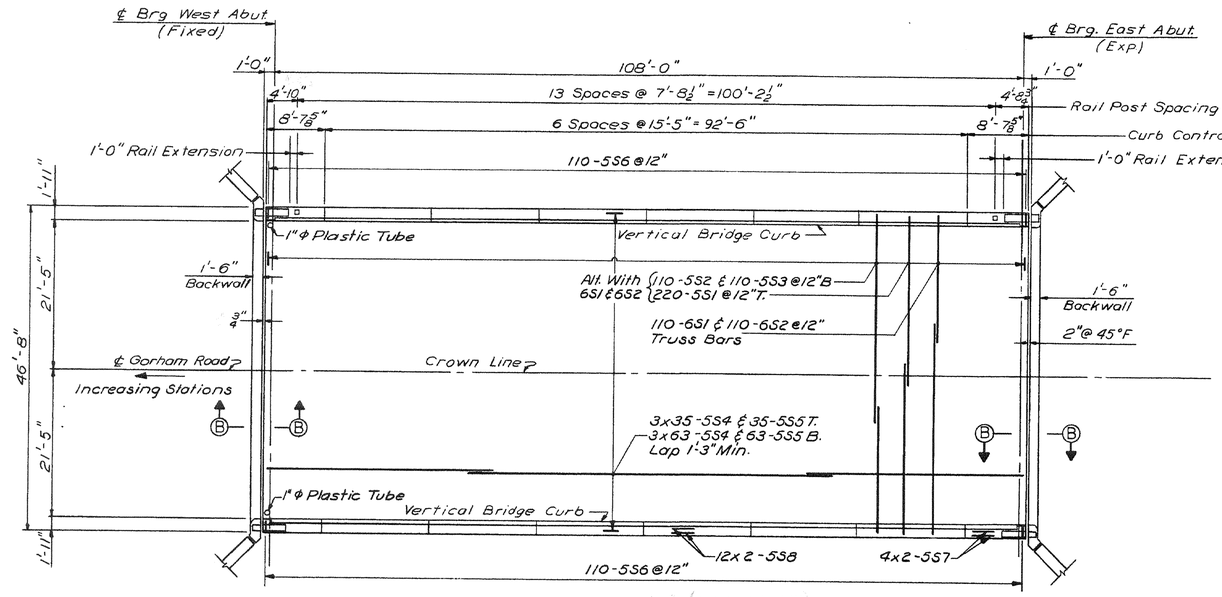

PLAN
1" = 10'

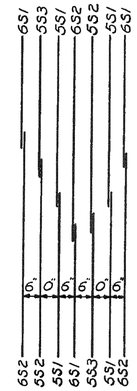

DECK REINFORCING PLACING PATTERN
No Scale

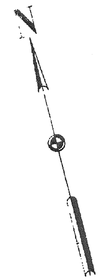

GENERAL SUPERSTRUCTURE NOTES

1. At all contraction joints in concrete curbs, break the bond between the concrete surfaces by a method to be approved by the Engineer. Form a 1" V-Groove on the outside faces of curbs at each curb joint. Provide a joint in the Vertical Bridge Curb at each contraction joint in the concrete curbs. Chamfer exposed edges of concrete ½" unless noted.
2. For bridge rail, see Standard Detail Sheet BD106-69.
3. Vertical Bridge Curb will be paid for under item 609.13. For detail see Sheet 10.
4. For 1" V Groove and end post detail on superstructure see Sheet 10.
5. Reinforcing steel to have 2" minimum cover unless otherwise noted.
6. For Deck Joint details at abutments, see Sheet 8.
7. For Section B-B see Sheet 8.

BRIDGE DRAIN NOTES

1. One bridge drain each side at West Abutment (2 required)
2. Drains shall be placed so that they are at least 5'-0" clear of abutment, exact position to be determined in the field. For approximate location see Sheet 1.

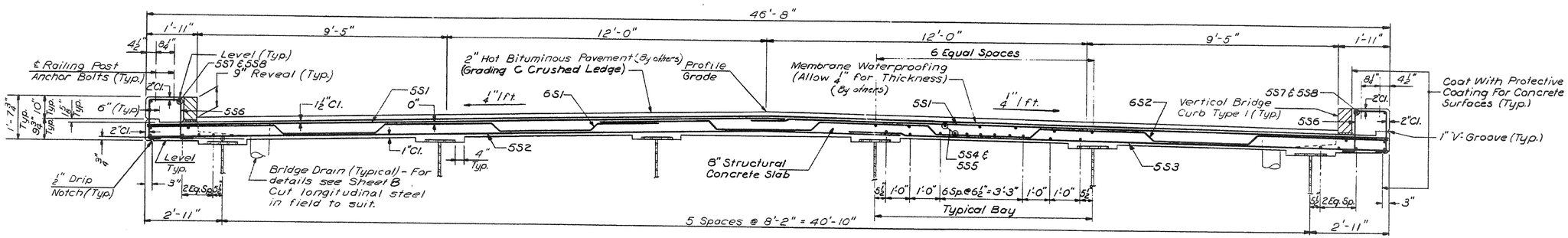

TRANSVERSE SECTION
½" = 1'-0"

HOWARD, NEEDLES, TAMMEN & BERGENDOFF
CONSULTING ENGINEERS
BOSTON

DESIGN— E.F.K. DETAIL - T.M.S.
TRACE—
CHECK— G.L.J.

BRIDGE NO.
SURVEY—
PLOT—

STATE HIGHWAY COMMISSION
BRIDGE DIVISION

GORHAM ROAD
OVER
I-295 S.B.
IN THE TOWN OF
SCARBOROUGH
CUMBERLAND COUNTY
SUPERSTRUCTURE DETAILS

SHEET 9 OF 12 AUGUSTA, MAINE AUGUST 1971

SCARBOROUGH I-295-3(56) 150-72

GORHAM ROAD UNDERPASS (MM 44.0)

B. P. R. REG. NO.	STATE	PROJECT NUMBER	SHEET NO.	TOTAL SHEETS
1	MAINE	I-295-3(66)	14	77

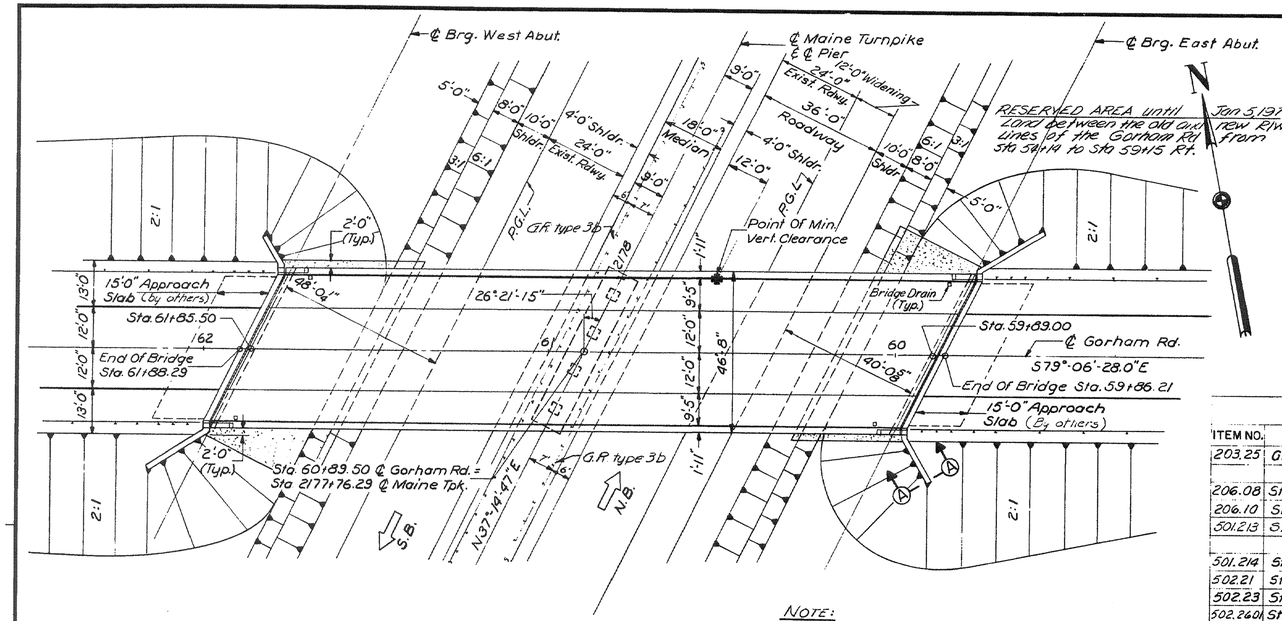

PLAN
1" = 20'

NOTE:
Payment for excavating required for construction under this contract will be incidental to the various contract items.

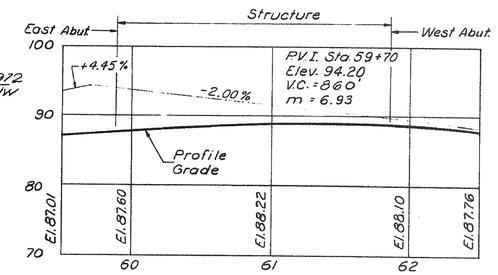

PROFILE - GORHAM RD.
Hor. 1" = 50'
Vert. 1" = 10'

BRIDGE QUANTITIES

ITEM NO.	DESCRIPTION	QUANTITY	UNIT
203.25	Granular Borrow	725	C.Y.
206.08	Structural Earth Excavation - Abut. & Retaining Walls	460	C.Y.
206.10	Structural Earth Excavation - Piers	185	C.Y.
501.213	Steel H-Beam Piles 57 lbs./Ft.	4360	L.F.
501.214	Steel H-beam Piles 53 lbs./ft.	900	L.F.
502.21	Structural Concrete, Abuts. & Retaining Walls	510	C.Y.
502.23	Structural Concrete, Piers	100	C.Y.
502.2601	Structural Concrete, Roadway & Sidewalk Slabs on Steel Bridges	1	L.S.
503.12	Reinforcing Steel, Fabricated & Delivered	119,200	Lbs.
503.13	Reinforcing Steel, Placing	119,200	Lbs.
504.7001	Structural Steel, Fabricated & Delivered	1	L.S.
504.7101	Structural Steel, Erection	1	L.S.
505.0801	Shear Connectors	1	L.S.
506.1401	Field Painting, Structural Steel	1	L.S.
507.08	Bridge Railing	382	L.F.
512.06	French Drains	35	C.Y.
515.20	Protective Coating For Concrete Surfaces	120	S.Y.
609.13	Vertical Bridge Curb - Type 1	392	L.F.

NOTE:
Estimated Quantity of Structural Steel, Fab., Del., Erected & Painted 250,000 Lbs.
Estimated Quantity of Shear Connectors ——— 2,028 Ea. (1,990 Lbs.)
Estimated Quantity of Concrete Item 502.2601 — 270 C.Y.

SPECIFICATIONS

DESIGN
A.A.S.H.O. Standard Specifications for Highway Bridges 1969 with interim specifications.

CONTRACT
State of Maine, State Highway Commission Standard Specifications, Highways and Bridges, Revision of June 1968.

LIVE LOADING

HS 20-44

FOUNDATIONS

Abutments - 10 BP57 Steel Bearing Piles - total capacity 75.5 T design capacity 52.5 tons - allowance of 23 tons for Negative Skin Friction.

Pier - 12 BP53 Steel Bearing Piles - design capacity 70 Tons

ALLOWABLE STRESSES

Concrete (n = 10) ~ fc = 1200 p.s.i.
Reinforcing Steel, A.S.T.M. Designation A 615 Grade 60, fs = 24,000 p.s.i.
Structural Steel, A.S.T.M. Designation A572-50 for main beam material, fs = 27,000 p.s.i. up to 1½" inclusive except as noted on Sheet 9, all other structural steel A.S.T.M. Designation A36, fs = 20,000 p.s.i.

CONCRETE CLASSIFICATION

All concrete shall be Class "A"

INDEX OF SHEETS

1. GENERAL PLAN
2. FOUNDATION SURVEY
3. BORING DETAILS
4. FOOTING PLAN
5. WEST ABUTMENT
6. EAST ABUTMENT
7. ABUTMENT AND WINGWALL DETAILS
8. PIER
9. STRUCTURAL STEEL AND BLOCKING POINTS
10. STRUCTURAL STEEL DETAILS
11. SUPERSTRUCTURE DETAILS
12. DECK JOINT DETAILS AND MISCELLANEOUS CONCRETE DETAILS
13. SLOPE PROTECTION
14. REINFORCING STEEL SCHEDULE
15. REINFORCING STEEL SCHEDULE

STANDARD SHEETS

BD 101-70 BEARING PEDESTALS JAN. 1970

BD 104-66 DIAPHRAGM, ARMORED JOINTS, SHEAR CONNECTORS, DRAIN. SEPT. 1966

BD 106-69 ALUMINUM RAILING JAN. 1969 (REV. 3-25-70)

GUARD RAIL AUGUST 1969 (6)

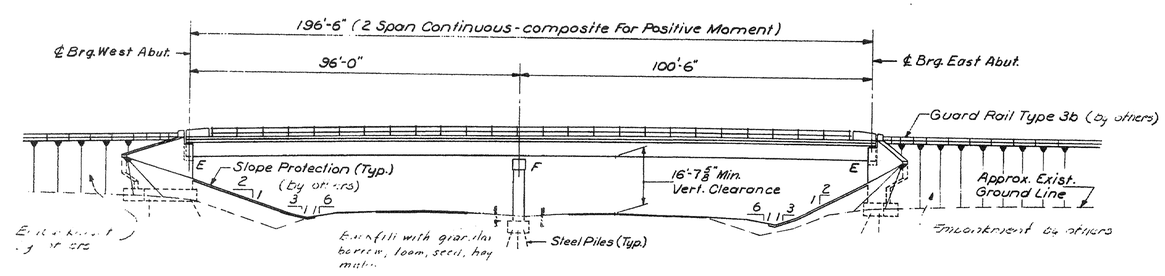

ELEVATION
1" = 20'

Sta 2176+50 to Sta 2179+0, 7' Lt. of ℄ Med Me Turnpike
Install G.R. type 3b, last 50' on 20:1 taper
Install twisted end section Sta. 2179+0 to Sta 2179+25, on taper
Install terminal end section Sta 2176+50
Install G.R. Delineator Posts Sta. 2176+50 and Sta 2179+25

GUARD RAIL
TYPE 3b - Single Rail

Sta. 2176+0 to Sta 2178+50, 7' Rt. of ℄ Med. Me. Turnpike
Install G.R. type 3b, First 50' on 20:1 taper
Install twisted end section Sta 2175+75 to Sta 2176+0, on taper
Install terminal end section sta 2178+50
Install G.R. Delineator Post Sta. 2176+25 and Sta. 2178+50

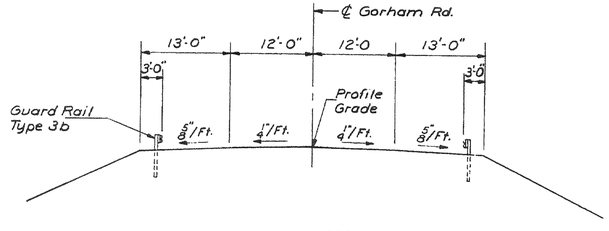

APPROACH SECTION
1" = 10'

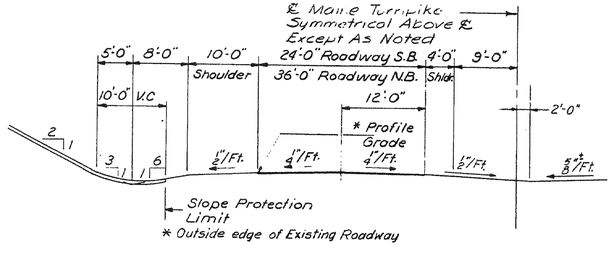

HALF SECTION MAINE TURNPIKE
1" = 10'

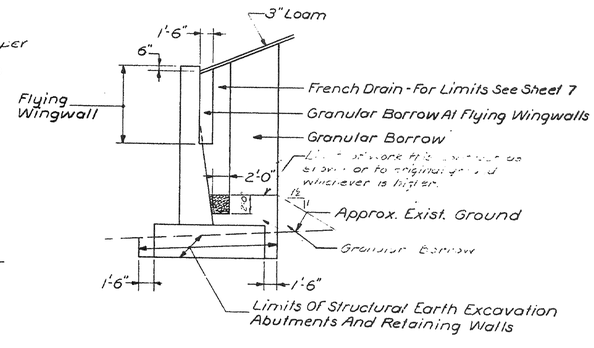

SECTION A-A
No Scale

NOTE:
For payment limits at abutments see Sheet 13.

HOWARD, NEEDLES, TAMMEN & BERGENDOFF
CONSULTING ENGINEERS
BOSTON

DESIGN— TRACE— CHECK—
BRIDGE NO. SURVEY— PLOT—

STATE HIGHWAY COMMISSION
BRIDGE DIVISION
GORHAM ROAD
OVER
MAINE TURNPIKE
IN THE TOWN OF
SCARBOROUGH
CUMBERLAND COUNTY
GENERAL PLAN
SHEET 1 OF 15 AUGUSTA, MAINE SEPTEMBER, 1971

SCARBOROUGH I 295 (56) 150-49

HAUSMAN 44-302

B. P. R. REG. NO.	STATE	PROJECT NUMBER	SHEET NO.	TOTAL SHEETS
1	MAINE	I-295-3(56)	29	77

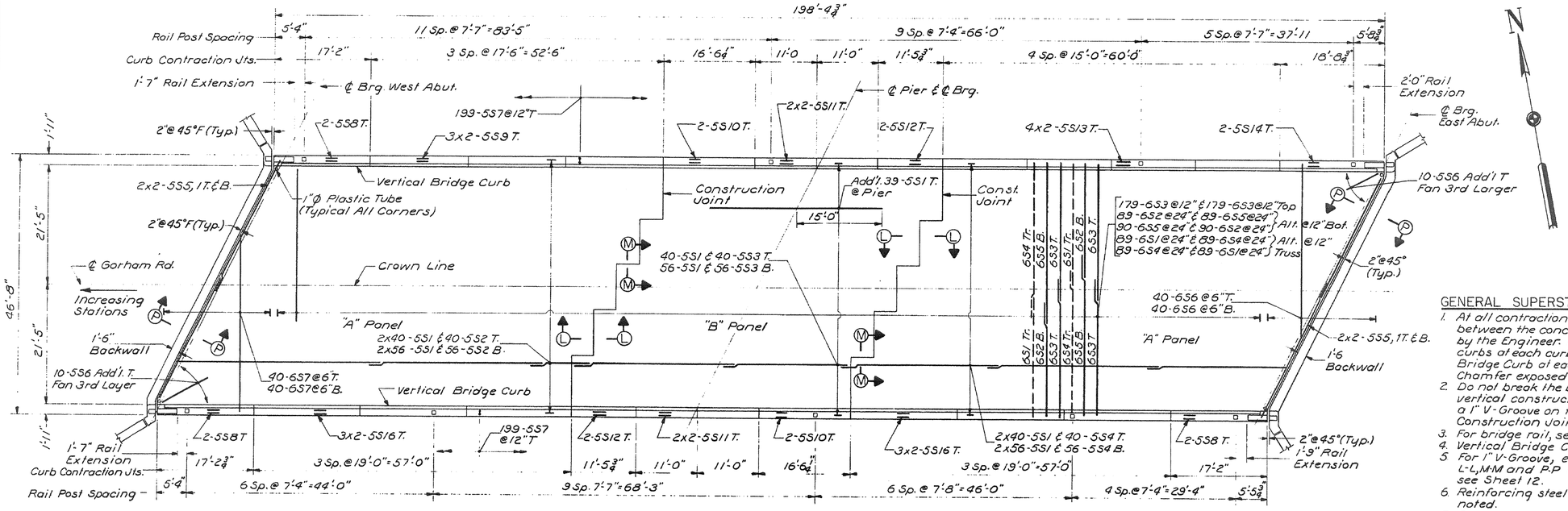

PLAN
1" = 10'

GENERAL SUPERSTRUCTURE NOTES

1. At all contraction joints in concrete curbs, break the bond between the concrete surfaces by a method to be approved by the Engineer. Form a 1" V-Groove on the outside faces of curbs at each curb joint. Provide a joint in the Vertical Bridge Curb at each contraction joint in the concrete curbs. Chamfer exposed edges of concrete ¾" unless noted.
2. Do not break the bond between the concrete surfaces of vertical construction joints in superstructure slabs. Form a 1" V-Groove on the outside faces of slabs at each Construction Joint.
3. For bridge rail, see Standard Detail Sheet BD106-69.
4. Vertical Bridge Curb will be paid for under Item 609.13.
5. For 1" V-Groove, end post detail on superstructure, Sections L-L, M-M and P-P and deck joint details at abutments see Sheet 12.
6. Reinforcing steel to have 2" minimum cover unless otherwise noted.
7. Place concrete in "A" Panels before placing concrete in "B" Panels. See Note A Sheet 12.

BRIDGE DRAIN NOTES

1. One bridge drain each side at both abutments (4 required)
2. Drains shall be placed so that they are at least 5'-0" clear of abutment, exact position to be determined in the field. For approximate location see Sheet 1.

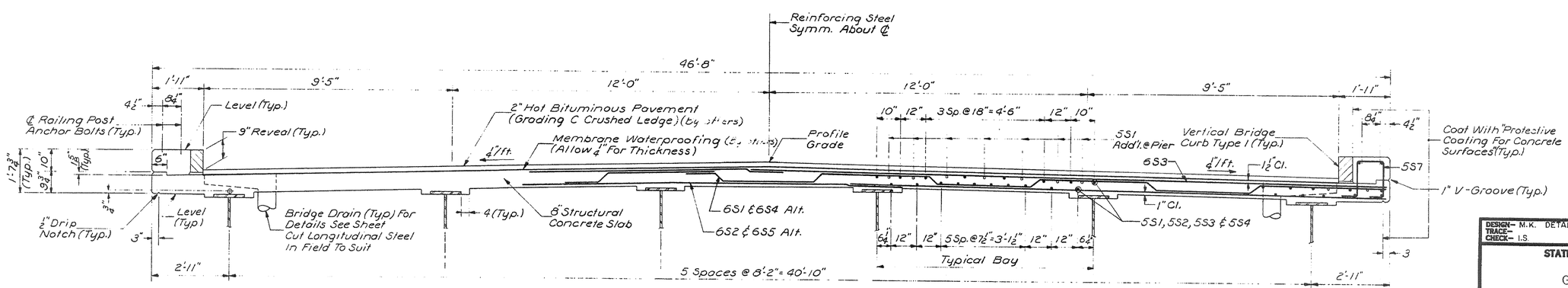

TRANSVERSE SECTION
½" = 1'-0"

HOWARD, NEEDLES, TAMMEN & BERGENDOFF
CONSULTING ENGINEERS
BOSTON

DESIGN – M.K. DETAIL – R.D.F.
TRACE –
CHECK – I.S.
BRIDGE NO.
SURVEY –
PLOT –

STATE HIGHWAY COMMISSION
BRIDGE DIVISION

GORHAM ROAD
OVER
MAINE TURNPIKE

IN THE TOWN OF
SCARBOROUGH
CUMBERLAND COUNTY

SUPERSTRUCTURE DETAILS

SHEET 11 OF 15 AUGUSTA, MAINE SEPTEMBER, 1971

I 295-3(56) 150-59

I-295 SOUTHBOUND UNDERPASS EXIT 44 (MM 44.3)

B. P. R. REG. NO.	STATE	PROJECT NUMBER	SHEET NO.	TOTAL SHEETS
1	MAINE	I-295-3(56)	47	77

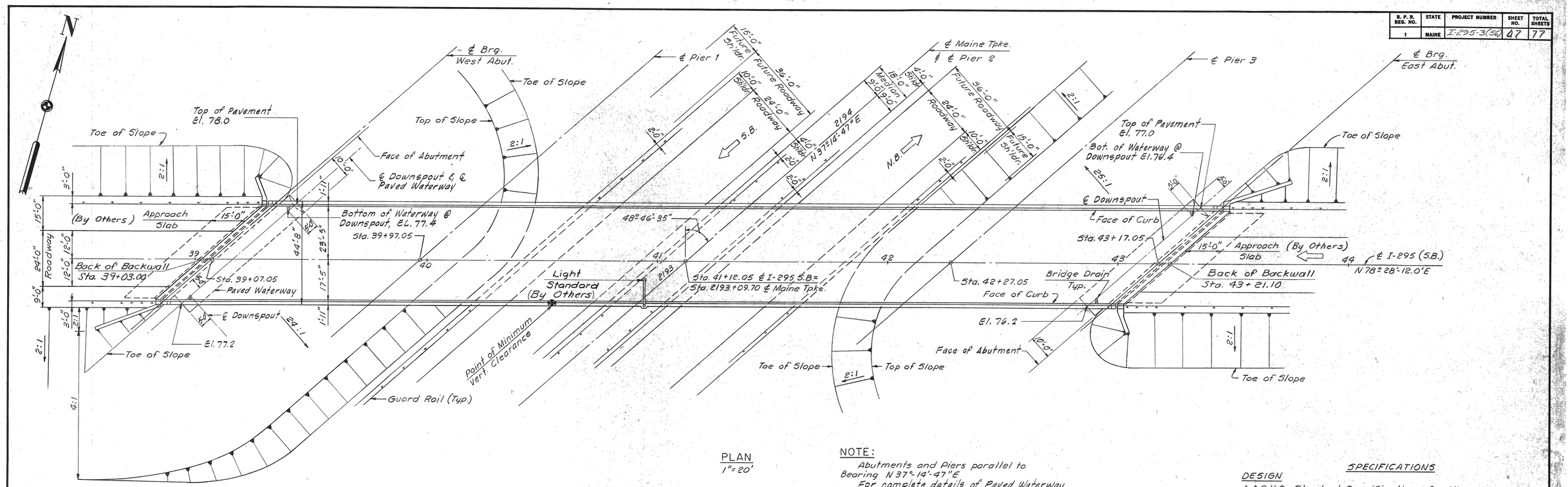

PLAN
1"=20'

NOTE:
Abutments and Piers parallel to Bearing N 37°-14'-47"E
For complete details of Paved Waterway see Highway Plans. (Typ. each Abutment.)

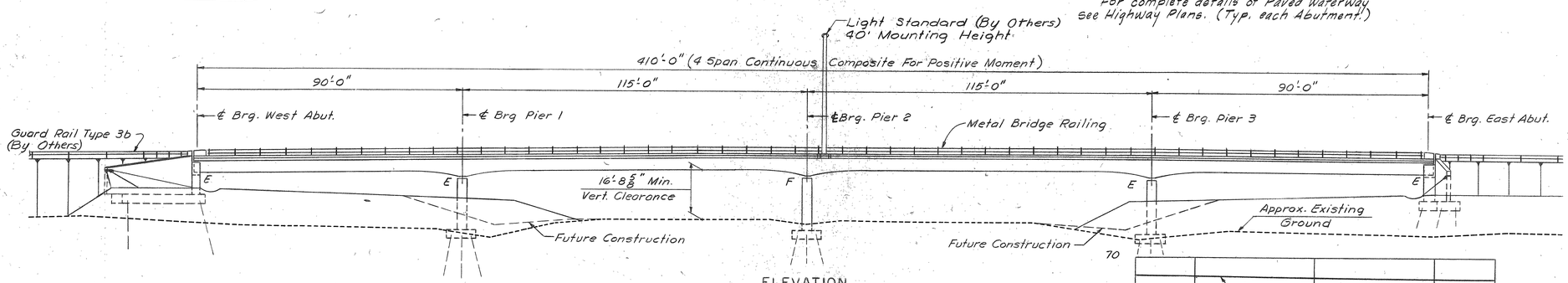

ELEVATION
1"=20'

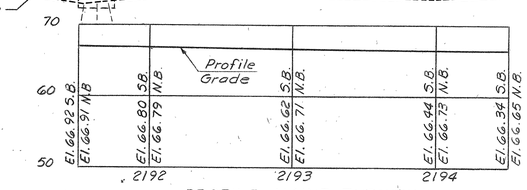

PROFILE - MAINE TURNPIKE
Hor. 1"=50' Vert. 1"=10'

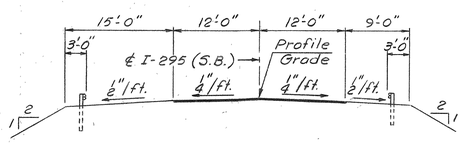

APPROACH SECTION I-295 (S.B.)
1"=10'

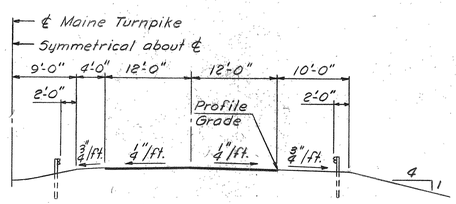

HALF SECTION-MAINE TURNPIKE
1"=10'

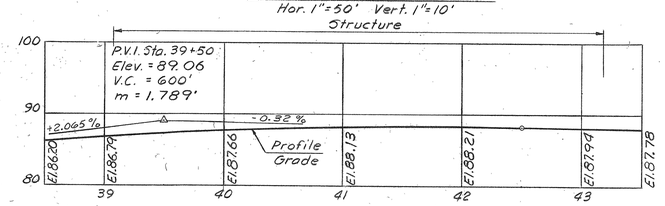

PROFILE - I-295 (S.B.)
Hor. 1"=60'
Vert. 1"=10'

NOTE:
Abutments and Piers parallel to Bearing N 37°-14'-47"E
For complete details of Paved Waterway see Highway Plans. (Typ. each Abutment.)

SPECIFICATIONS

DESIGN
A.A.S.H.O. Standard Specifications for Highway Bridges 1969 with interim specifications. Design includes provision for 1" future wearing surface.

CONTRACT
State of Maine, State Highway Commission Standard Specifications, Highways and Bridges, Revision of June 1968.

LIVE LOADING
HS 20-44 as modified for military loading

FOUNDATIONS
Abutments & Piers - Steel Bearing Piles, For additional data see Sheet 8

ALLOWABLE STRESSES
Concrete (n=10) ~ fc = 1200 p.s.i.
Reinforcing Steel, A.S.T.M. Designation A615 Grade 60, fs = 24,000 p.s.i.
Structural Steel, A.S.T.M. Designation A572-50 for main beam material, fs = 27,000 p.s.i. up to 1½" inclusive, all other structural steel A.S.T.M. Designation A36, fs = 20,000 p.s.i.

CONCRETE CLASSIFICATION
All concrete shall be Class "A"

DESIGN- E.F.K. DETAIL - J.M.M.
TRACE-
CHECK- I.S.
BRIDGE NO.
SURVEY-
PLOT-

STATE HIGHWAY COMMISSION
BRIDGE DIVISION

INTERSTATE 295 (S.B.)
OVER
MAINE TURNPIKE
IN THE TOWN OF
SCARBOROUGH
CUMBERLAND COUNTY
GENERAL PLAN

HOWARD, NEEDLES, TAMMEN & BERGENDOFF
CONSULTING ENGINEERS
BOSTON

SHEET 2 OF 21 AUGUSTA, MAINE NOV. 1971

SCARBOROUGH I-295-3(56)

B. P. R. REG. NO.	STATE	PROJECT NUMBER	SHEET NO.	TOTAL SHEETS
1	MAINE	I-295-3(56)	61	77

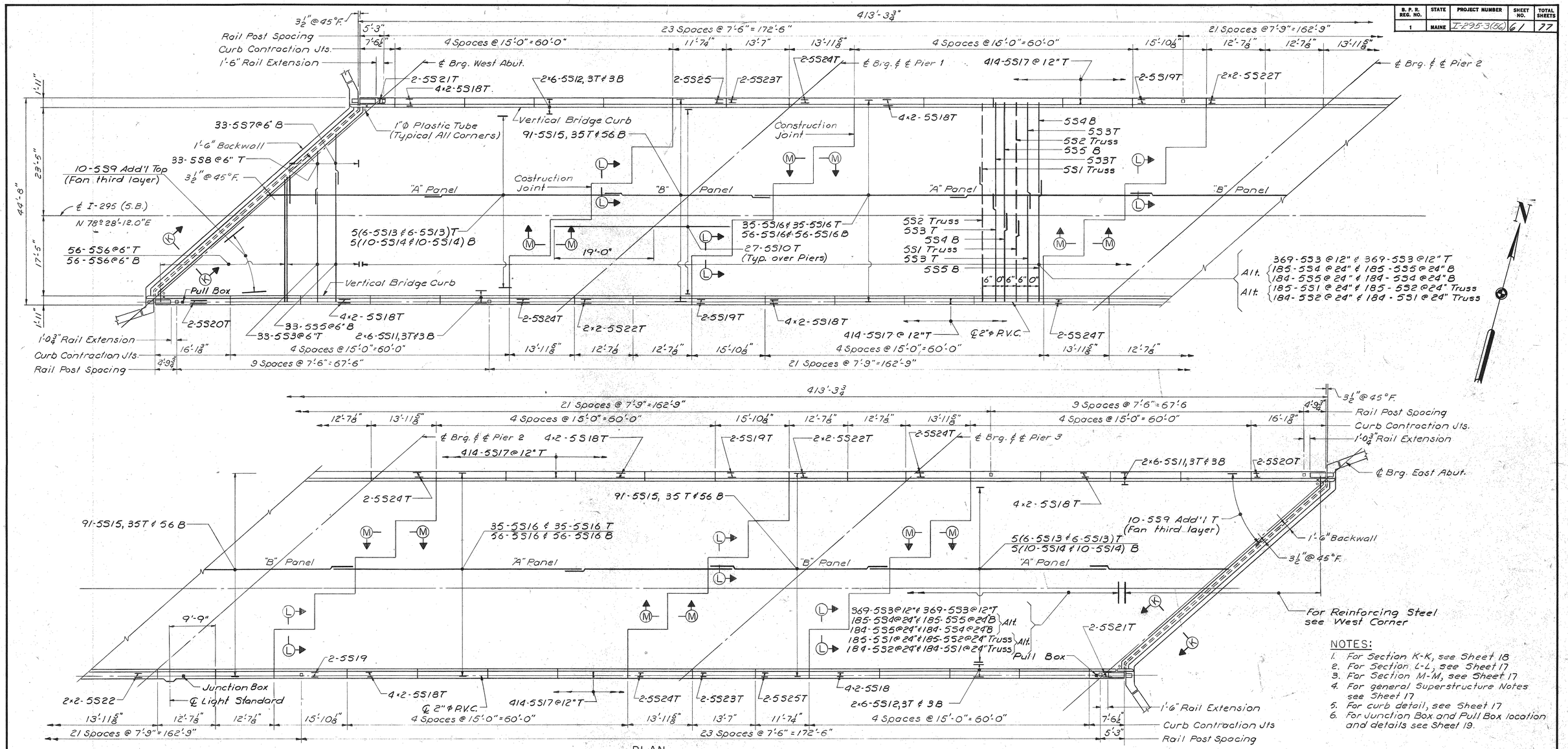

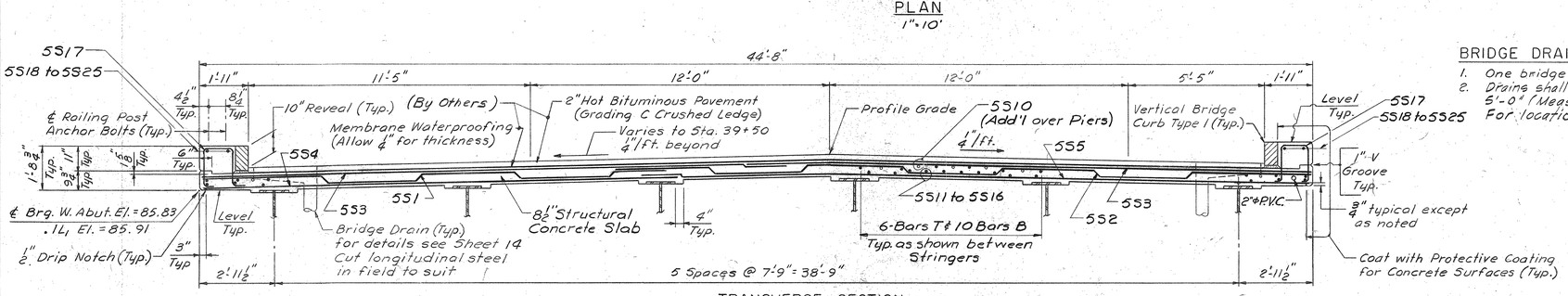

TRANSVERSE SECTION
3/8" = 1'-0"

PLAN
1" = 10'

NOTES:

1. For Section K-K, see Sheet 18
2. For Section L-L, see Sheet 17
3. For Section M-M, see Sheet 17
4. For general Superstructure Notes see Sheet 17
5. For curb detail, see Sheet 17
6. For Junction Box and Pull Box location and details see Sheet 19.

BRIDGE DRAIN NOTES:

1. One bridge drain each side at both abutments.
2. Drains shall be placed so that the downspouts are 5'-0" (Measured normal) from face of Abutments. For location see Sheet 2

DESIGN– E.F.K. DETAIL – J.M.M.
TRACE–
CHECK– I.S.

BRIDGE NO.
SURVEY–
PLOT–

STATE HIGHWAY COMMISSION
BRIDGE DIVISION

INTERSTATE 295 (S.B.)
OVER
MAINE TURNPIKE
IN THE TOWN OF
SCARBOROUGH
CUMBERLAND COUNTY

SUPERSTRUCTURE DETAILS

HOWARD, NEEDLES, TAMMEN & BERGENDOFF
CONSULTING ENGINEERS
BOSTON

SHEET 16 OF 21 AUGUSTA, MAINE NOV. 1971

SCARBOROUGH I-295-3(56)