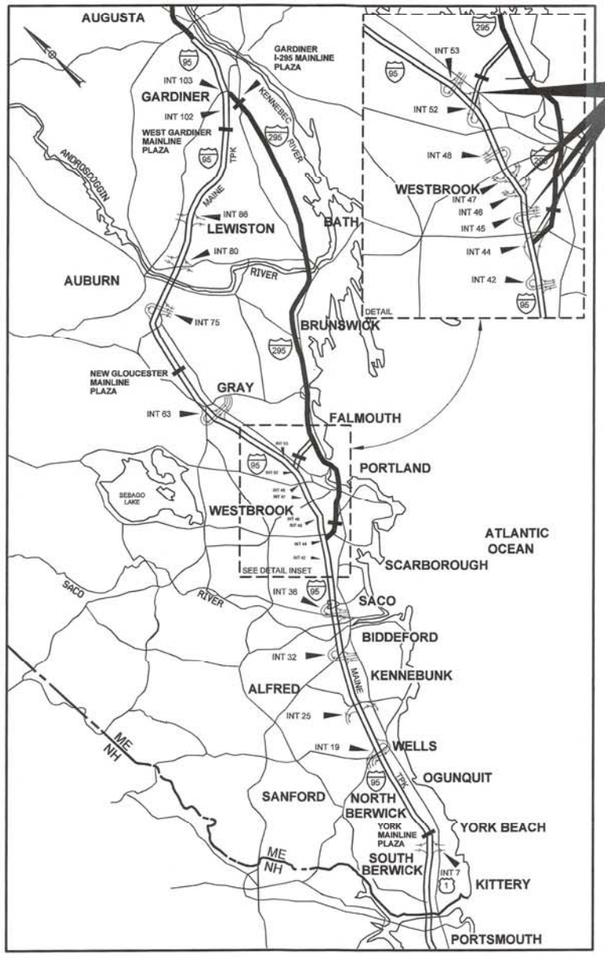

LOCATION MAP

EXIT 45 BRIDGE (MM 44.9)
EXIT 46 BRIDGE (MM 46.3)
EXIT 46 PAVING (MM 46.3)
MM 44.0 TO MM 49.01 AND FS 0.60

MAINE TURNPIKE

THE GOLD STAR MEMORIAL HIGHWAY

MAINE TURNPIKE AUTHORITY

DANIEL E. WATHEN, CHAIR
JAMES F. CLOUTIER, VICE CHAIR
GERARD P. CONLEY, SR., MEMBER
JOHN E. DORITY, MEMBER
ROBERT D. STONE, MEMBER
FREEMAN R. GOODRICH, MEMBER
KAREN DOYLE, MEMBER EX-OFFICIO

S. PETER MILLS, EXECUTIVE DIRECTOR

INDEX OF SHEETS

SHEET NO.	DESCRIPTION
1	TITLE SHEET
2	ESTIMATED QUANTITIES
3	GENERAL NOTES AND EARTHWORK SUMMARY
4	DRAINAGE SUMMARY AND DETAILS
5-8	EXIT 46 - TYPICAL SECTIONS
9-10	EXIT 46 - GUARDRAIL DETAILS
11	EXIT 46 - LIGHTING DETAILS
12	EXIT 46 - EROSION CONTROL DETAILS
13	EXIT 46 - SIGN DETAILS
14-29	MAINTENANCE OF TRAFFIC
30-31	GEOMETRIC PLANS
32-36	EXIT 46 PAVING PLANS
37	EXIT 46 SB OFF RAMP WIDENING PLAN
38-42	EXIT 46 SB OFF RAMP CROSS SECTIONS
43	EXIT 46 NB ON RAMP WIDENING PLAN
44-52	EXIT 46 NB ON RAMP CROSS SECTIONS
53	EXIT 46 LIMIT OF DISTURBANCE PLAN
54	EXIT 44 - SIGNS AND LINEWORK
55	EXIT 46 - STRIPING PLAN
56-63	EXIT 45 - BRIDGE PLANS
64-66	EXIT 46 - BRIDGE PLANS
67-69	SNOW FENCE PLANS
70-71	CONGRESS STREET - BRIDGE MOUNTED SIGN
72-73	RAILROAD BRIDGE CONDUIT
74-93	AS-BUILTS

CONTRACT 2015.03
BRIDGE REPAIRS
EXIT 45 BRIDGE (MM 44.9)
EXIT 46 BRIDGE (MM 46.3)

PAVING REHABILITATION
EXIT 46 (MM 46.3)

MISCELLANEOUS TURNPIKE REPAIRS
MM 44.0 TO MM 49.01 AND FS 0.60

HNTB

STATE OF MAINE
ROLAND A. LAVALLEE
No. 6452
LICENSED
PROFESSIONAL ENGINEER

Roland A. Lavallee 1/15/15
ROLAND A. LAVALLEE, P.E., PLS
VICE PRESIDENT
DIRECTOR OF OPERATIONS
DATE

APPROVED:
MAINE TURNPIKE AUTHORITY

Peter S. Merfeld 01-20-15
PETER S. MERFELD, P.E. - CHIEF OPERATIONS OFFICER
DATE

Stephen R. Tartre 1/20/15
STEPHEN R. TARTRE, P.E., - DIRECTOR OF ENGINEERING & BUILDING MAINTENANCE
DATE

CONTRACT 2015.03

Date:02/15/05

Filename: 001_MTATitle.dgn

ITEM NO.	DESCRIPTION	REFERENCE QUANTITY	UNIT	Exit 45 Bridge	Exit 46 Bridge	Exit 46 Sign	Exit 46 Paving	Exit 44 Striping	Snow Fence	RR Conduit	TOTALS
202.121	Removing Existing Concrete - Median Barrier	44 CY	LS	1							1
202.14	Removing Existing Railing - Property of Contractor		LF	640							640
202.202	Removing Pavement Surface		SY	500	2300		13200				16000
202.2021	Removing Pavement Surface - Bridge Deck		SY	1600							1600
202.2022	Removing Pavement Surface - Full Depth		SY				4250				4250
202.2026	Removing Pavement Surface - Drainage Paths		SF				1150				1150
203.20	Common Excavation		CY				540				540
203.241	Common Borrow, Truck Measure		CY				1300				1300
203.25	Granular Borrow		CY				85				85
206.082	Structural Earth Excavation - Major Structures		CY	2	5						7
304.09	Aggregate Base Course - Crushed		CY				345				345
304.10	Aggregate Subbase Course - Gravel		CY				860				860
403.207	Hot Mix Asphalt, 19 mm Nominal Maximum Size		Ton				1010				1010
403.2081	Hot Mix Asphalt, 12.5 mm Nominal Maximum Size - Bridge Deck		Ton	150	190						340
403.2083	Hot Mix Asphalt, 12.5 mm (Polymer Modified) - RAP		Ton				2100				2100
403.211	Hot Mix Asphalt (Shimming)		Ton	85	75						160
403.213	Hot Mix Asphalt, 12.5 mm Nominal Maximum Size, Base		Ton				2200				2200
409.15	Bituminous Tack Coat - Applied		GAL				1560				1560
409.151	Bituminous Tack Coat - Applied, Bridge		GAL	110	115						225
419.30	Sawing Bituminous Pavement		LF	670	160						830
470.08	Berm Dropoff Correction - Grindings		Ton				110				110
502.81	Installation of Plastic Deck Drains		EA	12							12
503.171	Corroded Reinforcing Steel - Repair Detail 1		EA	10							10
507.095	Aluminum Bridge Railing - Splice Modification		EA						88		88
507.11	Light-Weight Barrier - Fabricated and Delivered		LF	1090							1090
507.12	Light-Weight Barrier - Placed (Temporary)		LF	1690							1690
507.13	Light-Weight Barrier - Placed (Permanent)		LF	1010							1010
508.13	Waterproofing Membrane	1650 SY	LS	1							1
514.06	Curing Box for Concrete Cylinders		EA	1	1						2
515.201	Pigmented Protective Coating for Concrete Surfaces		SY	700							700
515.202	Clear Protective Coating for Concrete Surfaces		SY		1500		450				1950
515.203	Re-caulking Existing Concrete Barrier Construction / Control Joints		LF		470		395				865
518.10	Abutment Repairs		SF	75							75
518.40	Epoxy Injection Crack Repair - Parapets		LF		180						180
518.60	Repair of Vertical Surfaces - Approach Slab Modification		LF		78						78
518.80	Partial Depth Concrete Repairs		SF	1100							1100
518.81	Full Depth Concrete Repairs		SF	150							150
518.86	Bridge Joint Header Concrete Repairs		SF	83							83
520.211	Install New Gland Seal - Exit 45		LF	100							100
520.23	Asphaltic Plug Joint		LF		80						80
520.24	Bridge Joint Modification - Exit 45 at Median		LF	6							6
526.306	Temporary Concrete Barrier, Type I - Supplied by Authority	730 LF	LS	1							1
527.342	Work Zone Crash Cushions - TL-2		UNIT	1			1				2
603.205	30" RCP - Class III		LF				32				32
604.187	Rebuild Catch Basin to Grade - Type B1		EA				4				4
604.40	Secure Catch Basin Grate		EA				4				4
606.1723	Thrie Beam Bridge Attachment at Railing - Type III		EA	4							4
606.1724	Thrie Beam Bridge Attachment at Median - Type III		EA	2							2
606.178	Guardrail Beam		LF				225				225
606.2652	Terminal End - Remove and Stack		EA				8				8
606.278	Terminal End - Anchored End		EA				6				6
606.352	Reflectorized Beam Guardrail Delineator		EA				55				55
606.353	Delineator Post		EA				150				150
606.354	Delineator Post - Remove and Reset		EA				15				15
606.355	Delineator Post - Remove and Stack		EA				28				28
606.3605	Guardrail - Remove, Modify, and Reset Single Rail		LF	210			638				848
606.3606	Guardrail - Remove, Modify, and Reset Double Rail		LF	390							390
606.3621	Guardrail Adjust - Single Rail		LF		300		1900				2200
606.3631	Guardrail - Remove and Dispose		LF	165			188				353
606.471	Single Offset Block - W Beam		EA				18				18
606.48	Single Galvanized Steel Post		EA				18				18
606.701	Asymmetrical Thrie Beam Transition		EA				2				2
606.81	Guardrail 350 FLEAT Terminal - Remove and Reset		EA				1				1
606.93	Guardrail 350 FLEAT Terminal - Remove and Stack		EA				2				2

ITEM NO.	DESCRIPTION	REFERENCE QUANTITY	UNIT	Exit 45 Bridge	Exit 46 Bridge	Exit 46 Sign	Exit 46 Paving	Exit 44 Striping	Snow Fence	RR Conduit	TOTALS
607.4311	Snow Fence - Running Hill Road Bridge (3-Bar)		LF						192		192
607.4312	Snow Fence - Warren Avenue Bridges (2-Bar)		LF						224		224
607.4313	Snow Fence - Auburn Street Bridge (2-Bar)		LF						224		224
610.08	Plain Riprap		CY				16				16
613.319	Erosion Control Blanket		SY				150				150
615.07	Loam		CY				245				245
618.14	Seeding Method Number 2		Unit				20				20
619.1201	Mulch, Plan Quantity		Unit				20				20
619.1202	Temporary Mulch		LS				1				1
620.58	Non-woven Geotextile		SY				65				65
626.11	Precast Concrete Junction Box		EA				5				5
626.12	Quazite Junction Box		EA				4				4
626.13	Remove and Relocate Quazite Junction Box		EA				4				4
626.14	Remove and Relocate Precast Concrete Junction Box		EA				12				12
626.112	Aluminum Junction Box		EA							4	4
626.212	Metallic Conduit - 2 Inch Rigid Galvanized		LF							840	840
626.22	Non-Metallic Conduit		LF				3000				3000
626.32	24" Foundation		EA			4	8				12
627.181	12 Inch Solid White Pavement Marking Line		LF					520			520
627.4074	Preformed Pavement Marking Tape Symbols, Hot Inlay Installation		SF				430				430
627.712	4 Inch White or Yellow Painted Pavement Marking Line		LF		2100						2100
627.7121	6 Inch White or Yellow Painted Pavement Marking Line		LF	3250			13800				17050
627.72	Temporary 4 Inch Pavement Marking Tape, White or Yellow		LF		2000						2000
627.73	Temporary 6 Inch Pavement Marking Tape, White or Yellow		LF	6700							6700
627.731	Temporary 6 Inch Black Pavement Marking Tape		LF	1840	760						2600
627.68	Temporary 4 Inch Painted Pavement Marking Line, White or Yellow		LF		5100						5100
627.681	Temporary 6 Inch Painted Pavement Marking Line, White or Yellow		LF	1300			13800				15100
627.77	Removing Existing Pavement Markings		SF	640	920						1560
627.812	Temporary Raised Pavement Markers		EA	140	70		300				510
627.94	Pavement Marking Line - Recessed Tape, Broken White Line, 6-inch		LF					410			410
627.943	Pavement Marking Line - Recessed Tape, Solid W or Y Line, 6-inch		LF					1000			1000
627.944	Pavement Markings - Recessed Tape - Words, Arrows, Stop Bars		SF					140			140
629.05	Hand Labor, Straight Time		HR	20	20		20				60
631.10	Air Compressor (including operator)		HR	10	10		10				30
631.11	Air Tool (including operator)		HR	10	10		10				30
631.12	All Purpose Excavator (including operator)		HR	10	10		10				30
631.172	Truck - large (including operator)		HR	10	10		20				40
631.36	Foreman		HR	10	10	5	10	5	5	5	50
631.40	Welding Machine (including operators)		HR	10	10						20
634.175	Replacement LED Fixture		EA				39				39
634.208	Remove and Reset Light Standard		EA				8				8
634.2154	#4 AWG THHN Wire		LF				4800				4800
634.2156	#6 AWG THHN Wire		LF				2400				2400
643.713	Preemptive Traffic Loops		EA				2				2
645.109	Remove and Reset Sign		EA				3				3
645.12	Bridge Sign (Skyway Drive Bridge)		LS		1						1
645.13	Bridge Overpass-Mounted Guide Sign Support (Congress Street Bridge)		LS			1					1
645.162	Breakaway Device Multi Pole		EA			4					4
645.289	Steel H-Beam Poles		LB			1350					1350
645.401	Intallation of Type II Sign		EA				1	3			4
645.410	Installation of Type I Guide Sign		EA			2					2
652.30	Flashing Arrow Board		EA	2			1				3
652.312	Type III Barricades		EA	6	12						18
652.33	Drum		EA	70	30		130				230
652.35	Construction Signs		SF	240	240		3500	300			4280
652.361	Maintenance of Traffic Control Devices		LS	0.25	0.25	0.1	0.4	0	0	0	1
652.38	Flaggers		HR		360						360
652.39	Portable - Light Tower		EA		3						3
652.41	Portable - Changeable Message Sign		EA	1.5	1.5	0.25	2	0.25	0.25	0.25	6
652.45	Truck Mounted Attenuator		CD			4	38	2	14	2	60
656.50	Baled Hay, in place		EA	10	10		20				40
656.60	Temporary Berms		LF				350				350
656.62	Temporary Slope Drains		LF				40				40
656.632	30 inch Temporary Silt Fence		LF	200	200	50	2050	50			2550
659.10	Mobilization		LS	0.32	0.18	0.02	0.43	0.01	0.02	0.02	1

Date:1/23/2015

Filename: 002_Quantities.dgn

Scale:

No.	Revision	By	Date

Designed by:

HNTB

CONSULTANT PROJECT MANAGER: Craig R. Morin, P.E.

	By	Date		By	Date
Designed	CAH	01/15	Checked	CRM	01/15
Drawn	MPC	01/15	In Charge of	RAL	01/15

HNTB CORPORATION
340 County Road, Suite 6-C
Westbrook, ME 04092
TEL (207) 774-5155
FAX (207) 228-0909

MAINE TURNPIKE

THE GOLD STAR MEMORIAL HIGHWAY

MTA PROJECT MANAGER: Ralph C. Norwood, IV, P.E., P.T.O.E.

BRIDGE REPAIRS
PAVEMENT REHABILITATION

ESTIMATED QUANTITIES

SHEET NUMBER: QT-01

CONTRACT:2015.03

GENERAL

1. ALL DETAILS SHALL BE IN CONFORMANCE WITH MAINE DEPARTMENT OF TRANSPORTATION (MAINE DOT) STANDARD DETAILS HIGHWAYS AND BRIDGES DECEMBER 2002 WITH UPDATES, AND MAINE DOT BEST MANAGEMENT PRACTICES FOR EROSION AND SEDIMENT CONTROL LATEST REVISION UNLESS OTHERWISE INCLUDED IN THESE PLANS OR PROJECT SPECIFICATIONS.

2. ALL EXISTING DELINEATOR AND MILE MARKER POSTS SHALL BE REMOVED AND RESET UPON COMPLETION OF THE CONTRACT. PAYMENT FOR RESETTING DELINEATOR POSTS WILL BE MADE UNDER ITEM 606.354. DELINEATOR POSTS SUPPLIED BY THE CONTRACTOR SHALL BE PAID FOR UNDER ITEM 606.353.

3. THE CONTRACTOR SHALL SUBMIT HIS PROPOSED STAGING AREA(S) AND FIELD TRAILER LOCATION TO THE RESIDENT FOR APPROVAL PRIOR TO STARTING WORK.

4. STATE OF MAINE DEPARTMENT OF ENVIRONMENTAL PROTECTION PERMITS FOR THE EXIT 46 SHOULDER WIDENING ARE INCLUDED AS PART OF THIS CONTRACT (SEE SPECIFICATIONS). THE CONTRACTOR SHALL COMPLY WITH ALL CONDITIONS OF THESE PERMITS.

5. CONTRACTOR SHALL SURVEY AND TIE THE EXISTING PAVEMENT MARKING LINES ON THE RAMPS AND IN THE PLAZA AREAS AT EXITS 45 AND 46 PRIOR TO REMOVING, MILLING OR PAVING OVER THE EXISTING PAVEMENT MARKING LINES AT THE EXITS, AND SHALL USE THE SURVEYED INFORMATION TO RE-ESTABLISH THE PAVEMENT MARKING LINES AFTER COMPLETING THE PAVING. THIS WORK SHALL BE INCIDENTAL TO THE 627 ITEM(S).

6. ANY DAMAGE TO FINAL PAVEMENT, SLOPES, OR STRUCTURES CAUSED BY THE CONTRACTOR'S EQUIPMENT, PERSONNEL OR OPERATIONS SHALL BE REPAIRED TO THE SATISFACTION OF THE RESIDENT. ALL WORK, EQUIPMENT, AND MATERIALS REQUIRED TO MAKE REPAIRS SHALL BE AT THE CONTRACTOR'S EXPENSE.

7. FINAL PAVEMENT MARKING LINES ON THE MAINE TURNPIKE RAMPS SHALL BE INSTALLED BY THE CONTRACTOR.

8. RIGHT OF WAY AND PROPERTY LINES ARE SHOWN FOR INFORMATIONAL PURPOSES ONLY. ADDITIONAL INFORMATION IS AVAILABLE FROM THE MAINE TURNPIKE AUTHORITY UPON REQUEST.

9. EXISTING TOPOGRAPHY SHOWN ON THE PLANS WAS GENERATED FROM AERIAL PHOTOGRAPHY AND FIELD SURVEY. QUANTITIES HAVE BEEN GENERATED USING THE FIELD SURVEY TOPOGRAPHY.

EARTHWORK

1. SCRUB GROWTH AND BRUSH WITHIN THE SLOPE LIMIT LINES SHALL BE REMOVED AND DISPOSED. THIS WORK SHALL BE INCIDENTAL TO THE CONTRACT.

2. WASTE MATERIALS SHALL BE DISPOSED OF OFF THE PROJECT SITE, IN ACCORDANCE WITH ALL ENVIRONMENTAL REGULATIONS.

3. EXISTING INSLOPES STEEPER THAN 2:1 IN PROPOSED FILL AREAS SHALL BE BENCHED AS SHOWN IN THE DETAILS OR AS DIRECTED BY THE RESIDENT.

4. THE NORMAL GRUBBING WIDTH IN THE FILLS SHALL BE VARIABLE LEFT OR RIGHT, WHEN SUBGRADE IS LESS THAN 5' ABOVE OLD GROUND. THE GRUBBING DEPTH HAS BEEN ESTIMATED AS 6".

5. GRANULAR BORROW SHALL BE USED TO BACK FILL MUCK/PEAT EXCAVATION OR IN LOW WET AREAS AS DIRECTED BY THE RESIDENT TO 1' ABOVE WATER LEVEL OR OLD GROUND. GRANULAR BORROW SHALL MEET THE REQUIREMENTS OF GRANULAR BORROW - UNDERWATER BACK FILL AND WILL BE PAID FOR AS GRANULAR BORROW.

6. EXCAVATIONS ACCOMPLISHED AS PART OF THIS PROJECT SHALL BE CONSTRUCTED IN ACCORDANCE WITH OSHA SUBPART P OF 29 CFR PART 1926.650-652 (CONSTRUCTION STANDARDS FOR EXCAVATION).

PAVING

1. A COATING OF HOT RUBBERIZED ASPHALT (SS-S-140IC) SHALL BE APPLIED TO ALL TRANSVERSE BUTT JOINTS AND LONGITUDINAL JOINTS IN THE TOP LIFT OF PAVEMENT.

2. A BITUMINOUS TACK COAT IS REQUIRED BETWEEN ALL PAVEMENT LIFTS.

3. THE 1½" HMA 12.5mm (POLYMER MODIFIED) SURFACE COURSE SHALL BE INSTALLED FULL WIDTH AS SHOWN ON THE PLANS.

4. EXISTING RAMP CROSS SLOPES VARY. MATCH THE EXISTING RAMP SUPERELEVATIONS.

5. THE CONTRACTOR SHALL PROVIDE A PAVEMENT JOINT IN THE SURFACE LIFT OF PAVEMENT AT THE INTERFACE OF THE TRAVEL LANE(S) AND 8 FOOT RIGHT SHOULDER. THE CONTRACTOR SHALL BE AWARE OF NARROW PAVING AREAS WITHIN THE EXIT 46 PAVING LIMITS.

6. THE LOCATION OF ALL PAVEMENT JOINTS SHALL BE APPROVED BY THE RESIDENT. THE CONTRACTOR SHALL PROVIDE A NARROW PAVER WHEN REQUIRED.

7. ANY NECESSARY CLEANING OF EXISTING PAVEMENT PRIOR TO PAVING SHALL BE INCIDENTAL TO THE RELATED PAVING ITEMS.

DRAINAGE

1. NO EXISTING DRAINAGE SHALL BE ABANDONED, REMOVED OR PLUGGED WITHOUT PRIOR APPROVAL OF THE RESIDENT.

2. INLETS AND OUTLETS OF ALL CULVERTS SHALL BE RIPRAPPED UNLESS OTHERWISE NOTED ON THE PLANS OR DIRECTED BY THE RESIDENT.

3. ALL DITCH ELEVATIONS AND OFFSETS SHOWN ON THE CROSS SECTIONS ARE FOR THE FINISHED DITCH FLOW LINE.

4. THE FOLLOWING SHALL BE INCIDENTAL TO THE 603 ITEM(S): - ANY CUTTING OF EXISTING CULVERTS OR CONNECTORS NECESSARY TO INSTALL CULVERT REPLACEMENT OR EXTENSIONS. - ALL PIPE EXCAVATION INCLUDING CUTTING AND REMOVAL OF PAVEMENT. - ALL DITCHING AT PIPE ENDS. - FURNISHING, PLACING, GRADING, AND COMPACTING OF ANY NEW GRAVEL AND/OR FILL MATERIAL INCLUDING GRANULAR BORROW USED UNDER PIPES . GRANULAR BORROW PLACED UNDER PIPES SHALL MEET THE REQUIREMENTS FOR UNDERWATER BACKFILL.

5. ANY NECESSARY CUTTING OF PIPES TO FIT IN AREAS OF PROPOSED CATCH BASINS OR MANHOLES WILL NOT BE PAID FOR SEPARATELY AND WILL BE CONSIDERED INCIDENTAL TO THE 604 ITEM(S).

6. CONNECTING PROPOSED DRAINAGE PIPES TO EXISTING PIPES SHALL BE INCIDENTAL TO THE PROPOSED DRAINAGE PIPE ITEMS UNLESS A CONCRETE COLLAR IS REQUIRED. CONCRETE COLLARS SHALL BE PAID FOR UNDER ITEM 603.28.

GUARDRAIL

1. AT THE END OF THE WORK DAY, EVERYDAY, THE CONTRACTOR IS REQUIRED TO HAVE AN APPROVED CRASHWORTHY END TREATMENT ON ALL GUARDRAIL WITHIN ALL WORK AREAS THAT ARE ACCESSIBLE TO TRAFFIC.

2. THE CONTRACTOR SHALL INSTALL A WORK ZONE CRASH CUSHION (TL-2, 35 MPH) ON THE REMAINING SECTION OF GUARDRAIL NOT REMOVED FOR THE SB OFF RAMP SHOULDER WIDENING.

3. CONNECTIONS FOR PROPOSED GUARDRAIL TO EXISTING GUARDRAIL SHALL BE INCIDENTAL TO THE PROPOSED GUARDRAIL ITEMS.

4. CONTRACTOR SHALL STOCKPILE ALL GUARDRAIL TO BE REMOVED AND RESET. REMOVED, STACKED AND DISPOSED AND REMOVED, MODIFIED AND RESET UNTIL GUARDRAIL INSTALLATION HAS BEEN COMPLETE. STOCKPILING THE GUARDRAIL SHALL BE INCIDENTAL TO ITEM 606.3631 GUARDRAIL - REMOVE, STACK AND DISPOSE. ALL USABLE EXISTING GUARDRAIL SHALL BE MODIFIED AND RESET PRIOR TO BEING PAID TO INSTALL NEW GUARDRAIL.

5. FOR ALL NEW GUARDRAIL TYPE 3d W-BEAM SINGLE RAIL - OFFSET BLOCKS SHALL BE NON-WOOD CONFORMING TO NCHRP 350 TEST LEVEL 3.

6. ALL PROPOSED GUARDRAIL AND UTILITIES SHALL BE INSTALLED IN A MANNER TO AVOID DRAINAGE STRUCTURES AND UTILITIES.

7. ONE REFLECTORIZED FLEXIBLE GUARDRAIL MARKER (ITEM 606.353) SHALL BE INSTALLED AT EACH GUARDRAIL TERMINAL. TWO REFLECTORIZED FLEXIBLE GUARDRAIL MARKERS (ITEM 606.353) SHALL BE INSTALLED AT EACH END OF THE GUARDRAIL F.L.E.A.T. UNITS.

8. IN NON-GUARDRAIL AREAS, DELINEATORS SHALL BE SPACED AT 50' ON THE RAMPS. CONFIRM THE SPACING LAYOUT WITH THE ENGINEER. COORDINATE THE GUARDRAIL DELINEATOR POST INSTALLATION WITH THE SITE LIGHTING CONTRACTOR TO AVOID THE GUARDRAIL DELINEATOR POSTS CONFLICTING WITH THE CONDUIT INSTALLATION.

9. REUSABLE NCHRP 350 COMPLIANT GUARDRAIL COMPONENTS (W-BEAM, POSTS, OFFSET BLOCKS, ETC.) REMOVED FROM THE AUTHORITY'S PROPERTY SHALL BE USED IN RESETS PRIOR TO THE AUTHORITY PAYING FOR NEW COMPONENTS.

10. GUARDRAIL SECTIONS IDENTIFIED TO BE REMOVED, STACKED AND DISPOSED THAT ARE NOT REINSTALLED AND ARE IN GOOD CONDITION, AS DETERMINED BY THE RESIDENT, SHALL BE DELIVERED TO THE MTA CROSBY MAINTENANCE FACILITY. REMOVAL, DELIVERY, DISMANTLING AND STACKING SHALL BE INCIDENTAL TO THE GUARDRAIL ITEMS. REMAINING GUARDRAIL SHALL BECOME THE PROPERTY OF THE CONTRACTOR.

LIGHTING

1. ALL EXISTING EXIT 46 LUMINAIRES SHALL BE REPLACED WITH NEW 480V LED LUMINAIRES. THE EXISTING HPS LUMINAIRES SHALL BE REMOVED AND TRANSPORTED TO THE MTA SIGN SHOP (MILE 59 NORTHBOUND). THE EXIT 46 SITE LIGHTING SYSTEM (RAMPS, PLAZAS, SKYWAY DRIVE INTERSECTIONS AND PARK AND RIDE LOT LUMINAIRES) IS A IS A 480V - 3 WIRE SYSTEM CONTROLLED BY A PHOTOCELL IN EACH TOLLHOUSE. THE VOLTAGE IS TRANSFORMED UP TO 480V IN THE TOLL HOUSE FOR THE SITE LIGHTING SYSTEM. THE CONTRACTOR SHALL FIELD VERIFY THE VOLTAGE BEFORE SUBMITTING THE LUMINAIRE SHOP DRAWINGS, AND SHALL NOTE THE VOLTAGE ON ALL SHOP DRAWING SUBMITTALS.

2. FOR LIGHT FIXTURES BEING RELOCATED, THE EXISTING LIGHT STANDARD FOUNDATIONS SHALL BE REMOVED AND STACKED AFTER THE LIGHT POLES AND MAST ARMS HAVE BEEN RESET ON THE NEW FOUNDATIONS. PAYMENT SHALL BE INCIDENTAL TO THE COMMON EXCAVATION. SEE SPECIFICATIONS FOR ADDITIONAL INFORMATION.

3. CUT AND SPLICE EXISTING WIRING TO NEW WIRING WHERE INDICATED OR REQUIRED. ALL SPLICES SHALL BE MADE IN ACCESSIBLE JUNCTION BOXES. SEE NOTES AND DETAILS ON LIGHTING DETAILS SHEET, AND SPECIFICATIONS. PAYMENT SHALL BE INCIDENTAL TO PROPOSED WIRING ITEMS.

4. PROPOSED CONDUITS SHALL HAVE A MINIMUM 2' OFFSET DOWN SLOPE EXISTING CONDUIT, HOWEVER NOT LESS THAN 3 FEET OF THE EDGE OF PAVEMENT IN NON-GUARDRAIL AREAS OR NOT LESS THAN 5 FEET BEHIND THE FACE OF GUARDRAIL IN GUARDRAIL AREAS. THE APPROXIMATE LOCATION OF EXISTING AND PROPOSED CONDUITS ARE SHOWN ON THE PLANS. COORDINATE THE CONDUIT INSTALLATION WITH THE GUARDRAIL CONTRACTOR TO AVOID THE CONDUIT INSTALLATION CONFLICTING WITH THE GUARDRAIL DELINEATOR POST INSTALLATION.

5. ALL WIRE SHALL BE COPPER, NO ALUMINUM WIRE IS ALLOWED.

6. PROPOSED NON-METALLIC CONDUIT SHALL BE 2" SCHEDULE 40 PVC AND CONTAIN TWO #4 (PRIMARY) AND ONE # 6 (GROUND) WIRES. THE EXISTING SYSTEM IS WIRED WITH A PREWIRED CONDUIT.

7. ALL LIGHT STANDARD FOUNDATIONS AND CONDUIT TRENCHES SHALL BE INSTALLED IN A MANNER TO AVOID DRAINAGE STRUCTURES AND UTILITIES.

8. CONTRACTOR SHALL ONLY EXCAVATE AN AMOUNT OF UTILITY TRENCH THAT CAN BE BACKFILLED IN THE SAME DAY. UTILITY TRENCHES SHALL NOT BE LEFT OPEN OVER NIGHT.

9. THE PREEMPTION LEAD WIRE TO THE PREEMPTION WIRE LOOP IN SOUTHBOUND OFF RAMP IS RUN THROUGH A SEPARATE CONDUIT AND PULL BOXES FROM THE PREEMPTION WIRE LOOP BACK TO THE TRAFFIC CONTROLLER CABINET AT THE INTERSECTION OF THE SOUTHBOUND OFF RAMP AND SKYWAY DRIVE. THE EXISTING PREEMPTION LEAD WIRE SHALL BE PULLED OUT OF THE EXISTING CONDUIT/ PULL BOXES AND STACKED. THE EXISTING PULL BOXES SHALL BE RESET/ STACKED. NEW 2 INCH NON-METALLIC CONDUIT SHALL BE INSTALLED BEHIND THE PROPOSED GUARDRAIL AND EDGE OF PAVEMENT. THE EXISTING 2 INCH NON-METALLIC CONDUIT SHALL BE ABANDONED IN PLACE, AND THE EXISTING STACKED PREEMPTION LEAD WIRE SHALL BE PULLED BACK INTO THE NEW CONDUIT/RESET PULL BOXES TO THE PULL BOX AT THE PREEMPTION WIRE LOOP IN SOUTHBOUND OFF RAMP.

UTILITY

1. EXISTING UTILITIES ON THESE PLANS WERE COMPILED FROM FIELD SURVEY AND VARIOUS OTHER SOURCES. LOCATIONS ARE NOT GUARANTEED TO BE ACCURATE NOR IS IT GUARANTEED THAT ALL UTILITIES ARE SHOWN. NO SEPARATE OR ADDITIONAL COMPENSATION WILL BE ALLOWED TO THE CONTRACTOR DUE TO ANY VARIANCE BETWEEN THE DATA SHOWN ON THE PLANS AND THE ACTUAL FIELD CONDITIONS ENCOUNTERED.

2. NO WORK SHALL BE STARTED UNTIL THE OWNERS OF THE VARIOUS UTILITIES ARE NOTIFIED BY THE CONTRACTOR OF THE PROPOSED CONSTRUCTION. THE CONTRACTOR IS ALSO REQUIRED TO CALL DIG SAFE AT 1-888-344-7233 AT LEAST 72 HOURS PRIOR TO THE START OF THE WORK.

3. THE CONTRACTOR SHALL NOTIFY THE RESIDENT 10 DAYS PRIOR TO THE CONSTRUCTION SO THE RESIDENT CAN ARRANGE FOR MAINE TURNPIKE UNDERGROUND UTILITY LOCATION. ALL PROPOSED SIGN LOCATIONS AND EXCAVATION LOCATIONS SHALL BE MARKED AT THE NOTIFICATION TIME. SIGN INSTALLATION AND EXCAVATION WILL NOT BE PERMITTED UNTIL THE AUTHORITY HAS LOCATED AND MARKED ITS' UNDERGROUND UTILITIES, OR NOTIFIED THE RESIDENT THERE ARE NO UNDERGROUND UTILITIES IN THE MARKED AREAS.

4. THE AUTHORITY HAS PROGRAMMED TWO FIELD VISITS FOR MAINE TURNPIKE UTILITY COORDINATION ON THIS PROJECT. SHOULD THE CONTRACTOR NEED ADDITIONAL SIGN LOCATIONS AND/OR ADDITIONAL EXCAVATION LOCATIONS MARKED, OR SHOULD THE CONTRACTOR FAIL TO MAINTAIN THE AUTHORITY'S PREVIOUSLY ESTABLISHED DIG SAFE MARKS, THE AUTHORITY SHALL DEDUCT THE ADDED MARKING COSTS FROM THE CONTRACTOR'S PAYMENTS.

5. NO UTILITY ADJUSTMENTS ARE SCHEDULED OR ANTICIPATED BY THE RESPECTIVE UTILITY OWNERS IN THIS CONTRACT

6. THE UTILITIES INVOLVED IN THIS CONTRACT ARE:
   - MAINE TURNPIKE AUTHORITY
   - BUCKEYE PARTNERS
   - PORTLAND PIPELINE CORPORATION
   - UNITIL CORPORATION
   - PORTLAND WATER DISTRICT
   - PAN AM RAILWAYS

7. SEE SPECIFICATIONS FOR REQUIRED UTILITY COORDINATION. QUALIFIED EQUIPMENT OPERATORS ARE REQUIRED FOR EXCAVATION WORK WITHIN SEVERAL OF THE UTILITY RIGHTS-OF-WAY.

EROSION CONTROL

1. THE ANTICIPATED EROSION CONTROL DEVICES ARE SHOWN ON THE PLANS. THE CONTRACTOR SHALL PROPOSE ACTUAL TYPE AND LOCATION OF DEVICES FOR APPROVAL BY THE RESIDENT. ADDITIONAL MEASURES MAY BE PROPOSED BY THE CONTRACTOR DUE TO SITE OR WEATHER CONDITIONS. THE RESIDENT MAY DIRECT THE CONTRACTOR TO IMPLEMENT ADDITIONAL MEASURES. ANY ADDITIONAL MEASURES APPROVED BY THE RESIDENT WILL BE MEASURED FOR PAYMENT UNDER THE APPROPRIATE BID ITEMS.

2. 4" LOAM HAS BEEN ESTIMATED FOR 100% OF THE DISTURBED SLOPE AREA UNLESS OTHERWISE SPECIFIED ON THE PLANS. ACTUAL PLACEMENT OF THE LOAM SHALL BE AS DESIGNATED BY THE RESIDENT.

3. NEWLY DISTURBED EARTH SHALL BE MULCHED BY THE END OF EACH WORK DAY. MULCH SHALL BE MAINTAINED ON A DAILY BASIS. THIS WORK SHALL BE PAID FOR UNDER ITEM 619.1202 TEMPORARY MULCH.

4. ALL TEMPORARY AND PERMANENT EROSION CONTROL DEVICES SHALL BE INSTALLED IN ACCORDANCE WITH THE MAINE DEPARTMENT OF TRANSPORTATION BEST MANAGEMENT PRACTICES.

5. TEMPORARY STONE CHECK DAMS WILL BE INSTALLED IN ACCORDANCE WITH THE MAINE DOT BEST MANAGEMENT PRACTICES.

6. TEMPORARY SEED SHALL BE APPLIED TO ALL DISTURBED AREAS THAT WILL NOT BE COMPLETED WITHIN 30 DAYS.

7. TEMPORARY BERMS AND TEMPORARY SLOPE DRAINS ARE ANTICIPATED AT ALL STONE DOWNSPOUT LOCATIONS WHILE GROWTH IS BEING ESTABLISHED ON SIDE SLOPES.

8. TEMPORARY EROSION CONTROL BLANKET, ITEM 613.319 SHALL BE INSTALLED IN ALL DITCHES AND 2:1 SLOPES FROM TOP TO TOE OF SLOPE. LOAM AND SEED SHALL BE PLACED PRIOR TO THE INSTALLATION OF THE EROSION CONTROL BLANKET. LIMITS OF THE EROSION CONTROL BLANKET IN DITCHES SHALL BE 6' WIDE OR AS DESIGNATED BY THE RESIDENT.

9. ALL SLOPES SHALL BE SEEDED WITH SEEDING METHOD NO. 2, OR 3. UNLESS OTHERWISE NOTED, SEEDING METHOD NO. 2 SHALL BE UTILIZED ON ALL NON-GUARDRAIL FORE SLOPES, FROM THE EDGE OF SHOULDER TO THE DITCH LINE OR TOE OF FILL; SEEDING METHOD NO. 3 SHALL BE UTILIZED ON ALL BACK SLOPES AND ON ALL GUARDRAIL FRONT SLOPES.

10. CONTRACTOR SHALL BE RESPONSIBLE FOR PLACEMENT AND MAINTENANCE OF EROSION CONTROL ITEMS AROUND STOCKPILES, IN ACCORDANCE WITH "MAINE EROSION AND SEDIMENT CONTROL HANDBOOK FOR CONSTRUCTION: BEST MANAGEMENT PRACTICES" (BMP). PAYMENT FOR THESE ITEMS SHALL BE INCIDENTAL TO THE MATERIAL STOCKPILED.

SITE ACCESS (INCLUDES LOCAL ROADS)

1. ACCESS THROUGH AREAS BEYOND THE LIMITS OF DISTURBANCE ARE TO BE APPROVED BY THE RESIDENT. DESIGNATED WETLAND AREAS SHALL NOT TO BE DISTURBED.

2. ACCESS ACROSS EXISTING UTILITY RIGHTS OF WAY OR EASEMENTS WILL NOT BE PERMITTED.

3. CONTRACTOR IS REQUIRED TO MAINTAIN ACCESS TO ALL DRIVEWAYS AND SIDE ROADS DURING CONSTRUCTION UNLESS OTHERWISE SHOWN ON THE PLANS.

4. ALL TURNPIKE AND LOCAL ROADWAYS USED IN ACCESSING THE SITE SHALL REMAIN CLEAN IN ACCORDANCE WITH THE MAINE DOT STANDARD SPECIFICATIONS.

Date:1/23/2015

EXIT 46 DRAINAGE SUMMARY

LOCATION	ITEM NAME	30" REINFORCED CONCRETE PIPE - CLASS III	REBUILD CATCH BASIN TO GRADE - TYPE II	REBUILD CATCH BASIN TO GRADE - TYPE B1	EROSION CONTROL BLANKET	BALED HAY IN PLACE	30 INCH TEMP. SILT FENCE	REMARKS
	Item No.	603.205	604.184	604.187	613.319	656.50	656.632	
	Unit	LF	EA	EA	SY	EA	LF	
	Station							
SB Off Ramp	114+00 RT							NO WORK
SB On Ramp	605+50 LT			1				
SB On Ramp	607+60 LT			1				
NB Off Ramp	504+90 LT			1				
NB On Ramp	501+83.75 RT			1				IN CORNER OF EMPLOYEE PARKING LOT
NB On Ramp	504+00 RT	32			120	10	50	EXTEND TWIN 30" DIAMETER RCP CULVERTS 16 FEET EACH; RIPRAP INLETS (SEE NOTE 1)
		32	**0**	**4**	**120**	**10**	**50**	

NOTE 1 - ALTERNATIVE TO RCP CLASS III IS HDPE PIPE WITH HDPE DUAL WALL ADAPTER FITTING AND CONCRETE COLLAR - SEE SPECIFICATIONS

COMMON EXCAVATION FOR ESTIMATE	**NB ON RAMP**		**SB OFF RAMP**	
COMMON EXCAVATION (FROM CROSS SECTIONS)	0		0	
GRUBBING IN FILL	445		85	
TOTAL COMMON EXCAVATION		445		85
ITEM 203.20 COMMON EXCAVATION SAY		**450 cy**		**90 cy**
FILL FOR BORROW CALCULATIONS				
COMMON FILL (FROM CROSS SECTIONS)	550		45	
GRUBBING IN FILL	445		85	
TOTAL FILL		**995 cy**		**130 cy**
AVAILABLE COMMON EXCAVATION FOR BORROW CALCULATIONS				
(1) TOTAL COMMON EXCAVATION		445		85
DEDUCTIONS:				
GRUBBING IN CUT	0		0	
GRUBBING IN FILL	445		85	
(2) TOTAL DEDUCTIONS		445		85
TOTAL AVAILABLE COMMON EXCAVATION (1) MINUS (2)		0		0
TOTAL AVAILABLE NON-ROCK EXCAVATION		**0 cy**		**0 cy**
COMPUTATION OF GRANULAR BORROW FOR ESTIMATE				
GRANULAR BORROW FOR WETLAND AREAS	70		0	
GRANULAR BORROW =	70 x 1.15=	81	0 x 1.15=	0
ITEM 203.25 GRANULAR BORROW SAY		**85 cy**		**0 cy**
COMPUTATION FOR COMMON BORROW FOR ESTIMATE				
(3)TOTAL FILL		995		130
TOTAL AVAIL. NON-ROCK EXCAV.	0 x 0.85 =	0	0 x 0.85 =	0
(4)TOTAL AVAILABLE EXCAVATION	=	**0 cy**	=	**0 cy**
BORROW NEEDED = TOTAL FILL MINUS TOTAL AVAILABLE EXCAVATION, (3) MINUS (4)				
IF NO BORROW NEEDED, SURPLUS MATERIAL=				
(5)TOTAL AVAILABLE EXCAVATION MINUS TOTAL FILL (4) MINUS (3)		**-995 cy**		**-130 cy**
TOTAL PROJECT BORROW NEEDED (NO SURPLUS MATERIAL)				
COMMON BORROW FOR FILL AREAS	995		130	
COMMON BORROW =	995 x 1.15=	1,144	130 x 1.15=	150
SAY		**1,150 cy**		**150 cy**

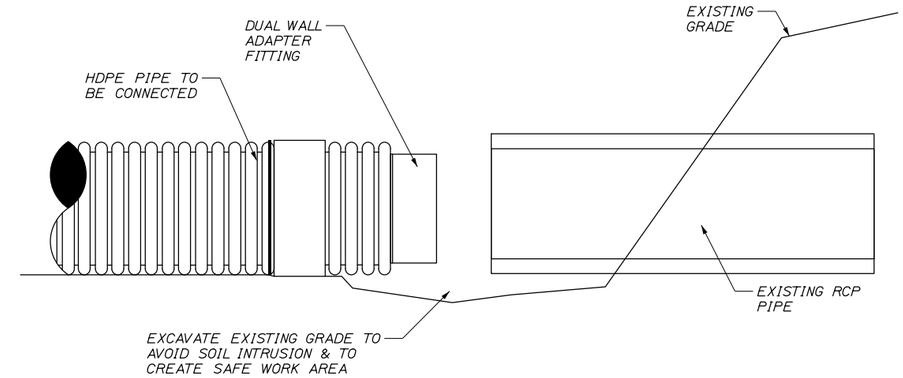

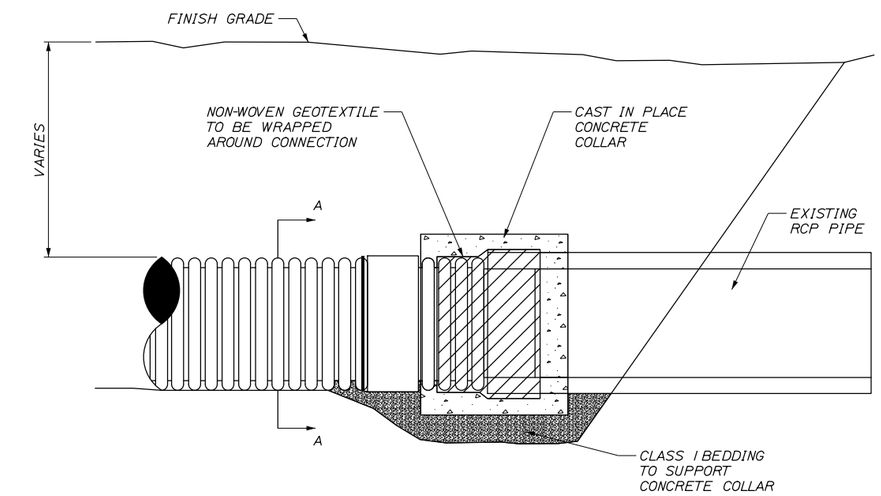

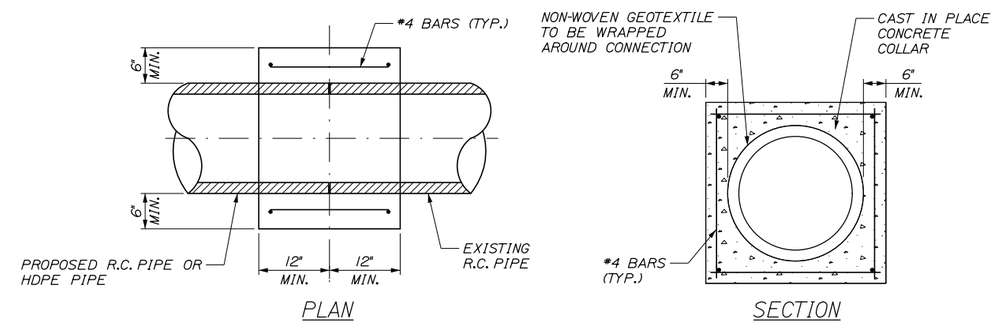

CONCRETE COLLAR
N.T.S.

NOTES:
1. CONNECTION AND PIPE TO BE BACKFILLED PER ASTM D2321.

Filename: 004_DrainSumm.dgn

Scale:

No.	Revision	By	Date

Designed by:

HNTB

CONSULTANT PROJECT MANAGER: Craig R. Morin, P.E.

	By	Date		By	Date
Designed	CAH	01/15	Checked	CRM	01/15
Drawn	MPC	01/15	In Charge of	RAL	01/15

HNTB CORPORATION
340 County Road, Suite 6-C
Westbrook, ME 04092
TEL (207) 774-5155
FAX (207) 228-0909

MAINE TURNPIKE

THE GOLD STAR MEMORIAL HIGHWAY

MTA PROJECT MANAGER: Ralph C. Norwood, IV, P.E., P.T.O.E.

BRIDGE REPAIRS
PAVEMENT REHABILITATION

DRAINAGE SUMMARY AND DETAILS

SHEET NUMBER: DS-01

CONTRACT:2015.03

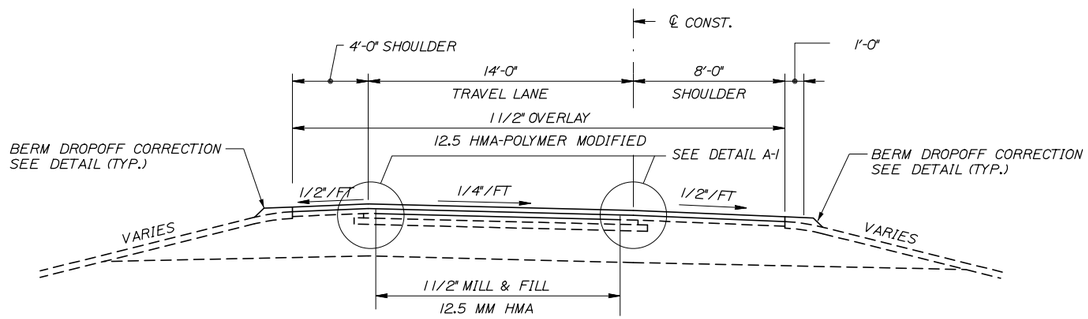

MILL AND FILL AND OVERLAY RAMP
SECTION A-A

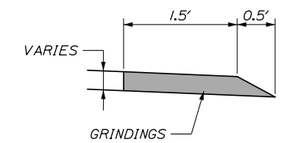

BERM DROPOFF CORRECTION DETAIL
(NON GUARDRAIL AREAS,
RIGHT SHOULDER SHOWN,
LEFT SHOULDER SIMILAR)

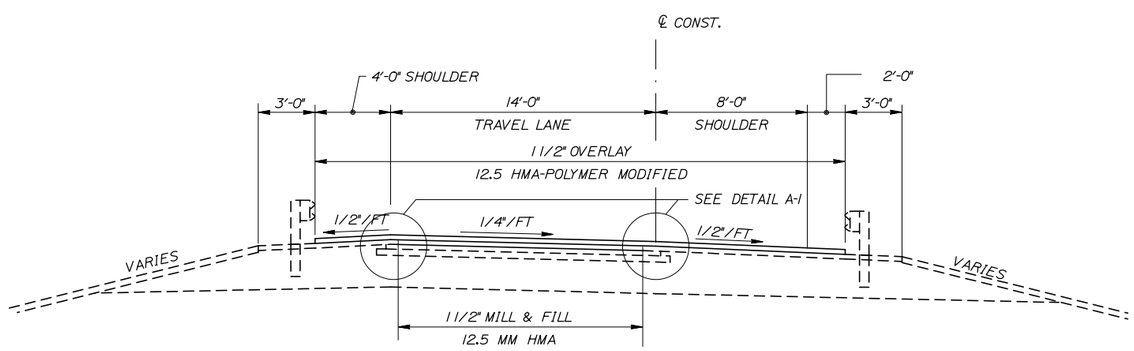

MILL AND FILL AND OVERLAY RAMP WITH GUARDRAIL
SECTION A-A

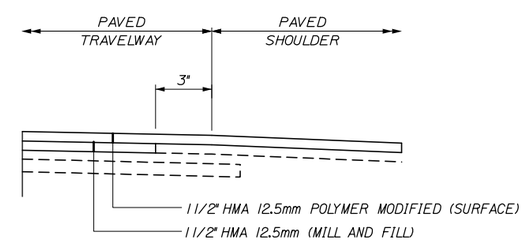

DETAIL A-1
N.T.S.

Date:1/23/2015

Filename: 005_TypSect.dgn

Scale:			
No.	Revision	By	Date

Designed by:

HNTB

CONSULTANT PROJECT MANAGER: Craig R. Morin, P.E.

	By	Date		By	Date
Designed	CAH	01/15	Checked	CRM	01/15
Drawn	MPC	01/15	In Charge of	RAL	01/15

HNTB CORPORATION
340 County Road, Suite 6-C
Westbrook, ME 04092
TEL (207) 774-5155
FAX (207) 228-0909

MAINE TURNPIKE

THE GOLD STAR
MEMORIAL HIGHWAY

MTA PROJECT MANAGER: Ralph C. Norwood, IV, P.E., P.T.O.E.

BRIDGE REPAIRS
PAVEMENT REHABILITATION
RAMP
TYPICAL SECTIONS

SHEET NUMBER: TS-01

CONTRACT:2015.03

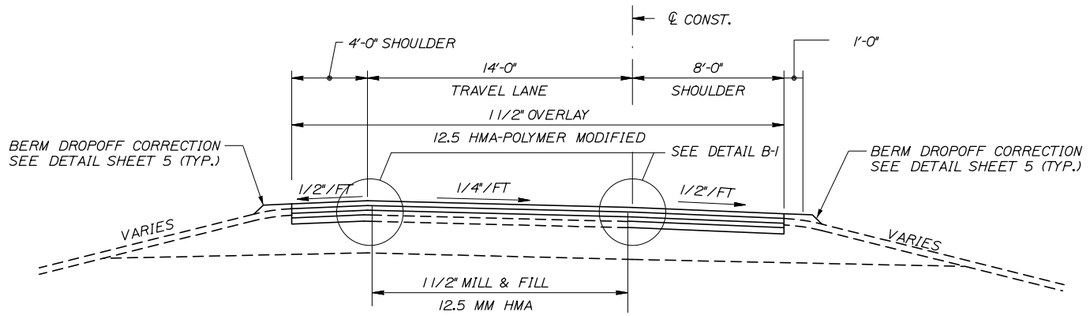

MILL AND FILL AND OVERLAY RAMP
AND FULL DEPTH SHOULDER PAVEMENT
SECTION B-B

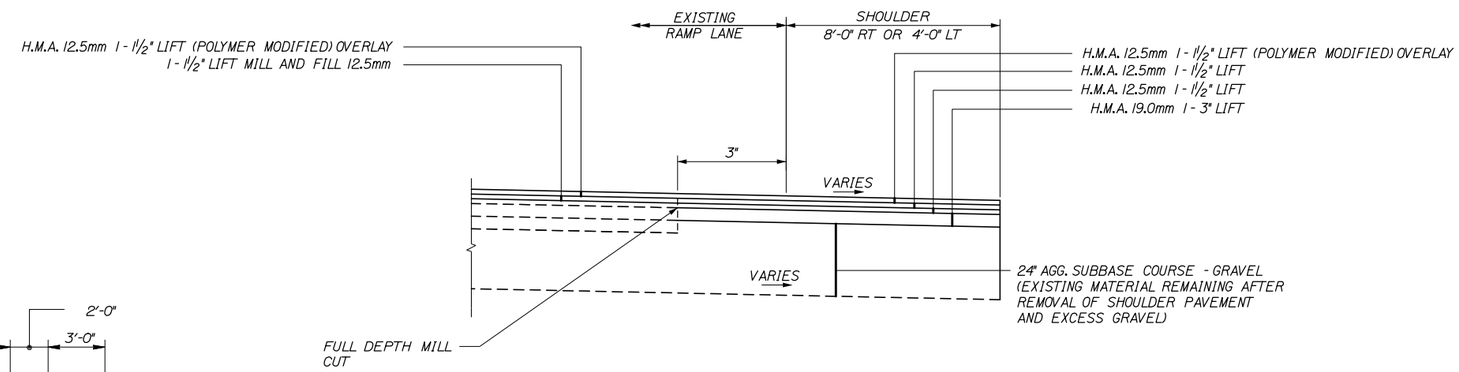

DETAIL B-1

N.T.S.

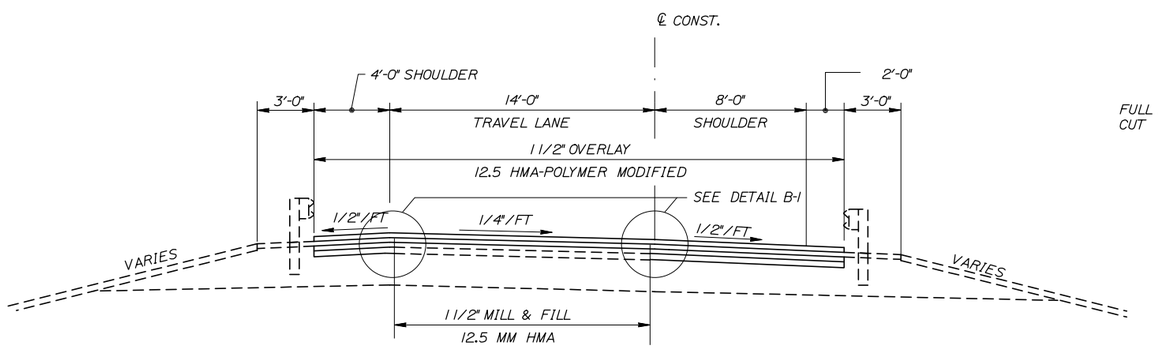

MILL AND FILL AND OVERLAY RAMP
AND FULL DEPTH SHOULDER PAVEMENT WITH GUARDRAIL
SECTION B-B

Date:1/23/2015

Filename: 006_TypSec2.dgn

Scale:

No.	Revision	By	Date

Designed by:

HNTB

CONSULTANT PROJECT MANAGER: Craig R. Morin, P.E.

	By	Date		By	Date
Designed	CAH	01/15	Checked	CRM	01/15
Drawn	MPC	01/15	In Charge of	RAL	01/15

HNTB CORPORATION
340 County Road, Suite 6-C
Westbrook, ME 04092
TEL (207) 774-5155
FAX (207) 228-0909

MAINE TURNPIKE

THE GOLD STAR MEMORIAL HIGHWAY

MTA PROJECT MANAGER: Ralph C. Norwood, IV, P.E., P.T.O.E.

BRIDGE REPAIRS
PAVEMENT REHABILITATION
RAMP
TYPICAL SECTIONS

SHEET NUMBER: TS-02

CONTRACT:2015.03

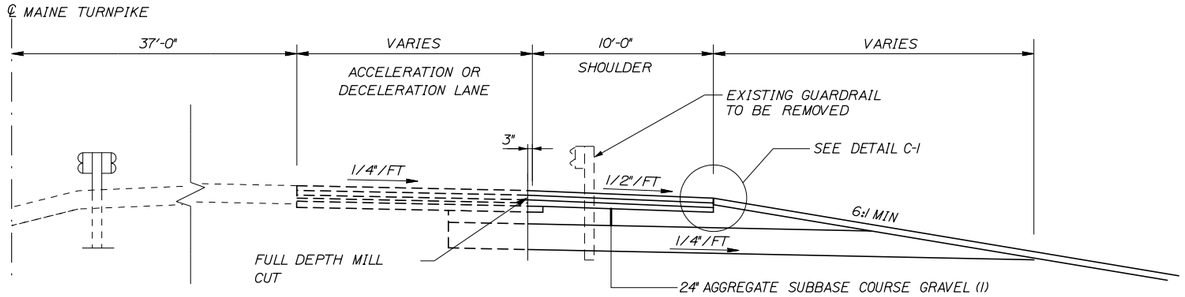

MAINE TURNPIKE SHOULDER WIDENING - FILL SLOPE
SECTION C-C

(1) BOX CUT AND INSTALL AGGREGATE SUBBASE COURSE GRAVEL ONLY IN AREAS WHERE GRAVEL IS NOT PRESENT.

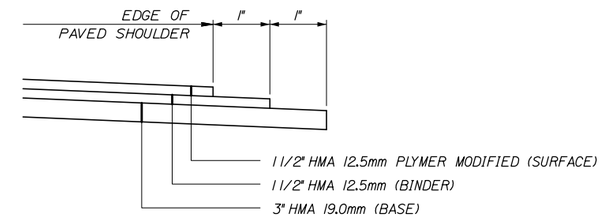

DETAIL C-1
N.T.S.

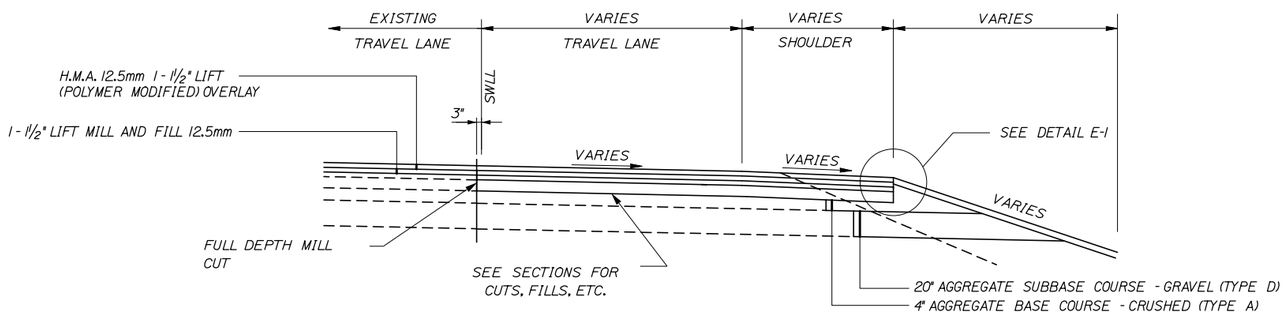

NORTHBOUND ON-RAMP/SOUTHBOUND OFF-RAMP
SHOULDER WIDENING
SECTION E-E

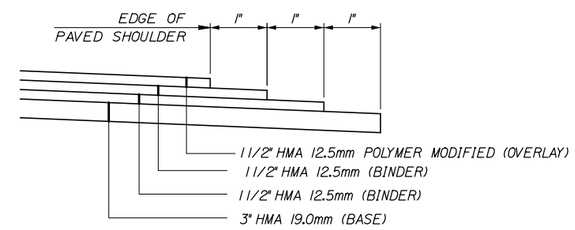

DETAIL E-1
N.T.S.

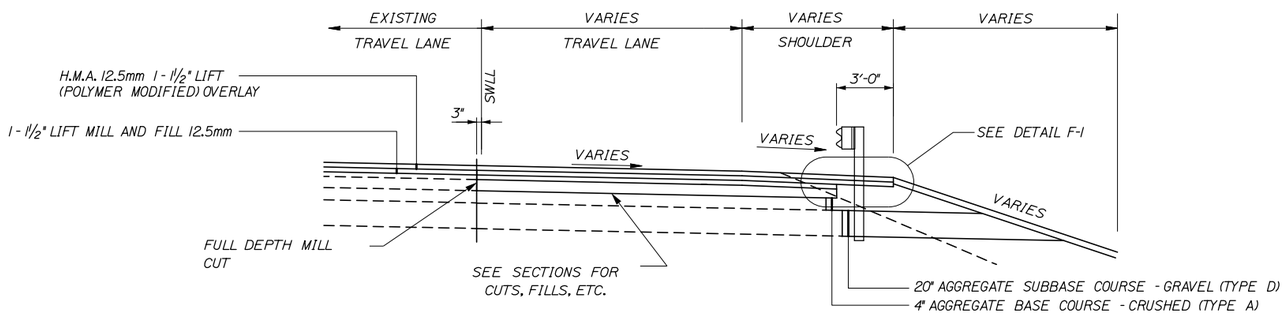

NORTHBOUND ON-RAMP/SOUTHBOUND OFF-RAMP
SHOULDER WIDENING
SECTION F-F

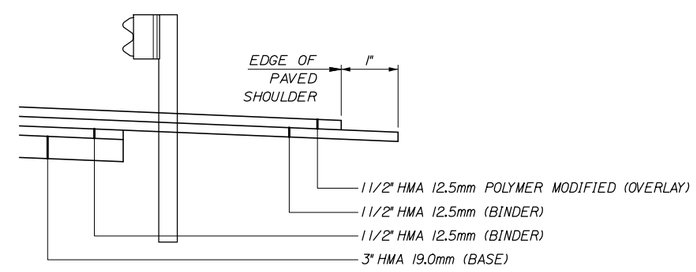

DETAIL F-1
N.T.S.

Date:1/23/2015

Filename: 007_TypSec3.dgn

Scale:

No.	Revision	By	Date

Designed by:

HNTB

CONSULTANT PROJECT MANAGER: Craig R. Morin, P.E.

	By	Date		By	Date
Designed	CAH	01/15	Checked	CRM	01/15
Drawn	MPC	01/15	In Charge of	RAL	01/15

HNTB CORPORATION
340 County Road, Suite 6-C
Westbrook, ME 04092
TEL (207) 774-5155
FAX (207) 228-0909

MAINE TURNPIKE

THE GOLD STAR MEMORIAL HIGHWAY

MTA PROJECT MANAGER: Ralph C. Norwood, IV, P.E., P.T.O.E.

BRIDGE REPAIRS
PAVEMENT REHABILITATION
RAMP
TYPICAL SECTIONS

SHEET NUMBER: TS-03

CONTRACT:2015.03

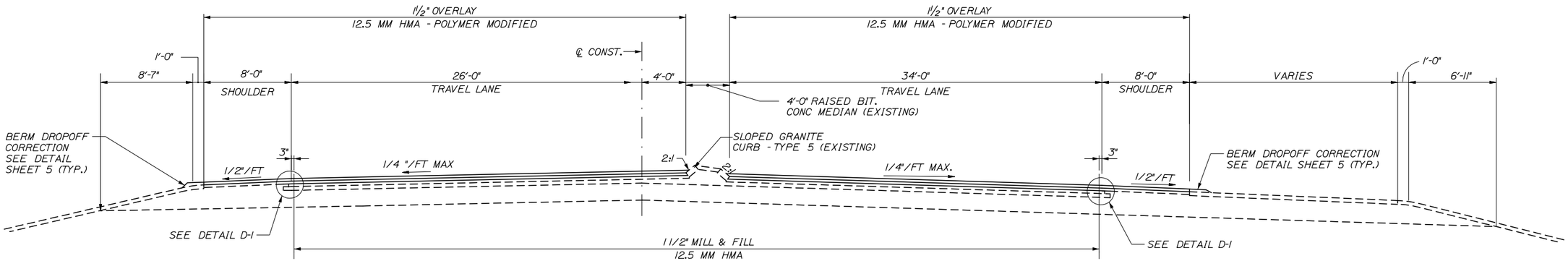

PROPOSED TOLL PLAZA APPROACH SECTION
SECTION D-D

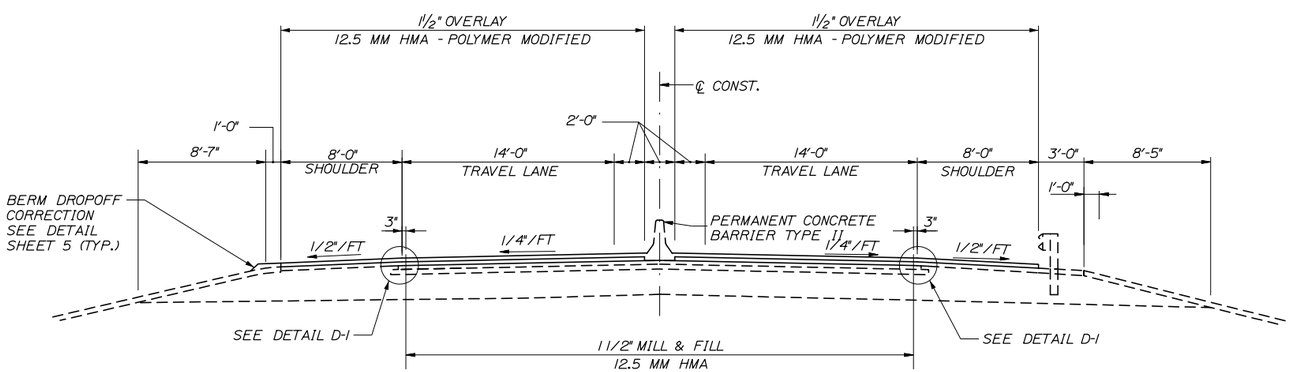

PROPOSED TOLL PLAZA / RAMP SECTION
SECTION D-D

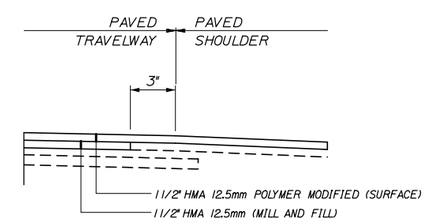

DETAIL D-1
N.T.S.

Date:1/23/2015

Filename: 008_TypSec4.dgn

Scale:			
No.	Revision	By	Date

Designed by:

HNTB

CONSULTANT PROJECT MANAGER: Craig R. Morin, P.E.

	By	Date		By	Date
Designed	CAH	01/15	Checked	CRM	01/15
Drawn	MPC	01/15	In Charge of	RAL	01/15

HNTB CORPORATION
340 County Road, Suite 6-C
Westbrook, ME 04092
TEL (207) 774-5155
FAX (207) 228-0909

MAINE TURNPIKE

THE GOLD STAR MEMORIAL HIGHWAY

MTA PROJECT MANAGER: Ralph C. Norwood, IV, P.E., P.T.O.E.

BRIDGE REPAIRS
PAVEMENT REHABILITATION
RAMP
TYPICAL SECTIONS

SHEET NUMBER: TS-04

CONTRACT:2015.03

GUARDRAIL EARTHWORK AND PAVEMENT REPAIR NOTES

1. ALL EARTHWORK AND PAVEMENT REPAIRS ASSOCIATED WITH GUARDRAIL INSTALLATIONS AND/OR MODIFICATIONS FOR THIS CONTRACT SHALL BE INCIDENTAL TO THE GUARDRAIL ITEMS UNLESS OTHERWISE NOTED.

2. ALL DISTURBED AREAS DUE TO THE WORK PERFORMED UNDER THIS CONTRACT FOR GUARDRAIL REPAIRS, MODIFICATION AND/OR INSTALLATIONS SHALL BE REPAIRED AND RESTORED TO ORIGINAL CONDITION. GRASSED AREAS SHALL RECEIVE 4" OF LOAM, SEED, FERTILIZER AND MULCH. IN PAVED AREAS, SUBBASE GRAVEL SHALL BE REPLACED AND RECOMPACTED WITH MAINE DOT TYPE-D GRAVEL AND HOT MIX ASPHALT TO A THICKNESS TO MATCH SURROUNDING PAVEMENT.

3. COMPACTION OF EARTH AND/OR SUBBASE GRAVEL AROUND GUARDRAIL POSTS DISTURBED DURING THE WORK IS REQUIRED. ALL POSTS SHALL BE PLUMB AFTER COMPACTION.

4. EXCAVATION NECESSARY TO MAINTAIN DRAINAGE WAYS OUTSIDE OF THE FLEAT 350 WIDENING OR THE SHOULDER WIDENING WORK AREA SHALL BE PAID FOR UNDER ITEM 631.12 ALL PURPOSE EXCAVATOR AS APPROVED BY THE RESIDENT ENGINEER. EXCAVATED MATERIAL SHALL BE USED TO GRADE ANY PROPOSED SLOPE AREA OUTSIDE OF 1:1 SLOPE LIMIT OR USED TO FLATTEN SLOPES OUTSIDE THE WORK AREA AS APPROVED BY THE RESIDENT. PLACEMENT AND COMPACTION OF THE EXCAVATED MATERIAL WILL NOT BE MEASURED SEPARATELY FOR PAYMENT.

5. SLOPES CONSTRUCTED FROM THE ABOVE NOTED EXCAVATED MATERIAL SHALL BE LOAMED, SEEDED AND MULCHED. LOAM, SEED AND MULCH WILL NOT BE MEASURED FOR PAYMENT AND SHALL BE INCIDENTAL TO THE CONTRACT.

GUARDRAIL INSTALLATION AND MODIFICATION NOTES

1. THE CONTRACTOR SHALL FOLLOW ALL MANUFACTURER'S INSTALLATION INSTRUCTIONS FOR THE INSTALLATION AND/OR MODIFICATION OF ANY AND ALL GUARDRAIL COMPONENTS TO BE INSTALLED UNDER THIS CONTRACT. THE CONTRACTOR SHALL NOTIFY THE RESIDENT ENGINEER IF THE CONTRACTOR DISCOVERS CONFLICTS OR IRREGULARITIES OF ANY SORT BETWEEN THE MANUFACTURER'S INSTALLATION INSTRUCTIONS AND THESE CONTRACT DOCUMENTS.

2. THE CONTRACTOR IS REQUIRED TO HAVE AN APPROVED CRASH END TREATMENT ON ALL GUARDRAIL ENDS IN ALL WORK AREAS AT THE END OF EACH DAY. THE CONTRACTOR SHALL ENSURE THAT ENOUGH TIME EXISTS IN THE WORK DAY TO COMPLETE ALL MODIFICATIONS AND/OR INSTALLATIONS TO END TERMINALS. THE CONTRACTOR SHALL ENSURE THAT ALL PARTS AND MANPOWER ARE ON-SITE PRIOR TO UNDERTAKING ANY GUARDRAIL MODIFICATIONS.

3. GUARDRAIL HEIGHT SHALL BE INSTALLED OR ADJUSTED TO 30" +0", -1/2" HEIGHT. GUARDRAIL HEIGHT SHALL BE MEASURED FROM THE EDGE OF PAVEMENT WHEN WITHIN 2 FEET. IF GUARDRAIL IS OFFSET FROM EDGE OF PAVEMENT GREATER THAN 2 FEET, THEN HEIGHT OF RAIL SHALL BE MEASURED AT GROUND ELEVATION ADJACENT TO EACH POST BELOW THE RAIL TO THE TOP OF GUARDRAIL AND AFTER FINAL GRADING OF SHOULDER.

4. THE CONTRACTOR SHALL REMOVE AND DISPOSE OF ALL CUT BOLTS, DISCARDED PARTS, TRASH, PAVEMENT DEBRIS, ETC., AFTER COMPLETING GUARDRAIL MODIFICATIONS AND/OR INSTALLATIONS.

5. CONNECTIONS FOR PROPOSED RAIL TO EXISTING RAIL SHALL BE INCIDENTAL TO THE INSTALLATION OF PROPOSED GUARDRAIL.

6. FLEAT 350 TERMINALS INSTALLED UNDER THIS CONTRACT SHALL BE INSTALLED AT A HEIGHT OF 27.5" FOR THE LENGTH OF THE FLEAT TERMINAL (37.5') THEN SHALL TRANSITION UP TO THE REQUIRED HEIGHT OF RAIL OF 30" +0", -1/2" OVER A 25 LINEAR FOOT LENGTH, AFTER POST 7. HEIGHT OF FLEAT 350 RAIL SHALL BE MEASURED FROM THE GROUND ELEVATION UNDER THE FLEAT RAIL PANELS TO THE TOP OF RAIL.

7. SOIL ANCHOR TUBES INSTALLED AS PART OF CAT, FLEAT OR TRAILING TERMINAL ENDS SHALL NOT PROTRUDE FROM THE GROUND MORE THAN 3½". ADDITIONAL SITE GRADING MAY BE REQUIRED TO ADJUST SOIL TUBE REVEAL AND IF REQUIRED SHALL NOT DIRECT STORMWATER SURFACE DRAINAGE TOWARDS THE SHOULDER OR TRAVEL WAY. ADDITIONAL SITE GRADING SHALL BE INCIDENTAL TO THE END TERMINAL INSTALLATION.

8. TRANSITION RAIL HEIGHT ON TERMINAL END-ANCHORED ENDS FROM 27½" AT THE END OF THE RAIL TO 30" HEIGHT OVER A 25 LINEAR FOOT LENGTH.

EROSION

1. EROSION CONTROL BLANKET SHALL BE INSTALLED ON ALL DISTURBED 2:1 SLOPES AND IN FLOW LINE OF ALL DISTURBED DITCHES AFTER LOAM AND SEED HAVE BEEN INSTALLED.

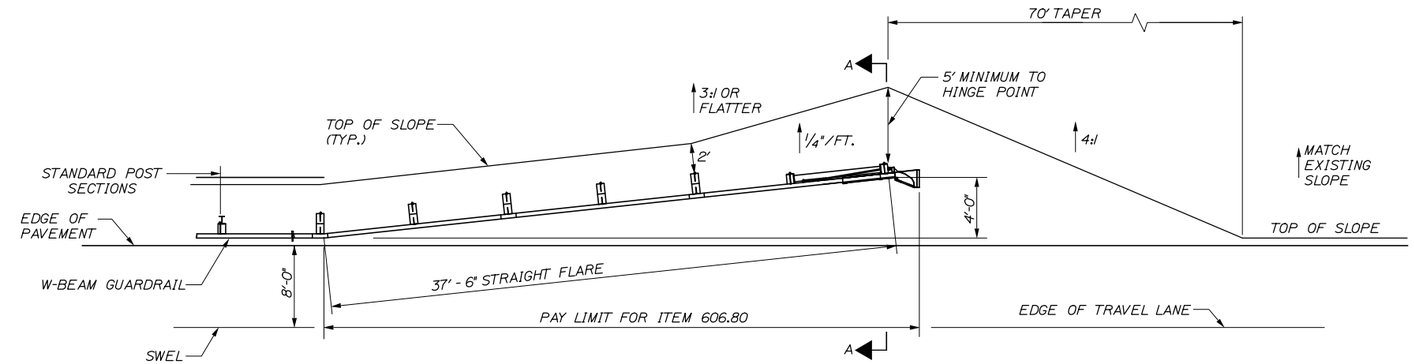

WIDEN SHOULDER FOR GUARDRAIL 350 FLARED TERMINAL
PLAN
N.T.S.

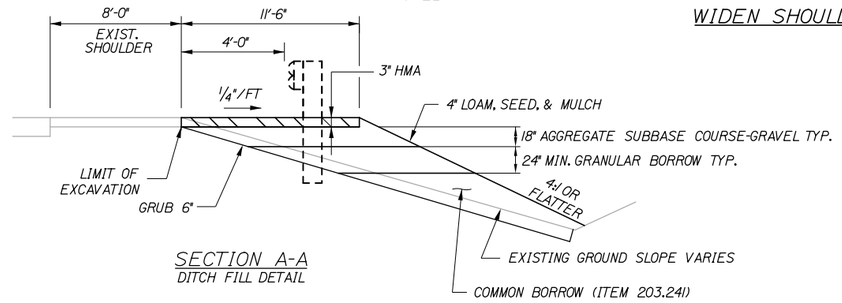

SECTION A-A
DITCH FILL DETAIL

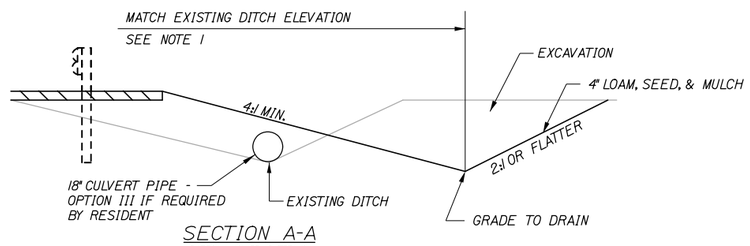

SECTION A-A
DITCH CUT DETAIL

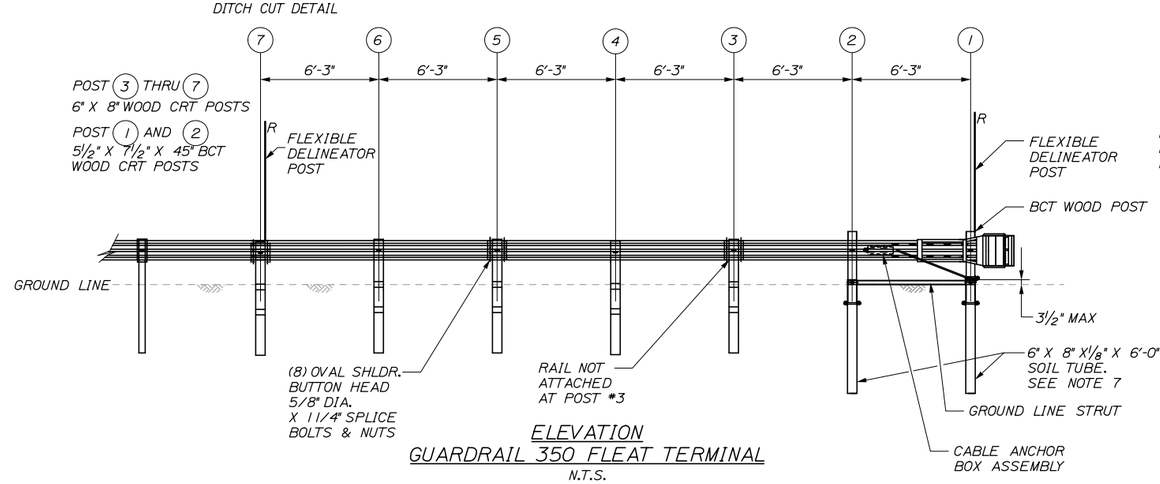

ELEVATION
GUARDRAIL 350 FLEAT TERMINAL
N.T.S.

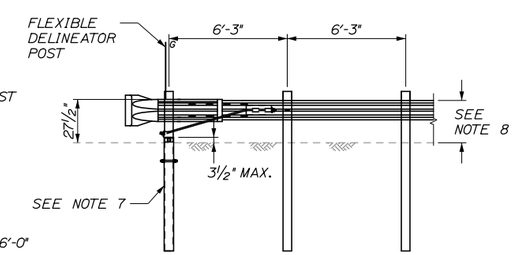

TERMINAL END - ANCHORED END
(ITEM 606.278)
N.T.S.

Date:1/23/2015

Filename: 009_FLEAT.dgn

Scale:			
No.	Revision	By	Date

Designed by:

HNTB

CONSULTANT PROJECT MANAGER: Craig R. Morin, P.E.

	By	Date		By	Date
Designed	CAH	01/15	Checked	CRM	01/15
Drawn	MPC	01/15	In Charge of	RAL	01/15

HNTB CORPORATION
340 County Road, Suite 6-C
Westbrook, ME 04092
TEL (207) 774-5155
FAX (207) 228-0909

MAINE TURNPIKE

THE GOLD STAR MEMORIAL HIGHWAY

MTA PROJECT MANAGER: Ralph C. Norwood, IV, P.E., P.T.O.E.

BRIDGE REPAIRS
PAVEMENT REHABILITATION
EXIT 46
GUARDRAIL DETAILS

SHEET NUMBER: MD-01

CONTRACT:2015.03

SCHEDULE OF EXIT 46 GUARDRAIL WORK

LOCATION OF WORK																			
		EXISTING		PROPOSED															
MILE MARKER	LOCATION DESCRIPTION	APPROX. STATION	APPROX. STATION of TERMINAL END or ENDPOST	STATION LEADING END	STATION TRAILING END	ITEM 606.178 GUARDRAIL BEAM	ITEM 606.2652 TERMINAL END - REMOVE & STACK	ITEM 606.278 TERMINAL END- ANCHORED END	ITEM 606.353 DELINEATOR POST	ITEM 606.355 - DELINEATOR POST - REMOVE AND STACK	ITEM 606.3605 REMOVE, MODIFY and RESET SINGLE RAIL	ITEM 606.3621 GUARDRAIL ADJUST - SINGLE RAIL	ITEM 606.3631 - GUARDRAIL REMOVE AND DISPOSE	ITEM 606.471 SINGLE OFFSET BLOCK - W BEAM	ITEM 606.48 SINGLE GALVANIZED STEEL POST	ITEM 606.701 ASYYMMETRICAL THRIE BEAM TRANSITION	ITEM 606.81 GUARDRAIL FLEAT 350 FLARED TERMINAL, REMOVE AND RESET	ITEM 606.93 GUARDRAIL FLEAT 350 FLARED TERMINAL, REMOVE AND STACK	DESCRIPTION OF WORK
SB On Ramp	Right Shoulder	603+75	607+34.41	603+75	607+46.91	25.0	1	1	3	3		362.5		2	2				See Installation Note 1
SB On Ramp	Right Shoulder	207+12.5	208+51.88	207+12.5	208+64.38	25.0	1	1	3	3		137.5		2	2				See Installation Note 1
SB Off Ramp	Left Shoulder	113+37.5	114+88.61	113+37.5	114+88.61	25.0			2	2		150.0		2	2	1			See Installation Note 1. Replace Existing Thrie Rail Transition with Asymmetrical Thrie Rail Transition
SB Off Ramp	Right Shoulder	114+63.86	118+20.5 / 605+52.5	113+00	118+20.5 / 605+52.5	25.0			2	2	357.0			2	2		1		See Installation Note 1; FLEAT to be reset from 114+63.86
SB Off Ramp	Right Shoulder	118+20.5 / 605+52.5	604+27.5	118+20.5 / 605+52.5	604+27.5	25.0					125.0			2	2				See Installation Note 1
SB Off Ramp	Right Shoulder	604+27.5	602+50	604+27.5	602+37.5	25.0	1	1	1	1		190.0		2	2				See Installation Note 1
NB Off Ramp	Left Shoulder	308+75	310+25	308+75	310+37.5		1	1	3	3		218.8							See Installation Note 1.
NB Off Ramp	Right Shoulder	308+81.25	310+93.75	308+81.25	311+06.25		1	1	3	3		212.5							See Installation Note 1.
NB Off Ramp	Left Shoulder	315+62.5	316+68.15	315+62.5	316+68.15	25.0			2	2		100.0		2	2	1			See Installation Note 1. Replace Existing Thrie Rail Transition with Asymmetrical Thrie Rail Transition
NB Off Ramp	Right Shoulder	316+45.4	318+16.74/ 504+95.88	316+45.4	318+16.74/ 504+95.88	25.0			2	2		175.0		2	2				See Installation Note 1.
NB Off Ramp	Right Shoulder	318+16.74/ 504+95.88	501+50	318+16.74/ 504+95.88	501+37.5	25.0	1	1	1	1		350.0		2	2				See Installation Notes 1 and 2.
NB Mainline	Right Shoulder	2300+31.35	2302+43.75				1			3	150.0		62.5					1	Remove Entire Guardrail Run After Sign Removal; Remove,Modify and Reset 150 feet of guardrail to SB off shoulder widening
SB Mainline	Right Shoulder	2304+56.25	2303+31.25				1			3			125.0					1	Remove Entire Guardrail Run After Slope Flattening
					TOTALS	**225.0**	**8.0**	**6.0**	**22.0**	**28.0**	**632.0**	**1896.3**	**187.5**	**18.0**	**18.0**	**2.0**	**1.0**	**2.0**	

General Notes:

1 - Approximate station is the leading end or trailing end of the existing Guardrail Assembly.
2 - Repair damaged Guardrail Beams as indicated or as directed by the Resident Engineer.
3 - Replace all Rigid Guardrail Delineator Posts with Flexible Delineators as per Section 606 Guardrail Delineator Post.
4 - Indicated installation location of FLEAT units refers to location of the FLEAT Crash Head.

Date:1/23/2015

Filename: 010_GuardrailSummary.dgn

Scale:

No.	Revision	By	Date

Designed by:

HNTB

CONSULTANT PROJECT MANAGER: Craig R. Morin, P.E.

	By	Date		By	Date
Designed	CAH	01/15	Checked	CRM	01/15
Drawn	MPC	01/15	In Charge of	RAL	01/15

HNTB CORPORATION
340 County Road, Suite 6-C
Westbrook, ME 04092
TEL (207) 774-5155
FAX (207) 228-0909

MAINE TURNPIKE

THE GOLD STAR MEMORIAL HIGHWAY

MTA PROJECT MANAGER: Ralph C. Norwood, IV, P.E., P.T.O.E.

BRIDGE REPAIRS
PAVEMENT REHABILITATION
EXIT 46
GUARDRAIL SUMMARY

SHEET NUMBER: MD-02

CONTRACT:2015.03

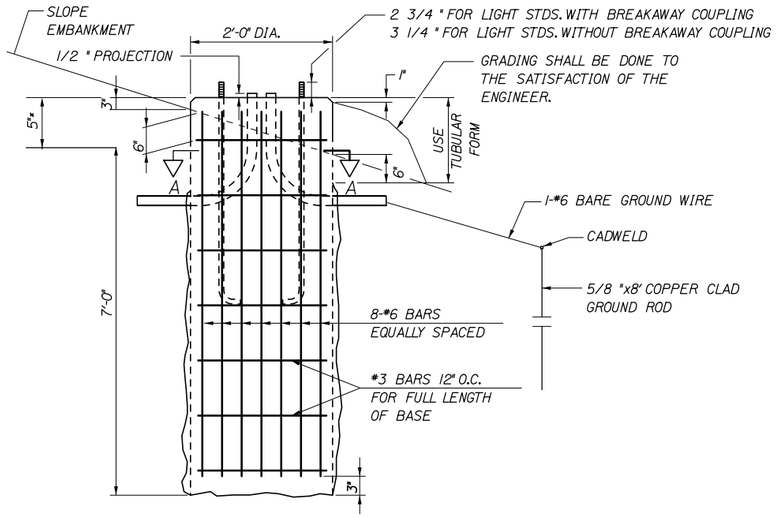

24 INCH FOUNDATION

NOT TO SCALE

NOTE:
WHERE SOLID ROCK IS ENCOUNTERED AT LESS THAN THE REQUIRED DISTANCE BELOW GROUND LEVEL, REINFORCING STEEL SHALL BE DOWELED INTO LEDGE AS SHOWN ON MAINE DOT STANDARD DETAIL 626(06). PAYMENT SHALL BE INCIDENTAL TO THE FOUNDATION PAY ITEM.

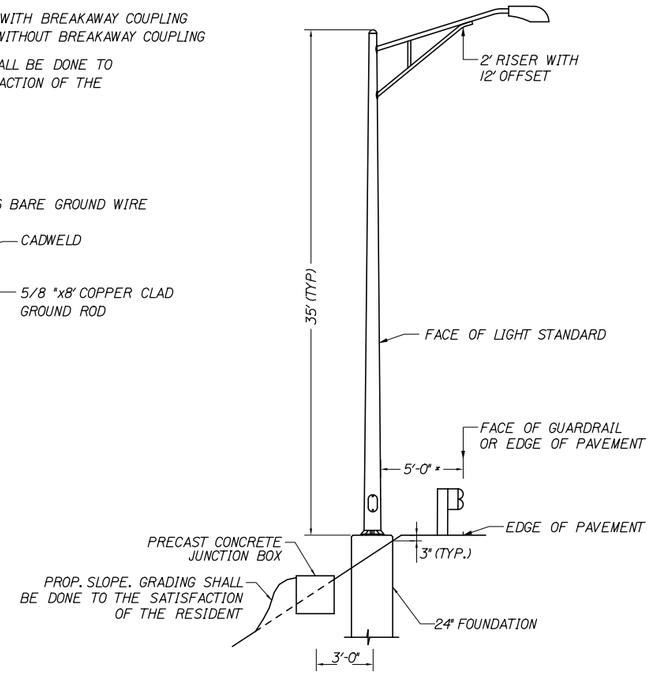

PLACEMENT OF LIGHT STANDARD

NO SCALE

* 5' TO FACE OF GUARDRAIL ON MAINLINE
4 FEET TO FACE OF GUARDRAIL ON LOCAL ROADS.

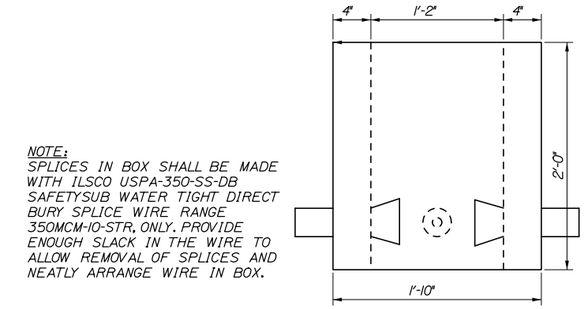

NOTE:
SPLICES IN BOX SHALL BE MADE WITH ILSCO USPA-350-SS-DB SAFETYSUB WATER TIGHT DIRECT BURY SPLICE WIRE RANGE 350MCM-10-STR, ONLY. PROVIDE ENOUGH SLACK IN THE WIRE TO ALLOW REMOVAL OF SPLICES AND NEATLY ARRANGE WIRE IN BOX.

ELEVATION

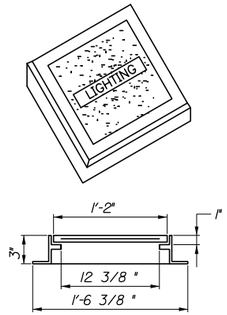

ELECTRICAL PULL BOX COVER

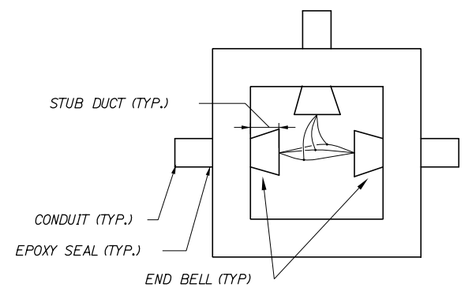

TOP

PRECAST CONCRETE JUNCTION BOX

NOT TO SCALE

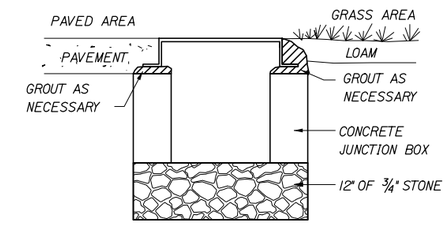

JUNCTION BOX COVER & FRAME

NOTE:
INSTALL JUNCTION BOXES ON GRADE, GROUT AS NECESSARY AS SHOWN ABOVE.

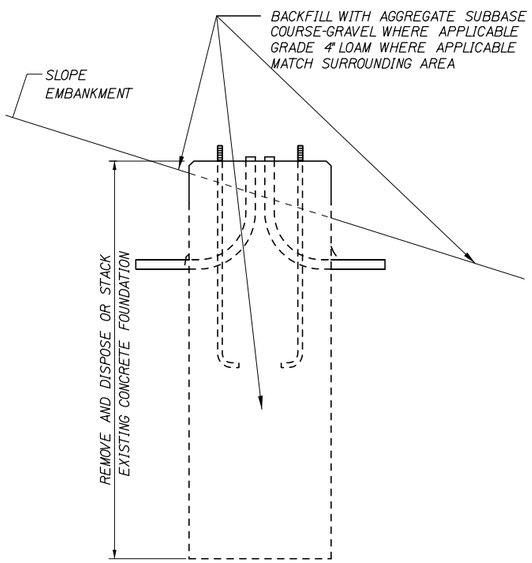

REMOVAL OF CONCRETE FOUNDATION

NOT TO SCALE

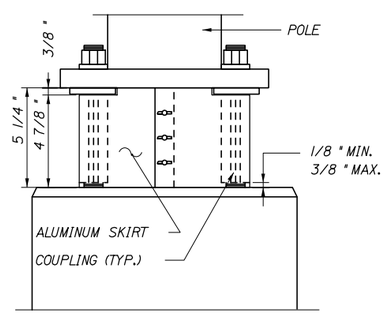

BREAKAWAY COUPLINGS AND SKIRT DETAIL *

NOT TO SCALE

* BREAKAWAY COUPLINGS SHALL BE REQUIRED ON ALL NEW LIGHT STANDARDS

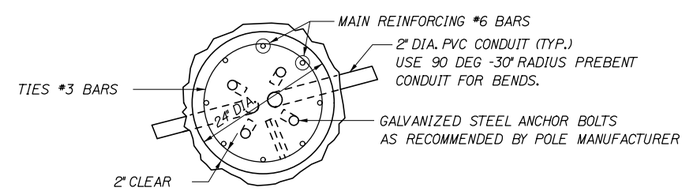

SECTION A-A

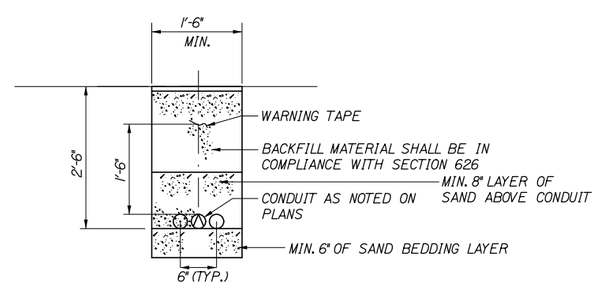

TRENCH CROSS SECTION

NOT TO SCALE

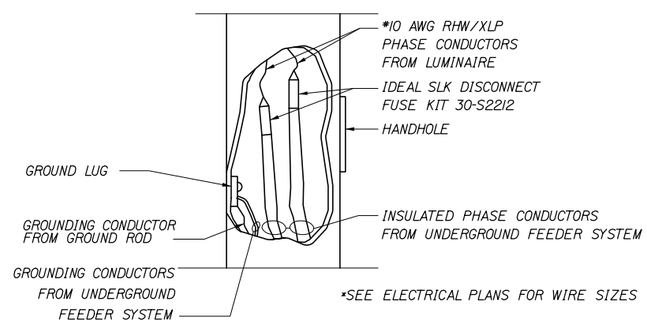

*SEE ELECTRICAL PLANS FOR WIRE SIZES

TYPICAL POLE WIRING DETAIL

NOT TO SCALE

Date:1/23/2015

Filename: 011_LightingDets.dgn

Scale:			
No.	Revision	By	Date

Designed by:

HNTB

CONSULTANT PROJECT MANAGER: Craig R. Morin, P.E.

	By	Date		By	Date
Designed	CAH	01/15	Checked	CRM	01/15
Drawn	MPC	01/15	In Charge of	RAL	01/15

HNTB CORPORATION
340 County Road, Suite 6-C
Westbrook, ME 04092
TEL (207) 774-5155
FAX (207) 228-0909

MAINE TURNPIKE

THE GOLD STAR MEMORIAL HIGHWAY

MTA PROJECT MANAGER: Ralph C. Norwood, IV, P.E., P.T.O.E.

BRIDGE REPAIRS
PAVEMENT REHABILITATION

LIGHTING DETAILS

SHEET NUMBER: MD-03

CONTRACT:2015.03

DIMENSIONS FOR SLOPE OF 2:1

D	a (FT)	b (FT)	c (FT)	e (FT)	f (FT)	g (FT)	STONE DEPTH (FT)	STONE (CY)
12"	1.00	4.00	3.00	2.00	6.00	1.00	1.50	1.30
15"	1.00	4.50	3.37	2.25	6.75	1.63	1.50	1.70
18"	1.00	5.00	3.75	2.50	7.50	2.25	1.50	2.09
21"	1.00	5.50	4.13	2.75	8.25	2.88	1.50	2.58
24"	1.00	6.00	4.50	3.00	9.00	3.50	1.50	3.12
30"	1.00	7.00	5.25	3.50	10.50	4.75	1.50	4.33
36"	1.00	8.00	6.00	4.00	12.00	6.00	1.50	5.75
42"	1.00	9.00	6.75	4.50	13.50	7.25	1.50	7.37
48"	1.00	10.00	7.50	5.00	15.00	8.50	1.50	9.18
54"	1.00	11.00	8.25	5.50	16.50	9.75	1.50	11.19
60"	1.00	12.00	9.00	6.00	18.00	11.00	1.50	13.40
66"	1.00	13.00	9.75	6.50	19.50	12.25	1.50	15.81
72"	1.00	14.00	10.50	7.00	21.00	13.50	1.50	18.41
84"	1.00	16.00	12.00	8.00	24.00	16.00	1.50	24.22

DIMENSIONS FOR SLOPE OF 4:1

D	a (FT)	b (FT)	c (FT)	e (FT)	f (FT)	g (FT)	STONE DEPTH (FT)	STONE (CY)
12"	1.00	8.00	6.00	2.00	6.00	0.00	1.50	2.20
15"	1.00	9.00	6.75	2.25	6.75	0.00	1.50	2.80
18"	1.00	10.00	7.50	2.50	7.50	0.00	1.50	3.40
21"	1.00	11.00	8.25	2.75	8.25	0.00	1.50	4.10
24"	1.00	12.00	9.00	3.00	9.00	0.00	1.50	4.86
30"	1.00	14.00	10.50	3.50	10.50	0.00	1.50	6.58
36"	1.00	16.00	12.00	4.00	12.00	0.00	1.50	8.56
42"	1.00	18.00	13.50	4.50	13.50	0.50	1.50	10.92
48"	1.00	20.00	15.00	5.00	15.00	1.00	1.50	13.57
54"	1.00	22.00	16.50	5.50	16.50	1.50	1.50	16.50
60"	1.00	24.00	18.00	6.00	18.00	2.00	1.50	19.72
66"	1.00	26.00	19.50	6.50	19.50	2.50	1.50	23.22
72"	1.00	28.00	21.00	7.00	21.00	3.00	1.50	27.01
84"	1.00	32.00	24.00	8.00	24.00	4.00	1.50	35.45

DIMENSIONS FOR SLOPE OF 6:1

D	a (FT)	b (FT)	c (FT)	e (FT)	f (FT)	g (FT)	STONE DEPTH (FT)	STONE (CY)
12"	0.50	9.00	7.50	1.50	4.50	0.00	1.50	2.30
15"	0.50	10.50	8.75	1.75	5.50	0.00	1.50	2.93
18"	0.50	12.00	10.00	2.00	6.50	0.00	1.50	3.57
21"	0.50	13.50	11.25	2.25	7.25	0.00	1.50	4.46
24"	0.50	15.00	12.50	2.50	8.00	0.00	1.50	5.44
30"	0.50	18.00	15.00	3.00	9.50	0.00	1.50	7.71
36"	0.50	21.00	17.50	3.50	11.00	0.00	1.50	10.37
42"	0.50	24.00	20.00	4.00	12.50	0.00	1.50	13.42
48"	0.50	27.00	22.50	4.50	14.00	0.00	1.50	16.87
54"	0.50	30.00	25.00	5.00	15.50	0.00	1.50	20.70
60"	0.50	33.00	27.50	5.50	17.00	0.00	1.50	24.93
66"	0.50	36.00	30.00	6.00	18.50	0.00	1.50	29.55
72"	0.50	39.00	32.50	6.50	20.00	0.00	1.50	34.56
84"	0.50	45.00	37.50	7.50	23.00	0.00	1.50	45.76

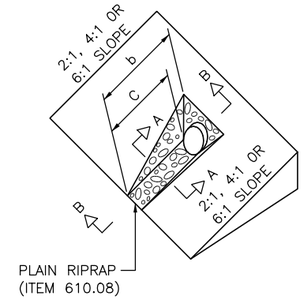

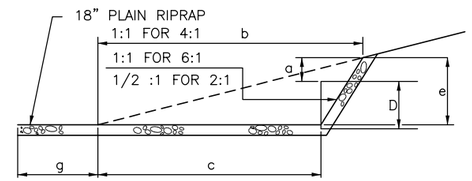

SECTION B-B

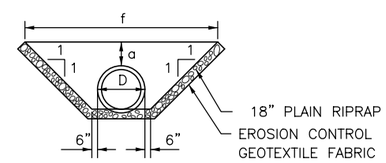

SECTION A-A

ROADWAY CULVERT END SLOPE TREATMENT

NOTES:

1. THE DIMENSIONS SHOWN ARE APPROXIMATE AND MAY BE MODIFIED BY THE ENGINEER.
2. STONE QUANTITIES ARE FOR ONE END OF THE PIPE.

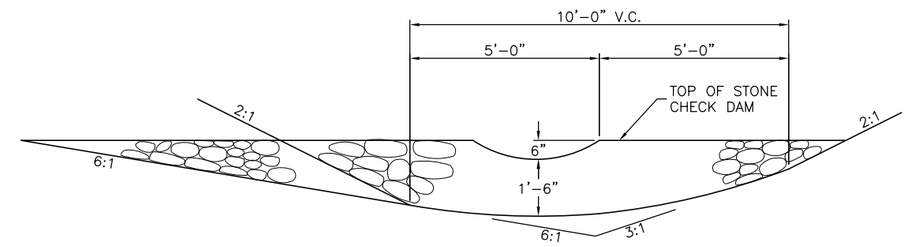

SECTION

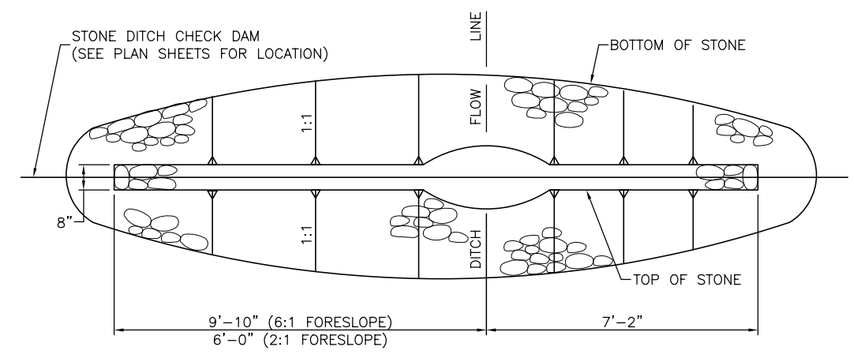

PLAN

STONE CHECK DAM

1" = 2-0"

FORESLOPE	BACKSLOPE	QUANTITY C.Y. STONE
6:1	3:1	2.5
2:1	3:1	2.0

NOTES:

1. STONE FOR TEMPORARY AND PERMANENT STONE CHECK DAMS SHALL MEET THE REQUIREMENTS OF MDOT SPECIFICATION 703.29, STONE DITCH PROTECTION.
2. TEMPORARY STONE CHECK DAMS WILL BE PAID FOR UNDER ITEM 610.181.
3. PERMANENT STONE CHECK DAMS WILL BE PAID FOR UNDER ITEM 610.182.

Date:1/23/2015

Filename: 012_ErosionControl.dgn

Scale:

No.	Revision	By	Date

Designed by:

HNTB

CONSULTANT PROJECT MANAGER: Craig R. Morin, P.E.

	By	Date		By	Date
Designed	CAH	01/15	Checked	CRM	01/15
Drawn	MPC	01/15	In Charge of	RAL	01/15

HNTB CORPORATION
340 County Road, Suite 6-C
Westbrook, ME 04092
TEL (207) 774-5155
FAX (207) 228-0909

MAINE TURNPIKE

THE GOLD STAR MEMORIAL HIGHWAY

MTA PROJECT MANAGER: Ralph C. Norwood, IV, P.E., P.T.O.E.

BRIDGE REPAIRS
PAVEMENT REHABILITATION

EROSION CONTROL DETAILS

SHEET NUMBER: MD-04

CONTRACT:2015.03

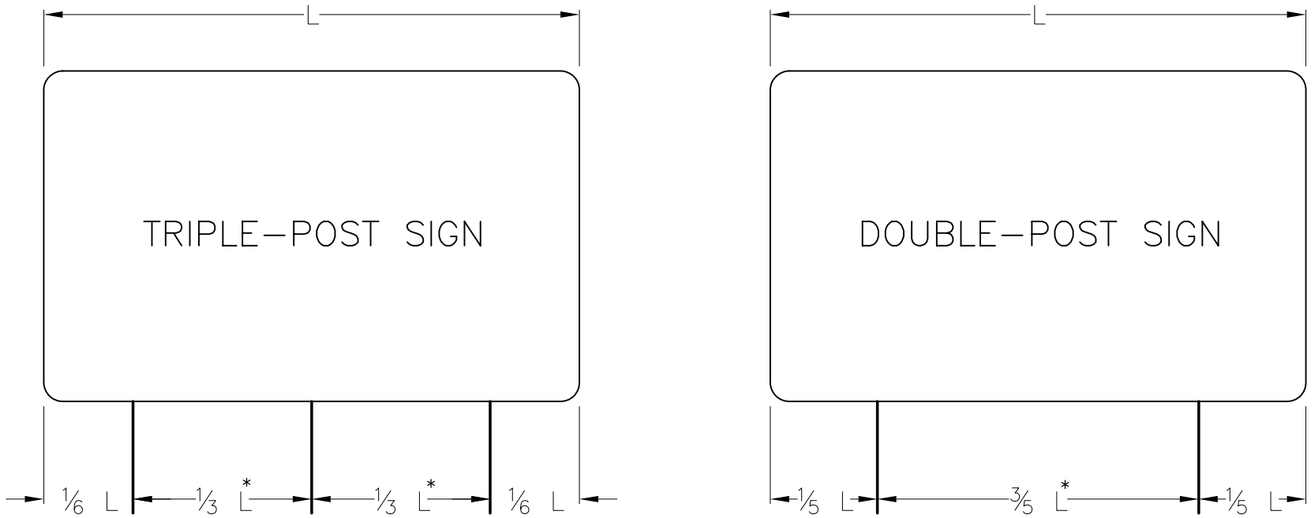

POLE SPACING DETAIL

N.T.S.

* – A MINIMUM 7 FEET REQUIRED WHEN INSTALLED ON BREAKAWAY DEVICES

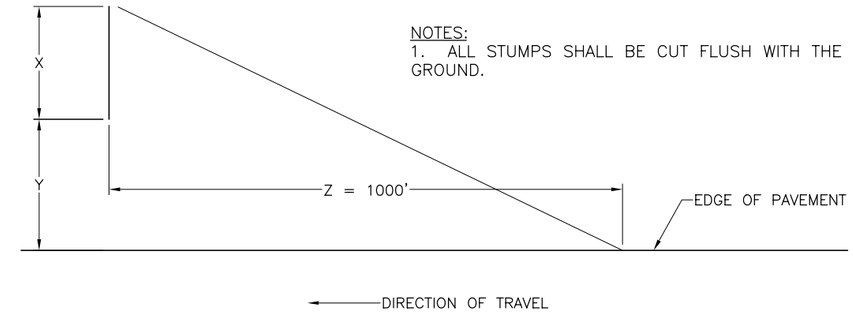

NOTES:
1. ALL STUMPS SHALL BE CUT FLUSH WITH THE GROUND.

WHERE:

X = WIDTH OF SIGN + 10'
Y = OFFSET TO EDGE OF SIGN FROM EDGE OF PAVEMENT
Z = DISTANCE FROM FACE OF SIGN TO A POINT ON THE EDGE OF PAVEMENT 1000' BACK

CLEARING DETAIL FOR MAINLINE SIGN INSTALLATION

NO SCALE

SINGLE SUPPORT SIGNS								
FOUNDATION DIAMETER	SIGN AREA (A)	SIGN WIDTH (W)	POST SIZE	BASE PLATE (1) (3)	MATERIAL	ANCHOR BOLTS (2)	BOLT CIRCLE	MAXIMUM MOUNTING HEIGHT
	A < 4 FT^2		U CHANNEL POST					12 FEET TO SIGN CENTER
	4 < A <= 10 FT^2		WOOD POST 6"X6"					
18"	10 < A <= 16 FT^2	W=4'–0" MAX. BUT INCLUDES 5'–0" YIELD SIGN	W6X9	12"X12"X1" 41 LBS.	A36	1" ϕ X 3'-0"	12"	
18"	16 < A <= 25 FT^2	W=5'–0" MAX	W6X15	12"X12"X1" 41 LBS.	A36	1" ϕ X 3'-0"	12"	
24"	25 < A <= 42 FT^2	W=7'–0" MAX	W8X24	14"X14"X1" 55 LBS.	A36	1-1/4" ϕ X 3'-6"	14"	

MULTIPLE SUPPORT SIGNS								
24"	TO 60 FT^2/POST		W8X18	14"X14"X1" 55 LBS.	A36	1-1/4" ϕ X 3'-6"	14"	20 FEET TO SIGN CENTER
24"	60–85 FT^2/POST		W10X22	12"X17"X1–1/4" 72 LBS.	A36	1-1/4" ϕ X 3'-6"	15"	
30"	85–110 FT^2/POST		W12X26	13"X19"X1–1/4" 87 LBS.	A36	1-1/2" ϕ X 4'-0"	15"	
30"	110–135 FT^2/POST		W14X30	14"X21"X1–1/4" 104 LBS.	A36	1-1/2" ϕ X 4'-0"	19"	

GENERAL NOTES

1. BOLTS TO BE 50,000 PSI MINIMUM YIELD STRENGTH.

2. POST TO BASE PLATE WELD SHALL BE 5/16" FILLET WELD.

3. BASE PLATES AND H–BEAMS SHALL BE HOT DIPPED GALVANIZED AFTER FABRICATION IN ACCORDANCE WITH SECTION 720.06.

BREAKAWAY NOTES

1. ON 6"X6" WOOD POSTS, DRILL 3/4" DIAMETER HOLES AT RIGHT ANGLES TO ONE ANOTHER 4 INCHES ABOVE GROUND LEVEL TO MEET BREAKAWAY STANDARDS.

2. ON BREAKAWAY SUPPORTS, THE HINGE SHOULD BE A MINIMUM OF 7 FEET ABOVE THE FOUNDATION. NO PERMANENT SUPPLEMENTARY SIGNS SHALL BE ATTACHED BELOW THE HINGE.

3. A SINGLE POSTED SIGN REQUIRING A BREAKAWAY DEVICE SHALL NOT HAVE A HINGE.

REMOVE AND RESET GUIDE SIGN NOTES

1. EXISTING SIGN POST LENGTHS ARE APPROXIMATE AND SHALL BE FIELD VERIFIED BY THE CONTRACTOR IF THE POSTS ARE TO BE REUSED.

2. THE CONTRACTOR MAY REUSE EXISTING POLES, FOUNDATIONS AND BREAKAWAY DEVICES AT ANY SIGN LOCATION WHERE FEASIBLE.

3. PROPOSED POLE LENGTHS ARE MEASURED FROM THE TOP OF THE FOUNDATION TO THE TOP OF SIGN AND ARE APPROXIMATE. FINAL POST LENGTHS SHALL BE DETERMINED BY THE CONTRACTOR ONCE FOUNDATIONS ARE PLACED.

Date:1/23/2015

Filename: 013_Signing-Details.dgn

Scale:

No.	Revision	By	Date

Designed by: HNTB

CONSULTANT PROJECT MANAGER: R. Bruce Munger, P.E.

	By	Date		By	Date
Designed	TMH	01/15	Checked	CAH	01/15
Drawn	MPC	01/15	In Charge of	RAL	01/15

HNTB CORPORATION
340 County Road, Suite 6-C
Westbrook, ME 04092
TEL (207) 774-5155
FAX (207) 228-0909

MAINE TURNPIKE

THE GOLD STAR MEMORIAL HIGHWAY

MTA PROJECT MANAGER: Ralph C. Norwood, IV, P.E., P.T.O.E.

FALMOUTH SPUR BARRIER TOLL PLAZA ORT CONVERSION

SIGNING DETAILS

SHEET NUMBER: SDET-01

CONTRACT:2015.03

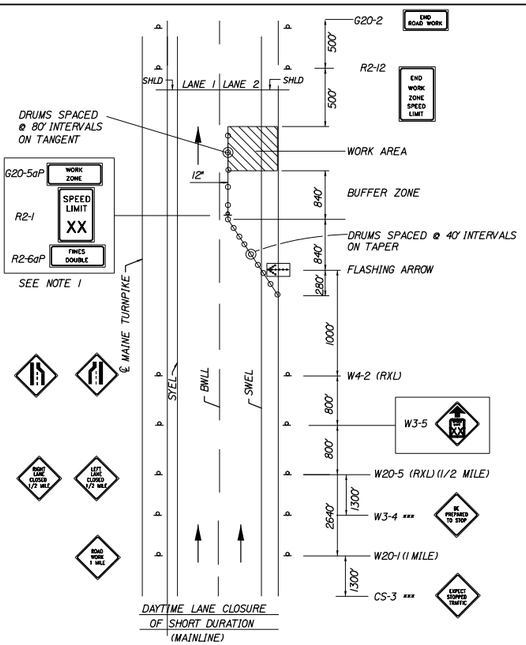

SINGLE LANE CLOSURE SIGNS ON EASELS

1. FOR EASEL SET UP ONLY. THIS SIGN IS NOT BRACKETED. ONE SIGN ASSEMBLY IS PLACED AT THE END OF THE TAPER .

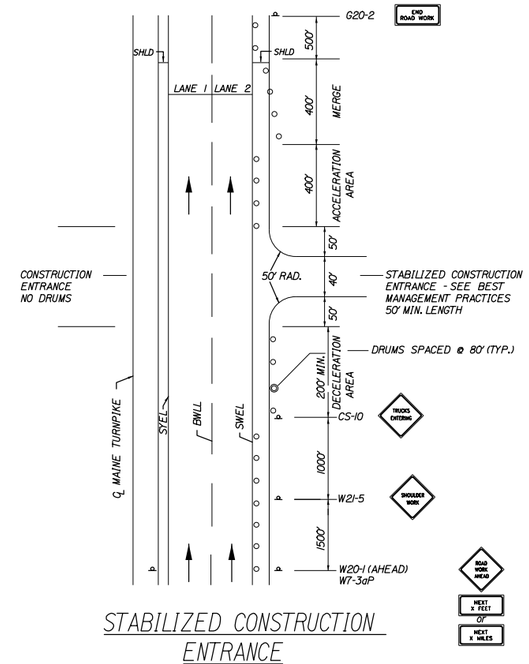

STABILIZED CONSTRUCTION ENTRANCE

1. SIGN G20-2 IS NOT REQUIRED IF ENTRANCE IS WITHIN THE WORK ZONE.

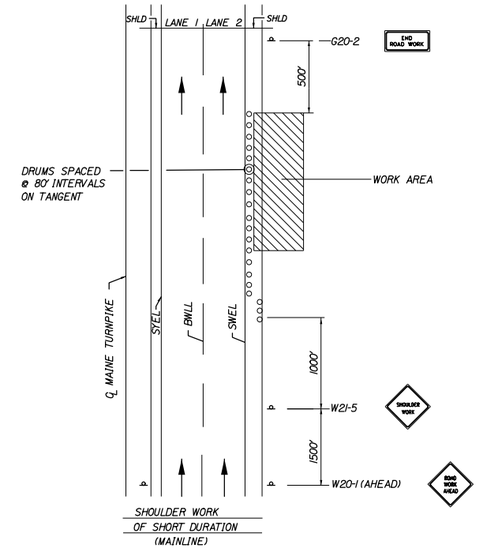

SHOULDER WORK

1. THE W20-1 AND G20-2 SIGNS ARE NOT REQUIRED IF THE SHOULDER CLOSURE IS WITHIN A PREVIOUSLY ESTABLISHED WORK ZONE.

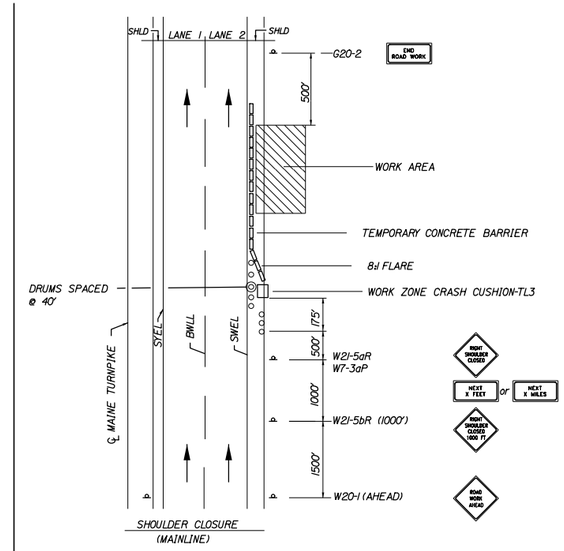

SHOULDER CLOSURE

1. THE W20-1 AND G20-2 SIGNS ARE NOT REQUIRED IF THE SHOULDER CLOSURE IS WITHIN A PREVIOUSLY ESTABLISHED WORK ZONE.

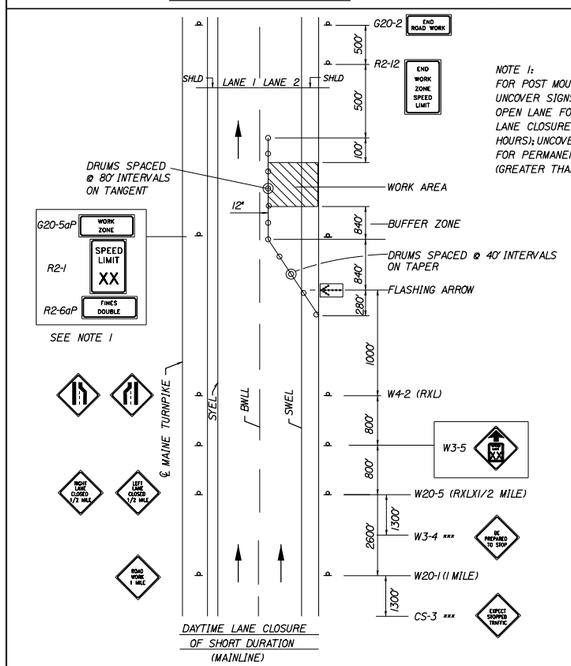

NOTE 1:
FOR POST MOUNTED SIGN SETUP UNCOVER SIGNS ADJACENT TO OPEN LANE FOR SHORT TERM LANE CLOSURE (LESS THAN 24 HOURS); UNCOVER BOTH SIGNS FOR PERMANENT LANE CLOSURE (GREATER THAN 24 HOURS).

SINGLE LANE CLOSURE - POST MOUNTED SIGN SETUP

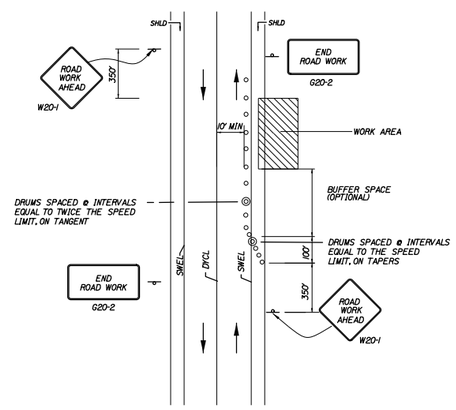

TEMP. LOCAL ROAD SHOULDER CLOSURE

NOTES:
1. FOR SHORT DURATION WORK (< 1 HOUR), THE TAPER AND CHANNELIZATION DEVICES MAY BE OMITTED IF SHADOW VEHICLE IS PRESENT WITH ACTIVATED HIGH-INTENSITY ROTATING, FLASHING, OSCILLATING OR STROBE LIGHTS.

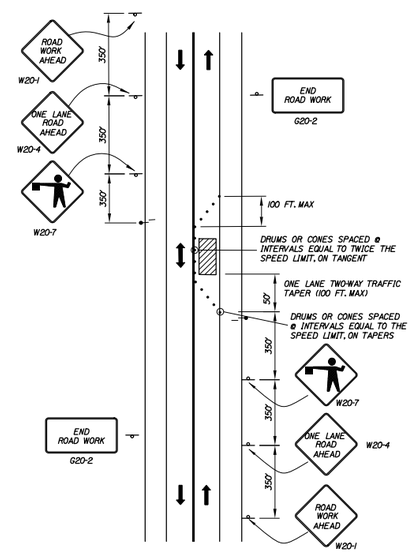

LOCAL ROAD SINGLE LANE CLOSURE

NOTES:
1. ROAD WORK AHEAD & END ROAD WORK SIGNS MAY BE OMITTED FOR SHORT DURATION OPERATIONS (LESS THAN 1 HOUR).
2. FLAGGERS SHALL BE LOCATED SO THEY ARE CLEARLY VISIBLE TO APPROACHING DRIVERS.
3. SIGN SPACING ASSUMES LOCAL ROAD SPEED IS 40 MPH OR LESS.

GENERAL MAINTENANCE OF TRAFFIC NOTES:

1. ALL PAVMENT STRIPING & SIGNING SHALL BE IN ACCORDANCE WITH THE "MANUAL ON UNIFORM TRAFFIC CONTROL DEVICES", U.S.D.O.T., F.H.W.A., LATEST EDITION.
2. THESE PLANS SHOW THE GENERAL CONDITION FOR TURNPIKE MAINLINE TRAFFIC CONTROL. DURING CONSTRUCTION, SLIGHT MODIFICATIONS IN CONSTRUCTION PROCEDURE MAY OCCUR AND MAY REQUIRE SOME MINOR ADJUSTMENTS TO BE MADE IN THE FIELD. ALL PROCEDURES MUST BE APPROVED BY THE RESIDENT.
3. THE CONTRACTOR SHALL REMOVE ALL PAVEMENT MARKINGS THAT CONFLICT WITH PROPOSED PAVEMENT MARKINGS IN ACCORDANCE WITH THE SPECIFICATIONS AND MUTCD. PAYMENT SHALL BE MADE UNDER ITEM 627.77 - REMOVING PAVEMENT MARKINGS.
4. EXPOSED BARRIER ENDS SHALL BE PROTECTED BY A WORK ZONE CRASH CUSHION. PAYMENT WILL BE UNDER ITEM 527.341 - WORK ZONE CRASH CUSHION - TL-3.

ABBREVIATIONS FOR ALL M.O.T. PLANS

BWLL = BROKEN WHITE LANE LINE
SWLL = SOLID WHITE LANE LINE
SYLL = SOLID YELLOW LANE LINE
TBWLL - TEMPORARY BROKEN WHITE LANE LINE
TSWLL = TEMPORARY SOLID WHITE LANE LINE
TSYLL = TEMPORARY SOLID YELLOW LANE LINE

Date:1/23/2015

Filename: 014_TCPDetailsO1.dgn

Scale:

No.	Revision	By	Date

Designed by:

HNTB

CONSULTANT PROJECT MANAGER: Craig R. Morin, P.E.

	By	Date		By	Date
Designed	CAH	01/15	Checked	CRM	01/15
Drawn	MPC	01/15	In Charge of	RAL	01/15

HNTB CORPORATION
340 County Road, Suite 6-C
Westbrook, ME 04092
TEL (207) 774-5155
FAX (207) 228-0909

MAINE TURNPIKE

THE GOLD STAR MEMORIAL HIGHWAY

MTA PROJECT MANAGER: Ralph C. Norwood, IV, P.E., P.T.O.E.

BRIDGE REPAIRS
PAVEMENT REHABILITATION

MAINTENANCE OF TRAFFIC DETAILS 1

SHEET NUMBER: MOT-01

CONTRACT:2015.03

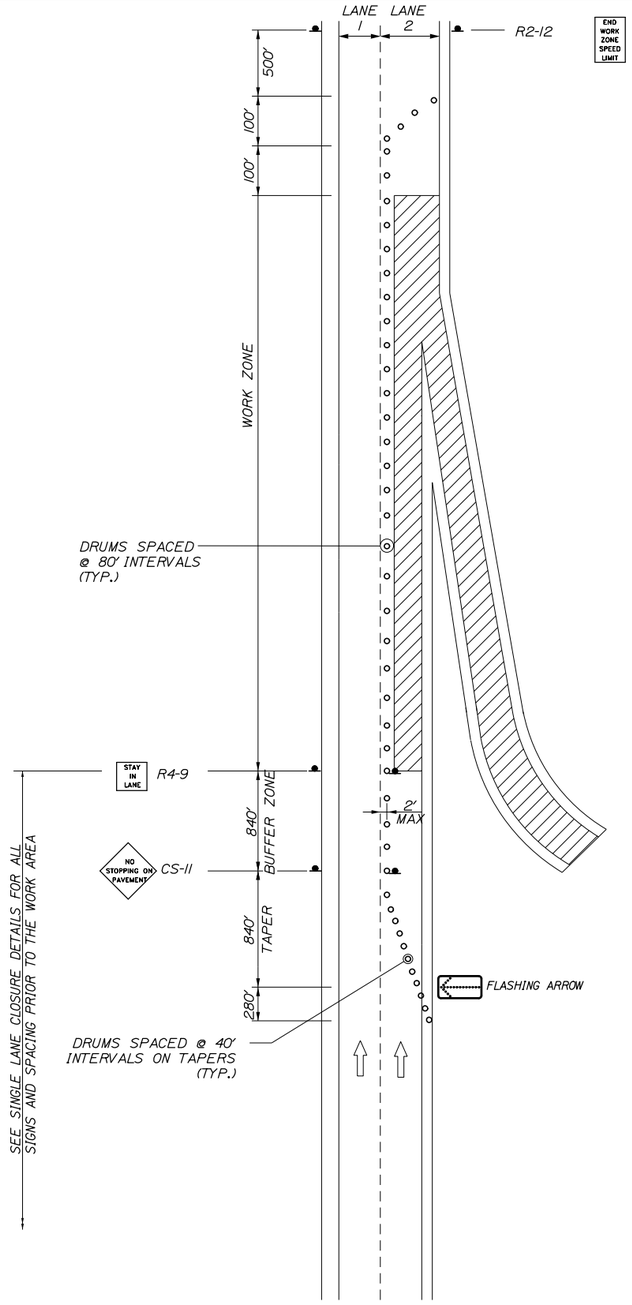

TRAVEL LANE CLOSURE
AT ON RAMP CLOSURE
(TWO LANE ROADWAY SHOWN)

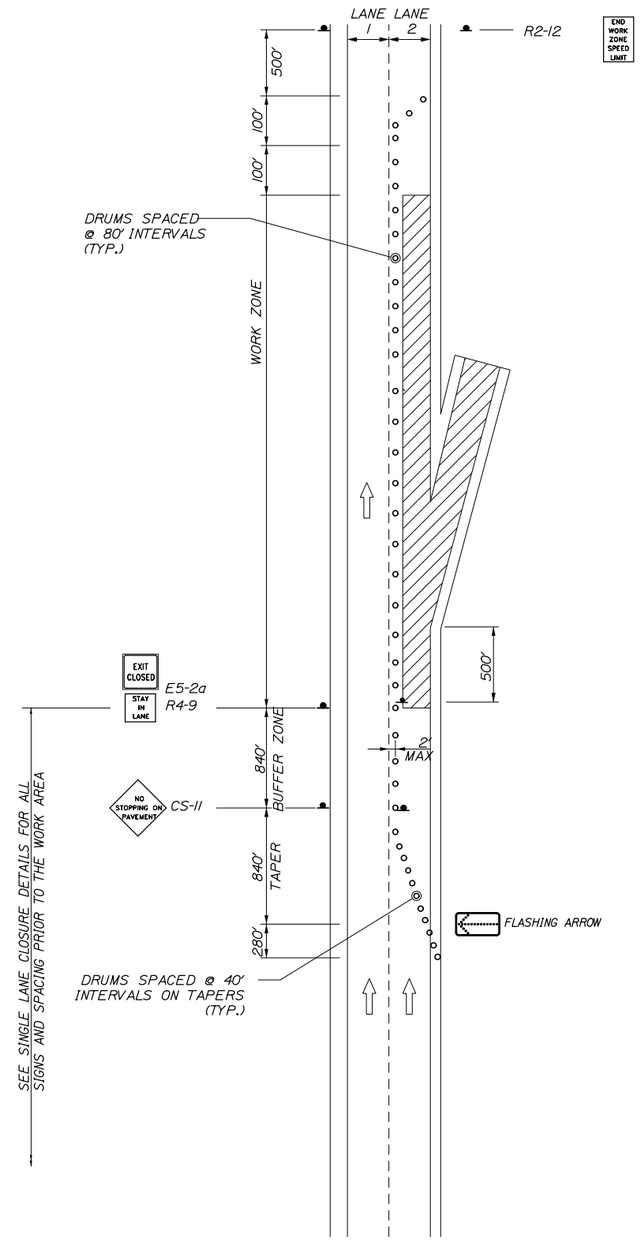

TRAVEL LANE CLOSURE
AT OFF RAMP CLOSURE
(TWO LANE ROADWAY SHOWN)

● = CONSTRUCTION SIGN

NOTES:

1. FOR SIGN DETAILS, SEE SIGN SUMMARY SHEETS.
2. ALL SIGNS ARE TO BE MOUNTED ON EASELS.
3. LANE CLOSURES AT ENTRANCE AND EXIT RAMPS MAY BE COMBINED IF APPROVED BY THE RESIDENT.

Date:1/23/2015

Filename: 015_TCPDetails02.dgn

Scale:

No.	Revision	By	Date

Designed by:

HNTB

CONSULTANT PROJECT MANAGER: Craig R. Morin, P.E.

	By	Date		By	Date
Designed	CAH	01/15	Checked	CRM	01/15
Drawn	MPC	01/15	In Charge of	RAL	01/15

HNTB CORPORATION
340 County Road, Suite 6-C
Westbrook, ME 04092
TEL (207) 774-5155
FAX (207) 228-0909

MAINE TURNPIKE

THE GOLD STAR MEMORIAL HIGHWAY

MTA PROJECT MANAGER: Ralph C. Norwood, IV, P.E., P.T.O.E.

BRIDGE REPAIRS
PAVEMENT REHABILITATION

MAINTENANCE OF TRAFFIC DETAILS II

SHEET NUMBER: MOT-02

CONTRACT:2015.03

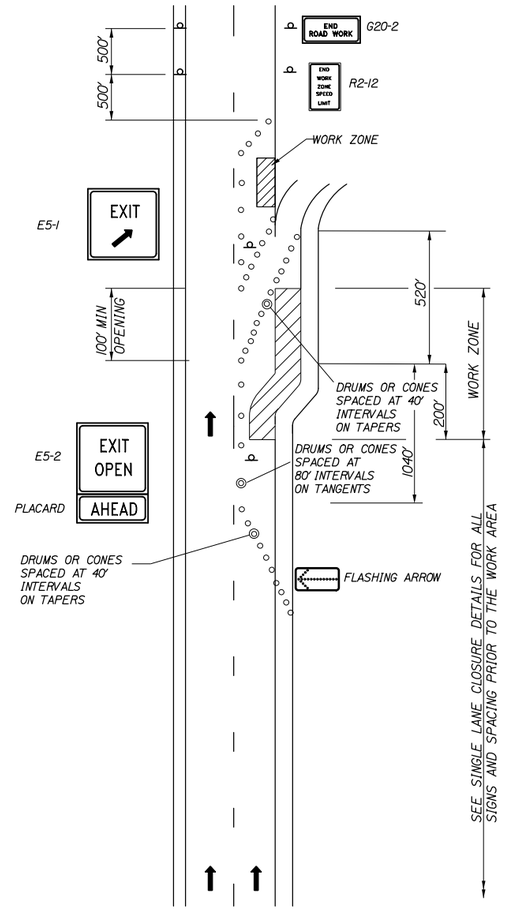

TRAVEL LANE CLOSURE AT AN EXIT RAMP
WITH RAMP OPEN

(TWO LANE ROADWAY SHOWN, THREE LANE ROADWAY SIMILAR)

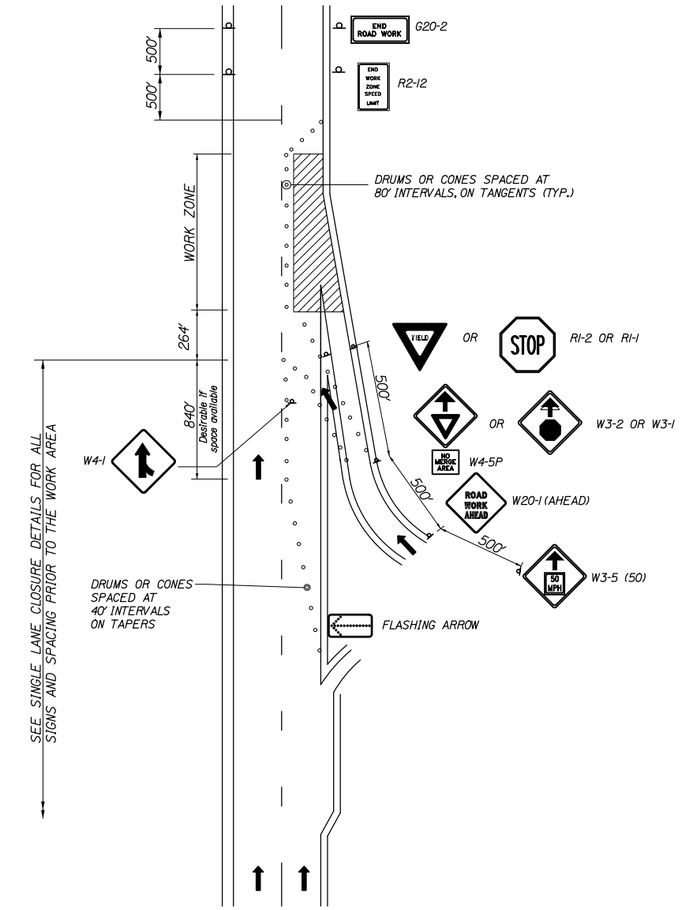

TRAVEL LANE CLOSURE AT AN ENTRANCE RAMP
WITH RAMP OPEN

(TWO LANE ROADWAY SHOWN, THREE LANE ROADWAY SIMILAR)

NOTES:

1. FOR SIGN DETAILS, SEE MAINTENANCE OF TRAFFIC SIGN SUMMARY SHEETS.

2. YIELD OR STOP CONDITION SHALL BE DETERMINED BY THE RESIDENT.

3. WHERE STOP SIGNS ARE USED, A TEMPORARY STOP LINE SHOULD BE PLACED ACROSS THE RAMP AT THE DESIRED STOP LOCATION.

LANE CLOSURES AT RAMPS
(MAINLINE)

Date:1/23/2015

Filename: 016_TCPDetails03.dgn

Scale:			
No.	Revision	By	Date

Designed by: HNTB

CONSULTANT PROJECT MANAGER: Craig R. Morin, P.E.

	By	Date		By	Date
Designed	CAH	01/15	Checked	CRM	01/15
Drawn	MPC	01/15	In Charge of	RAL	01/15

HNTB CORPORATION
340 County Road, Suite 6-C
Westbrook, ME 04092
TEL (207) 774-5155
FAX (207) 228-0909

MAINE TURNPIKE

THE GOLD STAR MEMORIAL HIGHWAY

MTA PROJECT MANAGER: Ralph C. Norwood, IV, P.E., P.T.O.E.

BRIDGE REPAIRS
PAVEMENT REHABILITATION

MAINTENANCE OF TRAFFIC DETAILS III

SHEET NUMBER: MOT-03

CONTRACT:2015.03

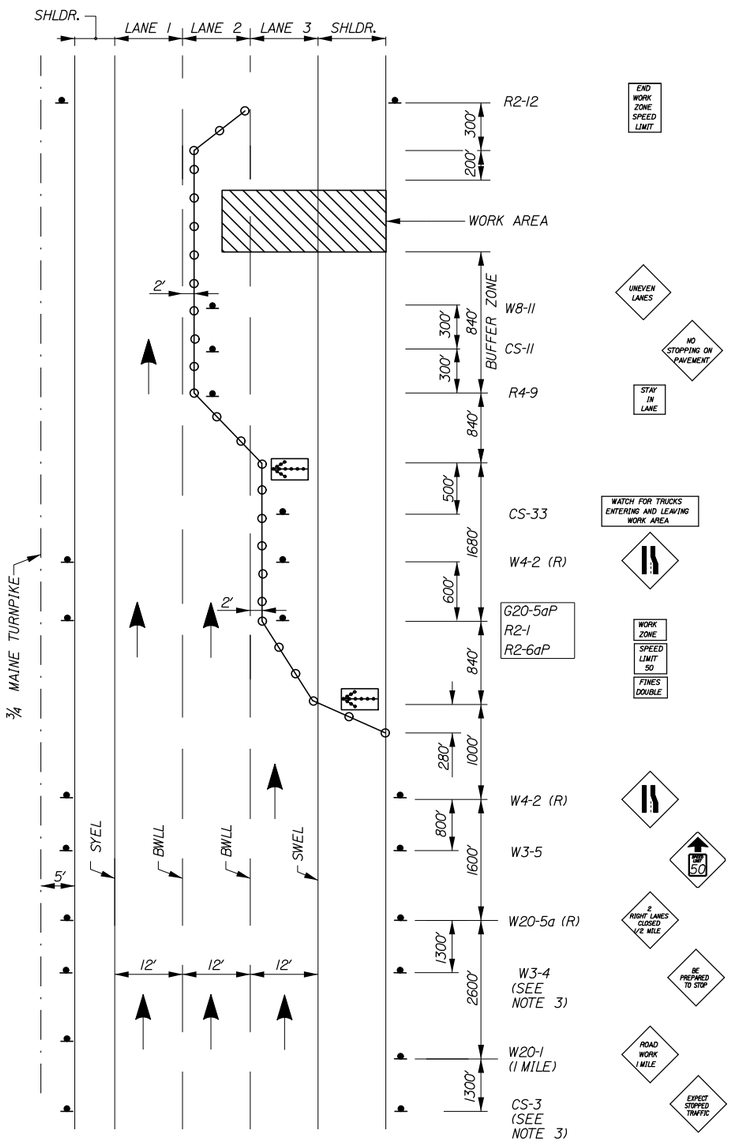

MAINLINE CLOSURE
PAVING - LANE 3

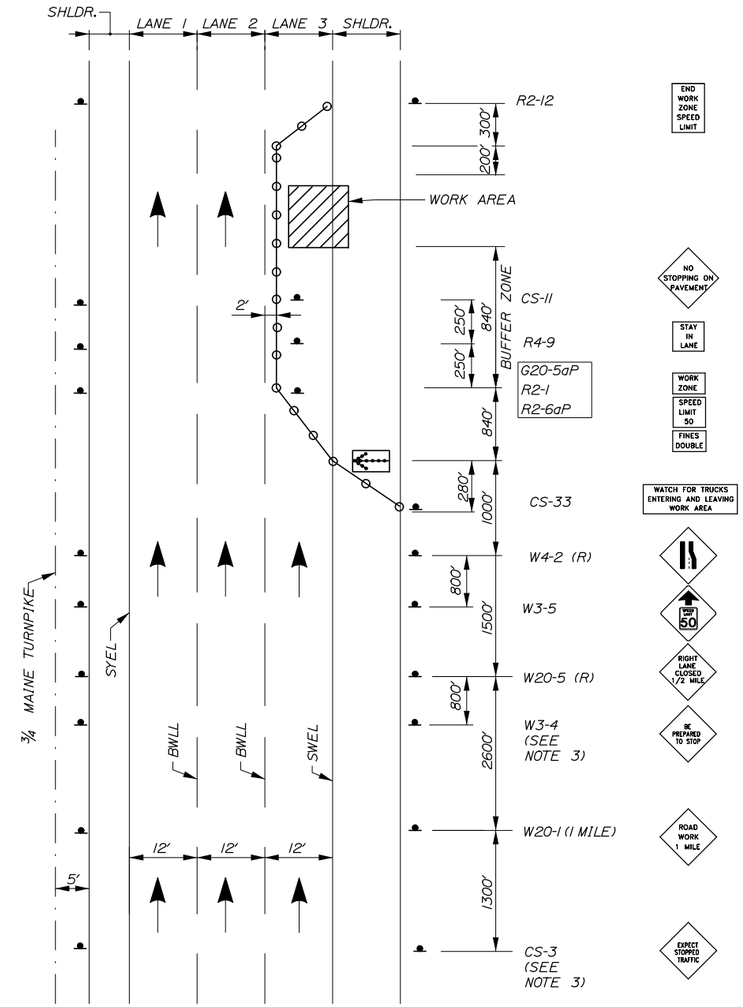

MAINLINE CLOSURE
SIGN WORK AND PAVEMENT
MARKINGS - LANE 3

LEGEND

= FLASHING ARROW BOARD

= CONSTRUCTION SIGN

= PORTABLE - CHANGEABLE MESSAGE SIGN

= DRUMS SPACED AT
80' INTERVALS ON TANGENTS
40' INTERVALS ON TAPERS

Date:1/23/2015

Filename: 017_TCPDetails04.dgn

Scale:

No.	Revision	By	Date

Designed by:

HNTB

CONSULTANT PROJECT MANAGER: Craig R. Morin, P.E.

	By	Date		By	Date
Designed	CAH	01/15	Checked	CRM	01/15
Drawn	MPC	01/15	In Charge of	RAL	01/15

HNTB CORPORATION
340 County Road, Suite 6-C
Westbrook, ME 04092
TEL (207) 774-5155
FAX (207) 228-0909

MAINE TURNPIKE

THE GOLD STAR MEMORIAL HIGHWAY

MTA PROJECT MANAGER: Ralph C. Norwood, IV, P.E., P.T.O.E.

BRIDGE REPAIRS
PAVEMENT REHABILITATION

MAINTENANCE OF TRAFFIC DETAILS IV

SHEET NUMBER: MOT-04

CONTRACT:2015.03

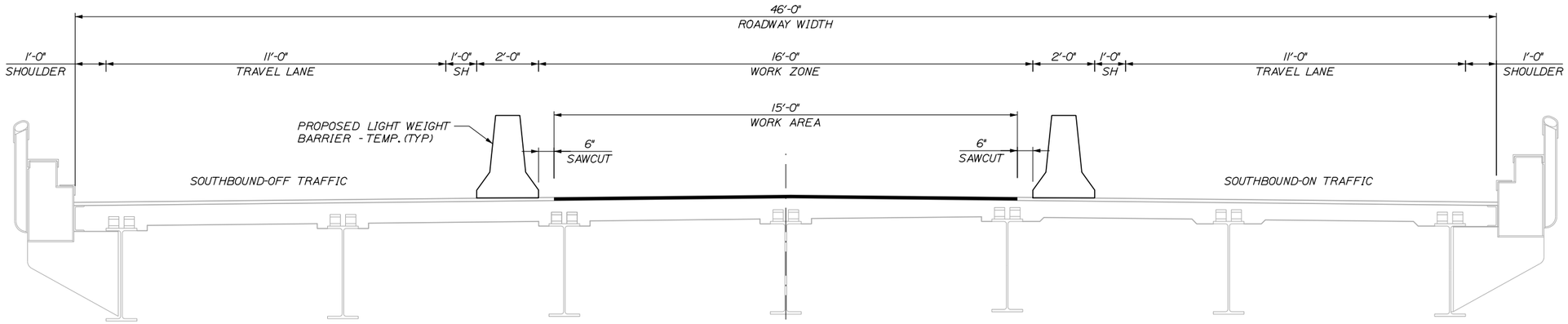

PHASE I CONSTRUCTION

1/2" = 1'-0"

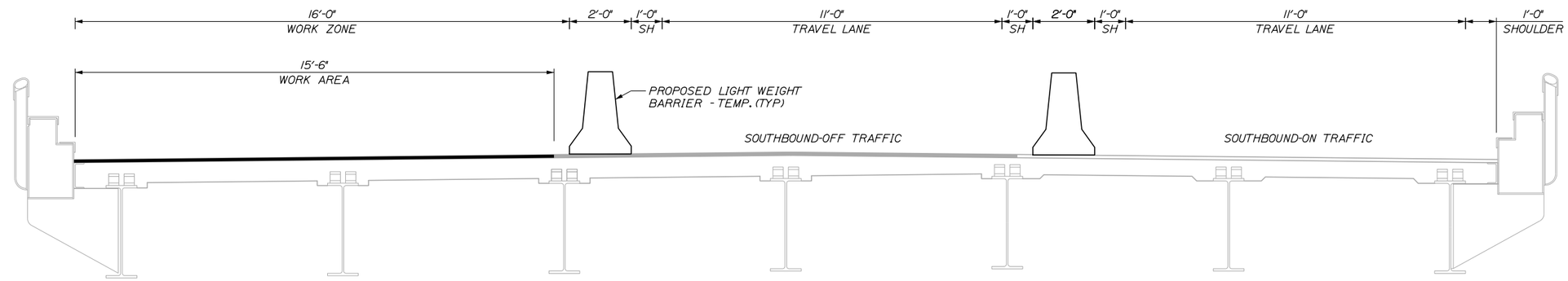

PHASE II CONSTRUCTION

1/2" = 1'-0"

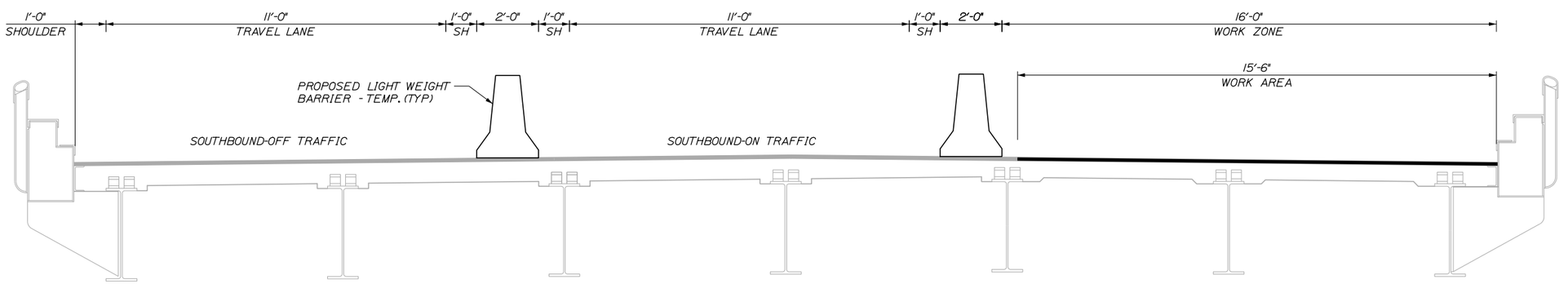

PHASE III CONSTRUCTION

1/2" = 1'-0"

Date:1/23/2015

Filename: 018_PhasingXsect01.dgn

Scale:

No.	Revision	By	Date

Designed by:

HNTB

CONSULTANT PROJECT MANAGER: Craig R. Morin, P.E.

	By	Date		By	Date
Designed	CAH	01/15	Checked	CRM	01/15
Drawn	MPC	01/15	In Charge of	RAL	01/15

HNTB CORPORATION
340 County Road, Suite 6-C
Westbrook, ME 04092
TEL (207) 774-5155
FAX (207) 228-0909

MAINE TURNPIKE

THE GOLD STAR MEMORIAL HIGHWAY

MTA PROJECT MANAGER: Ralph C. Norwood, IV, P.E., P.T.O.E.

BRIDGE REPAIRS
PAVEMENT REHABILITATION
EXIT 45 BRIDGE
CONSTRUCTION PHASING

SHEET NUMBER: MOT-05

CONTRACT:2015.03

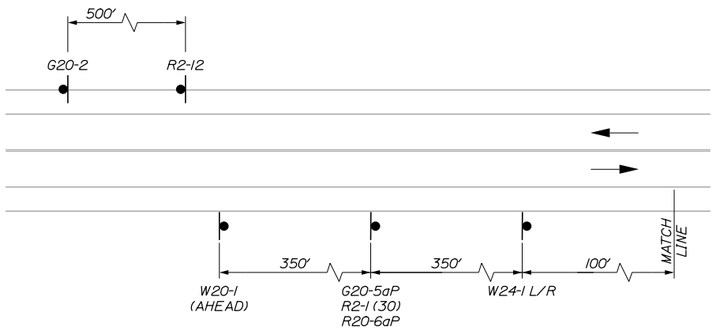

APPROACH SIGNING
N.T.S.

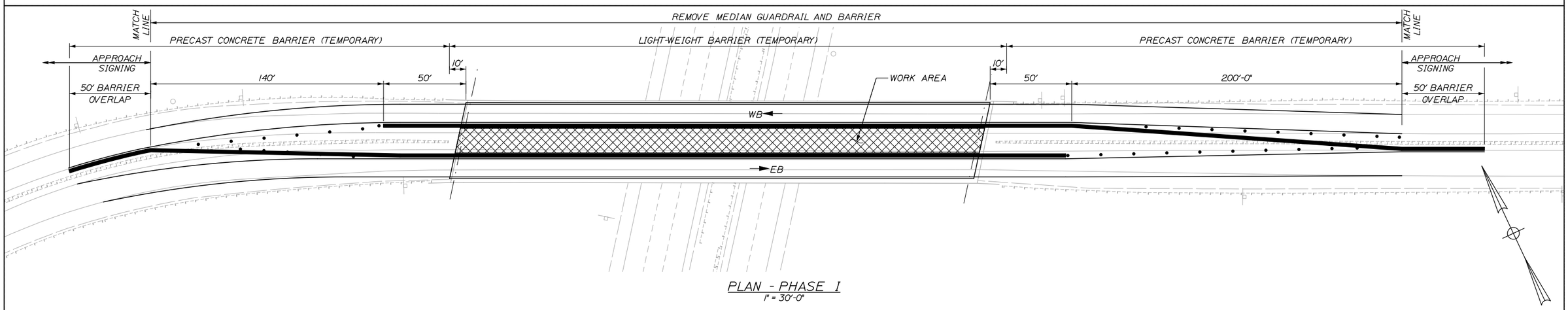

PLAN - PHASE I
1" = 30'-0"

NOTES:

1. THESE NOTES APPLY TO ALL THREE PHASES SHOWN HEREIN.
2. THE TEMPORARY BARRIER USED ON THE BRIDGE SHALL BE LIGHT-WEIGHT BARRIER. THE CONTRACTOR SHALL USE TEMPORARY CONCRETE BARRIER ON APPROACHES. THE TRANSITION ATTACHMENT FROM LIGHT-WEIGHT BARRIER TO CONCRETE BARRIER SHALL MEET THE REQUIREMENTS OF THE LIGHT-WEIGHT BARRIER MANUFACTURER TYPICAL DETAILS.
3. ANCHORAGE TO BRIDGE DECK DURING TEMPORARY WORKS SHALL BE PER MANUFACTURER REQUIREMENTS TO ENSURE A SAFE WORK ZONE. CONTRACTOR SHALL MINIMIZE THE AMOUNT OF ANCHORING PERFORMED ON NEW MEMBRANE AND PAVEMENT TO THE EXTENT POSSIBLE.
4. THE BARRIER LAYOUT FOR EACH PHASE SHALL BE SUBMITTED FOR REVIEW PRIOR TO CONSTRUCTION.
5. ALL OFF DECK TEMPORARY LINE WORK AND ALL TEMPORARY LINE WORK ON NEW DECK PAVEMENT SHALL BE TEMPORARY TAPE.
6. EXISTING OFF DECK PAVEMENT MARKINGS REQUIRING REMOVAL SHALL BE "REMOVED" WITH BLACK TAPE.

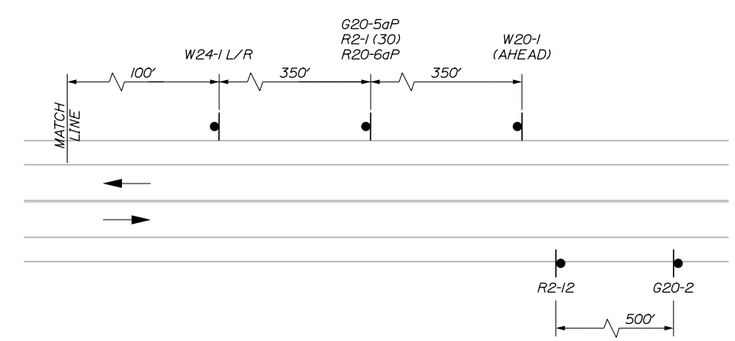

APPROACH SIGNING
N.T.S.

Scale:

No.	Revision	By	Date

Designed by:

HNTB

CONSULTANT PROJECT MANAGER: Craig R. Morin, P.E.

	By	Date		By	Date
Designed	CAH	01/15	Checked	CRM	01/15
Drawn	MPC	01/15	In Charge of	RAL	01/15

HNTB CORPORATION
340 County Road, Suite 6-C
Westbrook, ME 04092
TEL (207) 774-5155
FAX (207) 228-0909

MAINE TURNPIKE

THE GOLD STAR MEMORIAL HIGHWAY

MTA PROJECT MANAGER: Ralph C. Norwood, IV, P.E., P.T.O.E.

BRIDGE REPAIRS
PAVEMENT REHABILITATION
EXIT 45 BRIDGE
MAINTENANCE OF TRAFFIC

SHEET NUMBER: MOT-06

CONTRACT:2015.03

Date:1/23/2015

Filename: 019_MOTExit45-1.dgn

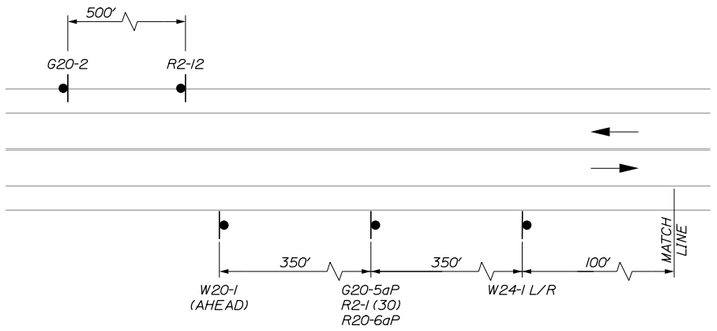

APPROACH SIGNING
N.T.S.

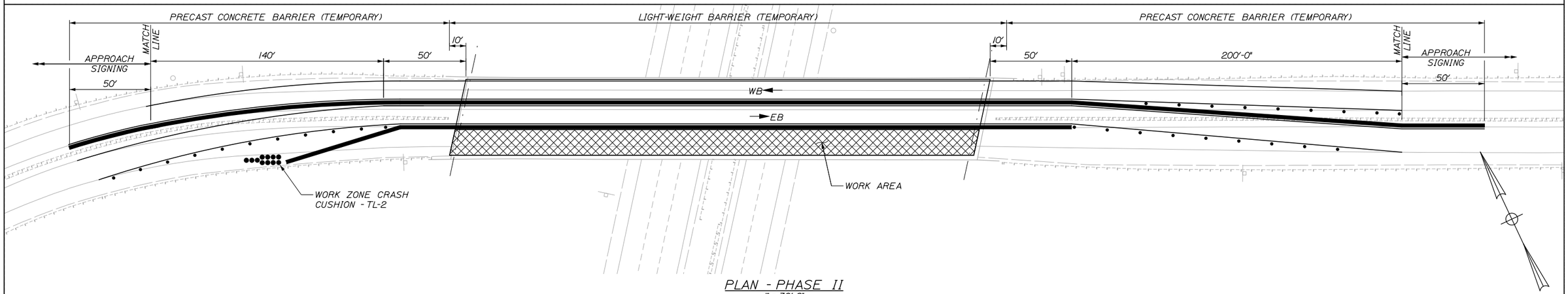

PLAN - PHASE II
1" = 30'-0"

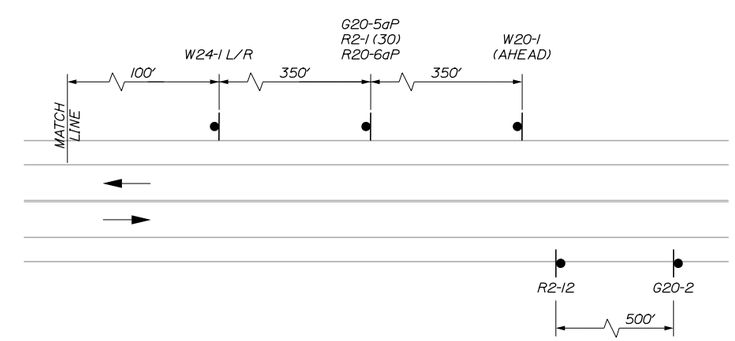

APPROACH SIGNING
N.T.S.

Date:1/23/2015

Filename: 020_MOTExit45-2.dgn

Scale:

No.	Revision	By	Date

Designed by:

HNTB

CONSULTANT PROJECT MANAGER: Craig R. Morin, P.E.

	By	Date		By	Date
Designed	CAH	01/15	Checked	CRM	01/15
Drawn	MPC	01/15	In Charge of	RAL	01/15

HNTB CORPORATION
340 County Road, Suite 6-C
Westbrook, ME 04092
TEL (207) 774-5155
FAX (207) 228-0909

MAINE TURNPIKE

THE GOLD STAR MEMORIAL HIGHWAY

MTA PROJECT MANAGER: Ralph C. Norwood, IV, P.E., P.T.O.E.

BRIDGE REPAIRS
PAVEMENT REHABILITATION
EXIT 45 BRIDGE
MAINTENANCE OF TRAFFIC

SHEET NUMBER: MOT-07

CONTRACT:2015.03

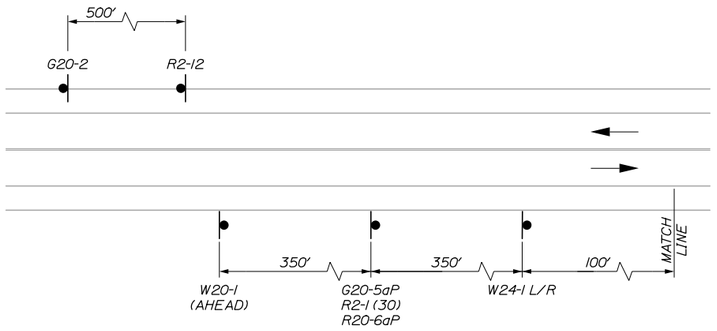

APPROACH SIGNING
N.T.S.

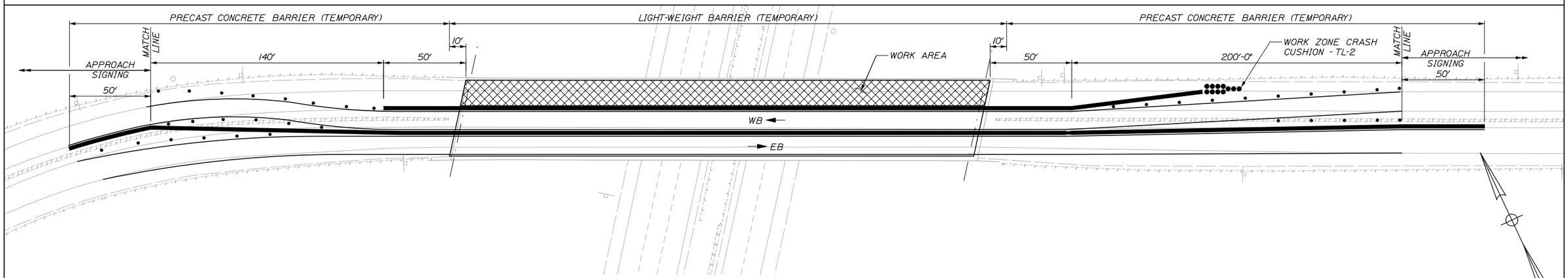

PLAN - PHASE III
1" = 30'-0"

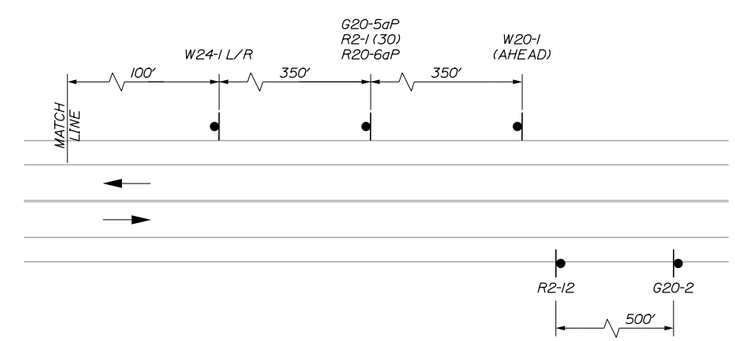

APPROACH SIGNING
N.T.S.

Date:1/23/2015

Filename: 021_MOTExit45-3.dgn

Scale:

No.	Revision	By	Date

Designed by:

HNTB

CONSULTANT PROJECT MANAGER: Craig R. Morin, P.E.

	By	Date		By	Date
Designed	CAH	01/15	Checked	CRM	01/15
Drawn	MPC	01/15	In Charge of	RAL	01/15

HNTB CORPORATION
340 County Road, Suite 6-C
Westbrook, ME 04092
TEL (207) 774-5155
FAX (207) 228-0909

MAINE TURNPIKE

THE GOLD STAR MEMORIAL HIGHWAY

MTA PROJECT MANAGER: Ralph C. Norwood, IV, P.E., P.T.O.E.

BRIDGE REPAIRS
PAVEMENT REHABILITATION
EXIT 45 BRIDGE
MAINTENANCE OF TRAFFIC

SHEET NUMBER: MOT-08

CONTRACT:2015.03

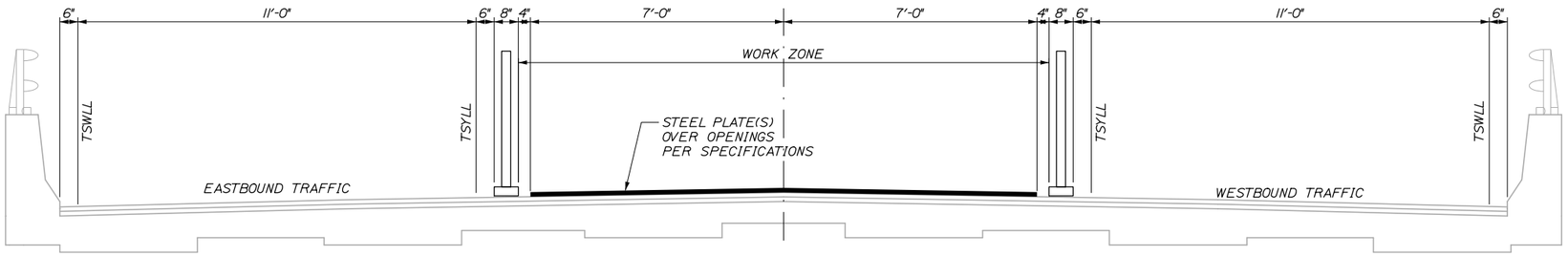

PHASE I - APPROACH SLAB AND PARAPET REPAIRS

1/2" = 1'-0"

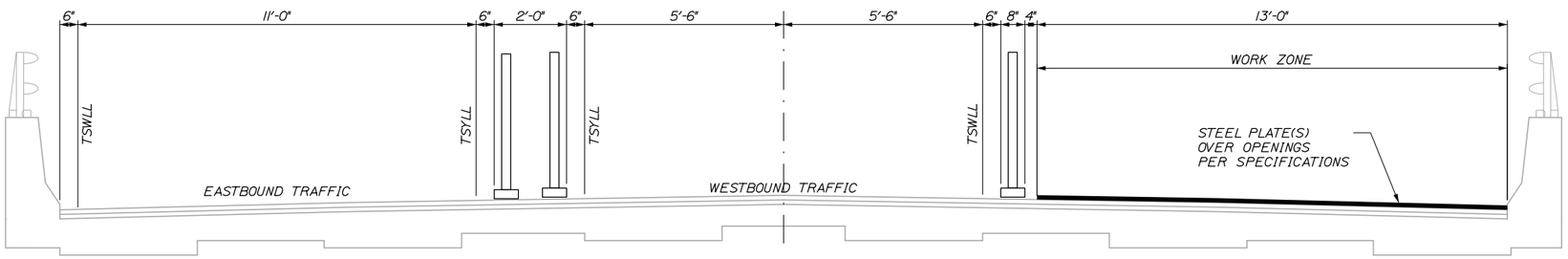

PHASE II - APPROACH SLAB AND PARAPET REPAIRS

1/2" = 1'-0"

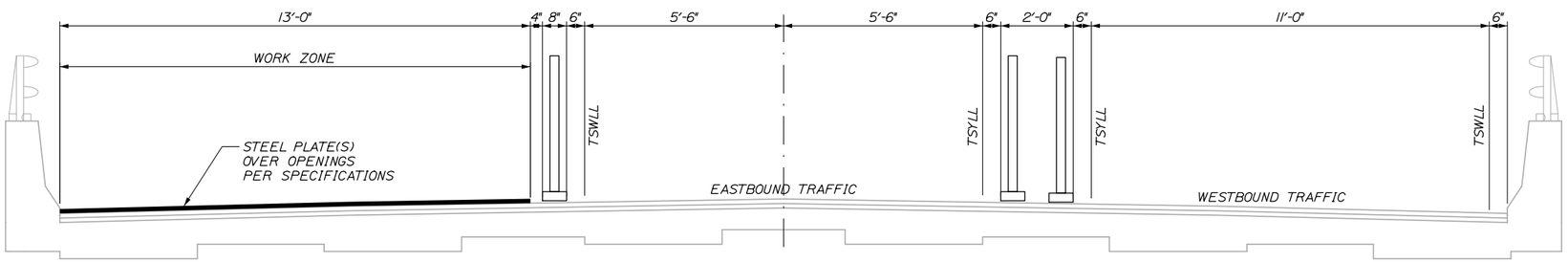

PHASE III - APPROACH SLAB AND PARAPET REPAIRS

1/2" = 1'-0"

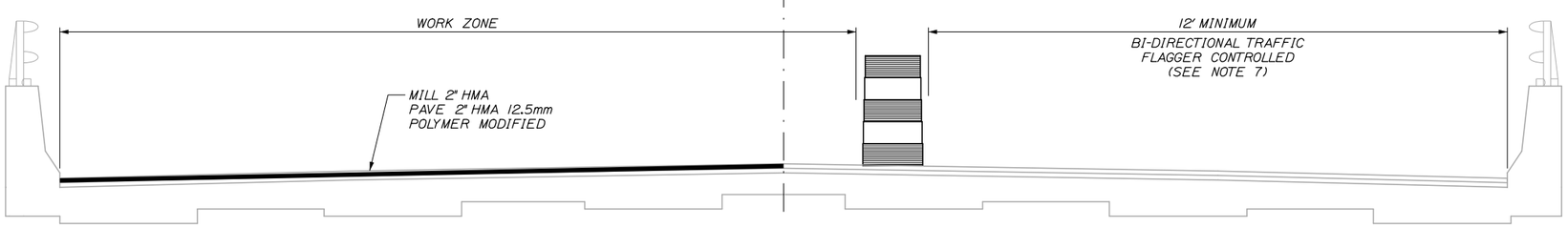

MILLING AND PAVING

1/2" = 1'-0"

NOTES:

1. PHASE I, II AND III APPROACH SLAB AND PARAPET REPAIRS SHALL BE UNDERTAKEN AT NIGHT TO MINIMIZE IMPACT ON THE SKYWAY DRIVE BRIDGE TRAFFIC.

2. PHASE I, II AND III APPROACH SLAB AND PARAPET REPAIRS SHALL BE COMPLETED PRIOR TO THE MILLING AND PAVING OF THE SKYWAY DRIVE BRIDGE AND APPROACHES.

3. AT THE END OF EACH WORK SHIFT ANY OPEN APPROACH SLAB AREA SHALL BE STEEL PLATED PER THE SPECIFICATION SO PEDESTRIANS AND VEHICLES CANNOT FALL INTO THE OPENING(S).

4. PARAPET REPAIRS SHALL ONLY OCCUR OVER CLOSED TRAVEL LANES OR SHOULDERS. SEE THE SPECIFICATIONS FOR PERMITTED TRAVEL LANE AND SHOULDER CLOSURE HOURS.

5. THE SKYWAY DRIVE BRIDGE APPROACHES SHALL BE MILLED AND SHIMMED AS REQUESTED BY THE RESIDENT PRIOR TO THE MILLING AND PAVING OF THE SKYWAY DRIVE BRIDGE AND THE APPROACH SURFACE LIFT.

6. THE MILLING AND PAVING OF THE SKYWAY DRIVE BRIDGE AND APPROACHES, INCLUDING THE MILLING AND SHIMMING OF THE APPROACHES, SHALL BE UNDERTAKEN AT NIGHT WITH FLAGGERS CONTROLLING BI-DIRECTIONAL TRAFFIC. SEE THE SPECIFICATION FOR PERMITTED FLAGGER CONTROLLED WORK HOURS.

7. SEE MUTCD TYPICAL APPLICATION 10 (TA-10) FOR FLAGGER CONTROLLED MAINTENANCE OF TRAFFIC CONTROL REQUIREMENTS.

8. ALL OFF DECK TEMPORARY LINE WORK AND ALL TEMPORARY LINE WORK ON NEW DECK PAVEMENT SHALL BE TEMPORARY TAPE.

9. EXISTING OFF DECK PAVEMENT MARKINGS REQUIRING REMOVAL SHALL BE "REMOVED" WITH BLACK TAPE.

Scale:

No.	Revision	By	Date

Designed by:

HNTB

CONSULTANT PROJECT MANAGER: Craig R. Morin, P.E.

	By	Date		By	Date
Designed	CAH	01/15	Checked	CRM	01/15
Drawn	MPC	01/15	In Charge of	RAL	01/15

HNTB CORPORATION
340 County Road, Suite 6-C
Westbrook, ME 04092
TEL (207) 774-5155
FAX (207) 228-0909

MAINE TURNPIKE

THE GOLD STAR MEMORIAL HIGHWAY

MTA PROJECT MANAGER: Ralph C. Norwood, IV, P.E., P.T.O.E.

BRIDGE REPAIRS
PAVEMENT REHABILITATION

EXIT 46 BRIDGE
CONSTRUCTION PHASING

SHEET NUMBER: MOT-09

CONTRACT:2015.03

Date:1/23/2015

Filename: 022_PhasingXsect01.dgn

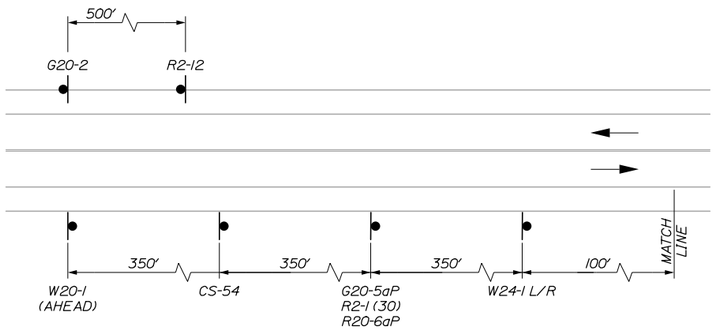

APPROACH SIGNING
N.T.S.

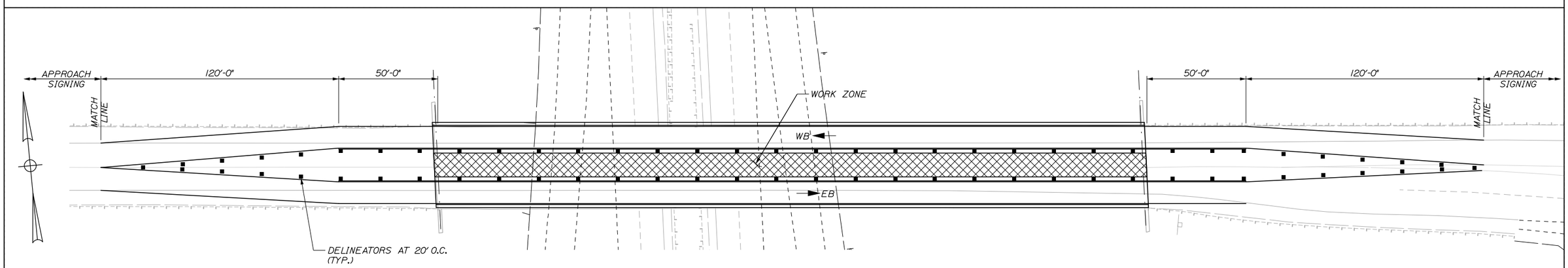

PLAN - PHASE I
1" = 25'-0"

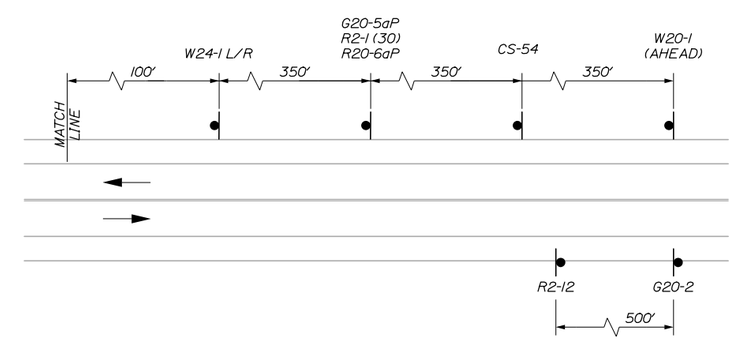

APPROACH SIGNING
N.T.S.

Date:1/23/2015

Filename: 023_MOTExit46-1.dgn

Scale:

No.	Revision	By	Date

Designed by:

HNTB

CONSULTANT PROJECT MANAGER: Craig R. Morin, P.E.

	By	Date		By	Date
Designed	CAH	01/15	Checked	CRM	01/15
Drawn	MPC	01/15	In Charge of	RAL	01/15

HNTB CORPORATION
340 County Road, Suite 6-C
Westbrook, ME 04092
TEL (207) 774-5155
FAX (207) 228-0909

MAINE TURNPIKE

THE GOLD STAR MEMORIAL HIGHWAY

MTA PROJECT MANAGER: Ralph C. Norwood, IV, P.E., P.T.O.E.

BRIDGE REPAIRS
PAVEMENT REHABILITATION
EXIT 46 BRIDGE
MAINTENANCE OF TRAFFIC

SHEET NUMBER: MOT-10

CONTRACT:2015.03

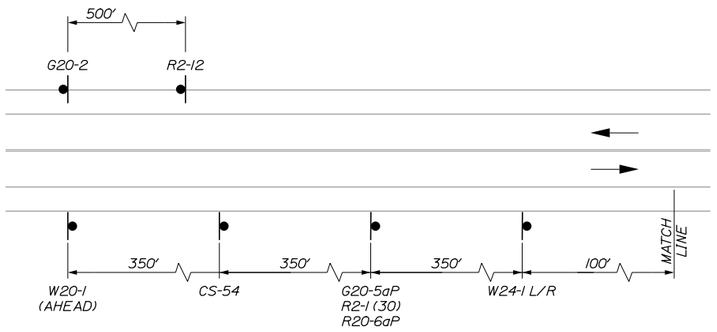

APPROACH SIGNING
N.T.S.

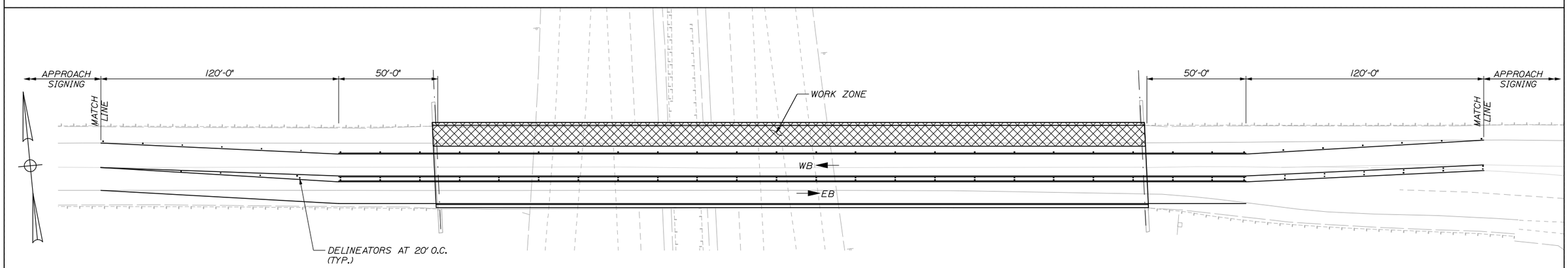

PLAN - PHASE II
1" = 25'-0"

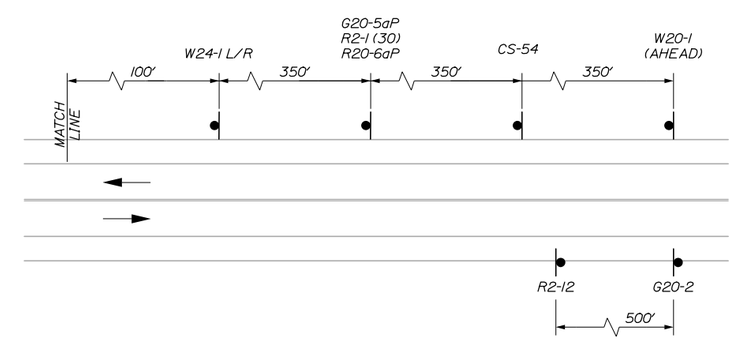

APPROACH SIGNING
N.T.S.

Date:1/23/2015

Filename: 024_MOTExit46-2.dgn

Scale:

No.	Revision	By	Date

Designed by:

HNTB

CONSULTANT PROJECT MANAGER: Craig R. Morin, P.E.

	By	Date		By	Date
Designed	CAH	01/15	Checked	CRM	01/15
Drawn	MPC	01/15	In Charge of	RAL	01/15

HNTB CORPORATION
340 County Road, Suite 6-C
Westbrook, ME 04092
TEL (207) 774-5155
FAX (207) 228-0909

MAINE TURNPIKE

THE GOLD STAR MEMORIAL HIGHWAY

MTA PROJECT MANAGER: Ralph C. Norwood, IV, P.E., P.T.O.E.

BRIDGE REPAIRS
PAVEMENT REHABILITATION
EXIT 46 BRIDGE
MAINTENANCE OF TRAFFIC

SHEET NUMBER: MOT-11

CONTRACT:2015.03

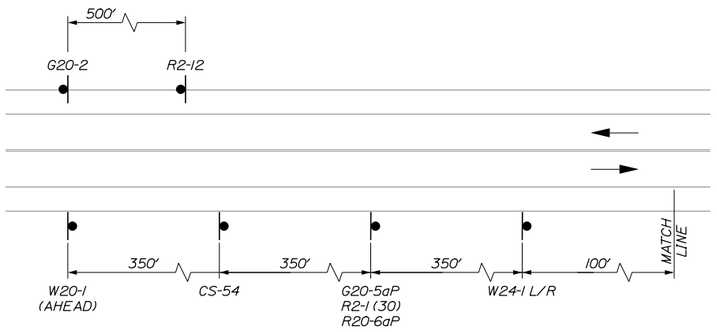

APPROACH SIGNING
N.T.S.

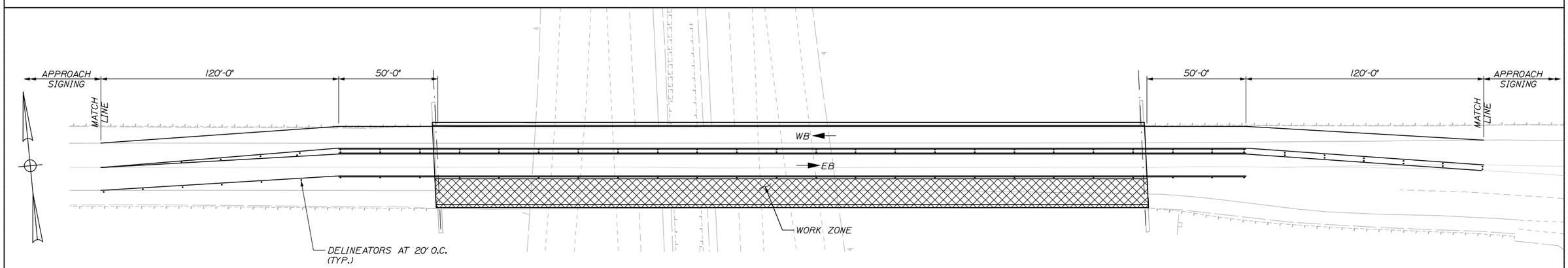

PLAN - PHASE III
1" = 25'-0"

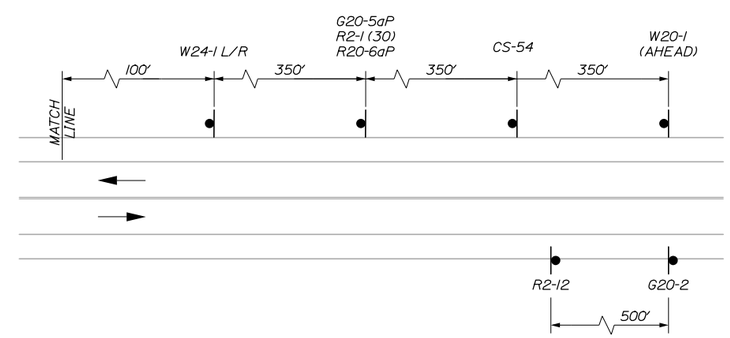

APPROACH SIGNING
N.T.S.

Date:1/23/2015

Filename: 025_MOTExit46-3.dgn

Scale:

No.	Revision	By	Date

Designed by:

HNTB

CONSULTANT PROJECT MANAGER: Craig R. Morin, P.E.

	By	Date		By	Date
Designed	CAH	01/15	Checked	CRM	01/15
Drawn	MPC	01/15	In Charge of	RAL	01/15

HNTB CORPORATION
340 County Road, Suite 6-C
Westbrook, ME 04092
TEL (207) 774-5155
FAX (207) 228-0909

MAINE TURNPIKE

THE GOLD STAR MEMORIAL HIGHWAY

MTA PROJECT MANAGER: Ralph C. Norwood, IV, P.E., P.T.O.E.

BRIDGE REPAIRS
PAVEMENT REHABILITATION
EXIT 46 BRIDGE
MAINTENANCE OF TRAFFIC

SHEET NUMBER: MOT-12

CONTRACT:2015.03

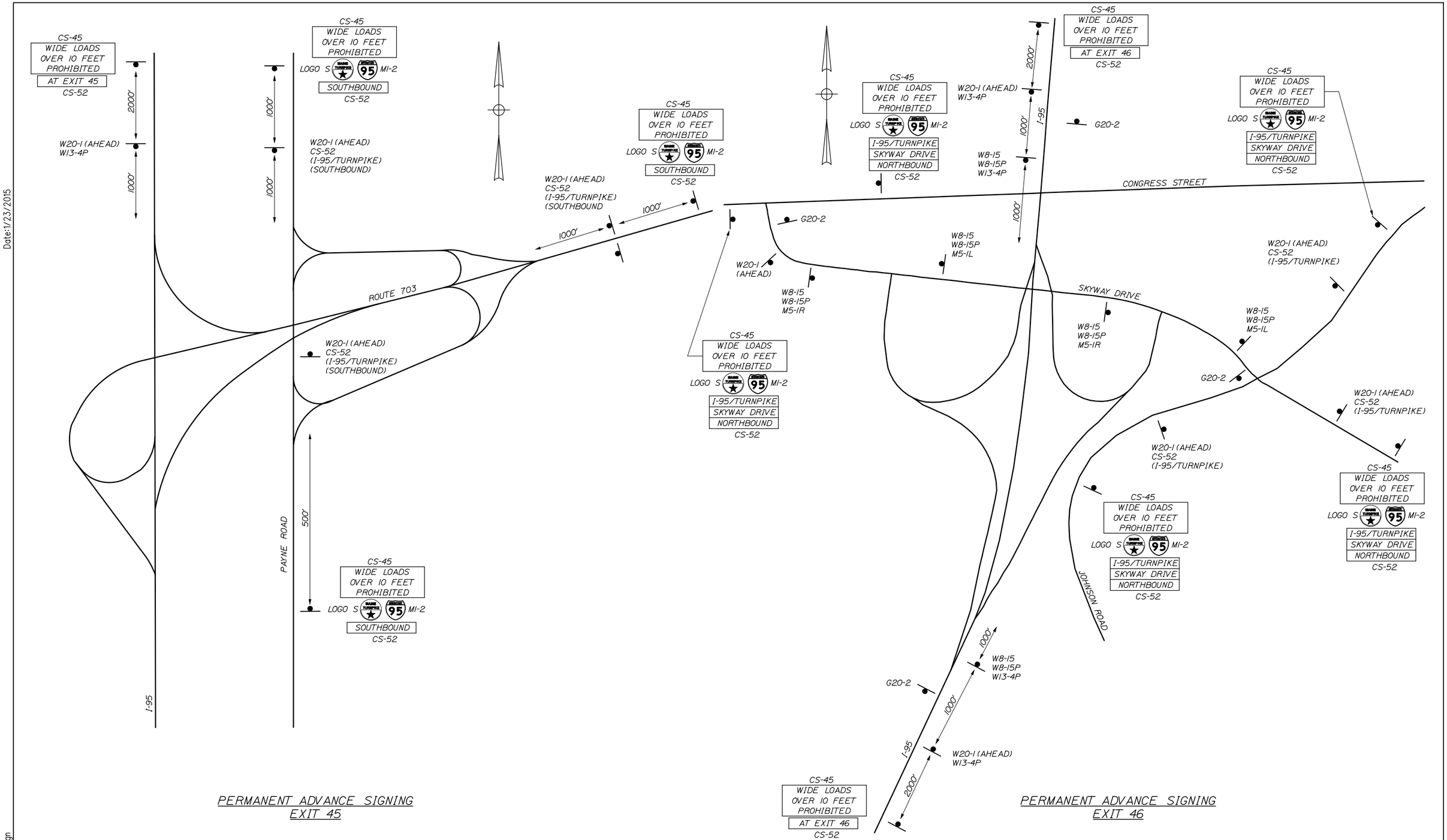

Date:1/23/2015

Filename: 026_AdvanceSign.dgn

Scale:			
No.	Revision	By	Date

Designed by: HNTB

CONSULTANT PROJECT MANAGER: Craig R. Morin, P.E.

	By	Date		By	Date
Designed	CAH	01/15	Checked	CRM	01/15
Drawn	MPC	01/15	In Charge of	RAL	01/15

HNTB CORPORATION
340 County Road, Suite 6-C
Westbrook, ME 04092
TEL (207) 774-5155
FAX (207) 228-0909

MAINE TURNPIKE

THE GOLD STAR MEMORIAL HIGHWAY

MTA PROJECT MANAGER: Ralph C. Norwood, IV, P.E., P.T.O.E.

BRIDGE REPAIRS
PAVEMENT REHABILITATION

ADVANCE SIGNING
EXIT 45 AND EXIT 46

SHEET NUMBER: MOT-13

CONTRACT:2015.03

IDENTIFICATION NUMBER	SIZE OF SIGN WIDTH	SIZE OF SIGN HEIGHT	TEXT	TEXT DIMENSIONS (INCHES) LETTER HEIGHT	TEXT DIMENSIONS (INCHES) VERTICAL SPACING	TEXT DIMENSIONS (INCHES) ARROW RTE. MKR.	NUMBER OF SIGNS REQUIRED	COLOR BACK-GROUND	COLOR LEGEND BORDER	BORDER RADIUS	AREA IN SQUARE FEET
G20-2	48"	24"	END ROAD WORK	TEXT DIMENSIONS SHALL CONFORM TO "2004 EDITION - STANDARD HIGHWAY SIGNS - 2012 SUPPLEMENT"			13	COLORS SHALL CONFORM TO "2004 EDITION - STANDARD HIGHWAY SIGNS - 2012 SUPPLEMENT"			8.00 (104)
G20-5aP	48"	24"	WORK ZONE				4				8.00 (32)
R2-1 (50) (30)	48"	60"	SPEED LIMIT XX				4 4				20.00 (160)
R2-6aP	48"	24"	FINES DOUBLED	6" 6"	4.5"		8				8.00 (64)
M5-1L	36"	24"		TEXT DIMENSIONS SHALL CONFORM TO "2004 EDITION - STANDARD HIGHWAY SIGNS - 2012 SUPPLEMENT"			2				6.00 (12)
M5-1R	36"	24"					2				6.00 (12)
R1-1	48"	48"	STOP				2	RED	WHITE		16.00 (32)
R1-2	60"	60" 60"	YIELD				2	WHITE	RED		12.50 (25)
R2-12	36"	54"	END WORK ZONE SPEED	6" 6" 6" 6"	4.5" 4.5" 4.5"		8	WHITE	BLACK		13.50 (108)
E5-1	48"	36"	EXIT	TEXT DIMENSIONS SHALL CONFORM TO "2004 EDITION - STANDARD HIGHWAY SIGNS - 2012 SUPPLEMENT"			2	ORANGE	BLACK		12.00 (24)
E5-2	48"	36"	EXIT OPEN				2				12.00 (24)
E5-2a	48"	36"	EXIT CLOSED				2				12.00 (24)
PLACARD	48"	18"	AHEAD				2				6.00 (12)

IDENTIFICATION NUMBER	SIZE OF SIGN WIDTH	SIZE OF SIGN HEIGHT	TEXT	TEXT DIMENSIONS (INCHES) LETTER HEIGHT	TEXT DIMENSIONS (INCHES) VERTICAL SPACING	TEXT DIMENSIONS (INCHES) ARROW RTE. MKR.	NUMBER OF SIGNS REQUIRED	COLOR BACK-GROUND	COLOR LEGEND BORDER	BORDER RADIUS	AREA IN SQUARE FEET
W1-4L	48"	48"		TEXT DIMENSIONS SHALL CONFORM TO "2004 EDITION - STANDARD HIGHWAY SIGNS - 2012 SUPPLEMENT"			2	COLORS SHALL CONFORM TO "2004 EDITION - STANDARD HIGHWAY SIGNS - 2012 SUPPLEMENT"			16.00 (32)
W1-4R	48"	48"					2				16.00 (32)
W3-1	48"	48"					2	ORANGE	BLACK		16.00 (32)
W3-2a	48"	48"					2	ORANGE	BLACK		16.00 (32)
W3-4	48"	48"	BE PREPARED TO STOP				4	COLORS SHALL CONFORM TO "2004 EDITION - STANDARD HIGHWAY SIGNS - 2012 SUPPLEMENT"			16.00 (64)
W3-5 (50)	48"	48"	SPEED LIMIT XX				4				16.00 (64)
W4-1	48"	48"					2				16.00 (32)
W4-2L	48"	48"					4				16.00 (64)
W4-2R	48"	48"					6				16.00 (96)
W5-4 (LANE)	48"	48"	LANE NARROWS				4				16.00 (64)

Date:1/23/2015

Filename: 027_SignSumm1.dgn

Scale:

No.	Revision	By	Date

Designed by:

HNTB

CONSULTANT PROJECT MANAGER: Craig R. Morin, P.E.

	By	Date		By	Date
Designed	CAH	01/15	Checked	CRM	01/15
Drawn	MPC	01/15	In Charge of	RAL	01/15

HNTB CORPORATION
340 County Road, Suite 6-C
Westbrook, ME 04092
TEL (207) 774-5155
FAX (207) 228-0909

MAINE TURNPIKE

THE GOLD STAR MEMORIAL HIGHWAY

MTA PROJECT MANAGER: Ralph C. Norwood, IV, P.E., P.T.O.E.

BRIDGE REPAIRS
PAVEMENT REHABILITATION

SIGN SUMMARY 1

SHEET NUMBER: MOT-14

CONTRACT:2015.03

IDENTIFICATION NUMBER	SIZE OF SIGN WIDTH	SIZE OF SIGN HEIGHT	TEXT	TEXT DIMENSIONS (INCHES) LETTER HEIGHT	TEXT DIMENSIONS (INCHES) VERTICAL SPACING	TEXT DIMENSIONS (INCHES) ARROW RTE. MKR.	NUMBER OF SIGNS REQUIRED	COLOR BACK-GROUND	COLOR LEGEND BORDER	BORDER RADIUS	AREA IN SQUARE FEET
W5-4 (RAMP)	48"	48"	RAMP NARROWS	TEXT DIMENSIONS SHALL CONFORM TO "2004 EDITION - STANDARD HIGHWAY SIGNS - 2012 SUPPLEMENT"			4	COLORS SHALL CONFORM TO "2004 EDITION - STANDARD HIGHWAY SIGNS - 2012 SUPPLEMENT"			16.00 (64)
W8-1	48"	48"	BUMP				4				16.00 (64)
W8-11	48"	48"	UNEVEN LANES				4				16.00 (64)
W8-15	48"	48"	GROOVED PAVEMENT				6				16.00 (96)
W8-15P	30"	24"					6				5.00 (30)
W8-17	48"	48"					4				16.00 (64)
W8-17P	30"	24"	SHOULDER DROP-OFF				4				5.00 (20)
W8-23	48"	48"	NO SHOULDER				4				16.00 (64)
W13-4P	24"	24"	ON RAMP				5				4.00 (20)
W20-1 (1 MILE) (AHEAD)	48"	48"	ROAD WORK XXX				4 10				16.00 (224)
W20-4	48"	48"	ONE LANE ROAD AHEAD				4				16.00 (64)

IDENTIFICATION NUMBER	SIZE OF SIGN WIDTH	SIZE OF SIGN HEIGHT	TEXT	TEXT DIMENSIONS (INCHES) LETTER HEIGHT	TEXT DIMENSIONS (INCHES) VERTICAL SPACING	TEXT DIMENSIONS (INCHES) ARROW RTE. MKR.	NUMBER OF SIGNS REQUIRED	COLOR BACK-GROUND	COLOR LEGEND BORDER	BORDER RADIUS	AREA IN SQUARE FEET
W20-5L (1/2 MILE)	48"	48"	LEFT LANE CLOSED XXX	TEXT DIMENSIONS SHALL CONFORM TO "2004 EDITION - STANDARD HIGHWAY SIGNS - 2012 SUPPLEMENT"			4	COLORS SHALL CONFORM TO "2004 EDITION - STANDARD HIGHWAY SIGNS - 2012 SUPPLEMENT"			16.00 (64)
W20-5a(R)	48"	48"	2 RIGHT LANES CLOSED AHEAD				2				16.00 (32)
W20-5R (1/2 MILE)	48"	48"	RIGHT LANE CLOSED XXX				4				16.00 (64)
W20-7a	48"	48"					4				16.00 (64)
W21-5aR	48"	48"	RIGHT SHOULDER CLOSED				4				16.00 (64)
W21-5aL	48"	48"	LEFT SHOULDER CLOSED				2				16.00 (32)
W24-1L	48"	48"					2				16.00 (32)
W24-1R	48"	48"					2				16.00 (32)
W21-5bR (1000 FT) (AHEAD)	48"	48"	RIGHT SHOULDER CLOSED 1000 FT				2 4				16.00 (96)

Date:1/23/2015

Filename: 028_SignSumm2.dgn

Scale:

No.	Revision	By	Date

Designed by:

HNTB

CONSULTANT PROJECT MANAGER: Craig R. Morin, P.E.

	By	Date		By	Date
Designed	CAH	01/15	Checked	CRM	01/15
Drawn	MPC	01/15	In Charge of	RAL	01/15

HNTB CORPORATION
340 County Road, Suite 6-C
Westbrook, ME 04092
TEL (207) 774-5155
FAX (207) 228-0909

MAINE TURNPIKE

THE GOLD STAR MEMORIAL HIGHWAY

MTA PROJECT MANAGER: Ralph C. Norwood, IV, P.E., P.T.O.E.

BRIDGE REPAIRS
PAVEMENT REHABILITATION

SIGN SUMMARY 2

SHEET NUMBER: MOT-15

CONTRACT:2015.03

IDENTIFICATION NUMBER	SIZE OF SIGN WIDTH	SIZE OF SIGN HEIGHT	TEXT	TEXT DIMENSIONS (INCHES) LETTER HEIGHT	TEXT DIMENSIONS (INCHES) VERTICAL SPACING	TEXT DIMENSIONS (INCHES) ARROW RTE. MKR.	NUMBER OF SIGNS REQUIRED	COLOR BACK-GROUND	COLOR LEGEND BORDER	BORDER RADIUS	AREA IN SQUARE FEET
W21-5bL (1000 FT) (AHEAD)	48"	48"	LEFT SHOULDER CLOSED 1000 FT	TEXT DIMENSIONS SHALL CONFORM TO "2004 EDITION - STANDARD HIGHWAY SIGNS - 2012 SUPPLEMENT"			1 1	COLORS SHALL CONFORM TO "2004 EDITION - STANDARD HIGHWAY SIGNS - 2012 SUPPLEMENT"			16.00 (32)
CS-3	48"	48"	EXPECT STOPPED TRAFFIC	6" 6" 6"	4" 4"		4	ORANGE	BLACK		16.00 (64)
CS-10	48"	48"	TRUCKS ENTERING	7" 7"	6"		2				16.00 (32)
CS-11	48"	48"	NO STOPPING ON PAVEMENT	6" 6" 6"	4" 4"		2				16.00 (32)
CS-28	96"	48"	ROAD WORK X MILES AHEAD PLEASE USE CAUTION	8" 8" 8"	6" 6" 6" 6"		2				32.00 (64)
CS-33	96"	36"	WATCH FOR TRUCKS ENTERING AND LEAVING WORK AREA	6" 6" 6"	4" 4"		6				24.00 (144)
CS-45	96"	48"	WIDE LOADS OVER 10 FEET PROHIBITED	8" C 8" C 8" C	6" 6" 6" 6"		11				32.00 (352)

IDENTIFICATION NUMBER	SIZE OF SIGN WIDTH	SIZE OF SIGN HEIGHT	TEXT	TEXT DIMENSIONS (INCHES) LETTER HEIGHT	TEXT DIMENSIONS (INCHES) VERTICAL SPACING	TEXT DIMENSIONS (INCHES) ARROW RTE. MKR.	NUMBER OF SIGNS REQUIRED	COLOR BACK-GROUND	COLOR LEGEND BORDER	BORDER RADIUS	AREA IN SQUARE FEET
CS-52	96"	18"	AT SKYWAY DR SOUTHBOUND I-95/TURNPIKE AT EXIT 46 AT EXIT 45 NORTHBOUND	8" C	5" 5"		5 6 11 2 1 5	COLORS SHALL CONFORM TO "2004 EDITION - STANDARD HIGHWAY SIGNS - 2012 SUPPLEMENT"			12.00 (60) 12.00 (72) 12.00 (132) 12.00 (24) 12.00 (12) 12.00 (60)
CS-53	48"	48"		TEXT DIMENSIONS SHALL CONFORM TO "2004 EDITION - STANDARD HIGHWAY SIGNS - 2012 SUPPLEMENT"			4				16.00 (64)
CS-54	48"	48"	NO SHOULDERS NEXT 1000 FT				2				16.00 (32)
MI-2	24"	24"	INTERSTATE 95				8	SHALL CONFORM TO "STANDARD HIGHWAY SIGNS" - 2000			4.00 (32)
LOGO S	24"	24"	MAINE TURNPIKE	SEE DETAILS			8	SEE DETAILS			4.00 (32)

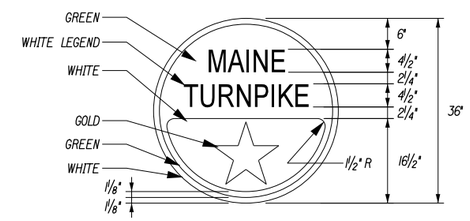

MAINE TURNPIKE SHIELD (MTA)
NOT TO SCALE
NOTE: FOR 24" SHIELD REDUCE ALL MEASUREMENTS BY 1/3.

PROPOSED SIGN SUMMARY

IDENTIFICATION NUMBER	DESCRIPTION	QUANTITY	COLOR BACK-GROUND	COLOR LEGEND	SIGN SIZE HEIGHT (IN)	SIGN SIZE WIDTH (IN)	SIGN SIZE AREA (SQ. FT.)	NUMBER OF POSTS	POST SIZE	HEIGHT OF POST* LEFT (FEET)	HEIGHT OF POST* CENTER (FEET)	HEIGHT OF POST* RIGHT (FEET)	FOUNDATION SIZE AND TYPE	BREAKAWAY DEVICE	DIRECTION (NB=NORTHBOUND) (SB=SOUTHBOUND)	LOCATION	OFFSET (FROM BASELINE TO SIGN CENTER)	
R3-8		3	WHITE	BLACK	48	48	16.0	←		MOUNT TO OVERHEAD SIGN STRUCTURE RIGHT COLUMN		→		NO	NB	MM 43.4	RT POST	
								2	6" X 6" WOOD	N/A	FIELD VERIFY NEW POST HEIGHT	N/A	N/A	YES	NB	2160+50	70' RT	STATIONS TO BE DETERMINED BY THE RESIDENT
								2	6" X 6" WOOD	N/A		N/A	N/A	YES	NB	2168+50	70' RT	
R3-8 MOD	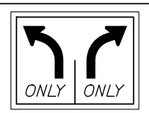	1	WHITE	BLACK	30	42	8.75	1	6" X 6" WOOD	N/A	10' 6"	N/A	N/A	NO	SB OFF	114+50	20' RT	
SP-5a		2	PURPLE	WHITE	72	138	69.0	2	W8X18	16'	N/A	20'	24" CONCRETE	YES	NB	TBD	TBD	STATIONS TO BE DETERMINED BY THE RESIDENT
								2	W8X18	16'	N/A	20'	24" CONCRETE	YES	SB	TBD	TBD	

Date:1/23/2015

Filename: 029_SignSumm3.dgn

Scale:

No.	Revision	By	Date

Designed by:

HNTB

CONSULTANT PROJECT MANAGER: Craig R. Morin, P.E.

	By	Date		By	Date
Designed	CAH	01/15	Checked	CRM	01/15
Drawn	MPC	01/15	In Charge of	RAL	01/15

HNTB CORPORATION
340 County Road, Suite 6-C
Westbrook, ME 04092
TEL (207) 774-5155
FAX (207) 228-0909

MAINE TURNPIKE

THE GOLD STAR MEMORIAL HIGHWAY

MTA PROJECT MANAGER: Ralph C. Norwood, IV, P.E., P.T.O.E.

BRIDGE REPAIRS
PAVEMENT REHABILITATION

SIGN SUMMARY 3

SHEET NUMBER: MOT-16

CONTRACT:2015.03

Date:1/23/2015

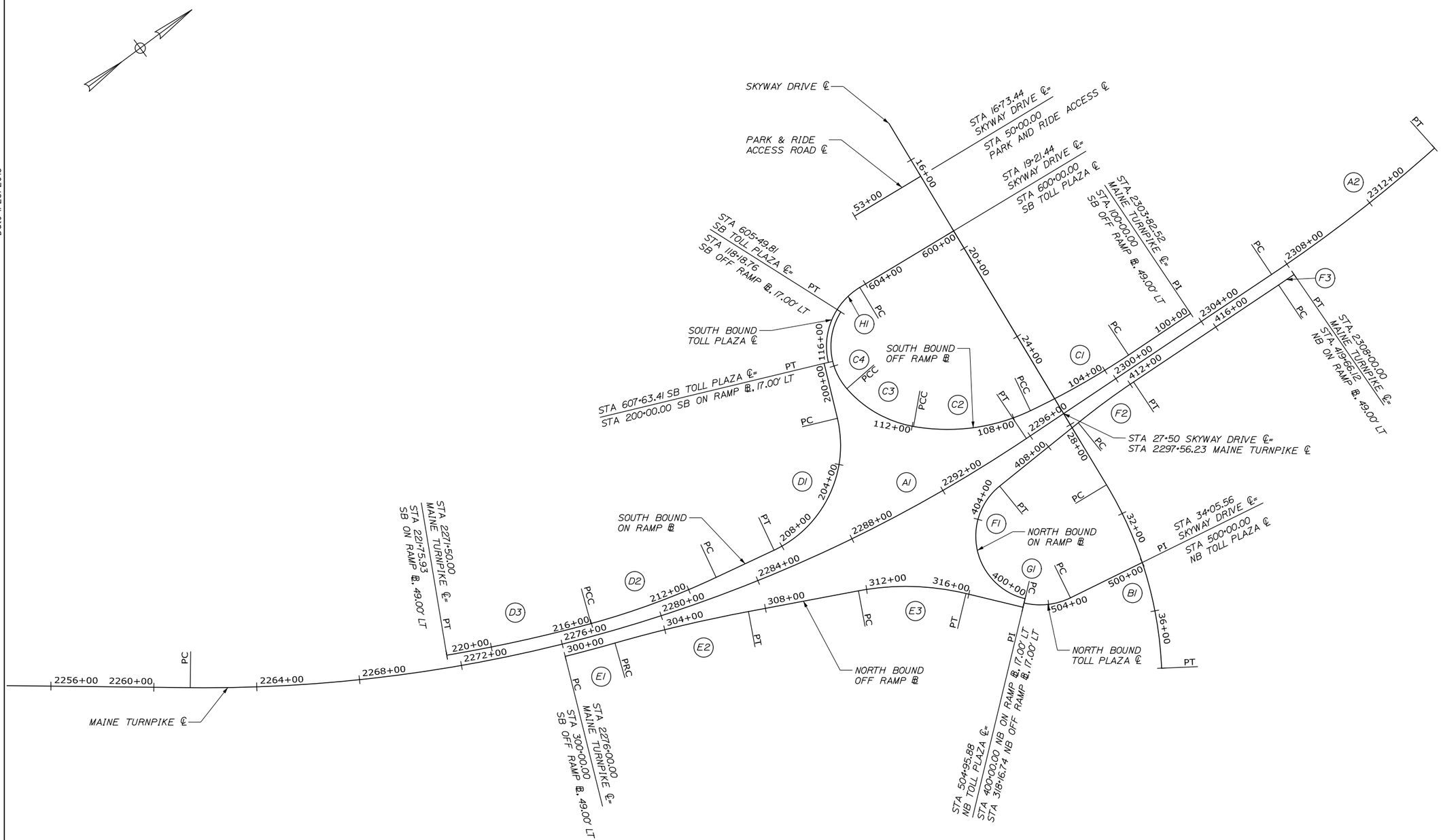

Scale: 200 0 200 400
Scale of Feet

No.	Revision	By	Date

Designed by:

HNTB

CONSULTANT PROJECT MANAGER: Craig R. Morin, P.E.

	By	Date		By	Date
Designed	PDB	01/15	Checked	MPC	01/15
Drawn	PDB	01/15	In Charge of	RAL	01/15

HNTB CORPORATION
340 County Road, Suite 6-C
Westbrook, ME 04092
TEL (207) 774-5155
FAX (207) 228-0909

MAINE TURNPIKE

THE GOLD STAR MEMORIAL HIGHWAY

MTA PROJECT MANAGER: Ralph C. Norwood, IV, P.E., P.T.O.E.

BRIDGE REPAIR
PAVEMENT REHABILITATION

GEOMETRIC PLAN

SHEET NUMBER: GM-01

CONTRACT:2015.03

Filename: 030_Geometrics.dgn

MAINLINE TUNRIKE

	POINT	STATION	DELTA	Dc	R	T	L	EXT.	N	E	BEARING
	PC	2261+41.37							294169.7280	2908010.1950	
A1	PI	2279+15.43	34°24'30.7" Left	1°00'00.0"	5729.58	1774.07	3440.85	268.37	295582.2355	2909083.5736	
	PT	2295+82.22							297354.1511	2909170.9489	N 2°49'22.9" E
	PC	2307+28.3							298498.8369	2909227.3947	
A2	PI	2311+29.89	8°01'07.2" Left	1°00'00.0"	5729.58	401.59	801.87	14.06	298899.9388	2909247.1736	
	PT	2315+30.16							299299.8780	2909210.8070	

SKYWAY DRIVE

	POINT	STATION	DELTA	Dc	R	T	L	EXT.	N	E	BEARING
	PI	14+33.93							297655.4600	2907869.6380	S 84°26'24.3" E
	PC	30+72.83							297496.6720	2909500.8323	
B1	PI	34+56.64	28°42'17.4" Right	3°49'11.0"	1500.00	383.81	751.49	48.32	297459.4862	2909882.8337	
	PT	38+24.33							297243.3960	2910200.0290	

SOUTH BOUND OFF RAMP

	POINT	STATION	DELTA	Dc	R	T	L	EXT.	N	E	BEARING
	PI	100+00.00							298155.8910	2909161.4240	S 2°49'22.7" W
	PC	102+90.33							297865.9180	2909147.1254	
C1	PI	105+10.01	8°22'34.4" Right	1°54'35.5"	3000.00	219.68	438.58	8.03	297646.5040	2909136.3061	
	PCC	107+28.9							297431.0066	2909093.6395	
C2	PI	109+69.5	35°34'21.4" Right	7°38'22.0"	750.00	240.60	465.64	37.65	297194.9873	2909046.9098	
	PCC	111+94.55							297030.1983	2908871.6004	
C3	PI	113+52.34	38°38'50.3" Right	12°43'56.6"	450.00	157.80	303.54	26.86	296922.1227	2908756.6249	
	PCC	114+98.08							296909.5201	2908599.3326	
C4	PI	116+84.75	73°29'40.0" Right	22°55'05.9"	250.00	186.66	320.68	62.00	296894.6119	2908413.2640	
	PCC	118+18.76							297068.7775	2908346.1064	

SOUTH BOUND ON RAMP

	POINT	STATION	DELTA	Dc	R	T	L	EXT.	N	E	BEARING
	PI	200+00.00							296897.4470	2908468.0490	S 66°55'24.9" E
	PC	202+19.24							296811.5140	2908669.7460	
D1	PI	205+86.04	78°22'01.1" Right	12°43'56.6"	450.00	366.80	615.49	130.55	296667.7455	2909007.1912	
	PT	208+34.73							296308.2418	2908934.4192	S 11°26'36.2" W
	PC	210+83.09							296064.8197	2908885.1448	
D2	PI	213+43.35	9°54'58.5" Right	1°54'35.5"	3000.00	260.26	519.21	11.27	295809.7367	2908833.5099	
	PCC	216+02.31							295567.3564	2908738.7190	
D3	PI	218+89.36	5°47'08.3" Right	1°00'31.1"	5680.58	287.05	573.62	7.25	295300.0216	2908634.1688	
	PT	221+75.92							295044.5880	2908503.2020	

NORTH BOUND OFF RAMP

	POINT	STATION	DELTA	Dc	R	T	L	EXT.	N	E	BEARING
	PC	300+00.00							295411.4264	2908781.4023	
E1	PI	301+00.07	1°59'03.2" Left	0°59'29.5"	5778.58	100.07	200.12	0.87	295503.7818	2908819.9313	
	PRC	302+00.12							295597.4158	2908855.2395	
E2	PI	304+66.63	5°19'33.6" Right	0°59'59.7"	5730.00	266.51	532.64	6.19	295846.7872	2908949.2743	
	PT	307+32.76							296086.3534	2909066.0503	N 25°59'12.5" E
	PC	311+67.73							296477.3457	2909256.6386	
E3	PI	313+81.41	24°07'23.7" Right	5°43'46.5"	1000.00	213.68	421.03	22.57	296669.4224	2909350.2660	
	PT	315+88.76							296806.4591	2909514.2186	N 50°06'36.2" E
	PI	318+16.74							296952.6661	2909689.1426	

NORTH BOUND ON RAMP

	POINT	STATION	DELTA	Dc	R	T	L	EXT.	N	E	BEARING
	PC	400+00.00							296978.7730	2909667.3550	
F1	PI	405+08.24	127°36'55.2" Right	22°55'05.9"	250.00	508.24	556.83	316.40	296652.8336	2909277.3934	
	PT	405+56.83							297160.6719	2909257.2240	N 2°16'27.8" W
	PC	409+48.90							297552.4319	2909241.6648	
F2	PI	410+82.44	5°05'50.9" Right	1°54'35.5"	3000.00	133.54	266.90	2.97	297685.8666	2909236.3652	
	PT	412+15.80							297819.2444	2909242.9424	N 2°49'23.2" E
	PC	418+93.77							298496.3948	2909276.3343	
F3	PI	419+29.94	0°43'02.2" Left	0°59'29.5"	5778.58	36.17	72.34	0.11	298532.5227	2909278.1159	
	PT	419+66.12							298568.6700	2909279.4450	

NORTH BOUND TOLL PLAZA

	POINT	STATION	DELTA	Dc	R	T	L	EXT.	N	E	BEARING
	PI	500+00.00							297428.1180	2909825.7310	S 10°23'47.1" W
	PC	503+10.81							297122.4104	2909769.6429	
G1	PI	504+07.23	39°42'48.5" Right	21°27'32.7"	267.00	96.42	185.07	16.88	297027.5688	2909752.2423	
	PT	504+95.88							296965.7300	2909678.2580	

SOUTH BOUND TOLL PLAZA

	POINT	STATION	DELTA	Dc	R	T	L	EXT.	N	E	BEARING
	PI	600+00.00							297608.2260	2908354.8600	S 5°33'35.9" W
	PC	604+25.64							297184.5909	2908313.6210	
H1	PI	606+21.35	72°29'01.7" Left	21°27'32.7"	267.00	195.71	337.78	64.05	296989.7972	2908294.6587	
	PT	607+63.41							296913.0860	2908474.7130	

PARK AND RIDE ACCESS ROAD

POINT	STATION	DELTA	Dc	R	T	L	EXT.	N	E	BEARING
PT	50+00.00							297632.2547	2908108.0212	S 5°33'35.7" W
PI	53+00.00							297333.6660	2908078.9552	

Date:1/23/2015

Filename: 031_Geometrics.dgn

Scale:

No.	Revision	By	Date

Designed by:

HNTB

CONSULTANT PROJECT MANAGER: Craig R. Morin, P.E.

	By	Date		By	Date
Designed	PDB	01/15	Checked	MPC	01/15
Drawn	PDB	01/15	In Charge of	RAL	01/15

HNTB CORPORATION
340 County Road, Suite 6-C
Westbrook, ME 04092
TEL (207) 774-5155
FAX (207) 228-0909

MAINE TURNPIKE

THE GOLD STAR MEMORIAL HIGHWAY

MTA PROJECT MANAGER: Ralph C. Norwood, IV, P.E., P.T.O.E.

BRIDGE REPAIR
PAVEMENT REHABILITATION

GEOMETRIC PLAN

SHEET NUMBER: GM-02

CONTRACT:2015.03

Date:1/23/2015

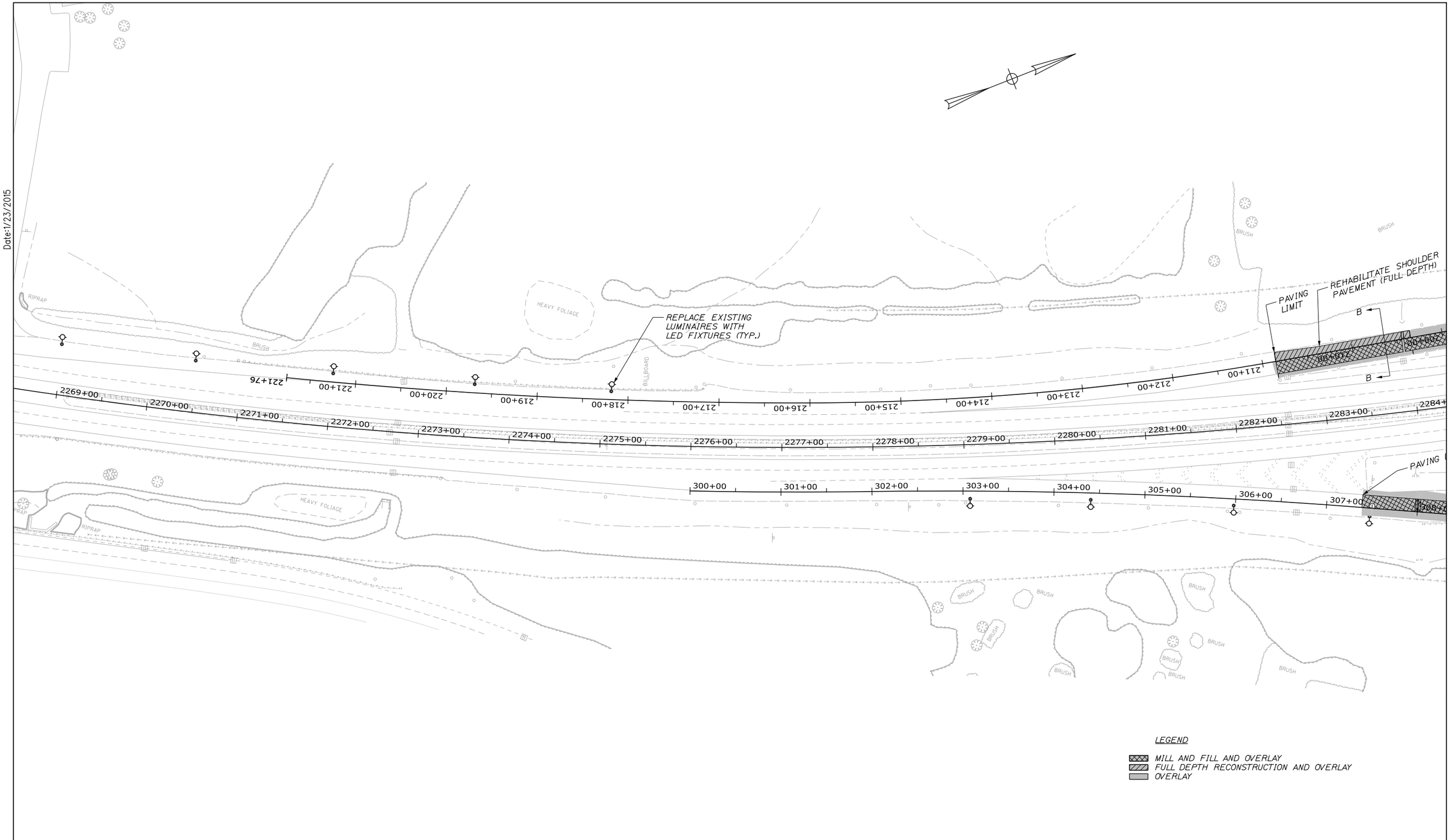

Filename: 032_Highway1.dgn

Scale: 50 0 50 100

No.	Revision	By	Date

Designed by:

HNTB

CONSULTANT PROJECT MANAGER: Craig R. Morin, P.E.

	By	Date		By	Date
Designed	CAH	01/15	Checked	CRM	01/15
Drawn	MPC	01/15	In Charge of	RAL	01/15

HNTB CORPORATION
340 County Road, Suite 6-C
Westbrook, ME 04092
TEL (207) 774-5155
FAX (207) 228-0909

MAINE TURNPIKE

THE GOLD STAR MEMORIAL HIGHWAY

MTA PROJECT MANAGER: Ralph C. Norwood, IV, P.E., P.T.O.E.

BRIDGE REPAIRS
PAVEMENT REHABILITATION

EXIT 46 HIGHWAY PLAN 1

SHEET NUMBER: HP-01

CONTRACT:2015.03

Date:1/23/2015

SEE EXIT 46 SB OFF RAMP WIDENING PLAN AND SECTIONS FOR WORK IN THIS AREA

REHABILITATE SHOULDER PAVEMENT (FULL DEPTH)

REGRADE SLOPES TO DRAIN AWAY FROM PAVEMENT (PAID LABOR AND EQUIPMENT)

PAVING LIMIT

REHABILITATE SHOULDER PAVEMENT (FULL DEPTH)

INSTALL TERMINAL END - ANCHORED END GUARDRAIL END TREATMENT

INSTALL TRAFFIC PREEMPTION LOOPS PRIOR TO OVERLAY PAVING

REPLACE EXISTING LUMINAIRES WITH LED FIXTURES (TYP.)

ADJUST GUARDRAIL HEIGHT TO 30" (TYP.) (SEE GUARDRAIL SCHEDULE)

PAVING LIMIT

PAVING LIMIT

AIRPORT APPROACH LIGHT BRIDGE (EXISTING)

ADJUST GUARDRAIL HEIGHT TO 30" (TYP.) (SEE GUARDRAIL SCHEDULE)

INSTALL TERMINAL END - ANCHORED END GUARDRAIL END TREATMENT

INSTALL TRAFFIC PREEMPTION LOOPS PRIOR TO OVERLAY PAVING

PAVING LIMIT

REHABILITATE SHOULDER PAVEMENT (FULL DEPTH)

BERM DROP OFF CORRECTION (TYP. - ALL NON-GUARDRAIL OVERLAY AREAS)

ADJUST GUARDRAIL TO 30" HEIGHT (TYP.) (SEE GUARDRAIL SCHEDULE)

SEE EXIT 46 NB ON RAMP WIDENING PLAN AND SECTIONS FOR WORK IN THIS AREA

SKYWAY DRIVE (SEE NOTE 1)

LEGEND

MILL AND FILL AND OVERLAY
FULL DEPTH RECONSTRUCTION AND OVERLAY
OVERLAY

NOTE:

1. SEE STRUCTURAL PLANS FOR SKYWAY DRIVE BRIDGE AND BRIDGE APPROACH WORK

Scale: 50 0 50 100

No.	Revision	By	Date

Designed by: HNTB

CONSULTANT PROJECT MANAGER: Craig R. Morin, P.E.

	By	Date		By	Date
Designed	CAH	01/15	Checked	CRM	01/15
Drawn	MPC	01/15	In Charge of	RAL	01/15

HNTB CORPORATION
340 County Road, Suite 6-C
Westbrook, ME 04092
TEL (207) 774-5155
FAX (207) 228-0909

MAINE TURNPIKE

THE GOLD STAR MEMORIAL HIGHWAY

MTA PROJECT MANAGER: Ralph C. Norwood, IV, P.E., P.T.O.E.

BRIDGE REPAIRS
PAVEMENT REHABILITATION

EXIT 46 HIGHWAY PLAN 2

SHEET NUMBER: HP-02

CONTRACT:2015.03

Filename: 033_Highway2.dgn

Date:1/23/2015

CONGRESS STREET

REGRADE AREA UNDER CONGRESS ST BRIDGE TO ENSURE PROPER DRAINAGE FLOW (PAID LABOR AND EQUIPMENT)

REPLACE EXISTING LUMINAIRES WITH LED FIXTURES (TYP.)

RECONSTRUCT SHOULDER PAVEMENT TO 10' WIDTH

REMOVE AND STACK GUARDRAIL (SEE GUARDRAIL SCHEDULE)

REMOVE AND REINSTALL SIGN ON CONGRESS STREET BRIDGE (SEE STRUCTURAL DETAILS) REMOVE AND RESET FOUNDATIONS, POSTS AND BREAKAWAYS FOR MTA FURNISHED PARK AND RIDE/ EZ PASS SERVICES CENTER SIGN

REMOVE AND STACK FLEAT 350 END TERMINAL

REMOVE AND STACK GUARDRAIL

REMOVE AND STACK FLEAT 350 END TERMINAL

RECONSTRUCT SHOULDER PAVEMENT TO 10' WIDTH REGRADE FORESLOPE FOR SECTION C-C' FILL SLOPE DETAIL

RELOCATE EXISTING ELECTRICAL CONDUITS, WIRE, JUNCTION BOXES, FRAMES, AND GRATES INTO FILL SLOPE. BACKFILL AND COMPACT HOLES

REPLACE EXISTING LUMINAIRES WITH LED FIXTURES (TYP.)

AVING LIMIT

SKYWAY DRIVE (SEE NOTE 1)

NOTE:

1. SEE STRUCTURAL PLANS FOR SKYWAY DRIVE BRIDGE AND BRIDGE APPROACH WORK

LEGEND

- FULL DEPTH SHOULDER PAVEMENT
- MILL AND FILL AND OVERLAY
- FULL DEPTH RECONSTRUCTION AND OVERLAY
- OVERLAY

Scale: 50 0 50 100

No.	Revision	By	Date

Designed by: HNTB

CONSULTANT PROJECT MANAGER: Craig R. Morin, P.E.

	By	Date		By	Date
Designed	CAH	01/15	Checked	CRM	01/15
Drawn	MPC	01/15	In Charge of	RAL	01/15

HNTB CORPORATION
340 County Road, Suite 6-C
Westbrook, ME 04092
TEL (207) 774-5155
FAX (207) 228-0909

MAINE TURNPIKE

THE GOLD STAR MEMORIAL HIGHWAY

MTA PROJECT MANAGER: Ralph C. Norwood, IV, P.E., P.T.O.E.

BRIDGE REPAIRS
PAVEMENT REHABILITATION

EXIT 46 HIGHWAY PLAN 3

SHEET NUMBER: HP-03

CONTRACT:2015.03

Filename: 034_Highway3.dgn

PROPOSED ROADWAY LUMINAIRE FIXTURE SCHEDULE

LOCATION	LUMINAIR MTG HT	POLE SETBACK	TYPE
STA 2269+00, LT	30'	4'	150W HPS Equivalent
STA 2270+50, LT	30'	4'	150W HPS Equivalent
STA 2272+00, LT	30'	4'	150W HPS Equivalent
STA 2273+50, LT	30'	4'	150W HPS Equivalent
STA 2275+00, LT	30'	4'	150W HPS Equivalent
STA 607+25, RT	30'	4'	250W HPS Equivalent
STA 605+75, RT	30'	4'	250W HPS Equivalent
STA 604+40, RT	30'	4'	250W HPS Equivalent
STA 602+00, RT	30'	4'	250W HPS Equivalent
STA 52+20, 175 LT	30'	4'	250W HPS Equivalent
STA 52+50, 47 LT	30'	4'	250W HPS Equivalent
STA 50+75, 47 LT	30'	4'	250W HPS Equivalent (2 Required)
STA 50+75, 152 LT	30'	4'	250W HPS Equivalent
STA 602+00, LT	30'	4'	250W HPS Equivalent
STA 603+65, LT	30'	4'	250W HPS Equivalent
STA 605+00, LT	30'	4'	250W HPS Equivalent
STA 606+50, LT	30'	4'	250W HPS Equivalent
STA 108+50, RT	30'	4'	150W HPS Equivalent
STA 107+00, RT	30'	4'	150W HPS Equivalent
STA 105+50, RT	30'	4'	150W HPS Equivalent
STA 104+00, RT	30'	4'	150W HPS Equivalent
STA 303+00, RT	30'	4'	150W HPS Equivalent
STA 304+50, RT	30'	4'	150W HPS Equivalent
STA 306+00, RT	30'	4'	150W HPS Equivalent
STA 307+50, RT	30'	4'	150W HPS Equivalent
STA 318+10, RT	20'	4'	150W HPS Equivalent
STA 504+10, LT	20'	4'	150W HPS Equivalent
STA 503+00, LT	30'	4'	250W HPS Equivalent
STA 501+25, LT	30'	4'	250W HPS Equivalent
STA 501+65, RT	30'	4'	250W HPS Equivalent
STA 503+50, RT	30'	4'	250W HPS Equivalent
STA 504+50, RT	20'	4'	150W HPS Equivalent
STA 400+60, RT	20'	4'	150W HPS Equivalent
STA 401+60, RT	20'	4'	150W HPS Equivalent
STA 2304+50, RT	30'	4'	150W HPS Equivalent
STA 2306+00, RT	30'	4'	150W HPS Equivalent
STA 2307+50, RT	30'	4'	150W HPS Equivalent
STA 2309+00, RT	30'	4'	150W HPS Equivalent

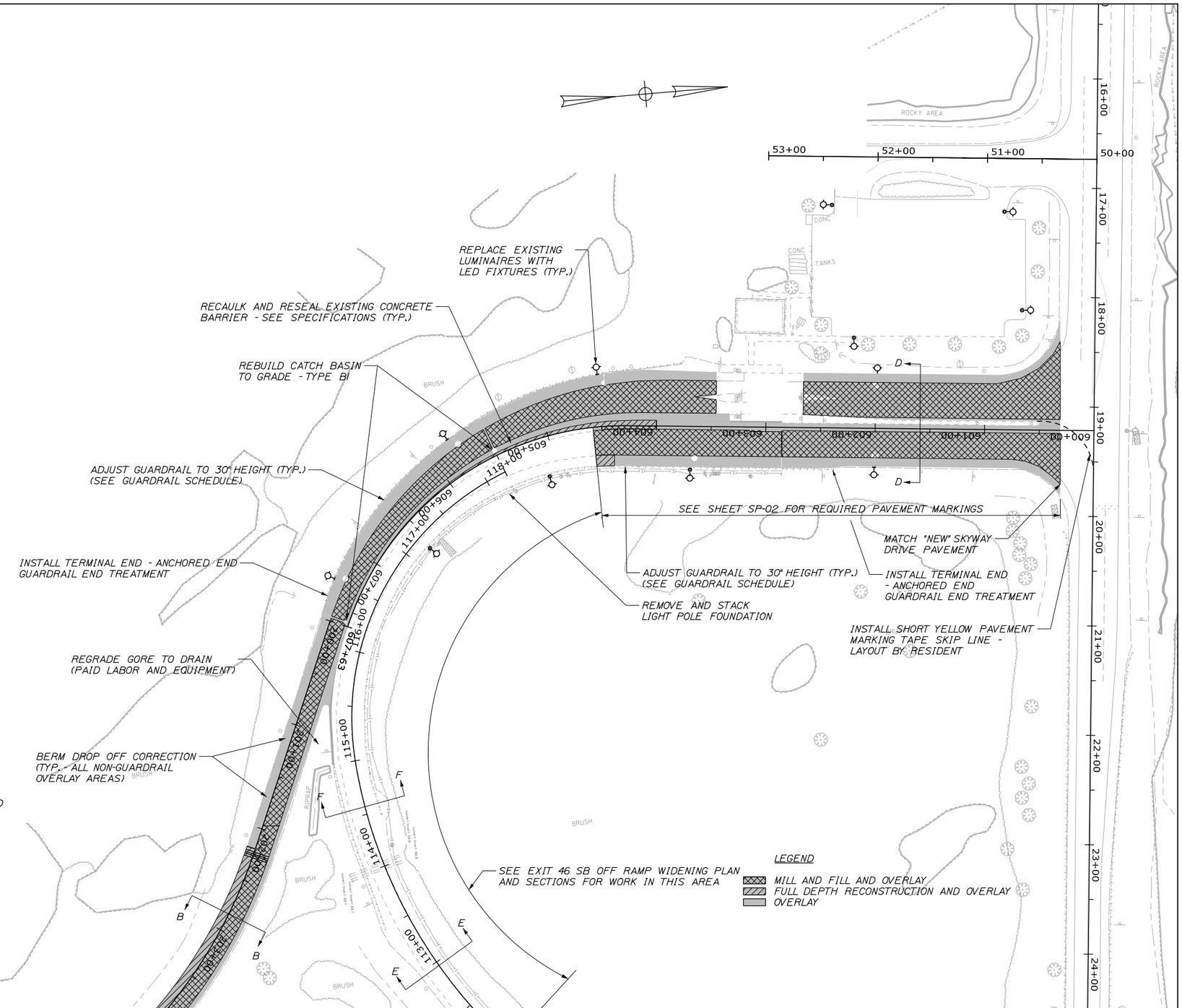

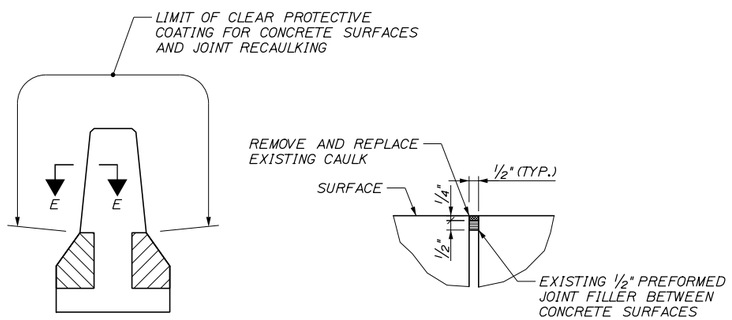

EXIT 46 RAMPS MEDIAN BARRIER
3/4" = 1'-0"

SECTION E-E
3" = 1'-0"

Date:1/23/2015

Filename: 035_Highway4.dgn

Scale: 50 0 50 100

No.	Revision	By	Date

Designed by: HNTB

CONSULTANT PROJECT MANAGER: Craig R. Morin, P.E.

	By	Date		By	Date
Designed	CAH	01/15	Checked	CRM	01/15
Drawn	MPC	01/15	In Charge of	RAL	01/15

HNTB CORPORATION
340 County Road, Suite 6-C
Westbrook, ME 04092
TEL (207) 774-5155
FAX (207) 228-0909

MAINE TURNPIKE

THE GOLD STAR MEMORIAL HIGHWAY

MTA PROJECT MANAGER: Ralph C. Norwood, IV, P.E., P.T.O.E.

BRIDGE REPAIRS
PAVEMENT REHABILITATION

EXIT 46 HIGHWAY PLAN 4

SHEET NUMBER: HP-04

CONTRACT:2015.03

Date:1/23/2015

INSTALL TERMINAL END - ANCHORED END GUARDRAIL END TREATMENT

INSTALL TRAFFIC PREEMPTION LOOPS PROIR TO OVERLAY PAVING

REHABILITATE SHOULDER PAVEMENT (FULL DEPTH)

BERM DROP OFF CORRECTION (TYP. - ALL NON-GUARDRAIL OVERLAY AREAS)

ADJUST GUARDRAIL TO 30" HEIGHT (TYP.) (SEE GUARDRAIL SCHEDULE)

RECAULK AND RESEAL EXISTING CONCRETE BARRIER - SEE SPECIFICATION (TYP.)

REBUILD CATCH BASIN TO GRADE - TYPE BI

ADJUST GUARDRAIL TO 30" HEIGHT (TYP.) (SEE GUARDRAIL SCHEDULE)

REPLACE EXISTING LUMINAIRES WITH LED FIXTURES (TYP.)

PAVING LIMIT

SEE EXIT 46 NB ON RAMP WIDENING PLAN AND SECTIONS FOR WORK IN THIS AREA

SKYWAY DRIVE (SEE NOTE 1)

SEE SHEET SP-02 FOR REQUIRED PAVEMENT MARKINGS

MATCH "NEW" SKYWAY DRIVE PAVEMENT

INSTALL TERMINAL END - ANCHORED END GUARDRAIL END TREATMENT

INSTALL SHORT YELLOW PAVEMENT MARKING TAPE SKIP LINES - LAYOUT BY RESIDENT

LEGEND

- MILL AND FILL AND OVERLAY
- FULL DEPTH RECONSTRUCTION AND OVERLAY
- OVERLAY

Filename: 036_Highway5.dgn

Scale: 50 0 50 100

No.	Revision	By	Date

Designed by: HNTB

CONSULTANT PROJECT MANAGER: Craig R. Morin, P.E.

	By	Date		By	Date
Designed	CAH	01/15	Checked	CRM	01/15
Drawn	MPC	01/15	In Charge of	RAL	01/15

HNTB CORPORATION
340 County Road, Suite 6-C
Westbrook, ME 04092
TEL (207) 774-5155
FAX (207) 228-0909

MAINE TURNPIKE

THE GOLD STAR MEMORIAL HIGHWAY

MTA PROJECT MANAGER: Ralph C. Norwood, IV, P.E., P.T.O.E.

BRIDGE REPAIRS
PAVEMENT REHABILITATION

EXIT 46 HIGHWAY PLAN 5

SHEET NUMBER: HP-05

CONTRACT:2015.03

Date:1/23/2015

PC = STA. 604+25.64

SEE HIGHWAY PLANS FOR SB OFF RAMP PAVING WORK

REMOVE GUARDRAIL AND PLACE WORK ZONE CRASH CUSHION TL-2

STA. 604+58, LT. END FULL DEPTH SHOULDER PAVEMENT RECONSTRUCTION SEE CROSS SECTIONS

EDGE OF SHOULDER MILLING

REMOVE AND STACK ABANDONED FOUNDATION

STA. 117+83, RT. END RAMP WIDENING SEE CROSS SECTIONS

ABANDON EXISTING ELECTRICAL CONDUIT AND WIRES. REMOVE AND RELOCATE JUNCTION BOXES, FRAMES, AND GRATES. BACKFILL AND COMPACT HOLES.

PULL EXISTING COMMUNICATION WIRE BACK. ABANDON EXISTING COMMUNICATION CONDUIT. REMOVE AND RELOCATE JUNCTION BOXES, FRAMES, AND GRATES. BACKFILL AND COMPACT HOLES.

REESTABLISH DRAIN WITH RIPRAP AFTER SHOULDER WIDENING

INSTALL NEW ELECTRICAL CONDUITS AND WIRES; INSTALL NEW COMMUNICATION CONDUIT AND EXISTING COMMUNICAITON WIRES; RESET JUNCTION BOXES, FRAMES AND GRATES.

REMOVE, MODIFY AND RESET GUARDRAIL TYPE 3d

EXISTING CONCRETE BARRIER

PCC = STA. 114+98.08

INSTALL R3-8 (MODIFIED) SIGN FURNISHED BY AUTHORITY

REMOVE AND RESET FLEAT 350 TO STA 113+00 RT

WIDEN SHOULDER FOR FLEAT 350 RESET

PCC = STA. 111+94.55

SEE HIGHWAY PLANS FOR SB OFF RAMP PAVING WORK

STA. 112+00, RT. BEGIN FULL DEPTH SHOULDER PAVEMENT RECONSTRUCTION AND RAMP WIDENING SEE CROSS SECTIONS

STA. 112+00, LT. BEGIN FULL DEPTH SHOULDER PAVEMENT RECONSTRUCTION SEE CROSS SECTIONS

STA. 115+00, LT. END FULL DEPTH SHOULDER PAVEMENT RECONSTRUCTION SEE CROSS SECTIONS

EXIT 46 SOUTHBOUND OFF-RAMP

EXIT 46 SOUTHBOUND ON-RAMP

LEGEND

- RAMP WIDENING
- OVERLAY
- MILL AND FILL AND OVERLAY
- FULL DEPTH RECONSTRUCTION AND OVERLAY

Filename: 037_WideningPlan01.dgn

Scale: 25 0 25 50 SCALE IN FEET

No.	Revision	By	Date

Designed by: HNTB

CONSULTANT PROJECT MANAGER: Craig R. Morin, P.E.

	By	Date		By	Date
Designed	CAH	01/15	Checked	CRM	01/15
Drawn	MPC	01/15	In Charge of	RAL	01/15

HNTB CORPORATION
340 County Road, Suite 6-C
Westbrook, ME 04092
TEL (207) 774-5155
FAX (207) 228-0909

MAINE TURNPIKE

THE GOLD STAR MEMORIAL HIGHWAY

MTA PROJECT MANAGER: Ralph C. Norwood, IV, P.E., P.T.O.E.

BRIDGE REPAIRS
PAVEMENT REHABILITATION
EXIT 46 SB OFF RAMP
WIDENING PLAN

SHEET NUMBER: WP-01

CONTRACT:2015.03

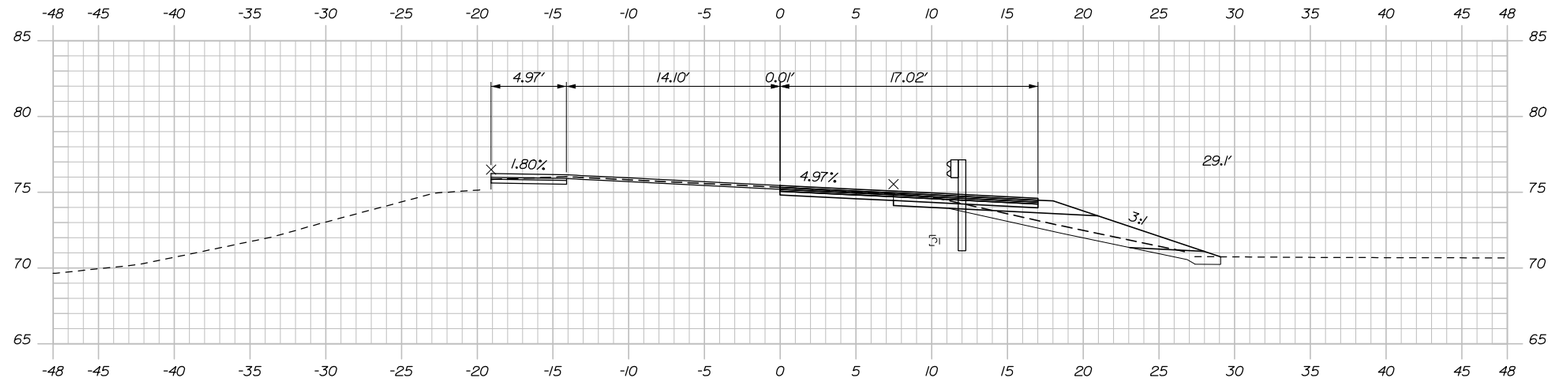

113+00.00

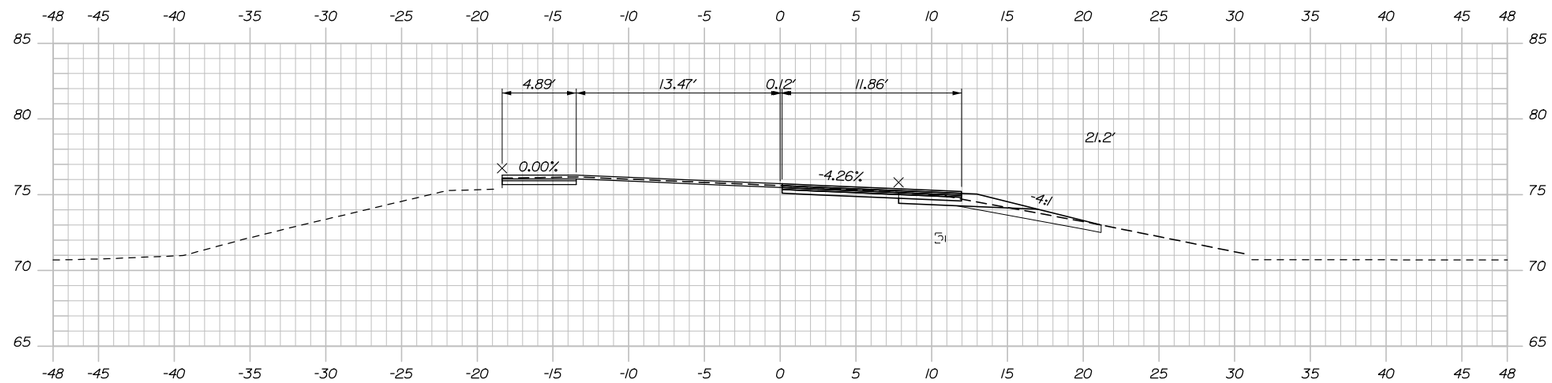

112+50.00

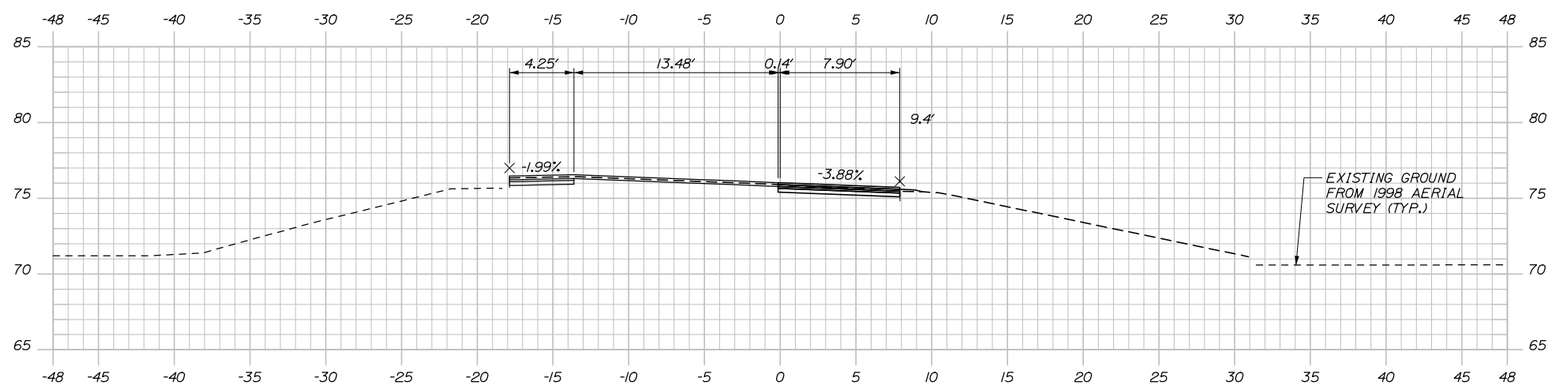

112+00.00

Date:1/23/2015

Filename: xsect.dgn

Scale:

No.	Revision	By	Date

Designed by:

HNTB

CONSULTANT PROJECT MANAGER: Craig R. Morin, P.E.

	By	Date		By	Date
Designed	CAH	01\15	Checked	CRM	01\15
Drawn	MPC	01\15	In Charge of	RAL	01\15

HNTB CORPORATION
340 County Road, Suite 6-C
Westbrook, ME 04092
TEL (207) 774-5155
FAX (207) 228-0909

MAINE TURNPIKE

THE GOLD STAR MEMORIAL HIGHWAY

MTA PROJECT MANAGER: Ralph C. Norwood, IV, P.E., P.T.O.E.

BRIDGE REPAIRS
PAVEMENT REHABILITATION

EXIT 46 SB OFF RAMP
CROSS SECTIONS

SHEET NUMBER: XS-01

CONTRACT:2015.03

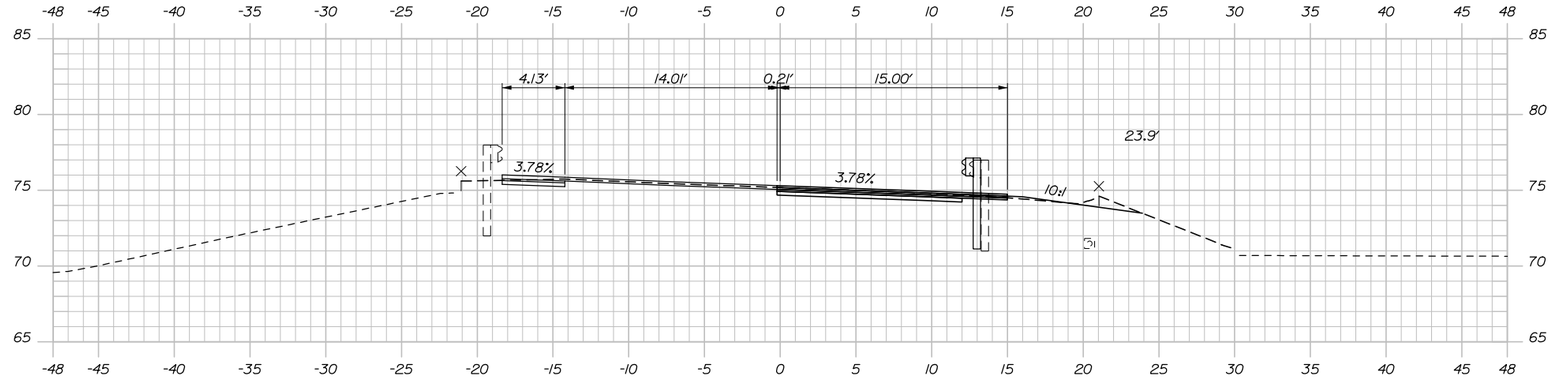

114+50.00

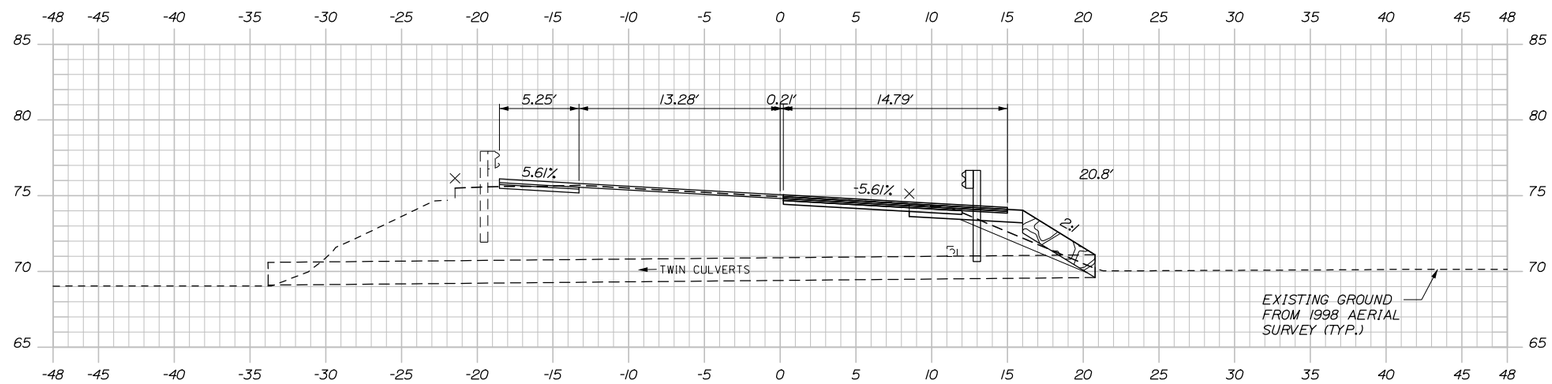

114+00.00

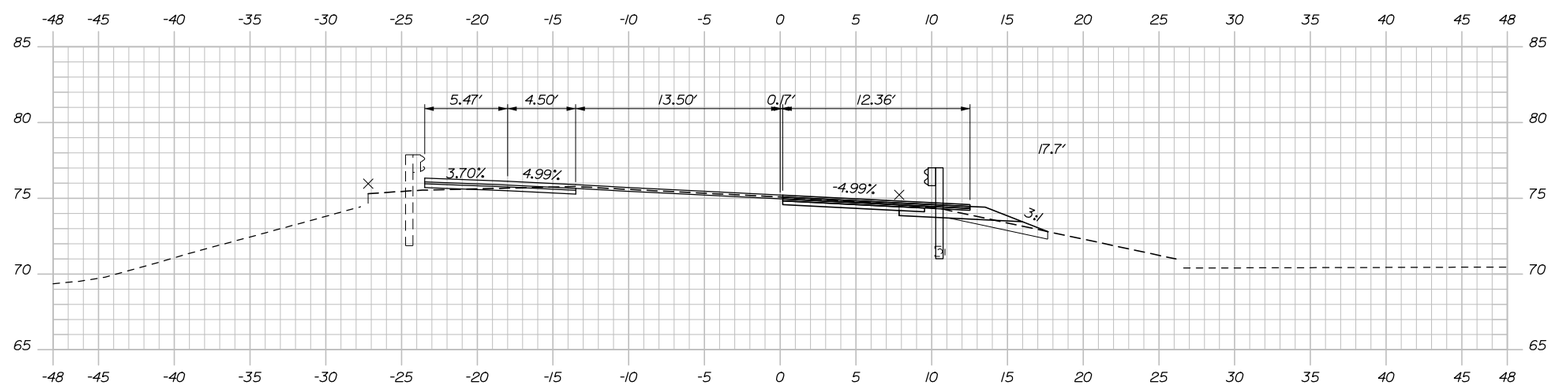

113+50.00

Date:1/23/2015

Filename: xsect.dgn

No.	Revision	By	Date

Scale:

Designed by:

HNTB

CONSULTANT PROJECT MANAGER: Craig R. Morin, P.E.

	By	Date		By	Date
Designed	CAH	01\15	Checked	CRM	01\15
Drawn	MPC	01\15	In Charge of	RAL	01\15

HNTB CORPORATION
340 County Road, Suite 6-C
Westbrook, ME 04092
TEL (207) 774-5155
FAX (207) 228-0909

MAINE TURNPIKE

THE GOLD STAR MEMORIAL HIGHWAY

MTA PROJECT MANAGER: Ralph C. Norwood, IV, P.E., P.T.O.E.

BRIDGE REPAIRS
PAVEMENT REHABILITATION

EXIT 46 SB OFF RAMP
CROSS SECTIONS

SHEET NUMBER: XS-02

CONTRACT:2015.03

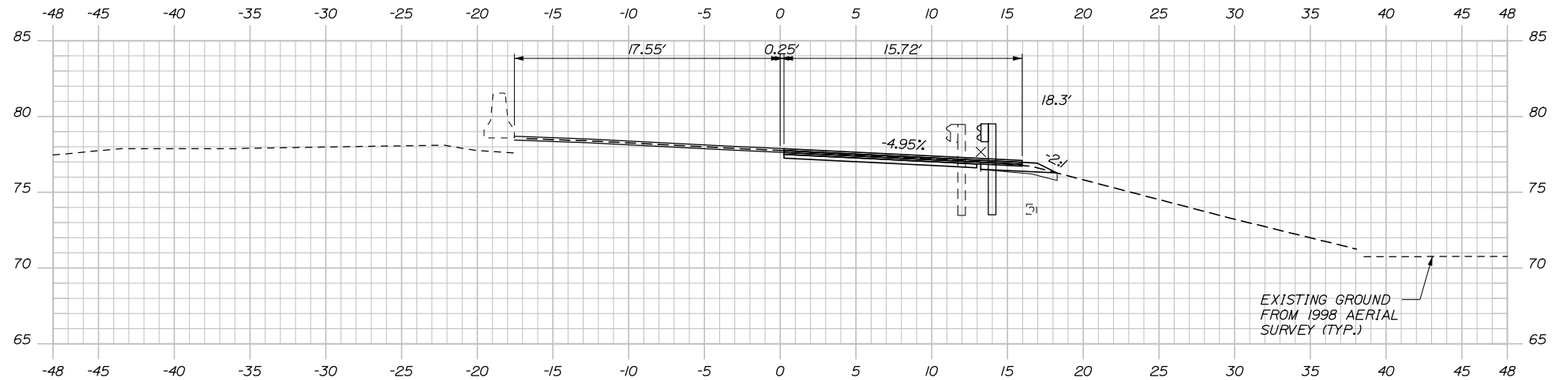

116+00.00

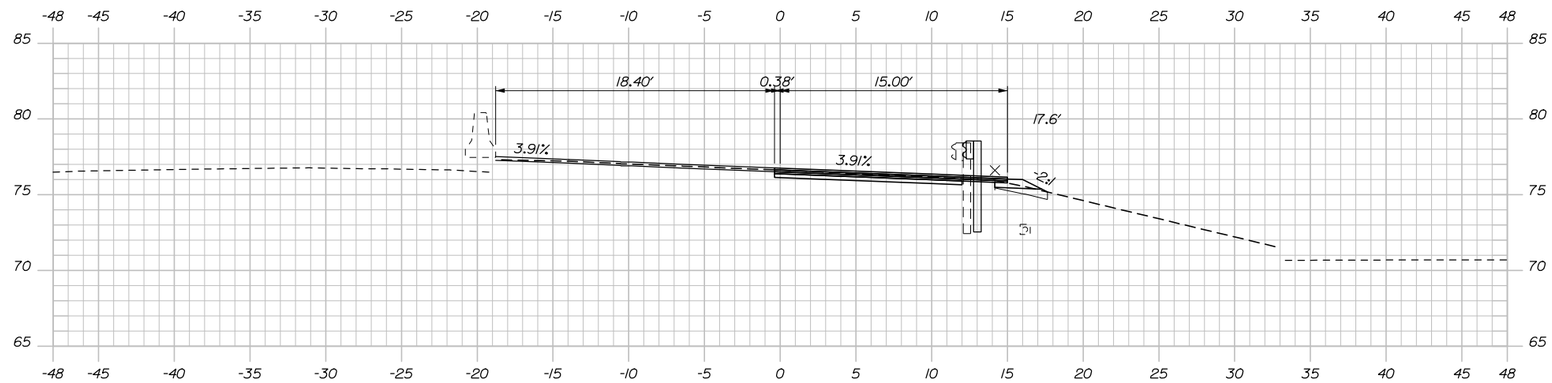

115+50.00

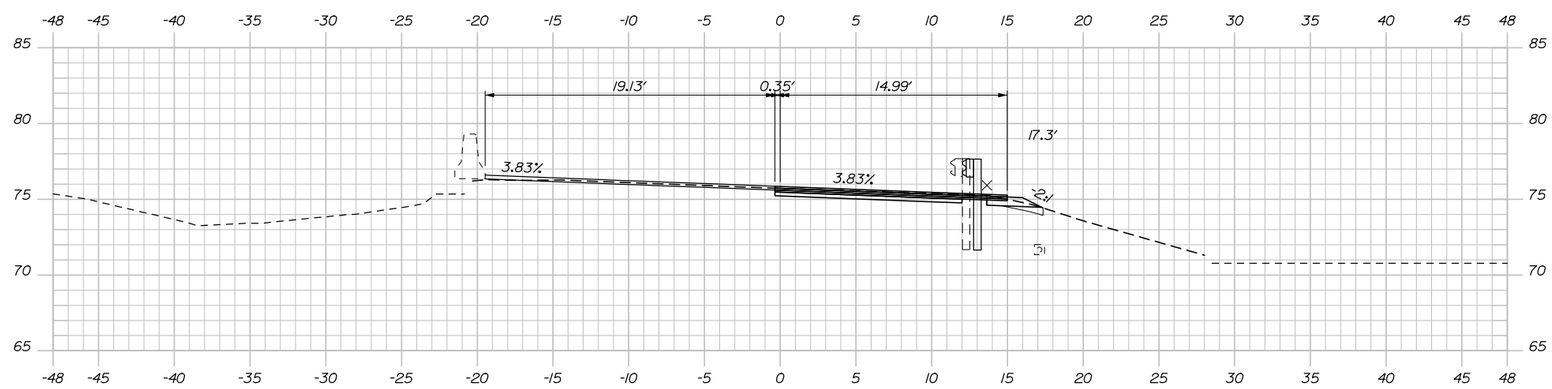

115+00.00

Date:1/23/2015

Filename: xsect.dgn

Scale:

No.	Revision	By	Date

Designed by:

HNTB

CONSULTANT PROJECT MANAGER: Craig R. Morin, P.E.

	By	Date		By	Date
Designed	CAH	01\15	Checked	CRM	01\15
Drawn	MPC	01\15	In Charge of	RAL	01\15

HNTB CORPORATION
340 County Road, Suite 6-C
Westbrook, ME 04092
TEL (207) 774-5155
FAX (207) 228-0909

MAINE TURNPIKE

THE GOLD STAR MEMORIAL HIGHWAY

MTA PROJECT MANAGER: Ralph C. Norwood, IV, P.E., P.T.O.E.

BRIDGE REPAIRS
PAVEMENT REHABILITATION

EXIT 46 SB OFF RAMP
CROSS SECTIONS

SHEET NUMBER: XS-03

CONTRACT:2015.03

Date:1/23/2015

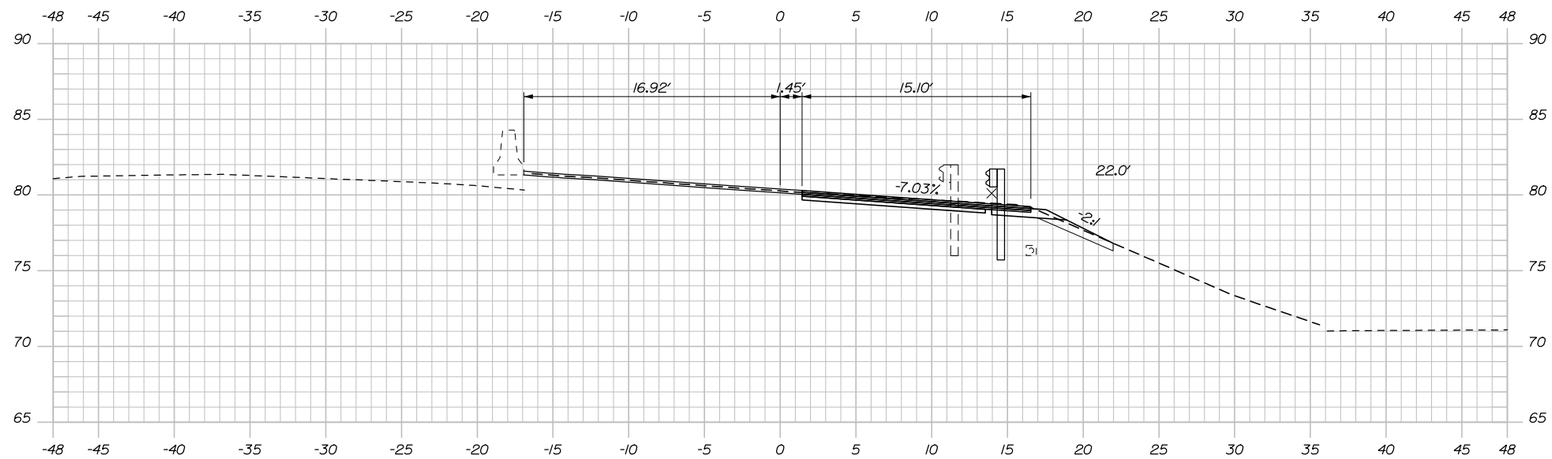

117+00.00

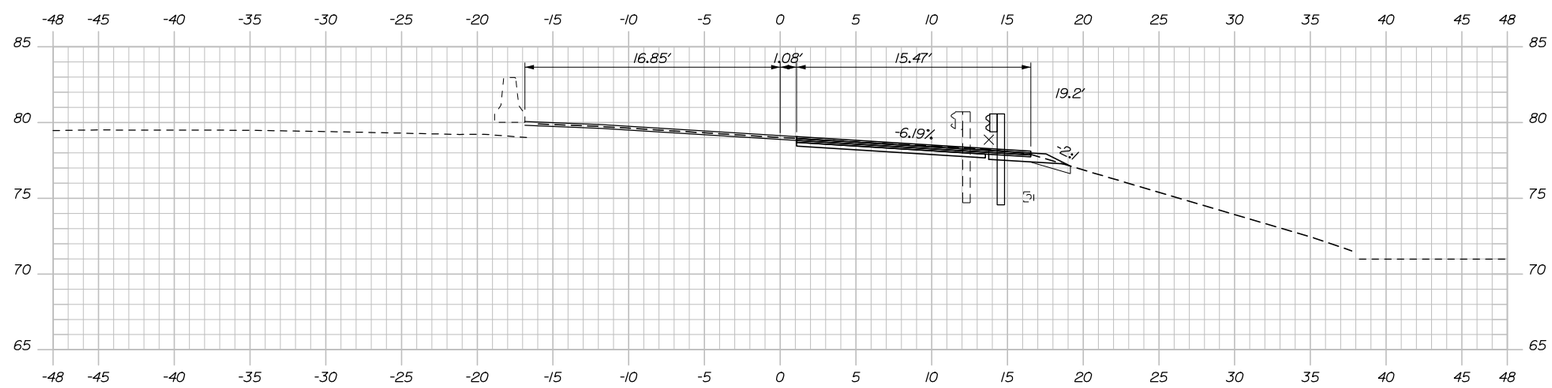

116+50.00

Scale:			
No.	Revision	By	Date

Designed by:

HNTB

CONSULTANT PROJECT MANAGER: Craig R. Morin, P.E.

	By	Date		By	Date
Designed	CAH	01\15	Checked	CRM	01\15
Drawn	MPC	01\15	In Charge of	RAL	01\15

HNTB CORPORATION
340 County Road, Suite 6-C
Westbrook, ME 04092
TEL (207) 774-5155
FAX (207) 228-0909

MAINE TURNPIKE

THE GOLD STAR MEMORIAL HIGHWAY

MTA PROJECT MANAGER: Ralph C. Norwood, IV, P.E., P.T.O.E.

BRIDGE REPAIRS
PAVEMENT REHABILITATION

EXIT 46 SB OFF RAMP
CROSS SECTIONS

SHEET NUMBER: XS-04

CONTRACT:2015.03

Filename: xsect.dgn

Date:1/23/2015

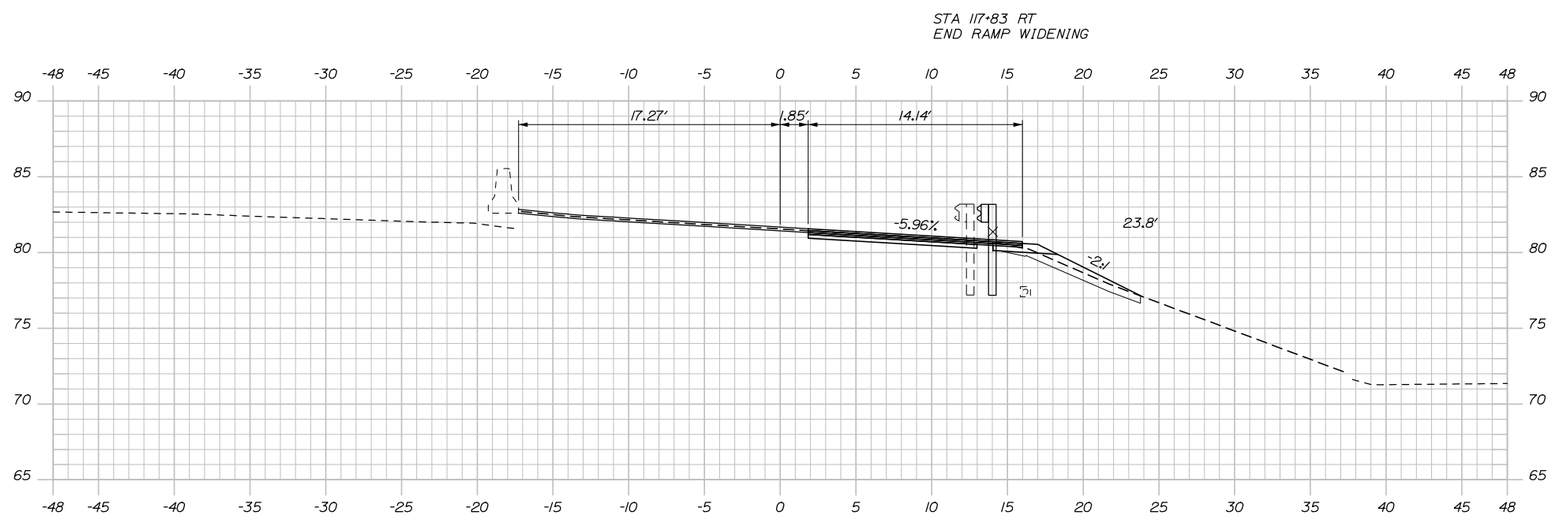

117+50.00

Scale:

No.	Revision	By	Date

Designed by:

HNTB

CONSULTANT PROJECT MANAGER: Craig R. Morin, P.E.

	By	Date		By	Date
Designed	CAH	01\15	Checked	CRM	01\15
Drawn	MPC	01\15	In Charge of	RAL	01\15

HNTB CORPORATION
340 County Road, Suite 6-C
Westbrook, ME 04092
TEL (207) 774-5155
FAX (207) 228-0909

MAINE TURNPIKE

THE GOLD STAR MEMORIAL HIGHWAY

MTA PROJECT MANAGER: Ralph C. Norwood, IV, P.E., P.T.O.E.

BRIDGE REPAIRS
PAVEMENT REHABILITATION

EXIT 46 SB OFF RAMP
CROSS SECTIONS

SHEET NUMBER: XS-05

CONTRACT:2015.03

Filename: xsect.dgn

Date:1/23/2015

MAINE TURNPIKE SOUTHBOUND

MAINE TURNPIKE NORTHBOUND

PT = STA. 405+56.83

EXIT 46 NORTHBOUND ON-RAMP

405+00

406+00

407+00

408+00

409+00

410+00

411+00

EXIT 46 ON-RAMP

SKYWAY DRIVE

PC = STA. 409+48.90

PT = STA. 412+15.80

STA. 406+48, RT.
END RAMP WIDENING

SEE HIGHWAY PLANS
FOR NB ON RAMP
PAVING WORK

INSTALL NEW CONDUITS AND WIRES. RESET JUNCTION BOXES, FRAMES, AND GRATES.

ABANDON EXISTING CONDUIT AND WIRES. REMOVE AND RELOCATE JUNCTION BOXES, FRAMES, AND GRATES. BACKFILL AND COMPACT HOLES.

EDGE OF SHOULDER MILLING

REMOVE AND RESET EXISTING LIGHT FOUNDATIONS, POLES, AND MAST ARMS. (TYP.) (SEE NOTE 3)

PC = STA. 400+00.00

EXTEND EXISTING 30" RCP CULVERTS (SEE NOTE 2)

STA. 503+04.5, RT.
LIMIT OF RAMP WIDENING

FUTURE PLAZA WORK (SEE NOTE 1)

STA. 502+46.5, RT.
LIMIT OF RAMP WIDENING

STA. 500+29, RT.
BEGIN RAMP WIDENING

OVERLAY EMPLOYEE PARKING AREA

SEE HIGHWAY PLANS
FOR INTERCHANGE
PAVING WORK

630' DEPARTURE TRANSITION ZONE

400+00

401+00

402+00

403+00

504+00

503+00

502+00

501+00

500+00

PT = STA. 504+95.88

200' DEPARTURE RECOVERY ZONE

PC=STA. 503+10.81

LEGEND

RAMP WIDENING
OVERLAY
MILL AND FILL AND OVERLAY

NOTES:

1. WORK WITHIN THE FUTURE PLAZA WORK ZONE IS LIMITED TO ELECTRICAL CONDUIT, WIRE, AND JUNCTION BOX RELOCATIONS. ACCESS TO TOLL PLAZA SHALL BE MAINTAINED AT ALL TIMES.

2. AT CONTRACTOR'S OPTION THE RCP PIPE EXTENSIONS MAY BE MADE WITH ADS HDPE DUAL WALL PIPE ADAPTORS, ADS HDPE DUAL WALL PIPE, AND CONCRETE COLLARS. SEE SPECIFICAITONS.

3. EXISTING LIGHT FOUNDATIONS, POLES, AND MAST ARMS SHALL BE RELOCATED AT THEIR EXISTING STATIONS AND AT A NEW OFFSET IN ACCORDANCE WITH THE DETAILS AND SPECIFICATIONS. EXISTING LIGHT FOUNDATIONS, POLES, AND MAST ARMS TO BE RELOCATED ARE LOCATED AT STA 501+65 RT, STA 503+50 RT, 504+50 RT, 400+60 RT, AND 401+60 RT.

Filename: 043_WideningPlan02.dgn

Scale: 40 0 40 80
SCALE IN FEET

No.	Revision	By	Date

Designed by:

HNTB

CONSULTANT PROJECT MANAGER: Craig R. Morin, P.E.

	By	Date		By	Date
Designed	CAH	01/15	Checked	CRM	01/15
Drawn	MPC	01/15	In Charge of	RAL	01/15

HNTB CORPORATION
340 County Road, Suite 6-C
Westbrook, ME 04092
TEL (207) 774-5155
FAX (207) 228-0909

MAINE TURNPIKE

THE GOLD STAR MEMORIAL HIGHWAY

MTA PROJECT MANAGER: Ralph C. Norwood, IV, P.E., P.T.O.E.

BRIDGE REPAIRS
PAVEMENT REHABILITATION

EXIT 46 NB ON RAMP
WIDENING PLAN

SHEET NUMBER: WP-02

CONTRACT:2015.03

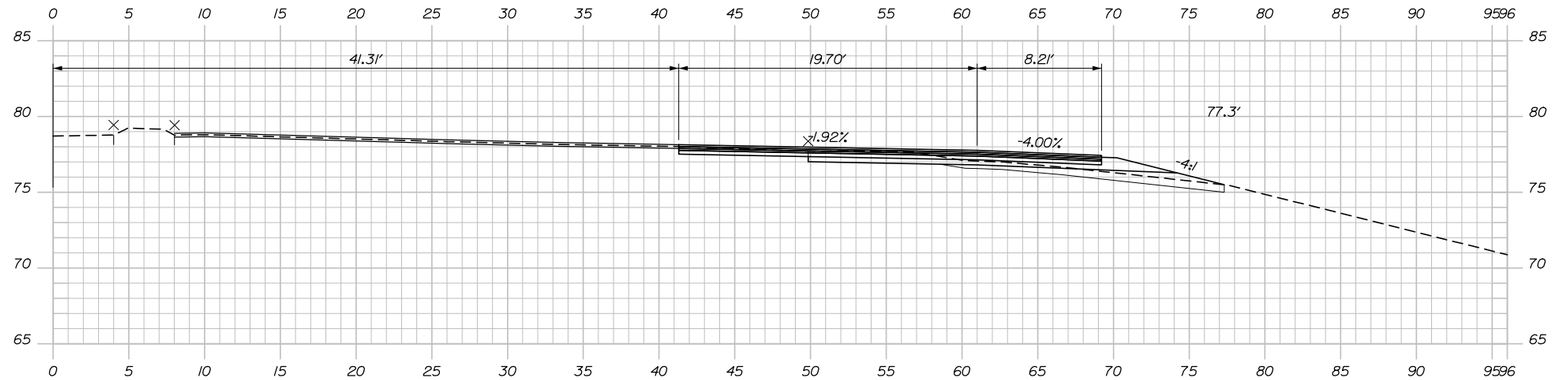

501+50.00

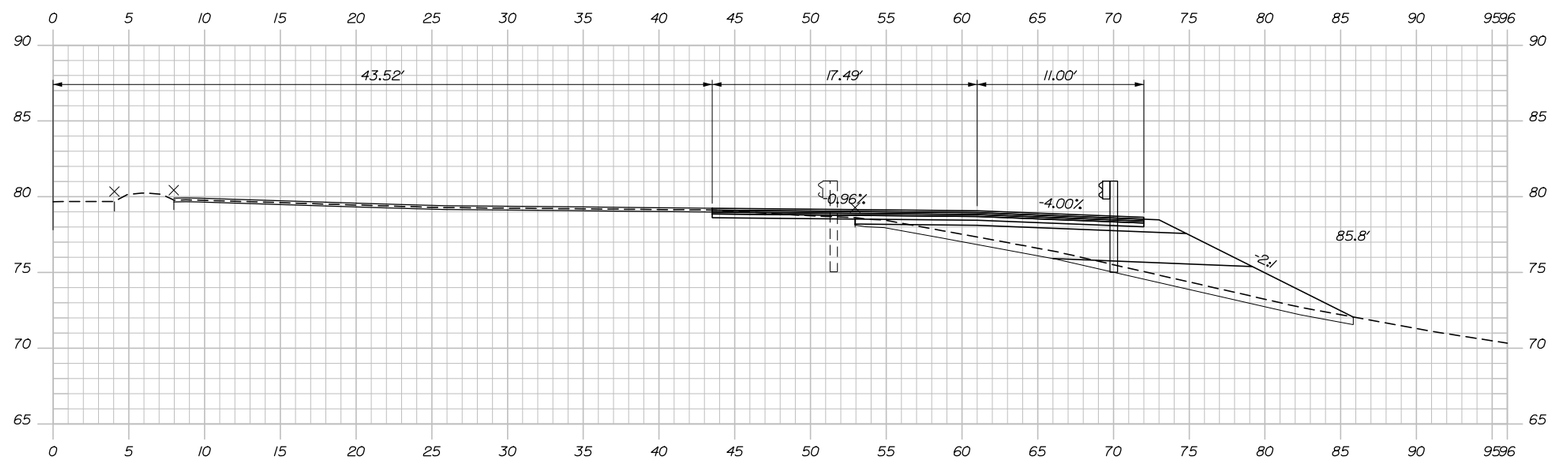

501+00.00

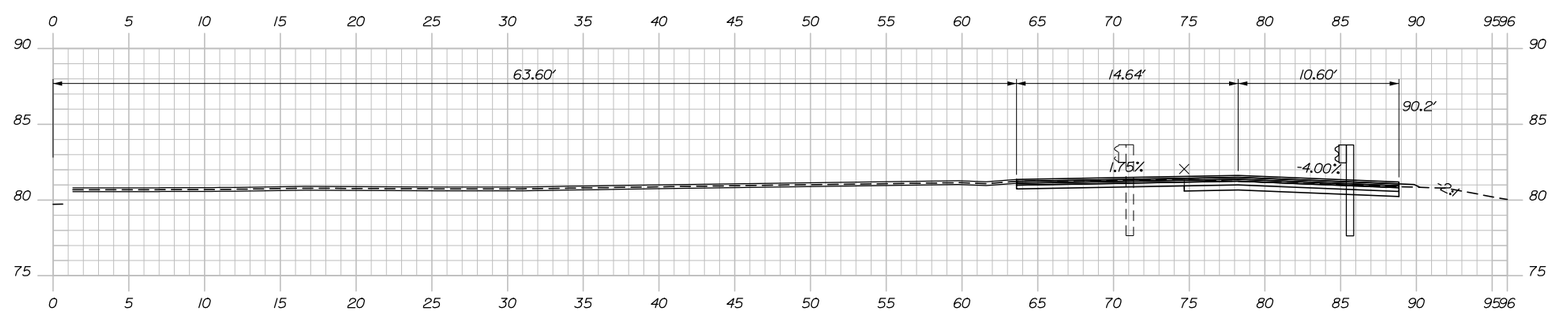

500+50.00

Date:1/23/2015

Filename: xsect.dgn

Scale:

No.	Revision	By	Date

Designed by:

HNTB

CONSULTANT PROJECT MANAGER: Craig R. Morin, P.E.

	By	Date		By	Date
Designed	CAH	01\15	Checked	CRM	01\15
Drawn	MPC	01\15	In Charge of	RAL	01\15

HNTB CORPORATION
340 County Road, Suite 6-C
Westbrook, ME 04092
TEL (207) 774-5155
FAX (207) 228-0909

MAINE TURNPIKE

THE GOLD STAR MEMORIAL HIGHWAY

MTA PROJECT MANAGER: Ralph C. Norwood, IV, P.E., P.T.O.E.

BRIDGE REPAIRS
PAVEMENT REHABILITATION

EXIT 46 NB ON RAMP
CROSS SECTIONS

SHEET NUMBER: XS-06

CONTRACT:2015.03

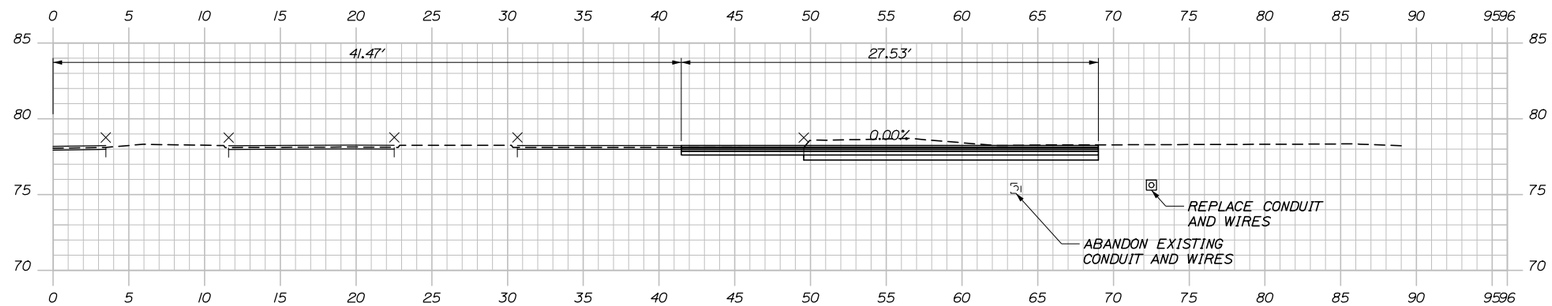

503+05.00

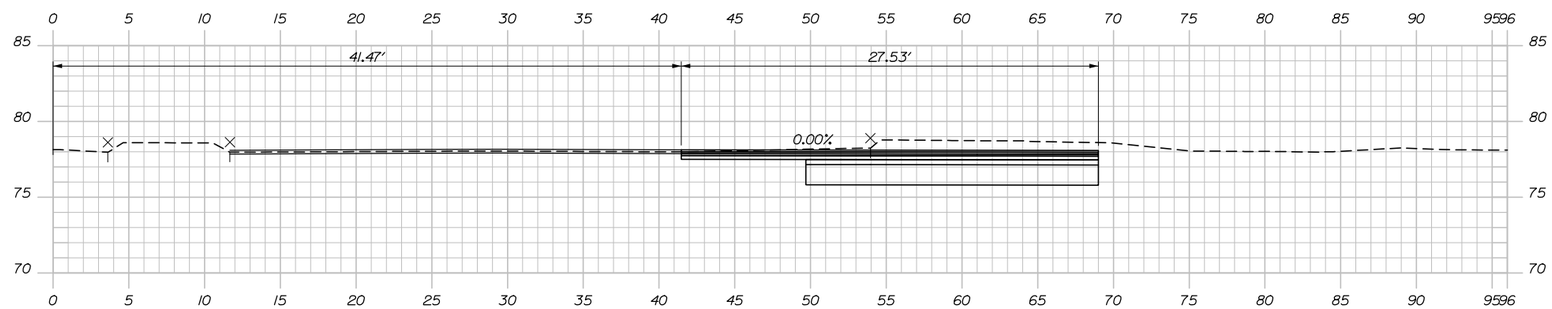

502+41.00

STA 502+41 TO 503+05 RT
FUTURE PLAZA WORK. NO EXCAVATION OR PAVING IN THIS AREA; RESIDENT MAY ADJUST ACTUAL LIMITS. SEE PLAN FOR MORE INFORMATION.

STA 502+30 TO 502+41 RT
BOX CUT TO MATCH EXISTING TYPE A AND TYPE D GRAVEL DEPTHS.

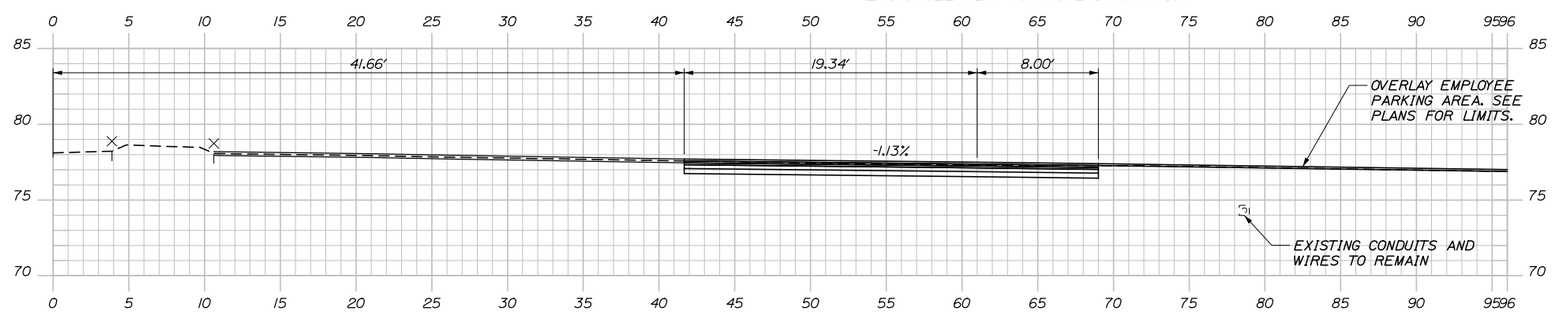

502+00.00

Date:1/23/2015

Filename: xsect.dgn

Scale:

No.	Revision	By	Date

Designed by:

HNTB

CONSULTANT PROJECT MANAGER: Craig R. Morin, P.E.

	By	Date		By	Date
Designed	CAH	01\15	Checked	CRM	01\15
Drawn	MPC	01\15	In Charge of	RAL	01\15

HNTB CORPORATION
340 County Road, Suite 6-C
Westbrook, ME 04092
TEL (207) 774-5155
FAX (207) 228-0909

MAINE TURNPIKE

THE GOLD STAR MEMORIAL HIGHWAY

MTA PROJECT MANAGER: Ralph C. Norwood, IV, P.E., P.T.O.E.

BRIDGE REPAIRS
PAVEMENT REHABILITATION
EXIT 46 NB ON RAMP
CROSS SECTIONS

SHEET NUMBER: XS-07

CONTRACT:2015.03

Date:1/23/2015

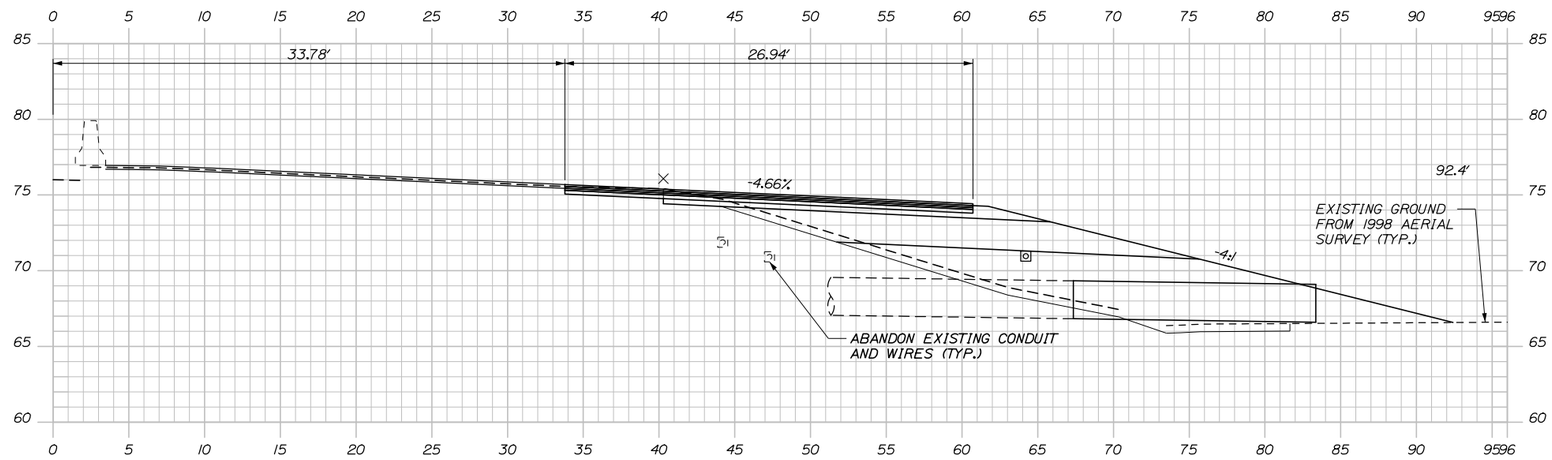

504+00.00

STA 504+20 RT
EXTEND EXISTING 30" RCP CULVERTS (2); MATCH EXISTING PIPE SLOPE

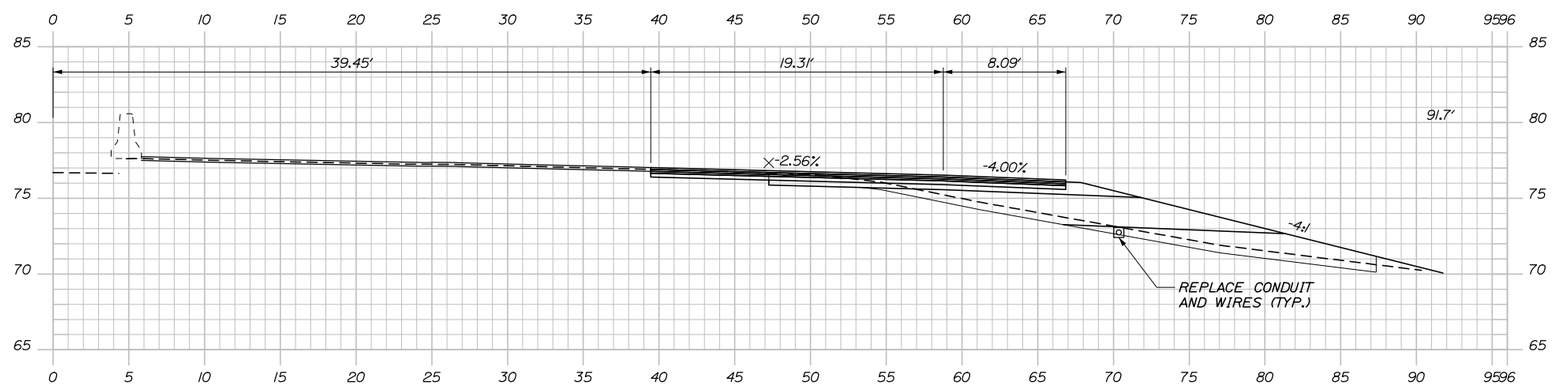

503+50.00

Scale:

No.	Revision	By	Date

Designed by:

HNTB

CONSULTANT PROJECT MANAGER: Craig R. Morin, P.E.

	By	Date		By	Date
Designed	CAH	01\15	Checked	CRM	01\15
Drawn	MPC	01\15	In Charge of	RAL	01\15

HNTB CORPORATION
340 County Road, Suite 6-C
Westbrook, ME 04092
TEL (207) 774-5155
FAX (207) 228-0909

MAINE TURNPIKE

THE GOLD STAR MEMORIAL HIGHWAY

MTA PROJECT MANAGER: Ralph C. Norwood, IV, P.E., P.T.O.E.

BRIDGE REPAIRS
PAVEMENT REHABILITATION

EXIT 46 NB ON RAMP
CROSS SECTIONS

SHEET NUMBER: XS-08

CONTRACT:2015.03

Filename: xsect.dgn

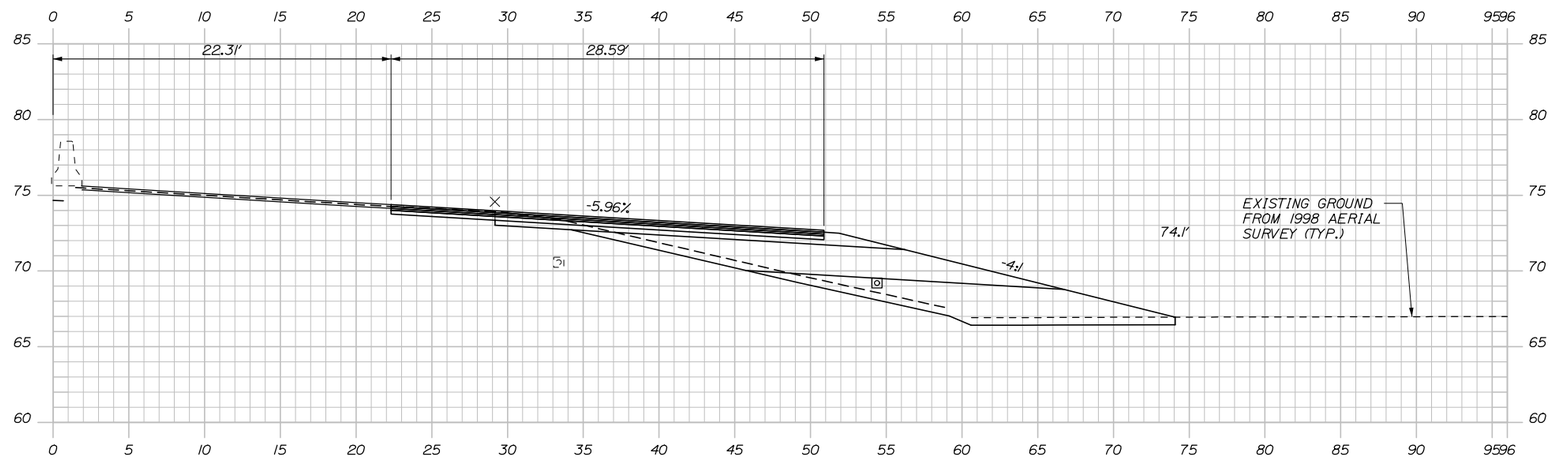

504+95.88

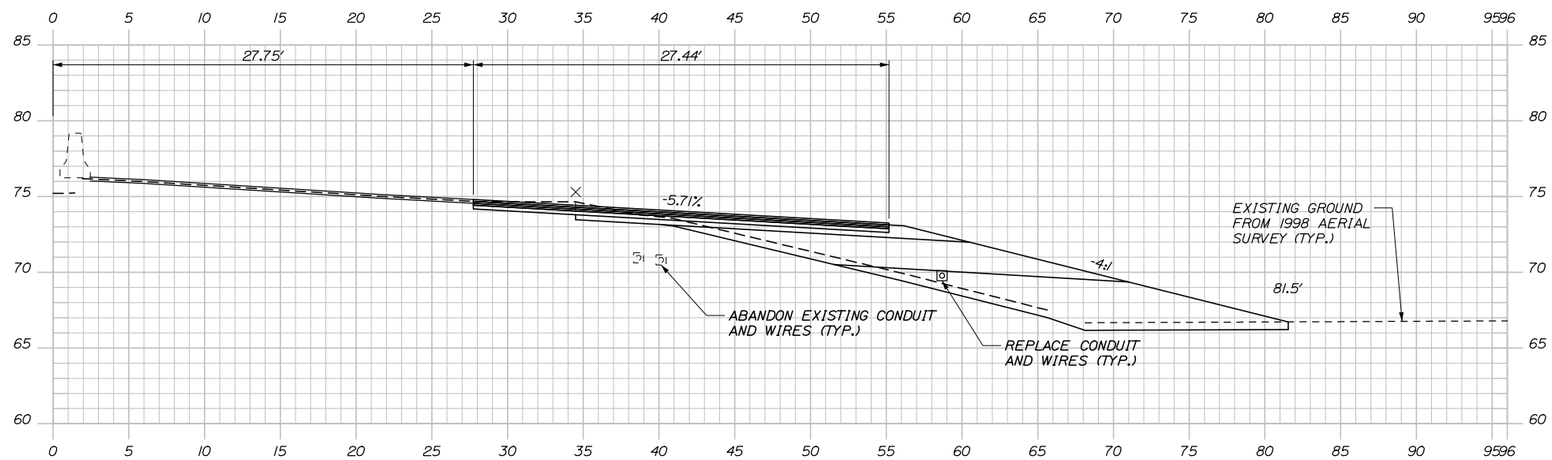

504+50.00

Date:1/23/2015

Filename: xsect.dgn

Scale:

No.	Revision	By	Date

Designed by:

HNTB

CONSULTANT PROJECT MANAGER: Craig R. Morin, P.E.

	By	Date		By	Date
Designed	CAH	01\15	Checked	CRM	01\15
Drawn	MPC	01\15	In Charge of	RAL	01\15

HNTB CORPORATION
340 County Road, Suite 6-C
Westbrook, ME 04092
TEL (207) 774-5155
FAX (207) 228-0909

MAINE TURNPIKE

THE GOLD STAR MEMORIAL HIGHWAY

MTA PROJECT MANAGER: Ralph C. Norwood, IV, P.E., P.T.O.E.

BRIDGE REPAIRS
PAVEMENT REHABILITATION

EXIT 46 NB ON RAMP
CROSS SECTIONS

SHEET NUMBER: XS-09

CONTRACT:2015.03

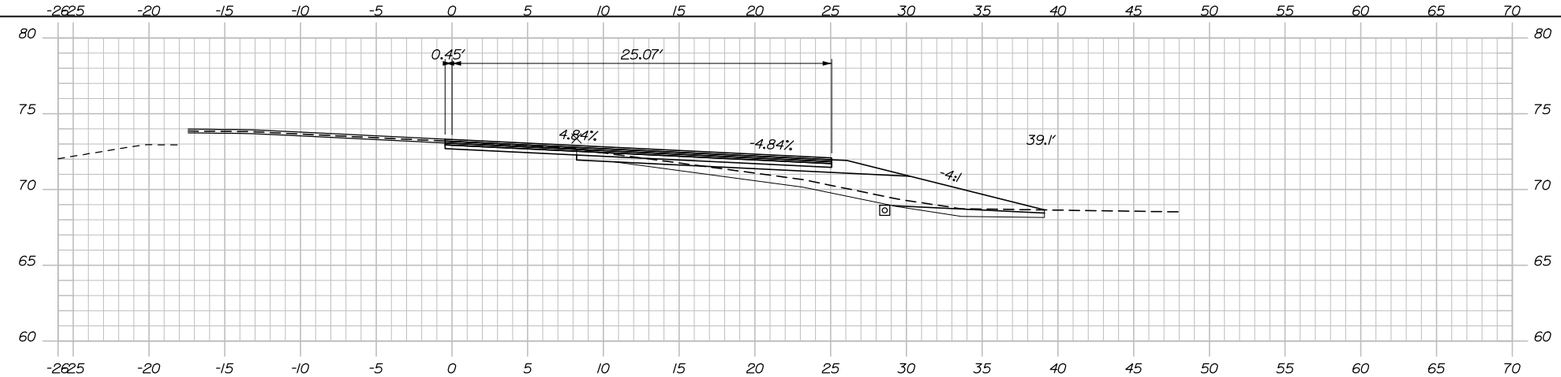

401+00.00

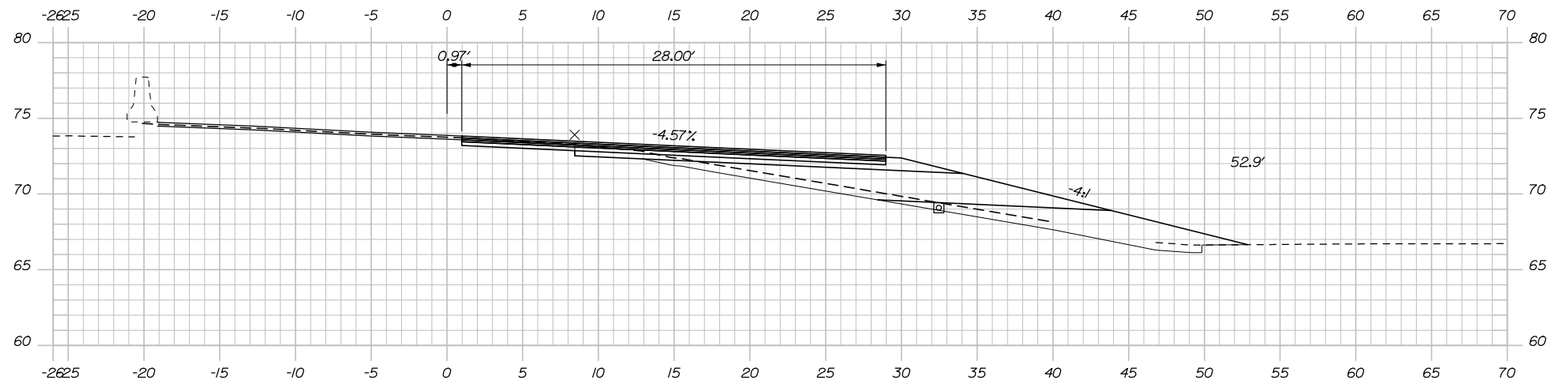

400+50.00

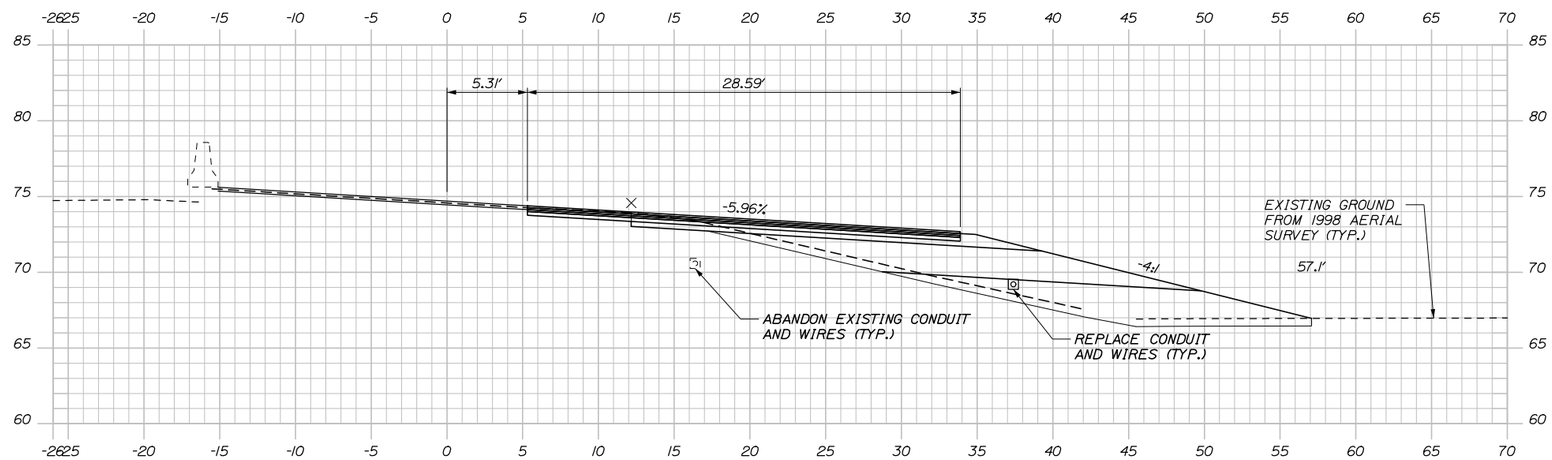

400+00.00

Date:1/23/2015

Filename: xsect.dgn

Scale:			
No.	Revision	By	Date

Designed by:

HNTB

CONSULTANT PROJECT MANAGER: Craig R. Morin, P.E.

	By	Date		By	Date
Designed	CAH	01\15	Checked	CRM	01\15
Drawn	MPC	01\15	In Charge of	RAL	01\15

HNTB CORPORATION
340 County Road, Suite 6-C
Westbrook, ME 04092
TEL (207) 774-5155
FAX (207) 228-0909

MAINE TURNPIKE

THE GOLD STAR MEMORIAL HIGHWAY

MTA PROJECT MANAGER: Ralph C. Norwood, IV, P.E., P.T.O.E.

BRIDGE REPAIRS
PAVEMENT REHABILITATION

EXIT 46 NB ON RAMP
CROSS SECTIONS

SHEET NUMBER: XS-10

CONTRACT:2015.03

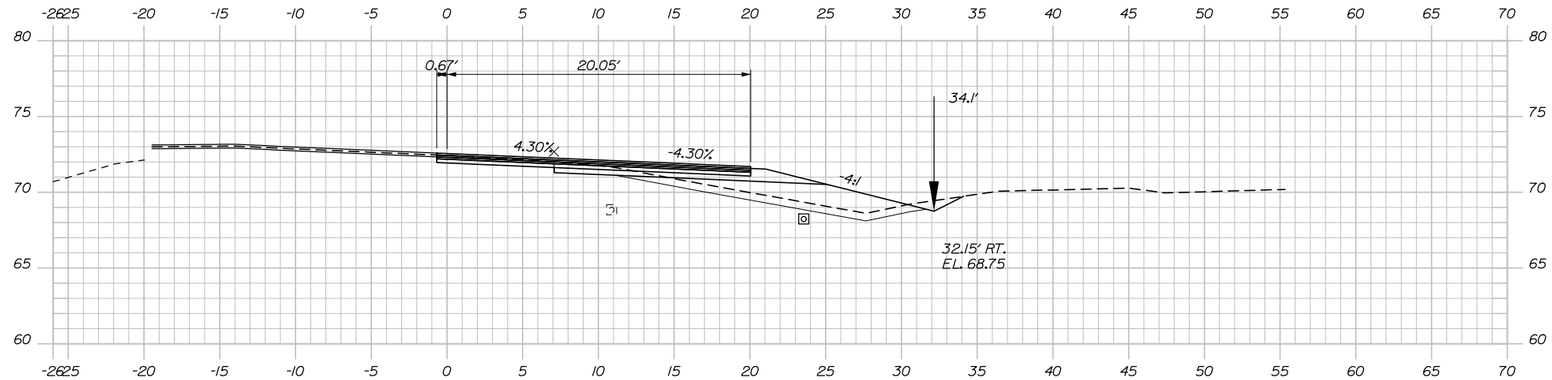

402+50.00

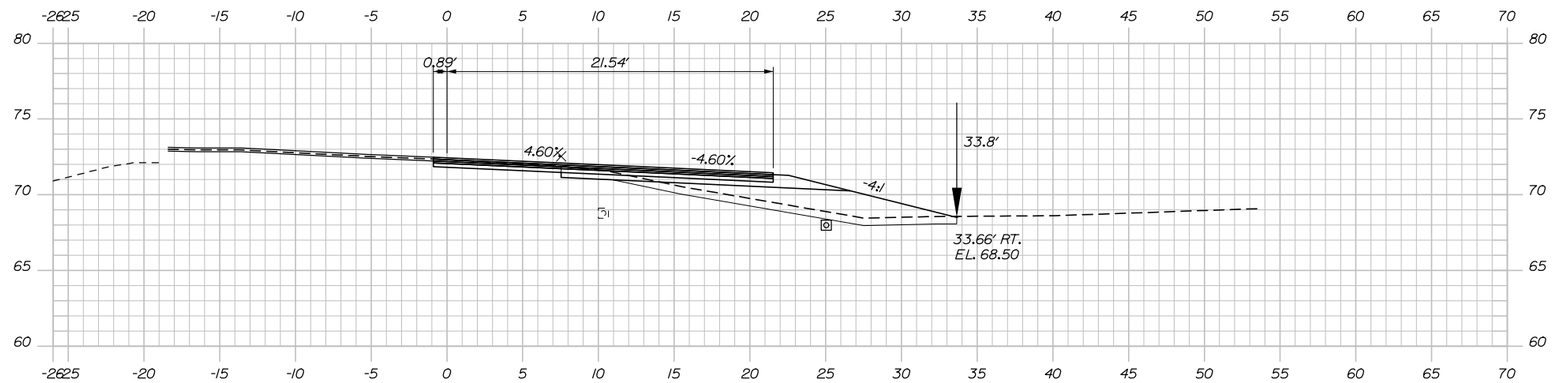

402+00.00

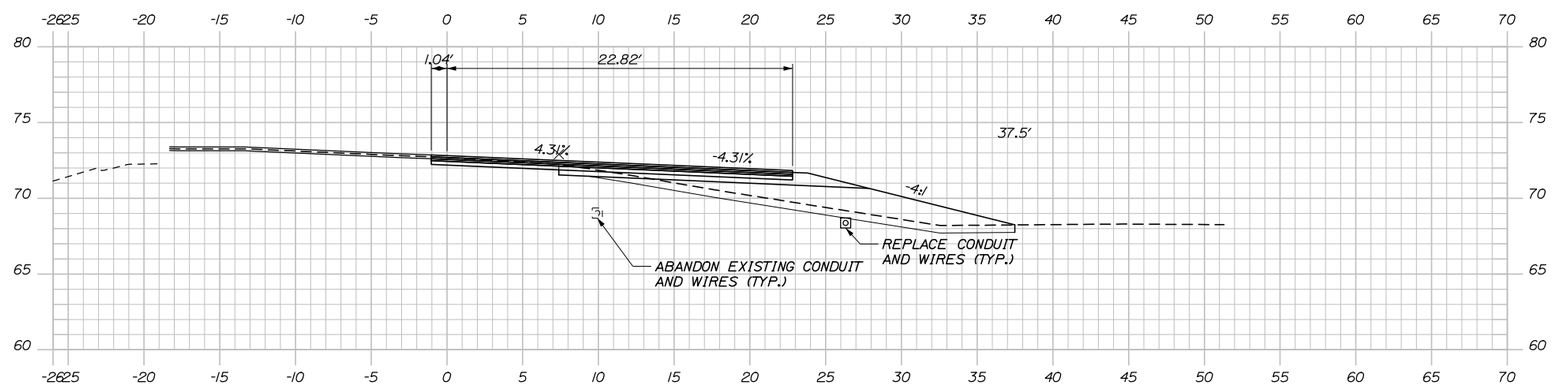

401+50.00

Date:1/23/2015

Filename: xsect.dgn

Scale:

No.	Revision	By	Date

Designed by:

HNTB

CONSULTANT PROJECT MANAGER: Craig R. Morin, P.E.

	By	Date		By	Date
Designed	CAH	01\15	Checked	CRM	01\15
Drawn	MPC	01\15	In Charge of	RAL	01\15

HNTB CORPORATION
340 County Road, Suite 6-C
Westbrook, ME 04092
TEL (207) 774-5155
FAX (207) 228-0909

MAINE TURNPIKE

THE GOLD STAR MEMORIAL HIGHWAY

MTA PROJECT MANAGER: Ralph C. Norwood, IV, P.E., P.T.O.E.

BRIDGE REPAIRS
PAVEMENT REHABILITATION

EXIT 46 NB ON RAMP
CROSS SECTIONS

SHEET NUMBER: XS-11

CONTRACT:2015.03

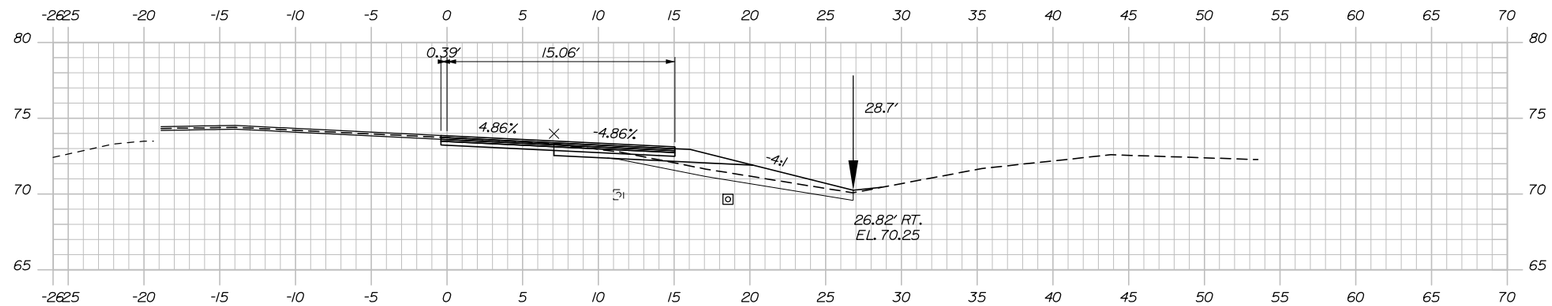

404+00.00

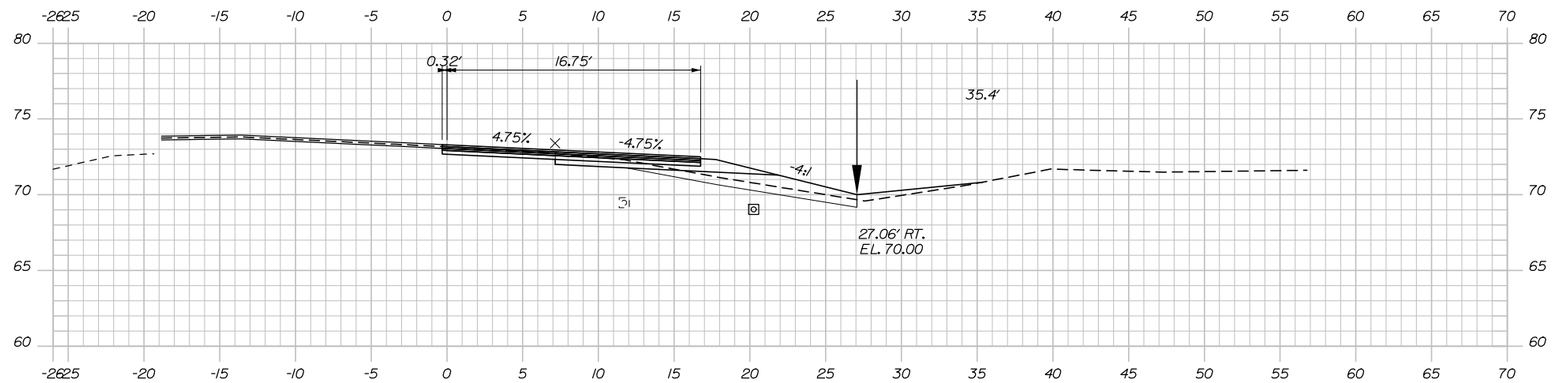

403+50.00

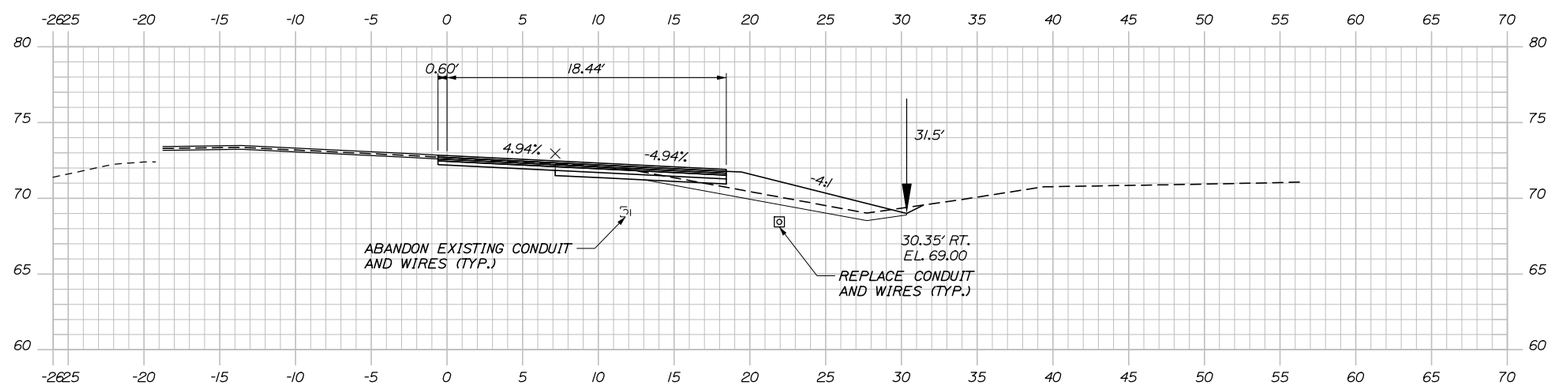

403+00.00

Date:1/23/2015

Filename: xsect.dgn

Scale:

No.	Revision	By	Date

Designed by:

HNTB

CONSULTANT PROJECT MANAGER: Craig R. Morin, P.E.

	By	Date		By	Date
Designed	CAH	01\15	Checked	CRM	01\15
Drawn	MPC	01\15	In Charge of	RAL	01\15

HNTB CORPORATION
340 County Road, Suite 6-C
Westbrook, ME 04092
TEL (207) 774-5155
FAX (207) 228-0909

MAINE TURNPIKE

THE GOLD STAR MEMORIAL HIGHWAY

MTA PROJECT MANAGER: Ralph C. Norwood, IV, P.E., P.T.O.E.

BRIDGE REPAIRS
PAVEMENT REHABILITATION

EXIT 46 NB ON RAMP
CROSS SECTIONS

SHEET NUMBER: XS-12

CONTRACT:2015.03

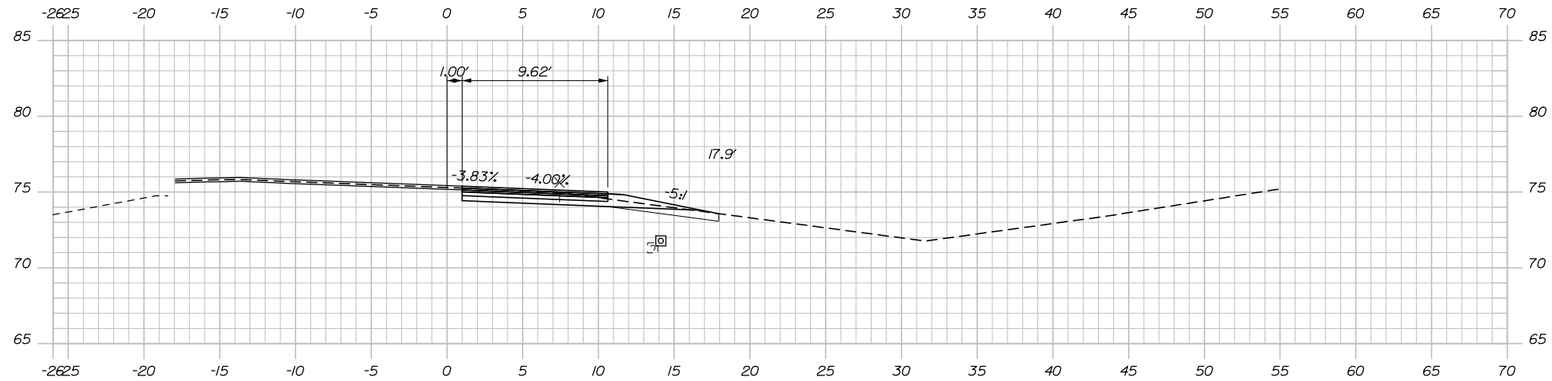

405+50.00

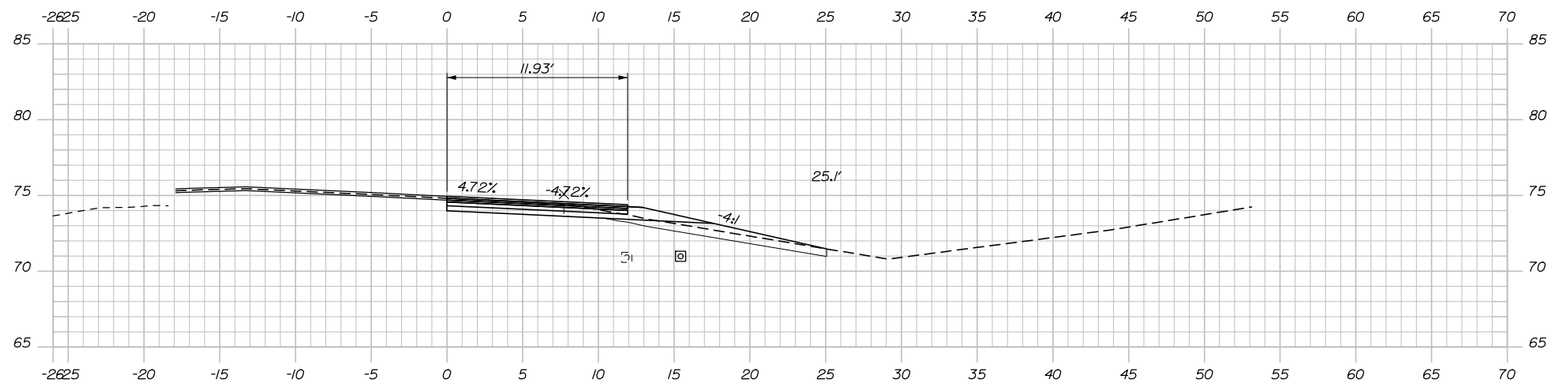

405+00.00

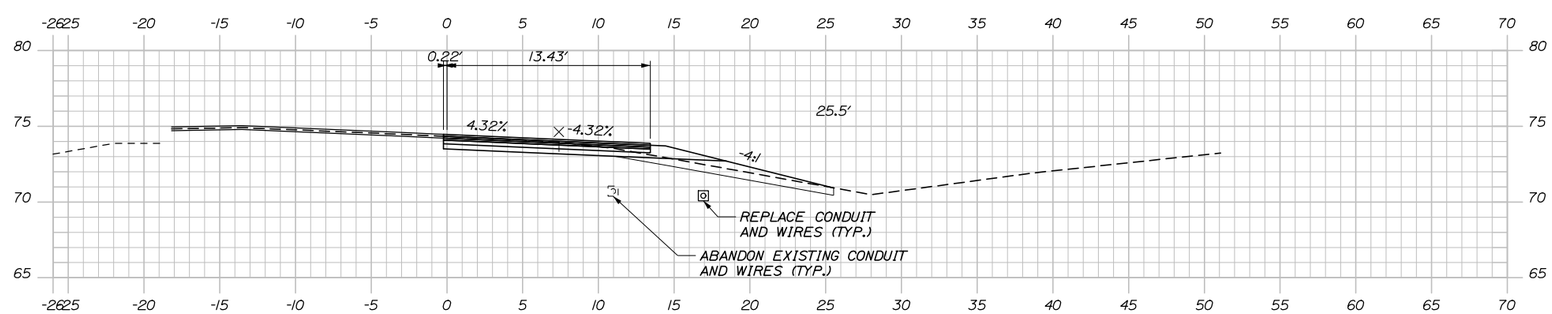

404+50.00

Date:1/23/2015

Filename: xsect.dgn

Scale:

No.	Revision	By	Date

Designed by:

HNTB

CONSULTANT PROJECT MANAGER: Craig R. Morin, P.E.

	By	Date		By	Date
Designed	CAH	01\15	Checked	CRM	01\15
Drawn	MPC	01\15	In Charge of	RAL	01\15

HNTB CORPORATION
340 County Road, Suite 6-C
Westbrook, ME 04092
TEL (207) 774-5155
FAX (207) 228-0909

MAINE TURNPIKE

THE GOLD STAR MEMORIAL HIGHWAY

MTA PROJECT MANAGER: Ralph C. Norwood, IV, P.E., P.T.O.E.

BRIDGE REPAIRS
PAVEMENT REHABILITATION

EXIT 46 NB ON RAMP
CROSS SECTIONS

SHEET NUMBER: XS-13

CONTRACT:2015.03

Date:1/23/2015

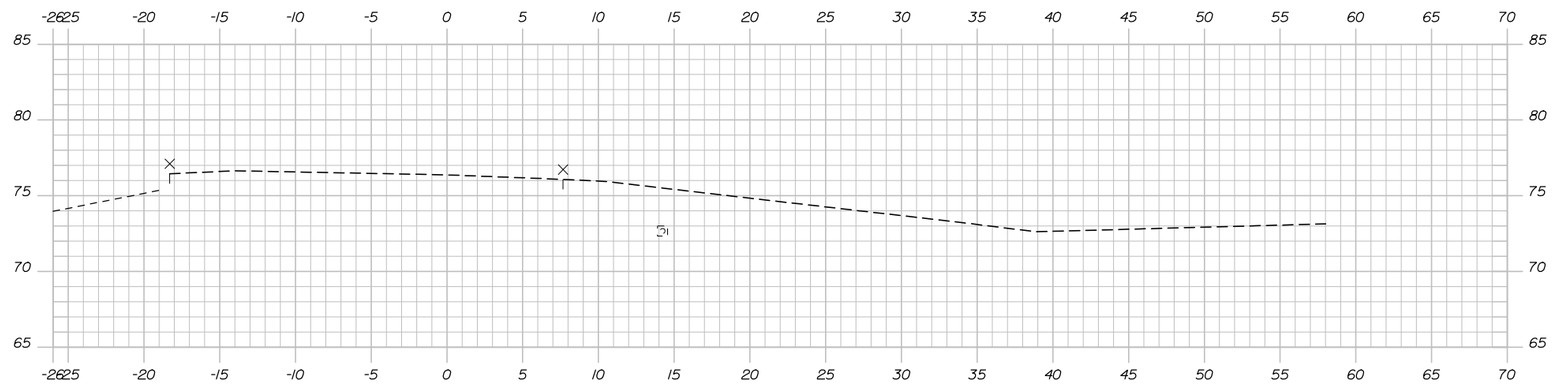

406+50.00

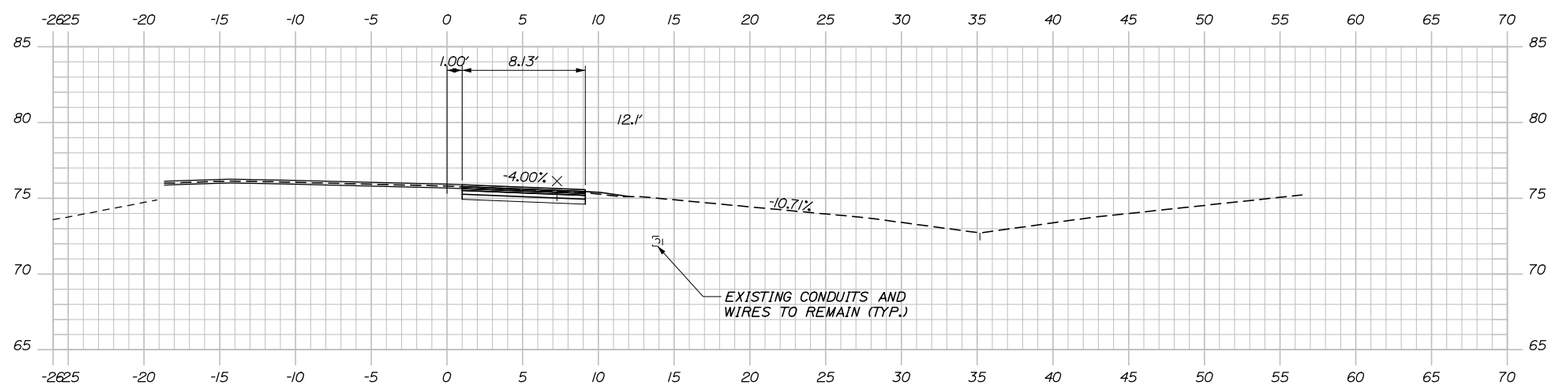

406+00.00

Scale:

No.	Revision	By	Date

Designed by:

HNTB

CONSULTANT PROJECT MANAGER: Craig R. Morin, P.E.

	By	Date		By	Date
Designed	CAH	01\15	Checked	CRM	01\15
Drawn	MPC	01\15	In Charge of	RAL	01\15

HNTB CORPORATION
340 County Road, Suite 6-C
Westbrook, ME 04092
TEL (207) 774-5155
FAX (207) 228-0909

MAINE TURNPIKE

THE GOLD STAR MEMORIAL HIGHWAY

MTA PROJECT MANAGER: Ralph C. Norwood, IV, P.E., P.T.O.E.

BRIDGE REPAIRS
PAVEMENT REHABILITATION

EXIT 46 NB ON RAMP
CROSS SECTIONS

SHEET NUMBER: XS-14

CONTRACT:2015.03

Filename: xsect.dgn

Date:1/23/2015

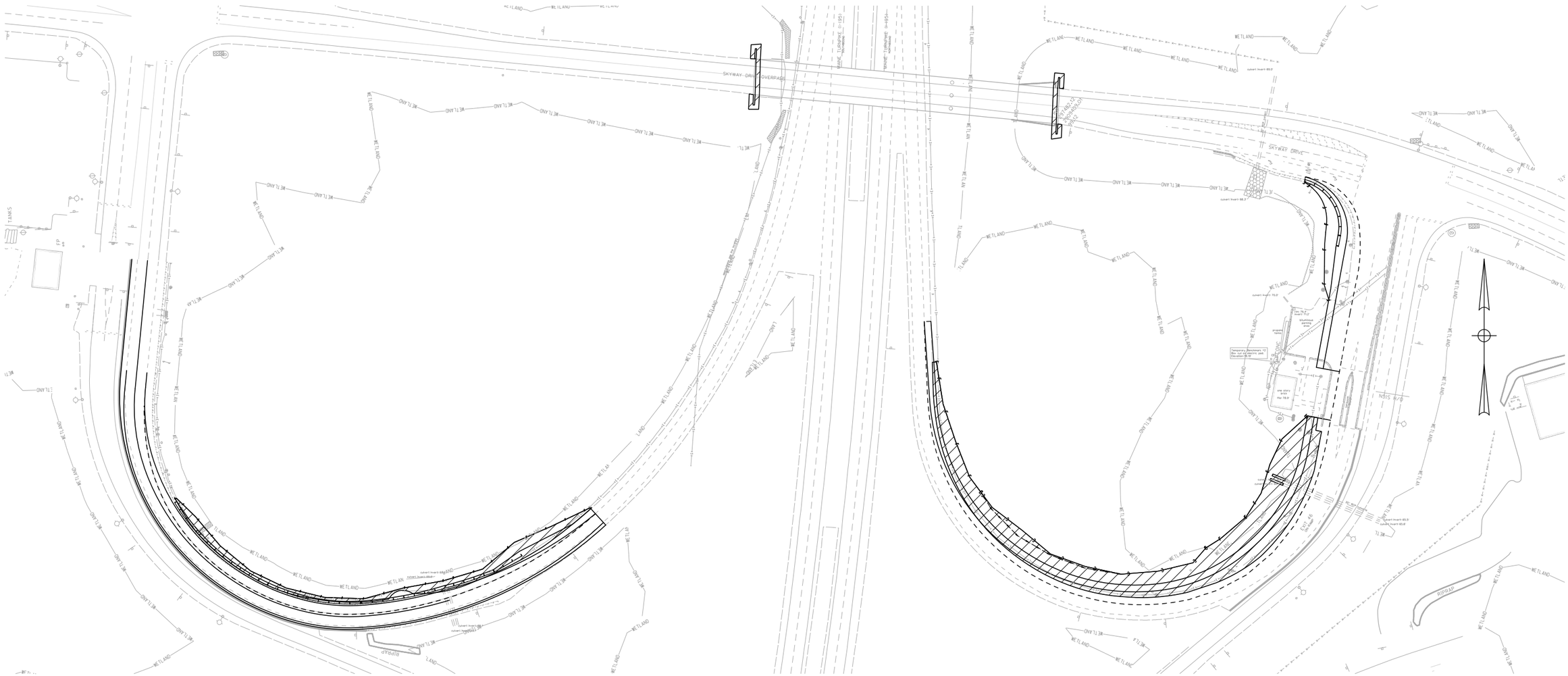

LEGEND

THIS CONTRACT LIMIT OF DISTURBANCE (0.62 ACRES)

CONTRACTORS LIMIT OF DISTURBANCE AREA FOR ACCESS AND STORAGE, THIS CONTRACT (0.35 ACRES). SEE NOTE 3.

NOTES:

1. EROSION AND SEDIMENTATION CONTROL DEVICES REQUIRED FOR THE CONTRACTOR'S ACCESS LOCATIONS AND STORAGE AREAS WILL NOT BE MEASURED FOR PAYMENT.

2. SEE SPECIFICATIONS FOR CONTRACTOR'S SUBMITTAL REQUIREMENTS IF ADDING ADDITIONAL LIMITS OF DISTURBANCE TO THE PROJECT ESTIMATED QUANTITIES.

3. USE OF EXISTING PARK AND RIDE LOT TO BE APPROVED BY RESIDENT.

Scale: 60 0 60 120

No.	Revision	By	Date

Designed by: HNTB

CONSULTANT PROJECT MANAGER: Craig R. Morin, P.E.

	By	Date		By	Date
Designed	CAH	01/15	Checked	CRM	01/15
Drawn	MPC	01/15	In Charge of	RAL	01/15

HNTB CORPORATION
340 County Road, Suite 6-C
Westbrook, ME 04092
TEL (207) 774-5155
FAX (207) 228-0909

MAINE TURNPIKE

THE GOLD STAR MEMORIAL HIGHWAY

MTA PROJECT MANAGER: Ralph C. Norwood, IV, P.E., P.T.O.E.

BRIDGE REPAIRS PAVEMENT REHABILITATION

LIMIT OF DISTURBANCE PLAN

SHEET NUMBER: LD-01

CONTRACT:2015.03

Filename: 053_LOD.dgn

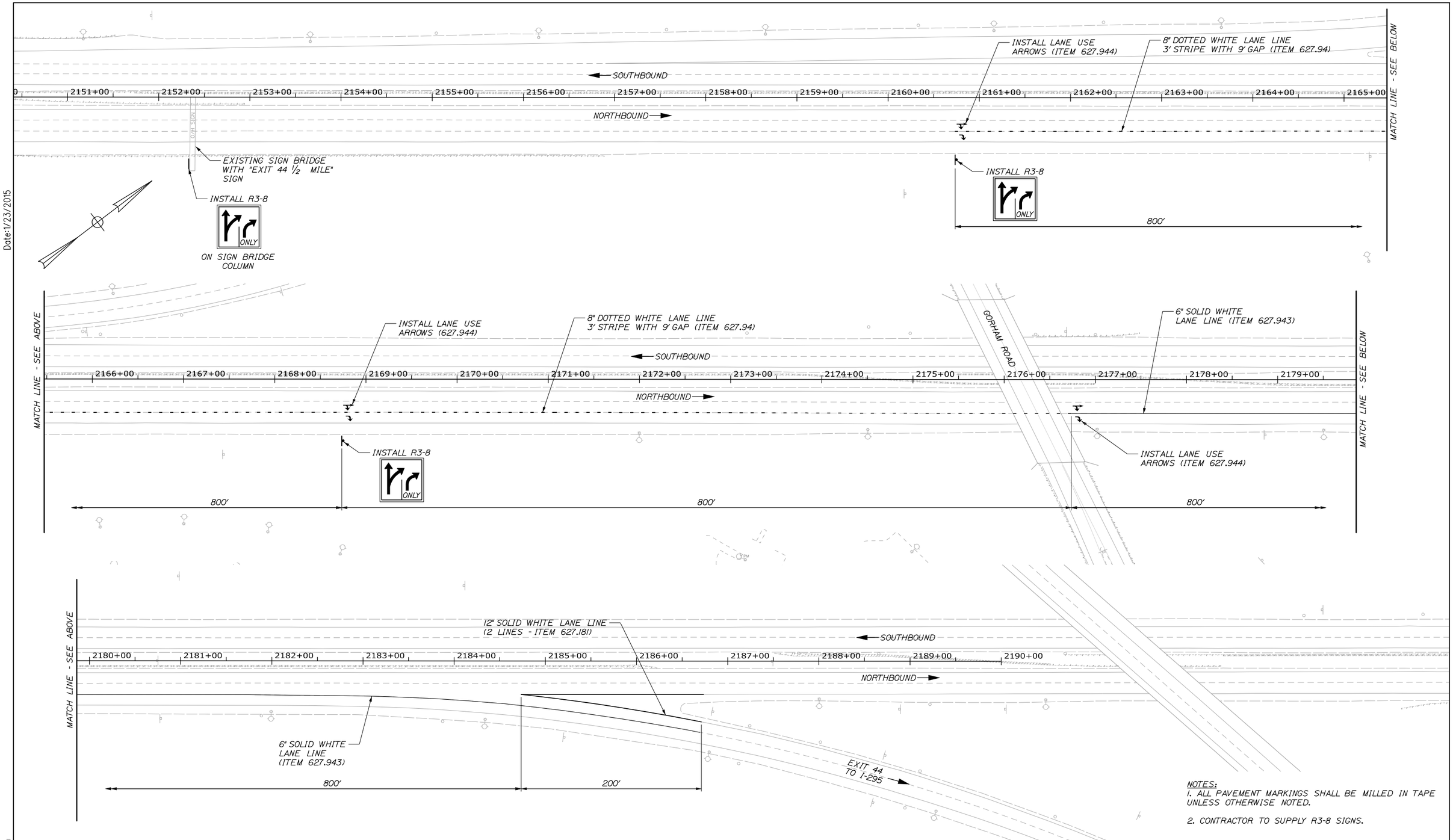

NOTES:
1. ALL PAVEMENT MARKINGS SHALL BE MILLED IN TAPE UNLESS OTHERWISE NOTED.

2. CONTRACTOR TO SUPPLY R3-8 SIGNS.

Date:1/23/2015

Filename: 054_Striping-44.dgn

Scale:

No.	Revision	By	Date

Designed by:

HNTB

CONSULTANT PROJECT MANAGER: Craig R. Morin, P.E.

	By	Date		By	Date
Designed	CAH	01/15	Checked	CRM	01/15
Drawn	MPC	01/15	In Charge of	RAL	01/15

HNTB CORPORATION
340 County Road, Suite 6-C
Westbrook, ME 04092
TEL (207) 774-5155
FAX (207) 228-0909

MAINE TURNPIKE

THE GOLD STAR MEMORIAL HIGHWAY

MTA PROJECT MANAGER: Ralph C. Norwood, IV, P.E., P.T.O.E.

BRIDGE REPAIRS
PAVEMENT REHABILITATION

EXIT 44 STRIPING PLAN

SHEET NUMBER: SP-01

CONTRACT:2015.03

SB OFF RAMP STRIPING LAYOUT TABLE				
		Offsets		
	Station	Yellow	White Ctr.	White
SB Toll Plaza Baseline	603+00.00	-3.25	-15.07	-27.71
SB Toll Plaza Baseline	603+25.00	-3.27	-15.07	-27.56
SB Toll Plaza Baseline	603+50.00	-3.19	-15.07	-27.45
SB Toll Plaza Baseline	603+75.00	-3.08	-15.07	-27.35
SB Toll Plaza Baseline	604+00.00	-2.98	-15.07	-27.19
SB Toll Plaza Baseline	604+25.00	-3.07	-15.07	-27.07
SB Toll Plaza Baseline	604+50.00	-2.30	-14.41	-26.57
SB Toll Plaza Baseline	604+75.00	-1.49	-13.81	-26.23
SB Toll Plaza Baseline	605+00.00	-0.99	-13.53	-26.20
SB Toll Plaza Baseline	605+25.00	-0.79	-13.55	-26.47
SB Toll Plaza Baseline	605+50.00	-0.91	-13.88	-26.88
SB Toll Plaza Baseline	605+75.00	-1.28	-14.28	-27.28
SB Toll Plaza Baseline	606+00.00	-1.65	-14.66	-27.66
SB Toll Plaza Baseline	606+25.00	-2.01	-15.01	-28.01
SB Toll Plaza Baseline	606+50.00	-2.33	-15.33	-28.33
SB Toll Plaza Baseline	606+75.00	-2.54	-15.54	-28.54
SB Toll Plaza Baseline	607+00.00	-2.62	-15.62	-28.62
SB Toll Plaza Baseline	607+25.00	-2.58	-15.58	-28.58
SB Toll Plaza Baseline	607+50.00	-2.40	-15.40	-28.40
SB Toll Plaza Baseline	607+63.41	-2.25	-15.25	-28.26
SB Off Ramp Baseline	112+00.00	-14.00		0.00
SB Off Ramp Baseline	112+25.00	-14.48		1.24
SB Off Ramp Baseline	112+50.00	-14.89		2.49
SB Off Ramp Baseline	112+75.00	-15.24		3.75
SB Off Ramp Baseline	113+00.00	-15.53		5.01
SB Off Ramp Baseline	113+25.00	-15.74		6.27
SB Off Ramp Baseline	113+50.00	-15.90		7.53
SB Off Ramp Baseline	113+75.00	-15.98		8.77
SB Off Ramp Baseline	114+00.00	-16.00	-3.00	10.00
SB Off Ramp Baseline	114+25.00	-16.00	-3.00	10.00
SB Off Ramp Baseline	114+50.00	-16.00	-3.00	10.00
SB Off Ramp Baseline	114+75.00	-16.00	-3.00	10.00
SB Off Ramp Baseline	115+00.00	-16.00	-3.00	10.00
SB Off Ramp Baseline	115+25.00	-16.15	-3.15	9.85
SB Off Ramp Baseline	115+50.00	-16.00	-3.00	10.00
SB Off Ramp Baseline	115+75.00	-15.54	-2.54	10.47

NB ON RAMP STRIPING LAYOUT TABLE				
		Offsets		
	Station	Yellow	Existing White	White
NB Toll Plaza Baseline	503+25.00	11.51	41.30	60.71
NB Toll Plaza Baseline	503+50.00	10.70	39.70	58.76
NB Toll Plaza Baseline	503+75.00	9.39	37.29	55.64
NB Toll Plaza Baseline	504+00.00	7.06	34.03	52.63
NB Toll Plaza Baseline	504+25.00	6.76	31.66	49.78
NB Toll Plaza Baseline	504+50.00	5.84	28.00	47.12
NB Toll Plaza Baseline	504+75.00	5.44	25.70	44.69
NB Toll Plaza Baseline	504+95.88	5.37	22.56	42.85
NB On Ramp Baseline	400+25.00	-12.49	3.79	23.41
NB On Ramp Baseline	400+50.00	-12.72	1.22	20.93
NB On Ramp Baseline	400+75.00	-12.59	0.22	18.80
NB On Ramp Baseline	401+00.00	-13.14	-0.20	17.06
NB On Ramp Baseline	401+25.00	-13.28	-1.00	15.72
NB On Ramp Baseline	401+50.00	-13.36	-0.79	14.83
NB On Ramp Baseline	401+75.00	-14.06	-0.69	14.21
NB On Ramp Baseline	402+00.00	-13.60	-0.64	13.53
NB On Ramp Baseline	402+25.00	-13.48	-0.48	12.81
NB On Ramp Baseline	402+50.00	-13.97	-0.42	12.05
NB On Ramp Baseline	402+75.00	-13.65	-0.46	11.25
NB On Ramp Baseline	403+00.00	-13.58	-0.35	10.43
NB On Ramp Baseline	403+25.00	-13.82	-0.20	9.59
NB On Ramp Baseline	403+50.00	-13.54	-0.07	8.74
NB On Ramp Baseline	403+75.00	-13.44	-0.04	7.89
NB On Ramp Baseline	404+00.00	-13.97	-0.14	7.05
NB On Ramp Baseline	404+25.00	-13.69	-0.12	6.22
NB On Ramp Baseline	404+50.00	-13.53	0.03	5.42
NB On Ramp Baseline	404+75.00	-13.89	0.11	4.65
NB On Ramp Baseline	405+00.00	-13.26	0.24	3.92
NB On Ramp Baseline	405+25.00	-13.14	0.53	3.24
NB On Ramp Baseline	405+50.00	-13.69	0.60	2.62
NB On Ramp Baseline	405+75.00	-14.17	0.29	1.90
NB On Ramp Baseline	406+00.00	-14.34	0.05	1.12
NB On Ramp Baseline	406+25.00	-14.26	-0.18	0.35
NB On Ramp Baseline	406+50.00	-14.04	-0.20	
NB On Ramp Baseline	406+75.00	-13.84	-0.08	

NOTES:

1. THE CONTRACTOR SHALL FURNISH ALL TEMPORARY STRIPING AT EXIT 46. TEMPORARY STRIPES SHALL NOT BE PAINTED ON THE FINAL PAVEMENT SURFACE.

2. THE CONTRACTOR SHALL INSTALL THE PERMANENT RAMP STRIPING. THE PERMANENT RAMP STRIPING SHALL BE INSTALLED PER THE TOLERANCES OUTLINED IN THE 627 SPECIFICATIONS.

3. WITH THE EXCEPTION OF THE (TO BE) WIDENED PORTIONS OF THE NORTHBOUND ON AND SOUTHBOUND OFF RAMPS THE CONTRACTOR SHALL SURVEY AND TIE THE EXISTING PAVEMENT MARKING LINES ON THE RAMPS AND IN THE PLAZA AREAS AT EXIT 46 PRIOR TO REMOVING, MILLING, OR PAVING OVER THE EXISTING PAVEMENT MARKING LINES AT THE EXIT. THE CONTRACTOR SHALL USE THE SURVEYED INFORMATION TO RE-ESTABLISH THE PAVEMENT MARKING LINES AFTER THE SURFACE PAVING IS COMPLETED. THIS WORK SHALL BE INCIDENTAL TO THE 627 PAY ITEM(S).

4. THE CONTRACTOR SHALL STRIPE THE APPROACH AND DEPARTURE AREAS IN FRONT OF THE TOLL ISLANDS AS SHOWN ON THE STRIPING DETAIL ON THIS PAGE. THE WHITE STRIPE LINES (6 INCH) SHALL BE PAID AS 6 INCH WIDE LINES.

5. THE CONTRACTOR SHALL INSTALL THE WORD AND ARROW PAVEMENT MARKINGS AT THE SIGNALED RAMP INTERSECTIONS WITH SKYWAY DRIVE AS SHOWN ON THE STRIPING DETAIL ON THIS PAGE. THE WORD AND ARROW PAVEMENT MARKINGS SHALL BE PAID BY THE SQUARE FOOT BASED ON THE AREAS NOTED ON PAGE 627(02) OF THE MAINEDOT STANDARD DETAILS.

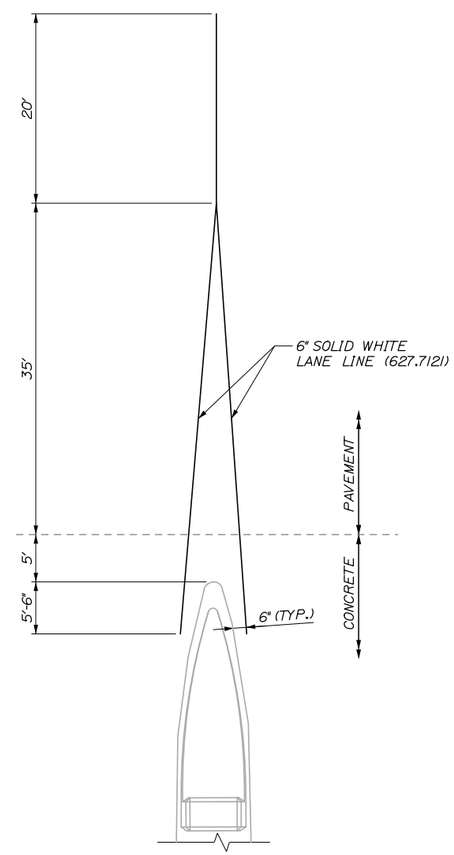

TOLL PLAZA ISLAND
APPROACH AND DEPARTURE STRIPING

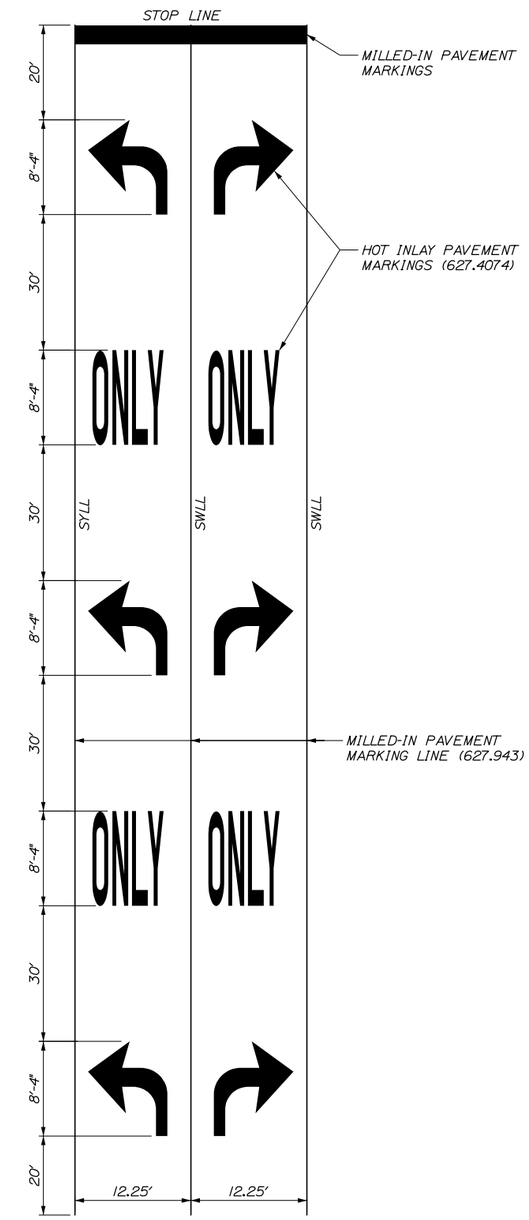

Date:1/23/2015

Filename: 055_Striping-46.dgn

Scale:

No.	Revision	By	Date

Designed by:

HNTB

CONSULTANT PROJECT MANAGER: Craig R. Morin, P.E.

	By	Date		By	Date
Designed	CAH	01/15	Checked	CRM	01/15
Drawn	MPC	01/15	In Charge of	RAL	01/15

HNTB CORPORATION
340 County Road, Suite 6-C
Westbrook, ME 04092
TEL (207) 774-5155
FAX (207) 228-0909

MAINE TURNPIKE

THE GOLD STAR MEMORIAL HIGHWAY

MTA PROJECT MANAGER: Ralph C. Norwood, IV, P.E., P.T.O.E.

BRIDGE REPAIRS
PAVEMENT REHABILITATION

EXIT 46 STRIPING PLAN

SHEET NUMBER: SP-02

CONTRACT:2015.03

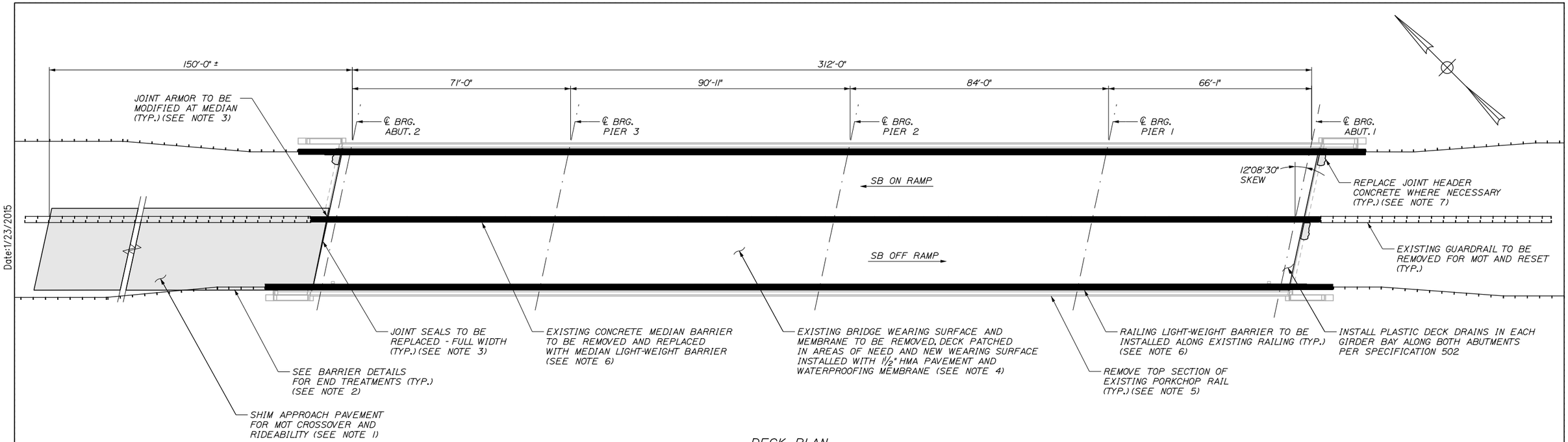

DECK PLAN
1/16" = 1'-0"

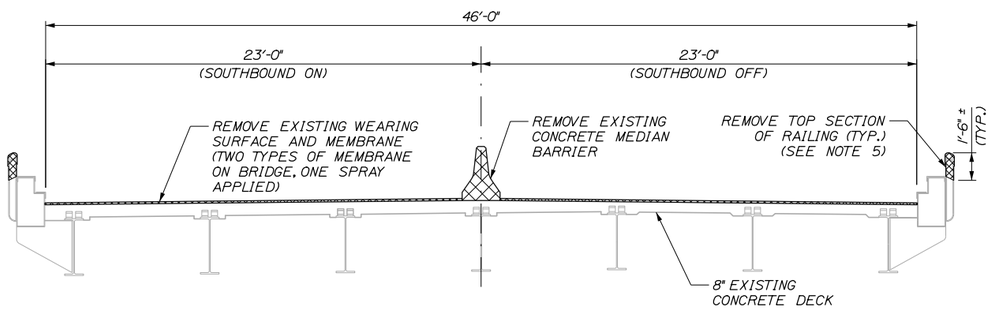

TYPICAL SECTION - EXISTING
1/4" = 1'-0"

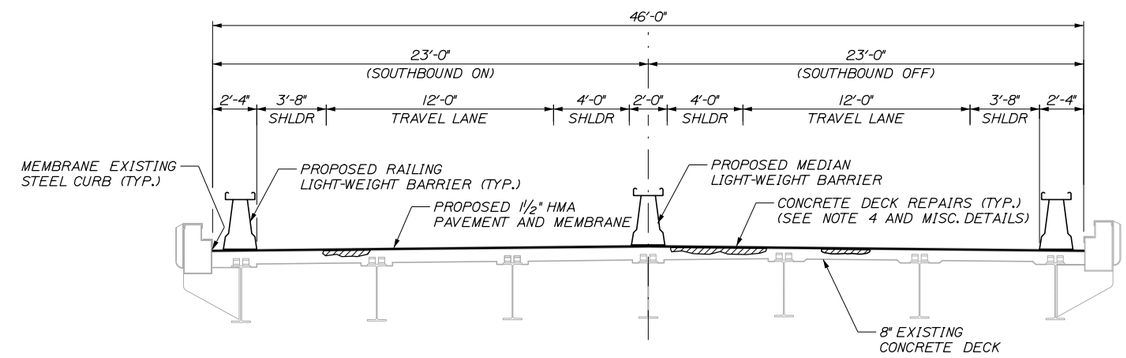

TYPICAL SECTION - PROPOSED
1/4" = 1'-0"

NOTES:

1. THERE IS A HEIGHT DIFFERENTIAL OF APPROXIMATELY 6" BETWEEN THE WEST APPROACH PAVEMENT ON RAMP AND OFF RAMP. THE SOUTHWEST APPROACH PAVEMENT SHALL BE SHIMMED TO PROVIDE A SMOOTH CROSSOVER DURING MAINTENANCE OF TRAFFIC (MOT) OPERATIONS AND TO IMPROVE CURRENT RIDEABILITY. SEE MAINTENANCE OF TRAFFIC DETAILS FOR MORE INFORMATION ON LAYOUT AND SHIM LIMITS.

2. PROPOSED LIGHT-WEIGHT BARRIER TRANSITIONS WILL REQUIRE DIRECT GUARDRAIL TRANSITIONS. SEE BARRIER DETAILS FOR MORE INFORMATION. THE TRANSITIONS SHALL BE MEASURED FOR PAYMENT UNDER PAY ITEM, LIGHT-WEIGHT BARRIER, 526.35.

3. EXISTING MEDIAN BARRIER SHALL BE REMOVED TO THE LIMITS SHOWN IN THE BARRIER DETAILS. REMOVAL SHALL INCLUDE REMOVING PORTIONS OF THE EXISTING JOINT AT THE MEDIAN BARRIER. JOINT REMOVAL SHALL BE INCIDENTAL TO PAY ITEM 202.299, REMOVING CONCRETE BARRIER. JOINT MODIFICATIONS AND SEAL REPLACEMENT SHALL BE MEASURED FOR PAYMENT UNDER PAY ITEM 520.21, EXPANSION DEVICE-GLAND SEAL. FOR MORE INFORMATION ON DEMOLITION AND MODIFICATION SEE JOINT DETAILS.

4. AFTER THE EXISTING WEARING SURFACE AND MEMBRANE ARE REMOVED THE RESIDENT SHALL IDENTIFY AREAS OF DECK REPAIRS BASED ON REQUIREMENTS IN SPECIAL PROVISION 503 AND 518. THE ACTUAL REPAIR AREAS FOR THIS ITEM ARE UNDEFINED. FOR QUANTITIES IT WAS ASSUMED THAT 7.5% OF THE DECK AREA WILL REQUIRE PARTIAL DEPTH CONCRETE DECK REPAIRS AND 1% OF THE DECK AREA WILL REQUIRE FULL DEPTH CONCRETE DECK REPAIRS. THIS WORK SHALL BE MEASURED FOR PAYMENT UNDER PAY ITEMS 518.80, PARTIAL DEPTH CONCRETE DECK REPAIRS AND 518.81, FULL DEPTH CONCRETE DECK REPAIRS.

5. THE EXISTING PORKCHOP RAILINGS AND POSTS SHALL BE REMOVED TO THE LIMITS SHOWN IN THE TYPICAL SECTION. METHOD OF REMOVAL SHALL BE IN ACCORDANCE WITH SPECIAL PROVISION 107 AND 202. THIS WORK SHALL BE MEASURED FOR PAYMENT UNDER PAY ITEM 202.114, REMOVING EXISTING RAILINGS.

6. THE PROPOSED MEDIAN LIGHT-WEIGHT BARRIER AND RAILING LIGHT-WEIGHT BARRIER SHALL BE "BARRIERGUARD 800 MDS". SEE BARRIER DETAILS AND SPECIAL PROVISION 507 FOR MORE INFORMATION ON LAYOUT, PRODUCT AND MANUFACTURER.

7. BRIDGE JOINT HEADER REPLACEMENT, WHICH INCLUDES PATCHING APPROACH PAVEMENT, SHALL BE PERFORMED ON AN AS NEEDED BASIS ALONG ALL JOINTS. THE ACTUAL REPAIR AREAS FOR THIS ITEM ARE UNDEFINED AND WILL BE DETERMINED IN THE FIELD BY THE RESIDENT. THIS WORK SHALL BE MEASURED FOR PAYMENT UNDER PAY ITEM 518.86, BRIDGE JOINT HEADER REPLACEMENT.

8. REMOVAL/INSTALLATION OF WEARING SURFACE AND PLACEMENT OF LIGHT-WEIGHT BARRIER SHALL BE ACCOMPLISHED USING THE CONSTRUCTION SEQUENCE PRESENTED IN THE EXIT 45 MAINTENANCE OF TRAFFIC DETAILS.

9. BRIDGE JOINT SEALS SHALL BE INSTALLED PRIOR TO INSTALLATION OF PERMANENT LIGHT-WEIGHT BARRIER.

Date:1/23/2015

Filename: 056_DeckPlan-45.dgn

Scale:

No.	Revision	By	Date

Designed by:

HNTB

CONSULTANT PROJECT MANAGER: Craig R. Morin, P.E.

	By	Date		By	Date
Designed	KEB	01/15	Checked	CRM	01/15
Drawn	MPC	01/15	In Charge of	RAL	01/15

HNTB CORPORATION
340 County Road, Suite 6-C
Westbrook, ME 04092
TEL (207) 774-5155
FAX (207) 228-0909

MAINE TURNPIKE

THE GOLD STAR MEMORIAL HIGHWAY

MTA PROJECT MANAGER: Ralph C. Norwood, IV, P.E., P.T.O.E.

BRIDGE REPAIRS
PAVEMENT REHABILITATION
EXIT 45 BRIDGE
DECK PLAN AND TYPICAL SECTION

SHEET NUMBER: S-01

CONTRACT:2015.03

REMOVAL PROCEDURES:

1. PRIOR TO THE START OF THE CONCRETE REMOVALS, THE CONTRACTOR SHALL REMOVE TECTYL COATING WHERE PRESENT.

2. THE RESIDENT SHALL THEN SOUND THE ABUTMENT CONCRETE AND DELINEATE AREAS OF REPAIR SIMILAR TO WHAT IS SHOWN IN THE PLANS. IT SHOULD BE NOTED THAT DURING THE DESIGN PHASE THE SUBSTRUCTURE WAS NOT SOUNDED. AREAS DELINEATED REPRESENT OBVIOUS LOCATIONS OF REPAIR (I.E., EXPOSED REINFORCING OR SPALLS). THIS REPAIR PROJECT DOES NOT INTEND TO REPAIR SMALL AREAS OF DETERIORATION. RESIDENT TO FOCUS ON AREAS EXPOSED TO THE ELEMENTS, UNLESS EXTENSIVE DETERIORATION OR DELAMINATIONS ARE FOUND IN OTHER LOCATIONS.

3 AFTER THE RESIDENT HAS DELINEATED THE REPAIR AREAS THE CONTRACTOR SHALL AGREE ON THE LIMITS. SHOULD THE REMOVAL AREA LIMITS APPEAR TO CHANGE DURING THE REPAIR PROCESS, THE CONTRACTOR SHALL NOTIFY THE RESIDENT. THE RESIDENT AND CONTRACTOR SHALL AGREE ON THE REVISED PAY LIMITS PRIOR TO THE CONTRACTOR CONTINUING THE REMOVALS. WORK SHALL BE INCIDENTAL TO THE SPECIFIED REPAIR ITEM IN SPECIAL PROVISION 518.

2. PERFORM 1 INCH DEEP SAWCUTS ALONG LIMITS OF REMOVAL.

3. CHIP CONCRETE TO DEPTH SHOWN AND DESCRIBED IN SPECIAL PROVISION 518.

CONCRETE SURFACE PATCH/REPAIR PROCEDURE:

1. PREPARE AND PATCH REPAIR AREAS WITH CLASS AAA MODIFIED CONCRETE. SEE SPECIFICATIONS FOR MATERIAL PREPARATION, PLACEMENT, AND CURING REQUIREMENTS.

2. PERFORM GENERAL FINISHING (SEE BELOW).

GENERAL FINISHING:

1. CONTRACTOR SHALL ENSURE ALL TECTYL COATING HAS BEEN REMOVED PRIOR TO APPLYING PROTECTIVE CONCRETE COATING. WORK SHALL BE INCIDENTAL TO THE SPECIFIED REPAIR ITEM IN SPECIAL PROVISION 518.

2. ALL EXPOSED SURFACES SHALL BE COATED WITH A PROTECTIVE COATING SUITABLE FOR CONCRETE SURFACES AFTER PATCHING IS COMPLETED AND PATCH MATERIALS HAVE CURED.

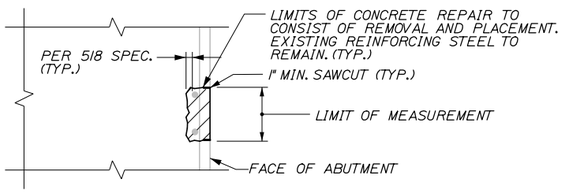

CONCRETE SURFACE PATCH/REPAIR DETAIL
1" = 1'-0"

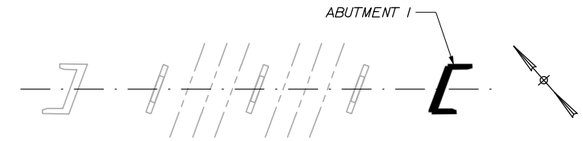

KEY PLAN
NTS

REPAIR QUANTITIES

ABUTMENT SURFACE PATCH REPAIR	44 S.F.*

* INCLUDES 10 S.F. ADDITIONAL REPAIR QUANTITY AS A CONTINGENCY.

LEGEND

LIMIT OF SURFACE PATCH REPAIR

(#) SQUARE FOOT AREA OF REPAIR

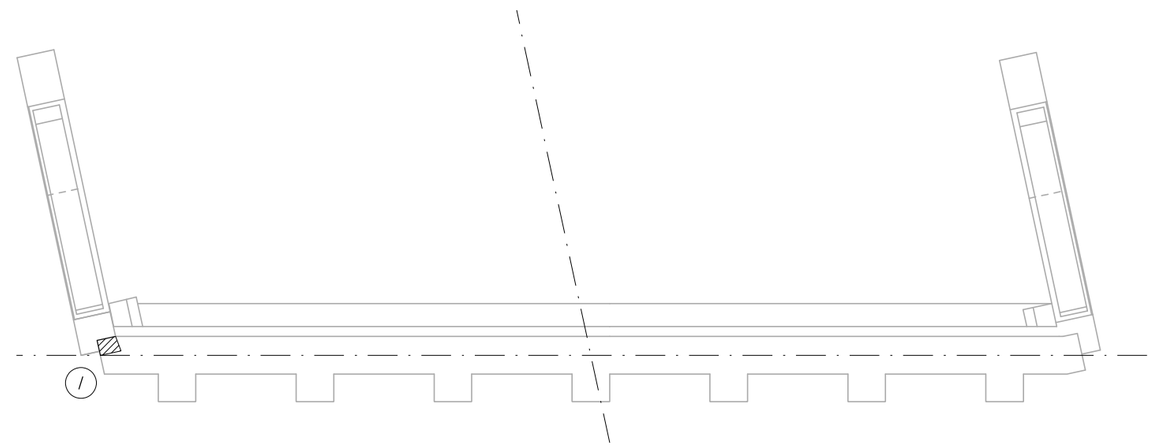

ABUTMENT 1 PLAN
1/4" = 1'-0"

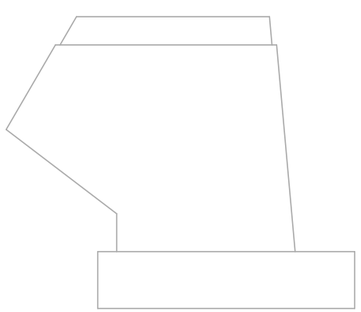

NORTHEAST WINGWALL
1/4" = 1'-0"

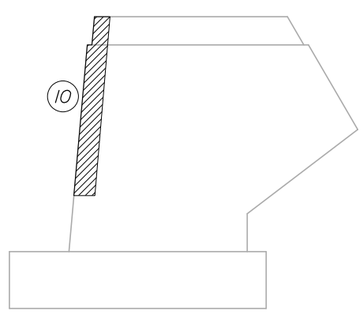

SOUTHEAST WINGWALL
1/4" = 1'-0"

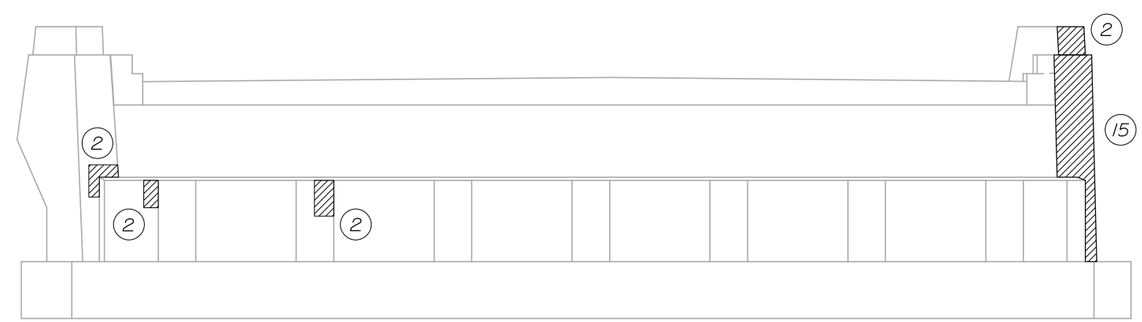

ABUTMENT 1 ELEVATION
1/4" = 1'-0"

Date:1/23/2015

Filename: 057_SubSt-45a.dgn

No.	Revision	By	Date

Scale:

Designed by:

HNTB

CONSULTANT PROJECT MANAGER: Craig R. Morin, P.E.

	By	Date		By	Date
Designed	KEB	01/15	Checked	CRM	01/15
Drawn	MPC	01/15	In Charge of	RAL	01/15

HNTB CORPORATION
340 County Road, Suite 6-C
Westbrook, ME 04092
TEL (207) 774-5155
FAX (207) 228-0909

MAINE TURNPIKE

THE GOLD STAR MEMORIAL HIGHWAY

MTA PROJECT MANAGER: Ralph C. Norwood, IV, P.E., P.T.O.E.

BRIDGE REPAIRS
PAVEMENT REHABILITATION
EXIT 45 BRIDGE
SUBSTRUCTURE REPAIRS 1

SHEET NUMBER: S-02

CONTRACT:2015.03

NOTES:
1. SEE SHEET S-02 FOR NOTES.

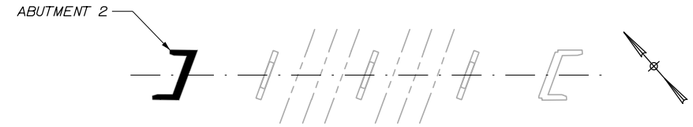

KEY PLAN
NTS

REPAIR QUANTITIES

ABUTMENT SURFACE PATCH REPAIR 31 S.F.*

* INCLUDES 10 S.F. ADDITIONAL REPAIR QUANTITY AS A CONTINGENCY.

LEGEND

LIMIT OF SURFACE PATCH REPAIR

(#) SQUARE FOOT AREA OF REPAIR

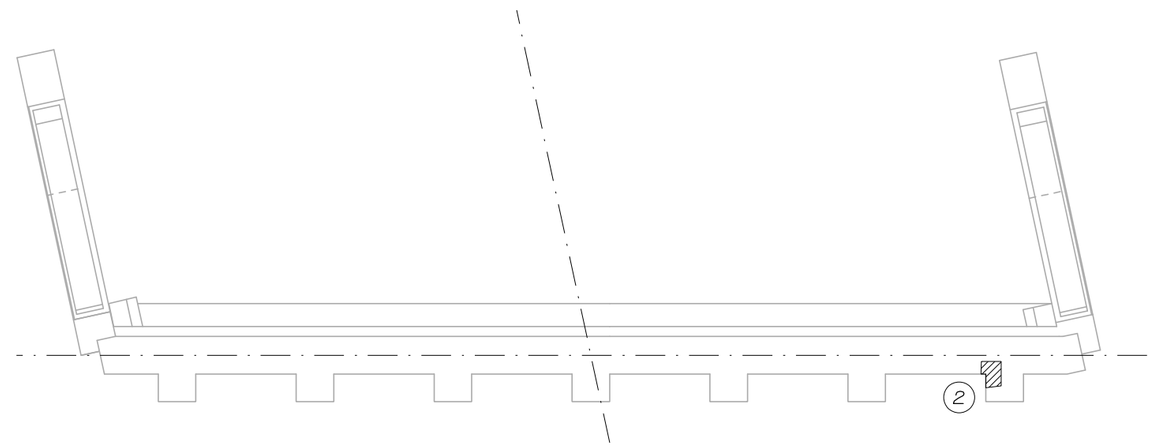

ABUTMENT 2 PLAN
1/4" = 1'-0"

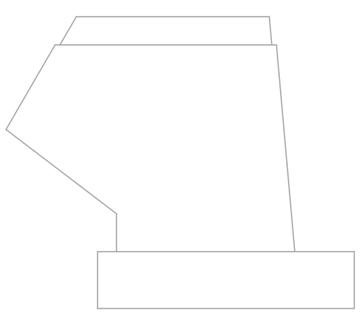

SOUTHWEST WINGWALL
1/4" = 1'-0"

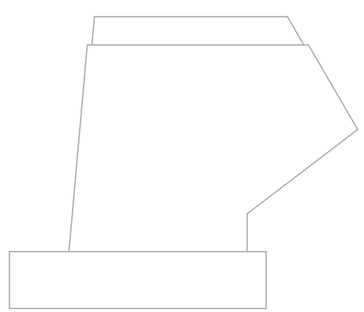

NORTHWEST WINGWALL
1/4" = 1'-0"

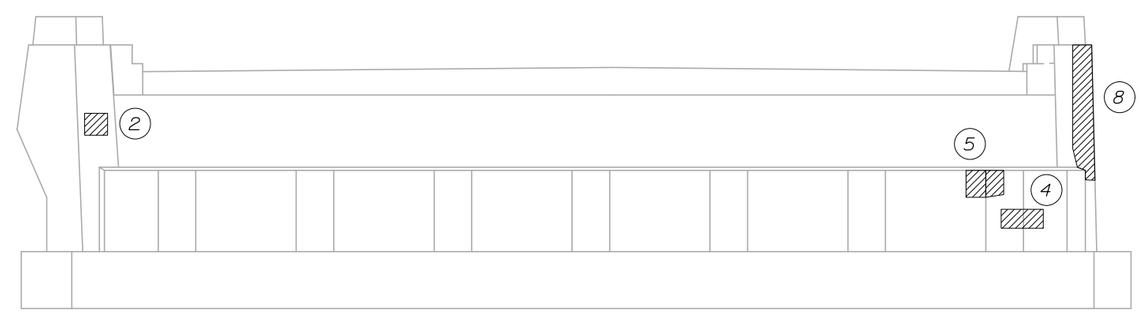

ABUTMENT 2 ELEVATION
1/4" = 1'-0"

Date:1/23/2015

Filename: 058_SubSt-45b.dgn

Scale:

No.	Revision	By	Date

Designed by:

HNTB

CONSULTANT PROJECT MANAGER: Craig R. Morin, P.E.

	By	Date		By	Date
Designed	KEB	01/15	Checked	CRM	01/15
Drawn	MPC	01/15	In Charge of	RAL	01/15

HNTB CORPORATION
340 County Road, Suite 6-C
Westbrook, ME 04092
TEL (207) 774-5155
FAX (207) 228-0909

MAINE TURNPIKE

THE GOLD STAR MEMORIAL HIGHWAY

MTA PROJECT MANAGER: Ralph C. Norwood, IV, P.E., P.T.O.E.

BRIDGE REPAIRS
PAVEMENT REHABILITATION
EXIT 45 BRIDGE
SUBSTRUCTURE REPAIRS II

SHEET NUMBER: S-03

CONTRACT:2015.03

NOTES:

1. FOR SECTIONS A-A, B-B AND C-C SEE SHEET S-05 AND FOR SECTIONS E-E, F-F, G-G AND H-H SEE SHEET S-07.
2. PROPOSED BARRIER ANCHORAGE SHALL BE IN ACCORDANCE WITH MANUFACTURER'S CRASH TESTED CONFIGURATION TO ACHIEVE A TL-3 MINIMUM DEFLECTION SYSTEM.
3. BARRIER TRANSITIONS TO GUARDRAIL SHALL BE DETAILED AND PROVIDED BY MANUFACTURER FOR REVIEW.
4. CONTRACTOR SHALL LAYOUT BARRIER SEGMENTS SYMMETRIC ABOUT THE CENTER OF THE BRIDGE. THE FINAL LAYOUT CONFIGURATION SHALL MEET THE MANUFACTURERS REQUIREMENTS FOR JOINT MOVEMENT.
5. CONTRACTOR SHALL ORDER 80' OF EXTRA BARRIER SEGMENTS TO BE STORED AT A TURNPIKE MAINTENANCE YARD. THESE SEGMENTS WILL SERVE AS REPLACEMENT PIECES IF A COLLISION OCCURS IN THE FUTURE.

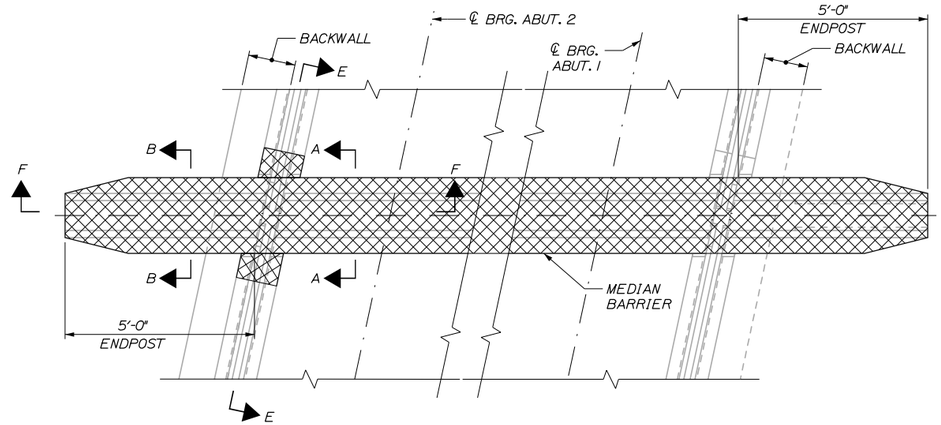

EXISTING MEDIAN BARRIER LAYOUT - PLAN VIEW

1/2" = 1'-0"

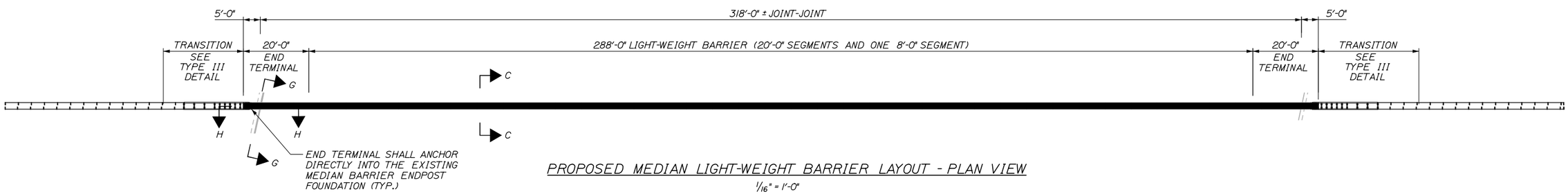

PROPOSED MEDIAN LIGHT-WEIGHT BARRIER LAYOUT - PLAN VIEW

1/16" = 1'-0"

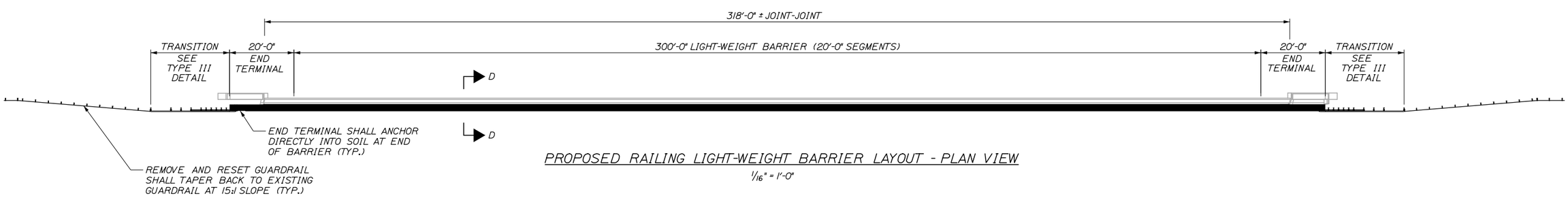

PROPOSED RAILING LIGHT-WEIGHT BARRIER LAYOUT - PLAN VIEW

1/16" = 1'-0"

Date:1/23/2015

Filename: 059_BarrierDets 1.dgn

Scale:

No.	Revision	By	Date

Designed by:

HNTB

CONSULTANT PROJECT MANAGER: Craig R. Morin, P.E.

	By	Date		By	Date
Designed	KEB	01/15	Checked	CRM	01/15
Drawn	MPC	01/15	In Charge of	RAL	01/15

HNTB CORPORATION
340 County Road, Suite 6-C
Westbrook, ME 04092
TEL (207) 774-5155
FAX (207) 228-0909

MAINE TURNPIKE

THE GOLD STAR MEMORIAL HIGHWAY

MTA PROJECT MANAGER: Ralph C. Norwood, IV, P.E., P.T.O.E.

BRIDGE REPAIRS
PAVEMENT REHABILITATION

EXIT 45 BRIDGE
BARRIER DETAILS I

SHEET NUMBER: S-04

CONTRACT:2015.03

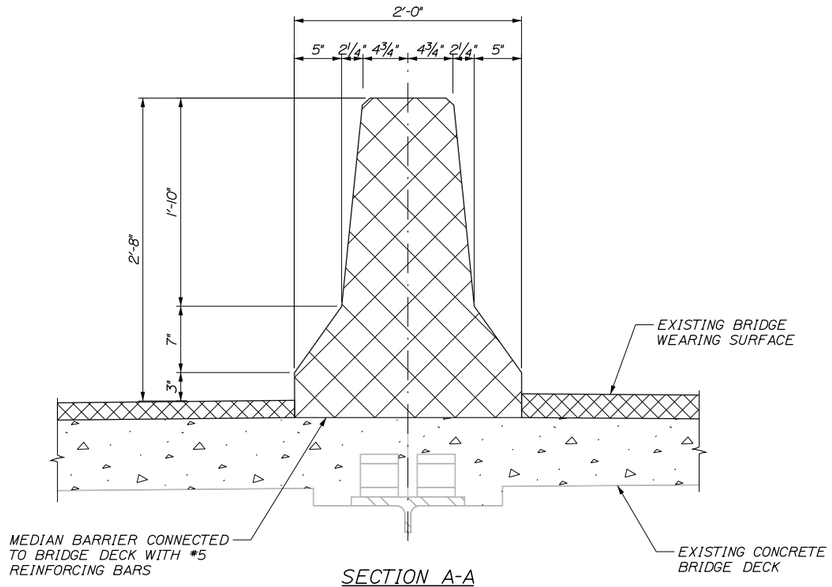

SECTION A-A

(EXISTING BRIDGE MEDIAN BARRIER DEMOLITION LIMITS)

1 1/2" = 1'-0"

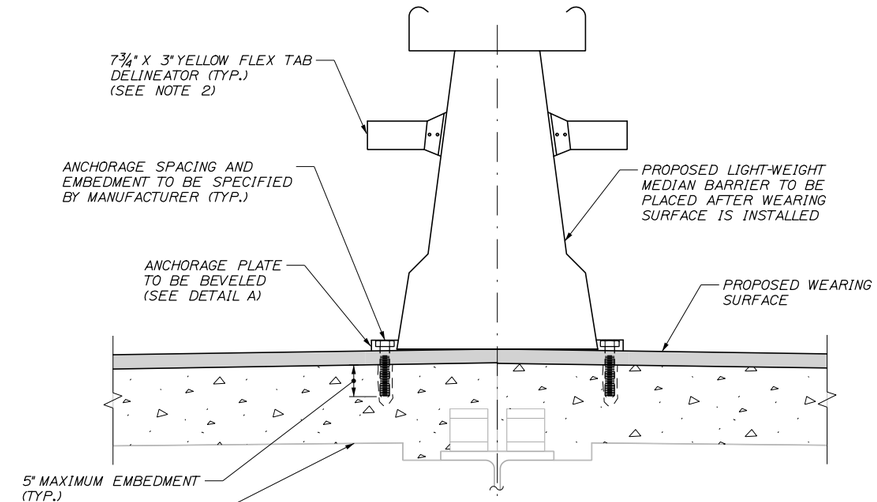

SECTION C-C

(PROPOSED MEDIAN BARRIER)

1 1/2" = 1'-0"

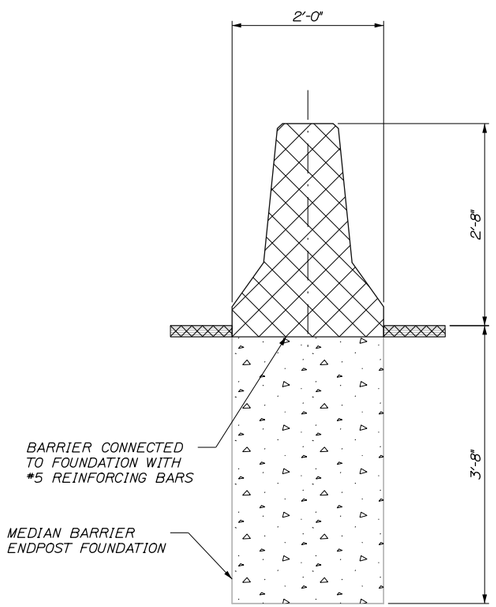

SECTION B-B

(EXISTING MEDIAN BARRIER ENDPOST DEMOLITION LIMITS)

1" = 1'-0"

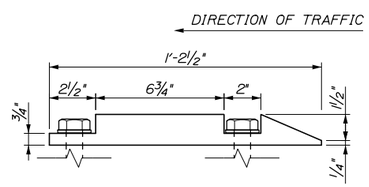

DETAIL A

(ELEVATION/SIDE VIEW OF BARRIER ANCHOR PLATE)

3" = 1'-0"

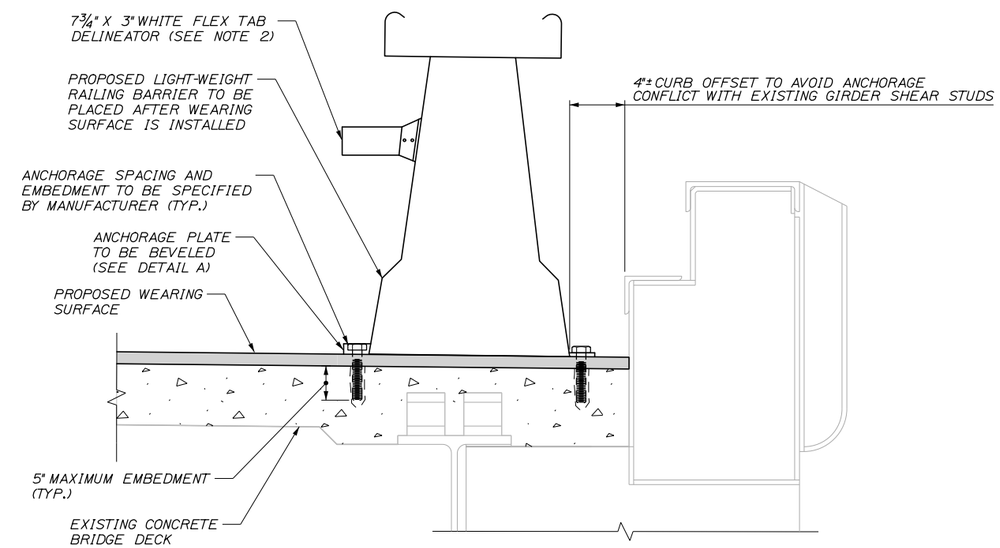

SECTION D-D

(PROPOSED RAILING BARRIER)

1 1/2" = 1'-0"

NOTES:

1. SEE BARRIER SHEET S-04 FOR SECTION CUT LOCATIONS.
2. FLEX TAB DELINEATORS SHALL BE INSTALLED ON EACH BARRIER FACE EXPOSED TO TRAFFIC. THE FLEX TABS SHALL BE FABRICATED AND INSTALLED (ADHESIVE MOUNTED) ACCORDING TO THE BARRIER MANUFACTURERS DETAIL. THE FLEX TABS SHALL BE INCIDENTAL TO THE LIGHT-WEIGHT BARRIER ITEM.
3. ANCHORAGE PLATES SHALL BE BEVELED TO PROVIDE A GUIDE FOR THE PLOW BLADES TO RIDE UP AND CLEAR THE ANCHORAGE BOLTS.

Date:1/23/2015

Filename: 060_BarrierDets II.dgn

Scale:

No.	Revision	By	Date

Designed by:

HNTB

CONSULTANT PROJECT MANAGER: Craig R. Morin, P.E.

	By	Date		By	Date
Designed	KEB	01/15	Checked	CRM	01/15
Drawn	MPC	01/15	In Charge of	RAL	01/15

HNTB CORPORATION
340 County Road, Suite 6-C
Westbrook, ME 04092
TEL (207) 774-5155
FAX (207) 228-0909

MAINE TURNPIKE

THE GOLD STAR MEMORIAL HIGHWAY

MTA PROJECT MANAGER: Ralph C. Norwood, IV, P.E., P.T.O.E.

BRIDGE REPAIRS
PAVEMENT REHABILITATION

EXIT 45 BRIDGE
BARRIER DETAILS II

SHEET NUMBER: S-05

CONTRACT:2015.03

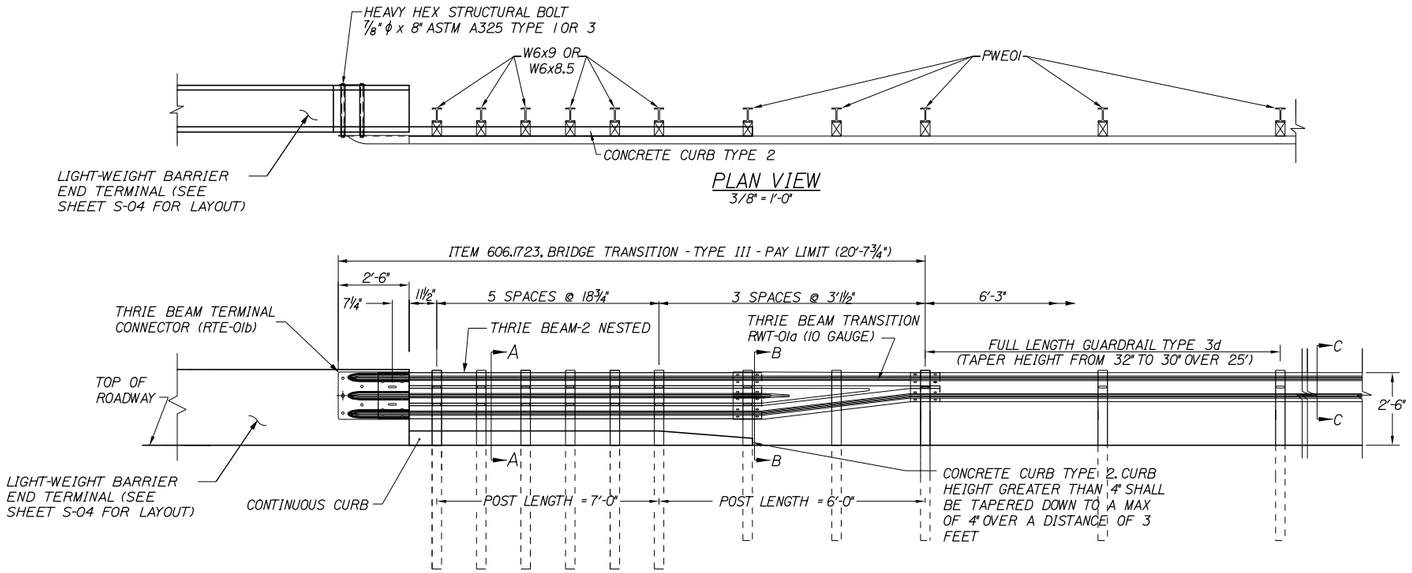

PLAN VIEW
3/8" = 1'-0"

THRIE BEAM BRIDGE ATTACHMENT (TYPE III) AT RAILING BARRIER END TERMINALS
3/8" = 1'-0"

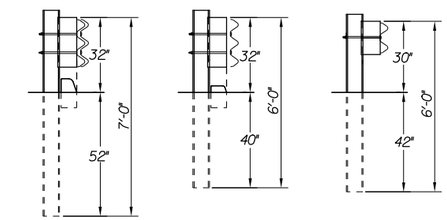

SECTION A-A SECTION B-B SECTION C-C

GENERAL NOTES:

1. ADDITIONAL HOLES MAY BE MADE IN THE THRIE-BEAM PANELS BY DRILLING, PUNCHING, OR OTHER MEANS THAT PRODUCE A NEAT, CLEAN HOLE. BURNING HOLES WILL NOT BE ALLOWED.
2. THRIE BEAM SHALL BE PLACED WITH THE COMPOSITE BLOCKOUT FACE IN FRONT OF OR DIRECTLY ABOVE THE CURB FACE.
3. RAIL ELEMENT SHALL MEET ALL REQUIREMENTS OF AASHTO M-180 EXCEPT AS MODIFIED ON THE PLANS. THE THRIE BEAM TRANSITION TO W-BEAM SHALL BE OF THE SAME MATERIAL, BUT SHALL NOT BE LESS THAN 10 GAUGE.
4. AFTER INSTALLATION IS COMPLETE, UPSET THE THREAD ON THE ANCHOR BOLTS IN THREE PLACES AROUND EACH BOLT, AT THE JUNCTION OF THE NUT AND THE EXPOSED THREAD, WITH A CENTER PUNCH OR SIMILAR TOOL.
5. STANDARD BARRIER HARDWARE HAS BEEN USED TO DEVELOP THESE GUARDRAIL ATTACHMENTS. DESIGNATIONS PROVIDED IN PARENTHESIS RELATE TO STANDARD ELEMENTS DETAILED IN "A GUIDE TO STANDARDIZED BARRIER RAIL HARDWARE." 1979. AASHTO-AGC-ARTBA JOINT COOPERATE COMMITTEE.
6. CONNECTION TO LIGHT-WEIGHT BARRIER SHALL BE IN ACCORDANCE WITH MANUFACTURER CRASH TESTED REQUIREMENTS.
7. FOR THE GUARDRAIL TRANSITION, SECTION C-C AND F-F, GUARDRAIL TYPE 3d SHALL TAPER FROM 30" TO TOP OF POST TO 27" OVER 50' MIN IN ORDER TO MATCH IN TO EXISTING GUARDRAIL.
8. THRIE BEAM BRIDGE ATTACHMENT SHALL HAVE 3" x 7/8" SLOTS AT THE FIRST BOLT CONNECTIONS ON THE BRIDGE DECK. THE THREADS ON THE BOLTS AT THE SLOTS SHALL BE UPSET AT THE JUNCTION OF THE NUT WITH A CENTER PUNCH OR SIMILAR TOOL.

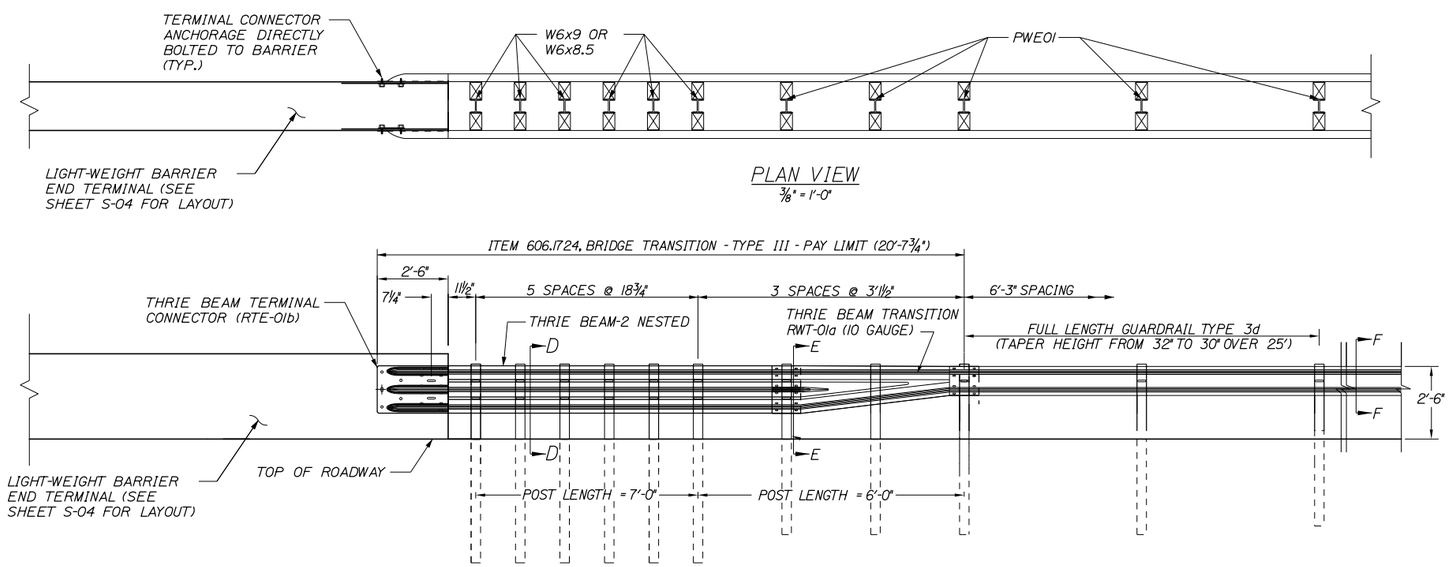

PLAN VIEW
3/8" = 1'-0"

THRIE BEAM BRIDGE ATTACHMENT (TYPE III) AT MEDIAN BARRIER END TERMINALS
3/8" = 1'-0"

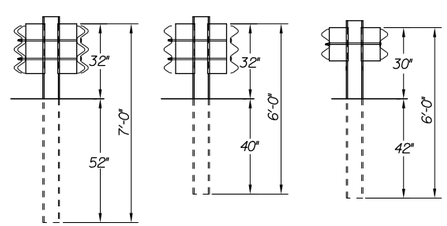

SECTION D-D SECTION E-E SECTION F-F

Date: 1/23/2015

Filename: 061_BarrierDets III.dgn

Scale:			
No.	Revision	By	Date

Designed by: HNTB

CONSULTANT PROJECT MANAGER: Craig R. Morin, P.E.

	By	Date		By	Date
Designed	KEB	01/15	Checked	CRM	01/15
Drawn	MPC	01/15	In Charge of	RAL	01/15

HNTB CORPORATION
340 County Road, Suite 6-C
Westbrook, ME 04092
TEL (207) 774-5155
FAX (207) 228-0909

MAINE TURNPIKE

THE GOLD STAR MEMORIAL HIGHWAY

MTA PROJECT MANAGER: Ralph C. Norwood, IV, P.E., P.T.O.E.

BRIDGE REPAIRS
PAVEMENT REHABILITATION
EXIT 45 BRIDGE
BARRIER DETAILS III

SHEET NUMBER: S-06

CONTRACT: 2015.03

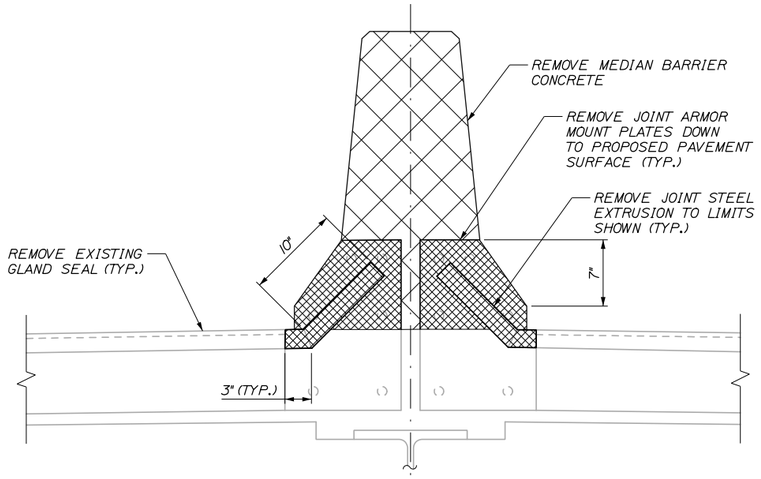

SECTION E-E
(JOINT ARMOR DEMOLITION LIMITS)
1½" = 1'-0"

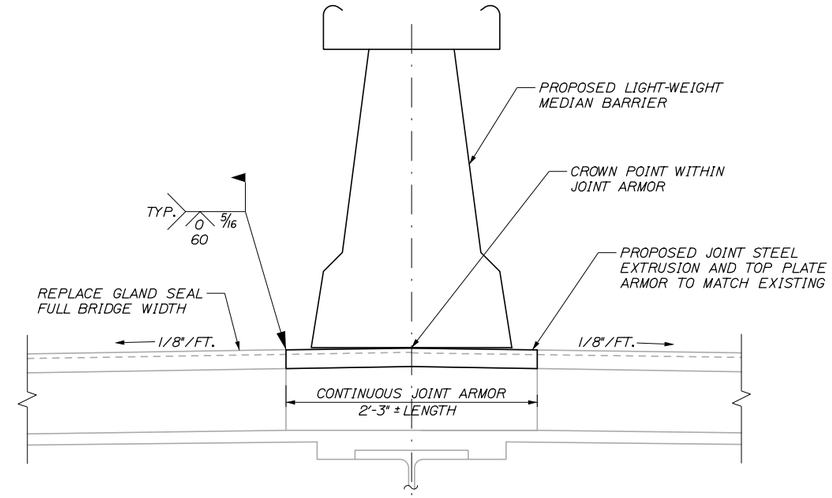

SECTION G-G
(PROPOSED JOINT MODIFICATION)
1½" = 1'-0"

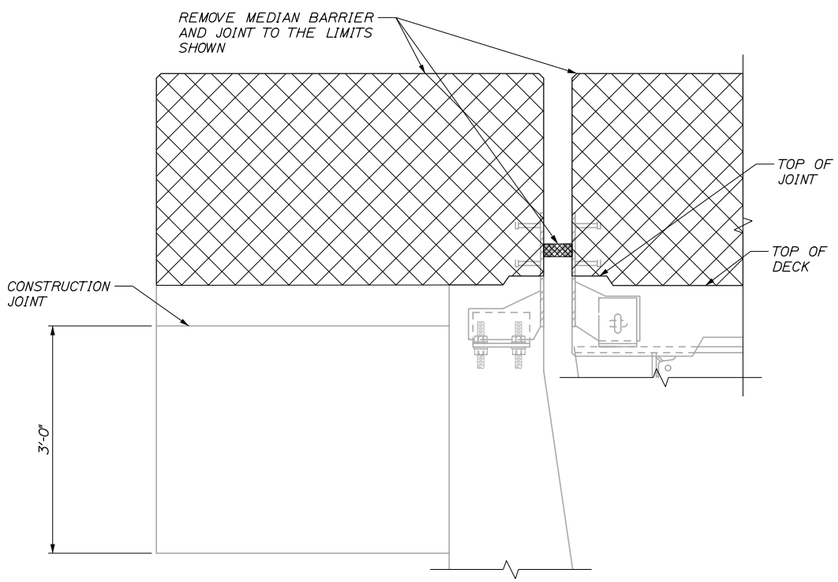

SECTION F-F
(DEMOLITION LIMITS)
1" = 1'-0"

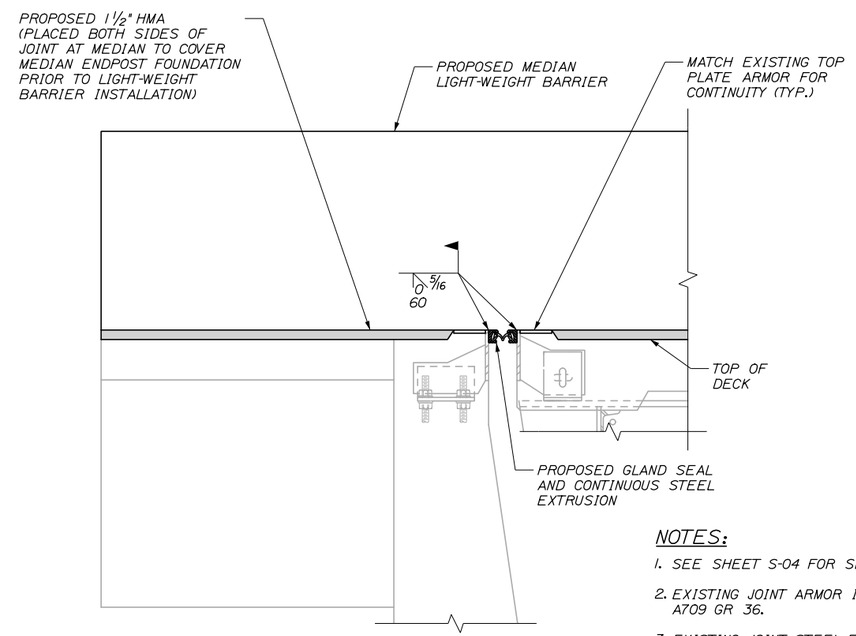

SECTION H-H
(PROPOSED CONDITION)
1" = 1'-0"

NOTES:

1. SEE SHEET S-04 FOR SECTION CUT LOCATIONS.
2. EXISTING JOINT ARMOR IS EITHER ASTM A7 GR 33 STEEL OR ASTM A709 GR 36.
3. EXISTING JOINT STEEL EXTRUSION IS WATSON BOWMAN ACME TYPE A FOR STRIP SEALS. PROPOSED STEEL EXTRUSION SHALL MATCH EXISTING.
4. CONTRACTOR SHALL VERIFY PROPOSED SEAL FITS THE EXISTING STEEL EXTRUSION PRIOR TO INSTALLATION.

Date:1/23/2015

Filename: 062_JointDets-45.dgn

Scale:

No.	Revision	By	Date

Designed by:

HNTB

CONSULTANT PROJECT MANAGER: Craig R. Morin, P.E.

	By	Date		By	Date
Designed	KEB	01/15	Checked	CRM	01/15
Drawn	MPC	01/15	In Charge of	RAL	01/15

HNTB CORPORATION
340 County Road, Suite 6-C
Westbrook, ME 04092
TEL (207) 774-5155
FAX (207) 228-0909

MAINE TURNPIKE

THE GOLD STAR MEMORIAL HIGHWAY

MTA PROJECT MANAGER: Ralph C. Norwood, IV, P.E., P.T.O.E.

BRIDGE REPAIRS
PAVEMENT REHABILITATION

EXIT 45 BRIDGE
JOINT DETAILS

SHEET NUMBER: S-07

CONTRACT:2015.03

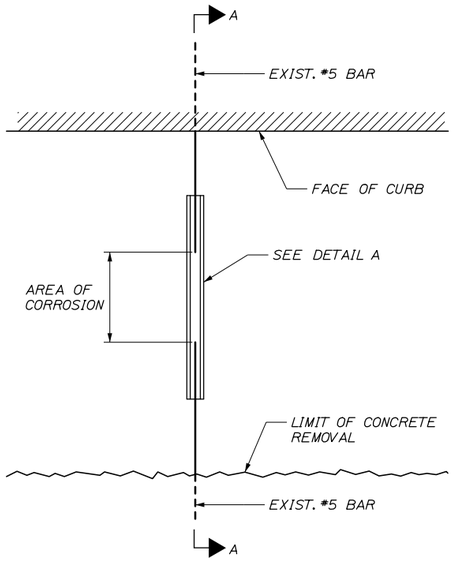

REPAIR TO CORRODED DECK REINFORCING - DETAIL 1

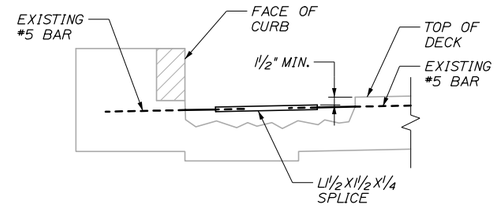

SECTION A-A

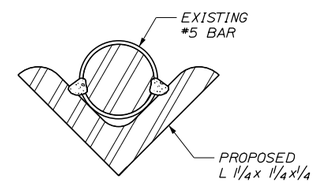

SECTION B-B

NOTES:

1. ALL REINFORCING BARS LOCATED WITHIN THE DESIGNATED REPAIR AREAS WHICH EXHIBIT MORE THAN 20% SECTION LOSS SHALL BE REPAIRED PER THE DETAILS THIS SHEET.
2. ALL REINFORCING BARS RECEIVING WELD MATERIAL SHALL BE THOROUGHLY CLEANED OF DEBRIS, SLAG, AND CORROSION PRODUCTS BEFORE WELDING. CLEANING SHALL BE BY SANDBLASTING TO SSPC- SP10.
3. THE ENDS OF EXISTING REINFORCING BARS TO BE WELDED WILL EXHIBIT NO MORE THAN 20% SECTION LOSS.
4. ALL WELDING SHALL BE IN ACCORDANCE WITH AWS D1.4: STRUCTURAL WELDING CODE - REINFORCING STEEL.
5. ANGLE IRON SPLICE PIECES SHALL BE L 1 1/4 X 1 1/4 X 1/4 (UNCOATED) CONFORMING TO ASTM A36. OTHER SIZES OF ANGLE IRON, HAVING A CROSS SECTIONAL AREA OF AT LEAST 0.56 SQUARE INCHES AND PROVIDING A MINIMUM CLEAR COVER TO THE DECK SURFACE OF AT LEAST 1.5", MAY BE SUBSTITUTED WITH APPROVAL OF THE RESIDENT.

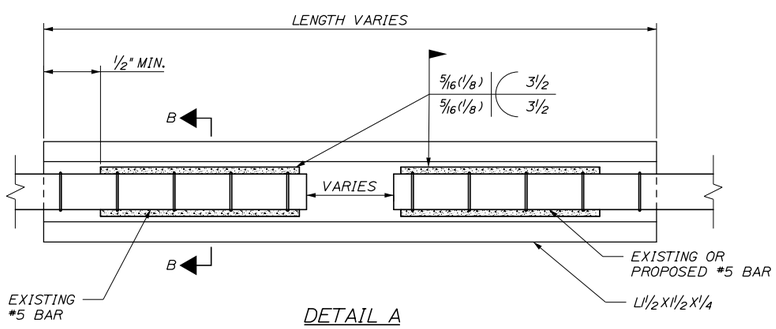

DETAIL A

Date:1/23/2015

Filename: 063_MiscDets-45.dgn

Scale:			
No.	Revision	By	Date

Designed by:

HNTB

CONSULTANT PROJECT MANAGER: Craig R. Morin, P.E.

	By	Date		By	Date
Designed	KEB	01/15	Checked	CRM	01/15
Drawn	MPC	01/15	In Charge of	RAL	01/15

HNTB CORPORATION
340 County Road, Suite 6-C
Westbrook, ME 04092
TEL (207) 774-5155
FAX (207) 228-0909

MAINE TURNPIKE

THE GOLD STAR MEMORIAL HIGHWAY

MTA PROJECT MANAGER: Ralph C. Norwood, IV, P.E., P.T.O.E.

BRIDGE REPAIRS
PAVEMENT REHABILITATION
EXIT 45 BRIDGE
MISCELLANEOUS DETAILS

SHEET NUMBER: S-08

CONTRACT:2015.03

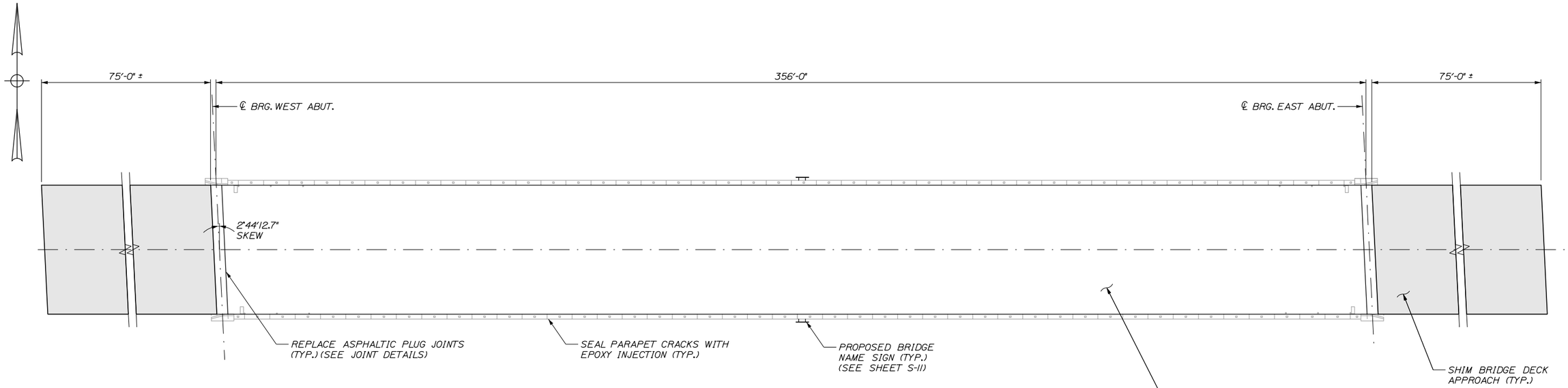

DECK PLAN
1/16" = 1'-0"

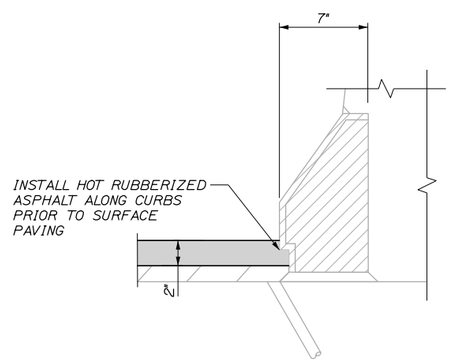

CURB DETAIL
2" = 1'-0"

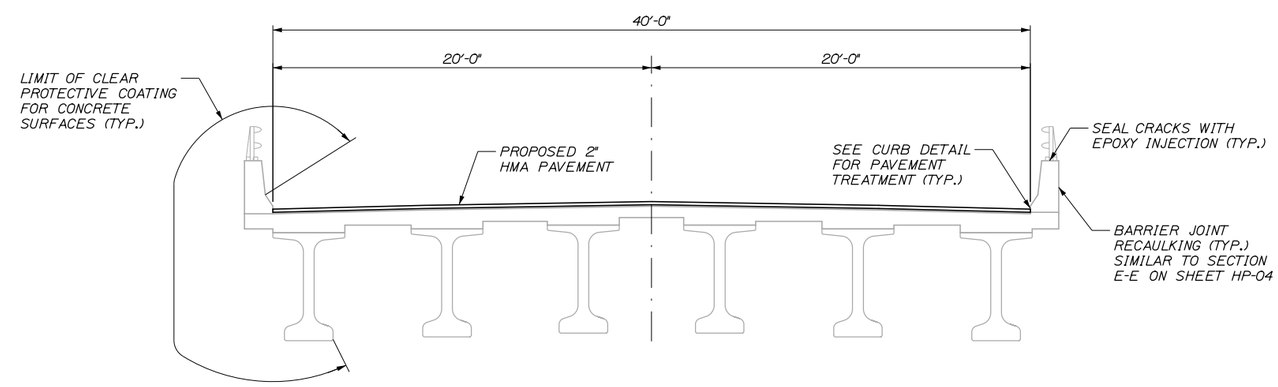

TYPICAL SECTION
1/4" = 1'-0"

NOTES:

1. WEARING SURFACE REMOVAL AND REPLACEMENT SHALL BE ACCOMPLISHED ACCORDING TO THE CONSTRUCTION SEQUENCING PRESENTED IN THE MAINTENANCE OF TRAFFIC DETAILS.
2. APPROACH PAVEMENT SHALL BE SHIMMED TO COMPENSATE FOR THE SETTLEMENT AND ROTATION OF THE APPROACH SLAB AND TO TIE INTO THE PROPOSED ASPHALTIC PLUG JOINT.
3. BRIDGE PARAPET CRACKS SHALL BE SEALED WITH EPOXY CRACK INJECTION. THE ACTUAL QUANTITY IS ESTIMATED AND SHALL BE DETERMINED IN THE FIELD BY THE RESIDENT IN ACCORDANCE WITH SPECIAL PROVISION 518.
4. BRIDGE RAILING DOES NOT NEED TO BE REMOVED DURING CLEAR PROTECTIVE COATING APPLICATION.
5. EXISTING BARRIER JOINTS SHALL BE RE-CAULKED PER SPECIFICATION 515.

Scale:

No.	Revision	By	Date

Designed by: HNTB

CONSULTANT PROJECT MANAGER: Craig R. Morin, P.E.

	By	Date		By	Date
Designed	KEB	01/15	Checked	CRM	01/15
Drawn	MPC	01/15	In Charge of	RAL	01/15

HNTB CORPORATION
340 County Road, Suite 6-C
Westbrook, ME 04092
TEL (207) 774-5155
FAX (207) 228-0909

MAINE TURNPIKE

THE GOLD STAR MEMORIAL HIGHWAY

MTA PROJECT MANAGER: Ralph C. Norwood, IV, P.E., P.T.O.E.

BRIDGE REPAIRS
PAVEMENT REHABILITATION
EXIT 46 BRIDGE
DECK PLAN AND TYPICAL SECTION

SHEET NUMBER: S-09

CONTRACT:2015.03

Date:1/23/2015

Filename: 064_DeckPlan-46.dgn

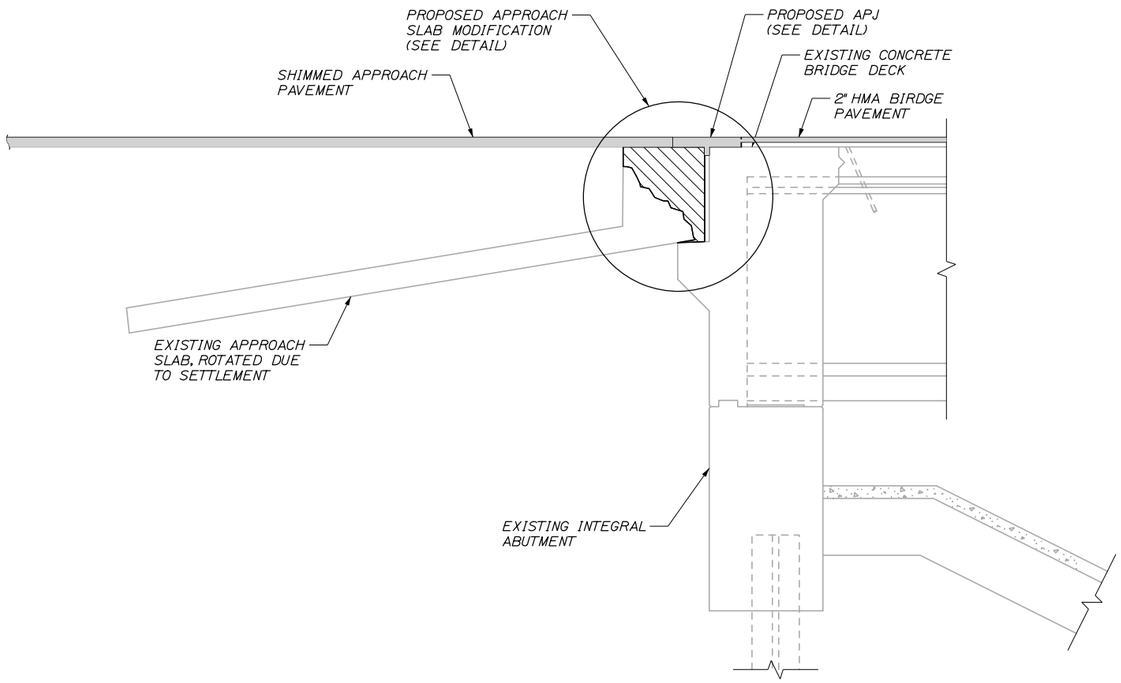

ABUTMENT AND APPROACH SLAB DETAIL
1/2" = 1'-0"

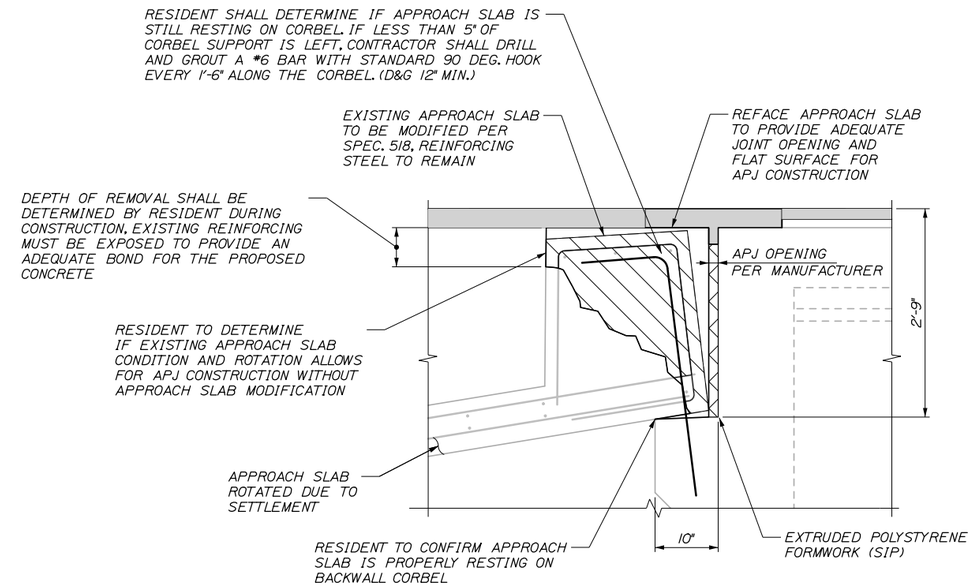

APPROACH SLAB MODIFICATION DETAIL
1" = 1'-0"

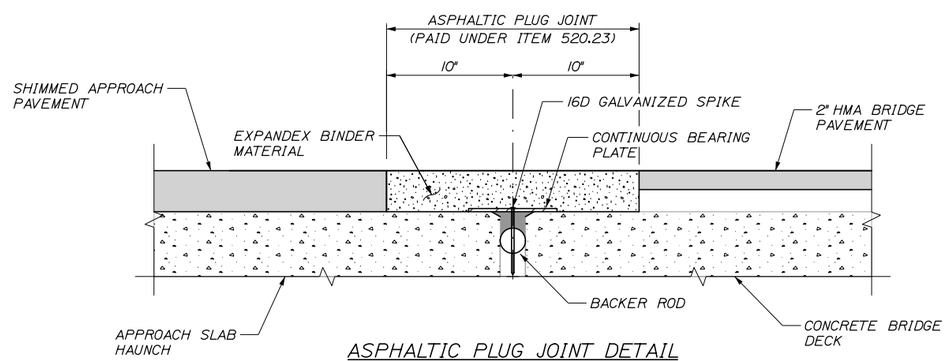

ASPHALTIC PLUG JOINT DETAIL
2" = 1'-0"

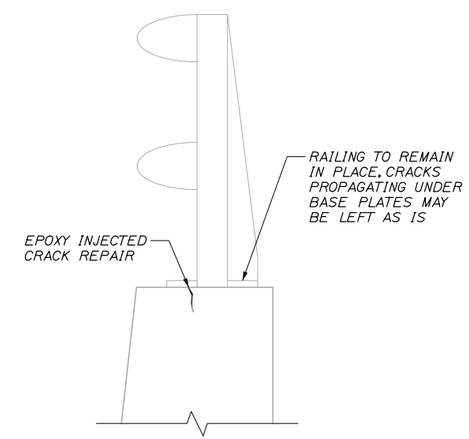

PARAPET EPOXY INJECTION DETAIL
2" = 1'-0"

Date:1/23/2015

Filename: 065_JointDets-46.dgn

No.	Revision	By	Date

Scale:

Designed by:

HNTB

CONSULTANT PROJECT MANAGER: Craig R. Morin, P.E.

	By	Date		By	Date
Designed	KEB	01/15	Checked	CRM	01/15
Drawn	MPC	01/15	In Charge of	RAL	01/15

HNTB CORPORATION
340 County Road, Suite 6-C
Westbrook, ME 04092
TEL (207) 774-5155
FAX (207) 228-0909

MAINE TURNPIKE

THE GOLD STAR MEMORIAL HIGHWAY

MTA PROJECT MANAGER: Ralph C. Norwood, IV, P.E., P.T.O.E.

BRIDGE REPAIRS
PAVEMENT REHABILITATION
EXIT 46 BRIDGE
JOINT AND PARAPET DETAILS

SHEET NUMBER: S-10

CONTRACT:2015.03

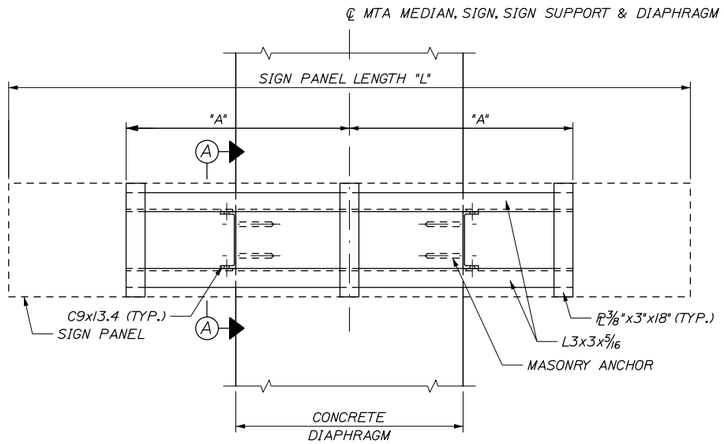

ELEVATION VIEW
1" = 1'-0"

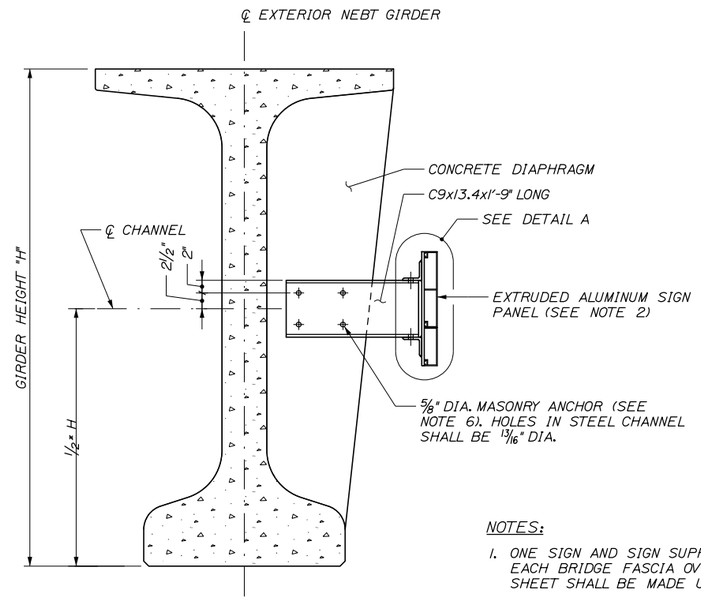

SECTION A-A
1" = 1'-0"

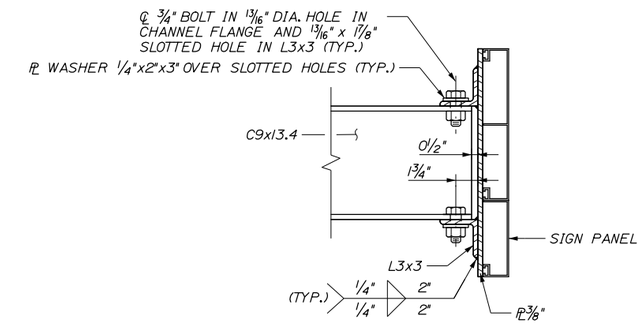

DETAIL A
(POST CLIPS NOT SHOWN FOR CLARITY)
2" = 1'-0"

SIGN SUPPORT DIMENSIONS	
SIGN LENGTH "L"	DIM "A"
6'-0" TO 7'-11"	2'-1"
8'-0" TO 9'-11"	2'-8"
10'-0" TO 11'-11"	3'-3"
12'-0" TO 13'-11"	3'-11"
14'-0" TO 16'-0"	4'-6"

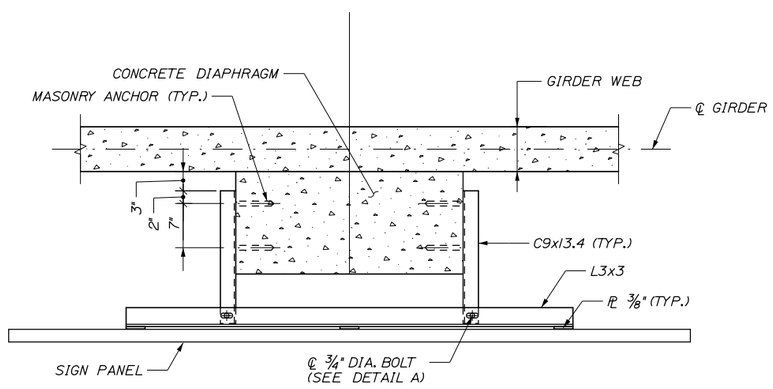

PLAN VIEW
1" = 1'-0"

NOTES:

1. ONE SIGN AND SIGN SUPPORT ASSEMBLY SHALL BE FABRICATED AND INSTALLED ON EACH BRIDGE FASCIA OVER THE TURNPIKE MEDIAN. PAYMENT FOR ALL WORK ON THIS SHEET SHALL BE MADE UNDER ITEM 645.12 "BRIDGE SIGN (SKYWAY DRIVE BRIDGE)".
2. THE CONTRACTOR SHALL VERIFY SIGN LENGTH WITH THE ENGINEER PRIOR TO FABRICATING SIGN SUPPORTS.
3. SIGN PANELS AND POST CLIPS/ATTACHMENT HARDWARE SHALL BE PROVIDED BY THE AUTHORITY. ATTACHMENT OF THE SIGN PANEL TO THE SIGN SUPPORTS SHALL BE THE RESPONSIBILITY OF THE CONTRACTOR
4. FOR ADDITIONAL DETAILS NOT SHOWN, SEE MAINE STANDARD DETAILS SHEET 645(3).
5. THE SIGN SUPPORT SHALL BE HOT DIPPED GALVANIZED AFTER FABRICATION IN ACCORDANCE WITH ASTM A123.
6. ALL BOLTS SHALL BE 3/4" DIA. A325, HOT DIP GALVANIZED.
7. MASONRY ANCHORS SHALL BE STAINLESS STEEL 5/8" DIA. "POWER-STUD" MANUFACTURED BY "POWERS FASTENERS" OR APPROVED EQUAL. MINIMUM ANCHOR EMBEDMENT SHALL BE 4". ANCHORS SHALL BE INSTALLED IN STRICT ACCORDANCE WITH MANUFACTURER SPECIFICATIONS.
8. BOLT HOLE DIMENSIONS AND EDGE DISTANCES NOT SHOWN SHALL BE IN CONFORMANCE WITH THE SPECIFICATIONS LISTED IN THE AISC "MANUAL OF STEEL CONSTRUCTION", LATEST EDITION.
9. SIGN SHALL NOT BE MOUNTED TO ANY PART OF THE NEBT CONCRETE GIRDER. ALL CONNECTIONS SHALL BE ATTACHED TO DIAPHRAGMS AS SHOWN.

SIGN SUPPORT DETAILS FOR BRIDGES WITH NEBT CONCRETE GIRDERS

Date:1/23/2015

Filename: 066_SignSupport-46.dgn

Scale:

No.	Revision	By	Date

Designed by:

HNTB

CONSULTANT PROJECT MANAGER: Craig R. Morin, P.E.

	By	Date		By	Date
Designed	KEB	01/15	Checked	CRM	01/15
Drawn	MPC	01/15	In Charge of	RAL	01/15

HNTB CORPORATION
340 County Road, Suite 6-C
Westbrook, ME 04092
TEL (207) 774-5155
FAX (207) 228-0909

MAINE TURNPIKE

THE GOLD STAR MEMORIAL HIGHWAY

MTA PROJECT MANAGER: Ralph C. Norwood, IV, P.E., P.T.O.E.

BRIDGE REPAIRS
PAVEMENT REHABILITATION
EXIT 46 BRIDGE
BRIDGE NAME SIGN DETAILS

SHEET NUMBER: S-11

CONTRACT:2015.03

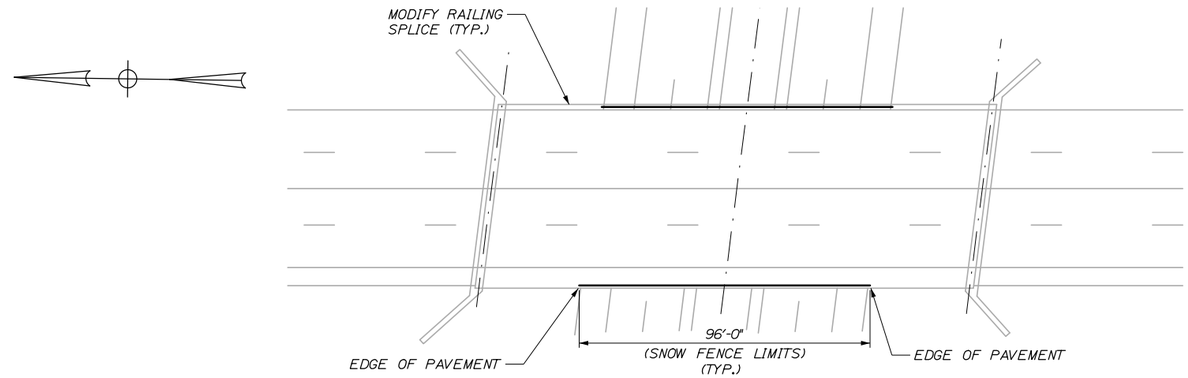

RUNNING HILL ROAD BRIDGE (MM 45.4)
1" = 25'

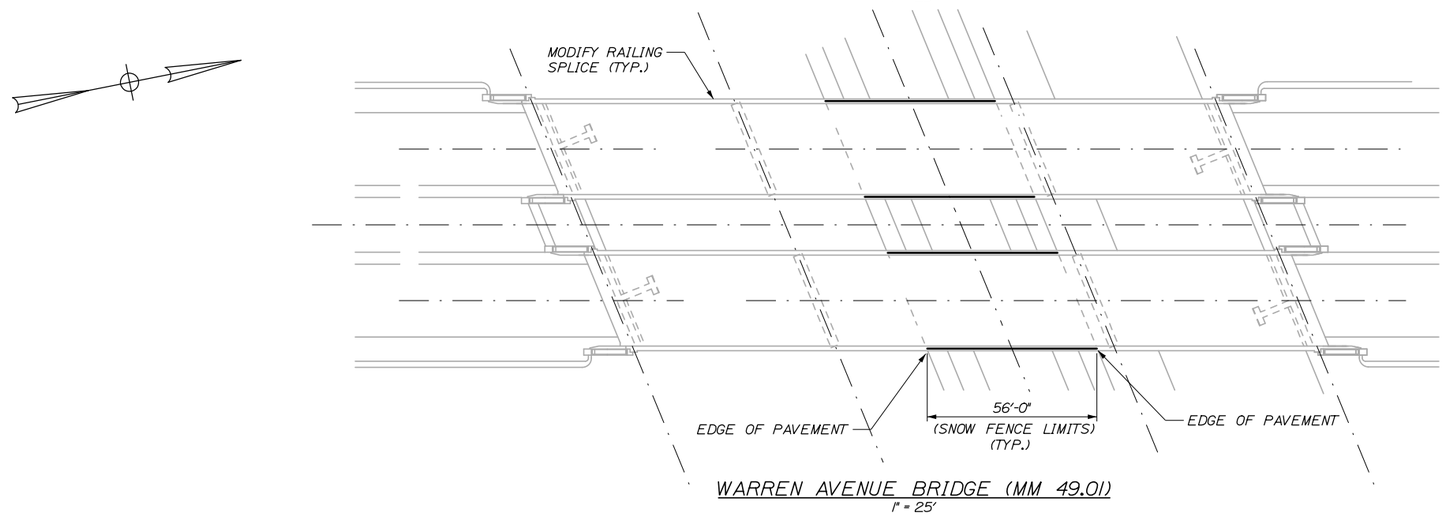

WARREN AVENUE BRIDGE (MM 49.01)
1" = 25'

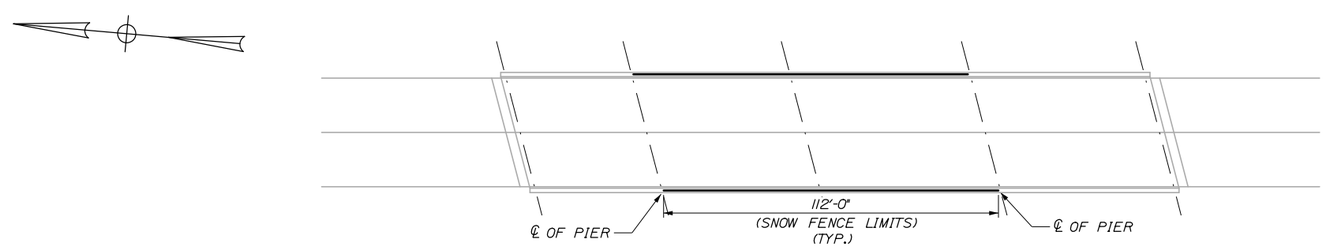

AUBURN STREET BRIDGE (FS 0.60)
1" = 25'

NOTES:

1. SEE SHEET S-13 AND S-14 FOR SNOW FENCE DETAILS.

2. SEE SHEET S-14 FOR SPLICE MODIFICATION DETAILS, ALL WORK RELATED TO SPLICE MODIFICATIONS SHALL BE PAID UNDER ITEM 507.095.

Date:1/23/2015

Filename: 067_DeckPlan-SnowFence.dgn

Scale:

No.	Revision	By	Date

Designed by:

HNTB

CONSULTANT PROJECT MANAGER: Craig R. Morin, P.E.

	By	Date		By	Date
Designed	KEB	01/15	Checked	CRM	01/15
Drawn	MPC	01/15	In Charge of	RAL	01/15

HNTB CORPORATION
340 County Road, Suite 6-C
Westbrook, ME 04092
TEL (207) 774-5155
FAX (207) 228-0909

MAINE TURNPIKE

THE GOLD STAR MEMORIAL HIGHWAY

MTA PROJECT MANAGER: Ralph C. Norwood, IV, P.E., P.T.O.E.

BRIDGE REPAIRS
PAVEMENT REHABILITATION

SNOW FENCE DETAILS I

SHEET NUMBER: S-12

CONTRACT:2015.03

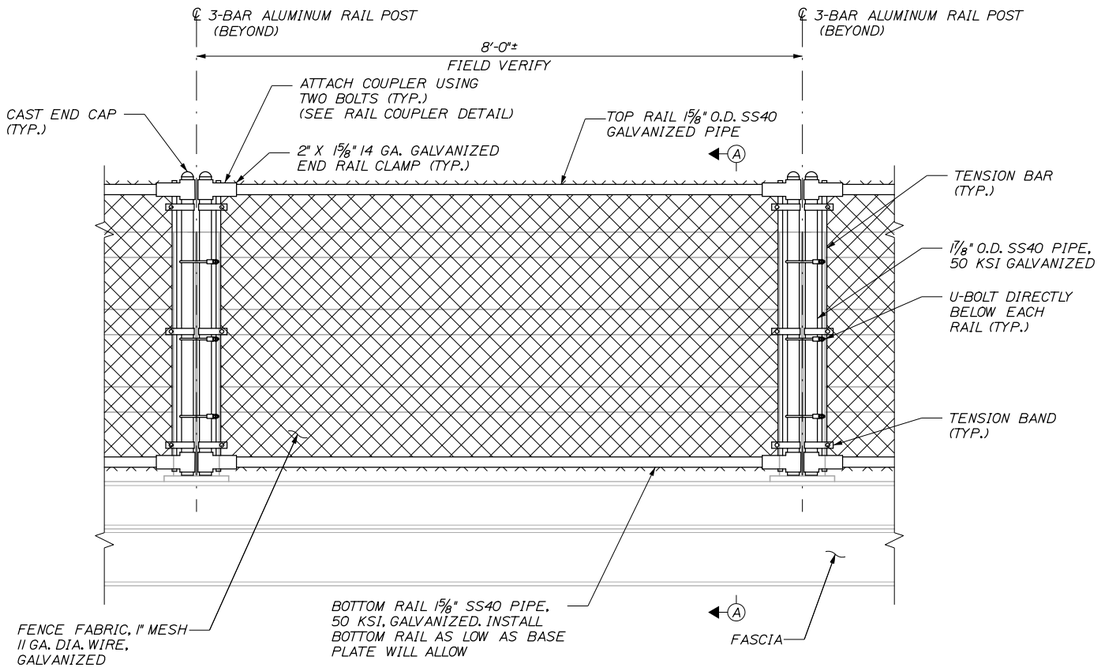

SNOW FENCE POST ATTACHMENT TO 3-BAR ALUMINUM RAIL

1" = 1'-0"

NOTE:
FENCE SHOWN FROM BACK OF BRIDGE RAIL.

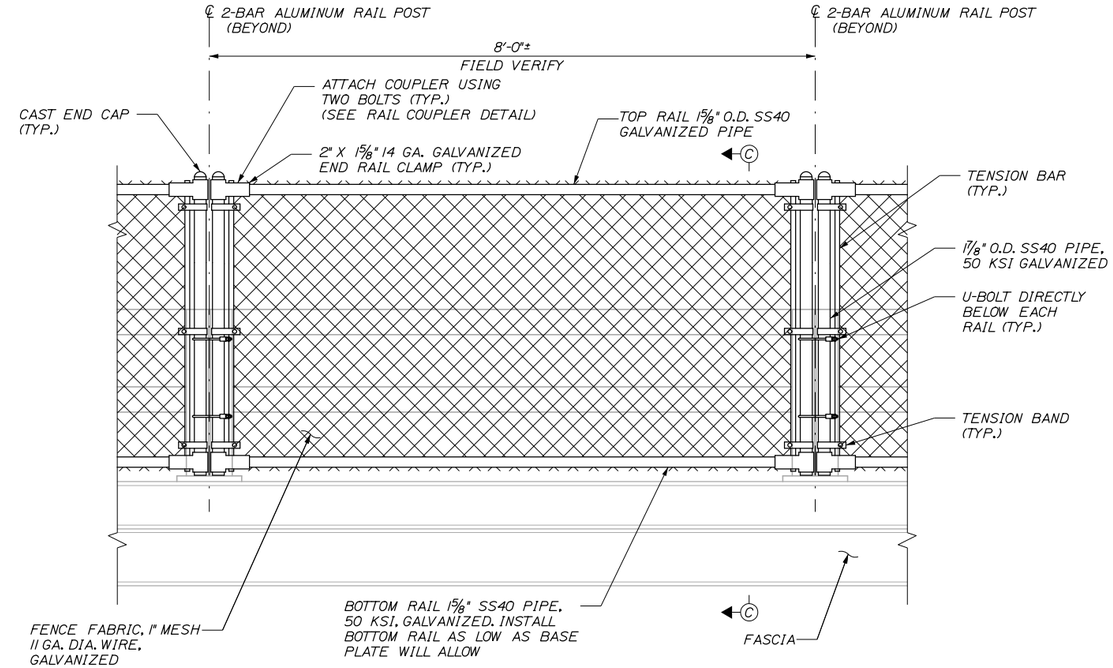

SNOW FENCE POST ATTACHMENT TO 2-BAR ALUMINUM RAIL

1" = 1'-0"

NOTE:
FENCE SHOWN FROM BACK OF BRIDGE RAIL.

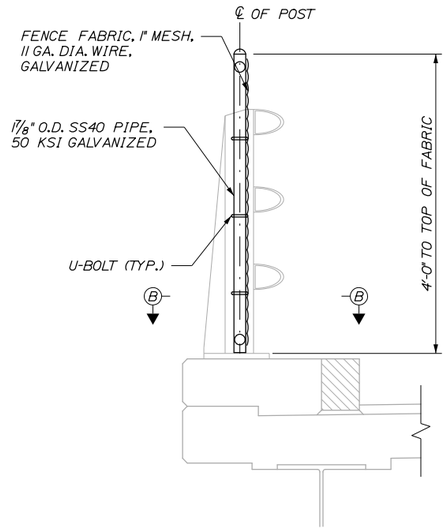

SECTION A-A

1" = 1'-0"

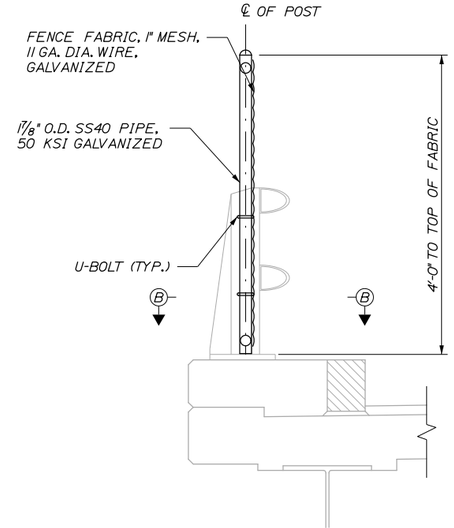

SECTION C-C

1" = 1'-0"

NOTES:

1. SEE SHEET S-14 FOR NOTES AND SECTION B-B.

Date:1/23/2015

Filename: 068_SnowFence.dgn

Scale:

No.	Revision	By	Date

Designed by:

HNTB

CONSULTANT PROJECT MANAGER: Craig R. Morin, P.E.

	By	Date		By	Date
Designed	KEB	01/15	Checked	CRM	01/15
Drawn	MPC	01/15	In Charge of	RAL	01/15

HNTB CORPORATION
340 County Road, Suite 6-C
Westbrook, ME 04092
TEL (207) 774-5155
FAX (207) 228-0909

MAINE TURNPIKE

THE GOLD STAR MEMORIAL HIGHWAY

MTA PROJECT MANAGER: Ralph C. Norwood, IV, P.E., P.T.O.E.

BRIDGE REPAIRS
PAVEMENT REHABILITATION

SNOW FENCE DETAILS II

SHEET NUMBER: S-13

CONTRACT:2015.03

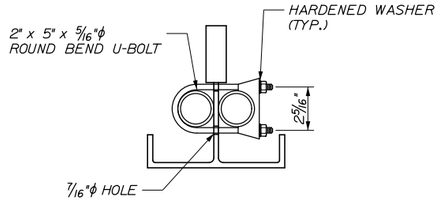

SECTION B-B
3" = 1'-0"

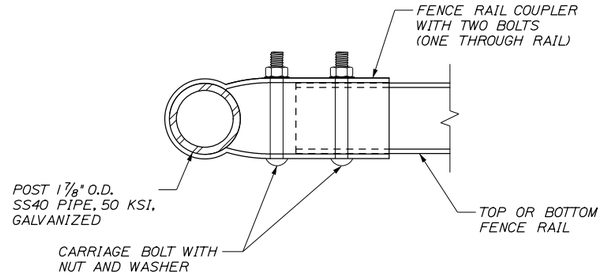

RAIL COUPLER DETAIL
6" = 1'-0"

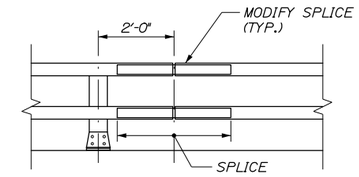

RAILING - ELEVATION
(TWO BAR RAILING SHOWN,
THREE BAR RAILING SIMILAR)
1/2" = 1'-0"

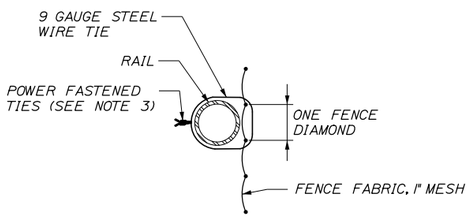

POWER FASTENED TIE
NOT TO SCALE

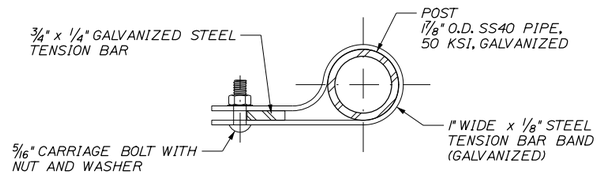

TENSION BAND DETAIL
6" = 1'-0"

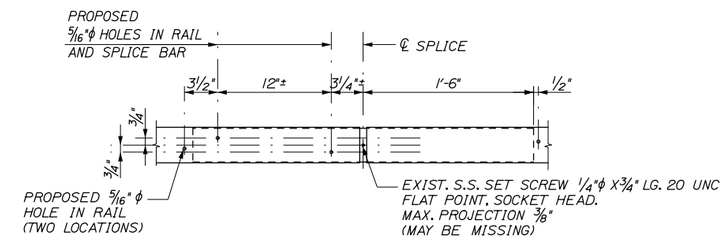

SPLICE MODIFICATION DETAIL
(ELEVATION VIEW FROM BACK SIDE OF RAIL)
1 1/2" = 1'-0"

NOTE:
RE-CENTER EXISTING SPLICE BAR AND DRILL TWO 5/16" ϕ HOLES AND INSTALL TWO 3/8" ϕ X 1", TYPE F. HEX. WASHER HEAD TAPPING SCREWS (STAINLESS). DRILL TWO ADDITIONAL 5/16" ϕ HOLES IN RAIL FOR SPLICE LOCATION VERIFICATION.

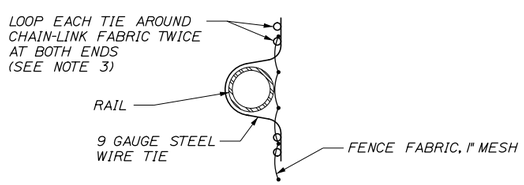

DOUBLE PIGTAILED TIE - ALTERNATE
NOT TO SCALE

NOTES:

1. INSTALL FENCE FABRIC BETWEEN ALUMINUM BRIDGE RAILS AND SNOW FENCE FRAME.
2. INSTALL CHAIN LINK FENCE FABRIC WITH TWISTED BARBS AT THE BOTTOM RAIL.
3. ROUND WIRE TIES SHALL BE 9 GAUGE ZINC-COATED STEEL PREFORMED TO THE RADIUS OF THE POST AND POWER-FASTENED TO WRAP 360 DEGREES AROUND THE POST AND ONE COMPLETE DIAMOND OF THE CHAIN-LINK FENCE. THE TWO ENDS SHALL BE TWISTED TOGETHER IN A CLOSE HELIX OF 1 1/2 MACHINE TURNS (3 FULL TWISTS) TIGHTLY AROUND THE POST AND CHAIN-LINK FABRIC. SPACE TIES @ 6" O.C. TO BOTTOM RAIL AND @ 12" O.C. TO ALL POSTS AND OTHER RAILS. TWISTED ENDS SHALL BE BENT DOWN UPON COMPLETION. ALTERNATIVELY, WIRE TIES MAY BE STANDARD ROUND 9 GAUGE ZINC-COATED STEEL. ALL TIES SHALL BE WRAPPED AROUND CHAIN-LINK FABRIC TWICE (DOUBLE PIGTAILED) AT BOTH ENDS. SPACE TIES @ 6" O.C. TO BOTTOM RAIL AND @ 12" O.C. TO ALL POSTS AND OTHER RAILS.
4. ALL BOLTS AND NUTS SHALL BE STEEL CONFORMING TO ASTM A307 AND ASTM A563 GRADE A RESPECTIVELY. WASHERS SHALL BE HARDENED STEEL COMMERCIAL TYPE A PLAIN AND SHALL MEET THE DIMENSIONAL REQUIREMENTS OF ANSI B18.22. ALL HARDWARE SHALL BE HOT-DIP GALVANIZED IN ACCORDANCE WITH AASHTO M111 (ASTM A 123) OR AASHTO M232 (ASTM A153) AS APPLICABLE.
5. SEE SHEET S-12 FOR SNOW FENCE LIMITS.
6. THE EXISTING RAILING SPLICES AT RUNNING HILL ROAD BRIDGE AND WARREN AVENUE BRIDGE SHALL BE REPAIRED BASED ON THE SPLICE MODIFICATION DETAIL PRESENTED.

Scale:

No.	Revision	By	Date

Designed by:

HNTB

CONSULTANT PROJECT MANAGER: Craig R. Morin, P.E.

	By	Date		By	Date
Designed	KEB	01/15	Checked	CRM	01/15
Drawn	MPC	01/15	In Charge of	RAL	01/15

HNTB CORPORATION
340 County Road, Suite 6-C
Westbrook, ME 04092
TEL (207) 774-5155
FAX (207) 228-0909

MAINE TURNPIKE

THE GOLD STAR MEMORIAL HIGHWAY

MTA PROJECT MANAGER: Ralph C. Norwood, IV, P.E., P.T.O.E.

BRIDGE REPAIRS
PAVEMENT REHABILITATION

SNOW FENCE DETAILS III

SHEET NUMBER: S-14

CONTRACT: 2015.03

Date: 1/23/2015
Filename: 069_SnowFenceDets.dgn

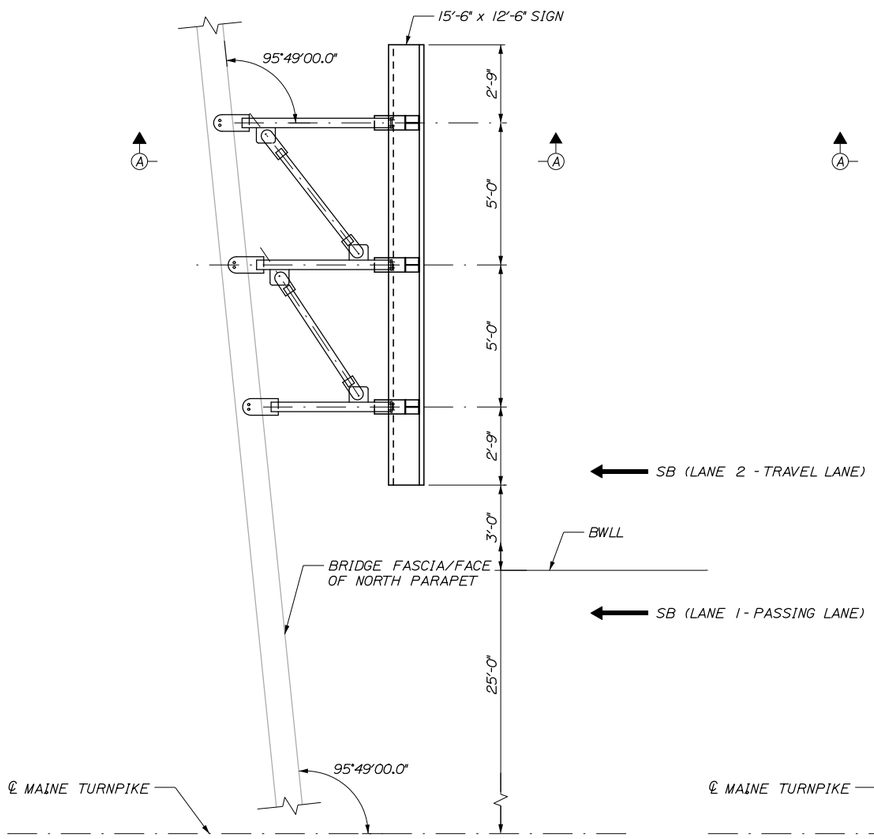

PLAN - TOP CHORD BRACING
3/8" = 1'-0"

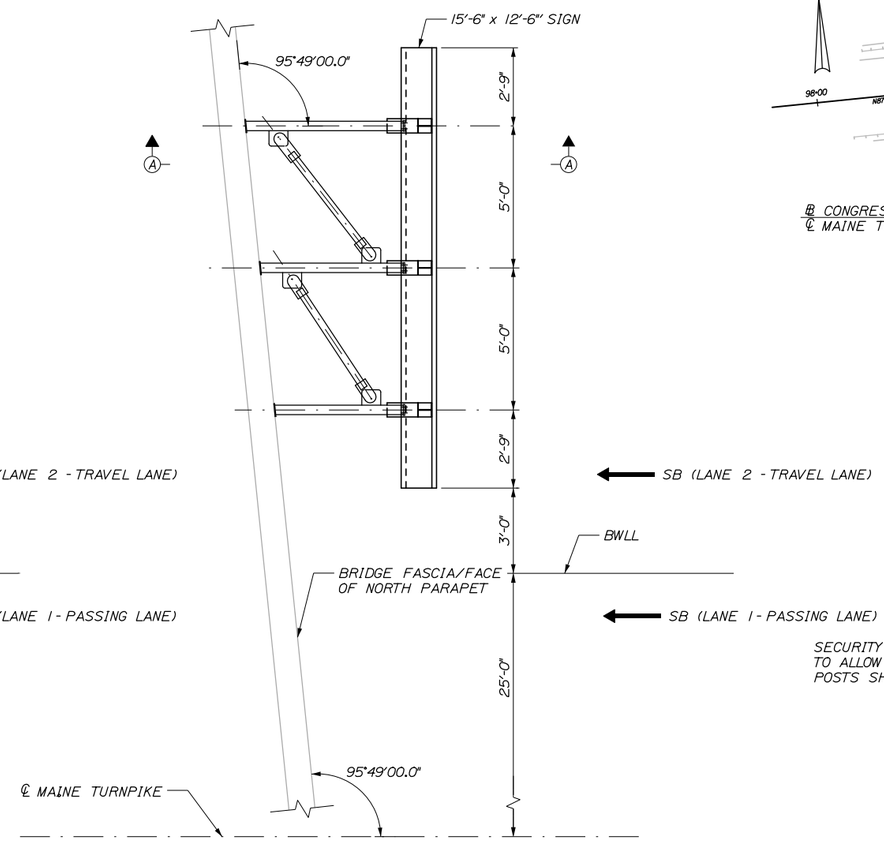

PLAN - BOTTOM CHORD BRACING
3/8" = 1'-0"

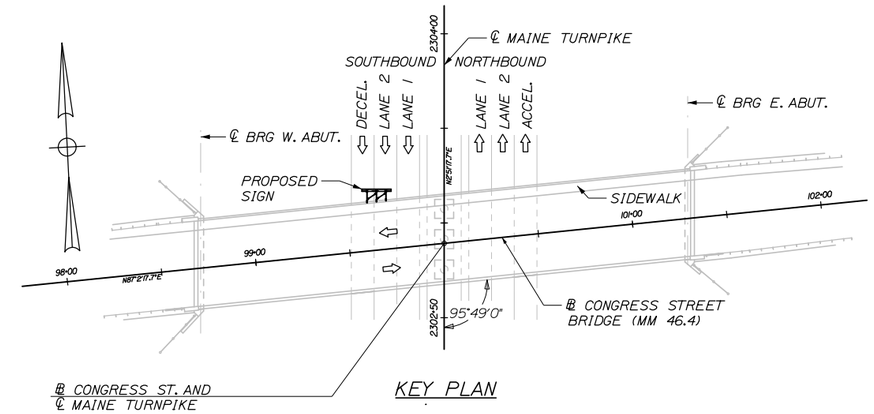

KEY PLAN

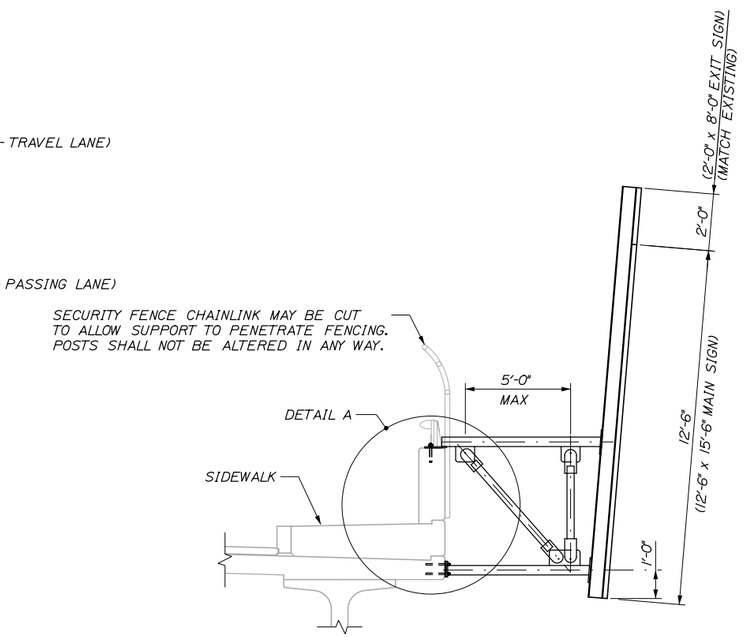

SECTION A-A
3/8" = 1'-0"

NOTES:

1. FOR SIGN NOTES AND DETAILS NOT SHOWN SEE SHEET S-16.
2. EXISTING ALUMINUM BRIDGE RAILING NOT SHOWN FOR CLARITY

Date:1/23/2015

Filename: 070_SignDets1.dgn

Scale:			
No.	Revision	By	Date

Designed by: HNTB

CONSULTANT PROJECT MANAGER: Craig R. Morin, P.E.

	By	Date		By	Date
Designed	KEB	01/15	Checked	CRM	01/15
Drawn	MPC	01/15	In Charge of	RAL	01/15

HNTB CORPORATION
340 County Road, Suite 6-C
Westbrook, ME 04092
TEL (207) 774-5155
FAX (207) 228-0909

MAINE TURNPIKE

THE GOLD STAR MEMORIAL HIGHWAY

MTA PROJECT MANAGER: Ralph C. Norwood, IV, P.E., P.T.O.E.

BRIDGE REPAIRS
PAVEMENT REHABILITATION
CONGRESS STREET UNDERPASS BRIDGE
BRIDGE MOUNTED SIGN DETAILS I

SHEET NUMBER: S-15

CONTRACT:2015.03

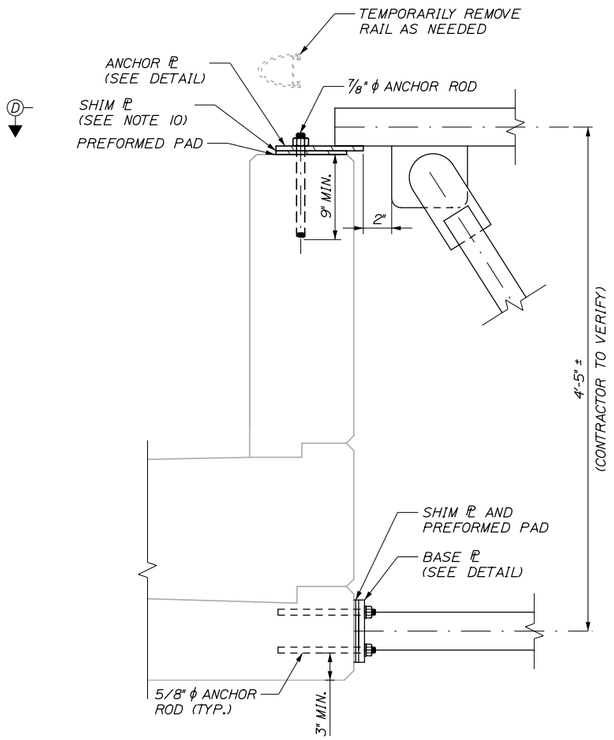

DETAIL A
1 1/2" = 1'-0"

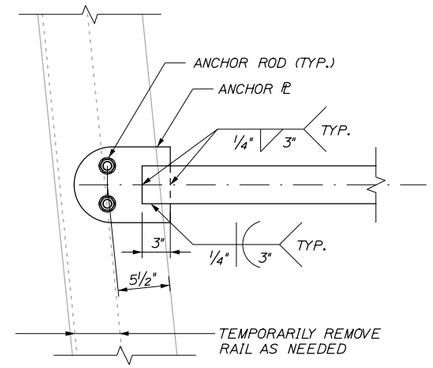

SECTION D-D
1 1/2" = 1'-0"

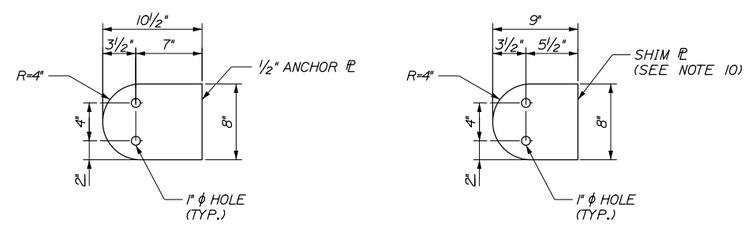

ANCHOR PLATE DETAIL
1 1/2" = 1'-0"

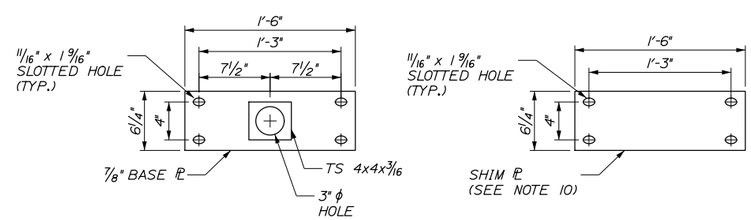

BOT. CHORD BASE PLATE DETAIL
1 1/2" = 1'-0"

NOTES:

1. FOR DETAILS NOT SHOWN SEE MAINEDOT STANDARD DETAILS 645(12) THROUGH 645(17) AND 645(20).
2. FOR ADDITIONAL NOTES SEE MAINEDOT STANDARD DETAILS 645(22) AND 645(23).
3. ALL ANCHOR RODS SHALL BE 7/8" DIAMETER ASTM F1554, GR 55. ANCHOR RODS AND RELATED HARDWARE SHALL BE HOT DIP GALVANIZED AFTER FABRICATION
4. ALL ANCHOR RODS SHALL BE ANCHORED IN PLACE USING A MATERIAL LISTED ON THE MAINEDOT QUALIFIED PRODUCTS LIST OF CONCRETE ADHESIVE ANCHOR SYSTEMS. CEMENTITIOUS ANCHORING MATERIALS ARE NOT PERMITTED. EMBEDMENT LENGTH SHALL BE SUFFICIENT TO DEVELOP THE TENSILE YIELD STRENGTH OF THE ANCHOR ROD.
5. ALL STEEL PLATES SHALL BE A MINIMUM OF 5/16" THICK AND SHALL MEET THE REQUIREMENTS OF ASTM A572, GRADE 50, UNLESS OTHERWISE NOTED.
6. HOLLOW STEEL SECTIONS SHALL BE A MINIMUM OF 5/16" THICK AND SHALL MEET THE REQUIREMENTS OF ASTM A500, GRADE B.
7. ALL SIGN SUPPORT COMPONENTS SHALL BE HOT DIP GALVANIZED AFTER FABRICATION.
8. ANCHORING EYELETS AS SHOWN IN THE STANDARD DETAILS ARE NOT REQUIRED.
9. HOLES THAT ARE FIELD DRILLED THROUGH GALVANIZED COMPONENTS SHALL HAVE AREAS OF DAMAGED GALVANIZED COATING REPAIRED IN ACCORDANCE WITH ASTM A780
10. THE CONTRACTOR SHALL FURNISH SHIM PLATES FOR USE AT THE TOP OF PARAPET CONNECTIONS AND BOTTOM CHORD BASE PLATE AS REQUIRED. APPROXIMATELY FOUR 1/8" THICK SHIM PLATES AT EACH LOCATION IS SUGGESTED.
11. FOLLOWING INSTALLATION THE ANNULAR SPACE BETWEEN THE ANCHOR RODS, SHIM PLATES AND ANCHOR PLATES SHALL BE COMPLETELY FILLED USING A MATERIAL SELECTED FROM THE MAINEDOT QUALIFIED PRODUCTS LIST OF CHEMICAL ANCHORING MATERIALS. THIS WORK SHALL BE DONE PRIOR TO INSTALLING THE NUTS AND WASHERS FOR THE ANCHOR RODS AND SHALL BE INCIDENTAL TO THE RELATED CONTRACT ITEM.

Date:1/23/2015

Filename: 071_SignDets2.dgn

Scale:

No.	Revision	By	Date

Designed by:

HNTB

CONSULTANT PROJECT MANAGER: Craig R. Morin, P.E.

	By	Date		By	Date
Designed	KEB	01/15	Checked	CRM	01/15
Drawn	MPC	01/15	In Charge of	RAL	01/15

HNTB CORPORATION
340 County Road, Suite 6-C
Westbrook, ME 04092
TEL (207) 774-5155
FAX (207) 228-0909

MAINE TURNPIKE

THE GOLD STAR MEMORIAL HIGHWAY

MTA PROJECT MANAGER: Ralph C. Norwood, IV, P.E., P.T.O.E.

BRIDGE REPAIRS
PAVEMENT REHABILITATION
CONGRESS STREET UNDERPASS BRIDGE
BRIDGE MOUNTED SIGN DETAILS II

SHEET NUMBER: S-16

CONTRACT:2015.03

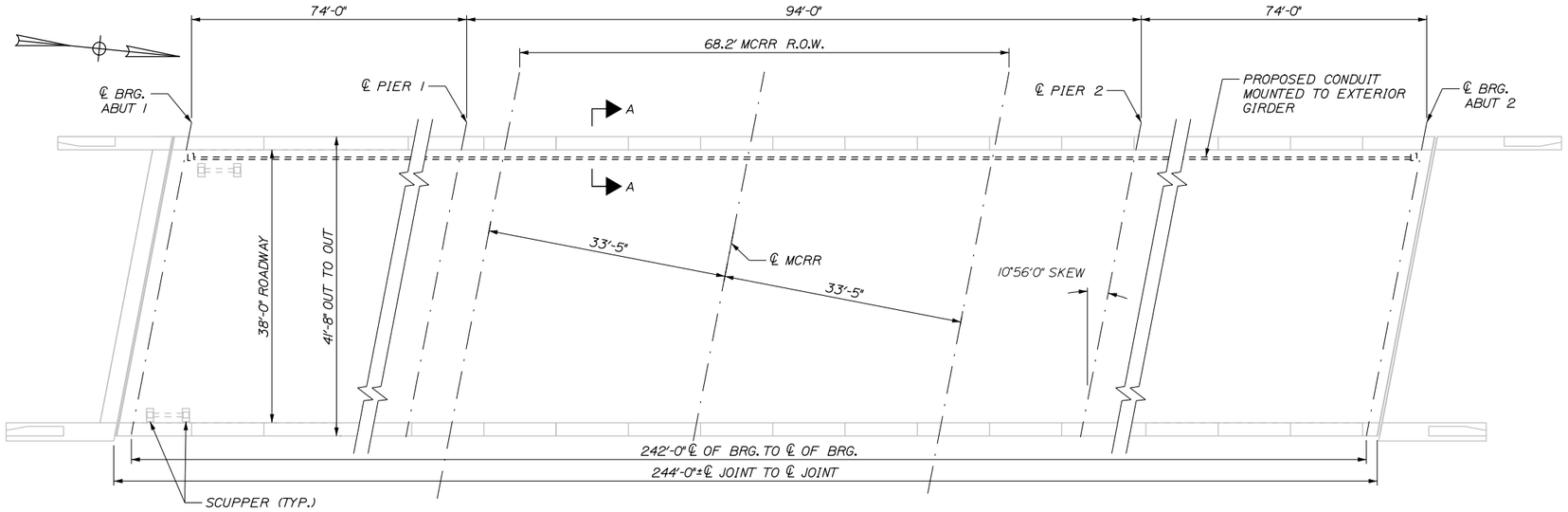

MCRR TURNPIKE (MM 47.9) - PLAN
(SOUTHBOUND ROADWAY)
1" = 10'

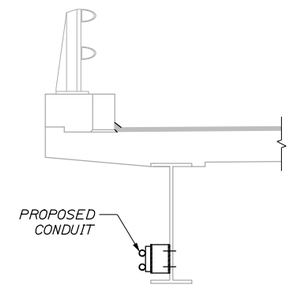

SECTION A-A
1/2" = 1'-0"

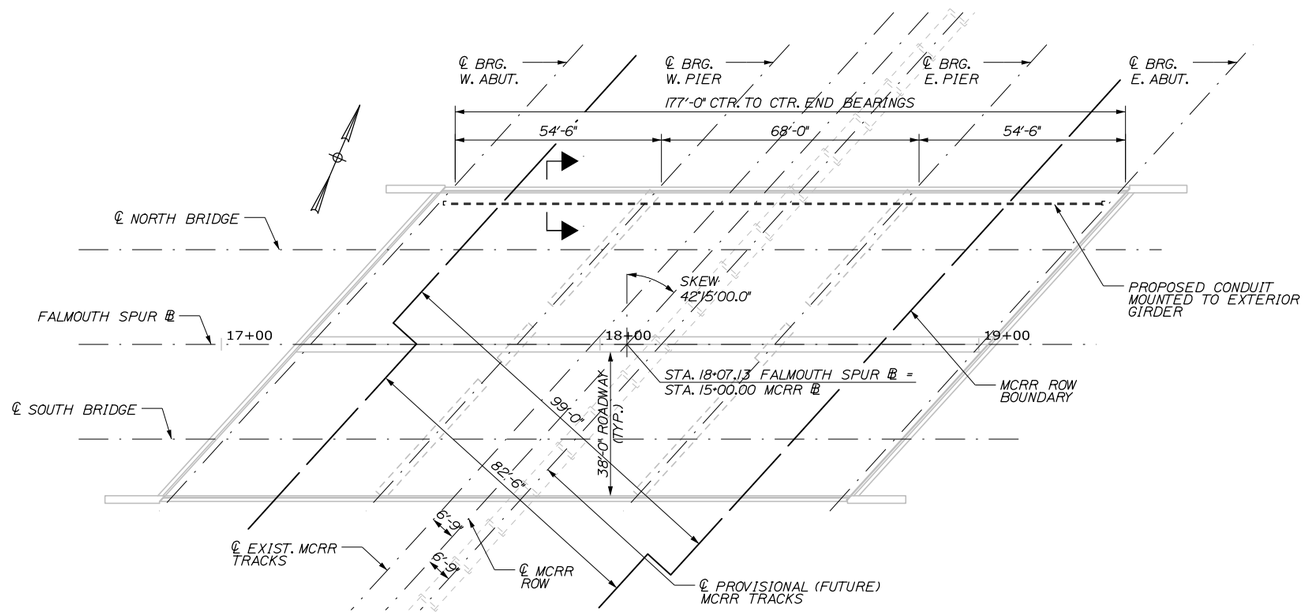

MCRR FALMOUTH SPUR (MM FS0.4) - PLAN
1" = 20'

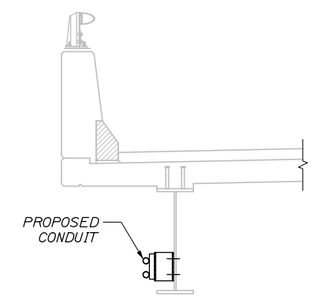

SECTION B-B
1/2" = 1'-0"

NOTES:

1. SEE SHEET S-18 FOR INSTALLATION LIMITS AND CONNECTION DETAILS.

Date:1/23/2015

Filename: 072_RR Conduit Plan.dgn

Scale:

No.	Revision	By	Date

Designed by:

HNTB

CONSULTANT PROJECT MANAGER: Craig R. Morin, P.E.

	By	Date		By	Date
Designed	KEB	01/15	Checked	CRM	01/15
Drawn	MPC	01/15	In Charge of	RAL	01/15

HNTB CORPORATION
340 County Road, Suite 6-C
Westbrook, ME 04092
TEL (207) 774-5155
FAX (207) 228-0909

MAINE TURNPIKE

THE GOLD STAR MEMORIAL HIGHWAY

MTA PROJECT MANAGER: Ralph C. Norwood, IV, P.E., P.T.O.E.

BRIDGE REPAIRS
PAVEMENT REHABILITATION
MCRR BRIDGE CONDUIT
PLANS AND SECTIONS

SHEET NUMBER: S-17

CONTRACT:2015.03

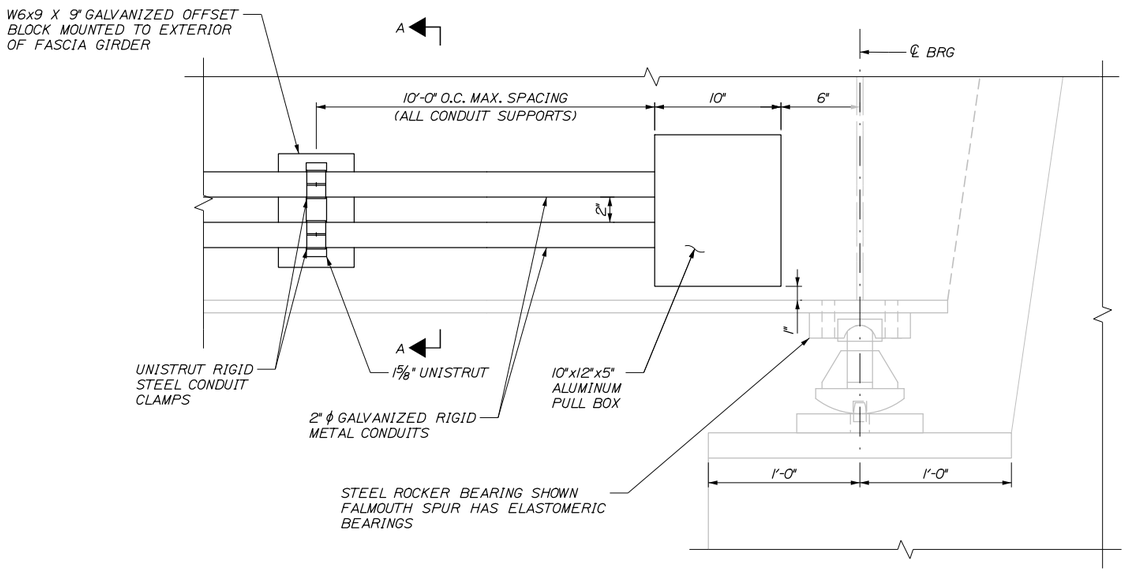

CONDUIT DETAIL

N.T.S.

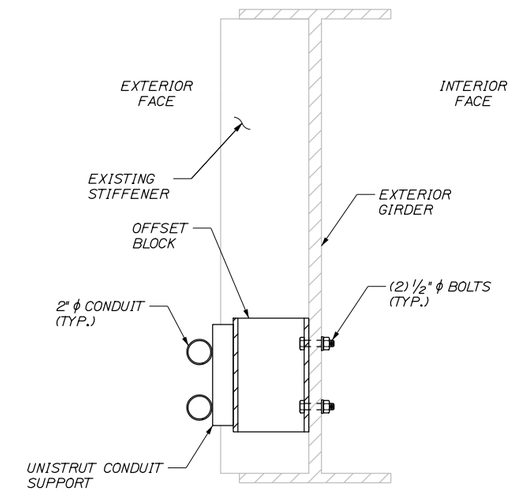

SECTION A-A

N.T.S.

CONDUIT NOTES:

1. USE ½" DIA. A-325 BOLTS TO ATTACH OFFSET BLOCKS TO BEAM WEB - 2 PER BLOCK.
2. GIRDERS HAVE EXISTING BEARING AND TRANSVERSE STIFFENERS. CONTRACTOR SHALL VERIFY LOCATION AND DEPTH OF STIFFENERS TO ENSURE CONDUIT WILL HAVE SUFFICIENT CLEARANCE DURING INSTALLATION.
3. ALL COMPONENTS AND FASTENERS SHALL BE HOT DIP GALVANIZED.

Date:1/23/2015

Filename: 073_RR Conduit Dets.dgn

Scale:

No.	Revision	By	Date

Designed by:

HNTB

CONSULTANT PROJECT MANAGER: Craig R. Morin, P.E.

	By	Date		By	Date
Designed	KEB	01/15	Checked	CRM	01/15
Drawn	MPC	01/15	In Charge of	RAL	01/15

HNTB CORPORATION
340 County Road, Suite 6-C
Westbrook, ME 04092
TEL (207) 774-5155
FAX (207) 228-0909

MAINE TURNPIKE

THE GOLD STAR MEMORIAL HIGHWAY

MTA PROJECT MANAGER: Ralph C. Norwood, IV, P.E., P.T.O.E.

BRIDGE REPAIRS
PAVEMENT REHABILITATION

MCRR BRIDGE CONDUIT DETAILS

SHEET NUMBER: S-18

CONTRACT:2015.03

MAINE TURNPIKE

MAINE TURNPIKE Trans pass

MAINE TURNPIKE AUTHORITY

JULIAN R. COLES, CHAIRMAN
PATRICK F. BUTLER, VICE CHAIRMAN
LUCIEN B. GOSSELIN, MEMBER
SAMUEL M. ZAITLIN, MEMBER
EARL L. ADAMS, MEMBER
JOHN G. MELROSE, EX-OFFICIO
PAUL E. VIOLETTE, EXECUTIVE DIRECTOR

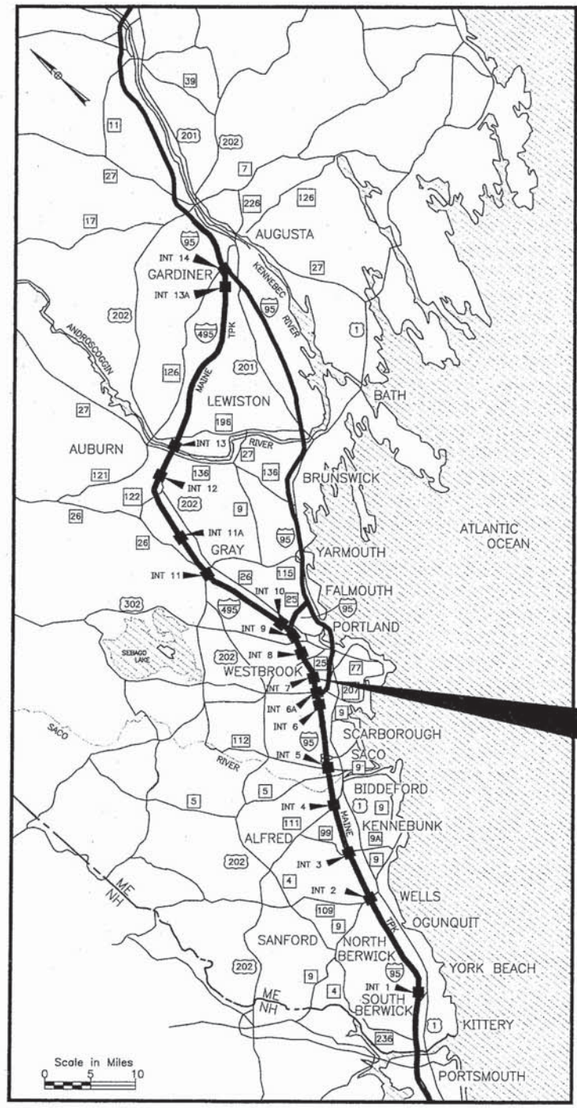

CONTRACT 2000.19
SOUTH PORTLAND INTERCHANGE
MILE 42.85

LOCATION MAP

INDEX OF SHEETS

1	TITLE SHEET
2	SPEC'S, INDEX, QUANTITIES, & NOTES
3	PROFILE
4	MAINTENANCE OF TRAFFIC I
5	MAINTENANCE OF TRAFFIC II
6	TRAFFIC SIGN SUMMARY I
7	SUPERSTRUCTURE DETAILS
8	ABUTMENT MODIFICATIONS
9	EXPANSION JOINT DETAILS I
10	EXPANSION JOINT DETAILS II
11	MISCELLANEOUS DETAILS
12	REINFORCING SCHEDULE

CONTRACT 2000.19
SOUTH PORTLAND INTERCHANGE
BRIDGE AND APPROACH REPAIRS
MILE 42.85

Contract 2000.19

STATE OF MAINE
DEPARTMENT OF TRANSPORTATION

COMMISSIONER — DATE

BUREAU DIRECTOR AND CHIEF ENGINEER — DATE

HNTB
ARCHITECTS ENGINEERS PLANNERS

STATE OF MAINE
ROLAND A. LAVALLEE
6452
REGISTERED PROFESSIONAL ENGINEER

ROLAND A. LAVALLEE P.E., PLS
VICE PRESIDENT
DIRECTOR OF OPERATIONS

DATE 11/13/00

APPROVED:
MAINE TURNPIKE AUTHORITY

CHAIRMAN

EXECUTIVE DIRECTOR

DATE

SPECIFICATIONS

DESIGN

AASHTO STANDARD SPECIFICATIONS FOR HIGHWAY BRIDGES 1992 AND INTERIM SPECIFICATIONS 1994.

CONTRACT

STATE OF MAINE, DEPARTMENT OF TRANSPORTATION, STANDARD SPECIFICATIONS, HIGHWAY AND BRIDGES, REVISION OF OCTOBER 1990.

MATERIALS

CONCRETE

ALL CONCRETE SHALL BE CLASS AAA, f'c = 4,500 P.S.I.

REINFORCING STEEL

ASTM 615 GRADE 60, (ALL BARS EPOXY-COATED)

STRUCTURAL STEEL

EXISTING STRUCTURAL STEEL IS ASTM A7, GRADE 33

GENERAL NOTES

1. PLANS OF EXISTING BRIDGES ARE AVAILABLE AT THE AUTHORITY'S OFFICE AT 430 RIVERSIDE ST., PORTLAND, MAINE.
2. REINFORCING STEEL SHALL HAVE A CLEAR COVER OF 2", UNLESS OTHERWISE NOTED.
3. ALL PROPOSED STEEL REINFORCING SHALL BE EPOXY COATED. FOR STEEL REINFORCING SCHEDULE, SEE SHEET 12.
4. CHAMFER ALL EXPOSED EDGES 3/4", UNLESS OTHERWISE NOTED.
5. SEE APPENDIX A FOR WIDE LOAD SIGNAGE PLAN. THE FINAL LOCATION SHALL BE DETERMINED IN THE FIELD BY THE ENGINEER.

ITEM NO.	DESCRIPTION	QUANTITY	UNIT
202.1271	REMOVAL OF EXISTING BITUMINOUS PAVEMENT AND MEMBRANE(770 SY)	1	LS
403.08	HOT BITUMINOUS PAVEMENT, GRADING C	270	TON
409.15	BITUMINOUS TACK COAT, APPLIED	25	GAL
419.30	SAWING BITUMINOUS PAVEMENT	50	LF
502.261	STRUCTURAL CONCRETE, HIGH EARLY STRENGTH	5	CY
502.631	BRIDGE CONCRETE REPAIRS	100	SF
504.741	GUTTER PLATE	232	LF
508.13	MEMBRANE WATERPROOFING (770 SY)	1	LS
520.21	EXPANSION DEVICE – GLAND SEAL	2	EA
526.305	CONCRETE BARRIER, SUPPLIED BY AUTHORITY	40	LF
527.102	TEMPORARY IMPACT ATTENUATOR SYSTEM – 35 MPH	2	UNIT
606.3606	GUARDRAIL REMOVE AND RESET, DOUBLE RAIL	710	LF
606.48	SINGLE GALVANIZED STEEL POST	10	EA
609.31	CURB TYPE 3	300	LF
627.861	TEMPORARY FLEXIBLE DELINEATOR POST	40	EA
632.06	BERM DROPOFF CORRECTION–GRAVEL	20	CY
652.30	FLASHING ARROW BOARD	2	EA
652.33	DRUM	85	EA
652.35	CONSTRUCTION SIGNS	850	SF
652.361	MAINTENANCE OF TRAFFIC CONTROL DEVICES	1	LS
652.38	FLAGGERS	40	MH
656.632	30" TEMPORARY SILT FENCE	100	LF
659.10	MOBILIZATION	1	LS

Scale:

No.	Revision	By	Date

Designed by:

HNTB
ARCHITECTS ENGINEERS PLANNERS

	By	Date		By	Date
Designed	TRC	11/00	Checked	JRL	11/00
Drawn	TRC	11/00	In Charge of	RAL	11/00

HNTB CORPORATION
2 Thomas Drive
Westbrook, ME 04092
TEL (207) 774-5155
FAX (207) 772-7410

MAINE TURNPIKE AUTHORITY

MAINE TURNPIKE Trans pass

SOUTH PORTLAND INTERCHANGE BRIDGE
SPECIFICATIONS, INDEX QUANTITES, & NOTES

CONTRACT: 2000.19

SHEET NUMBER: 2 OF 12

EASTSIDE CROSS SLOPES

−1/4"/FT	−1/8"/FT
SHOULDER	WESTBOUND ONRAMP LANE

WESTSIDE CROSS SLOPES

MATCH EXISTING SHOULDERS	MATCH EXISTING	2+00
	−0.75%	1+75
	0.00%	1+50
	+0.75%	1+25
	+1.00%	1+00
	+1.50%	0+75
	+2.50%	0+50
	MATCH EXISTING	0+30

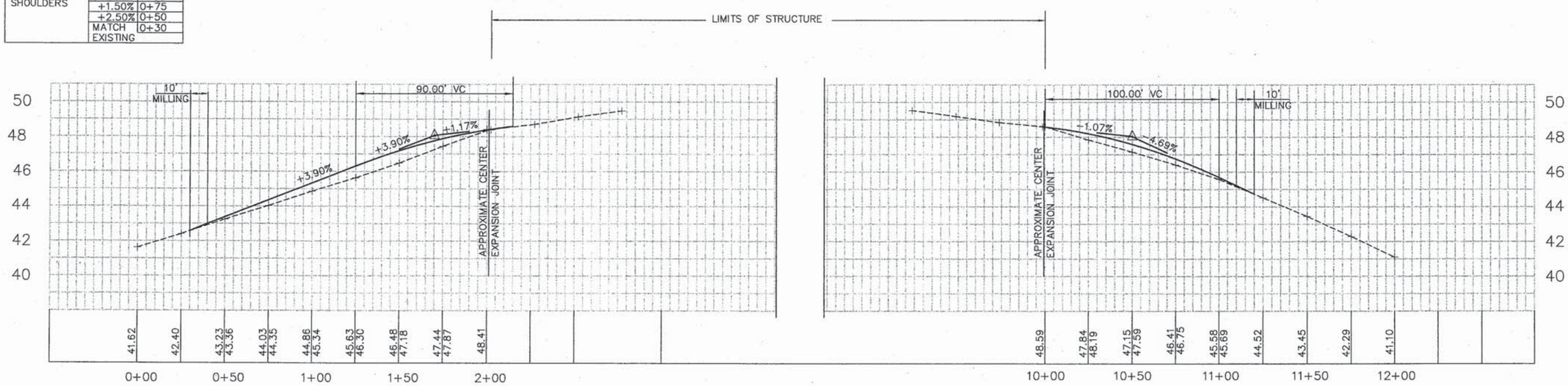

YELLOW LINE ELEVATIONS

NOTES:

1. ELEVATIONS BASED ON BENCH MARK CIRCULAR DISK LOCATED IN NORTHWEST ENDPOST. ASSUME ELEVATION 50.00.
2. ELEVATIONS WERE RECORDED AT 25 FOOT INCREMENTS ON EACH SIDE OF EAST AND WEST JOINTS ALONG THE SOLID YELLOW LINE.
3. STATIONS SHOWN ON THIS PROFILE REPRESENT THE 25 FOOT INCREMENTS AND ARE INDEPENDENT OF THE STATIONING SHOWN ON THE MAINTENANCE OF TRAFFIC.
4. THE MAXIMUM SHIM DEPTH SHALL BE 1 1/2" UNLESS OTHERWISE APPROVED BY THE ENGINEER.
5. SEE SPECIAL PROVISIONS FOR PAYMENT REGARDING OFFSET BLOCK AND GUARDRAIL REMOVAL AND RESET DURING THE PAVEMENT SHIMMING.

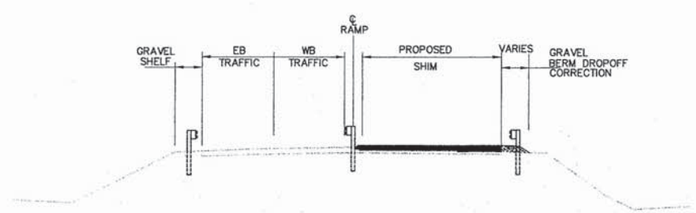

PROPOSED SHIM CONDITIONS

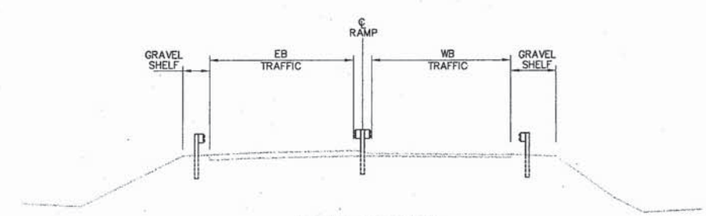

EXISTING CONDITIONS

Scale:
HORIZONTAL SCALE 1" = 30'
VERTICAL SCALE 1" = 3'

No.	Revision	By	Date

Designed by:

HNTB
ARCHITECTS ENGINEERS PLANNERS

	By	Date		By	Date
Designed	JRL	11/00	Checked	CAH	11/00
Drawn	JRL	11/00	In Charge of	RAL	11/00

HNTB CORPORATION
2 Thomas Drive
Westbrook, ME 04092
TEL (207) 774-5155
FAX (207) 772-7410

MAINE TURNPIKE AUTHORITY

MAINE TURNPIKE Trans pass

SOUTH PORTLAND INTERCHANGE BRIDGE
PROFILE

CONTRACT: 2000.19

SHEET NUMBER: 3 OF 12

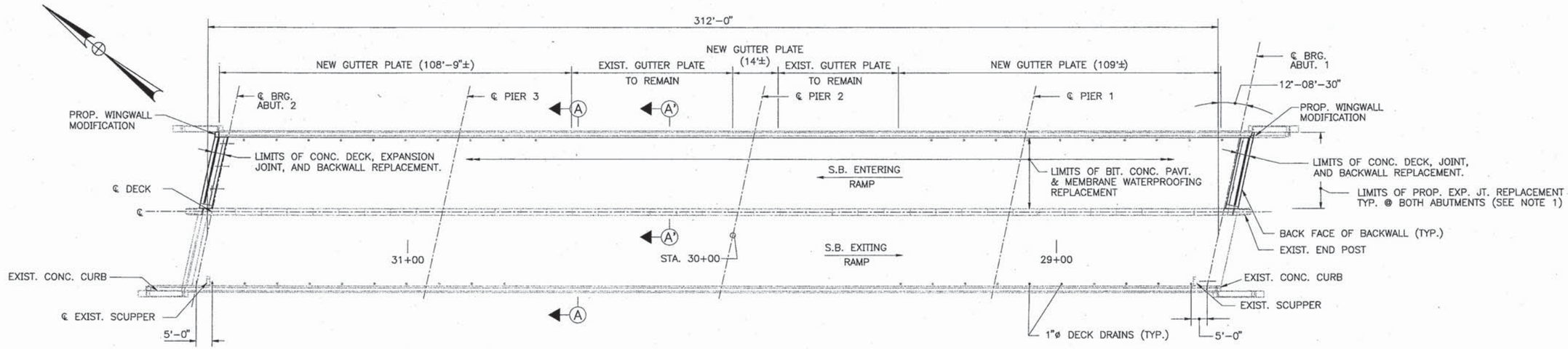

DECK PLAN
1/16"=1'-0"

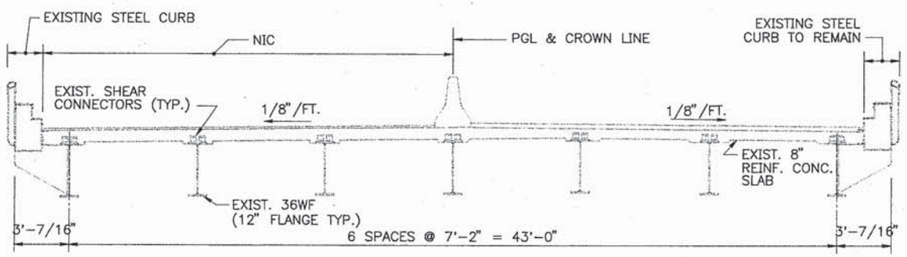

SECTION A–A – EXISTING
1/4"=1'-0"

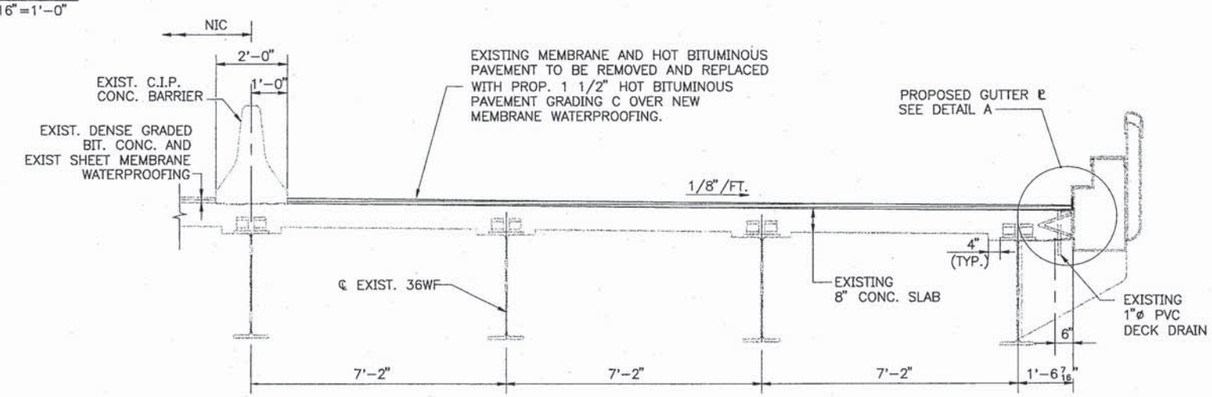

SECTION A'–A' – PROPOSED
1/2"=1'-0"

NOTES

1. FOR PROPOSED EXP. JT. REPLACEMENT, SEE SHT. 9, 10, & 11.
2. FOR PROPOSED WINGWALL MODIFICATION, SEE SHT. 11.
3. WORK UNDER ITEM 504.74 CONSISTS OF PROVIDING THE MATERIALS, LABOR AND EQUIPMENT NECESSARY TO REMOVE ANY EXISTING STEEL PLATES OR ANGLES FROM THE FLANGE OF THE C9, PREPARING THE C9 FLANGE FOR WELDING, AND FURNISHING AND INSTALLING THE PROPOSED GUTTER PLATE. ALL WORK SHALL CONFORM TO THE APPLICABLE REQUIREMENTS OF SECTION 504.
4. DO NOT COVER DECK DRAINS WITH MEMBRANE. DEPRESS DRAINS 2" BELOW TOP OF SLAB. PROVIDE 23 GAUGE GALVANIZED SCREENS (1/8" MESH) OVER DRAINS.

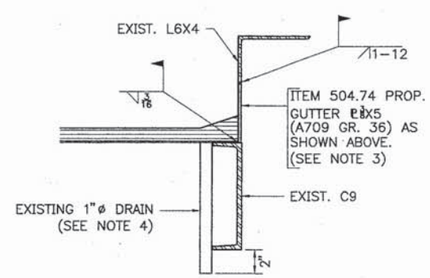

DETAIL A
2"=1'-0"

Scale: AS NOTED				Designed by: HNTB ARCHITECTS ENGINEERS PLANNERS						HNTB CORPORATION 2 Thomas Drive Westbrook, ME 04092 TEL (207) 774-5155 FAX (207) 772-7410	MAINE TURNPIKE AUTHORITY	SOUTH PORTLAND INTERCHANGE BRIDGE
No.	Revision	By	Date		By	Date		By	Date			SUPERSTRUCTURE DETAILS
				Designed	TRC	11/00	Checked	JRL	11/00			SHEET NUMBER:
				Drawn	TRC	11/00	In Charge of	RAL	11/00			CONTRACT: 2000.19 7 OF 12

H:\99002A\959.013\PLDTS\FINAL PLANS\SH197A.DWG 11/20/00 09:32

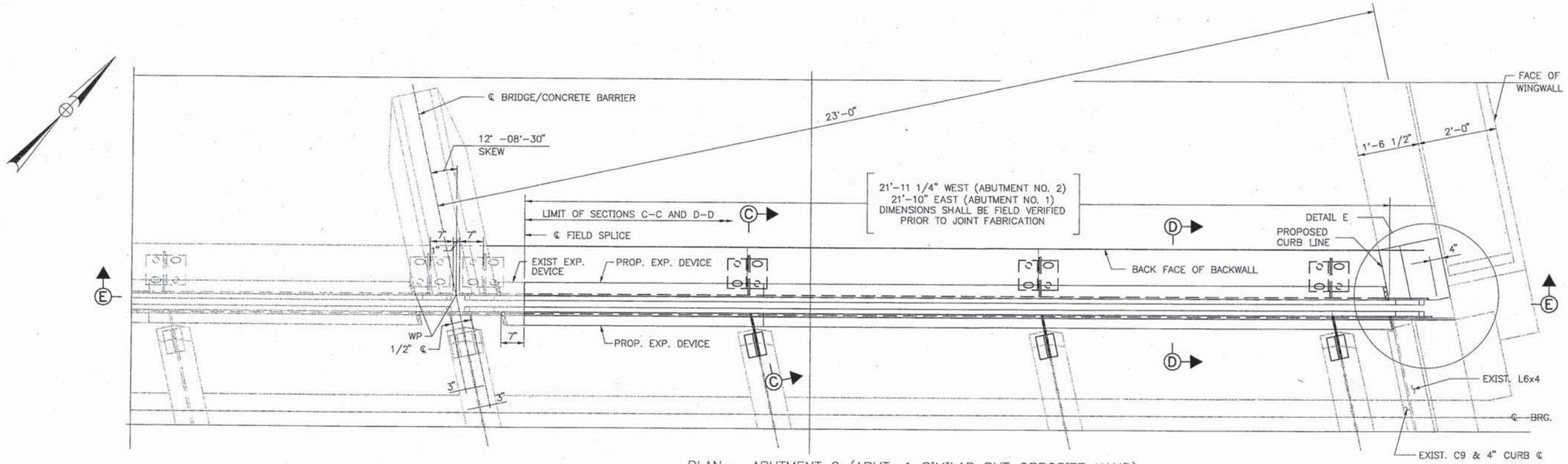

PLAN – ABUTMENT 2 (ABUT. 1 SIMILAR BUT OPPOSITE HAND)
3/4 " = 1'-0"

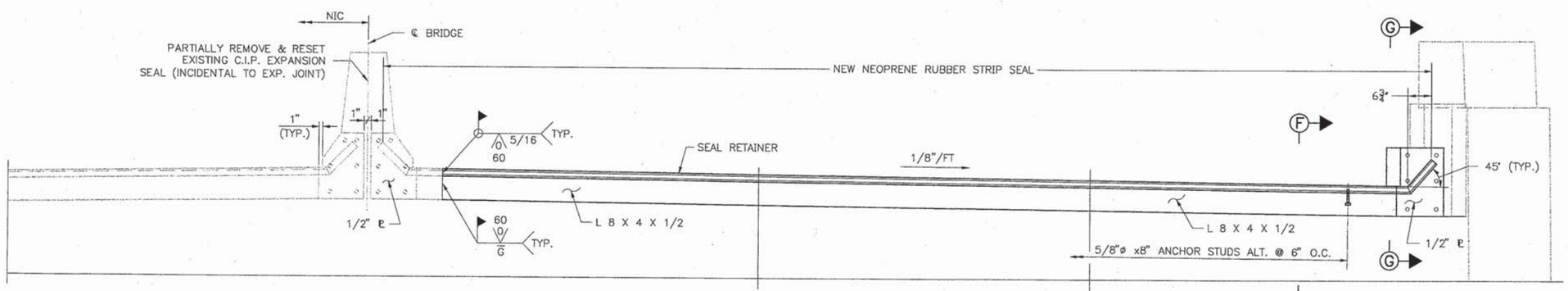

SECTION E–E
3/4 " = 1'-0"

NOTES

1. FOR SECTIONS C–C, & D–D SEE SHT. NO. 10.
2. EXPANSION JOINT AT ABUTMENT NO. 2 SHOWN, EXPANSION JOINT AT ABUTMENT NO. 1 SIMILAR BUT OPPOSITE HAND.
3. FOR SECTIONS F–F, G–G AND DETAIL E SEE SHEET NO. 11, MISCELLANEOI

No.	Revision	By	Date

Scale: AS NOTED

Designed by:

HNTB
ARCHITECTS ENGINEERS PLANNERS

	By	Date		By	Date
Designed	TRC	11/00	Checked	JRL	11/00
Drawn	TRC	11/00	In Charge of	RAL	11/00

HNTB CORPORATION
2 Thomas Drive
Westbrook, ME 04092
TEL (207) 774-5155
FAX (207) 772-7410

MAINE TURNPIKE AUTHORITY

MAINE TURNPIKE Trans pass

SOUTH PORTLAND
INTERCHANGE BRIDGE
EXPANSION JOINT
DETAILS I

CONTRACT: 2000.19

SHEET NUMBER:
9 OF 12

HNTB96X24\95\013\PLDTS\FINAL PLANS\SHT09A.DWG 11/20/00 09:36

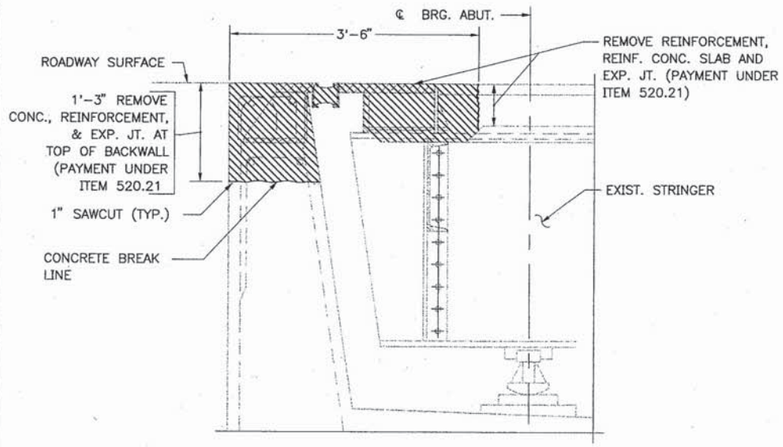

EXISTING SECTION C-C
1" = 1'-0"

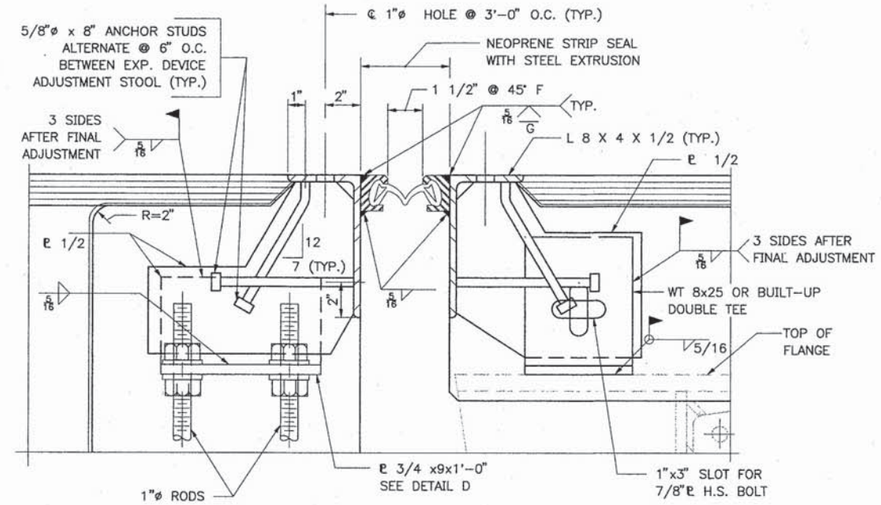

DETAIL C
3" = 1'-0"

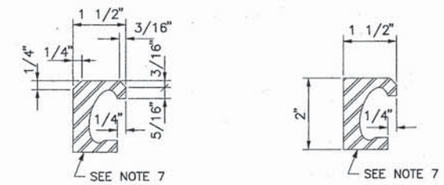

STEEL EXTRUSION FOR ROADWAY AREAS

STEEL EXTRUSION FOR OTHER AREAS

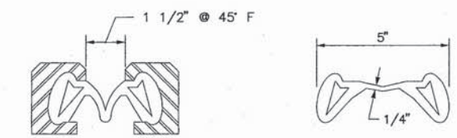

STRIP SEAL DETAILS
HALF SIZE

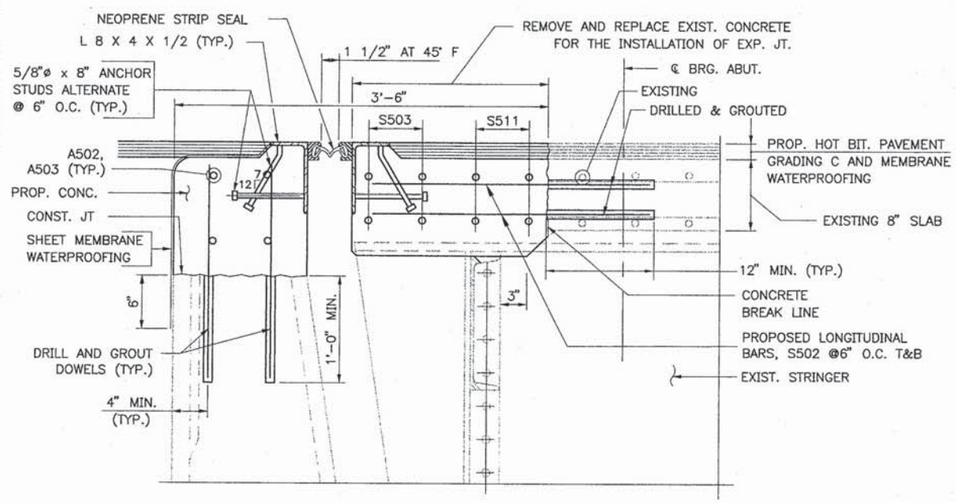

PROPOSED SECTION D-D
1 1/2 " = 1'-0"

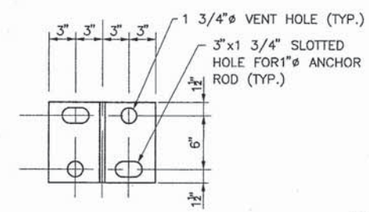

DETAIL D
1 1/2 " = 1'-0"

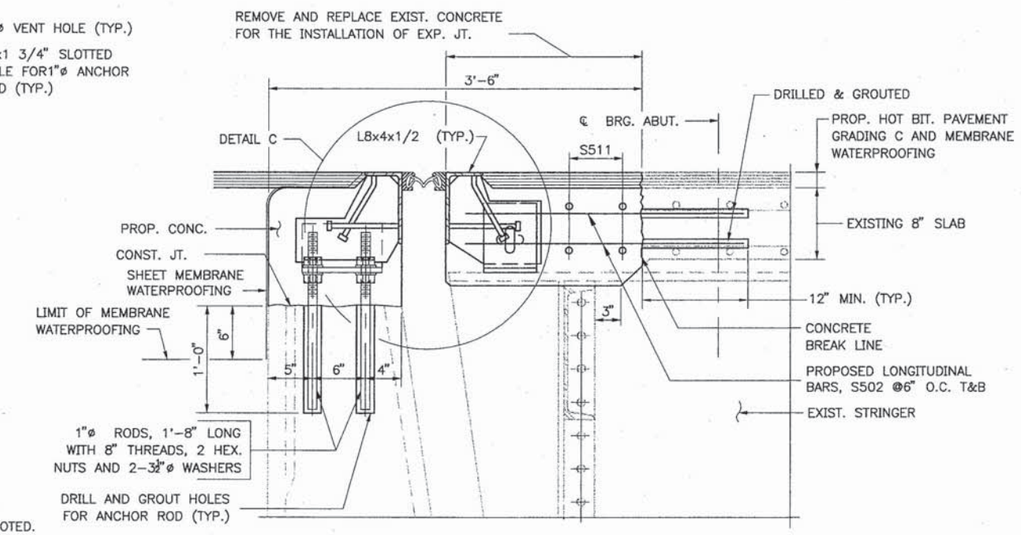

PROPOSED SECTION C-C
1 1/2 " = 1'-0"

EXPANSION DEVICE NOTES

1. SHOP DRAWINGS OF THE EXPANSION DEVICE SHALL BE SUBMITTED FOR APPROVAL OF THE ENGINEER.
2. THE EXPANSION DEVICE SHALL BE SET TO AN OPENING OF 1 1/2 INCHES IN THE FABRICATION SHOP AND SHALL BE SECURED TO THE STRINGER AND/OR BACK WALL WHEN THE AMBIENT TEMPERATURE IS BETWEEN 40° F AND 80°F. THE OPENING SHALL BE ADJUSTED TO REFLECT THE TEMPERATURE OF THE STRUCTURE AT THE TIME OF INSTALLATION. SETTING SCHEDULE FOR THE OPENING SHALL BE SUPPLIED BY THE MANUFACTURER OF THE SEAL.
3. ALL EXPOSED SURFACES OF ANGLES TO BE FIELD PAINTED.
4. ALL STEEL COMPONENTS SHALL BE ASTM A709 GR. 36, UNLESS OTHERWISE NOTED.
5. ALL WELDS ARE 5/16 " CONTINUOUS FILLETS, EXCEPT AS NOTED.
6. ALL STEEL SURFACES THAT WILL BE IMBEDDED IN CONCRETE SHALL BE COATED WITH EPOXY BONDING COMPOUND.
7. STEEL EXTRUSION SHALL BE WATSON BOWMAN ACME TYPE A STRIP SEAL STEEL EXTRUSION. NO SUBSTITUTIONS WILL BE PERMITTED.

Scale: AS NOTED

No.	Revision	By	Date

Designed by:

HNTB
ARCHITECTS ENGINEERS PLANNERS

	By	Date		By	Date
Designed	TRC	11/00	Checked	JRL	11/00
Drawn	TRC	11/00	In Charge of	RAL	11/00

HNTB CORPORATION
2 Thomas Drive
Westbrook, ME 04092
TEL (207) 774-5155
FAX (207) 772-7410

MAINE TURNPIKE AUTHORITY

MAINE TURNPIKE Trans pass

SOUTH PORTLAND INTERCHANGE BRIDGE
EXPANSION JOINT DETAILS II

CONTRACT: 2000.19

SHEET NUMBER: 10 OF 12

H:\HNTB\96\959\013\PLOTS\FINAL PLANS\SH10A.DWG 11/14/00 11:37

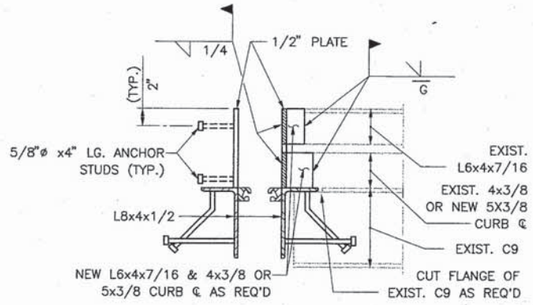

SECTION F–F (FROM SHEET NO. 9)

1 1/2 " = 1'–0"

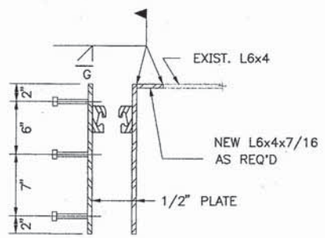

SECTION G–G (FROM SHEET NO. 9)

1 1/2 " = 1'–0"

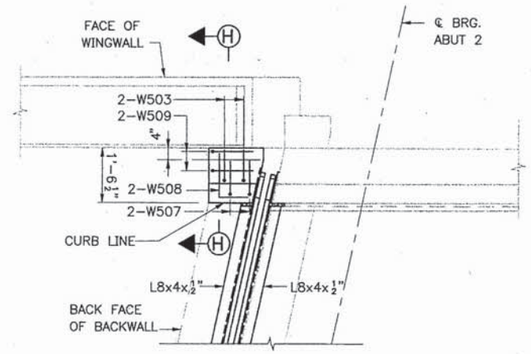

PLAN – N.W. WINGWALL

1/2"=1'–0"

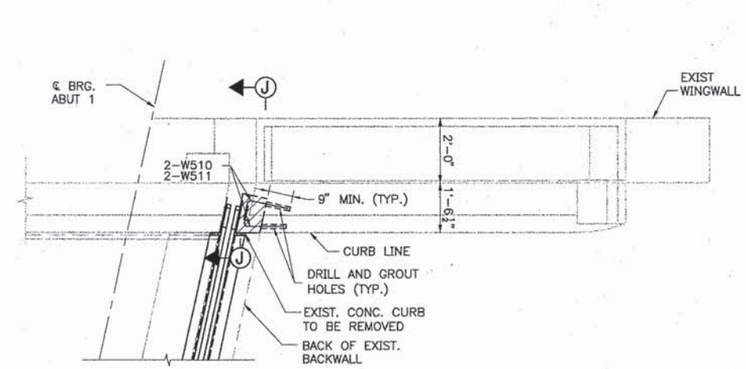

PLAN – N.E. WINGWALL

1/2"=1'–0"

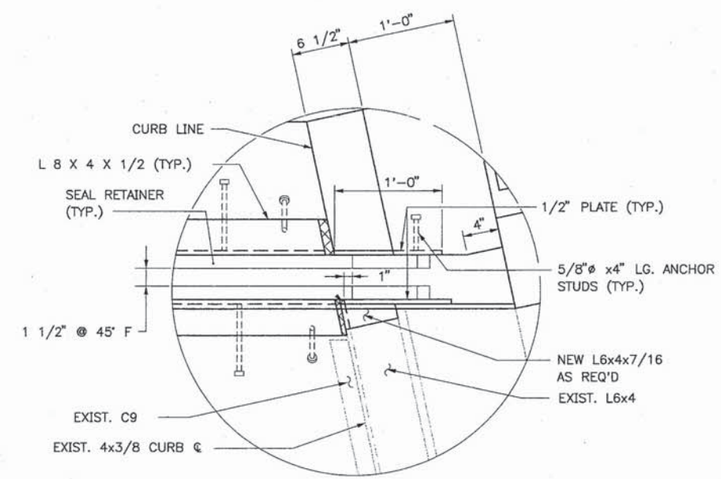

DETAIL E

1 1/2 " = 1'–0"

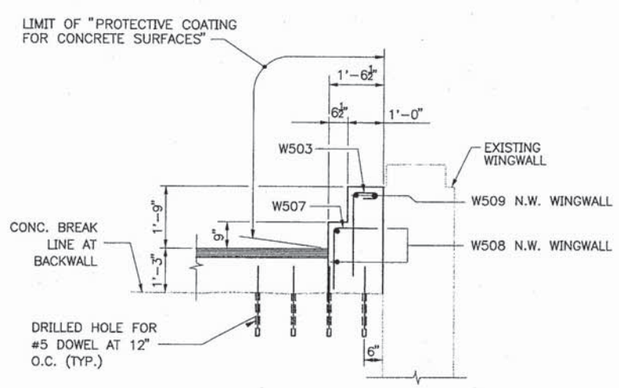

SECTION H–H

1/2"=1'–0"

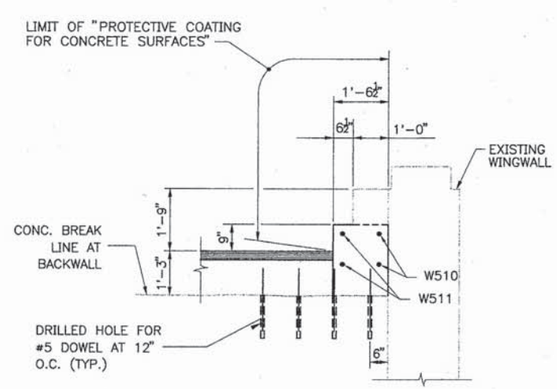

SECTION J–J

1/2"=1'–0"

NOTES

1. PROTECTIVE COATING FOR CONCRETE SURFACES SHALL BE SLX100 AND INCIDENTAL TO ITEM 502.261 STRUCTURAL CONCRETE, HIGH EARLY STRENGTH.

Scale:			
No.	Revision	By	Date

Designed by:

HNTB
ARCHITECTS ENGINEERS PLANNERS

	By	Date		By	Date
Designed	TRC	11/00	Checked	JRL	11/00
Drawn	TRC	11/00	In Charge of	RAL	11/00

HNTB CORPORATION
2 Thomas Drive
Westbrook, ME 04092
TEL (207) 774–5155
FAX (207) 772–7410

MAINE TURNPIKE AUTHORITY

MAINE TURNPIKE Trans pass

SOUTH PORTLAND INTERCHANGE BRIDGE
MISCELLANEOUS DETAILS

CONTRACT: 2000.19

SHEET NUMBER: 11 OF 12

MAINE TURNPIKE AUTHORITY

MAINE TURNPIKE

MAINE TURNPIKE Trans pass

JULIAN R. COLES, CHAIRMAN
DANIEL J. CALLAHAN, VICE CHAIRMAN
DEBORAH H.S. CIANCHETTE, MEMBER
PATRICK F. BUTLER, MEMBER
JOHN G. MELROSE, MEMBER EX-OFFICIO

PAUL E. VIOLETTE, EXECUTIVE DIRECTOR

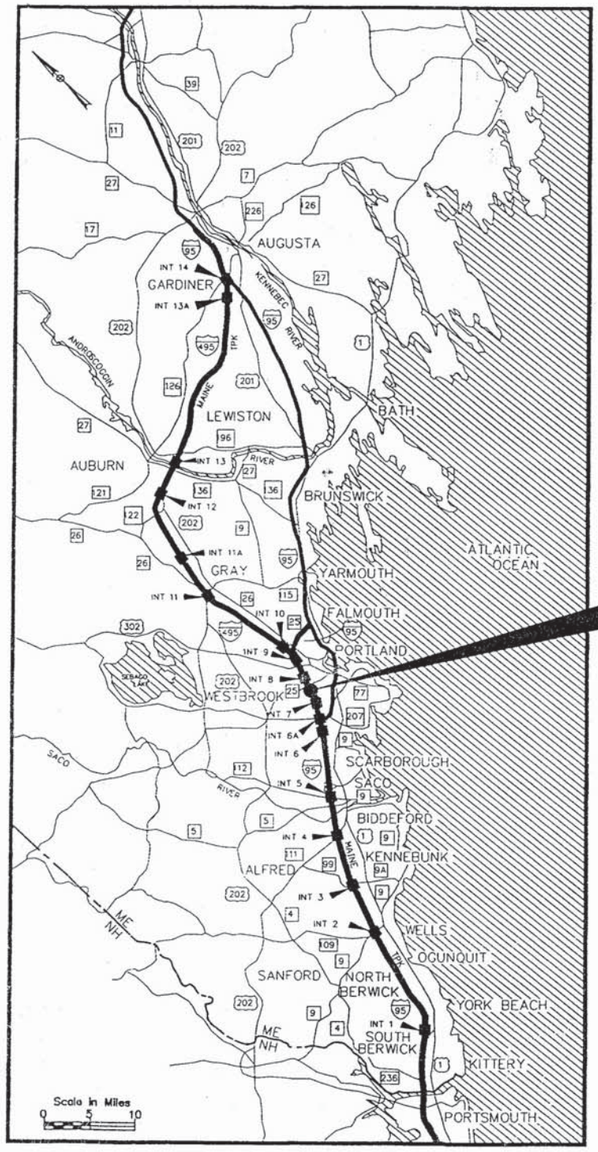

LOCATION MAP

CONTRACT 98.1
JETPORT INTERCHANGE
MM 44.25

VOLUME 2 OF 2

BRIDGE CONSTRUCTION

INDEX OF SHEETS

BRIDGE CONSTRUCTION – VOLUME 2 OF 2

1	TITLE SHEET
2	PLAN & ELEVATION
3	INDEX, QUANTITIES & GENERAL NOTES
4	BORING PLAN
5	BORING LOGS
6	BORING LOGS
7	BORING LOGS
8	BORING LOGS
9	FOUNDATION PLAN
10	ABUTMENTS – PLAN AND ELEVATION
11	ABUTMENT CONCRETE DIAPHRAGM
12	ABUTMENT DETAILS
13	PIERS – PLAN AND ELEVATION
14	PIERS CONCRETE DIAPHRAGM
15	FRAMING PLAN
16	BEAM ELEVATION AND SECTIONS SPAN 1 & SPAN 3
17	BEAM ELEVATION AND SECTIONS SPAN 2
18	BEAM DETAILS
19	DEFLECTIONS AND PAVEMENT ELEVATIONS
20	BEARING DETAILS
21	TYPICAL DECK SECTION
22	DECK PLAN
23	PARAPET DETAILS
24	ENDPOST DETAILS
25	ALUMINUM BRIDGE RAIL DETAILS
26	APPROACH SLAB DETAILS
27	MISCELLANEOUS DETAILS
28	REINFORCING STEEL SCHEDULE I
29	REINFORCING STEEL SCHEDULE II
30	REINFORCING STEEL SCHEDULE III
31	CONCRETE END POST
32	SUBSTRUCTURE DETAILS
33	SUPERSTRUCTURE DETAILS

STATE OF MAINE
DEPARTMENT OF TRANSPORTATION

COMMISSIONER _____ DATE _____

BUREAU DIRECTOR AND CHIEF ENGINEER _____ DATE _____

HNTB CORPORATION
ARCHITECTS ENGINEERS PLANNERS

ROLAND A. LAVALLEE P.E.
PROJECT DIRECTOR

DATE 2/12/98

APPROVED:
MAINE TURNPIKE AUTHORITY

CHAIRMAN _____ DATE _____

EXECUTIVE DIRECTOR _____ DATE _____

H:\435005\001\006JET\...n.001 11/12/97 16:20

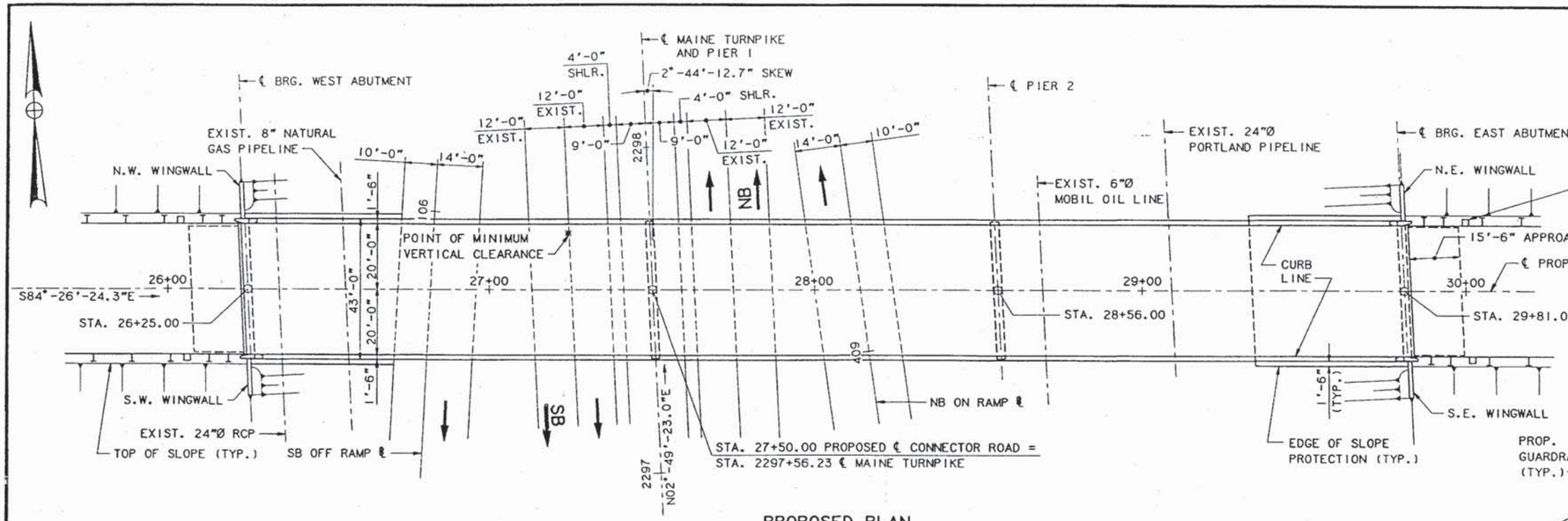

PROPOSED PLAN
1"=20'

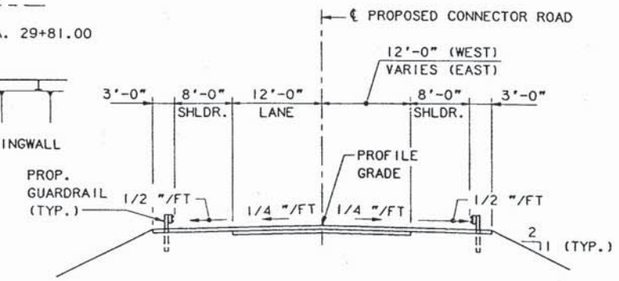

APPROACH SECTION - CONNECTOR ROAD
(LOOKING EAST)
1"=10'

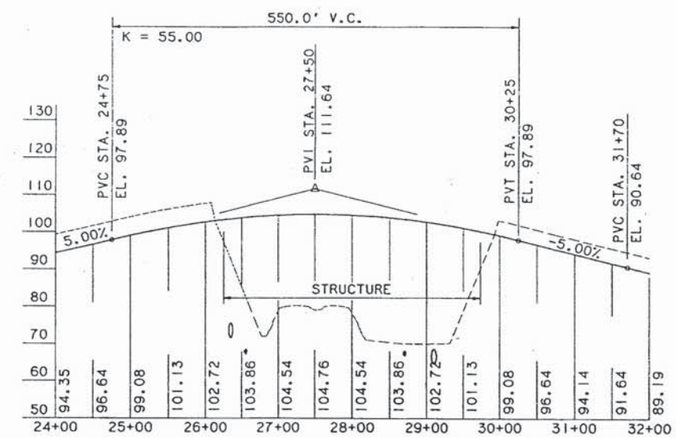

PROFILE
HOR. 1"=100'
VERT. 1"=20'

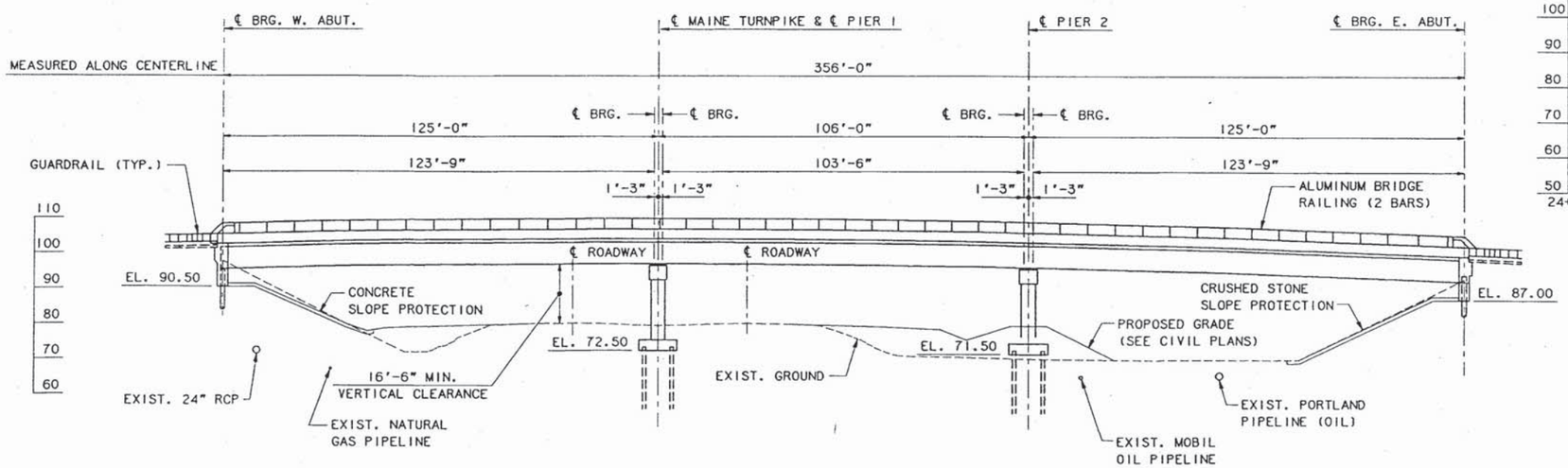

PROPOSED ELEVATION
1"=20'

					By:	Date:
				Designed	KAC	9/97
				Drawn	LS	9/97
				Checked	ESR	10/97
No.	Revision	By:	Date:	In charge of:	RAI	

Maine Turnpike Authority
Maine Turnpike

Trans pass

JETPORT INTERCHANGE

PLAN AND ELEVATION

HNTB
ARCHITECTS ENGINEERS PLANNERS

Contract 98.1

Sheet No. JI-1
2 of 33

GENERAL NOTES

SPECIFICATIONS

DESIGN

AASHTO STANDARD SPECIFICATIONS FOR HIGHWAY BRIDGES 16TH EDITION, 1996.

CONTRACT

STATE OF MAINE, DEPARTMENT OF TRANSPORTATION STANDARD SPECIFICATIONS, HIGHWAYS AND BRIDGES, REVISION OF APRIL 1995.

DESIGN LOADING

LIVE LOAD

HS 25, ALTERNATE MILITARY LOADING

DESIGN METHOD

LOAD FACTOR DESIGN

MATERIALS

CONCRETE

SUPERSTRUCTURE SLAB, DIAPHRAGMS, PARAPETS AND END POST CONCRETE SHALL BE CLASS AAA. ALL OTHER SUBSTRUCTURE AND SLOPE PROTECTION CONCRETE SHALL BE CLASS A. PRESTRESSED CONCRETE I-BEAM - CLASS P.

REINFORCING STEEL

AASHTO M31 GRADE 60, (EPOXY-COATED AND UNCOATED BARS).

PRESTRESSING STRAND

UNCOATED SEVEN-WIRE STRAND SHALL CONFORM TO THE REQUIREMENTS OF AASHTO M203 (ASTM A416, GRADE 270). SUPPLEMENT S1 LOW-RELAXING STRAND SHALL APPLY.

STRUCTURAL STEEL

STRUCTURAL STEEL SHALL BE AASHTO M270, GRADE 36 AND AASHTO M270, GRADE 50.

BASIC ALLOWABLE STRESSES

CONCRETE

f'_c = 6,500 P.S.I. (PRESTRESSED I-BEAM)

f'_c = 4,500 P.S.I. (SUPERSTRUCTURE SLAB, PARAPETS, DIAPHRAGMS AND END POSTS)

f'_c = 4,000 P.S.I. (ALL OTHER)

REINFORCING STEEL

f_y = 60,000 P.S.I.

PRESTRESSING STRAND

f'_s = 270,000 P.S.I.

STRUCTURAL STEEL

AASHTO M270 GRADE 36 F_y = 36,000 P.S.I.
AASHTO M270 GRADE 50 F_y = 50,000 P.S.I.

INDEX OF DRAWINGS

SHEET NO.	TITLE
JI-1	PLAN & ELEVATION
JI-2	INDEX, QUANTITIES & GENERAL NOTES
JI-3	BORING PLAN
JI-4	BORING LOGS
JI-5	BORING LOGS
JI-6	BORING LOGS
JI-7	BORING LOGS
JI-8	FOUNDATION PLAN
JI-9	ABUTMENTS - PLAN AND ELEVATION
JI-10	ABUTMENT CONCRETE DIAPHRAGM
JI-11	ABUTMENT DETAILS
JI-12	PIERS - PLAN AND ELEVATION
JI-13	PIER CONCRETE DIAPHRAGM
JI-14	FRAMING PLAN
JI-15	BEAM ELEVATION AND SECTIONS SPAN 1 & SPAN 3
JI-16	BEAM ELEVATION AND SECTIONS SPAN 2
JI-17	BEAM DETAILS
JI-18	DEFLECTIONS AND PAVEMENT ELEVATIONS
JI-19	BEARING DETAILS
JI-20	TYPICAL DECK SECTION
JI-21	DECK PLAN
JI-22	PARAPET DETAILS
JI-23	ENDPOST DETAILS
JI-24	ALUMINUM BRIDGE RAIL DETAILS
JI-25	APPROACH SLAB DETAILS
JI-26	MISCELLANEOUS DETAILS
JI-27	REINFORCING STEEL SCHEDULE I
JI-28	REINFORCING STEEL SCHEDULE II
JI-29	REINFORCING STEEL SCHEDULE III

STANDARD DETAIL SHEETS

SHEET NO.	TITLE
BD 201-93	CONCRETE END POST
BD 501-93	SUBSTRUCTURE DETAILS
BD 521-93	SUPERSTRUCTURE DETAILS

ITEM	DESCRIPTION	UNIT	QUANTITY
203.20	COMMON EXCAVATION	C.Y.	135
203.25	GRANULAR BORROW	C.Y.	485
206.082	STRUCTURAL EARTH EXCAVATION - MAJOR STRUCTURES	C.Y.	610
206.10	STRUCTURAL EARTH EXCAVATION - PIERS	C.Y.	144
304.10	AGGREGATE SUBBASE COURSE-GRAVEL	C.Y.	204
403.13	DENSE GRADED BITUMINOUS PAVEMENT FOR BRIDGES	TON	293
501.231	DYNAMIC LOADING TEST	EA.	4
501.253	BITUMEN PILE COATING	S.Y.	565
501.50	STEEL H-BEAM PILES 89 LBS/FT, DELIVERED	L.F.	1425
501.501	STEEL H-BEAM PILES 89 LBS/FT, IN PLACE	L.F.	1425
501.54	STEEL H-BEAM PILES 117 LBS/FT, DELIVERED	L.F.	810
501.541	STEEL H-BEAM PILES 117 LBS/FT, IN PLACE	L.F.	810
501.90	PILE TIPS	EA.	42
501.91	PILE SPLICES	EA.	4
501.93	AUGERED PILE SHAFTS, CASINGS AND BACKFILL	EA.	12
502.21	STRUCTURAL CONCRETE, ABUTMENTS AND RETAINING WALLS	C.Y.	86
502.23	STRUCTURAL CONCRETE PIERS	C.Y.	194
502.262	STRUCTURAL CONCRETE ROADWAYS, PARAPETS & DIAPHRAGMS	L.S.	1
502.31	STRUCTURAL CONCRETE APPROACH SLAB	L.S.	1
503.12	REINFORCING STEEL, FABRICATED AND DELIVERED	LB.	30,300
503.13	REINFORCING STEEL, PLACING	LB.	30,300
503.14	EPOXY-COATED REINFORCING STEEL, FABRICATED AND DELIVERED	LB.	198,100
503.15	EPOXY-COATED REINFORCING STEEL, PLACING	LB.	198,100
507.0922	ALUMINUM BRIDGE RAILING, 2 BAR	L.S.	1
508.13	MEMBRANE WATERPROOFING	L.S.	1
511.091	TEMPORARY EARTH SUPPORT SYSTEM - BRIDGE *	L.S.	1
513.09	SLOPE PROTECTION - PORTLAND CEMENT CONCRETE	S.Y.	224
513.22	CRUSHED STONE SLOPE PROTECTION	S.Y.	261
514.06	CURING BOX FOR CONCRETE CYLINDERS	EA.	1
515.202	CLEAR PROTECTIVE COATING FOR CONCRETE SURFACE	S.Y.	1004
520.23	ASPHALTIC PLUG JOINT	L.F.	80
523.31	ELASTOMERIC BEARING ASSEMBLY	EA.	24
524.40	PROTECTIVE SHIELD - PRECAST PRESTRESSED CONCRETE I GIRDERS	S.Y.	550
535.61	PRESTRESSED STRUCTURAL CONCRETE I-GIRDERS	L.S.	1
609.15	SLOPED CURB TYPE I	L.F.	712

* UNDETERMINED LOCATION

	By:	Date:
Designed	KAC	9/97
Drawn	LS	9/97
Checked	ESR	9/97

Maine Turnpike Authority
Maine Turnpike

Trans pass

JETPORT INTERCHANGE

INDEX, QUANTITIES & GENERAL NOTES

HNTB
ARCHITECTS ENGINEERS PLANNERS

Contract 98.1

Sheet No. JI-2
3 of 33

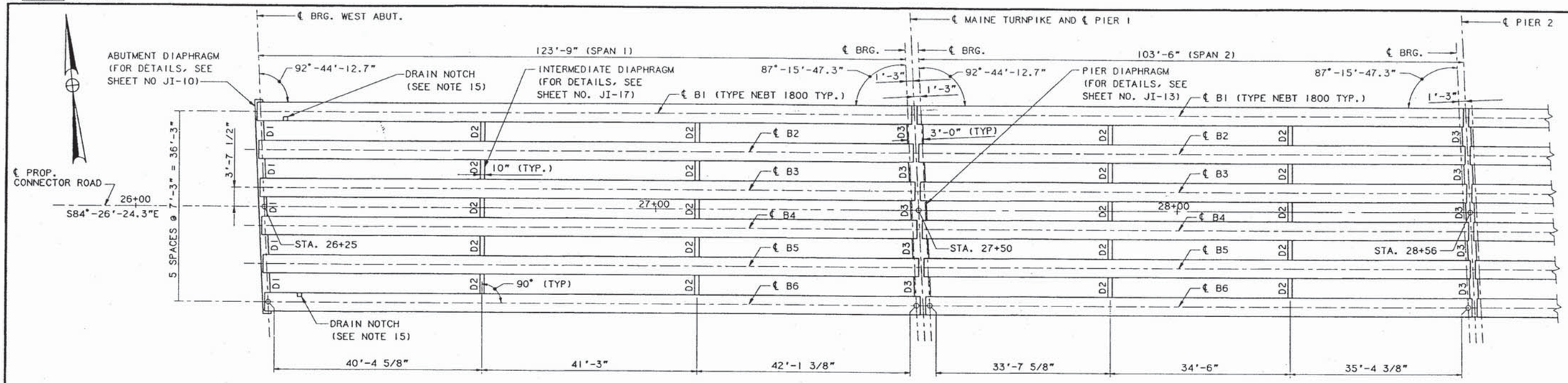

FRAMING PLAN
1"=10'

PRESTRESSED CONCRETE BEAM NOTES

1. THE FABRICATION OF PRESTRESSED CONCRETE BEAMS SHALL BE IN ACCORDANCE WITH SECTION 535, OF THE STANDARD SPECIFICATIONS AND SPECIAL PROVISIONS SECTION 502.
2. LIFTING DEVICES ARE THE RESPONSIBILITY OF THE PRECASTER.
3. THE CONCRETE SHALL HAVE A MINIMUM 28-DAY COMPRESSIVE STRENGTH OF 6,500 PSI. (CLASS P) THE MINIMUM REQUIRED COMPRESSIVE STRENGTH AT STRESS TRANSFER SHALL NOT BE LESS THAN 4,880 PSI.
4. ALL EXPOSED CORNERS SHALL BE CHAMFERED 3/4-INCH.
5. ALL STRUCTURAL MEMBERS DAMAGED DURING FABRICATION, SHIPPING OR ERECTION, SUCH THAT THEIR STRUCTURAL INTEGRITY IS COMPROMISED, SHALL BE REJECTED AND REPLACED AT THE CONTRACTOR'S OWN EXPENSE. THE ENGINEER SHALL BE THE SOLE JUDGE IN DETERMINING THE STRUCTURAL INTEGRITY OF DAMAGED PRESTRESSED MEMBERS.
6. DURING FABRICATION, STORAGE AND HANDLING, THE BEAMS MUST BE MAINTAINED IN AN UPRIGHT POSITION AT ALL TIMES AND MUST BE PICKED UP BY MEANS OF LIFTING DEVICES AT THEIR APPROVED SUPPORT POINTS. LIFTING INSERTS SHALL HAVE A MINIMUM SAFETY FACTOR OF 4.
7. THE DETAILS OF ALL INSERTS, ANCHORS, AND ANY OTHER ITEMS REQUIRED TO BE CAST INTO THE PRECAST PRESTRESSED UNITS (WHETHER DETAILED ON THE CONTRACT DRAWINGS OR PROVIDED FOR THE CONTRACTOR'S CONVENIENCE) SHALL BE SHOWN ON THE SHOP DRAWINGS. ALL HARDWARE SHALL BE GALVANIZED.
8. THE THREADED INSERTS ARE REQUIRED TO DEVELOP A MINIMUM PULLING STRENGTH OF 24 KIPS FOR NO. 8 BAR.
9. REINFORCING STEEL, SLEEVES, THREADED INSERTS AND STEEL STRANDS USED IN THE PRESTRESSED BEAMS SHALL BE PAID FOR UNDER ITEM 535.61 PRESTRESSED STRUCTURAL CONCRETE I-GIRDERS.
10. THE SHOP DRAWINGS SHALL INDICATE THE PROCEDURES AND SEQUENCE OF OPERATION TO BE FOLLOWED IN CASTING THE BEAMS.
11. THE BEAM HANDLING AND ERECTION SCHEME SHALL BE SUBMITTED TO THE ENGINEER FOR APPROVAL PRIOR TO HANDLING OF THE BEAMS. ERECTION PLAN SHALL BE STAMPED BY MAINE P.E.
12. THE TOP SURFACE OF THE UPPER FLANGE OF THE PRECAST BEAMS SHALL BE RAKED TO A SURFACE ROUGHNESS OF ± 1/4" EXCEPT AT LOCATIONS CORRESPONDING TO THE BLOCKING POINTS. AT THESE LOCATIONS A FLATTENED AREA OF SUFFICIENT SIZE SHALL BE LEFT TO FACILITATE TAKING ELEVATIONS FOR SETTING BOTTOM OF SLAB ELEVATIONS.
13. THE DRILLING OF HOLES IN THE PRESTRESSED BEAMS AND THE USE OF POWDER ACTUATED TOOLS ON THE BEAMS WILL NOT BE PERMITTED.
14. TEMPORARY BRACING SHALL BE PROVIDED TO STABILIZE BEAMS UNTIL DIAPHRAGMS ARE IN PLACE. (SEE NOTE 11)
15. DRAIN NOTCHES ARE TO BE LOCATED ALONG THE EXTERIOR FLANGE OF THE EXTERIOR BEAMS ONLY AT THE ABUTMENTS. THIS WORK SHALL BE CONSIDERED INCIDENTAL TO THE BEAMS. FOR LOCATION OF DRAINS, SEE SCHEDULE ON SHT. NO. JI-20. FOR NOTCH DETAIL, SEE SHT. NO. JI-15.
16. CLASS P CONCRETE SHALL CONTAIN 3 GALLONS OF CALCIUM NITRITE CORROSION INHIBITOR ADMIXTURE PER CUBIC YARD OF CONCRETE. SEE SPECIFICATION SECTION 502 (USE OF CALCIUM NITRITE ADMIXTURE).
17. ENGINEER SHALL BE NOTIFIED THREE WEEKS PRIOR TO BEAM FABRICATION. BEAM FABRICATION SHALL NOT START WITHOUT APPROVED SHOP DRAWINGS AND APPROVED CONCRETE MIX DESIGN.

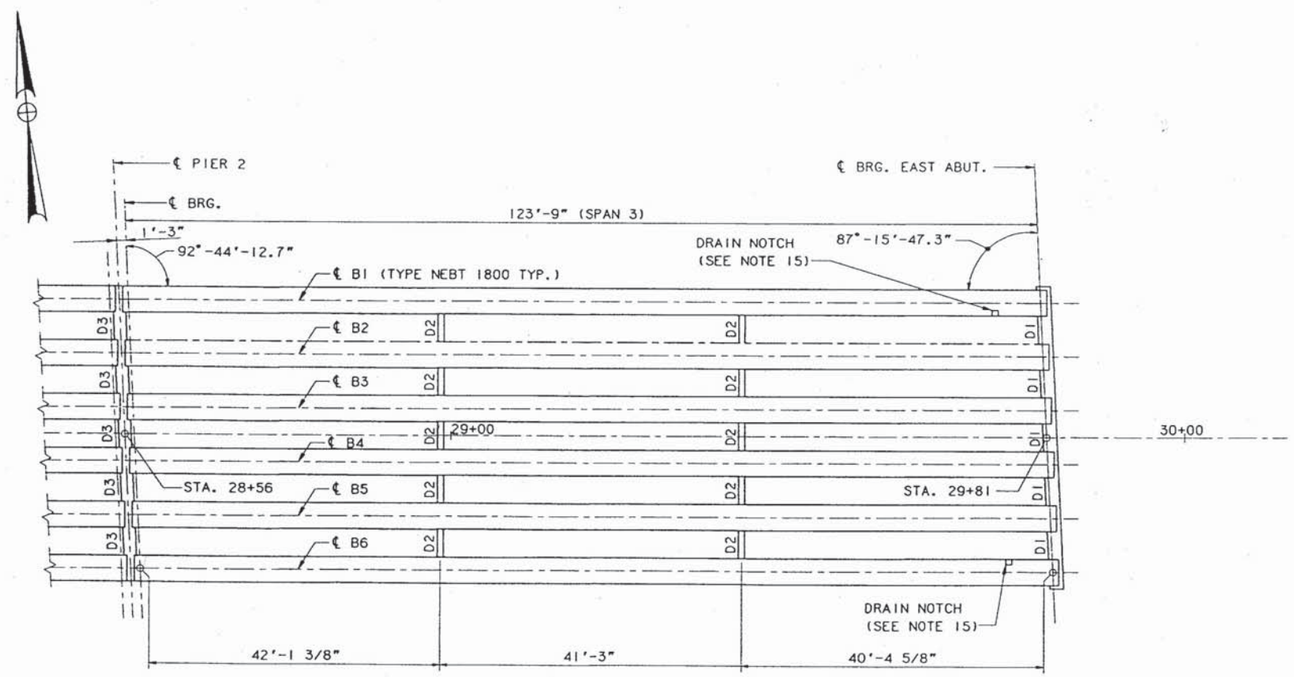

FRAMING PLAN
1"=10'

					By:	Date:
				Designed	KAC	9/97
				Drawn	LS	9/97
				Checked	ESR	10/97

Maine Turnpike Authority
Maine Turnpike

Trans pass

JETPORT INTERCHANGE

FRAMING PLAN

HNTB
ARCHITECTS ENGINEERS PLANNERS

Contract 98.1

Sheet No. JI-14
15 of 33

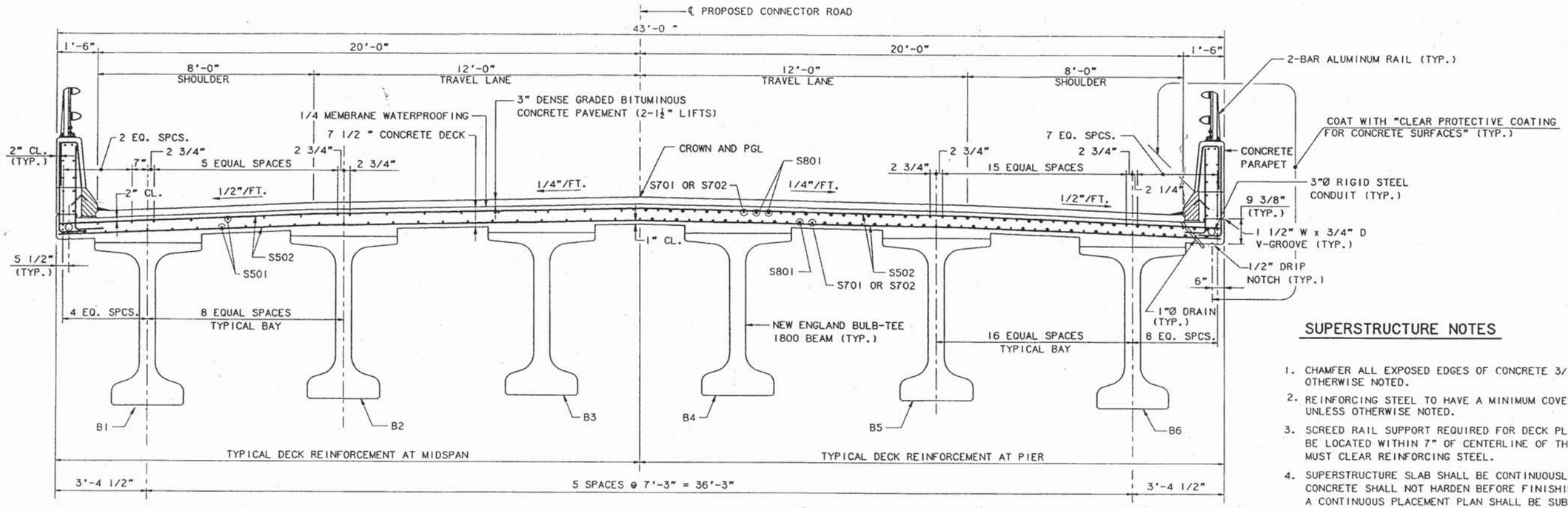

TYPICAL SECTION

1/2"=1'-0"

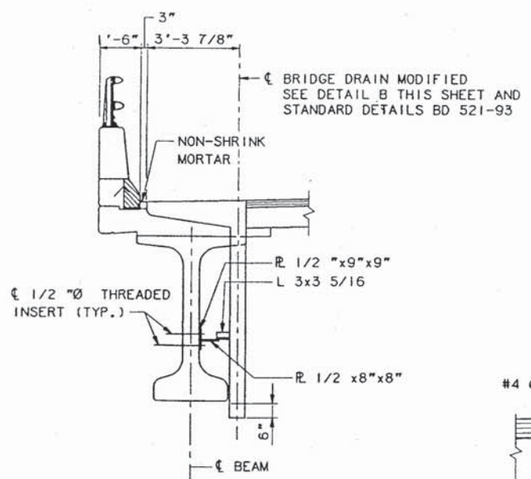

STANDARD BRIDGE DRAIN MODIFIED (SDBM)

3/8"=1'-0"

BRIDGE DRAIN SCHEDULE	
LOCATION	OFFSET
STA. 26+30	16.43' LT.
STA. 26+32	16.43' RT.
STA. 29+74	16.43' LT.
STA. 29+76	16.43' RT.

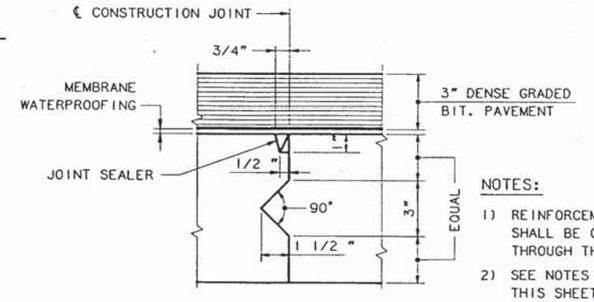

NOTES:

1) REINFORCEMENT NOT SHOWN SHALL BE CONTINUOUS THROUGH THE JOINT
2) SEE NOTES 4 & 12, THIS SHEET.

TRANSVERSE CONSTRUCTION JOINT DETAIL

3"=1'-0"

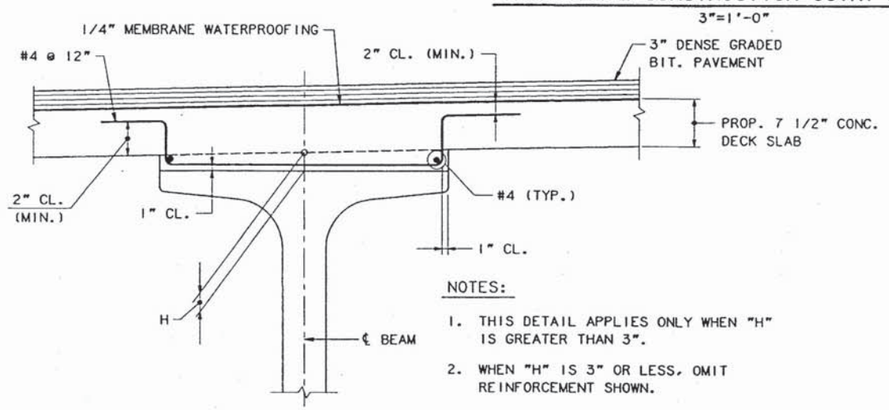

NOTES:

1. THIS DETAIL APPLIES ONLY WHEN "H" IS GREATER THAN 3".
2. WHEN "H" IS 3" OR LESS, OMIT REINFORCEMENT SHOWN.

EXTRA DEPTH HAUNCH DETAIL

1" = 1'-0"

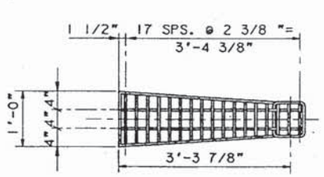

DETAIL B

3/4"=1'-0"

SUPERSTRUCTURE NOTES

1. CHAMFER ALL EXPOSED EDGES OF CONCRETE 3/4", UNLESS OTHERWISE NOTED.
2. REINFORCING STEEL TO HAVE A MINIMUM COVER OF 2", UNLESS OTHERWISE NOTED.
3. SCREED RAIL SUPPORT REQUIRED FOR DECK PLACEMENT SHALL BE LOCATED WITHIN 7" OF CENTERLINE OF THE BEAM. SUPPORT MUST CLEAR REINFORCING STEEL.
4. SUPERSTRUCTURE SLAB SHALL BE CONTINUOUSLY CAST IN PLACE. CONCRETE SHALL NOT HARDEN BEFORE FINISHING OF EACH SPAN. A CONTINUOUS PLACEMENT PLAN SHALL BE SUBMITTED TO THE ENGINEER FOR APPROVAL.
5. ADJUST REINFORCING STEEL TO FIT AROUND THE BRIDGE DRAINS IN A MANNER APPROVED BY THE ENGINEER. DO NOT CUT TRANSVERSE REINFORCING STEEL.
6. CLEAR PROTECTIVE COATING FOR CONCRETE SURFACES SHALL BE USED AT THE FOLLOWING AREAS: PARAPET SURFACES, FASCIA DOWN TO DRIP NOTCH AND ALL EXPOSED CONCRETE CONCRETE SURFACES ON THE END POSTS.
7. FOR 1"Ø DRAIN LOCATIONS, SEE SHEET NO. JI-21. DO NOT COVER DECK DRAINS WITH MEMBRANE WATERPROOFING. DEPRESS DRAINS 1/2" BELOW TOP OF SLAB, PROVIDE 23 GAUGE GALVANIZED SCREENS (1/4" MESH) OVER DRAINS.
8. FOR 2-BAR ALUMINUM BRIDGE RAIL DETAILS, SEE SHEET NO. JI-24.
9. FOR STEEL REINFORCEMENT SCHEDULE SEE SHEET NO. JI-28.
10. FOR PARAPET DETAILS, SEE SHEET NO. JI-22.
11. FOR CURB TRANSITION AND SLAB DETAILS AT END POSTS, SEE SHEET NO. JI-23.
12. POUR CONCRETE FOR DECK SLAB AT ABUTMENT DIAPHRAGM AFTER SUPERSTRUCTURE DECK SLAB IS IN PLACE.
13. ALL STEEL PLATES AND ANGLES FOR SUPPORT OF BRIDGE DRAIN SHALL BE M270 GRADE 36 GALVANIZED.
14. PAYMENT FOR BRIDGE DRAINS, PVC DRAINS AND SCREENS SHALL BE INCIDENTAL TO ITEM 502.262
15. STAY IN PLACE FORM ARE NOT ALLOWED TO BE USED.

No.	Revision	By:	Date:		By:	Date:
				Designed	KAC	9/97
				Drawn	LS	9/97
				Checked	ESR	10/97
				In charge of: RAL		

Maine Turnpike Authority
Maine Turnpike

Trans pass

JETPORT INTERCHANGE

TYPICAL DECK SECTION

HNTB
ARCHITECTS ENGINEERS PLANNERS

Contract 98.1

Sheet No. JI-20
21 of 33

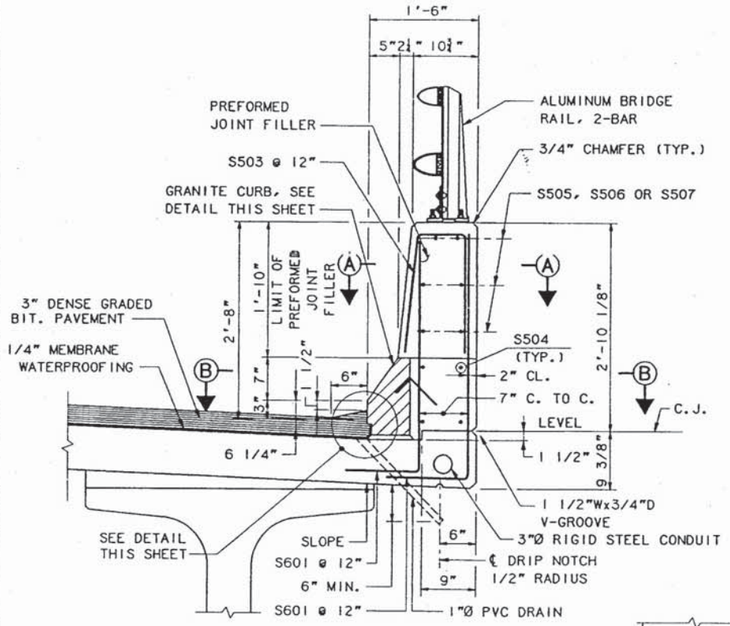

PARAPET DETAIL
1"=1'-0"

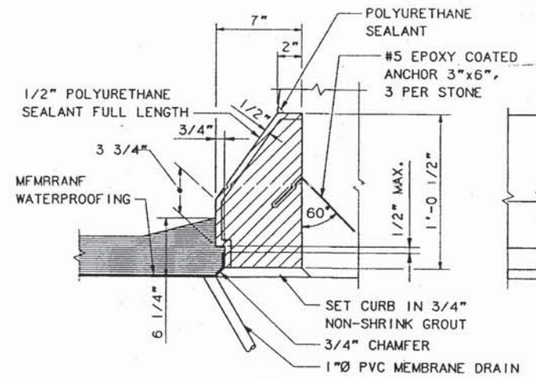

GRANITE CURB DETAIL
1" = 6"

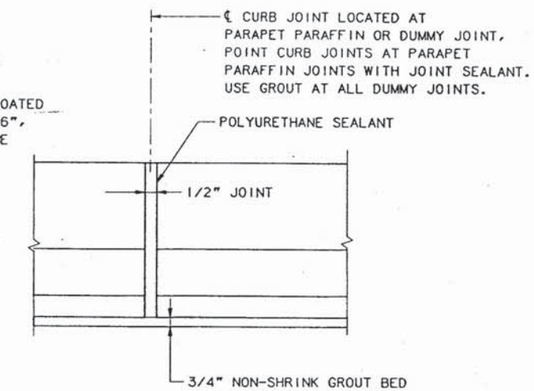

BRIDGE CURB ELEVATION
1" = 6"

PARAFFIN AND DUMMY JOINT NOTES

1. CONCRETE SHALL BE PLACED SIMULTANEOUSLY ON BOTH SIDES OF JOINT.
2. PREFORMED JOINT FILLER SHALL BE CONFORMED TO ASTM DESIGNATION D1751 AND MAY BE SUPPORTED WITH A THIN STEEL PLATE. REMOVE PLATE CAREFULLY WHILE THE CONCRETE IS PLASTIC.
3. SECTION B-B APPLIES TO PARAFFIN AND DUMMY JOINT LOCATIONS.
4. JOINT SEALER SHALL BE SIKA FLEX 1A.
5. PREFORMED JOINT FILLER AND JOINT SEALER SHALL BE INCIDENTAL TO ITEM 502.261, STRUCTURAL CONCRETE ROADWAY, PARAPET & DIAPHRAGM.
6. CURB JOINTS SHALL BE ALIGNED WITH PARAFFIN AND DUMMY JOINTS.

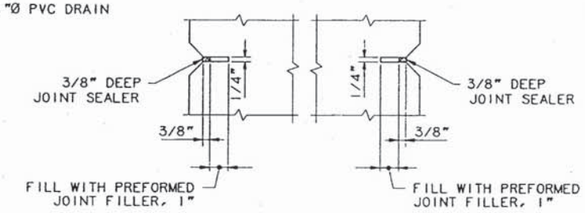

SECTION A-A
(DUMMY JOINT)
3"=1'-0"

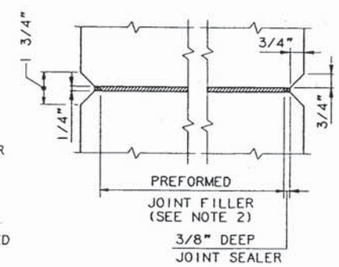

SECTION A-A
(PARAFFIN JOINT)
3"=1'-0"

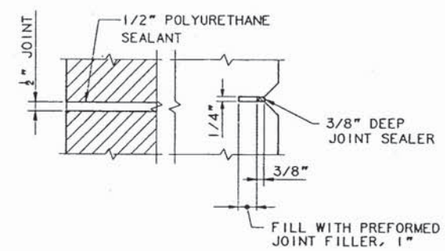

SECTION B-B
3"=1'-0"

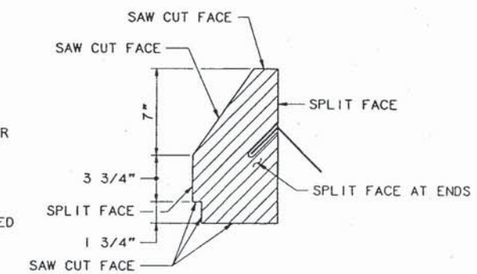

GRANITE CURB CUT DETAIL
1" = 6"

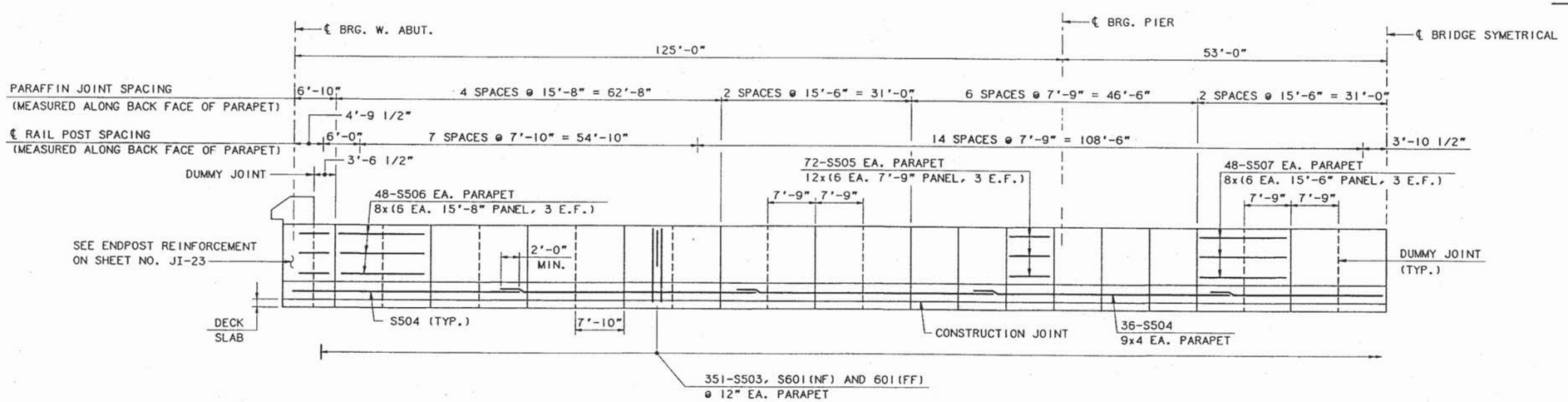

PARAPET ELEVATION
(NORTH FASCIA SHOWN, SOUTH FASCIA SIMILAR)
HORIZ. 1" = 10'
VERT. 1" = 2'

No.	Revision	By:	Date:		By:	Date:
				Designed	KAC	9/97
				Drawn	LS	9/97
				Checked	ESR	10/97
				In charge of:	RAL	

Maine Turnpike Authority
Maine Turnpike

Trans pass

JETPORT INTERCHANGE

PARAPET DETAILS

HNTB
ARCHITECTS ENGINEERS PLANNERS

Contract 98.1

Sheet No. JI-22
23 of 33

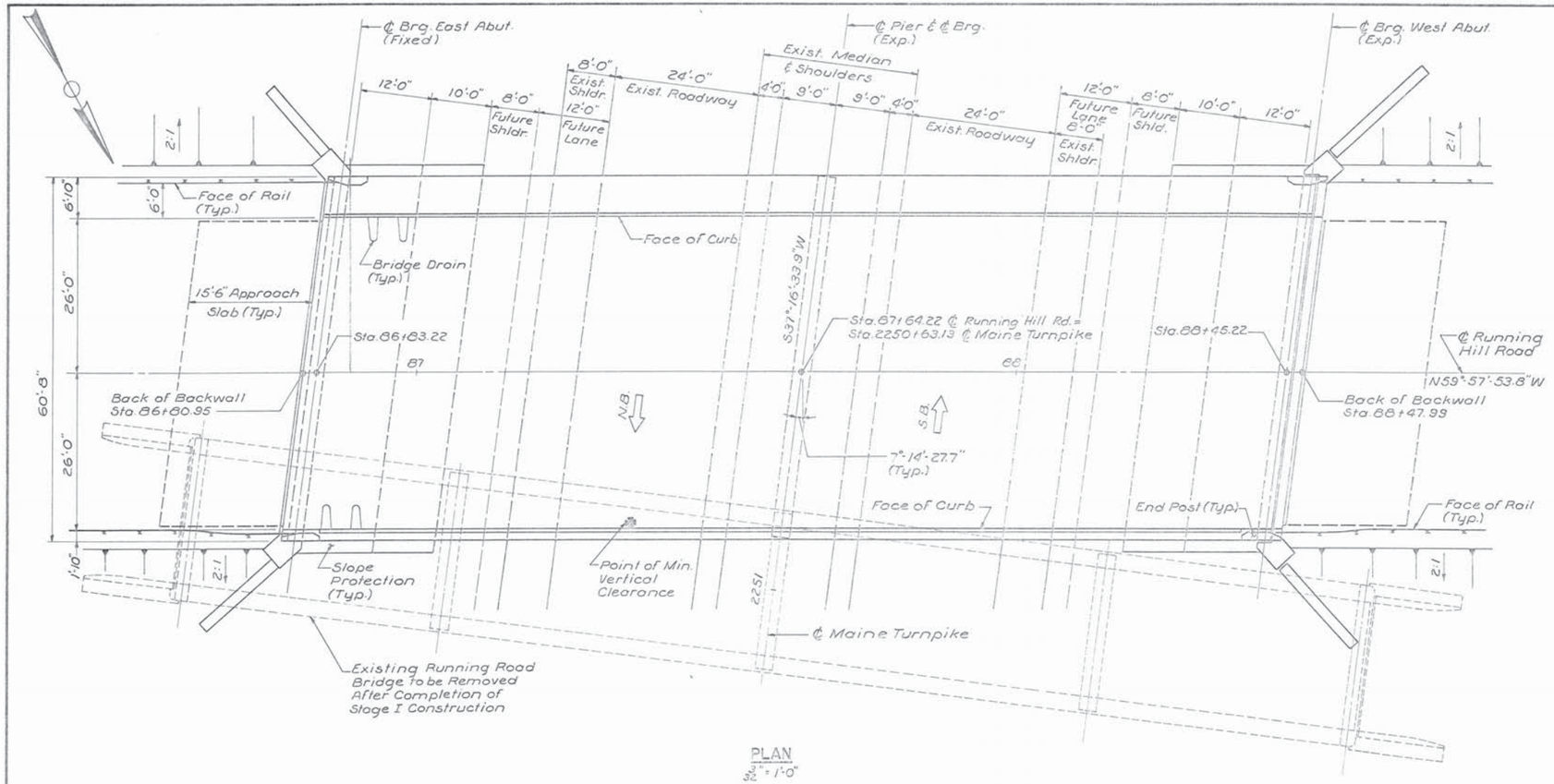

PLAN
3/32" = 1'-0"

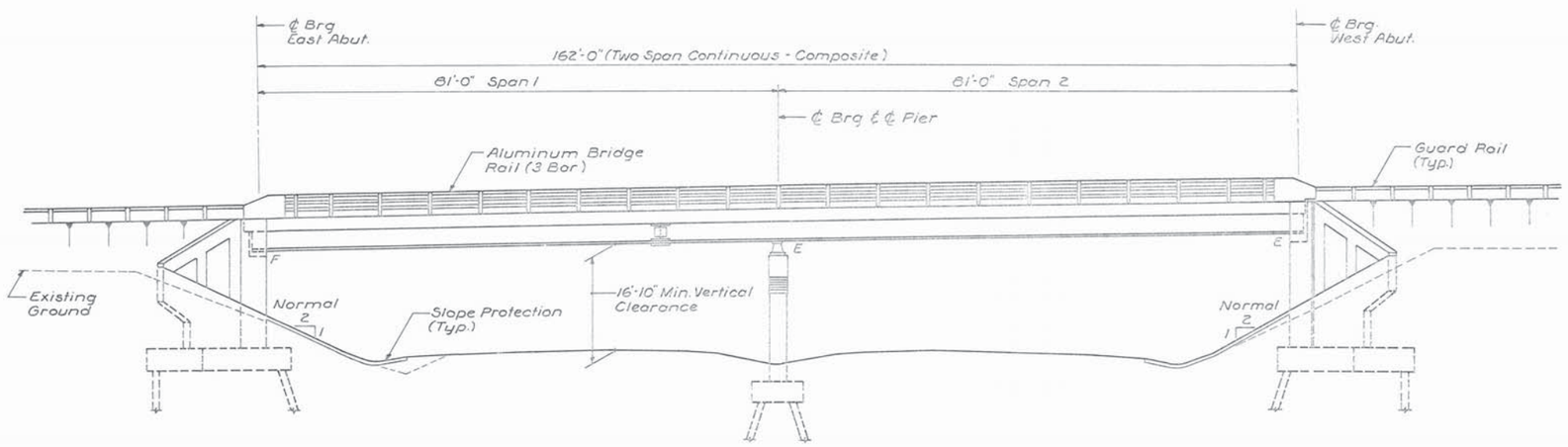

ELEVATION
3/32" = 1'-0"

NO.	REVISION	BY	DATE		BY	DATE
				DESIGNED:	K.A.C.	6-87
				DRAWN:	R.D.F.	6-87
				CHECKED:	A.B.S.	7-87
				IN CHARGE OF J.P.W.		

INDEX OF SHEETS

1. General Plan & Elevation
2. Typical Cross Sections
3. Profiles & Contour Plan
4. Boring Details
5. Footing Plan
6. East Abutment
7. West Abutment
8. Abutment & Wingwall Details I
9. Abutment & Wingwall Details II
10. Pier
11. Framing Plan & Details
12. Structural Steel Details
13. Superstructure Details I
14. Superstructure Details II
15. Utility Details
16. Slope Protection
17. Reinforcing Steel Schedule
18. Reinforcing Steel Schedule

STANDARD SHEETS

Bearing Pedestals	BD101-86
Beam Splices	BD103-81
Diaphragm & Crossframes	BD113-85
Aluminum Bridge Railing	BD115-81
Concrete End Post	BD120-81
Expansion Device	BD125-82
Miscellaneous Details	BD126-81, BD127-81

DESIGN

Load Factor Design Per AASHTO. Standard Specifications for Highway Bridges 1983 And Interim Specifications 1984, 1985 & 1986.

CONTRACT

State of Maine, Department of Transportation, Standard Specifications Highways & Bridges, Revision of January 1984.

DESIGN LOADING

LIVE LOAD

HS 25 500,000 Cycles

MATERIALS

CONCRETE

All Concrete Shall Be Class A

REINFORCING STEEL

ASTM A615 Grade 60

STRUCTURAL STEEL

Rolled Beams ASTM A572 Grade 50
High Strength Bolts - ASTM A325
All Others - ASTM A36

BASIC ALLOWABLE STRESSES

REINFORCING STEEL

$f_y = 60{,}000$ p.s.i.

STRUCTURAL STEEL

ASTM A572 $f_y = 50{,}000$ p.s.i.
ASTM A36 $f_y = 36{,}000$ p.s.i.
ASTM A325 $f_y = 25{,}000$ p.s.i.

CONCRETE

$f'_c = 4{,}200$ p.s.i. $n = 9$

MAINE TURNPIKE AUTHORITY
MAINE TURNPIKE

RUNNING HILL ROAD
GENERAL PLAN & ELEVATION

HOWARD, NEEDLES, TAMMEN & BERGENDOFF
ARCHITECTS ENGINEERS PLANNERS
BOSTON

SCALE: AS NOTED
SHEET NO. 1

13

BRIDGE QUANTITIES

ITEM NO.	DESCRIPTION	QUANTITY	UNIT
202.19	Removing Existing Bridge	1	L.S.
203.25	Granular Borrow	1,400	C.Y.
203.26	Gravel Borrow	330	C.Y.
206.081	Structural Earth Excavation - Abutments & Retaining Walls	850	C.Y.
206.10	Structural Earth Excavation - Piers	140	C.Y.
403.08	Hot Bituminous Pavement Grading C	172	Ton
501.214	Steel H-Beam Piles, 53 Lbs/Ft.	3,300	L.F.
502.21	Structural Concrete, Abutments & Retaining Walls	760	C.Y.
502.23	Structural Concrete, Piers	148	C.Y.
502.26	Structural Conc. Roadway & Sidewalk Slabs On Steel Bridges (343 C.Y.)	1	L.S.
502.31	Structural Concrete, Approach Slab (40 C.Y.)	1	L.S.
503.12	Reinforcing Steel, Fabricated & Delivered	59,000	Lb's
503.13	Reinforcing Steel, Placing	59,000	Lb's
503.14	Reinforcing Steel, Fabricated & Delivered (Epoxy-Coated)	104,000	Lb's
503.15	Reinforcing Steel, Placing (Epoxy-Coated)	104,000	Lb's
504.70	Structural Steel, Fabricated & Delivered (22,300 Lb's A36; 218,600 Lb's A572)	1	L.S.
504.71	Structural Steel, Erection (22,300 Lb's A36, 218,600 Lb's A572)	1	L.S.
505.08	Shear Connectors (3296 Units)	1	L.S.
506.141	Field Painting New Structural Steel (121 Ton)	1	L.S.
507.093	Aluminum Bridge Railing, 3 Bar	312	L.F.
508.10	Membrane Waterproofing	915	S.Y.
511.07	Cofferdam	1	L.S.
512.08	French Drains	195	L.F.
513.09	Slope Protection - Portland Cement Concrete	350	S.Y.
514.06	Curing Box For Concrete Cylinders	1	Each
515.20	Protective Coating For Concrete Surfaces	260	S.Y.
520.20	Expansion Devices (62 L.F.)	1	L.S.
609.132	Vertical Bridge Curb - Type 1B	320	L.F.
634.20	4" Conduit	840	L.F.

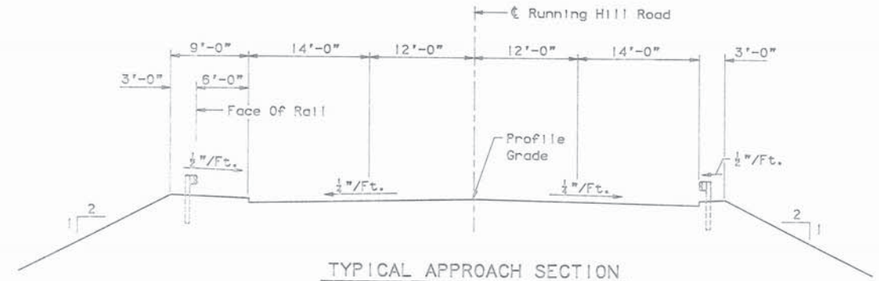

TYPICAL APPROACH SECTION
1/8" = 1'-0"

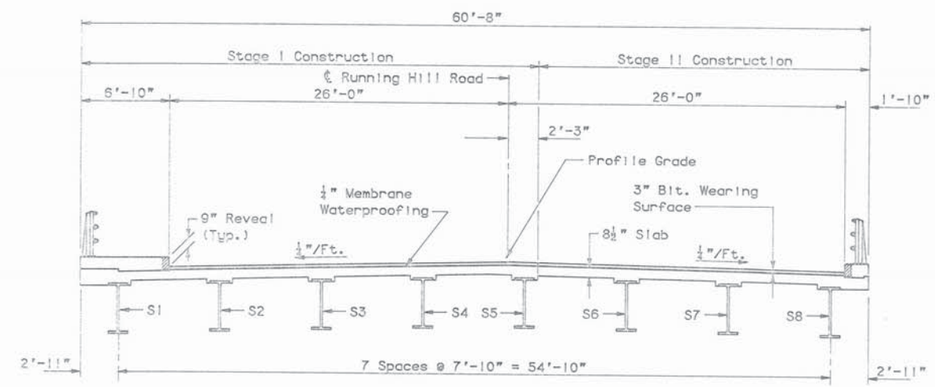

TYPICAL DECK SECTION
1/16" = 1'-0"

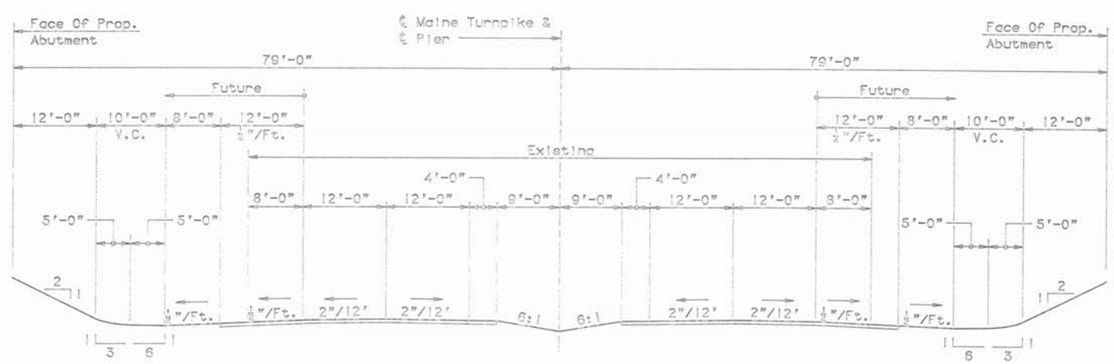

CROSS SECTION - MAINE TURNPIKE
1"=10'

NO.	REVISION	BY	DATE

	BY	DATE
DESIGNED:	KAC	7/87
DRAWN:	EID	7/87
CHECKED:	KAC	7/87
IN CHARGE OF	JPW	

MAINE TURNPIKE AUTHORITY
MAINE TURNPIKE

RUNNING HILL ROAD
TYPICAL CROSS SECTIONS

HOWARD, NEEDLES, TAMMEN & BERGENDOFF
ARCHITECTS ENGINEERS PLANNERS
BOSTON

SCALE: AS NOTED
SHEET NO. 2

14

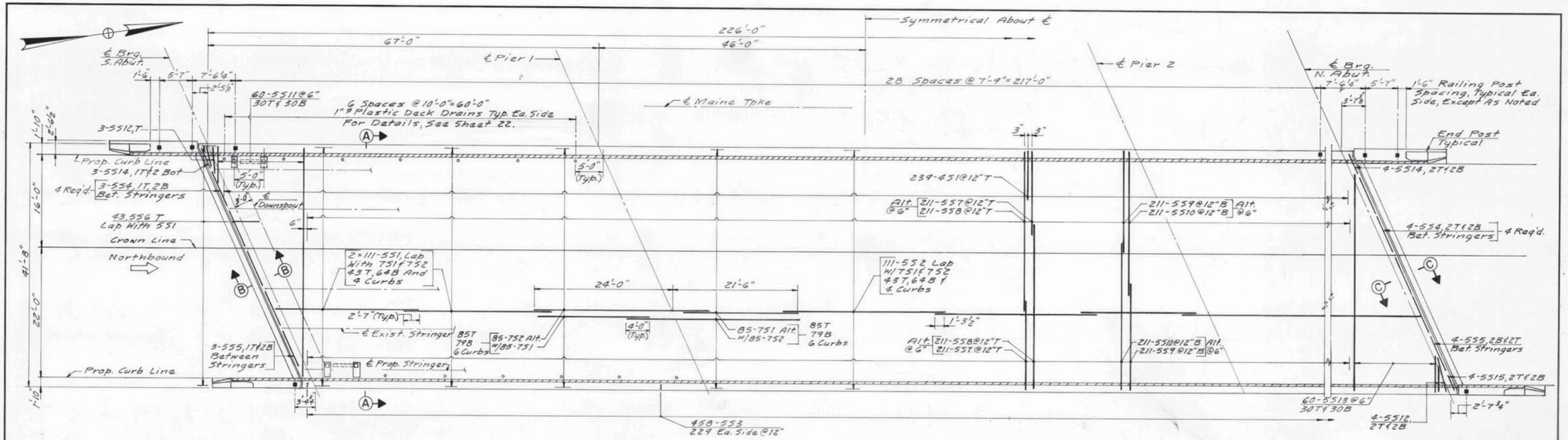

PARTIAL DECK PLAN

(NB Shown, SB Similar)
⅛" = 1'-0"

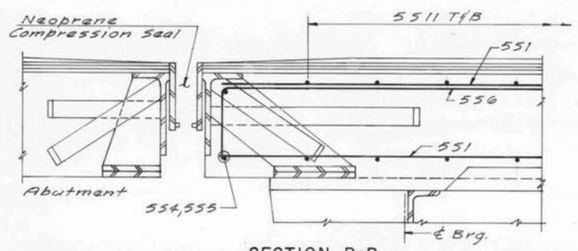

SECTION B-B

2" = 1'-0"

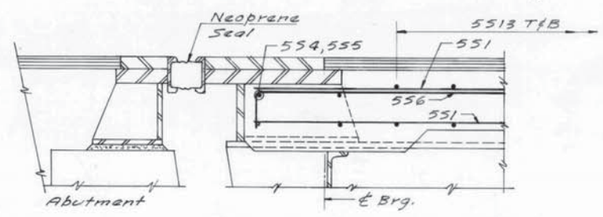

SECTION C-C

½" = 1'-0"

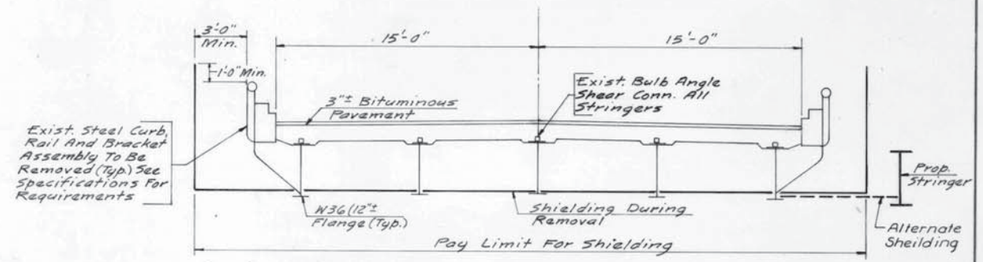

EXISTING DECK REMOVAL

No Scale

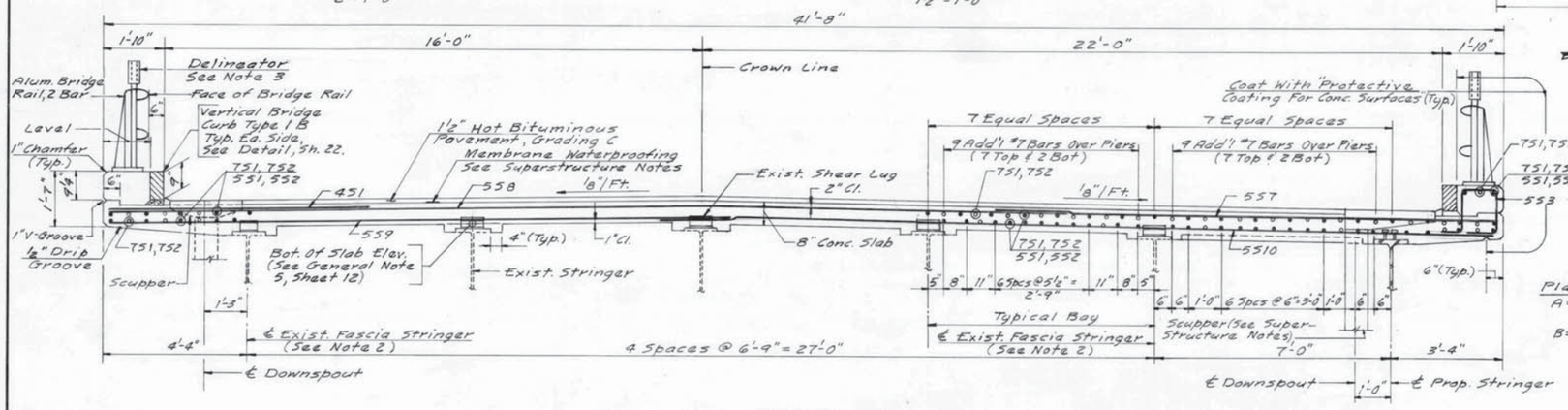

SECTION A-A

½" = 1'-0"

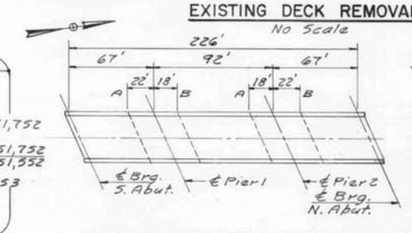

DECK PLACEMENT DETAILS

No Scale

Placement Notes

A = Termination Points When Placement Starts At South Abutment.

B = Termination Points When Placement Starts At North Abutment.

NOTES

1. For Superstructure Notes, See Sheet 12.
2. For Modifications To Existing Fascia Stringers, See Sheet 20.
3. Delineators Shall Not Exceed A 60 Foot Spacing On The Bridge. Delineators Shall Be A White Reflective Sheeting Type II Placed On Both Sides Of The Bridge. (Highway Item)

No.	Revision	By:	Date:		By:	Date:
				Designed	R.J.R.	11-91
				Drawn	C.S.L.	11-91
				Checked	R.A.L.	12-91
				In charge of: R.A.L.		

Maine Turnpike Authority
Maine Turnpike

WARREN AVENUE
SUPERSTRUCTURE DETAILS

HNTB — HOWARD NEEDLES TAMMEN & BERGENDOFF ARCHITECTS ENGINEERS PLANNERS

Contract 92.10

Sheet No. 21 of 32

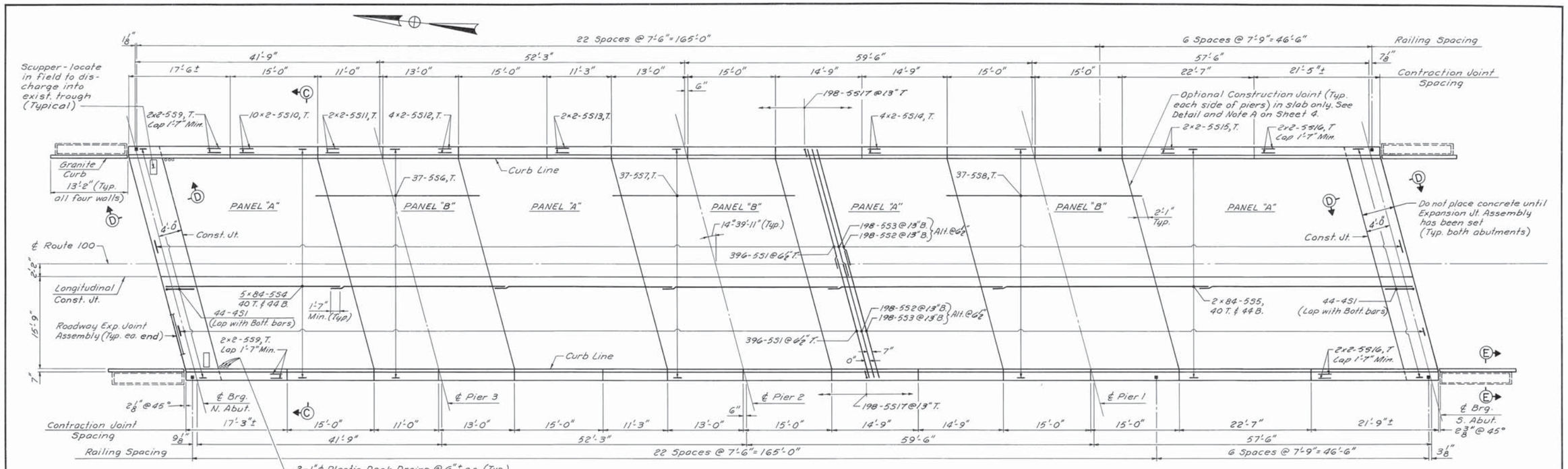

DECK PLAN
⅛" = 1'-0"

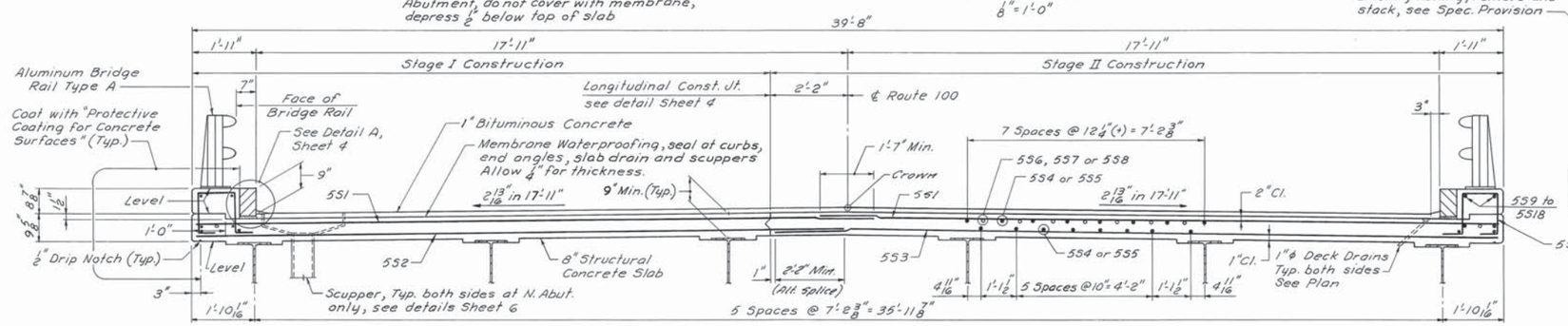

SECTION C-C
½" = 1'-0"

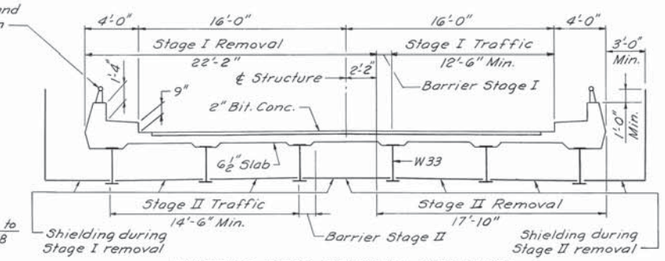

EXISTING DECK REMOVAL SEQUENCE
3/16" = 1'-0"

NOTES:

1. For General Notes and Quantities, see Sheet 3.
2. For 1" V-Groove detail, see Sheet 4.
3. For Roadway Expansion Joint Assembly details, see Sheet 7.
4. For Section E-E, see Sheet 6.
5. For Barrier Details, see Sheet 3.
6. For reinforcing steel in abutment backwalls, see Sheet 7.

* RAIL EXTENSIONS		
CORNER	TOP	BOTTOM
N.E.	1'-11"	1'-6"
N.W.	1'-9"	1'-4"
S.E.	1'-11"	1'-6"
S.W.	2'-1"	1'-8"

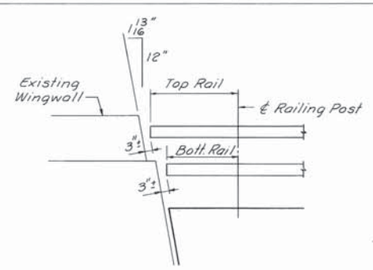

RAILING EXTENSION DETAIL
½" = 1'-0"

* Verify by field measurement before fabrication.

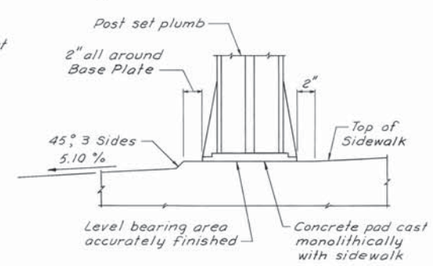

POST SETTING DETAIL
1½" = 1'-0"

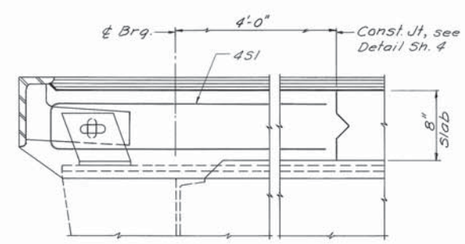

SECTION D-D
1½" = 1'-0"

NO.	REVISION	BY	DATE

	BY	DATE
MADE	J.M.M.	1-78
TRACED		
CHECKED	I.S.	1-78
IN CHARGE OF	J.P.W.	

MAINE TURNPIKE AUTHORITY
MAINE TURNPIKE

ROUTE 100
DECK REPLACEMENT

HOWARD, NEEDLES, TAMMEN & BERGENDOFF
CONSULTING ENGINEERS
BOSTON

SCALE AS NOTED
SHEET NO. 5 of 11

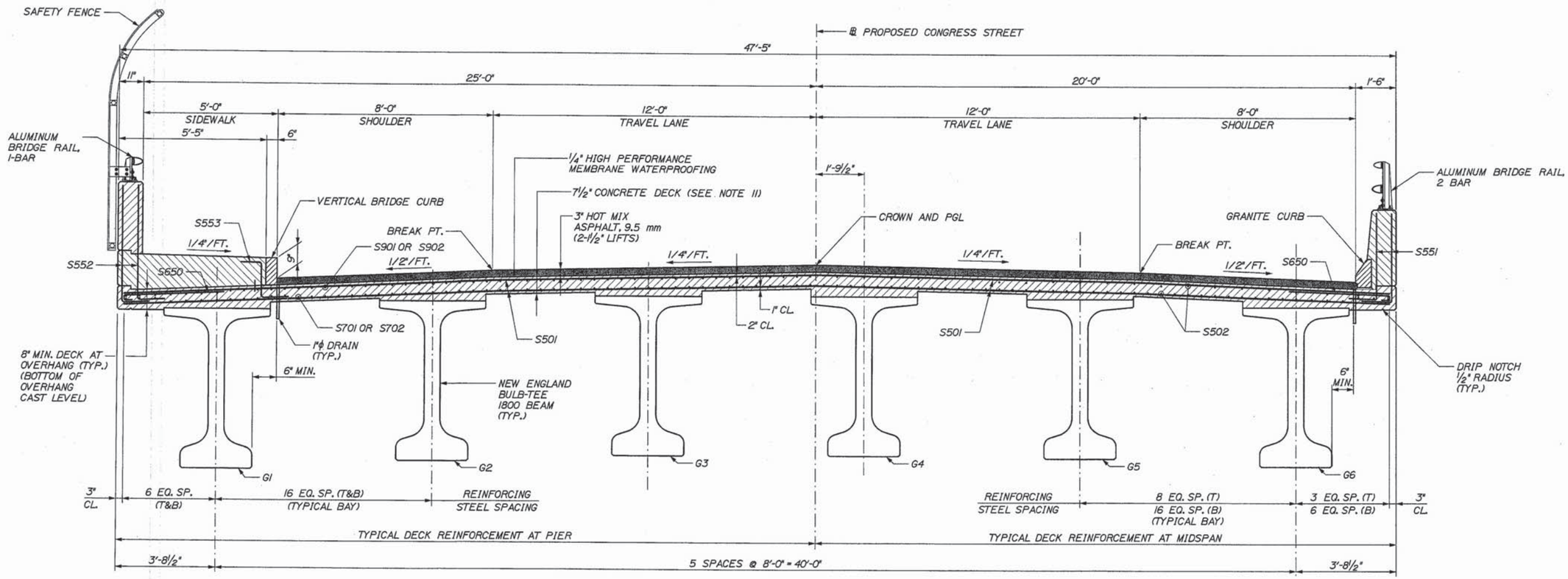

TYPICAL SECTION

(LOOKING UPSTATION)
1/2" = 1'-0"

SUPERSTRUCTURE NOTES:

1. CHAMFER ALL EXPOSED EDGES OF CONCRETE 3/4" UNLESS OTHERWISE NOTED.
2. REINFORCING STEEL SHALL HAVE A MINIMUM COVER OF 2" UNLESS OTHERWISE NOTED.
3. SCREED RAIL SUPPORTS REQUIRED FOR DECK PLACEMENT SHALL BE LOCATED WITHIN 7" OF CENTERLINE OF THE BEAM. SUPPORT MUST CLEAR REINFORCING STEEL.
4. SEE SHEET CS-S32 FOR DECK PLACEMENT SEQUENCE.
5. ADJUST REINFORCING STEEL TO FIT AROUND THE BRIDGE DRAINS AS SHOWN IN THE BRIDGE DRAIN DETAILS. DO NOT CUT TRANSVERSE REINFORCING STEEL.
6. CLEAR PROTECTIVE COATING FOR CONCRETE SURFACES SHALL BE USED AT THE FOLLOWING AREAS: SIDEWALK SURFACE, PARAPET SURFACES, FASCIA DOWN TO DRIP NOTCH AND ALL EXPOSED CONCRETE SURFACES ON THE END POSTS.
7. PAYMENT FOR BRIDGE DRAINS, PVC DRAINS AND SCREENS SHALL BE INCIDENTAL TO ITEM 502.261.
8. STAY IN PLACE FORMS AND PRECAST DECK PANELS ARE NOT ALLOWED.
9. FORM A 1 1/2" V-GROOVE ON THE FASCIAS AT ALL HORIZONTAL CONSTRUCTION JOINTS.
10. FOR 1"ϕ DRAIN LOCATIONS, SEE SHEET NO. CS-S32. DO NOT COVER DECK DRAINS WITH MEMBRANE WATERPROOFING. DEPRESS DRAINS 1/2" BELOW TOP OF SLAB, PROVIDE 23 GAUGE GALVANIZED SCREENS (1/4" MESH) OVER DRAINS.
11. DECK AT OVERHANGS SHALL BE 8" THICK AS SHOWN.
12. FOR BARRIER DETAILS, SEE SHEETS CS-S33 AND CS-S34.
13. THE FORMWORK AND ITS SUPPORTS, OVER THE FULL WIDTH OF THE STRUCTURAL SLAB, SHALL REMAIN IN PLACE UNTIL A MINIMUM OF 48 HOURS HAS ELAPSED AFTER PLACEMENT OF THE FINAL SECTION OF THE SLAB. REMOVAL OF FORMWORK FOR SECTIONS MAY THEN PROCEED AND SHALL MEET THE REQUIREMENTS FOR FORM REMOVAL IN SPECIAL PROVISION SECTION 502. STRUCTURAL CONCRETE.
14. FOR ADDITIONAL SUPERSTRUCTURE NOTES SEE SHEET CS-S32.

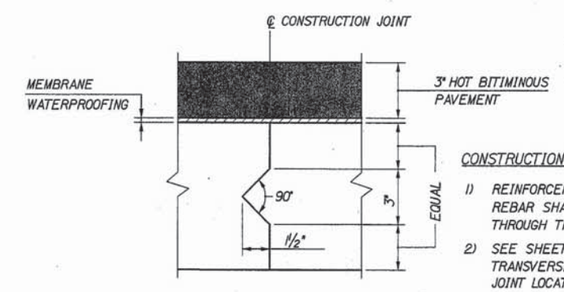

CONSTRUCTION JOINT NOTES:

1) REINFORCEMENT NOT SHOWN. REBAR SHALL BE CONTINUOUS THROUGH THE JOINT
2) SEE SHEET CS-S32 FOR TRANSVERSE CONSTRUCTION JOINT LOCATIONS.

TRANSVERSE CONSTRUCTION JOINT DETAIL

3"=1'-0"

Date:12/15/2006

Filename: ...\CAD\Bridge\089_btyp.dgn

Scale: AS NOTED

No.	Revision	By	Date

Designed by: HNTB

	By	Date		By	Date
Designed	TRC	12/06	Checked	JRB	12/06
Drawn	MPC	12/06	In Charge of	RAL	12/06

HNTB CORPORATION
2 Thomas Drive
Westbrook, ME 04092
TEL (207) 774-5155
FAX (207) 772-7410

MAINE TURNPIKE

THE GOLD STAR MEMORIAL HIGHWAY

CONGRESS STREET UNDERPASS BRIDGE REPLACEMENT

TYPICAL SECTION

SHEET NUMBER: CS-S30

CONTRACT: 2007.01

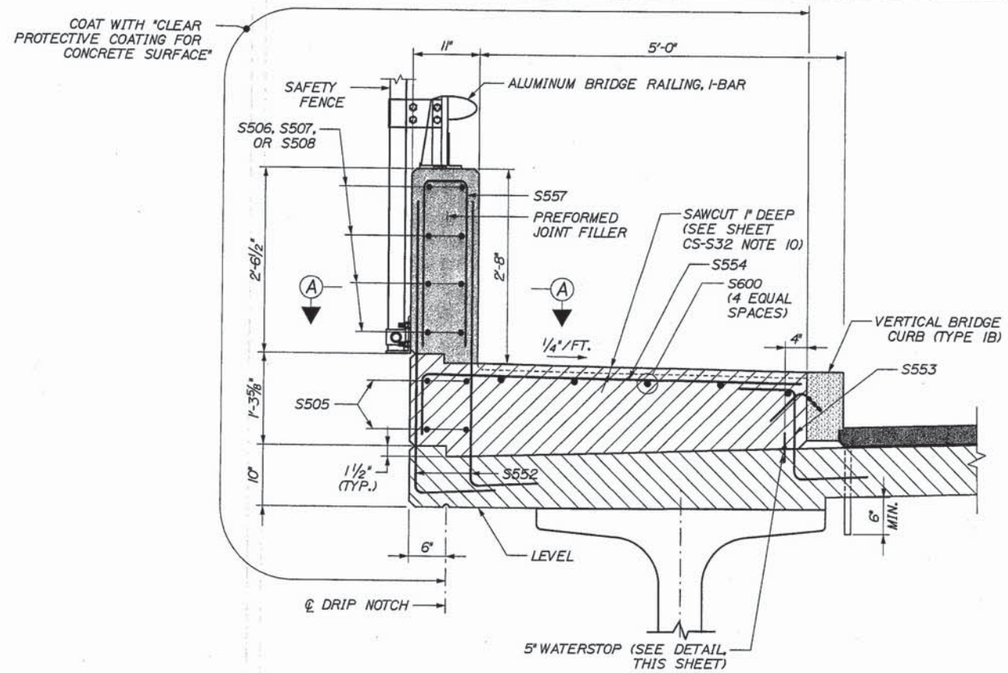

SIDEWALK & SIDEWALK BARRIER DETAIL
1" = 1'-0"

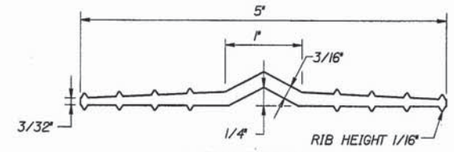

5" WATERSTOP
FULL SIZE

NOTES:

1. SEE SHEET CS-S33 FOR PARAPET NOTES.
2. FOR SECTION A-A, SEE SHEET CS-S33.

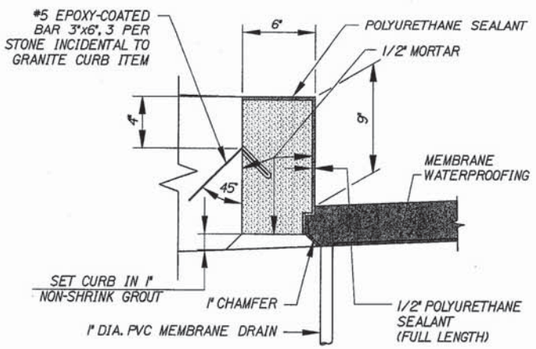

VERTICAL BRIDGE CURB TYPE IB

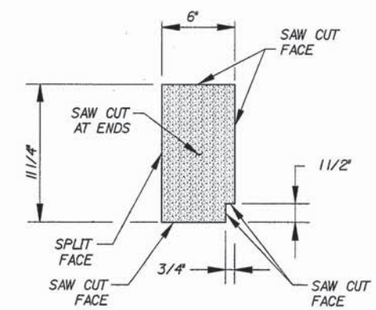

VERTICAL BRIDGE CURB TYPE IB - CUT DETAIL

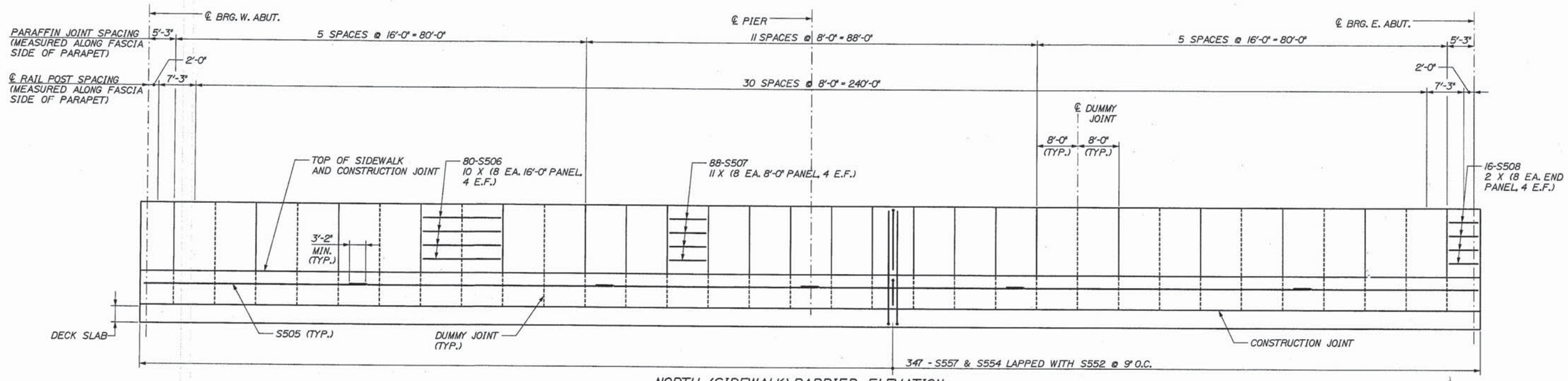

NORTH (SIDEWALK) BARRIER ELEVATION
NORTH FASCIA
HORIZ: 1" = 10'
VERT: 1" = 2'

Date: 12/15/2006

Filename: ...\Bridge\093_parapetdetails2.dgn

Scale: AS NOTED			
No.	Revision	By	Date

Designed by: HNTB

	By	Date		By	Date
Designed	TRC	12/06	Checked	JRB	12/06
Drawn	MPC	12/06	In Charge of	RAL	12/06

HNTB CORPORATION
2 Thomas Drive
Westbrook, ME 04092
TEL (207) 774-5155
FAX (207) 772-7410

MAINE TURNPIKE

THE GOLD STAR MEMORIAL HIGHWAY

CONGRESS STREET UNDERPASS BRIDGE REPLACEMENT

PARAPET & BARRIER DETAILS II

SHEET NUMBER: CS-S34

CONTRACT: 2007.01

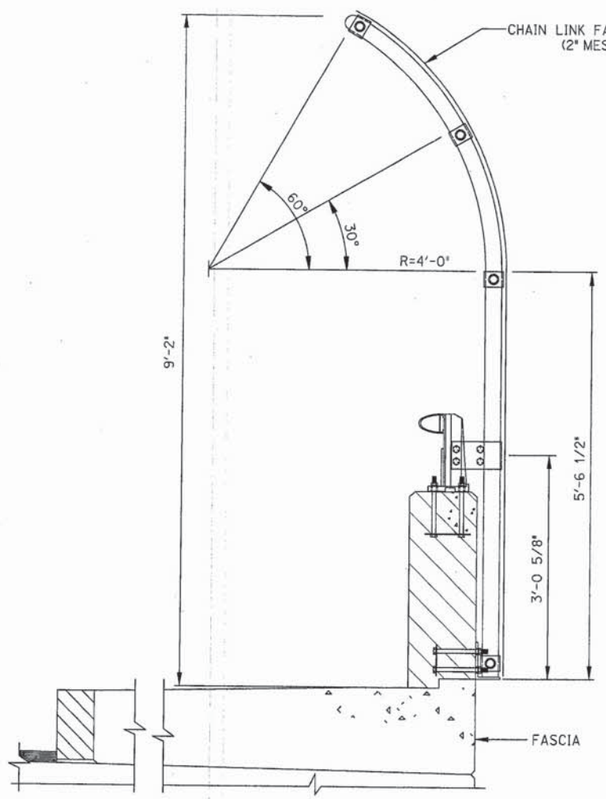

SECTION A-A
1"=1'-0"

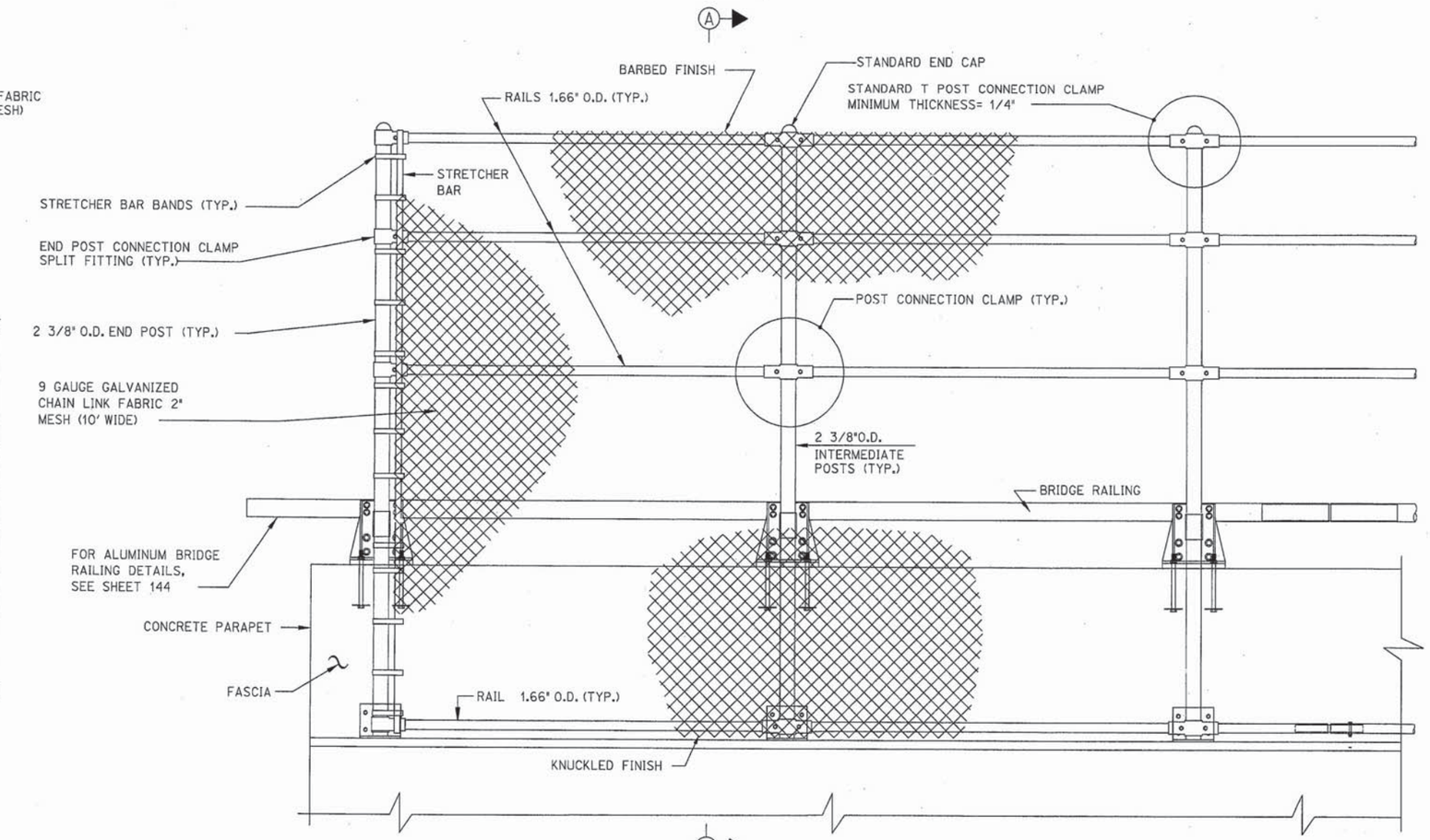

ELEVATION
1"=1'-0"

Date:12/15/2006

Filename: ...\Bridge\103_Fence_Details_1.dgn

Scale:			
No.	Revision	By	Date

Designed by:

HNTB

	By	Date		By	Date
Designed	TRC	12/06	Checked	CAH	12/06
Drawn	MPC	12/06	In Charge of	RAL	12/06

HNTB CORPORATION
2 Thomas Drive
Westbrook, ME 04092
TEL (207) 774-5155
FAX (207) 772-7410

MAINE TURNPIKE

THE GOLD STAR MEMORIAL HIGHWAY

CONGRESS STREET UNDERPASS
BRIDGE REPLACEMENT
SAFETY FENCE
DETAILS I

SHEET NUMBER: CS-S44

CONTRACT: 2007.01

103 OF 111