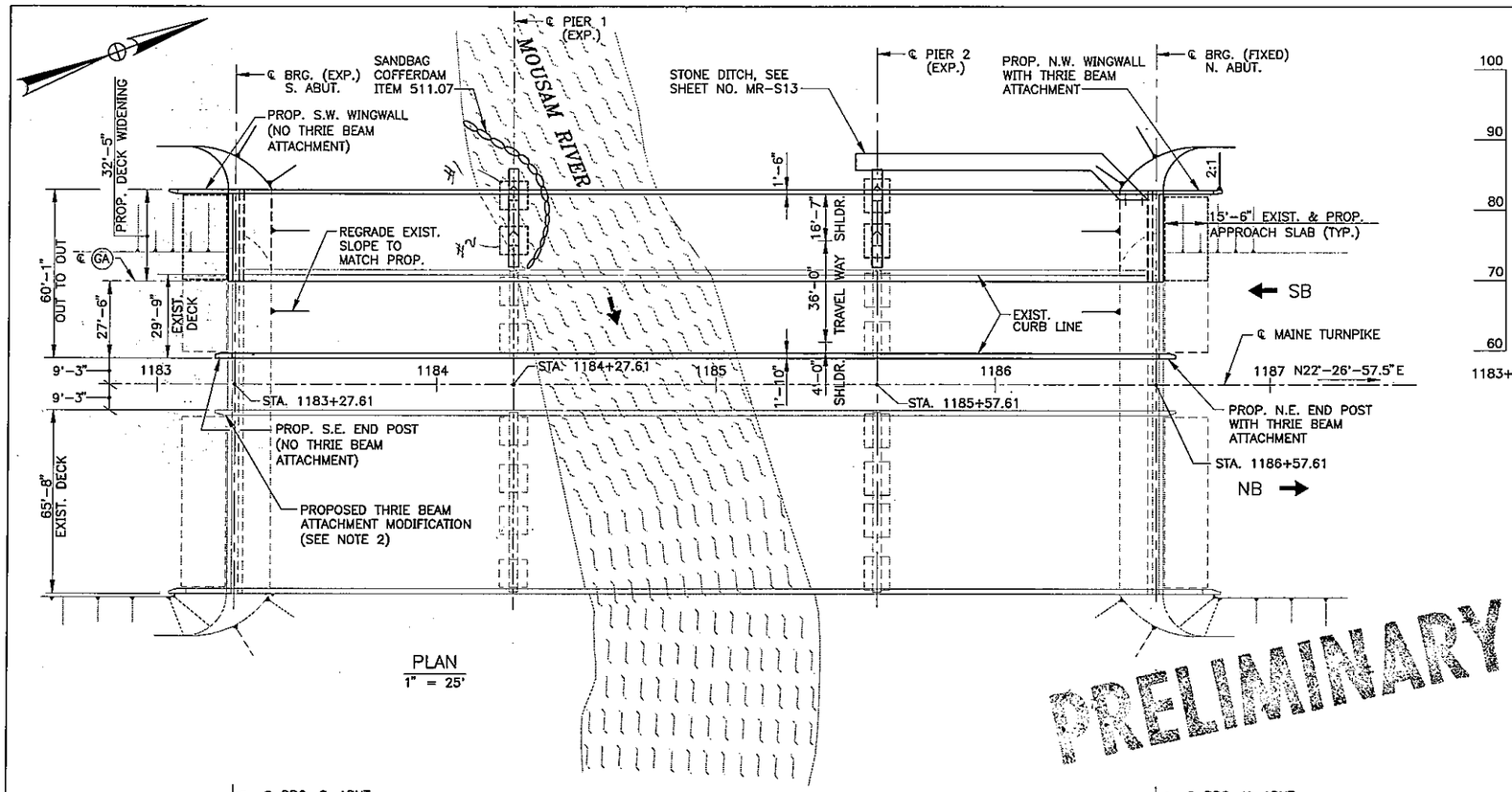

PLAN
1" = 25'

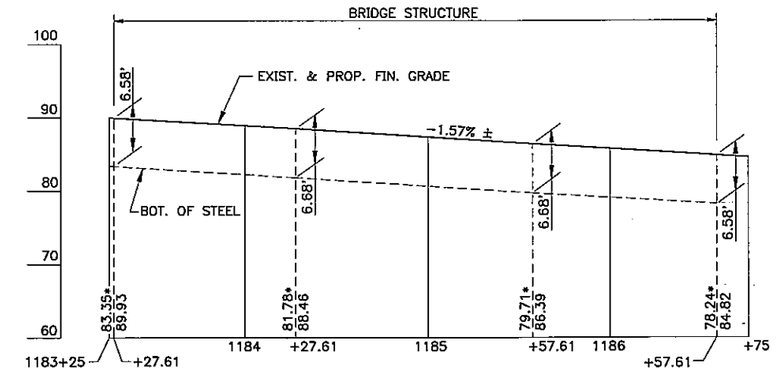

* BOTTOM OF STEEL BASED ON JUNE 2000 SURVEY BY DESLAURIES AND ASSOCIATES, INC.

NOTE
PROFILE GRADE LINE ASSUMED ALONG ℄ EXIST. GIRDER (GA).

PROFILE – MAINE TURNPIKE SB
HOR. 1" = 40'
VERT. 1" = 10'

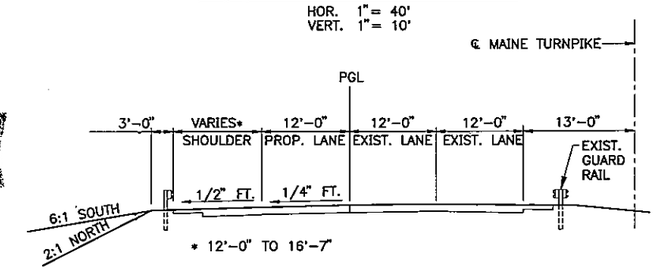

BRIDGE APPROACH SECTIONS
MAINLINE TURNPIKE OVER MOUSAM RIVER
1"=10'

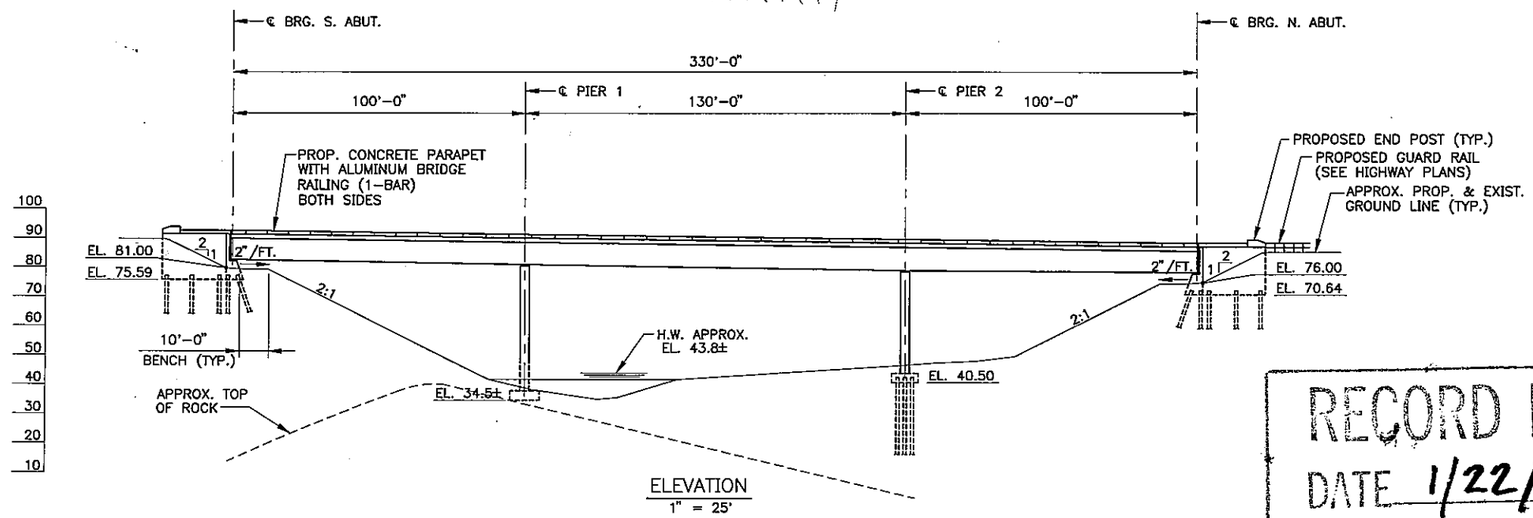

ELEVATION
1" = 25'

PRELIMINARY

RECORD PRINT
DATE 1/22/2001

DIG SAFE NOTE:

AT LEAST 72 HOURS BEFORE DIGGING BEGINS, THE CONTRACTOR IS REQUIRED TO CALL DIG SAFE AT 1-888-DIG-SAFE (344-7233).

NOTES:

1. FOR LIMIT OF DISTURBANCE WITHIN CONSTRUCTION AREA AND ESPECIALLY IN WETLANDS AREA, SEE SHEET NO. MR-C1.
2. THE EXISTING GUARD RAIL ATTACHMENT SHALL BE MODIFIED TO A THRIE BEAM ATTACHMENT. THE COST TO REMOVE THE EXISTING GUARD RAIL CONNECTION, CUT THE EXISTING BOLTS, DRILL NEW HOLES FOR THE PROPOSED CONNECTION ASSEMBLY PLUS REMOVE AND DISPOSE OF ALL DEBRIS SHALL BE INCIDENTAL TO ITEM 606.1724. THE LOCATION FOR THE PROPOSED ATTACHMENT ANCHORAGE SHALL BE DETERMINED BY THE ENGINEER. SEE SPECIFICATIONS FOR FURTHER DETAILS.

M:\09009\002\123\S1GPEMR.DWG 12/26/00 10:42

Scale:AS NOTED

No.	Revision	By	Date

Designed by:

HNTB
ARCHITECTS ENGINEERS PLANNERS

	By	Date		By	Date
Designed	CC	12/00	Checked	JRB	12/00
Drawn	LS	12/00	In Charge of	RAL	12/00

HNTB CORPORATION
2 Thomas Drive
Westbrook, ME 04092
TEL (207) 774-5155
FAX (207) 772-7410

MAINE TURNPIKE AUTHORITY
MODERNIZATION AND WIDENING PROJECT

THINKING AHEAD The Widening

MAINLINE BRIDGE WIDENING
MOUSAM RIVER OVERPASS
GENERAL PLAN & ELEVATION

SHEET NUMBER: MR-S1
XX OF XXX

CONTRACT: 2001.05

GENERAL NOTES

SPECIFICATIONS

DESIGN

AASHTO STANDARD SPECIFICATIONS FOR HIGHWAY BRIDGES SIXTEENTH EDITION 1996 WITH LATEST INTERIM REVISIONS.

CONTRACT

STATE OF MAINE, DEPARTMENT OF TRANSPORTATION, STANDARD SPECIFICATIONS, HIGHWAYS AND BRIDGES, REVISION OF APRIL 1995.

DESIGN LOADING

LIVE LOAD

EXISTING GIRDERS: HS 25, 500,000 CYCLES
PROPOSED GIRDERS: HS 25, 2,000,000 CYCLES

DESIGN METHOD

LOAD FACTOR DESIGN

MATERIALS

CONCRETE

SUPERSTRUCTURE SLAB, PARAPETS AND END POSTS (ABOVE CONST. JT.) CONCRETE SHALL BE CLASS AAA, f'_c = 4,500 P.S.I.
ALL OTHER SUBSTRUCTURE CONCRETE SHALL BE CLASS A, f'_c = 4,000 P.S.I.

REINFORCING STEEL

AASHTO M31, GRADE 60 (EPOXY-COATED AND UNCOATED BARS)

STRUCTURAL STEEL

BEARINGS, WELDED GIRDERS: FLANGES, WEBS, SPLICE PLATES, PLATES AND BEARING STIFFENERS	AASHTO M270, GRADE 50
DIAPHRAGMS AND ALL OTHER STRUCTURAL STEEL	AASHTO M270, GRADE 36
BOLTS	AASHTO M164

NOTES

1. COPIES OF BRIDGE RECONSTRUCTION PLANS OF 1989 (CONTRACT 89.6) ARE ON FILE AT THE MAINE TURNPIKE AUTHORITY. A PORTION OF THESE PLANS ARE INCLUDED IN THIS CONTRACT FOR THE CONTRACTOR'S CONVENIENCE. THE COMPLETENESS AND ACCURACY OF THESE PLANS ARE NOT GUARANTEED.
2. ALL PROPOSED ELEVATIONS REFERENCE THE NORTH AMERICAN VERTICAL DATUM (NAVD) 1988. THE ELEVATIONS REFERENCED ON THE CONTRACT 89.6 PLANS REFERENCE THE NATIONAL GEODETIC VERTICAL DATUM (NGVD) 1929. A COMPARISON OF THE CONTRACT 89.6 PLANS WITH THE JUNE 2000 SURVEY (NAVD) BY DESLAURIES & ASSOCIATES, INC. RESULTS IN AN EQUATION OF APPROXIMATELY NAVD = NGVD − 1.1 FEET.
3. FOR ADDITIONAL DETAILS REFERENCED IN THESE DRAWINGS, SEE THE STATE OF MAINE, DEPARTMENT OF TRANSPORTATION, STANDARD DETAILS, HIGHWAYS AND BRIDGES, APRIL 1997.

SUMMARY OF BRIDGE QUANTITIES

ITEM	DESCRIPTION	UNIT	QUANTITY
202.12	REMOVING EXISTING STRUCTURAL CONCRETE	C.Y.	33
202.122	REMOVING EXISTING SUPERSTRUCTURE CONCRETE (140 S.Y.)*	L.S.	1
202.127	REMOVING EXISTING BITUMINOUS PAVEMENT (39 C.Y.)*	L.S.	1
203.25	GRANULAR BORROW (FOR UNDERWATER BACKFILL)	C.Y.	190
206.082	STRUCTURAL EARTH EXCAVATION – MAJOR STRUCTURES	C.Y.	130
206.10	STRUCTURAL EARTH EXCAVATION – PIERS	C.Y.	256
206.11	STRUCTURAL ROCK EXCAVATION – PIERS	C.Y.	25
304.10	AGGREGATE SUBBASE COURSE – GRAVEL	C.Y.	27
403.08	HOT BITUMINOUS PAVEMENT, TURNPIKE GRADING C	TON	180
501.231	DYNAMIC LOADING TEST	EACH	3
501.40	STEEL H-BEAM PILES 53 LBS/FT, DELIVERED	L.F.	3,242
501.401	STEEL H-BEAM PILES 53 LBS/FT, IN PLACE	L.F.	3,242
501.90	PILE TIPS	EACH	52
502.21	STRUCTURAL CONCRETE, ABUTMENTS AND RETAINING WALLS	C.Y.	145
502.23	STRUCTURAL CONCRETE PIERS	C.Y.	165
502.26323	STRUCTURAL CONCRETE ROADWAY AND END POSTS ON STEEL BRIDGES – MOUSAM RIVER (310 C.Y.)*	L.S.	1
502.26423	STRUCTURAL CONCRETE PARAPETS – MOUSAM RIVER (58 C.Y.)*	L.S.	1
502.3123	STRUCTURAL CONCRETE APPROACH SLAB – MOUSAM RIVER (26 C.Y.)*	L.S.	1
502.56	CONCRETE FILL	C.Y.	30
502.6312	ABUTMENT AND BRIDGE SEAT REPAIR-SECTION I	S.F.	35
502.6314	PIER REPAIRS	S.F.	125
503.12	REINFORCING STEEL, FABRICATED AND DELIVERED	LB.	60,510
503.13	REINFORCING STEEL, PLACING	LB.	60,510
503.14	EPOXY-COATED REINFORCING STEEL, FABRICATED AND DELIVERED	LB.	115,080
503.15	EPOXY-COATED REINFORCING STEEL, PLACING	LB.	115,080
504.70223	STRUCTURAL STEEL FABRICATED AND DELIVERED, WELDED – MOUSAM RIVER (24,400 LBS. GRADE 36; 352,550 LBS. GRADE 50)*	L.S.	1
504.7123	STRUCTURAL STEEL ERECTION – MOUSAM RIVER (376,950 LBS.)*	L.S.	1
504.74	REPAIR OF BRIDGE BEARING BOLT ASSEMBLIES	EACH	16
506.3023	SHOP COATING OF STRUCTURAL STEEL – MOUSAM RIVER (376,950 LBS.)*	L.S.	1
506.3123	FIELD REPAIR OF DAMAGED COATING – MOUSAM RIVER	L.S.	1
507.09123	ALUMINUM BRIDGE RAILING, 1-BAR – MOUSAM RIVER (670 LF.)*	L.S.	1
508.1323	MEMBRANE WATERPROOFING – MOUSAM RIVER (2,210 S.Y.)*	L.S.	1
511.07	COFFERDAM	L.S.	1
511.09123	TEMPORARY EARTH SUPPORT SYSTEM – MOUSAM RIVER	L.S.	1
512.08123	FRENCH DRAINS – MOUSAM RIVER (45 L.F.)*	L.S.	1
514.06	CURING BOX FOR CONCRETE CYLINDERS	EACH	1
515.201	PIGMENTED PROTECTIVE COATING FOR CONCRETE SURFACES	S.Y.	160
515.202	CLEAR PROTECTIVE COATING FOR CONCRETE SURFACE	S.Y.	715
520.21	EXPANSION DEVICE – GLAND SEAL (33 L.F.)*	EACH	1
522.06	MODULAR EXPANSION DEVICES (30 L.F.)*	EACH	1
524.40	PROTECTIVE SHIELD	S.Y.	1,803
609.15	SLOPED CURB TYPE 1	L.F.	390
609.152	FIELD SAW CUT SLOPED CURB TYPE 1	L.F.	332
610.18	STONE DITCH PROTECTION	C.Y.	40
626.223	NON-METALLIC CONDUIT (6"ø MULTI-CELLED BULLET RESISTANT FIBERGLASS)	L.F.	339

* QUANTITIES FOR ESTIMATING PURPOSES ONLY

ABBREVIATIONS

S.B.	SOUTHBOUND
N.B.	NORTHBOUND
N.F.	NEAR FACE
F.F.	FAR FACE
E.F.	EACH FACE
E.W.	EACH WAY

INDEX OF DRAWINGS

SHEET NO.	TITLE
MR-S1	GENERAL PLAN & ELEVATION
MR-S2	GENERAL NOTES, INDEX & QUANTITIES
MR-S3	BORING PLAN AND LOGS
MR-S4	BORING LOGS
MR-S5	FOUNDATION PLAN
MR-S6	ABUTMENT DEMOLITION DETAILS
MR-S7	SOUTH ABUTMENT – SOUTHBOUND
MR-S8	NORTH ABUTMENT – SOUTHBOUND
MR-S9	SOUTH ABUTMENT REINFORCEMENT
MR-S10	NORTH ABUTMENT REINFORCEMENT
MR-S11	PIER 1
MR-S12	PIER 2
MR-S13	MISCELLANEOUS SUBSTRUCTURE DETAILS
MR-S14	WINGWALL DETAILS I
MR-S15	WINGWALL DETAILS II
MR-S16	END POST MODIFICATIONS
MR-S17	EXISTING BRIDGE REPAIRS
MR-S18	DECK CONSTRUCTION SEQUENCE
MR-S19	FRAMING PLAN & DETAILS
MR-S20	STEEL DETAILS I
MR-S21	STEEL DETAILS II
MR-S22	DECK PLAN & SECTION
MR-S23	SUPERSTRUCTURE DETAILS I
MR-S24	SUPERSTRUCTURE DETAILS II
MR-S25	PARAPET DETAILS I
MR-S26	PARAPET DETAILS II
MR-S27	ALUMINUM BRIDGE RAIL DETAILS
MR-S28	SOUTH ABUTMENT EXPANSION JOINT DETAILS
MR-S29	NORTH ABUTMENT GLAND SEAL JOINT DETAILS
MR-S30	MISCELLANEOUS DECK JOINT DETAILS
MR-S31	REINFORCING STEEL SCHEDULE I
MR-S32	REINFORCING STEEL SCHEDULE II

CONTRACT 89.6 PLANS

SHEET NO.	TITLE
8	BD 102-89 BEARING PEDESTALS
11	BD 125-82 EXPANSION DEVICE
14	BD 128-82 EXPANSION DEVICE
16	GENERAL PLAN & ELEVATION
18	BORING DETAILS
19	BORING DETAILS
22	NORTH ABUTMENT I
25	SOUTH ABUTMENT II
26	WINGWALLS, END POSTS & APPROACH SLAB DETAILS
34	SUPERSTRUCTURE DETAILS II (SOUTHBOUND)
35	MISCELLANEOUS DETAILS
A12272 1 OF 3	WABO D-600 EXP. JT. DETAILS
A12272 2 OF 3	WABO D-600 EXP. JT. DETAILS
A12272 3 OF 3	WABO D-600 MODULAR EXP. JOINT DETAILS
A12295 1 OF 3	WABO STRIP SEAL TYPE "E" EXP. JT. DETAILS
A12295 2 OF 3	WABO STRIP SEAL TYPE "E" EXP. JT. DETAILS
A12295 3 OF 3	WABO STRIP SEAL TYPE "E" EXP. JT. DETAILS

M:\09009\002\123\S6INXMR.DWG 12/26/00 07:22

Scale: NO SCALE

No.	Revision	By	Date

Designed by:

HNTB
ARCHITECTS ENGINEERS PLANNERS

	By	Date		By	Date
Designed	CC	12/00	Checked	JRB	12/00
Drawn	RJC	12/00	In Charge of	RAL	12/00

HNTB CORPORATION
2 Thomas Drive
Westbrook, ME 04092
TEL (207) 774-5155
FAX (207) 772-7410

MAINE TURNPIKE AUTHORITY
MODERNIZATION AND WIDENING PROJECT

THINKING AHEAD The Widening

MAINLINE BRIDGE WIDENING
MOUSAM RIVER OVERPASS
GENERAL NOTES, INDEX & QUANTITIES

SHEET NUMBER: MR-S2
XX OF XX

CONTRACT: 2001.05

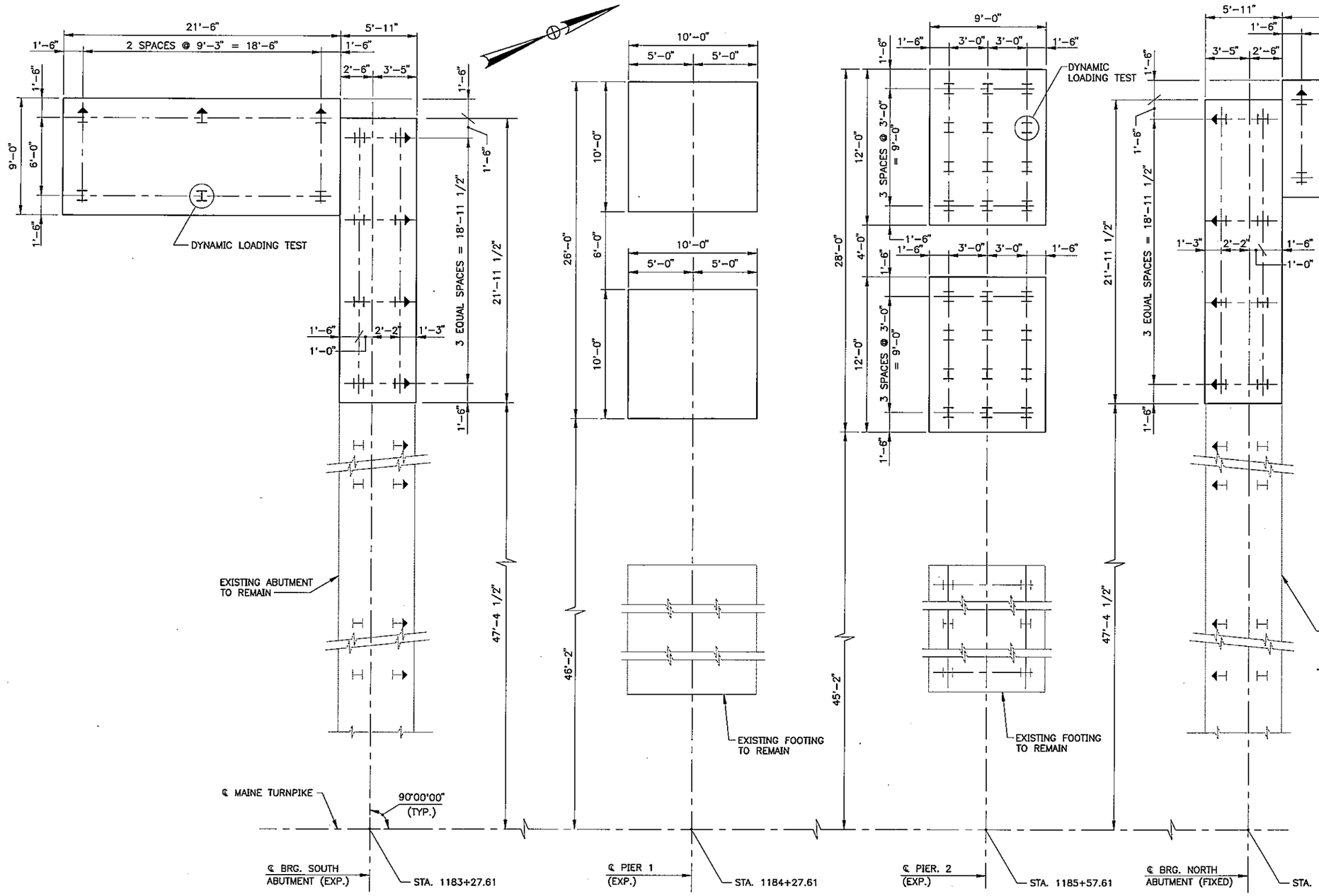

PILE NOTES:

1. ALL PILES SHALL BE HP12x53 CONFORMING TO ASTM DESIGNATION A709, GRADE 50.
2. PILES MARKED THUS ⊢→, SHALL BE BATTERED 4" PER FOOT IN THE DIRECTION OF THE ARROW.
3. PILES AT BOTH ABUTMENTS SHALL BE DRIVEN TO AN ULTIMATE CAPACITY OF 168 TONS. DESIGN LOAD = 70 TONS AND F.S. = 2.25. ALLOWANCE FOR DOWNDRAG = 10 TONS. PILES AT PIER 2 SHALL BE DRIVEN TO AN ULTIMATE CAPACITY OF 158 TONS. DESIGN LOAD = 70 TONS AND F.S. = 2.25. CONSTRUCTION CONTROL: WAVE EQUATION ANALYSIS AND DYNAMIC LOADING TEST IS REQUIRED PRIOR TO INSTALLATION OF PRODUCTION PILES.
4. ESTIMATE OF PILES REQUIRED:
   NORTH ABUTMENT:
   7 @ 95' = 665 LF
   7 @ 100' = 700 LF
   SOUTH ABUTMENT:
   7 @ 64' = 448 LF
   7 @ 67' = 469 LF
   PIER 2:
   24 @ 40' = 960 LF

NOTES:

1. COVER FOR FOOTING REINFORCING STEEL SHALL BE 3".
2. PIER 1 SPREAD FOOTING SHALL BE EXCAVATED TO COMPETENT ROCK:
   qALLOW = 20 TSF (ON ROCK)
3. FOR PAY LIMITS AT PIERS, SEE SHEET NO. MR-S13.
4. FOR ADDITIONAL PAY LIMITS AT ABUTMENTS, SEE SHEET NO. MR-S13.
5. FOR SUBSURFACE DATA, REFER TO BORING DETAILS FROM CONTRACT 89.6 PLANS AND SHEET NOS. MR-S3 AND MR-S4.
6. FOR PREPARATION OF PIER FOOTING BASE, SEE PAY LIMITS – PIERS ON SHEET NO. MR-S13.

M:\09009\002\123\S1FNDMR.DWG 12/26/00 10:40

Scale:AS NOTED

No.	Revision	By	Date

Designed by:

HNTB
ARCHITECTS ENGINEERS PLANNERS

	By	Date		By	Date
Designed	CC	12/00	Checked	JRB	12/00
Drawn	RJC	12/00	In Charge of	RAL	12/00

HNTB CORPORATION
2 Thomas Drive
Westbrook, ME 04092
TEL (207) 774-5155
FAX (207) 772-7410

MAINE TURNPIKE AUTHORITY
MODERNIZATION AND WIDENING PROJECT

THINKING AHEAD The Widening

MAINLINE BRIDGE WIDENING
MOUSAM RIVER OVERPASS
FOUNDATION PLAN

SHEET NUMBER: MR-S5
XX OF XXX

CONTRACT: 2001.05

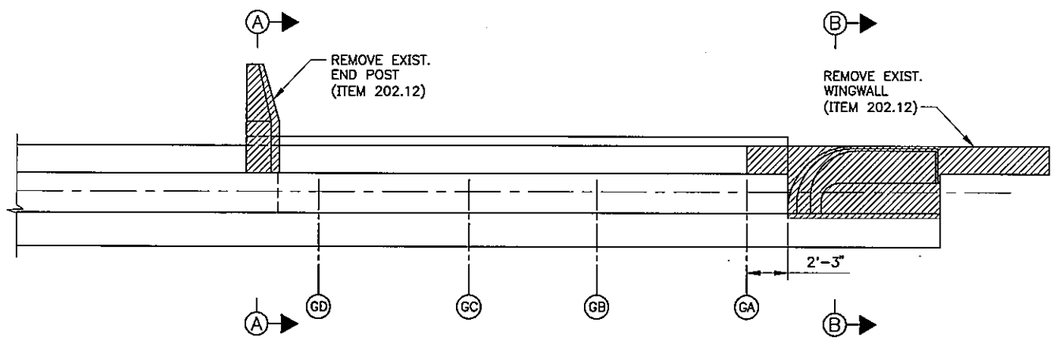

EXISTING ABUTMENT PLAN
1/4" = 1'-0"

SOUTH ABUTMENT PLAN SHOWN,
NORTH ABUTMENT PLAN SIMILAR, OPPOSITE HAND

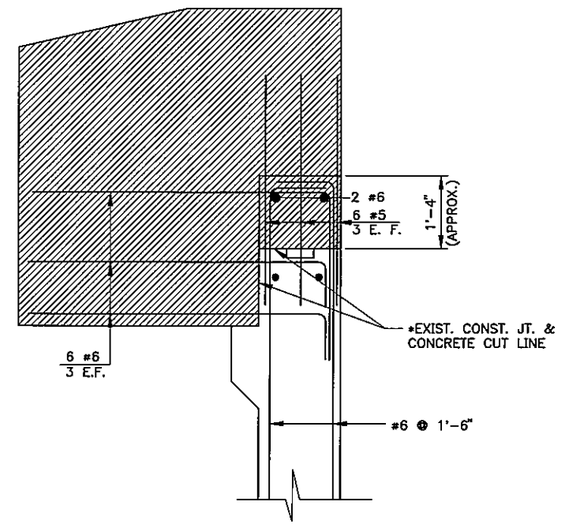

SECTION A–A
3/4" = 1'-0"

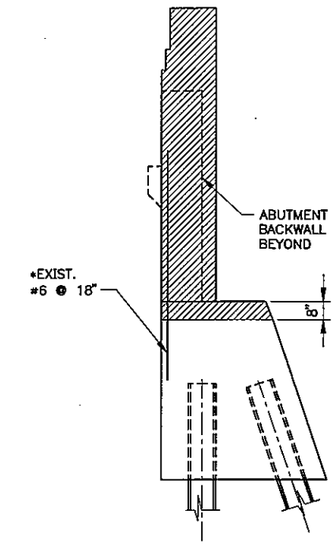

*EXIST. REINF. SHOWN FOR INFORMATION ONLY. STEEL SHALL NOT BE REUSED.

SECTION B–B
3/8" = 1'-0"

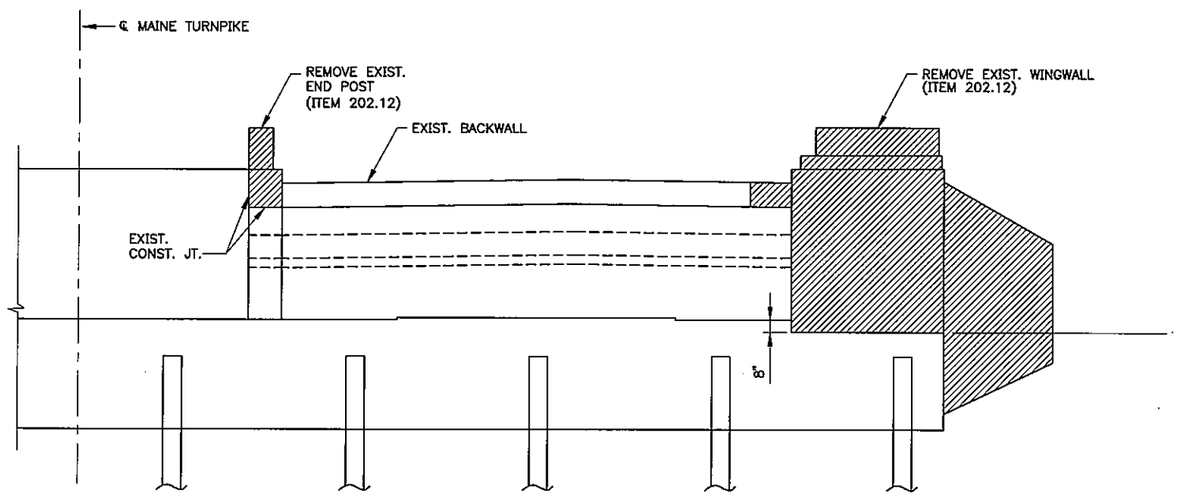

EXISTING ABUTMENT ELEVATION
1/4" = 1'-0"

SOUTH ABUTMENT ELEVATION SHOWN,
NORTH ABUTMENT ELEVATION SIMILAR, OPPOSITE HAND

NOTES

REMOVE EXISTING CONCRETE WITHIN HATCH AREA (TYP.)

1. SEE ABUTMENT NOTES ON SHEET MR–S7 FOR ADDITIONAL REQUIREMENTS.

M:\09009\002\123\S5SABDMR.DWG 12/15/00 08:39

Scale: AS NOTED

No.	Revision	By	Date

Designed by:

HNTB
ARCHITECTS ENGINEERS PLANNERS

	By	Date		By	Date
Designed	CC	12/00	Checked	JRB	12/00
Drawn	RJC	12/00	In Charge of	RAL	12/00

HNTB CORPORATION
2 Thomas Drive
Westbrook, ME 04092
TEL (207) 774–5155
FAX (207) 772–7410

MAINE TURNPIKE AUTHORITY
MODERNIZATION AND WIDENING PROJECT

THINKING AHEAD The Widening

MAINLINE BRIDGE WIDENING
MOUSAM RIVER OVERPASS
ABUTMENT DEMOLITION DETAILS

SHEET NUMBER: MR–S6
XX OF XXX

CONTRACT: 2001.05

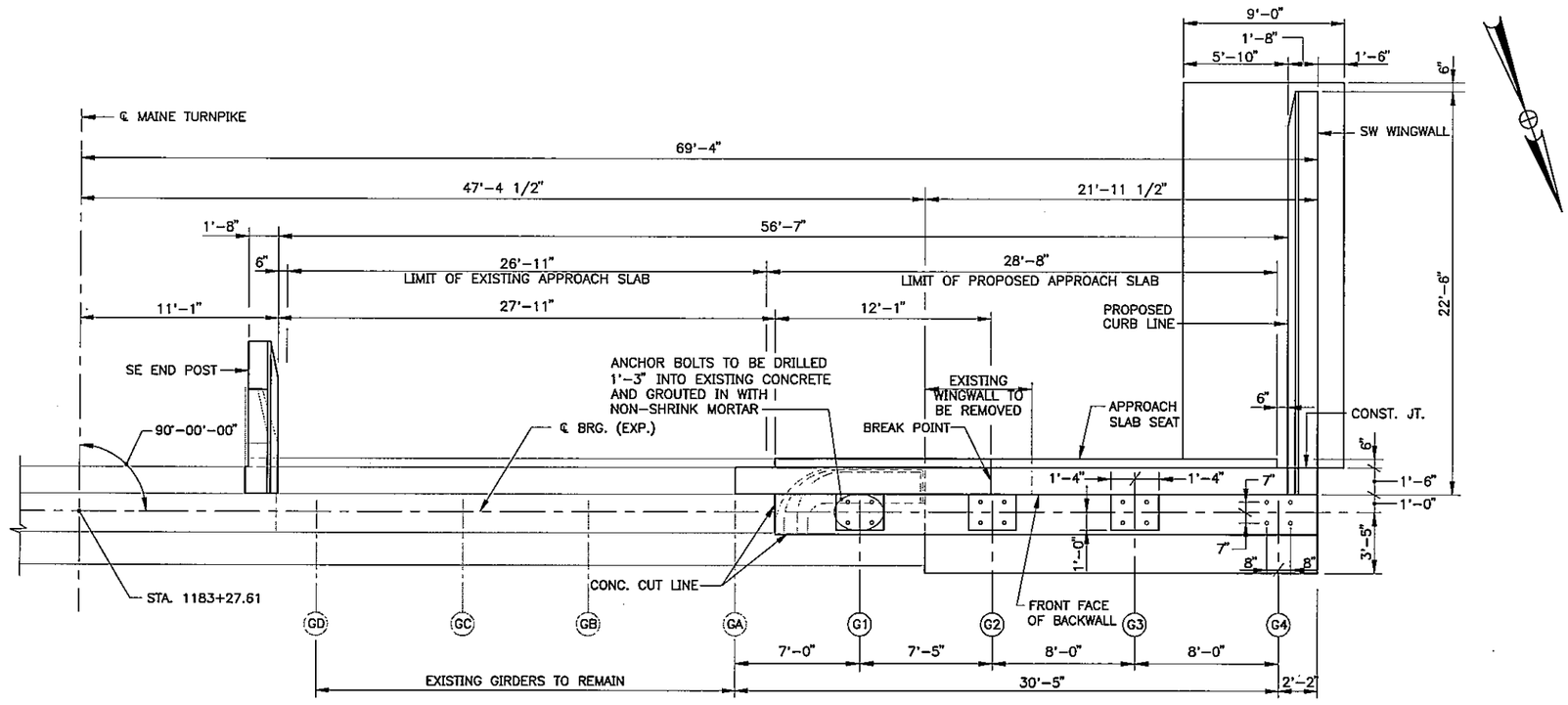

PLAN

SOUTH ABUTMENT – SOUTHBOUND

1/4" = 1'-0"

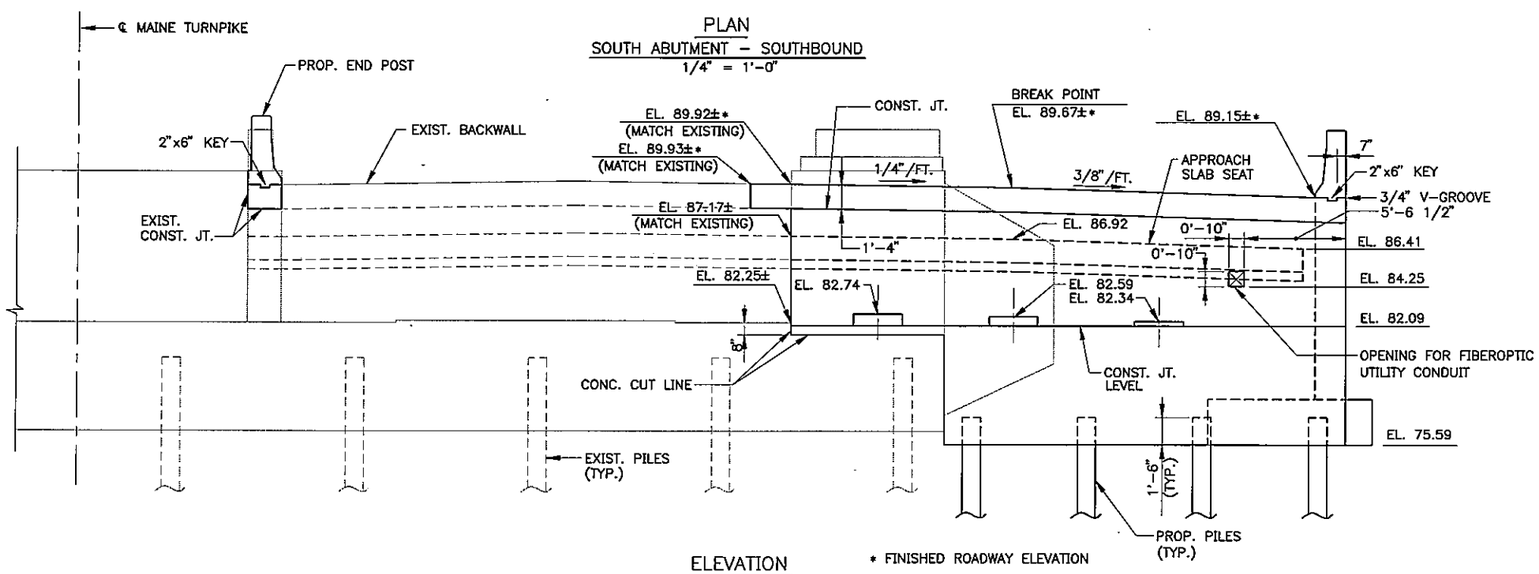

ELEVATION

1/4" = 1'-0"

* FINISHED ROADWAY ELEVATION

NOTES

1. REINFORCING STEEL SHALL HAVE 2" MINIMUM COVER UNLESS OTHERWISE NOTED.
2. PLACE REINFORCING STEEL TO CLEAR ANCHOR BOLTS.
3. PAYMENT FOR DRILLING HOLES AND GROUTING DOWELS TO BE INCIDENTAL TO ITEM 503.13. PAYMENT FOR DRILLING HOLES AND GROUTING ANCHOR BOLTS TO BE INCIDENTAL TO ITEM 504.70223. ALL DOWELS AND ANCHOR BOLTS TO BE GROUTED WITH NON-SHRINK GROUT.
4. CHAMFER ALL EXPOSED EDGES OF CONCRETE 3/4".
5. TOP PORTION OF ABUTMENT BACKWALL SHALL NOT BE PLACED UNTIL AFTER EXPANSION JOINT ASSEMBLY IS PLACED AND ADJUSTED.
6. COVER HORIZONTAL & VERTICAL CONSTRUCTION JOINTS ON THE BACK FACE WITH TWO LAYERS OF HEAVY ROOFING FELT. SEE MDOT STANDARD DETAIL SHEET 502(1).
7. WATERSTOPS ARE NOT REQUIRED IN HORIZONTAL CONSTRUCTION JOINTS IN ABUTMENT BACKWALLS.
8. REMOVAL LIMITS OF EXISTING CONCRETE THAT DO NOT FALL AT AN EXISTING CONSTRUCTION JOINT AND THAT WILL BE EXPOSED IN THE COMPLETED STRUCTURE SHALL BE CUT ALONG THESE LIMITS WITH A MASONRY SAW TO A MINIMUM DEPTH OF 1" FROM THE SURFACE. THE CONCRETE SHALL THEN BE REMOVED IN A MANNER THAT WILL LEAVE THE SAW CUT EDGES UNDAMAGED. CONTRACTOR SHALL BE CAREFUL NOT TO DAMAGE EXISTING STEEL EDGE BEAMS, SUPPORT BEAM AND SUPPORT BOXES THAT ARE TO REMAIN IN PLACE. ANY DAMAGE TO THE EXISTING STEEL EDGE BEAMS, SUPPORT BEAM OR SUPPORT BOXES SHALL BE REPAIRED BY THE CONTRACTOR AT NO COST TO THE AUTHORITY. CONTRACTOR SHALL THEN SUBMIT A METHOD OF REPAIR TO THE ENGINEER FOR APPROVAL.
9. FOR LIMITS OF CLEAR PROTECTIVE COATING AND PIGMENTED PROTECTIVE COATING, SEE SHEET NO. MR-S14.
10. FOR BEARING PEDESTALS AND ANCHOR BOLT DETAILS, SEE SHEET NO. MR-S21 FOR SOUTH ABUTMENT AND MDOT STANDARD DETAILS SHEETS 504 (9 TO 14) FOR NORTH ABUTMENT.
11. ALL EXPOSED EXISTING SURFACES, AT THE INTERFACES OF THE BACKWALL AND BRIDGE SEAT, SHALL BE CLEAN AND FREE OF BOND INHIBITING MATERIALS. THE SURFACES SHALL BE ROUGHENED AND THEN A BONDING AGENT, APPROVED OF BY THE ENGINEER, SHALL BE APPLIED PRIOR TO NEW CONCRETE PLACEMENTS. PAYMENT TO BE INCIDENTAL TO ITEM 502.21.
12. EXISTING DECK JOINTS SHALL REMAIN. SELECTIVE REMOVAL OF THE EXISTING DECK JOINT TO JOIN NEW DECK JOINT SHALL BE INCIDENTAL TO ITEM 202.12.
13. FOR END POST MODIFICATIONS, SEE SHEET NOS. MR-S16 AND MR-S17.
14. FOR WINGWALL DETAILS, SEE SHEET NOS. MR-S14 AND MR-S15.
15. THE CONTRACTOR SHALL INSTALL TEMP. EARTH SUPPORT SYSTEM TO SUPPORT ROADWAY. AT THE CONTRACTOR'S OPTION HE MAY REPLACE THE EXISTING ROADWAY AND APPROACH SLAB AS NEEDED. THE REMOVAL AND REPLACEMENT OF EXISTING ROADWAY AND APPROACH SLAB SHALL BE INCIDENTAL TO ITEM 511.09123.

Scale: AS NOTED

No.	Revision	By	Date

Designed by:

HNTB

ARCHITECTS ENGINEERS PLANNERS

	By	Date		By	Date
Designed	CC	12/00	Checked	JRB	12/00
Drawn	LS	12/00	In Charge of	RAL	12/00

HNTB CORPORATION
2 Thomas Drive
Westbrook, ME 04092
TEL (207) 774-5155
FAX (207) 772-7410

MAINE TURNPIKE AUTHORITY
MODERNIZATION AND WIDENING PROJECT

THINKING AHEAD The Widening

MAINLINE BRIDGE WIDENING
MOUSAM RIVER OVERPASS
SOUTH ABUTMENT – SOUTHBOUND

SHEET NUMBER: MR-S7

CONTRACT: 2001.05

XX OF XXX

M:\09009\002\123\S1SABTMR.DWG 12/22/00 10:55

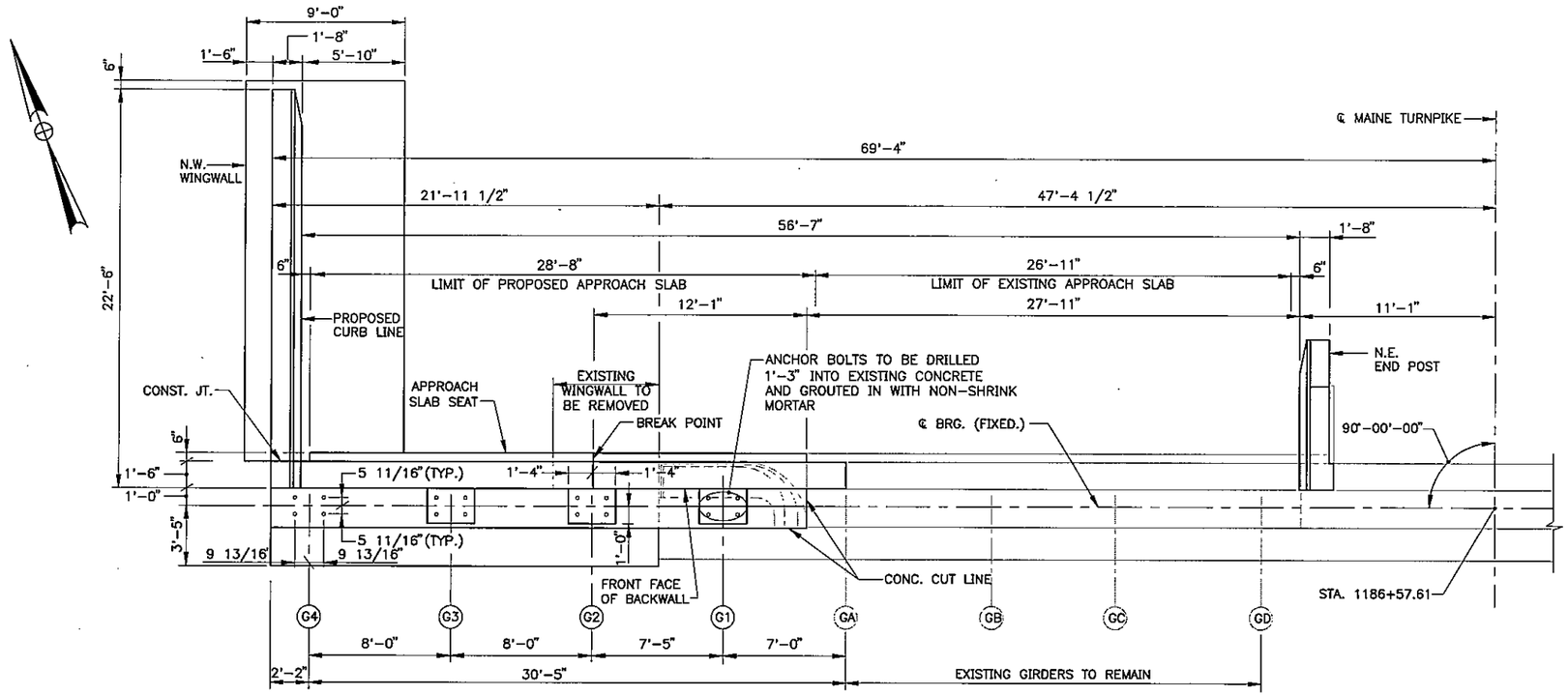

PLAN
NORTH ABUTMENT – SOUTHBOUND
1/4" = 1'-0"

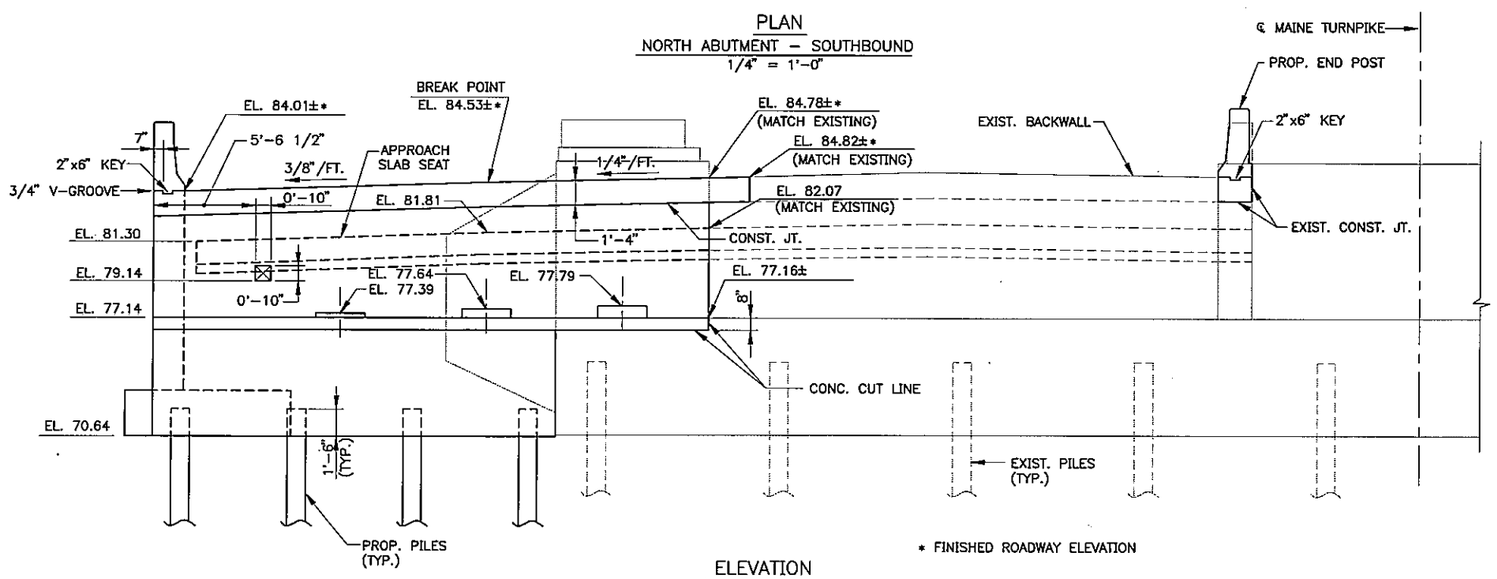

* FINISHED ROADWAY ELEVATION

ELEVATION
1/4" = 1'-0"

NOTE

1. FOR NOTES, SEE SHEET NO. MR-S7.

Scale:AS NOTED			
No.	Revision	By	Date

Designed by:

HNTB
ARCHITECTS ENGINEERS PLANNERS

	By	Date		By	Date
Designed	CC	12/00	Checked	JRB	12/00
Drawn	LS	12/00	In Charge of	RAL	12/00

HNTB CORPORATION
2 Thomas Drive
Westbrook, ME 04092
TEL (207) 774-5155
FAX (207) 772-7410

MAINE TURNPIKE AUTHORITY
MODERNIZATION AND WIDENING PROJECT

THINKING AHEAD The Widening

MAINLINE BRIDGE WIDENING
MOUSAM RIVER OVERPASS
NORTH ABUTMENT – SOUTHBOUND

SHEET NUMBER: MR-S8
XX OF XXX

CONTRACT: 2001.05

M:\09009\002\123\S1NABTMR.DWG 12/22/00 11:00

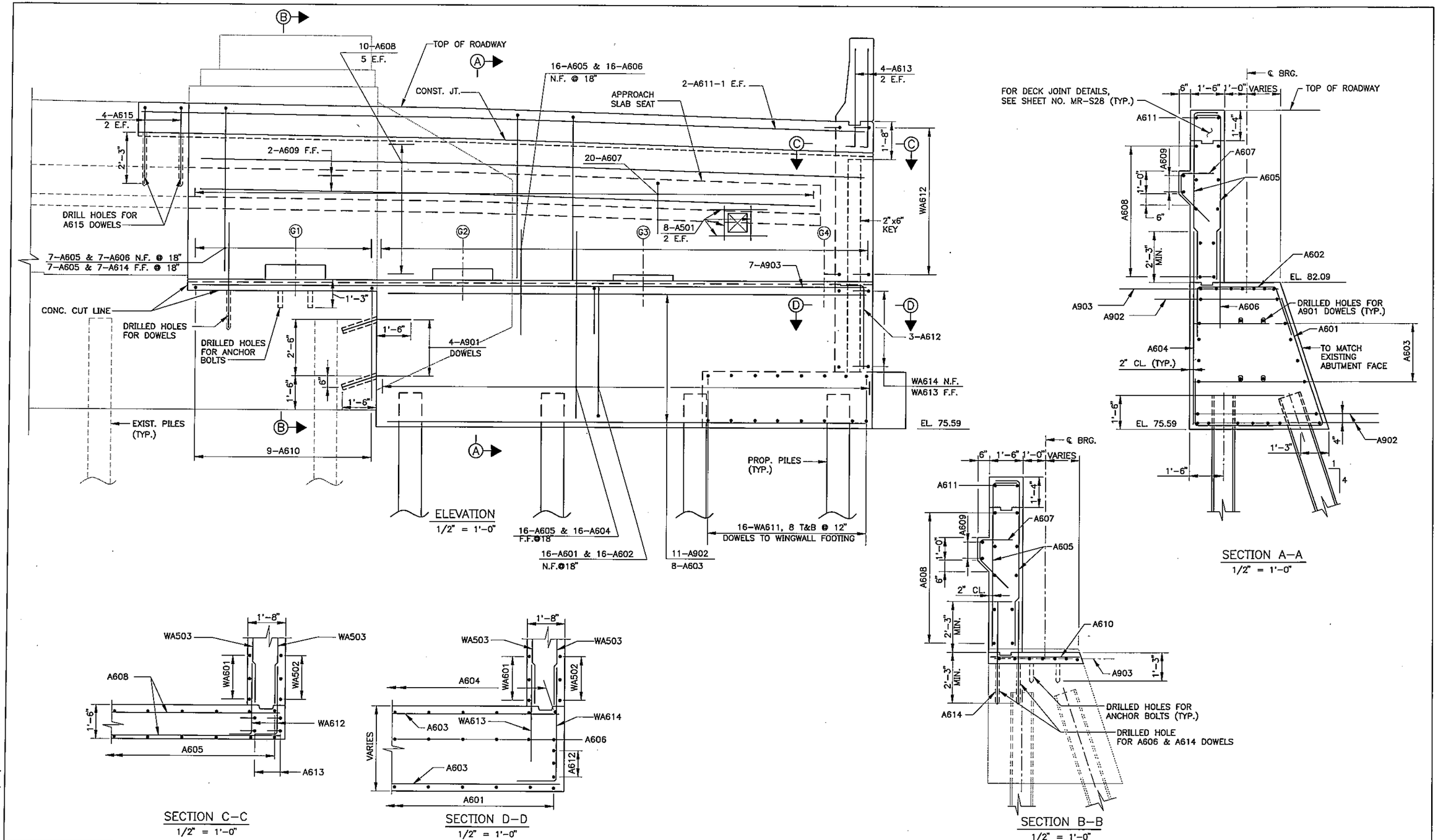

Scale: AS NOTED

No.	Revision	By	Date

Designed by:

HNTB
ARCHITECTS ENGINEERS PLANNERS

	By	Date		By	Date
Designed	CC	12/00	Checked	JRB	12/00
Drawn	LS	12/00	In Charge of	RAL	12/00

HNTB CORPORATION
2 Thomas Drive
Westbrook, ME 04092
TEL (207) 774-5155
FAX (207) 772-7410

MAINE TURNPIKE AUTHORITY
MODERNIZATION AND WIDENING PROJECT

THINKING AHEAD The Widening

MAINLINE BRIDGE WIDENING
MOUSAM RIVER OVERPASS
SOUTH ABUTMENT REINFORCEMENT

SHEET NUMBER: MR-S9
XX OF XXX

CONTRACT: 2001.05

M:\09009\002\123\S1SREMR.DWG 12/15/00 11:39

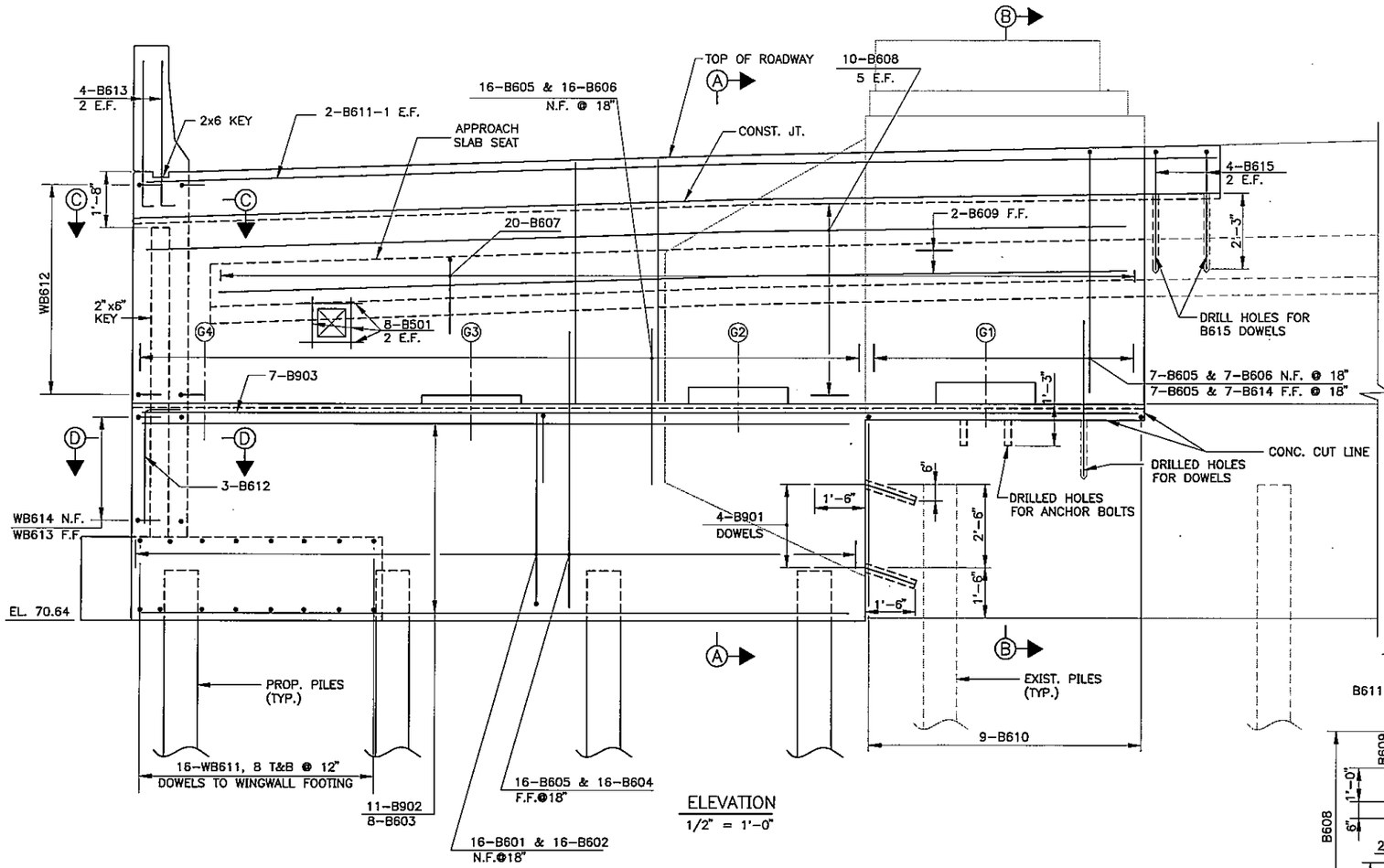

ELEVATION
1/2" = 1'-0"

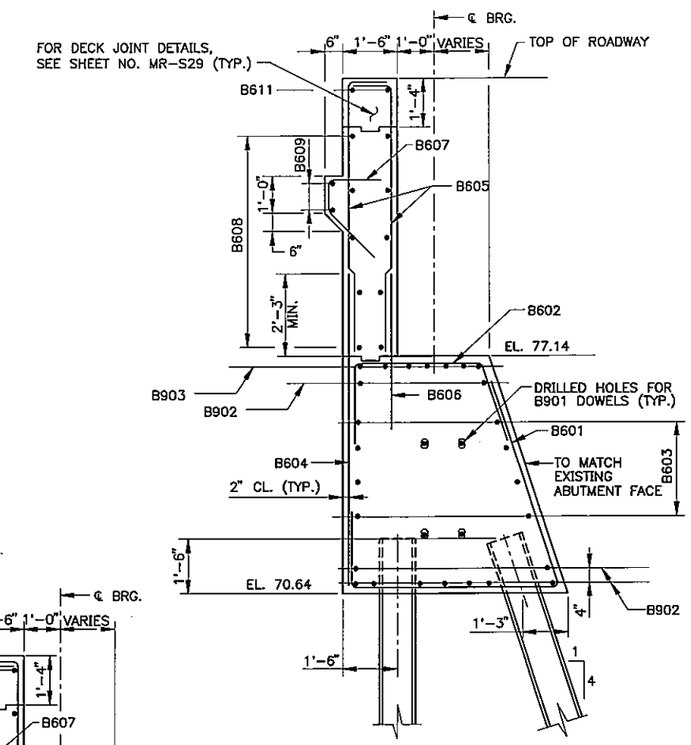

SECTION A-A
1/2" = 1'-0"

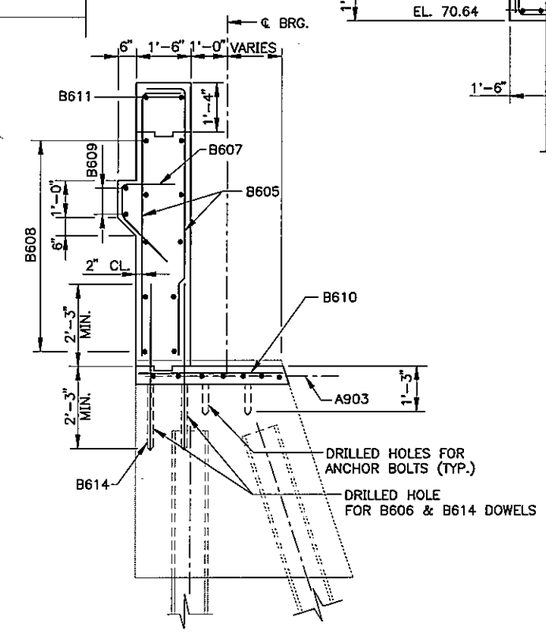

SECTION B-B
1/2" = 1'-0"

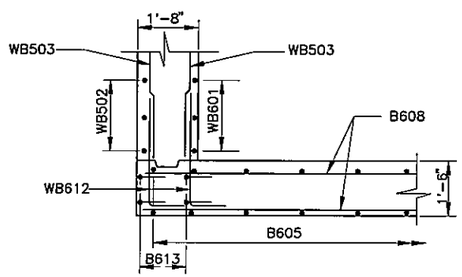

SECTION C-C
1/2" = 1'-0"

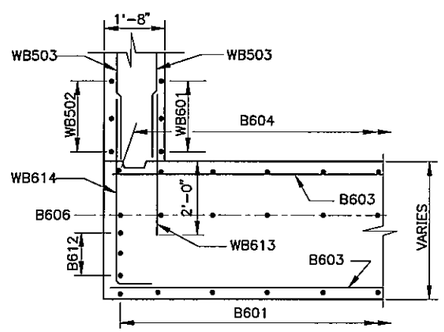

SECTION D-D
1/2" = 1'-0"

Scale:

No.	Revision	By	Date

Designed by:

HNTB
ARCHITECTS ENGINEERS PLANNERS

	By	Date		By	Date
Designed	CC	12/00	Checked	JRB	12/00
Drawn	LS	12/00	In Charge of	RAL	12/00

HNTB CORPORATION
2 Thomas Drive
Westbrook, ME 04092
TEL (207) 774-5155
FAX (207) 772-7410

MAINE TURNPIKE AUTHORITY
MODERNIZATION AND WIDENING PROJECT

THINKING AHEAD The Widening

MAINLINE BRIDGE WIDENING
MOUSAM RIVER OVERPASS
NORTH ABUTMENT REINFORCEMENT

SHEET NUMBER: MR-S10
XX OF XXX

CONTRACT: 2001.05

M:\09009\002\123\S1NREMR.DWG 12/29/00 10:13

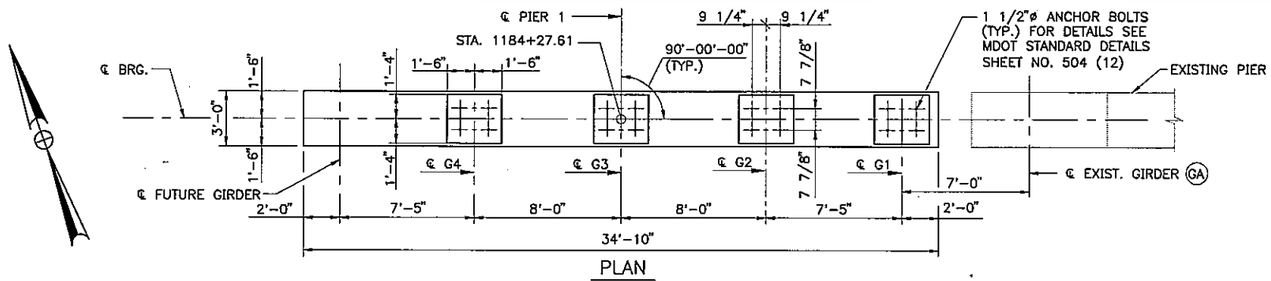

PLAN
1/4" = 1'-0"

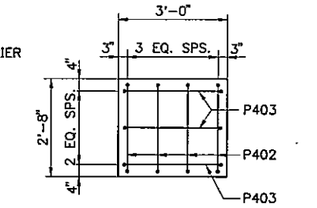

PLAN – BEARING PEDESTAL
1/2" = 1'-0"

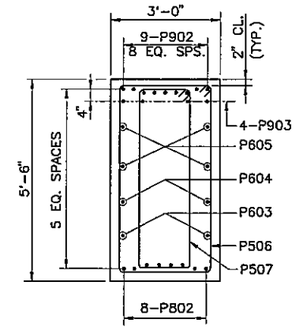

SECTION A–A
1/2" = 1'-0"

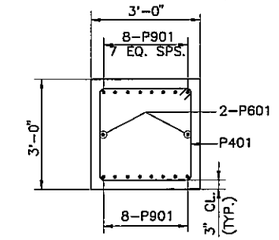

SECTION B–B
1/2" = 1'-0"

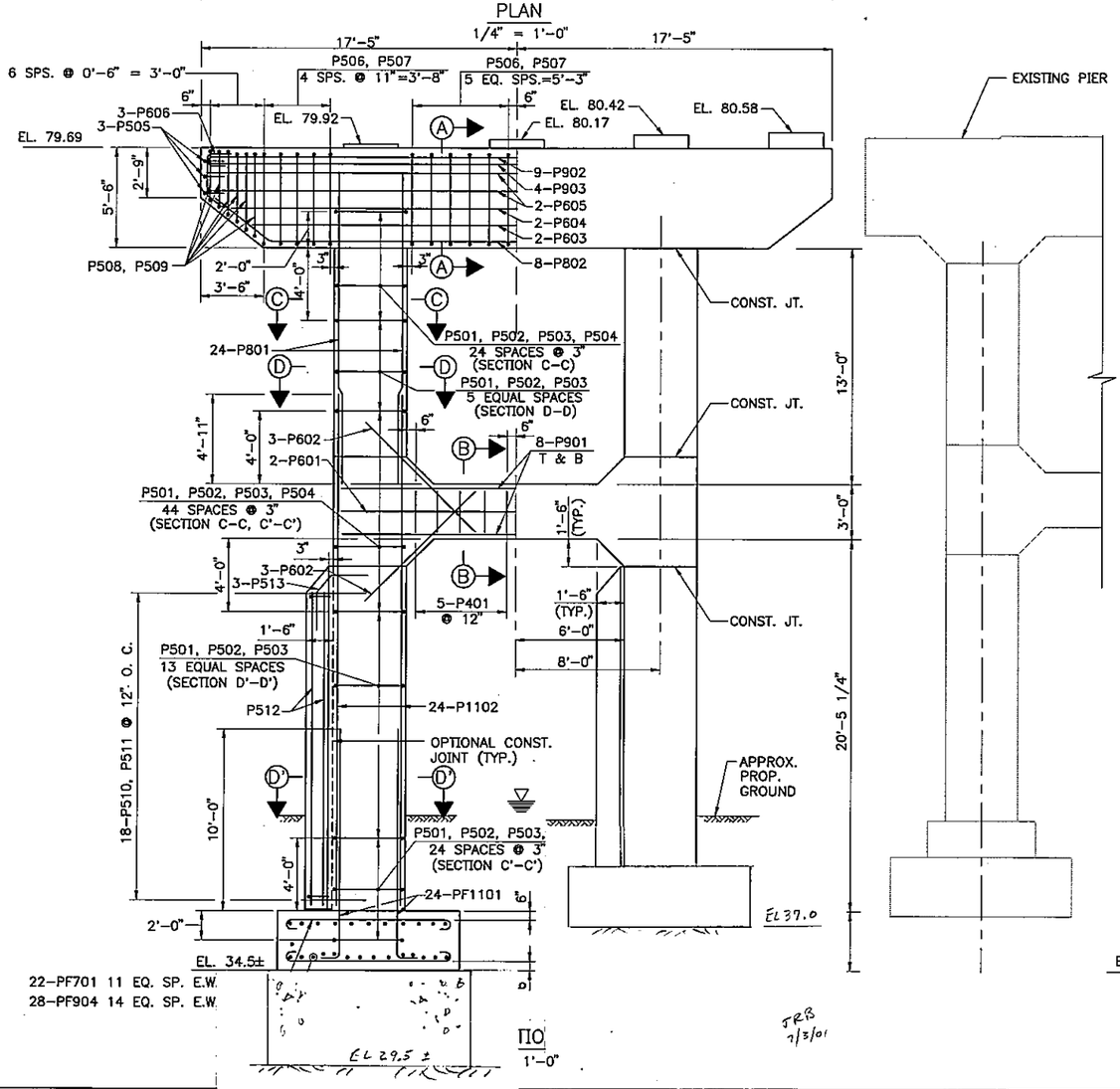

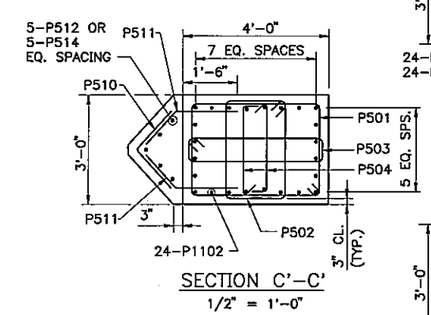

SECTION C'–C'
1/2" = 1'-0"

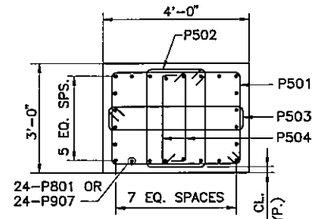

SECTION C–C
1/2" = 1'-0"

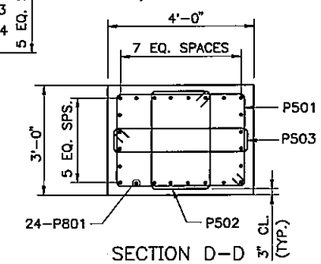

SECTION D–D
1/2" = 1'-0"

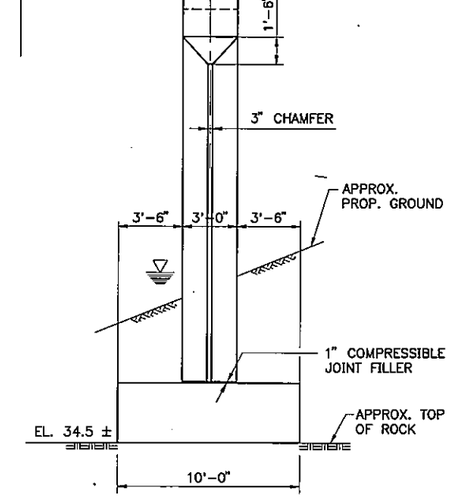

SIDE VIEW
(LOOKING EAST–DOWNSTREAM)
1/4" = 1'-0"

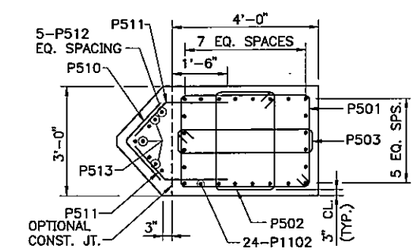

SECTION D'–D'
1/2" = 1'-0"

NOTES

1. CHAMFER ALL EXPOSED EDGES 3/4".
2. REINFORCING STEEL SHALL HAVE 3" MINIMUM COVER UNLESS OTHERWISE NOTED.
3. PLACE REINFORCING STEEL ON BRIDGE SEATS TO CLEAR ANCHOR BOLTS.
4. SPLICE BARS IN COLUMN NOT SHOWN FOR CLARITY.
5. FOR LIMITS OF CLEAR PROTECTIVE COATING FOR CONCRETE SURFACE, SEE SHEET NO. MR–S12.

Scale: AS NOTED

No.	Revision	By	Date

LANNERS

	By	Date		By	Date
Designed	AAD	12/00	Checked	JRB	12/00
Drawn	LS	12/00	In Charge of	RAL	12/00

HNTB CORPORATION
2 Thomas Drive
Westbrook, ME 04092
TEL (207) 774-5155
FAX (207) 772-7410

MAINE TURNPIKE AUTHORITY
MODERNIZATION AND WIDENING PROJECT

THINKING AHEAD The Widening

MAINLINE BRIDGE WIDENING
MOUSAM RIVER OVERPASS
PIER 1

SHEET NUMBER: MR–S11
XX OF XX

CONTRACT: 2001.05

M:\09009\002\123\S5PIER1MR.DWG 12/15/00 11:50

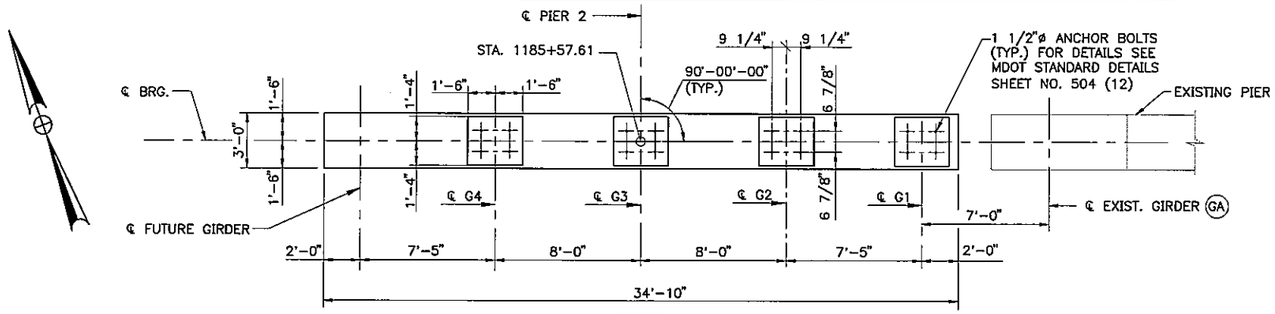

PLAN
1/4" = 1'-0"

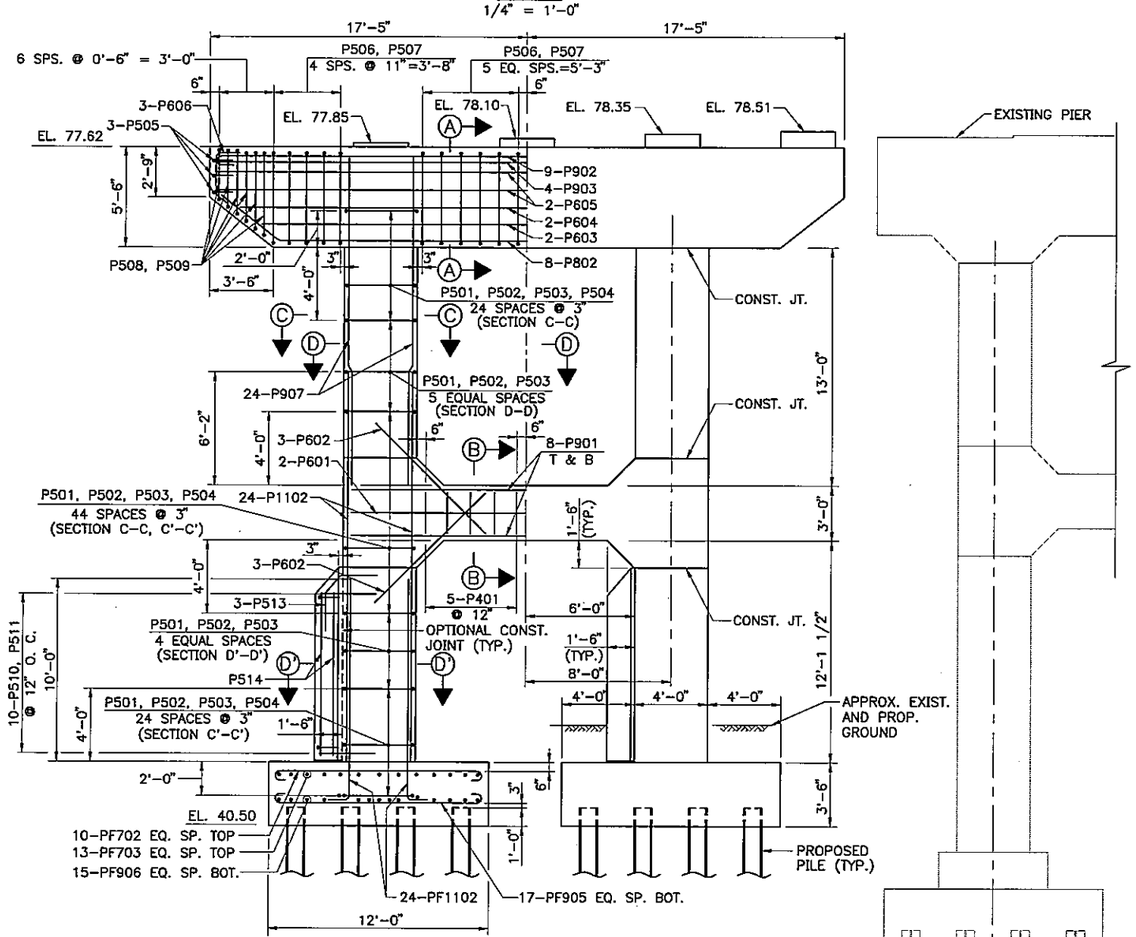

ELEVATION
1/4" = 1'-0"

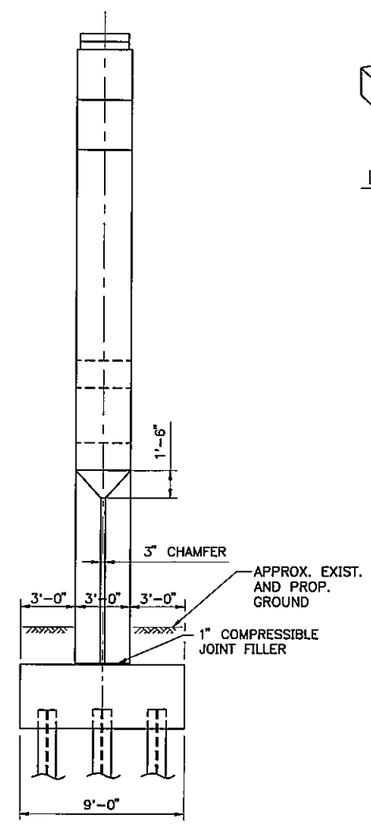

SIDE VIEW
1/4" = 1'-0"

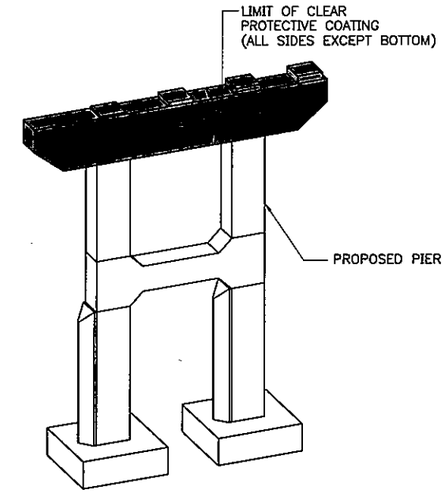

LIMIT OF CLEAR PROTECTIVE COATING AT PIER CAP
NO SCALE

NOTES

1. FOR "PLAN – BEARING PEDESTAL", SECTIONS A–A, B–B, C–C, C'–C', D–D, AND D'–D', SEE SHEET NO. MR–S11.
2. CHAMFER ALL EXPOSED EDGES 3/4".
3. REINFORCING STEEL SHALL HAVE 3" MINIMUM COVER UNLESS OTHERWISE NOTED.
4. PLACE REINFORCING STEEL ON BRIDGE SEATS TO CLEAR ANCHOR BOLTS.

M:\09009\D02\123\SSPIER2MR.DWG 12/15/00 11:53

Scale: AS NOTED

No.	Revision	By	Date

Designed by:

HNTB
ARCHITECTS ENGINEERS PLANNERS

	By	Date		By	Date
Designed	AAD	12/00	Checked	JRB	12/00
Drawn	LS	12/00	In Charge of	RAL	12/00

HNTB CORPORATION
2 Thomas Drive
Westbrook, ME 04092
TEL (207) 774-5155
FAX (207) 772-7410

MAINE TURNPIKE AUTHORITY
MODERNIZATION AND WIDENING PROJECT

THINKING AHEAD The Widening

MAINLINE BRIDGE WIDENING
MOUSAM RIVER OVERPASS
PIER 2

SHEET NUMBER: MR-S12
CONTRACT: 2001.05
XX OF XX

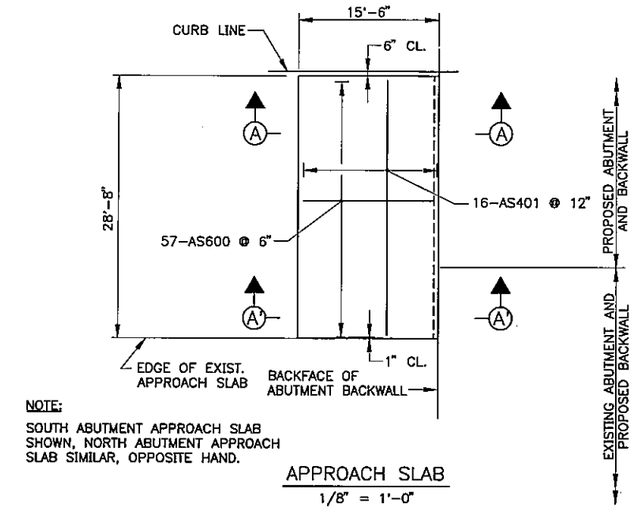

NOTE:
SOUTH ABUTMENT APPROACH SLAB SHOWN, NORTH ABUTMENT APPROACH SLAB SIMILAR, OPPOSITE HAND.

APPROACH SLAB
1/8" = 1'-0"

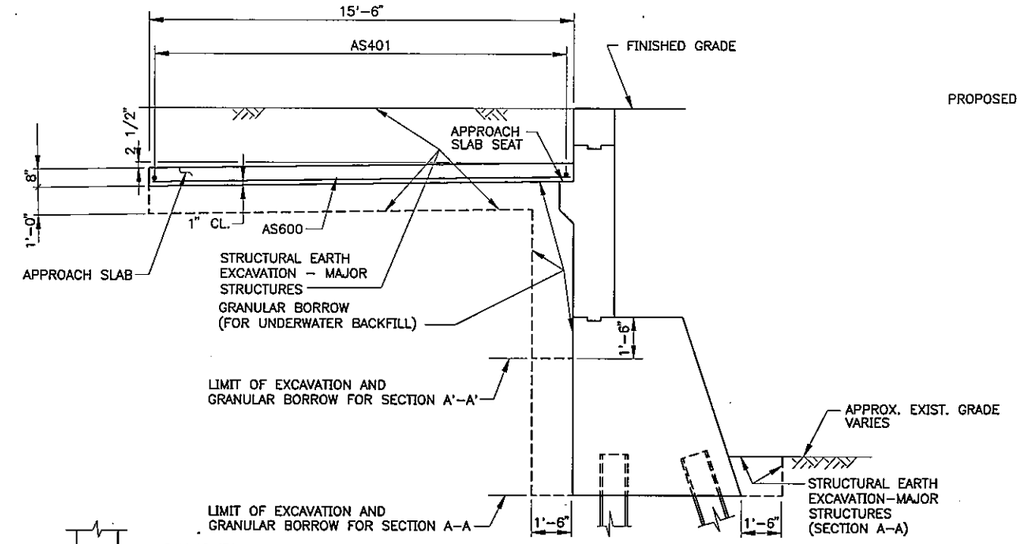

SECTION A-A
SECTION A'-A' SIMILAR
3/8" = 1'-0"

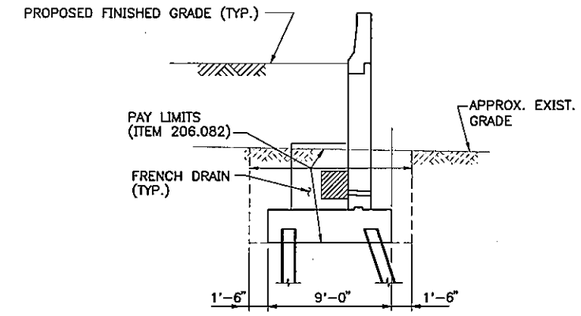

PAY LIMITS – WINGWALL
3/16" = 1'-0"

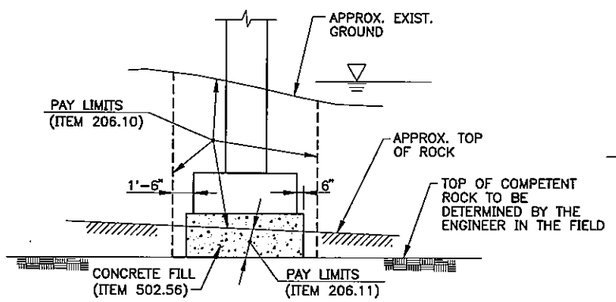

PIER 1

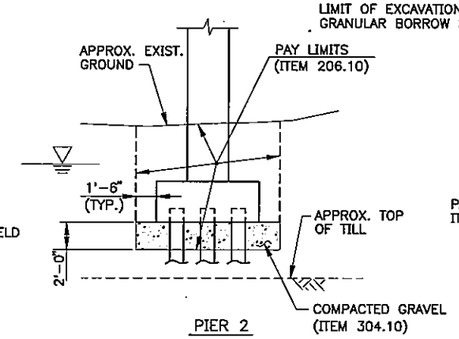

PIER 2

PAY LIMITS – PIERS
NOT TO SCALE

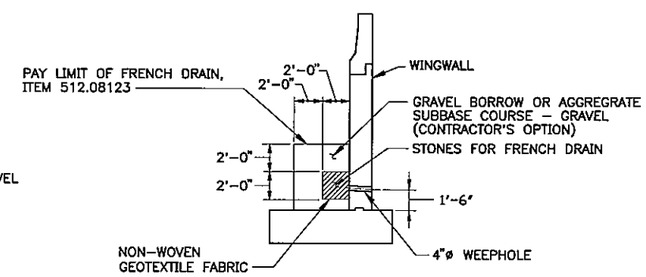

FRENCH DRAIN DETAILS
NOT TO SCALE

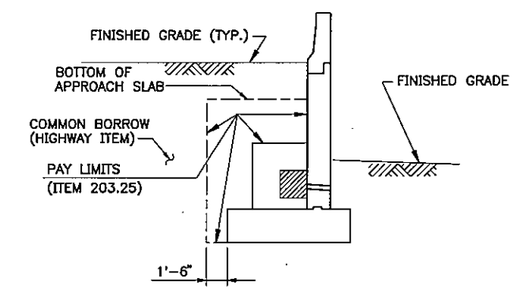

TYPICAL PAY LIMITS FOR BACKFILL
3/16" = 1'-0"

NOTE

THE FRENCH DRAIN SHALL EXTEND THE ENTIRE LENGTH OF THE WINGWALL. A POROUS GEOTEXTILE MATERIAL SHALL BE INSTALLED OVER THE WEEP HOLES ALONG THE BACKFACE OF THE WINGWALL PRIOR TO CONSTRUCTING THE FRENCH DRAIN. A NON-WOVEN GEOTEXTILE FABRIC SHALL BE PLACED AROUND THE FRENCH DRAIN STONES, SEPARATING THEM FROM THE AGGREGATE SUBBASE COURSE-GRAVEL OR GRAVEL BORROW.

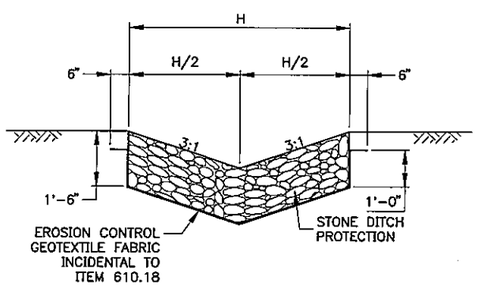

SECTION A-A
1/2 " = 1'-0"

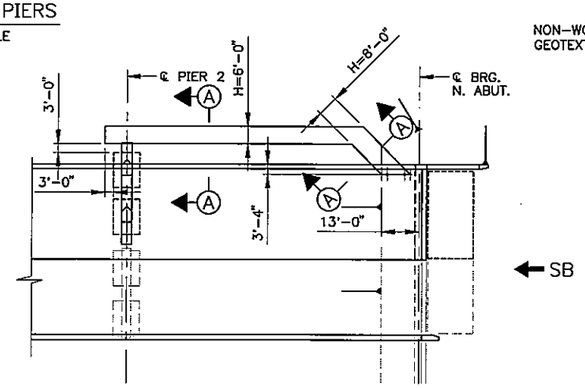

PLAN – STONE DITCH DETAIL
1" = 25'-0"

Scale: AS NOTED				Designed by: HNTB ARCHITECTS ENGINEERS PLANNERS					
No.	Revision	By	Date		By	Date		By	Date
				Designed	CC	12/00	Checked	JRB	12/00
				Drawn	LS	12/00	In Charge of	RAL	12/00

HNTB CORPORATION
2 Thomas Drive
Westbrook, ME 04092
TEL (207) 774-5155
FAX (207) 772-7410

MAINE TURNPIKE AUTHORITY
MODERNIZATION AND WIDENING PROJECT

THINKING AHEAD The Widening

MAINLINE BRIDGE WIDENING
MOUSAM RIVER OVERPASS
MISCELLANEOUS SUBSTRUCTURE DETAILS

CONTRACT: 2001.05

SHEET NUMBER: MR-S13
XX OF XX

M:\09009\002\123\S5MISCMR.DWG 12/15/00 12:05

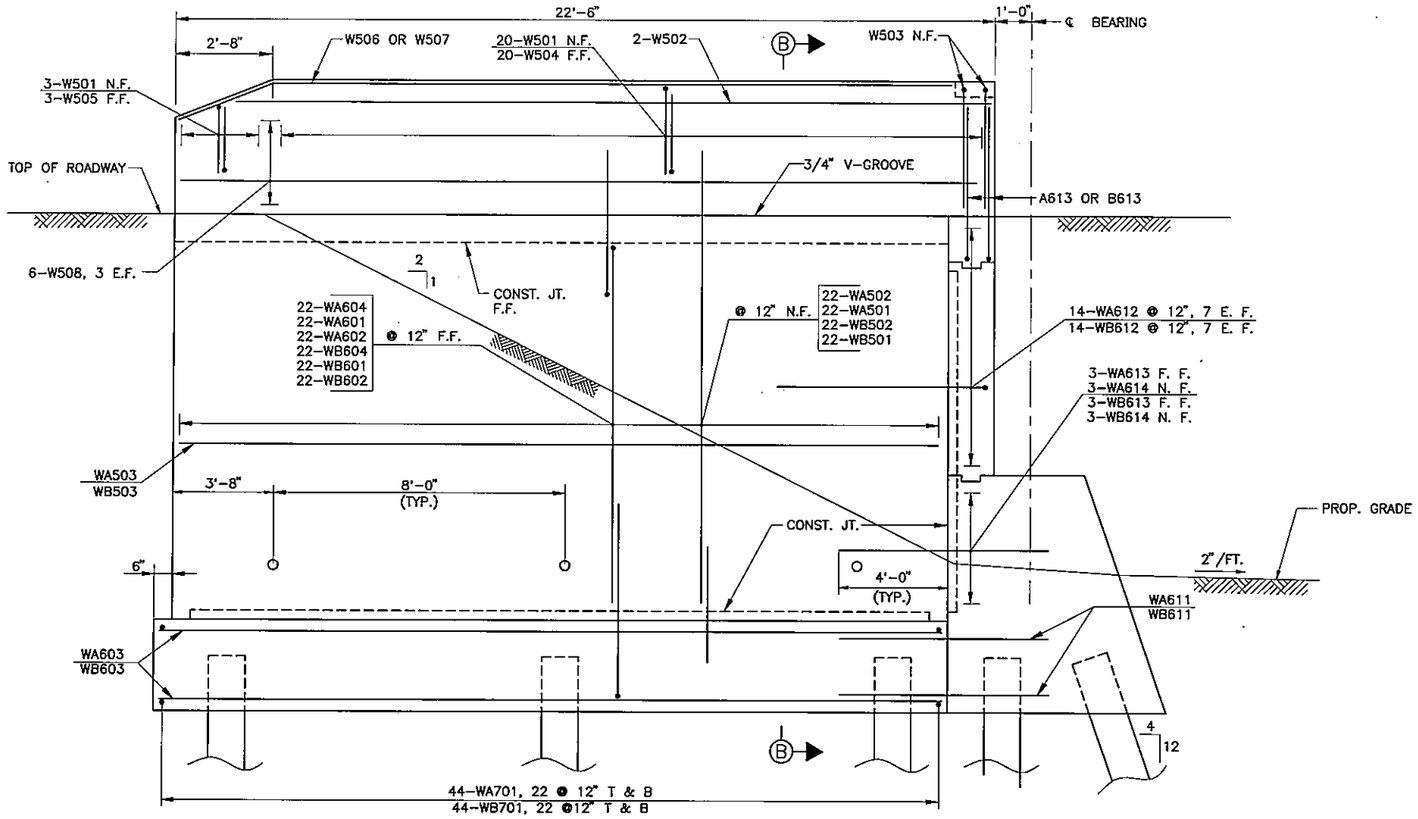

WINGWALL ELEVATION

NW WINGWALL SHOWN
SW WINGWALL SIMILAR
1/2" = 1'-0"

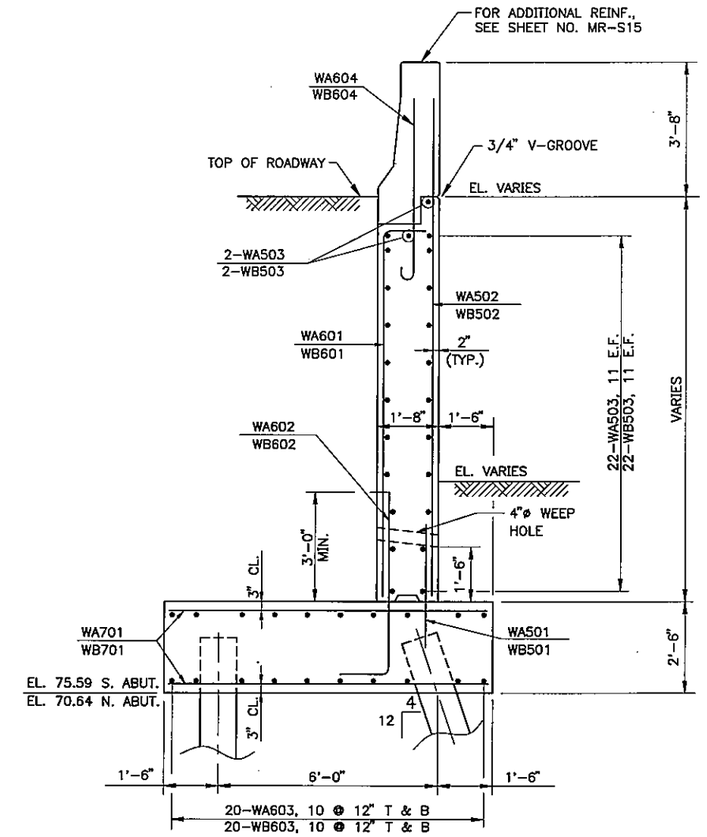

SECTION B-B

1/2" = 1'-0"

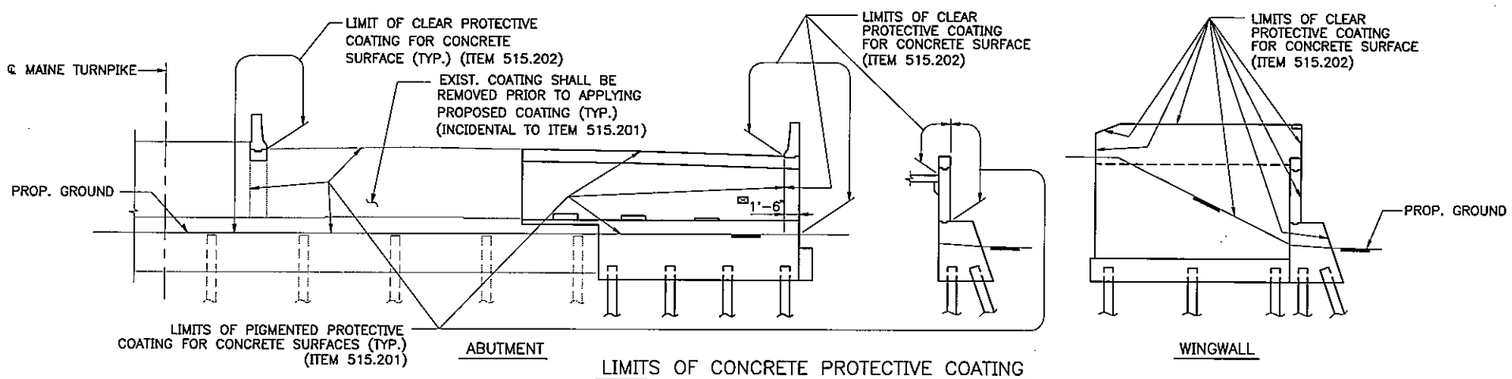

LIMITS OF CONCRETE PROTECTIVE COATING AT ABUTMENTS AND WINGWALLS

NOT TO SCALE

NOTES

1. FOR NOTES, SEE SHEET NO. MR-S7.
2. FOR EMBANKMENT CONSTRUCTION REQUIREMENTS, REFER TO CIVIL DRAWINGS.

Scale: AS NOTED

No.	Revision	By	Date

Designed by:

HNTB
ARCHITECTS ENGINEERS PLANNERS

	By	Date		By	Date
Designed	JRB	12/00	Checked	CC	12/00
Drawn	LS	12/00	In Charge of	RAL	12/00

HNTB CORPORATION
2 Thomas Drive
Westbrook, ME 04092
TEL (207) 774-5155
FAX (207) 772-7410

MAINE TURNPIKE AUTHORITY
MODERNIZATION AND WIDENING PROJECT

THINKING AHEAD The Widening

MAINLINE BRIDGE WIDENING
MOUSAM RIVER OVERPASS
WINGWALL DETAILS I

SHEET NUMBER: MR-S14
XX OF XXX

CONTRACT: 2001.05

M:\09009\002\123\S5WING1MR.DWG 12/26/00 10:45

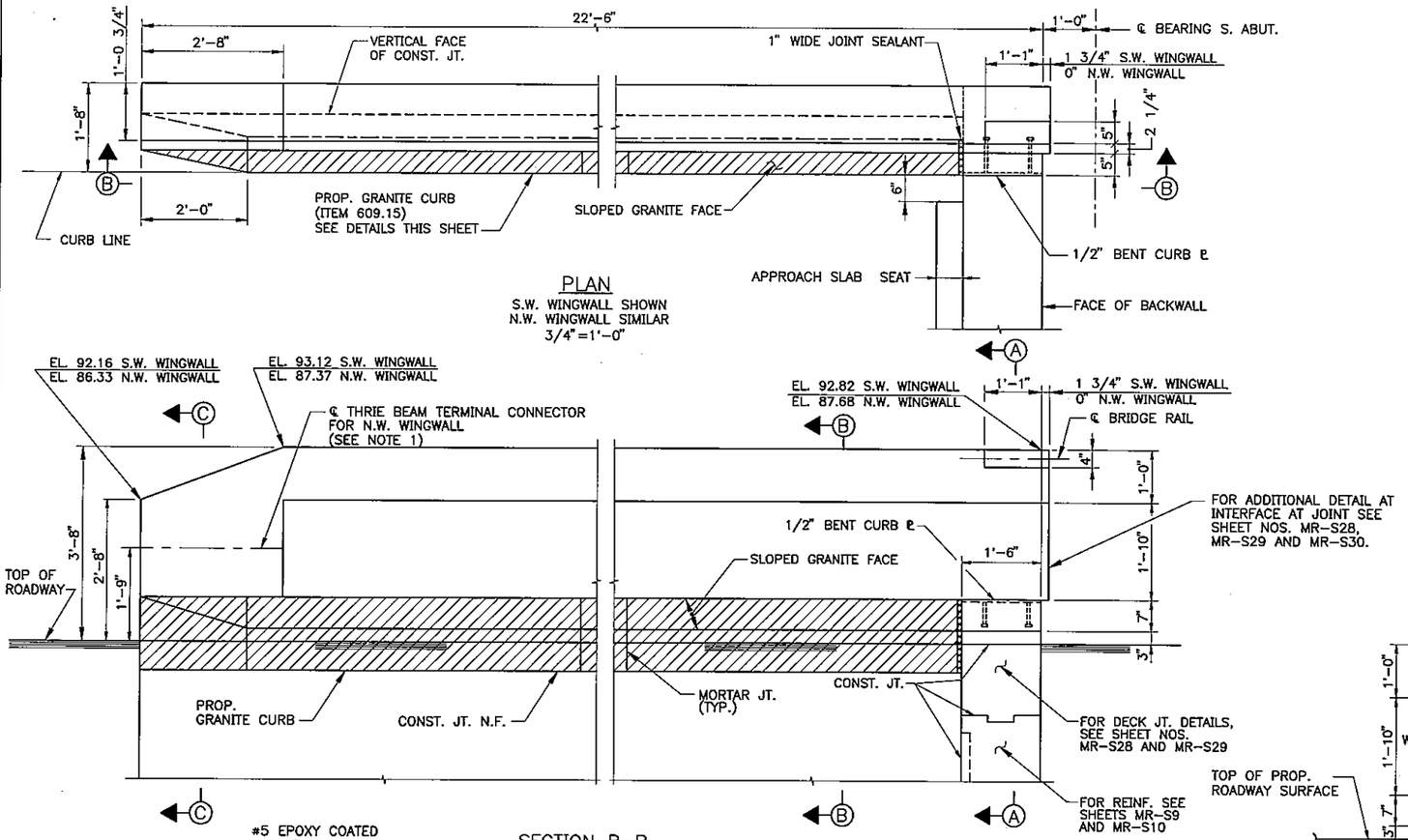

PLAN
S.W. WINGWALL SHOWN
N.W. WINGWALL SIMILAR
3/4"=1'-0"

SECTION B-B
3/4"=1'-0"

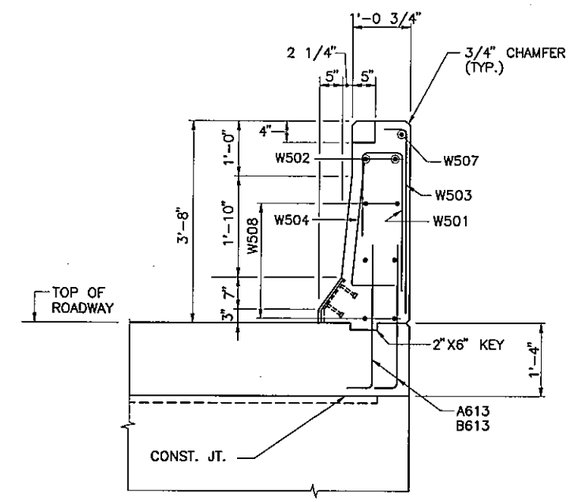

SECTION A-A
3/4"=1'-0"

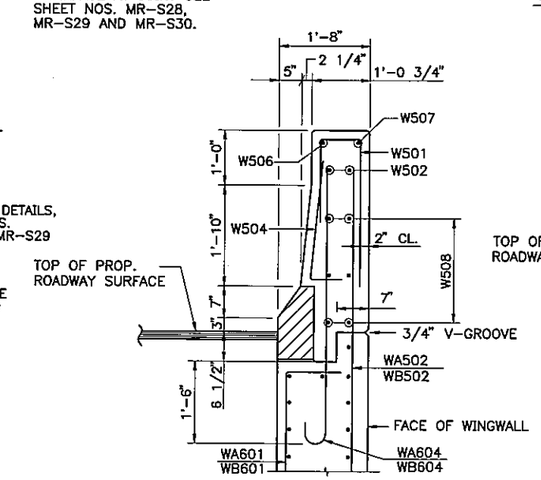

SECTION B-B
3/4"=1'-0"

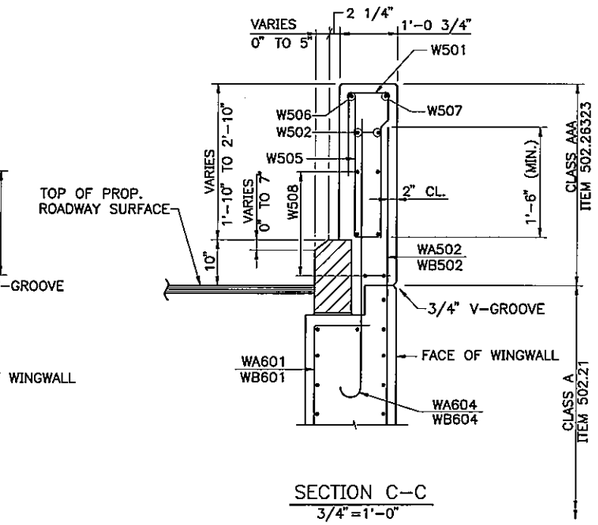

SECTION C-C
3/4"=1'-0"

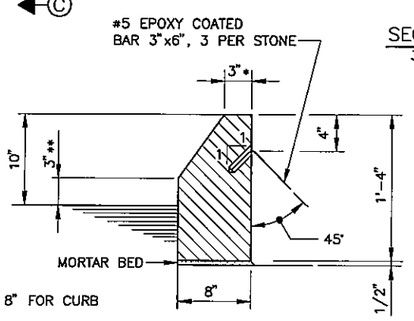

*VARIES 3" TO 8" FOR CURB PIECE AT END
**VARIES 3" TO 10" FOR CURB PIECE AT END

TYPICAL SECTION
1 1/2"=1'-0"

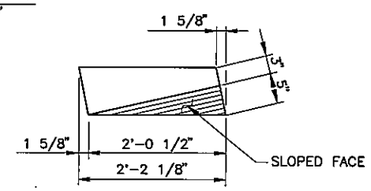

PLAN

CURB PIECE AT END OF END POST
1"=1'-0"

GRANITE CURB DETAILS

NOTES

1. FOR TERMINAL CONNECTOR ANCHORAGE DETAIL, SEE SHEET NO. MD-C1.
2. DECK JOINT STEEL NOT SHOWN FOR CLARITY.

M:\09009\002\123\SSWING2MR.DWG 12/15/00 13:11

Scale: AS NOTED

No.	Revision	By	Date

Designed by:

HNTB
ARCHITECTS ENGINEERS PLANNERS

	By	Date		By	Date
Designed	JRB	12/00	Checked	CC	12/00
Drawn	LS	12/00	In Charge of	RAL	12/00

HNTB CORPORATION
2 Thomas Drive
Westbrook, ME 04092
TEL (207) 774-5155
FAX (207) 772-7410

MAINE TURNPIKE AUTHORITY
MODERNIZATION AND WIDENING PROJECT

THINKING AHEAD The Widening

MAINLINE BRIDGE WIDENING
MOUSAM RIVER OVERPASS
WINGWALL DETAILS II

SHEET NUMBER: MR-S15
XX OF XXX

CONTRACT: 2001.05

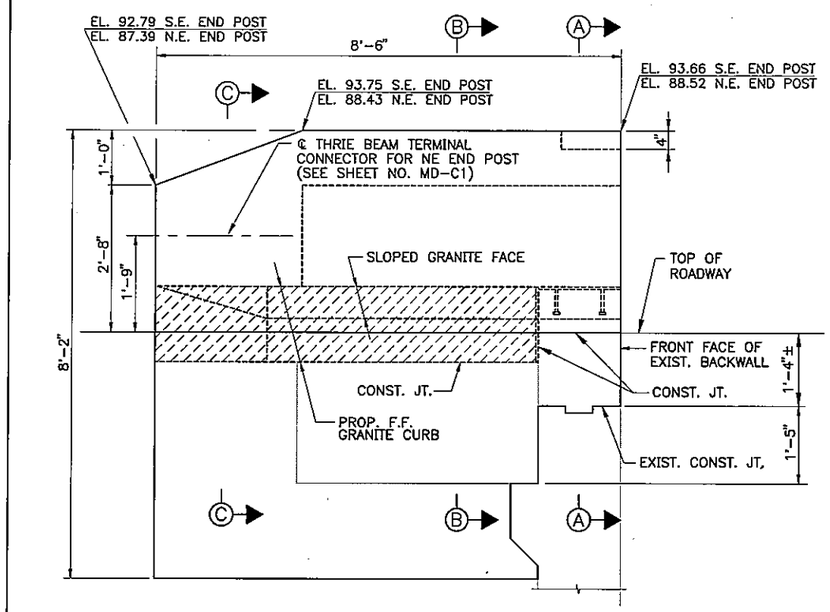

ELEVATION

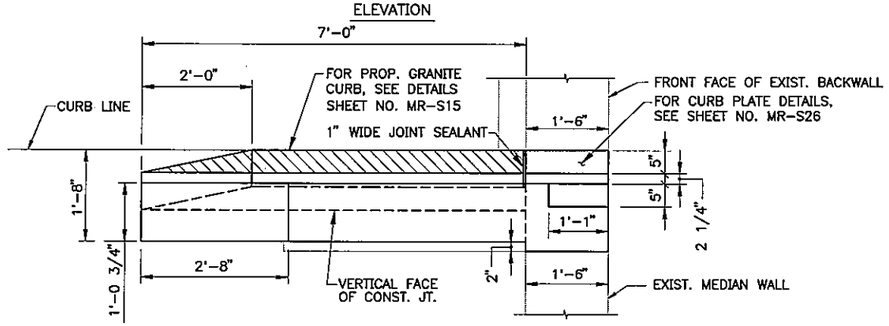

PLAN

END POST GEOMETRY

SE END POST SHOWN. NE END POST OPPOSITE HAND.
3/4"=1'-0"

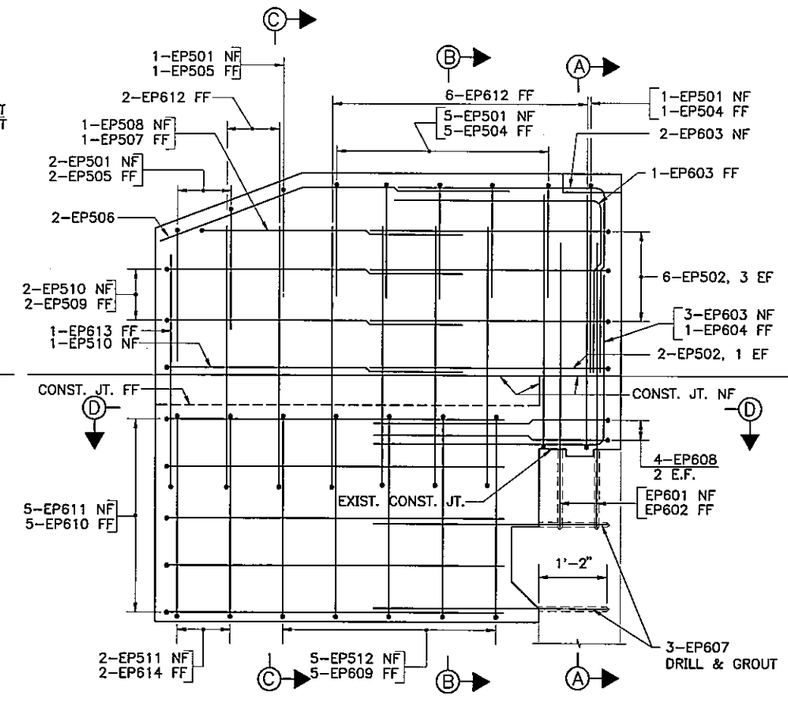

ELEVATION

END POST REINFORCING DETAIL

(SE END POST SHOWN. NE END POST OPPOSITE HAND)
3/4"=1'-0"

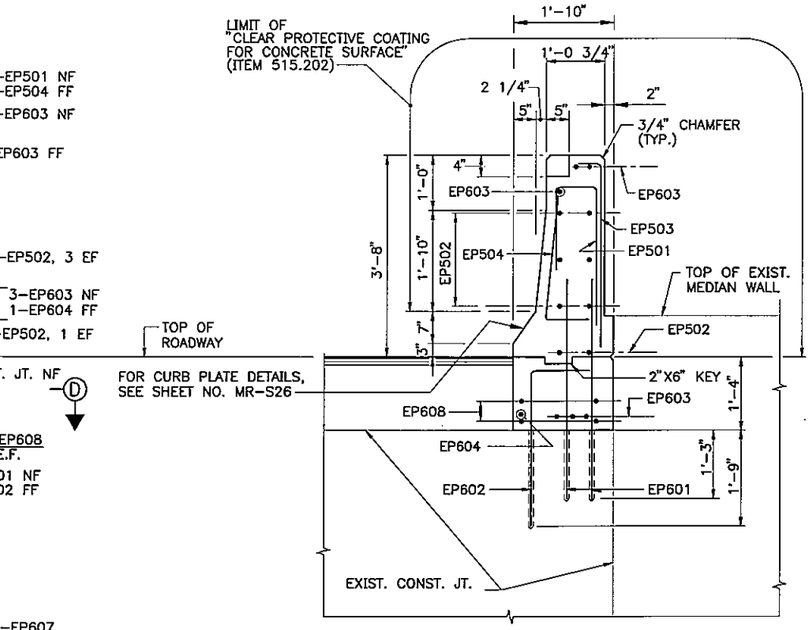

SECTION A-A
3/4"=1'-0"

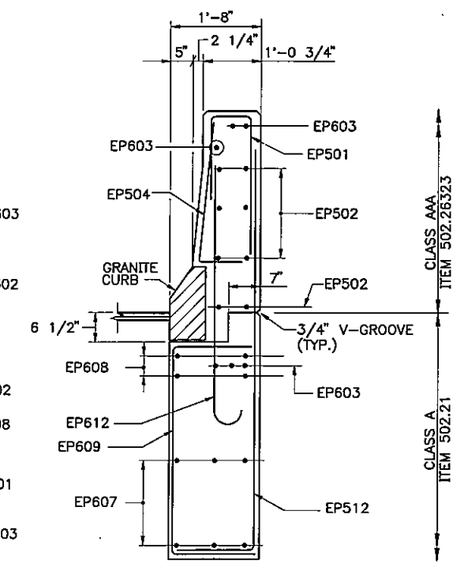

SECTION B-B
3/4"=1'-0"

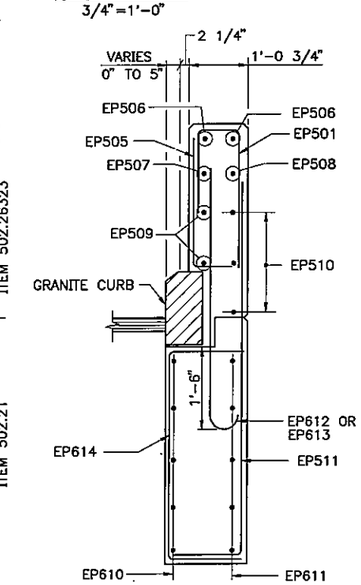

SECTION C-C
3/4"=1'-0"

NOTES

1. EXPANSION JOINT STEEL NOT SHOWN FOR CLARITY PURPOSES.
2. THE EXISTING BACKWALL SURFACE, AT THE INTERFACE OF THE END POST FOOTING, SHALL BE CLEAN AND FREE OF BOND INHIBITING MATERIALS. THE SURFACE SHALL BE ROUGHENED AND THEN A BONDING AGENT, APPROVED OF BY THE ENGINEER, SHALL BE APPLIED PRIOR TO THE NEW CONCRETE FOOTING PLACEMENT. PAYMENT SHALL BE INCIDENTAL TO ITEM 502.21.

M:\09009\002\123\S5EP1MR.DWG 12/22/00 10:28

Scale:AS NOTED

No.	Revision	By	Date

Designed by:

HNTB
ARCHITECTS ENGINEERS PLANNERS

	By	Date		By	Date
Designed	CC	12/00	Checked	JRB	12/00
Drawn	LS	12/00	In Charge of	RAL	12/00

HNTB CORPORATION
2 Thomas Drive
Westbrook, ME 04092
TEL (207) 774-5155
FAX (207) 772-7410

MAINE TURNPIKE AUTHORITY
MODERNIZATION AND WIDENING PROJECT

THINKING AHEAD The Widening

MAINLINE BRIDGE WIDENING
MOUSAM RIVER OVERPASS
END POST MODIFICATIONS

SHEET NUMBER: MR-S16
XX OF XXX

CONTRACT: 2001.05

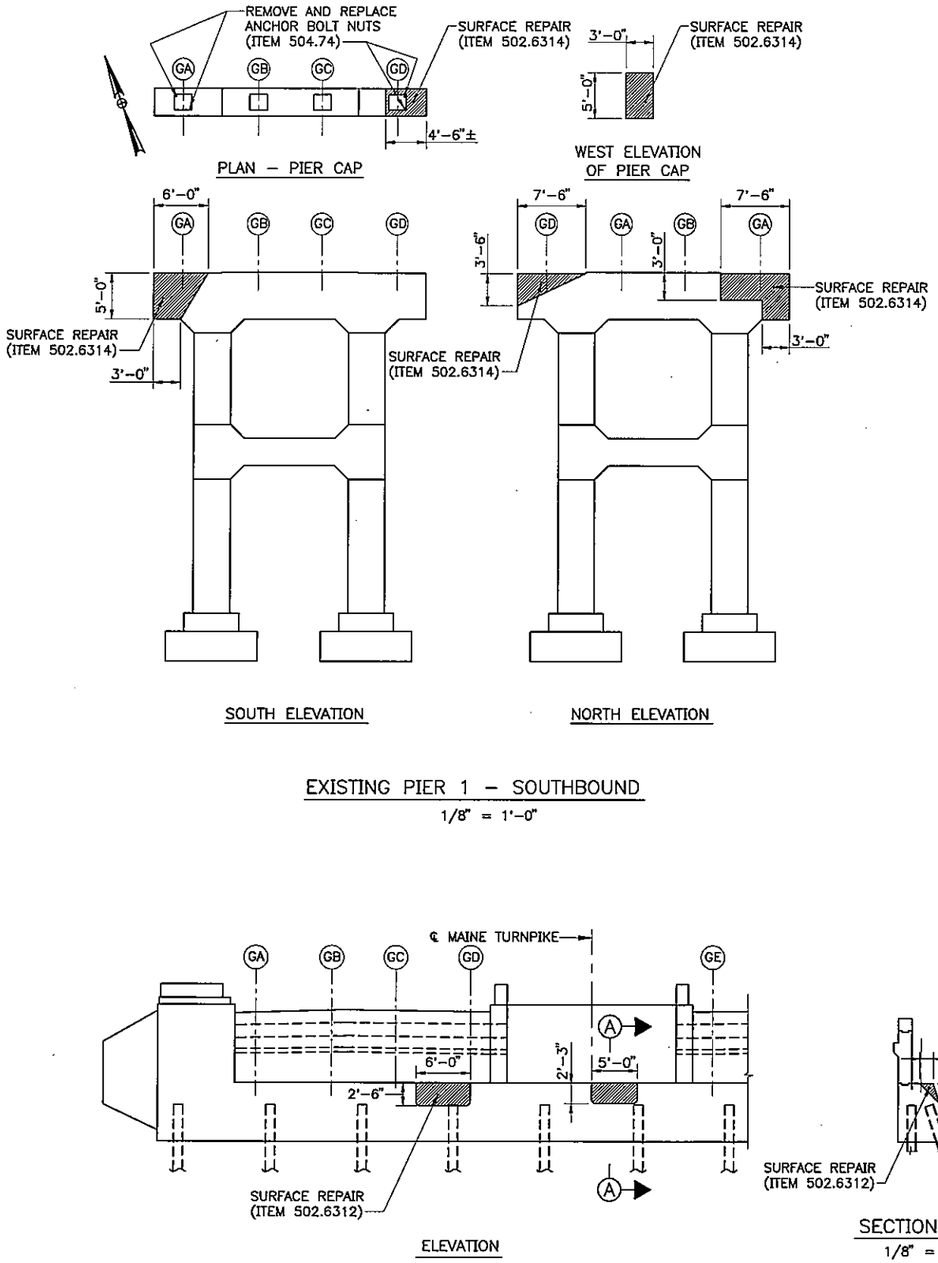

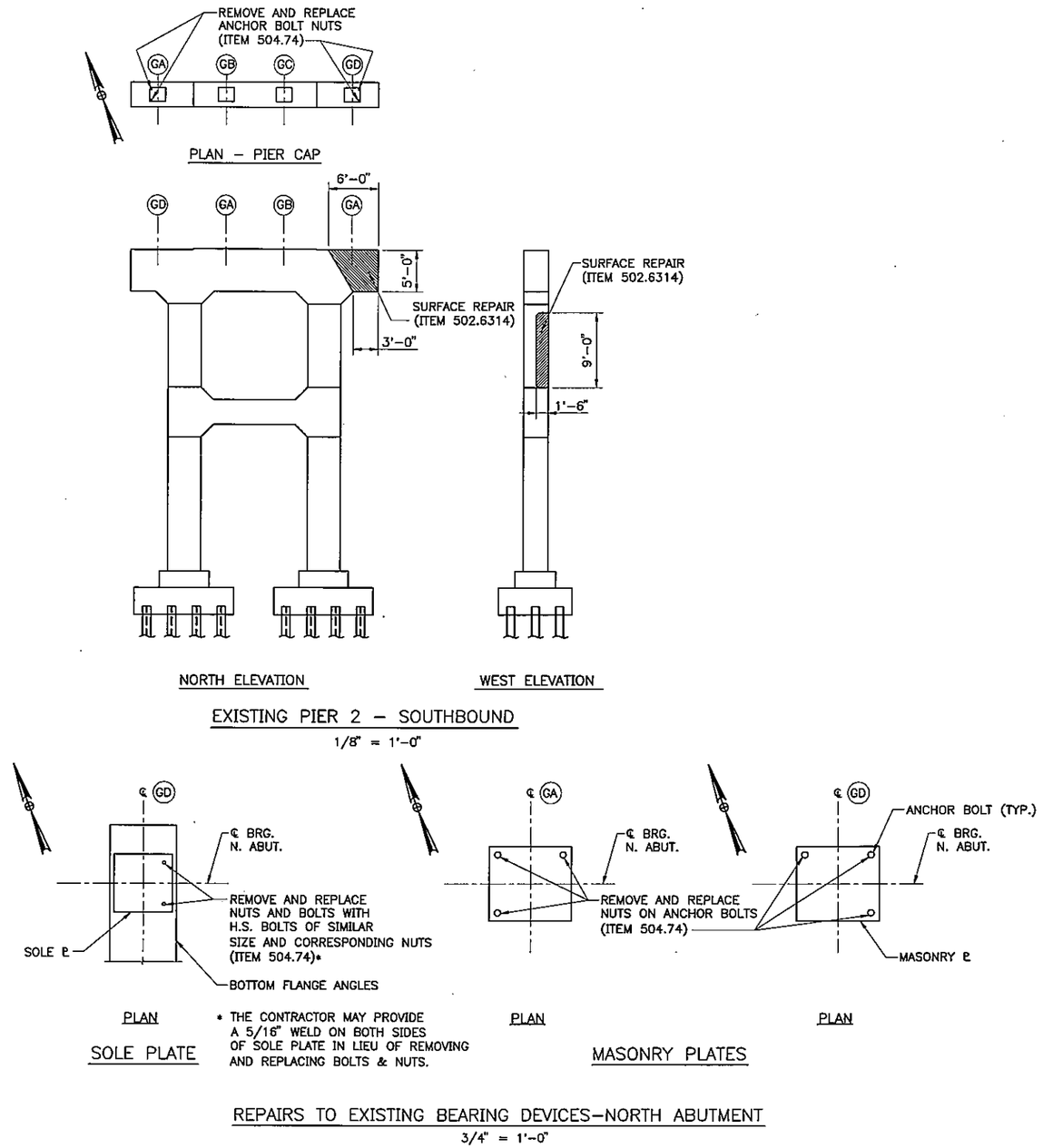

M:\09009\002\123\S5REPMR.DWG 12/22/00 10:47

Scale:AS NOTED

No.	Revision	By	Date

Designed by:

HNTB
ARCHITECTS ENGINEERS PLANNERS

	By	Date		By	Date
Designed	CC	12/00	Checked	JRB	12/00
Drawn	LS	12/00	In Charge of	RAL	12/00

HNTB CORPORATION
2 Thomas Drive
Westbrook, ME 04092
TEL (207) 774-5155
FAX (207) 772-7410

MAINE TURNPIKE AUTHORITY
MODERNIZATION AND WIDENING PROJECT

THINKING AHEAD The Widening

MAINLINE BRIDGE WIDENING
MOUSAM RIVER OVERPASS
EXISTING BRIDGE REPAIRS

SHEET NUMBER: MR-S17
XX OF XXX

CONTRACT: 2001.05

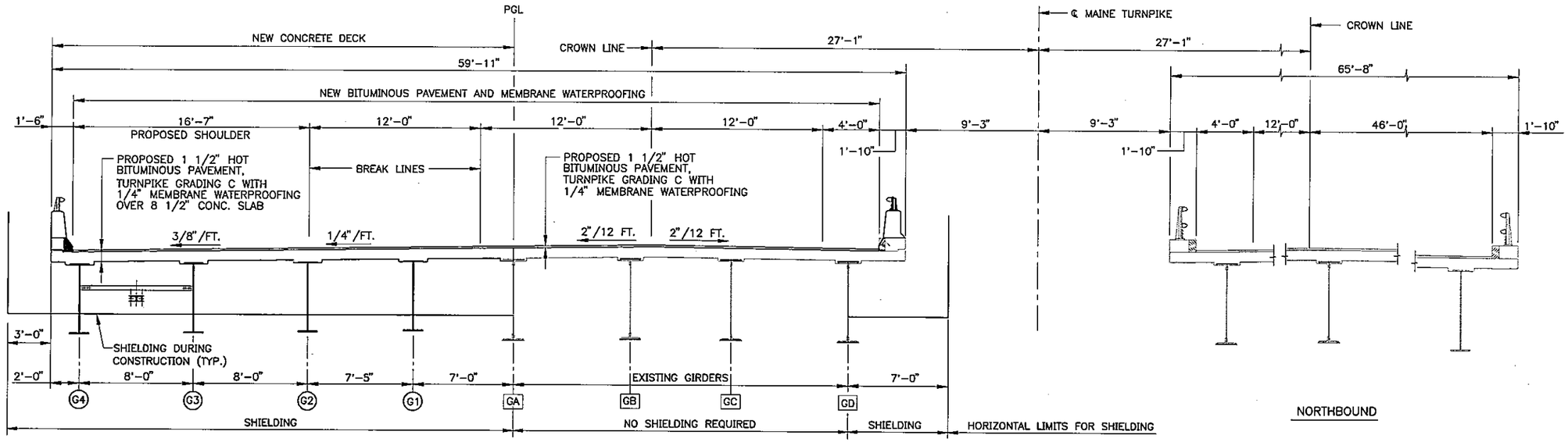

PROPOSED CROSS SECTION
1/4" = 1'-0"

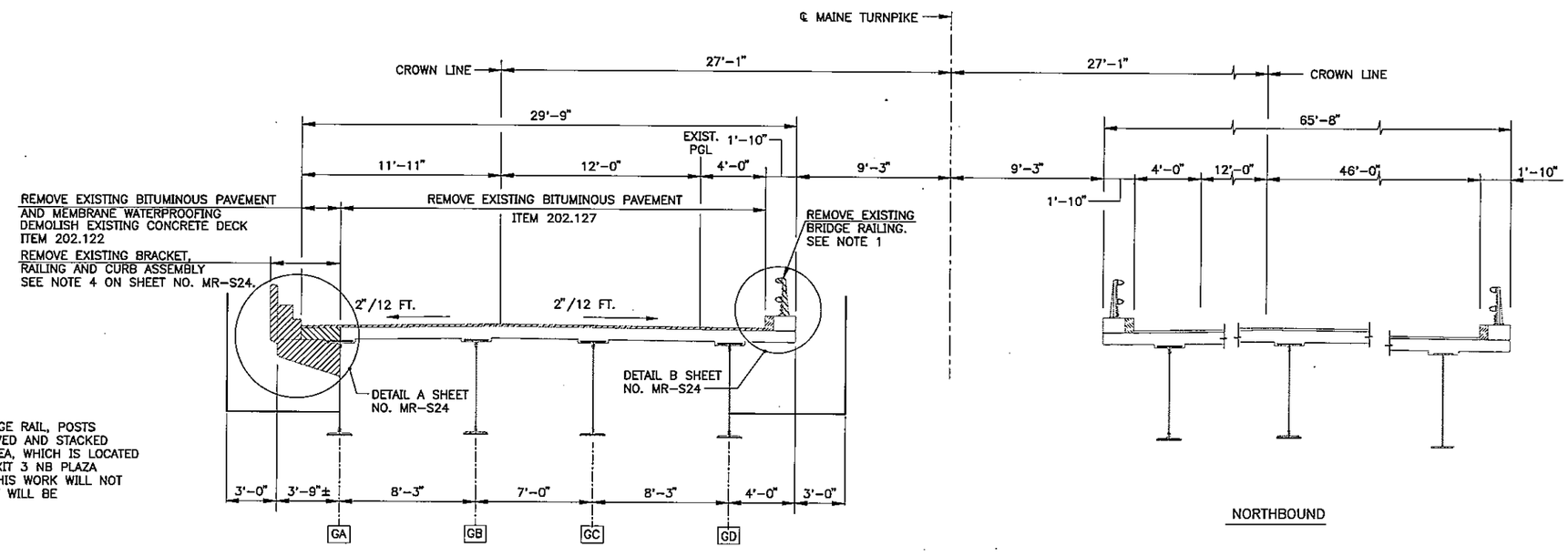

NOTE

1. EXISTING 2-BAR ALUMINUM BRIDGE RAIL, POSTS AND HARDWARE SHALL BE REMOVED AND STACKED AT KENNEBUNK MAINTENANCE AREA, WHICH IS LOCATED AT THE INTERSECTION OF THE EXIT 3 NB PLAZA ACCESS ROAD AND ROUTE 35. THIS WORK WILL NOT BE MEASURED FOR PAYMENT BUT WILL BE INCIDENTAL TO ITEM 202.122.

EXISTING CROSS SECTION
1/4" = 1'-0"

M:\09009\002\123\S3SEQ1MR.DWG 12/26/00 14:27

Scale:AS NOTED

No.	Revision	By	Date

Designed by:

HNTB
ARCHITECTS ENGINEERS PLANNERS

	By	Date		By	Date
Designed	CC	12/00	Checked	JRB	12/00
Drawn	LS	12/00	In Charge of	RAL	12/00

HNTB CORPORATION
2 Thomas Drive
Westbrook, ME 04092
TEL (207) 774-5155
FAX (207) 772-7410

MAINE TURNPIKE AUTHORITY
MODERNIZATION AND WIDENING PROJECT

THINKING AHEAD The Widening

MAINLINE BRIDGE WIDENING
MOUSAM RIVER OVERPASS
DECK CONSTRUCTION SEQUENCE

CONTRACT: 2001.05

SHEET NUMBER: MR-S18
XX OF XXX

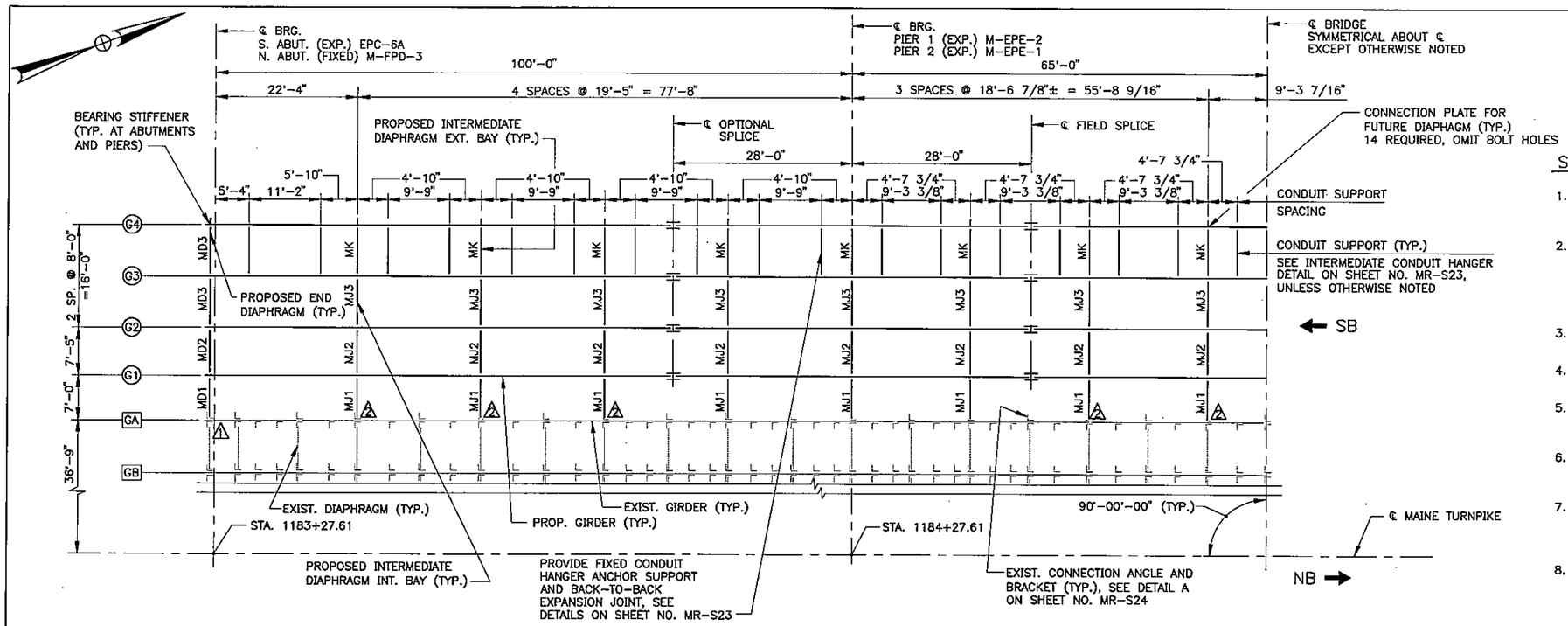

FRAMING PLAN
1"=10'

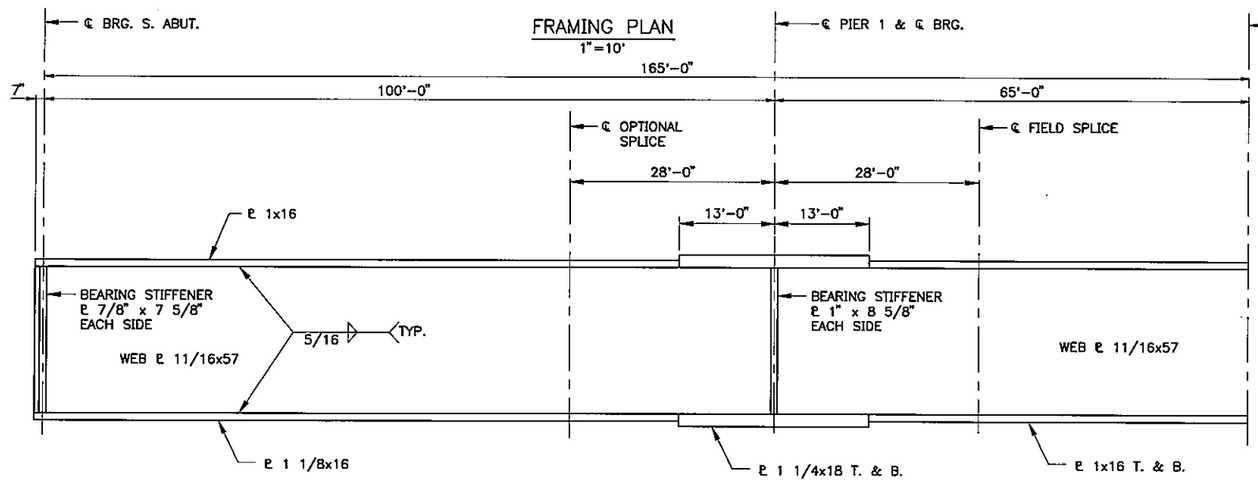

TYPICAL GIRDER ELEVATION*
NO SCALE

* GIRDERS G1, G2, G3 & G4

DIAPHRAGM NOTE:

THE INTENT OF THE DIAPHRAGM SPACING SHOWN IS TO MATCH THE CONNECTION PLATES ON THE EXISTING GIRDERS. BEFORE FABRICATION THE CONTRACTOR SHALL VERIFY THE ACTUAL LOCATION OF THE EXISTING CONNECTION PLATES BY FIELD MEASURING.

STRUCTURAL STEEL NOTES

1. CAMBER ORDINATES, AS SHOWN, ARE COMPUTED TO COMPENSATE FOR ALL DEAD LOAD DEFLECTIONS AND THE EFFECT OF VERTICAL CURVATURE.
2. NO TRANSVERSE BUTT WELD SPLICES WILL BE ALLOWED IN THE FLANGE OR WEB PLATES WITHIN 10' FROM THE POINTS OF MAXIMUM NEGATIVE OR MAXIMUM POSITIVE MOMENT. BUTT WELD SPLICES IN FLANGES SHALL NOT BE LESS THAN ONE FOOT FROM TRANSVERSE BUTT WELDS IN THE WEB PLATE OR CONNECTION PLATE TO WEB WELDS.
3. BUTT WELDS AT WEB SPLICES AND FLANGE SPLICES SHALL BE GROUND FLUSH IN LONGITUDINAL DIRECTION OF GIRDER.
4. BEARING STIFFENERS SHALL BE PLUMB AFTER ERECTION AND DEAD LOADING OF THE STRUCTURE.
5. CROSSFRAME OR DIAPHRAGM CONNECTION PLATES MAY BE EITHER PLUMB OR NORMAL TO THE TOP FLANGE FOR THE ENTIRE BRIDGE.
6. FILLER PLATES SHALL CONFORM TO AASHTO M270, GRADE 36. MILL TESTS FOR FILLER PLATE MATERIAL WILL NOT BE REQUIRED.
7. FOR DETAILS OF DIAPHRAGM AND CROSSFRAME TYPES MD2, MD3, MJ2, MJ3 AND MK, SEE MDOT STANDARD DETAILS, SECTION 504. FOR TYPE MD1 AND MJ1 SEE SHEET NO. MR-S21. SEE NOTE 3 ON SHEET NO. MR-S2.
8. BEARINGS AND WELDED GIRDERS: FLANGES, WEBS, SPLICE PLATES AND BEARING STIFFENERS SHALL BE AASHTO M270, GRADE 50. BOLTS SHALL BE AASHTO M164. ALL OTHER STRUCTURAL STEEL SHALL BE AASHTO M270, GRADE 36.
9. ALL FLANGE AND WEB PLATES SHALL BE DESIGNATED "CVN" WITH THE MATERIAL MEETING SPECIFIED MINIMUM NOTCH TOUGHNESS REQUIREMENTS IN ACCORDANCE WITH AASHTO SPECIFICATIONS (TEMPERATURE ZONE 2 DESIGNATION).
10. FOR TENSION FLANGE CONNECTION DETAIL FOR DIAPHRAGMS AND CROSSFRAMES, SEE MDOT STANDARD DETAILS, PAGE 504(21). SEE NOTE 3 ON SHEET NO. MR-S2.
11. UTILITY SUPPORT CHANNEL, ANGLE CLIPS AND BOLTS SHALL BE PAID FOR UNDER ITEM 504.70223.

NOTES:

1. FOR BEARING PEDESTAL DETAILS SEE SHEET NO. MR-S21 FOR SOUTH ABUTMENT AND MDOT STANDARD DETAILS SHEETS 504 (8-14) FOR NORTH ABUTMENT AND PIERS. ALL BEARING PEDESTALS SHALL HAVE A 1/8" PREFORMED FABRIC PAD AS SHOWN ON THE EPC-6A DETAIL SHOWN ON SHEET NO. MR-S21.
2. FOR EXPANSION JOINT, SEE SHEET NO. MR-S28. FOR GLAND SEAL JOINT, SEE SHEET NO. MR-S29.
3. ALL BOLTS TO BE 7/8"ø H.S. BOLTS IN 15/16"ø HOLES.
4. FOR BOLTED FIELD AND OPTIONAL SPLICE DETAILS, SEE SHEET NO. MR-S20.
5. FOR ADDITIONAL DIAPHRAGM DETAILS, SEE SHEET MR-S21.
6. DIAPHRAGM WELDED CONNECTIONS BETWEEN GIRDERS GA AND G1 SHALL BE MADE AFTER ALL NEW CONSTRUCTION DEAD LOAD IS PLACED.

△1 BRACING REQUIRED ON EXISTING DIAPHRAGM. SEE SHEET NO. MR-S21, TYPE MD1.

△2 CROSS BRACING REQUIRED ON PROPOSED DIAPHRAGM. SEE SHEET NO. MR-S21, TYPE MJ1.

M:\09009\002\123\S1FRAMMR.DWG 12/18/00 09:52

Scale:AS NOTED

No.	Revision	By	Date

Designed by:

HNTB
ARCHITECTS ENGINEERS PLANNERS

	By	Date		By	Date
Designed	CC	12/00	Checked	JRB	12/00
Drawn	LS	12/00	In Charge of	RAL	12/00

HNTB CORPORATION
2 Thomas Drive
Westbrook, ME 04092
TEL (207) 774-5155
FAX (207) 772-7410

MAINE TURNPIKE AUTHORITY
MODERNIZATION AND WIDENING PROJECT

THINKING AHEAD The Widening

MAINLINE BRIDGE WIDENING
MOUSAM RIVER OVERPASS
FRAMING PLAN & DETAILS

SHEET NUMBER: MR-S19
CONTRACT: 2001.05
XX OF XXX

BOTTOM OF SLAB ELEVATIONS AT BLOCKING POINTS

GIRDER NO.	℄ BRG. S. ABUT.	SPAN 1 .1L 1	.2L 1	.3L 1	.4L 1	.5L 1	.6L 1	.7L 1	.8L 1	.9L 1	℄ PIER1 ℄ BRG.	SPAN 2 .1L 2	.2L 2	.3L 2	.4L 2	.5L 2	.6L 2	.7L 2	.8L 2	.9L 2	℄ PIER2 ℄ BRG.	SPAN 3 .1L 2	.2L 2	.3L 2	.4L 2	.5L 2	.6L 2	.7L 2	.8L 2	.9L 2	℄ BRG. N. ABUT.
G1	88.95	89.12	89.29	89.45	89.60	89.75	89.88	90.01	90.14	90.28	87.47	87.70	87.93	88.17	88.40	88.61	88.81	89.00	89.17	89.35	85.40	85.56	85.73	85.90	86.08	86.24	86.40	86.55	86.70	86.83	83.84
G2	88.79	88.42	88.54	88.41	88.27	88.12	87.96	87.79	87.63	87.47	87.32	87.54	87.78	88.02	88.25	88.47	88.66	88.85	89.02	89.20	85.25	85.41	85.58	85.75	85.92	86.09	86.25	86.40	86.54	86.68	83.68
G3	88.54	88.42	88.30	88.16	88.02	87.87	87.71	87.54	87.38	87.22	87.07	87.29	87.53	87.77	88.00	88.22	88.42	88.60	88.77	88.95	85.00	85.16	85.33	85.50	85.67	85.84	86.00	86.15	86.30	86.43	83.43
G4	88.29	88.17	88.04	87.90	87.76	87.61	87.45	87.29	87.13	86.97	86.82	87.04	87.27	87.50	87.73	87.95	88.15	88.33	88.51	88.69	84.75	84.91	85.07	85.24	85.41	85.58	85.74	85.89	86.04	86.18	83.18

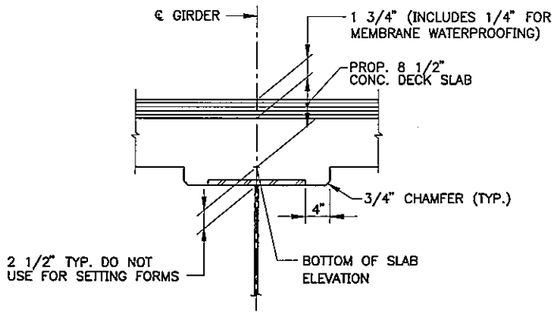

BLOCKING POINT DETAIL
NOT TO SCALE

NOTE

TO COMPENSATE FOR DEAD LOAD DEFLECTIONS, AS WELL AS POSSIBLE IRREGULARITIES IN GIRDERS, SET THE BOTTOM OF SLAB ELEVATIONS AT THE POINTS INDICATED BEFORE ANY OF THE SLAB FORMWORK IS STARTED. SEE SUBSECTION 502.10(a) OF THE STANDARD SPECIFICATIONS.

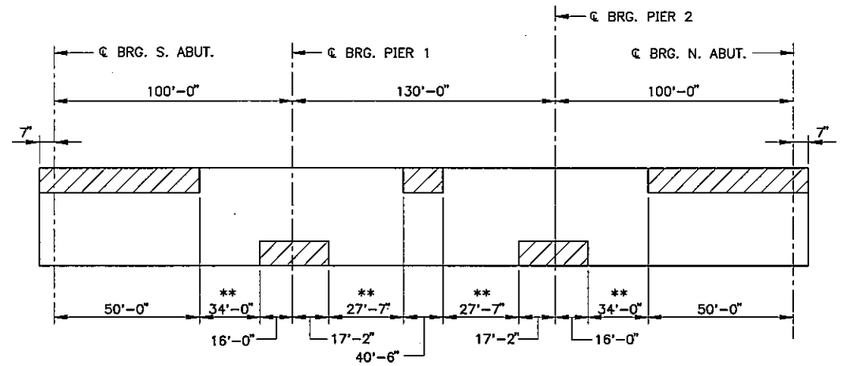

BEAM STRESS DIAGRAM
NO SCALE

AREAS OF GIRDER WHICH WILL ALWAYS BE IN COMPRESSION. ALL OTHER AREAS WILL BE IN TENSION OR ARE AREAS OF STRESS REVERSALS.

** STRESS REVERSALS

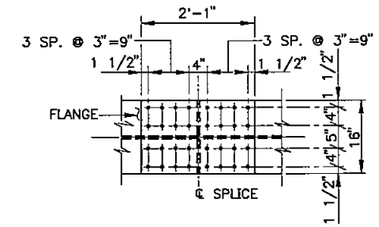

PLAN
(TOP & BOTTOM FLANGES SIMILAR)

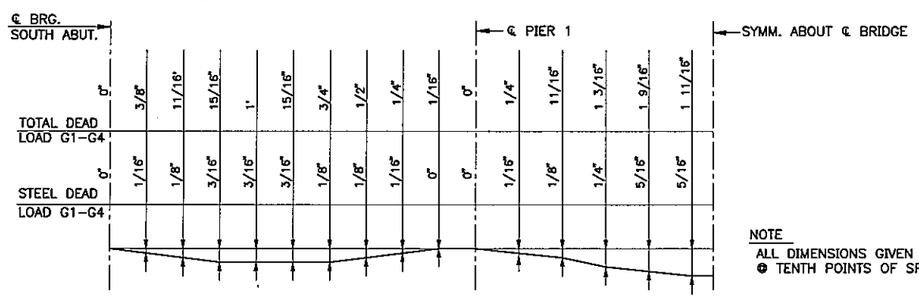

DEAD LOAD DEFLECTION DIAGRAM
HORIZ. 1" = 20'
VERT. 1" = 1"

NOTE
ALL DIMENSIONS GIVEN ARE @ TENTH POINTS OF SPANS.

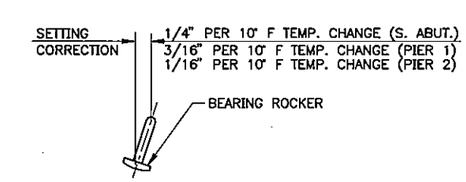

EXPANSION BEARING NOTES:

1. ROCKERS TO BE VERTICAL AT 45° F.
2. TEMPERATURE RISE, TILT ROCKERS AWAY FROM NORTH ABUTMENT.
3. TEMPERATURE FALL, TILT ROCKERS TOWARD NORTH ABUTMENT.

EXPANSION BEARING SETTING
NOT TO SCALE

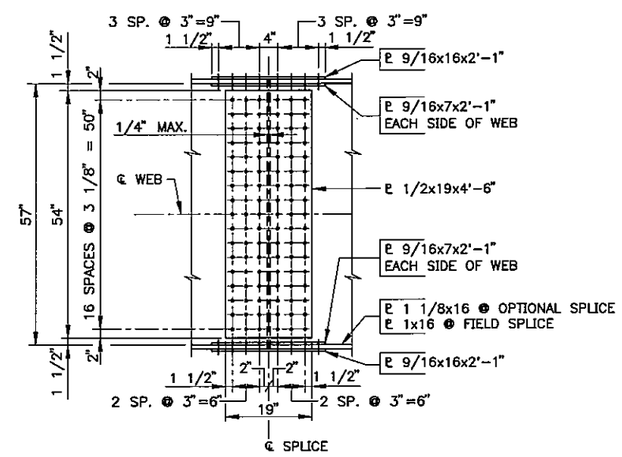

ELEVATION
OPTIONAL SPLICE AND FIELD SPLICE DETAIL
3/4" = 1'-0"

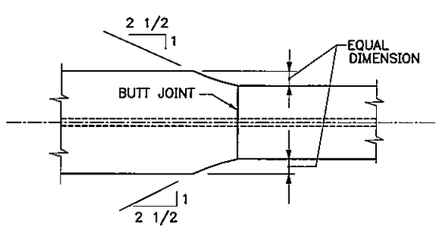

FLANGE TRANSITION DETAIL
NO SCALE

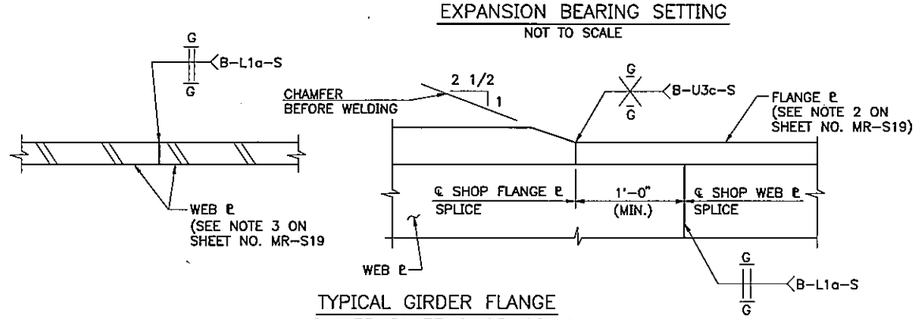

TYPICAL GIRDER FLANGE AND WEB PLATE SHOP SPLICE
NO SCALE

NOTES

1. ALL BOLTS SHALL BE 7/8"ø , AASHTO M164, HIGH STRENGTH BOLTS. HOLES SHALL BE 15/16"ø .
2. NUTS SHALL BE ON INSIDE FACE OF WEB SPLICE FOR FASCIA GIRDERS.
3. NUTS SHALL BE UP ON ALL FLANGE SPLICES.
4. FOR STRUCTURAL STEEL NOTES, SEE SHEET NO. MR-S19.

M:\09009\002\123\S6STLMR.DWG 12/26/00 11:02

Scale: AS NOTED

No.	Revision	By	Date

Designed by:

HNTB
ARCHITECTS ENGINEERS PLANNERS

	By	Date		By	Date
Designed	CC	12/00	Checked	JRB	12/00
Drawn	LS	12/00	In Charge of	RAL	12/00

HNTB CORPORATION
2 Thomas Drive
Westbrook, ME 04092
TEL (207) 774-5155
FAX (207) 772-7410

MAINE TURNPIKE AUTHORITY
MODERNIZATION AND WIDENING PROJECT

THINKING AHEAD The Widening

MAINLINE BRIDGE WIDENING
MOUSAM RIVER OVERPASS
STEEL DETAILS I

SHEET NUMBER: MR-S20
XX OF XXX

CONTRACT: 2001.05

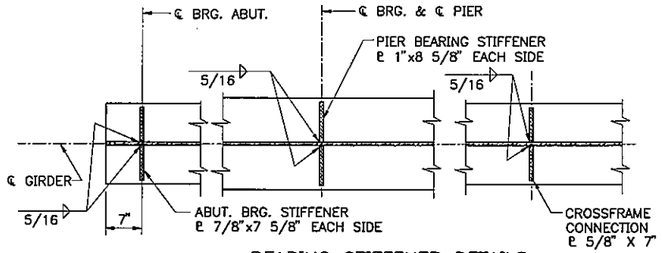

BEARING STIFFENER DETAILS

NO SCALE

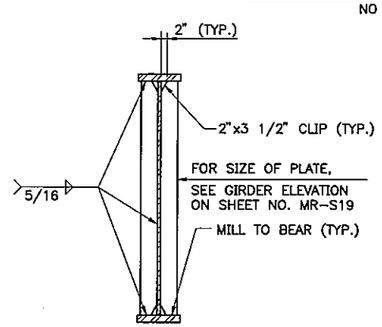

BEARING STIFFENER DETAIL

NO SCALE

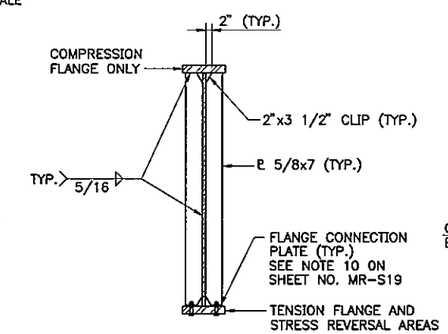

CROSSFRAME CONNECTION PLATE DETAILS

NO SCALE

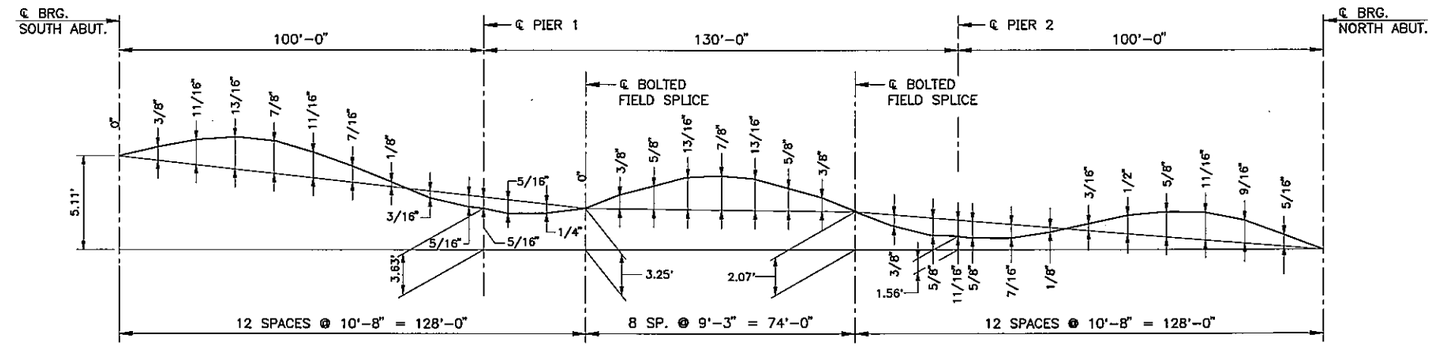

CAMBER DIAGRAM

NOT TO SCALE

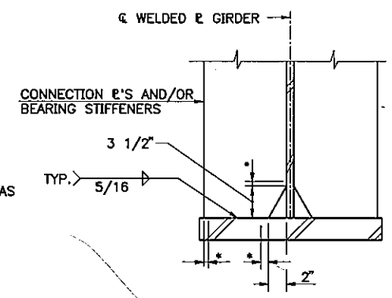

* NO WELD FOR 1/4" MIN., 1/2" MAX.
(EXCEPT MUST MAINTAIN 1" MINIMUM FROM
EDGE OF FLANGE)

WELD TERMINATION AND COPING DETAILS
FOR WELDED PLATE GIRDERS

NO SCALE

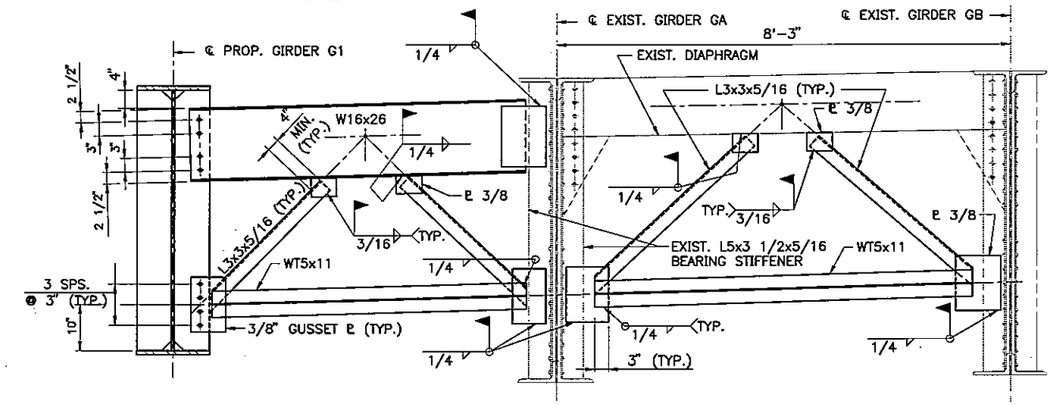

TYPE MD1

3/4" = 1'-0"

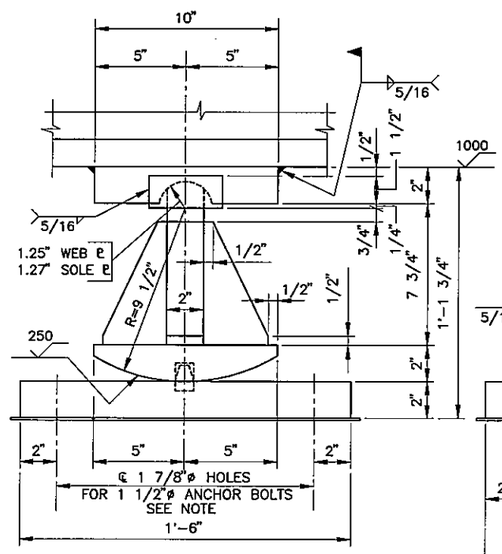

NOTE: FOR 1 1/2"ø ANCHOR BOLTS USE 4 - M-FPD-3.
SEE MDOT STANDARD DETAILS SECTION 504.

EXPANSION PEDESTAL EPC-6A

3" = 1'-0"

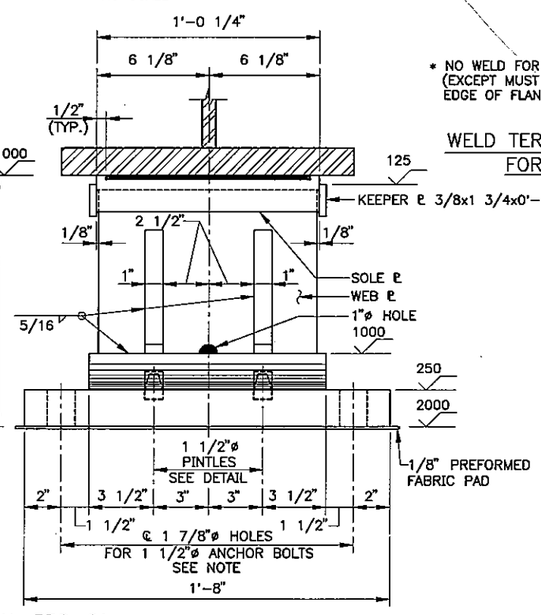

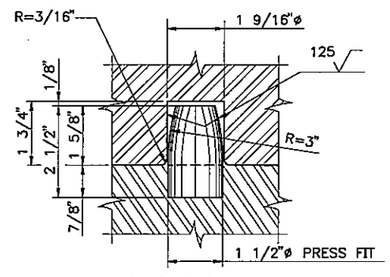

PINTLE DETAIL

3"=1'-0"

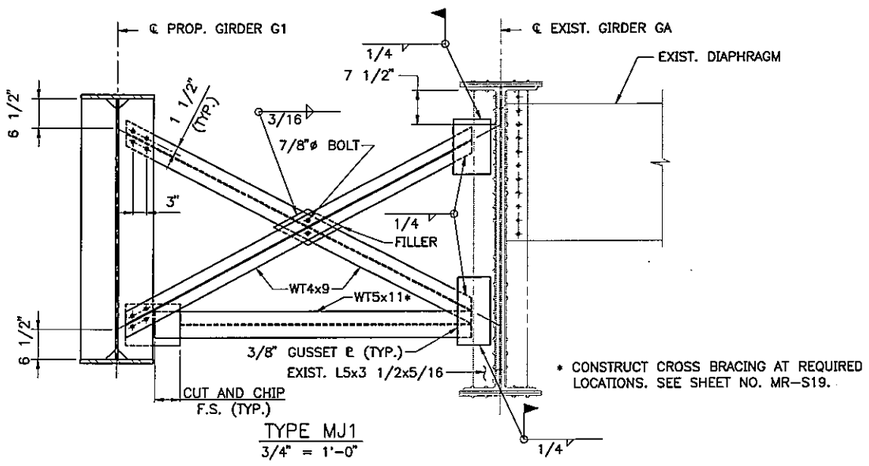

* CONSTRUCT CROSS BRACING AT REQUIRED
LOCATIONS. SEE SHEET NO. MR-S19.

TYPE MJ1

3/4" = 1'-0"

M:\09009\002\123\SSSTL2MR.DWG 12/26/00 14:22

Scale: AS NOTED

No.	Revision	By	Date

Designed by:

HNTB

ARCHITECTS ENGINEERS PLANNERS

	By	Date		By	Date
Designed	CC	12/00	Checked	JRB	12/00
Drawn	LS	12/00	In Charge of	RAL	12/00

HNTB CORPORATION
2 Thomas Drive
Westbrook, ME 04092
TEL (207) 774-5155
FAX (207) 772-7410

MAINE TURNPIKE AUTHORITY
MODERNIZATION AND WIDENING PROJECT

THINKING AHEAD The Widening

MAINLINE BRIDGE WIDENING
MOUSAM RIVER OVERPASS
STEEL DETAILS II

SHEET NUMBER: MR-S21

CONTRACT: 2001.05

XX OF XXX

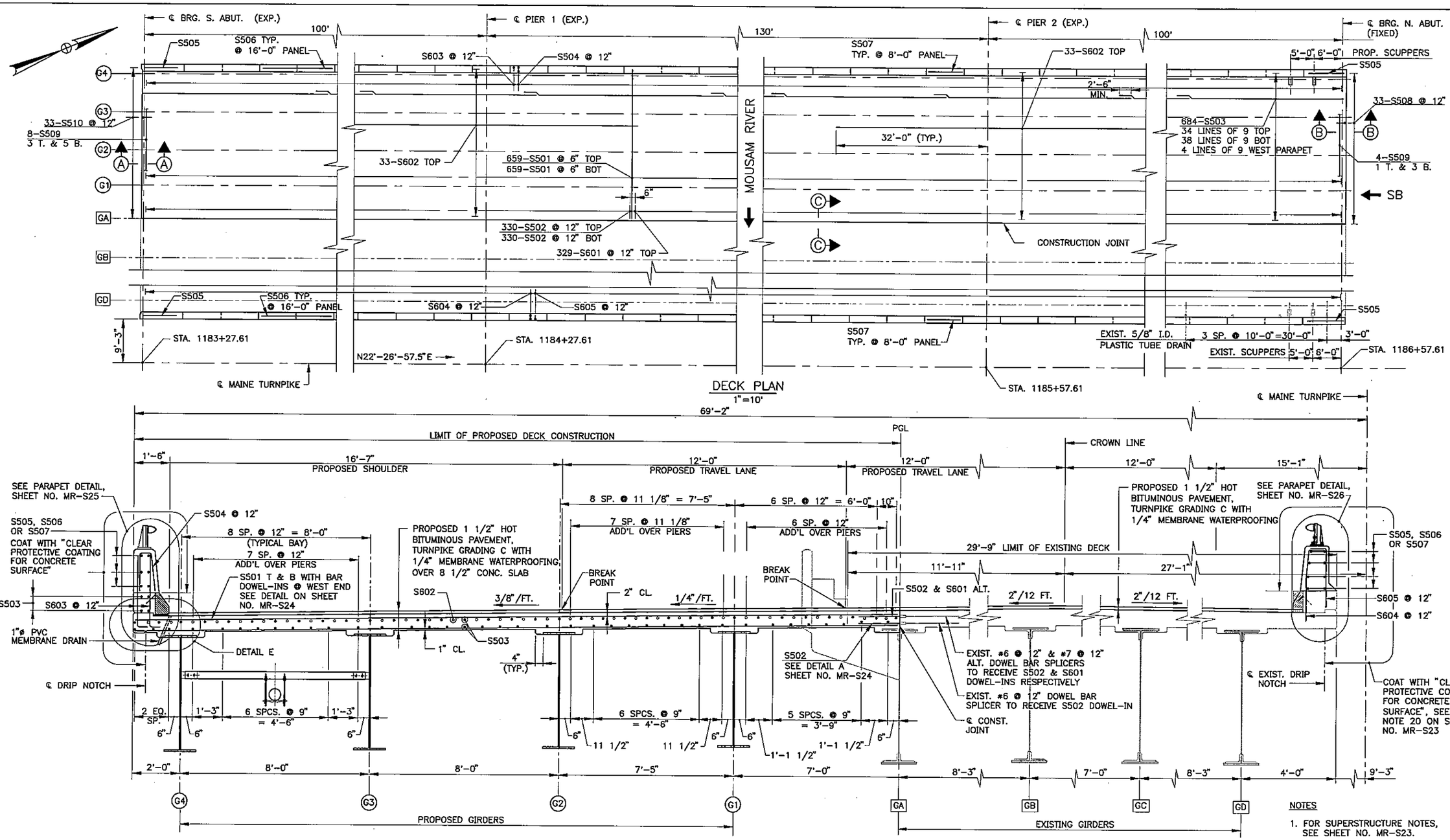

PARTIAL SOUTHBOUND DECK CROSS SECTION
1/2" = 1'-0"

NOTES

1. FOR SUPERSTRUCTURE NOTES, SEE SHEET NO. MR-S23.
2. FOR SECTIONS A-A, B-B, C-C AND DETAIL E, SEE SHEET NO. MR-S24.

Scale: AS NOTED	Designed by: HNTB ARCHITECTS ENGINEERS PLANNERS	HNTB CORPORATION 2 Thomas Drive Westbrook, ME 04092 TEL (207) 774-5155 FAX (207) 772-7410	MAINE TURNPIKE AUTHORITY MODERNIZATION AND WIDENING PROJECT	MAINLINE BRIDGE WIDENING MOUSAM RIVER OVERPASS DECK PLAN & SECTION
No. / Revision / By / Date			THINKING AHEAD The Widening	SHEET NUMBER: MR-S22
	Designed CC 12/00; Checked JRB 12/00; Drawn AMR 12/00; In Charge of RAL 12/00			CONTRACT: 2001.05 XX OF XXX

M:\09009\002\123\S1DECKMR.DWG 12/18/00 10:59

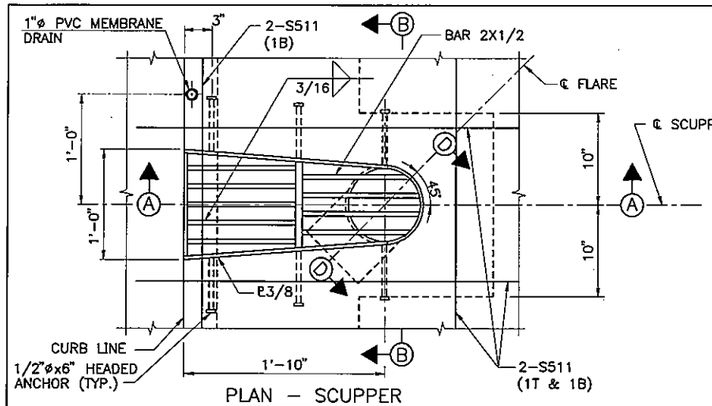

PLAN – SCUPPER
1 1/2"=1'-0"

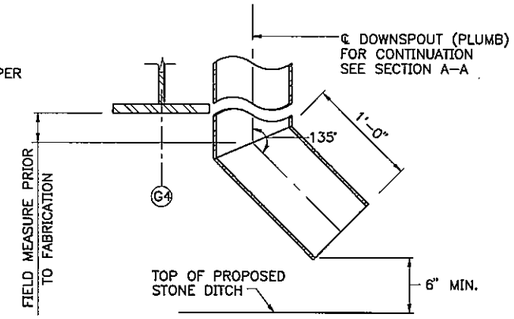

SECTION D-D
1 1/2"=1'-0"

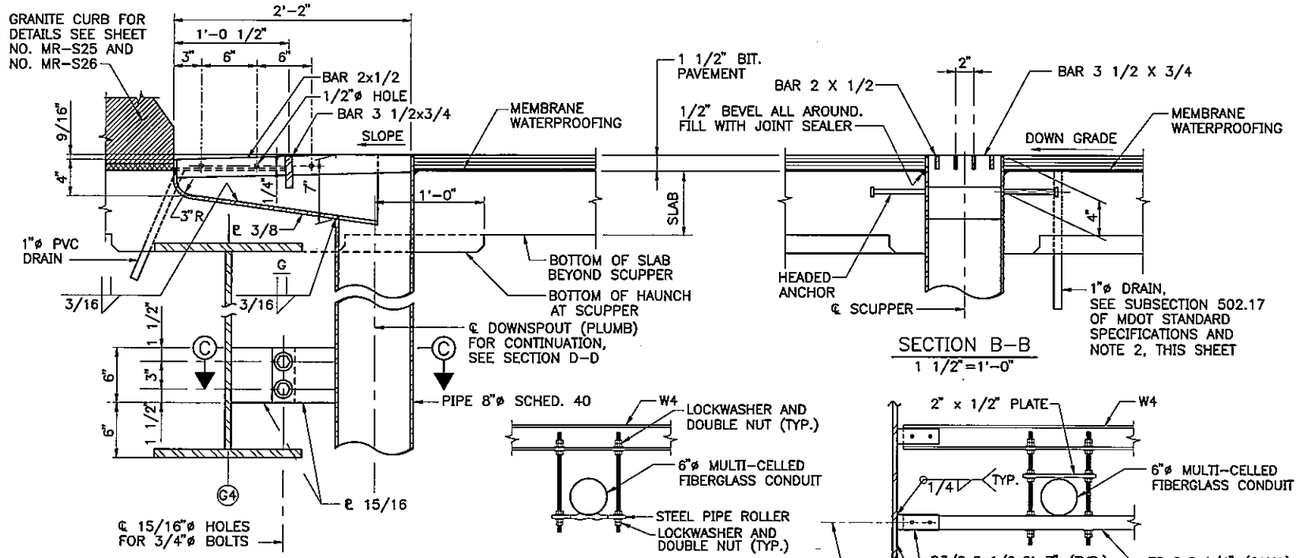

SECTION A–A
1 1/2"=1'-0"

SECTION B–B
1 1/2"=1'-0"

INTERMEDIATE CONDUIT HANGER
1"= 1'-0"

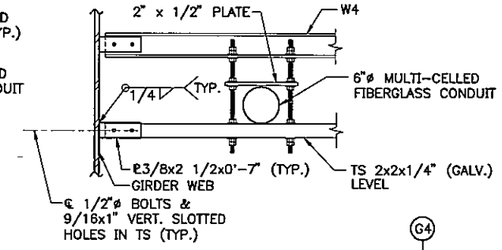

FIXED CONDUIT HANGER ANCHOR SUPPORT
1"= 1'-0"

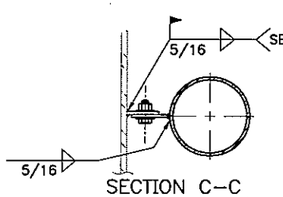

SECTION C–C
1 1/2"=1'-0"

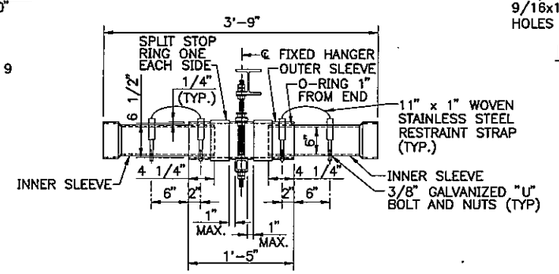

BACK TO BACK EXPANSION JOINT
NO SCALE

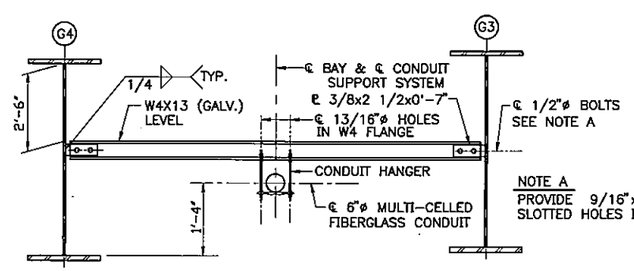

NOTE A
PROVIDE 9/16"x1" VERTICAL SLOTTED HOLES IN W4

CONDUIT SUPPORT DETAIL
NO SCALE

SCUPPER NOTES

1. ALL WELDS TO BE CONTINUOUS 1/4" FILLET WELDS EXCEPT AS NOTED.
2. DO NOT COVER DECK DRAINS WITH MEMBRANE WATERPROOFING. DEPRESS DRAINS 1/2" BELOW TOP OF SLAB, PROVIDE 23 GAUGE GALVANIZED SCREENS (1/4" MESH) OVER DRAINS.
3. SCUPPERS TO BE GALVANIZED AFTER FABRICATION. GALVANIZING SHALL CONFORM TO ASTM A153.
4. ALL PLATES SHALL CONFORM TO ASTM A709, GRADE 36.
5. DOWNSPOUT AND FLARE SHALL CONFORM TO ASTM A501.
6. PAYMENT FOR SCUPPERS, PVC DRAINS AND SCREENS INCIDENTAL TO CONTRACT ITEM 502.26323.
7. FOR LOCATION OF SCUPPERS AND 1"ø DRAINS, SEE SHEET NO. MR-S22.
8. FIELD MEASUREMENT IS REQUIRED TO DETERMINE THE LENGTH OF DOWNSPOUT BEYOND THE BOTTOM FLANGE AND SHALL BE SUBMITTED TO THE ENGINEER FOR APPROVAL PRIOR TO FABRICATION.
9. AFTER FIELD WELDING, FIELD REPAIR GALVANIZE WITH ZINC RICH PAINT ACCORDING TO SECTION 506 OF THE STANDARD SPECIFICATIONS. (PAYMENT INCIDENTAL TO ITEM 502.26323).
10. GRATING SHALL BE A COMMERCIAL HEAVY-DUTY GRATING.

CONDUIT SUPPORT SYSTEM NOTES

1. FIBER OPTIC CONDUITS SHALL BE MULTI-CELLED BULLET RESISTANT FIBERGLASS WITH EIGHT (8) INNER DUCTS.
2. CONDUITS SHALL EXTEND 1'-8" BEYOND THE BACK FACE OF ABUTMENT BACKWALLS. A TRANSITION SHALL BE PROVIDED BETWEEN THE FIBER OPTIC CONDUITS AND THE BURIED CABLE CONDUITS.
3. COST OF FURNISHING AND INSTALLING SUPPORTING SYSTEM, CONDUITS, PULLWIRES, EXPANSION JOINTS, AND TRANSITION FITTINGS SHALL BE PAID FOR UNDER TEM 626.223. (DOES NOT INCLUDE W4 OR ℄ 3/8).
4. PROVIDE TWO (2) CONDUIT EXPANSION JOINTS AS SHOWN THE FRAMING PLAN ON SHEET NO. MR-S19.
5. CONDUIT HANGERS SHALL BE INTERMEDIATE HANGERSS, EXCEPT AT CONDUIT EXPANSION JOINTS. THE CONDUIT HANGERS AT THE CONDUIT EXPANSION JOINTS SHALL BE FIXED CONDUIT HANGERS.
6. OPENINGS SHALL BE PROVIDED IN THE ABUTMENT BACKWALL. FOR DETAILS, SEE SHEET NOS. MR-S7 THROUGH MR-S10.
7. CONDUITS NEED NOT BE SUPPORTED AT DIAPHRAGM LOCATIONS.

SUPERSTRUCTURE NOTES

1. CHAMFER ALL EXPOSED EDGES OF PROPOSED CONCRETE 3/4", UNLESS OTHERWISE NOTED.
2. REINFORCING STEEL SHALL HAVE A MINIMUM COVER OF 2", UNLESS OTHERWISE NOTED.
3. MORTAR FOR BEDDING AND FOR JOINTS IN THE GRANITE CURB SHALL CONTAIN A NON-SHRINK ADDITIVE.
4. ALL BRIDGE PARAPET CONCRETE, INCLUDING INSIDE FACE, TOP AND OUTSIDE FACE, END POSTS AND DECK FASCIA SHALL HAVE A RUBBED FINISHED PRIOR TO THE APPLICATION OF THE CLEAR PROTECTIVE COATING FOR CONCRETE SURFACE.
5. CLEAR PROTECTIVE COATING FOR CONCRETE SURFACE SHALL BE APPLIED TO THE FOLLOWING AREAS: PARAPET SURFACES, FASCIA DOWN TO DRIP NOTCH AND ALL EXPOSED CONCRETE SURFACES ON THE END POSTS.
6. BEFORE APPLYING CLEAR PROTECTIVE COATING TO EAST PARAPET, EXISTING CONCRETE SURFACES SHALL BE PREPARED ACCORDING TO THE MANUFACTURER'S REQUIREMENTS.
7. FOR 1-BAR ALUMINUM BRIDGE RAIL DETAILS, SEE SHEET NO. MR-S27.
8. IF THE SLAB PLACEMENT HAS TO BE TERMINATED, THE TERMINATION POINT MUST BE AT THE POINTS INDICATED IN THE PLACEMENT DETAILS, SHOWN ON SHEET NO. MR-S24.
9. ADJUST REINFORCING STEEL TO FIT AROUND THE SCUPPER IN A MANNER APPROVED OF BY THE ENGINEER. CUT REINFORCING STEEL IN THE FIELD TO SUIT, THEN EPOXY-COAT CUT ENDS.
10. FOR REINFORCING STEEL SCHEDULE, SEE SHEET NO. MR-S31.
11. FOR SCUPPER DETAILS SEE THIS SHEET. FOR DRAIN DETAILS SEE SHEET NO. MR-S25.
12. FOR SLAB DETAILS, SEE SHEET NO. MR-S24.
13. FOR ROADWAY JOINT DETAILS, SEE SHEET NOS. MR-S28 AND MR-S29.
14. THE CONCRETE DECK SHALL BE GIVEN A SMOOTH BULL FLOAT OR WOOD FLOAT FINISH.
15. PROPOSED GRANITE CURB JOINTS SHALL LINE UP WITH PARAFFIN AND DUMMY JOINTS.
16. THE AUTHORITY'S PERSONNEL SHALL PROFILE THE TOP OF ALL PROPOSED STRINGERS BEFORE THE FORMWORK IS STARTED AND SHALL SUPPLY THE CONTRACTOR WITH FINAL BOTTOM OF SLAB ELEVATIONS. TEN (10) DAYS SHALL BE ALLOWED FOR THE BLOCKING POINT TURN AROUND TIME.
17. STAY-IN-PLACE FORMS SHALL NOT BE USED.
18. PREPARE EXISTING DECK EDGE SURFACE TO BE SOUND, CLEAN AND FREE OF BOND INHIBITING MATERIALS. ANY CONCRETE AREAS FOUND TO BE UNSOUND, SHALL BE RE-CHIPPED BY THE CONTRACTOR, UNTIL APPROVED BY THE ENGINEER.
19. APPLY A BONDING AGENT TO THE EXISTING DECK SLAB EDGE SURFACE, BY FOLLOWING THE MANUFACURER'S INSTRUCTION AND APPROVAL OF THE ENGINEER. (PAYMENT SHALL BE INCIDENTAL TO ITEM 502.26323).
20. FOR REINFORCING STEEL BAR CHAIRS, THE CONTRACTOR SHALL SUBMIT SHOP DRAWINGS INDICATING SPACING.

M:\09009\002\123\S5DET1MR.DWG 12/22/00 11:43

Scale: AS NOTED

No.	Revision	By	Date

Designed by:

HNTB
ARCHITECTS ENGINEERS PLANNERS

	By	Date		By	Date
Designed	CC	12/00	Checked	JRB	12/00
Drawn	LS	12/00	In Charge of	RAL	12/00

HNTB CORPORATION
2 Thomas Drive
Westbrook, ME 04092
TEL (207) 774-5155
FAX (207) 772-7410

MAINE TURNPIKE AUTHORITY
MODERNIZATION AND WIDENING PROJECT

THINKING AHEAD The Widening

MAINLINE BRIDGE WIDENING
MOUSAM RIVER OVERPASS
SUPERSTRUCTURE DETAILS I

SHEET NUMBER: MR-S23
XX OF XXX

CONTRACT: 2001.05

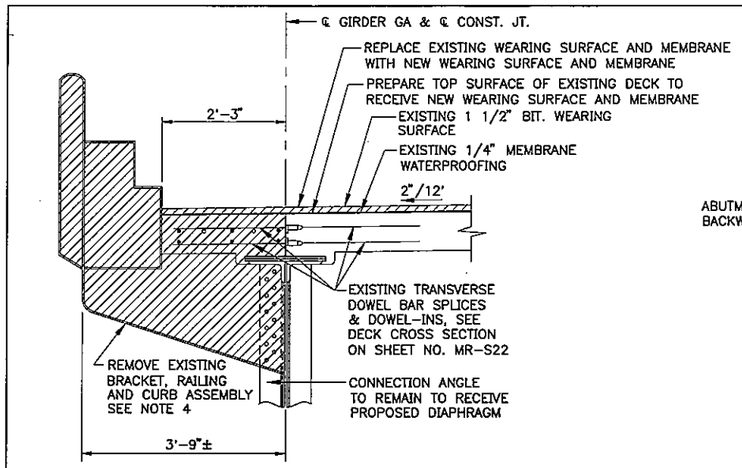

DETAIL A
3/4" = 1'-0"

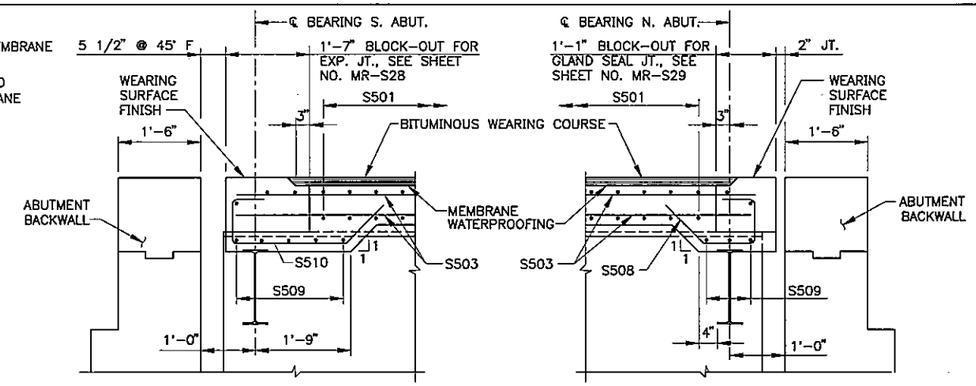

SECTION A-A
3/4" = 1'-0"

SECTION B-B
3/4" = 1'-0"

DECK DEMOLITION NOTES:

1. REMOVAL OF EXISTING EAST BRIDGE RAILING (SEE NOTE 1 ON SHEET NO. MR-S18) AND ANCHOR BOLTS SHALL BE INCIDENTAL TO ITEM 202.122. REMOVAL OF CONCRETE RAIL CONNECTORS AT BRIDGE ENDS SHALL BE INCLUDED UNDER ITEM 202.12. CONTRACTOR SHALL BE CAREFUL REMOVING CONCRETE RAIL CONNECTION POST (CONCRETE AND REINFORCEMENT) AND NOT DAMAGE THE CURB BELOW. ANY PORTION OF CURB WHICH SHALL REMAIN AND IS DETERMINED BY THE ENGINEER TO BE DAMAGED, SHALL BE REPAIRED BY THE CONTRACTOR AT COST TO THE AUTHORITY. CONTRACTOR SHALL THEN SUBMIT A METHOD OF REPAIR TO THE ENGINEER FOR APPROVAL.
2. FOR LIMITS OF PAYMENT OF REMOVING EXISTING BITUMINOUS AND MEMBRANE, SEE SHEET NO. MR-S18.
3. SAW CUT THE EXISTING SLAB 1-INCH DEEP AT THE TOP OF THE CONSTRUCTION JOINT THE FULL LENGTH OF THE BRIDGE DECK (PAYMENT SHALL BE INCIDENTAL TO ITEM 202.122). CONTRACTOR SHALL BE CAREFUL NOT TO CUT OR DAMAGE ANY EXISTING TRANSVERSE REINFORCING STEEL WHICH SHALL BE KEPT IN PLACE. ANY EXISTING REINFORCING STEEL, DETERMINED BY THE ENGINEER TO BE DAMAGED, SHALL BE REPAIRED BY THE CONTRACTOR AT NO COST TO THE AUTHORITY. CONTRACTOR SHALL THEN SUBMIT A METHOD OF REPAIR TO THE ENGINEER FOR APPROVAL.
4. REMOVE EDGE OF EXISTING DECK SLAB ALONG WITH EXISTING BRACKET, RAILING AND CURB ASSEMBLY (PAYMENT SHALL BE INCIDENTAL TO ITEM 202.122). EXISTING BRACKET AND RIVETS TO CONNECTION ANGLE SHALL BE REMOVED ENTIRELY TO ALLOW FOR PROPOSED DIAPHRAGM CONNECTION. CONTRACTOR SHALL BE CAREFUL NOT TO DAMAGE EXISTING STRUCTURE AND CONNECTION ANGLE. ANY EXISTING STRUCTURE DETERMINED BY THE ENGINEER TO BE DAMAGED, SHALL BE REPAIRED BY THE CONTRACTOR AT NO COST TO THE AUTHORITY. CONTRACTOR SHALL THEN SUBMIT A METHOD OF REPAIR TO THE ENGINEER FOR APPROVAL. THE CONTRACTOR SHALL SELECTIVELY DEMOLISH CONCRETE DECK TO LOCATE DOWEL IN BARS.
5. REMOVE ALL CONCRETE TO THE EDGE OF EXISTING THREADED COUPLERS. REMOVE DOWEL-INS AND CLEAN CONNECTION WITH AN ACCEPTABLE CLEANING METHOD APPROVED BY THE ENGINEER (PAYMENT SHALL BE INCIDENTAL TO ITEM 202.122).

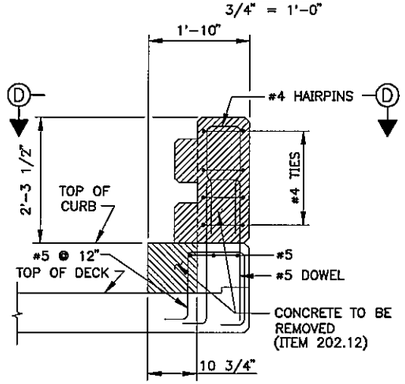

AT BRIDGE ENDS

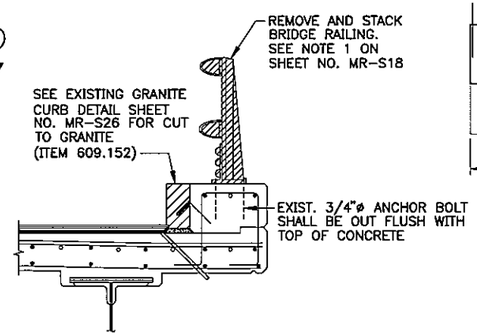

ALONG BRIDGE LENGTH

DETAIL B
3/4" = 1'-0"

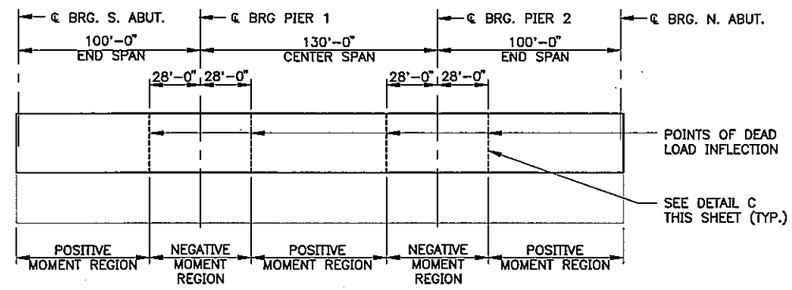

NOTES

1. THE SUPERSTRUCTURE SLAB CONCRETE SHALL BE PLACED IN ONE CONTINUOUS OPERATION AND THE CONCRETE SHALL BE KEPT PLASTIC ONE COMPLETE SPAN BEHIND THE SPAN BEING PLACED.
2. IF THE SPAN PLACEMENT HAS TO BE TERMINATED, THE TERMINATION LINES SHALL BE AT THE POINTS OF DEAD LOAD INFLECTION. THE POSITIVE MOMENT REGION OF THE CENTER SPAN AND ONE OF THE END SPANS SHALL BE PLACED FIRST. THE FINAL POSITIVE MOMENT REGION AT THE OTHER END SPAN SHALL BE PLACED NEXT. THE NEGATIVE MOMENT REGIONS SHALL BE PLACED LAST.
3. THE DIRECTION OF POUR SHALL BE FROM THE LOW POINT TO THE HIGH POINT.

DECK PLACEMENT DETAIL
1" = 40'

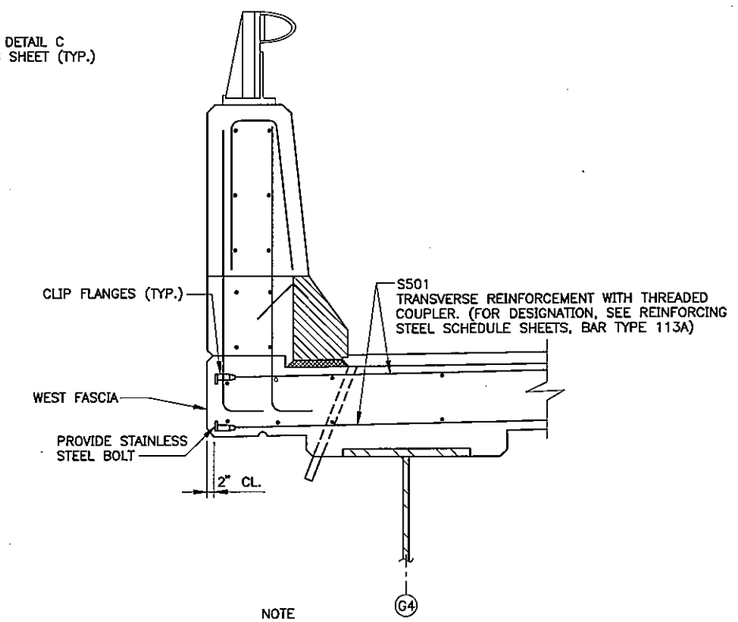

NOTE
THREADED COUPLER PROVIDED FOR FUTURE WIDENING OF MAINE TURNPIKE.

DETAIL E
NO SCALE

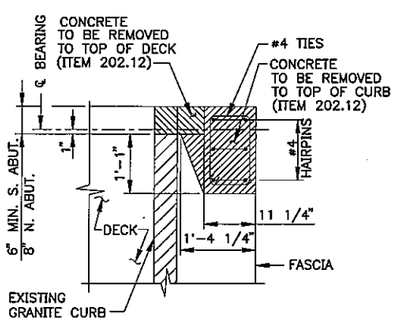

SECTION D-D
3/4" = 1'-0"

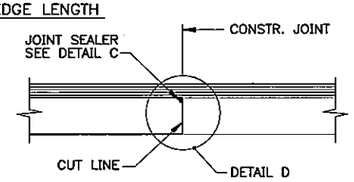

SECTION C-C
NOT TO SCALE

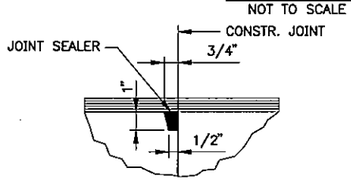

DETAIL C
3" = 1'-0"

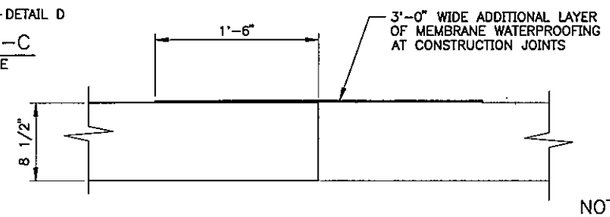

DETAIL D
1 1/2" = 1'-0"

NOTES

1. FOR LOCATION OF SECTIONS A-A, B-B AND C-C, AND DETAIL E, SEE SHEET MR-S22.
2. FOR LOCATION OF DETAILS A AND B, SEE SHEET MR-S18.

M:\09009\002\123\S5DET2MR.DWG 12/22/00 08:21

Scale: AS NOTED

No.	Revision	By	Date

Designed by:

HNTB
ARCHITECTS ENGINEERS PLANNERS

	By	Date		By	Date
Designed	CC	12/00	Checked	JRB	12/00
Drawn	LS	12/00	In Charge of	RAL	12/00

HNTB CORPORATION
2 Thomas Drive
Westbrook, ME 04092
TEL (207) 774-5155
FAX (207) 772-7410

MAINE TURNPIKE AUTHORITY
MODERNIZATION AND WIDENING PROJECT

THINKING AHEAD The Widening

MAINLINE BRIDGE WIDENING
MOUSAM RIVER OVERPASS
SUPERSTRUCTURE DETAILS II

SHEET NUMBER: MR-S24
XX OF XX

CONTRACT: 2001.05

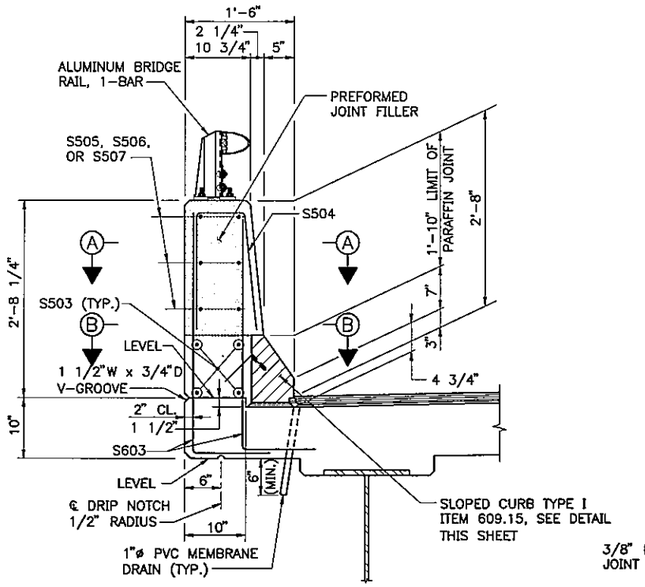

WEST PARAPET DETAIL
1"=1'-0"

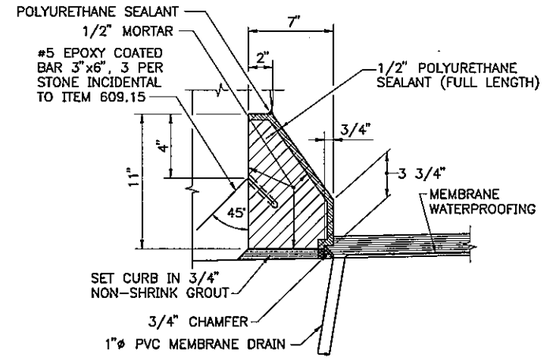

GRANITE CURB DETAIL
2" = 1'-0"

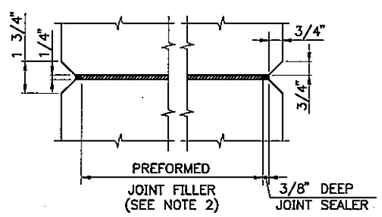

SECTION A-A
(PARAFFIN JOINT)
3"=1'-0"

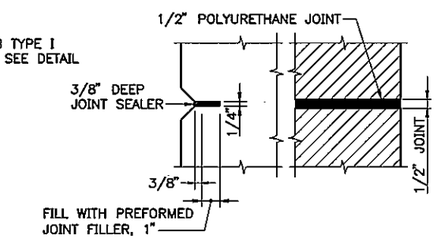

SECTION B-B
WEST PARAPET ONLY
3"=1'-0"

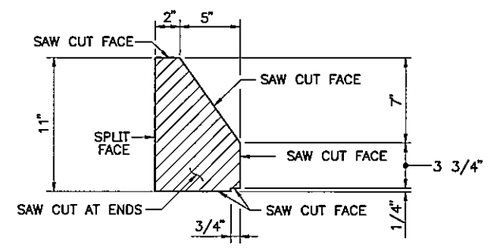

GRANITE CURB CUT DETAIL
2" = 1'-0"

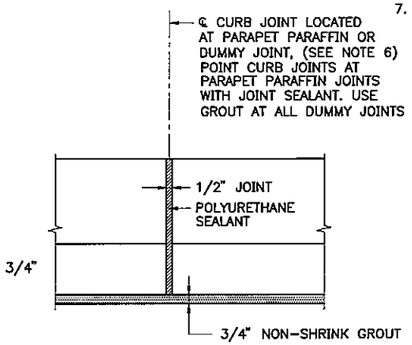

BRIDGE CURB ELEVATION
2" = 1'-0"

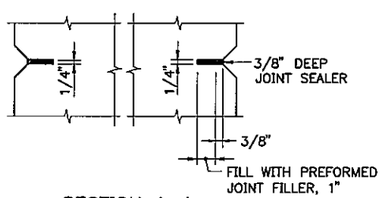

SECTION A-A
(DUMMY JOINT)
3"=1'-0"

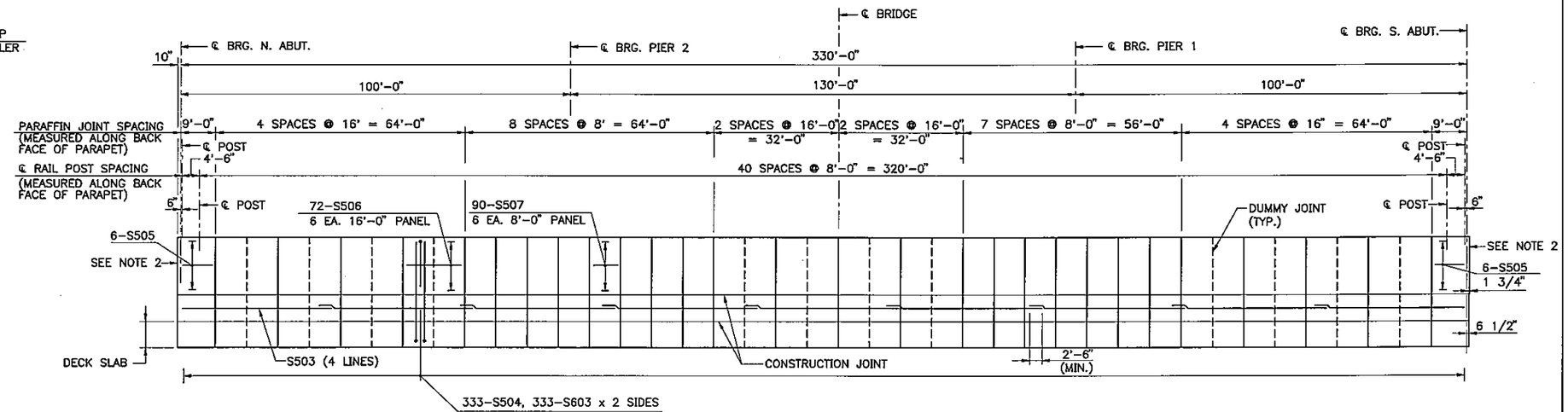

WEST PARAPET ELEVATION
HORIZ. 1/16" = 1'-0"
VERT. 1/2" = 1'-0"

PARAFFIN AND DUMMY JOINT NOTES

1. CONCRETE SHALL BE PLACED SIMULTANEOUSLY ON BOTH SIDES OF JOINT. ASPHALT TYPE JOINT FILLER SHALL NOT BE USED. ONLY CERAMAR OR CORK TYPE SHALL BE PERMITTED.
2. PREFORMED JOINT FILLER SHALL CONFORM TO ASTM DESIGNATION D 1752 AND MAY BE SUPPORTED WITH A THIN STEEL PLATE. REMOVE PLATE CAREFULLY WHILE CONCRETE IS PLASTIC.
3. SECTION B-B APPLIES TO DUMMY AND PARAFFIN JOINT LOCATIONS.
4. JOINT SEALER SHALL BE SIKAFLEX-1A.
5. PREFORMED JOINT FILLER AND JOINT SEALER SHALL BE INCIDENTAL TO ITEM 502.26423, STRUCTURAL CONCRETE PARAPETS-MOUSAM RIVER.
6. WEST PARAPET CURB JOINTS SHALL BE ALIGNED WITH PARAFFIN AND DUMMY JOINTS.
7. FOR ADDITIONAL DETAIL AT DECK JOINT, SEE SHEET NOS. MR-S28, MR-S29 AND MR-S30.

NOTES

1. ALL PARAPET REINFORCING BAR MARKS ARE DUPLICATED ON THE DECK REINFORCEMENT, SHEET.
2. FOR ADDITIONAL DETAILS AT DECK JOINT, INCLUDING COVER PLATE AND CURB PLATE, SEE SHEET NOS. MR-S28, MR-S29 AND MR-S30.

M:\09009\002\123\S5PARAMR.DWG 12/26/00 14:20

Scale: AS NOTED

No.	Revision	By	Date

Designed by:

HNTB
ARCHITECTS ENGINEERS PLANNERS

	By	Date		By	Date
Designed	CC	12/00	Checked	JRB	12/00
Drawn	RJC	12/00	In Charge of	RAL	12/00

HNTB CORPORATION
2 Thomas Drive
Westbrook, ME 04092
TEL (207) 774-5155
FAX (207) 772-7410

MAINE TURNPIKE AUTHORITY
MODERNIZATION AND WIDENING PROJECT

THINKING AHEAD The Widening

MAINLINE BRIDGE WIDENING
MOUSAM RIVER OVERPASS
PARAPET DETAILS I

SHEET NUMBER: MR-S25
XX OF XX

CONTRACT: 2001.05

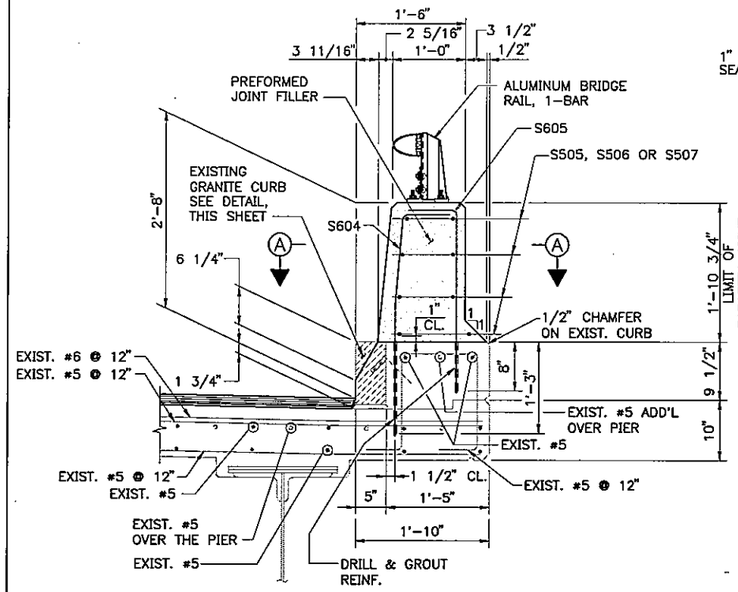

EAST PARAPET DETAIL
1"=1'-0"

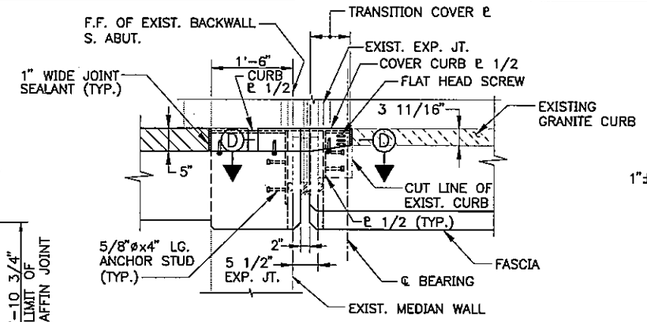

SECTION B-B
3/4" = 1'-0"

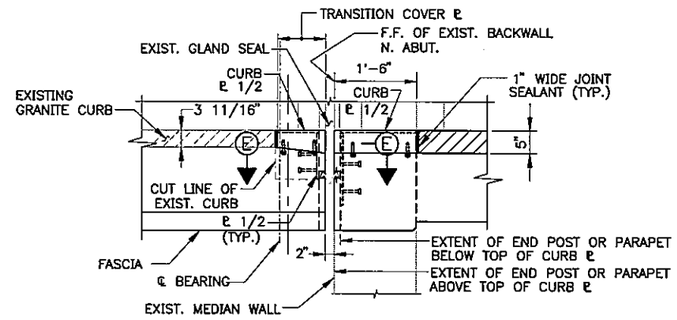

SECTION C-C
3/4" = 1'-0"

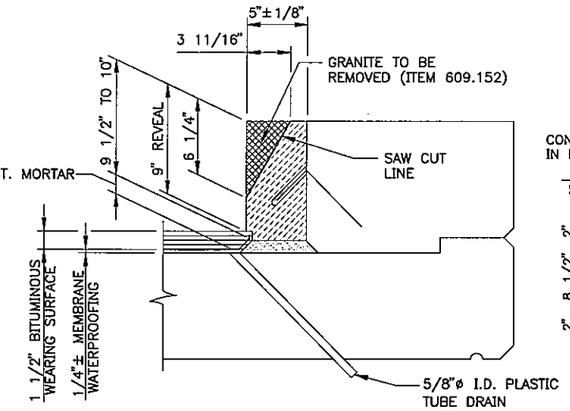

EXISTING GRANITE CURB DETAIL
2"=1'-0"

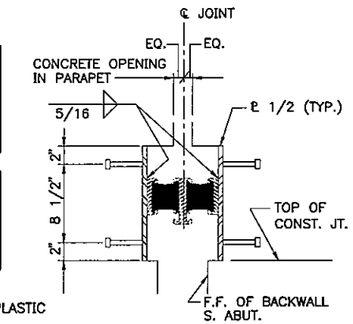

SECTION D-D
1 1/2"=1'-0"

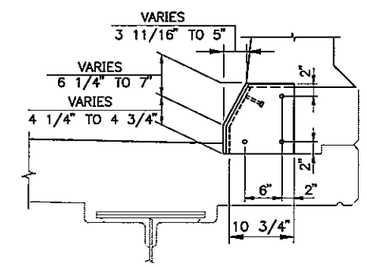

WEST PARAPET CURB END PLATE ELEVATION
SOUTH ABUT. SHOWN. NORTH ABUT. OPPOSITE HAND
1"=1'-0"

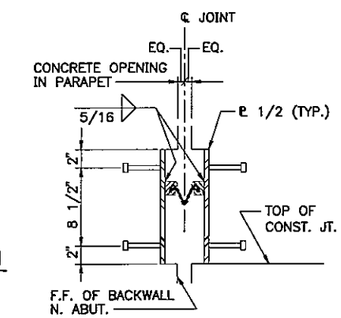

SECTION E-E
1 1/2"=1'-0"

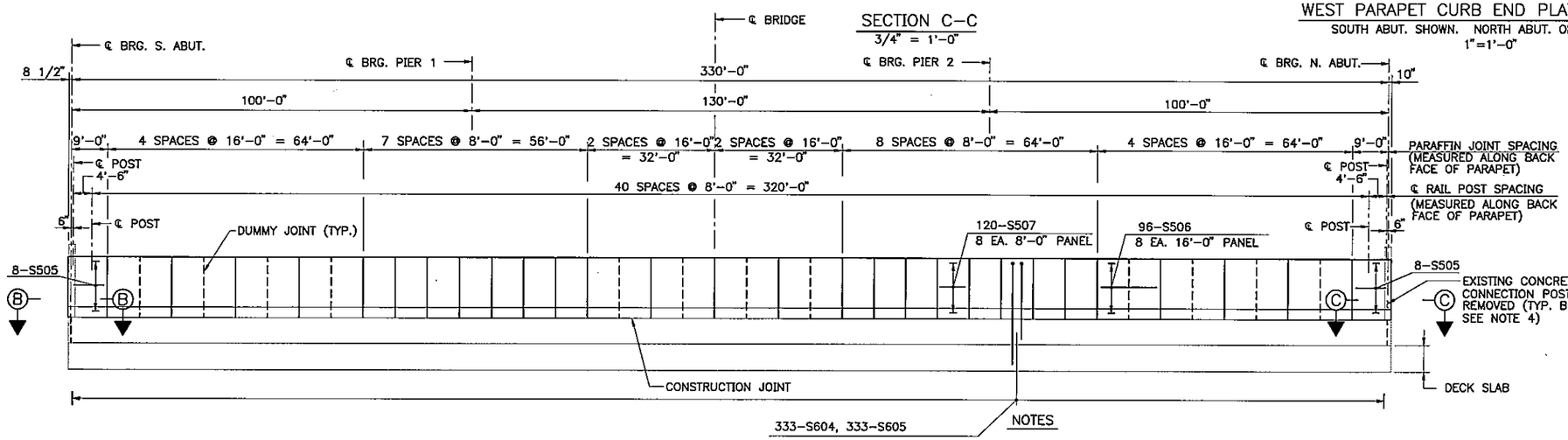

EAST PARAPET ELEVATION
HORIZ. 1/16" = 1'-0"
VERT. 1/2" = 1'-0"

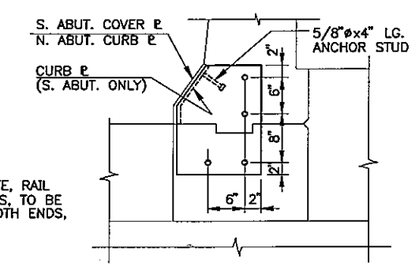

WEST END POST CURB END PLATE ELEVATION
SOUTH ABUT. SHOWN. NORTH ABUT. OPPOSITE HAND
1"=1'-0"

NOTES

1. ALL PARAPET REINFORCING BAR MARKS ARE DUPLICATED ON THE DECK REINFORCEMENT, SHEET.
2. FOR SECTION A-A SEE SHEET NO. MR-S25.
3. FOR PARAFFIN AND DUMMY JOINT NOTES, SEE SHEET NO. MR-S25.
4. FOR DETAILS OF EXISTING CONCRETE, RAIL CONNECTION POSTS, SEE CONTRACT 89.6 PLANS, SHEET NO. 26 AND DETAIL B AT BRIDGE ENDS ON SHEET NO. MR-S24.
5. FOR FLAT HEAD SCREW DETAIL AT CURB PLATE AT SOUTH ABUTMENT, SEE SHEET NO. MR-S30.

M:\09009\002\123\S5PAR2MR.DWG 12/29/00 09:11

Scale: AS NOTED

No.	Revision	By	Date

Designed by:

HNTB
ARCHITECTS ENGINEERS PLANNERS

	By	Date		By	Date
Designed	CC	12/00	Checked	JRB	12/00
Drawn	RJC	12/00	In Charge of	RAL	12/00

HNTB CORPORATION
2 Thomas Drive
Westbrook, ME 04092
TEL (207) 774-5155
FAX (207) 772-7410

MAINE TURNPIKE AUTHORITY
MODERNIZATION AND WIDENING PROJECT

THINKING AHEAD The Widening

MAINLINE BRIDGE WIDENING
MOUSAM RIVER OVERPASS
PARAPET DETAILS II

CONTRACT: 2001.05

SHEET NUMBER: MR-S26
XX OF XX

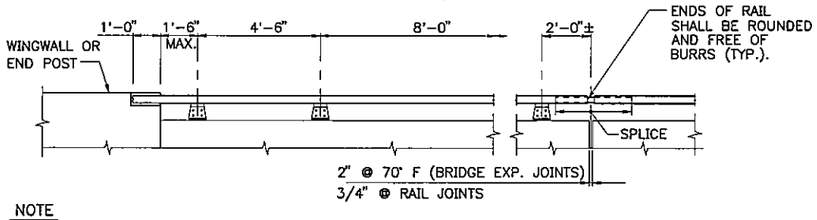

NOTE

LENGTHS OF RAIL SHALL BE ATTACHED TO A MIN. OF FOUR (4) RAIL POST WHENEVER POSSIBLE, AND IN ANY CASE NEVER LESS THAN TWO (2). RAIL POST ARE TO BE SET NORMAL TO GRADE UNLESS OTHERWISE SHOWN ON THE BRIDGE PLANS.

RAILING – ELEVATION

3/8"=1'-0"

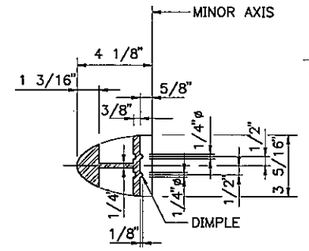

SECTION A–A

3"=1'-0"

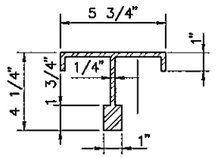

POST SECTION

3"=1'-0"

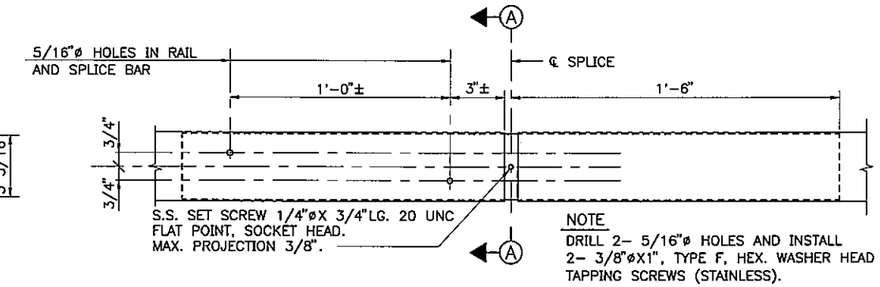

NOTE

DRILL 2– 5/16"ø HOLES AND INSTALL 2– 3/8"øX1", TYPE F, HEX. WASHER HEAD TAPPING SCREWS (STAINLESS).

SPLICE DETAIL

3"=1'-0"

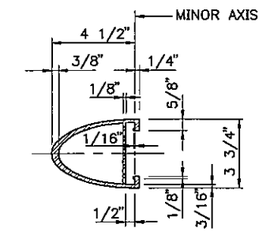

RAIL MEMBER

3"=1'-0"

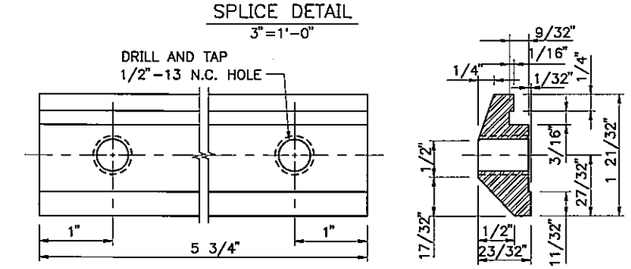

CLAMP BAR DETAILS

FULL SIZE

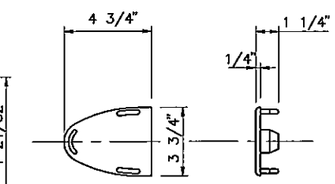

CAST ALUMINUM DRIVE FIT RAIL CAP

3"=1'-0"

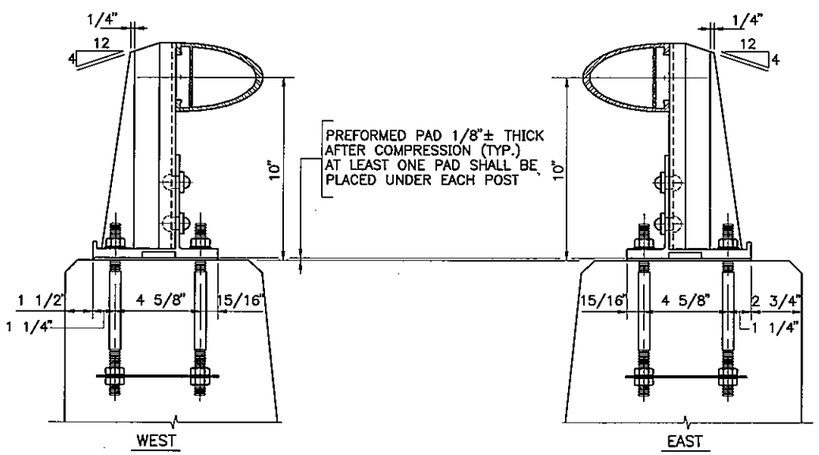

BRIDGE RAILING ASSEMBLY

3"=1'-0"

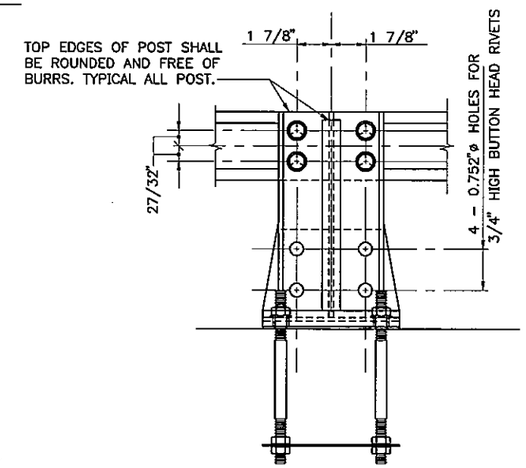

OUTSIDE ELEVATION OF POST

3"=1'-0"

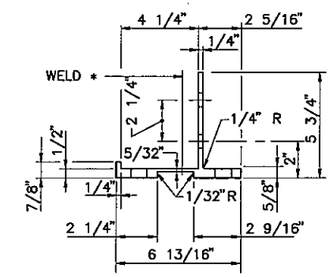

POST BASE SECTION

3"=1'-0"

NOTE

* ONE–PIECE BASE PLATE MAY BE SUBSTITUTED, PROVIDED THAT THE REQUIRED LENGTH IS CUT FROM A ONE–PIECE EXTRUSION AND HAS THE GEOMETRIC SHAPE OF THE TWO–PIECE BASE PLATE

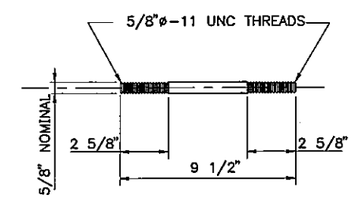

ANCHOR BOLT

3"=1'-0"

NOTE

IF CUT THREADS ARE USED, BODY DIAMETER SHALL BE NOT LESS THAN NOMINAL DIAMETER. IF ROLLED THREADS ARE USED, BODY DIAMETER SHALL BE NOT LESS THAN PITCH DIAMETER OF THE THREADS.

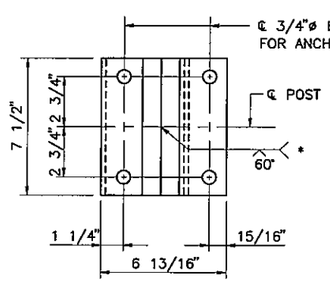

POST BASE

(BOTTOM VIEW)

3"=1'-0"

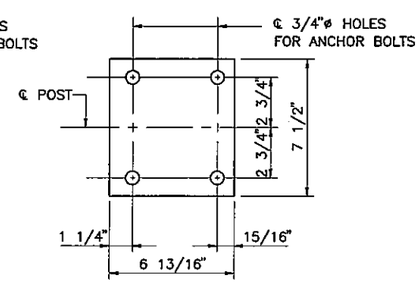

PREFORMED PAD

3"=1'-0"

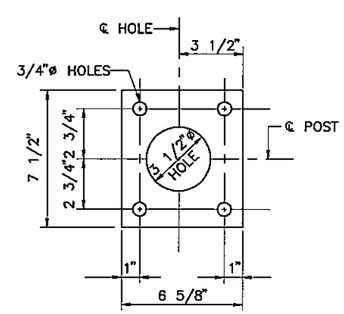

STEEL SPACER PLATE

(FOR ANCHORAGE)

3"=1'-0"

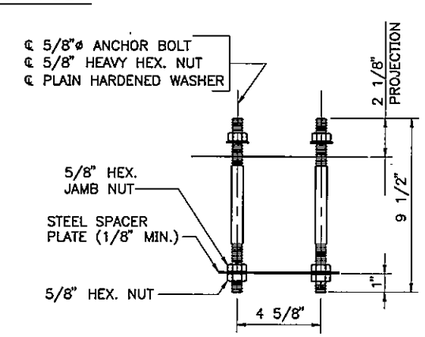

RAIL POST ANCHORAGE

(ASSEMBLY)

3"=1'-0"

NOTE

FOUR(4) BOLT, NUT AND WASHER SETS ARE REQUIRED PER ASSEMBLY, ALL HARDWARE SHALL BE GALVANIZED.

M:\09009\002\123\S5RAILMR.DWG 12/26/00 11:12

Scale: AS NOTED

No.	Revision	By	Date

Designed by:

HNTB

ARCHITECTS ENGINEERS PLANNERS

	By	Date		By	Date
Designed	CC	12/00	Checked	JRB	12/00
Drawn	RJC	12/00	In Charge of	RAL	12/00

HNTB CORPORATION
2 Thomas Drive
Westbrook, ME 04092
TEL (207) 774–5155
FAX (207) 772–7410

MAINE TURNPIKE AUTHORITY
MODERNIZATION AND WIDENING PROJECT

THINKING AHEAD The Widening

MAINLINE BRIDGE WIDENING
MOUSAM RIVER OVERPASS
ALUMINUM BRIDGE RAIL DETAILS

SHEET NUMBER: MR–S27

CONTRACT: 2001.05

XX OF XX

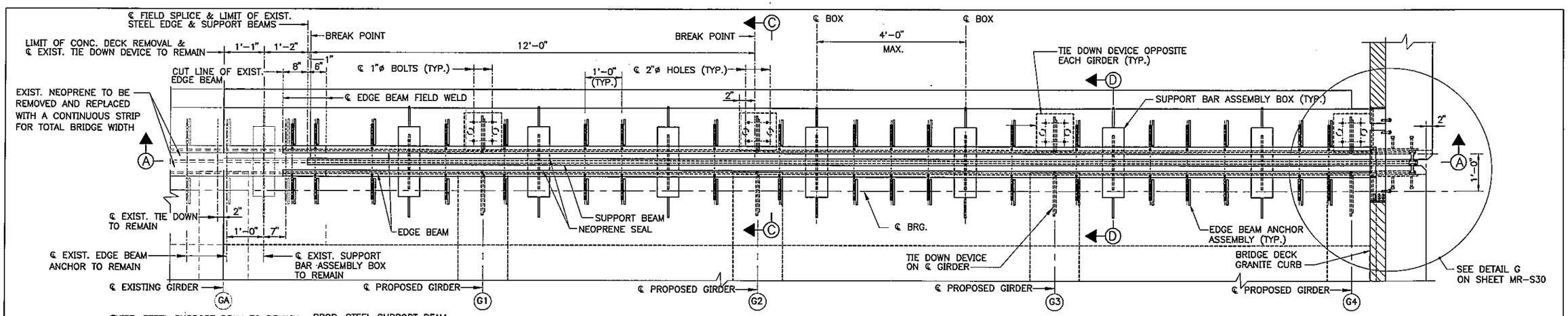

PLAN – PROPOSED SOUTHBOUND ROADWAY
3/4" = 1'-0"

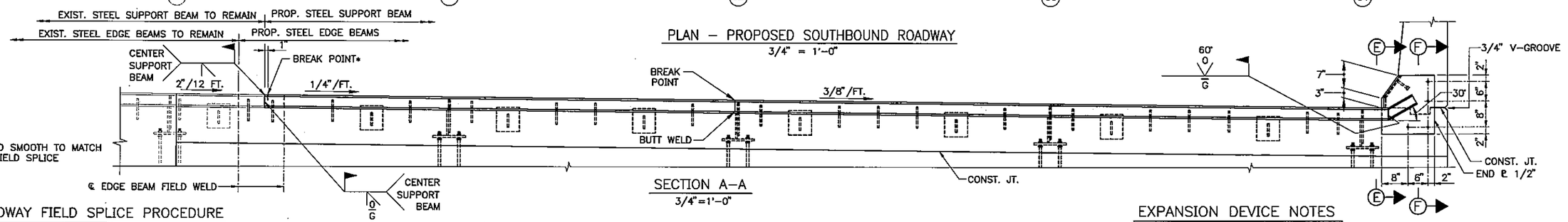

SECTION A–A
3/4"=1'-0"

ROADWAY FIELD SPLICE PROCEDURE

1. CUT THE TWO EXISTING EDGE BEAMS AS INDICATED.
2. FABRICATE THE PROPOSED STEEL CENTER SUPPORT BEAM TO FIT TO THE END OF THE EXISTING CENTER SUPPORT BEAM. THE TWO EDGE BEAMS ON THE MAIN EXPANSION DEVICE SHALL BE FABRICATED 6" SHORT OF THE FIELD SPLICE. THE TWO FILLER EDGE BEAMS SHALL BE FABRICATED 2" LONGER THAN REQUIRED AND FIELD FIT.
3. PREPARE THE ENDS OF EXISTING CENTER SUPPORT BEAM AND EDGE BEAMS. THE ENDS SHALL BE GROUND SMOOTH TO RECEIVE THE NEOPRENE. THE OUTSIDE EDGES SHALL BE BEVELLED TO RECEIVE A FULL PENETRATION WELD.
4. WELD THE PROPOSED CENTER SUPPORT BEAM TO THE EXISTING CENTER SUPPORT BEAM. ENSURE THE INSIDE EDGES REMAIN SMOOTH TO RECEIVE THE NEOPRENE.
5. WELD THE FILLER EDGE BEAMS IN PLACE. ENSURE THE INSIDE EDGES REMAIN SMOOTH TO RECEIVE THE NEOPRENE.

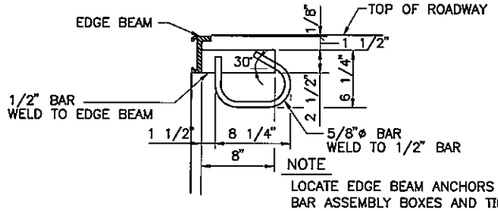

NOTE
LOCATE EDGE BEAM ANCHORS TO CLEAR SUPPORT BAR ASSEMBLY BOXES AND TIE DOWN DEVICES.

EDGE BEAM ANCHOR ASSEMBLY
1 1/2"=1'-0"

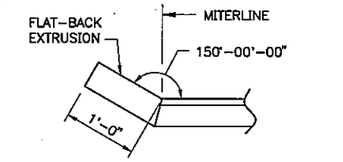

CURB LINE
N.T.S.

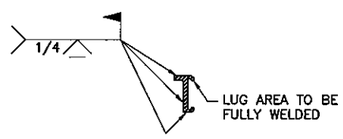

EDGE BEAM FIELD WELD
1 1/2"=1'-0"

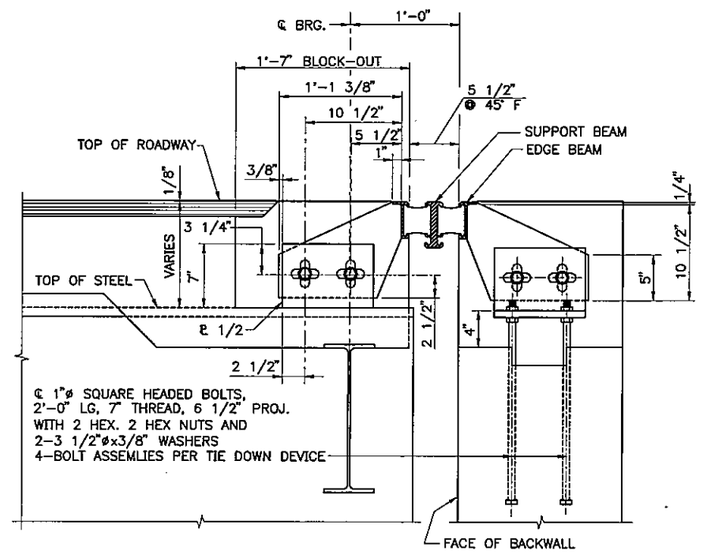

SECTION C–C
1 1/2"=1'-0"

EXPANSION DEVICE NOTES

1. EXPANSION DEVICE SHALL BE A WATSON BOWMAN ACME D600 TO MATCH EXISTING. SHOP DRAWINGS OF THE EXPANSION DEVICE SHALL BE SUBMITTED FOR APPROVAL BY THE ENGINEER. THE CONTRACTOR SHALL DETERMINE AS SOON AS POSSIBLE THE MATCH OF THE PROPOSED EXPANSION DEVICE TO THE EXISITNG BY COORDINATING WITH WATSON BOWMAN ACME AT THE START OF THE CONTRACT.
2. THE OPENING SHALL BE ADJUSTED TO MATCH THE EXISTING OPENING AT THE TIME OF INSTALLATION.
3. THE SLAB CONCRETE SHALL BE IN PLACE BEFORE THE EXPANSION DEVICE IS FIXED IN POSITION. NO ALLOWANCE FOR MOVEMENT DUE TO DEAD LOAD DEFLECTION IS NECESSARY. SEE SECTION 520.06 OF THE STANDARD SPECIFICATIONS.
4. ALL EXPOSED SURFACES OF ANGLES AND STEEL EDGE BEAMS SHALL BE FIELD PAINTED.
5. ALL STEEL COMPONENTS SHALL BE AASHTO M270 GRADE 36, UNLESS OTHERWISE NOTED.
6. ALL WELDS ARE 5/16" CONTINUOUS FILLETS, EXCEPT AS NOTED.
7. ALL STEEL SURFACES THAT WILL BE EMBEDDED IN CONCRETE SHALL BE COATED WITH AN EPOXY BONDING COMPOUND.
8. FOR SECTIONS D–D, E–E, F–F, AND DETAIL G, SEE SHEET NO. MR–S30.
9. FOR REINFORCING STEEL IN THE TOP OF BACKWALL AND DECK SLAB, SEE SHEET NOS. MR–S9 AND MR–S24 RESPECTIVELY.
10. THE ANGLES AND EXTRUSION ASSEMBLY SHALL BE FABRICATED AND SET CONFORMING TO THE ELEVATIONS AND SLOPES OF THE ABUTMENT BACKWALL AND THE BRIDGE DECK.
11. ALL REINFORCING SHALL BE EPOXY–COATED.
12. THE EXISTING NEOPRENE SEALS SHALL BE REMOVED. THE PROPOSED NEOPRENE SEAL SHALL EXTEND FROM THE EXISTING EAST FASCIA TO THE PROPOSED WEST FASCIA AS DETAILED. THE TWO–SEAL JOINT SHALL PROVIDE A MINIMUM MOVEMENT RATING OF 6".

Scale:AS NOTED

No.	Revision	By	Date

Designed by:

HNTB
ARCHITECTS ENGINEERS PLANNERS

	By	Date		By	Date
Designed	AAD	12/00	Checked	CC	12/00
Drawn	LS	12/00	In Charge of	RAL	12/00

HNTB CORPORATION
2 Thomas Drive
Westbrook, ME 04092
TEL (207) 774–5155
FAX (207) 772–7410

MAINE TURNPIKE AUTHORITY
MODERNIZATION AND WIDENING PROJECT

THINKING AHEAD The Widening

MAINLINE BRIDGE WIDENING
MOUSAM RIVER OVERPASS
SOUTH ABUTMENT
EXPANSION JOINT DETAILS

SHEET NUMBER: MR–S28
XX OF XXX

CONTRACT: 2001.05

M:\09009\002\123\S5EXP2MR.DWG 12/29/00 09:13

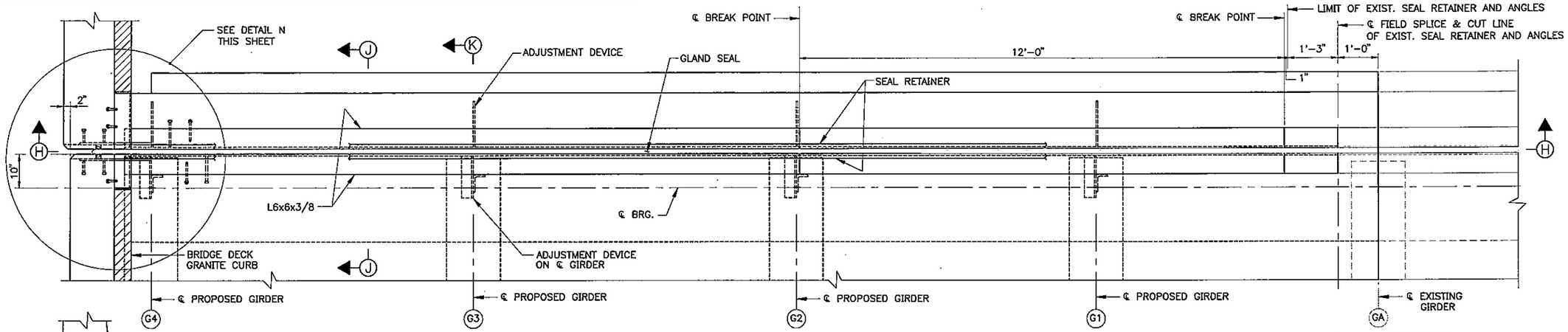

PLAN – PROPOSED SOUTHBOUND ROADWAY
3/4" = 1'-0"

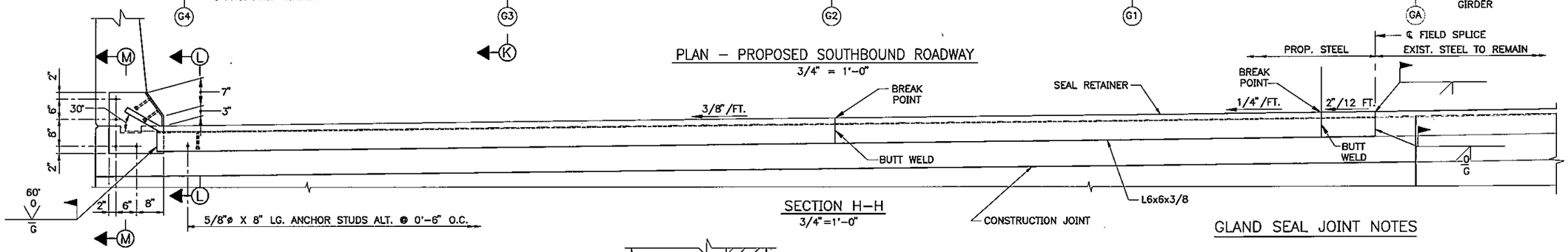

SECTION H–H
3/4"=1'-0"

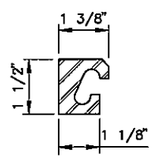

TYPE "E" EXTRUSION SEAL RETAINER
2"=1'-0"

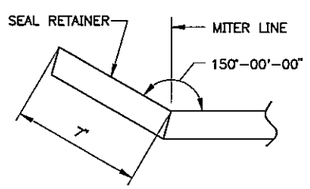

CURB LINE
3"=1'-0"

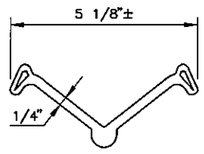

MOVEMENT RATING – 3"

S-300E GLAND
2"=1'-0"

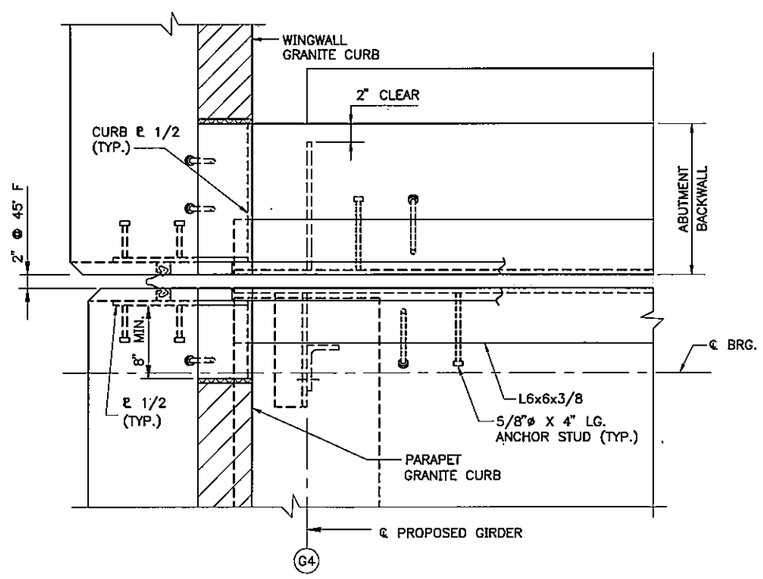

DETAIL N
1 1/2" = 1'-0"

GLAND SEAL JOINT NOTES

1. GLAND SEAL JOINT SHALL BE A WATSON BOWMAN ACME STRIP SEAL TYPE 'E' EXP. JOINT TO MATCH EXISTING. THE CONTRACTOR SHALL DETERMINE AS SOON AS POSSIBLE THE MATCH OF THE PROPOSED JOINT TO THE EXISTING JOINT BY COORDINATING WITH WATSON BOWMAN ACME AT THE START OF THE CONTRACT. SHOP DRAWINGS OF THE EXPANSION DEVICE SHALL BE SUBMITTED FOR APPROVAL BY THE ENGINEER.
2. THE OPENING SHALL BE ADJUSTED TO MATCH THE EXISTING OPENING AT THE TIME OF INSTALLATION.
3. THE SLAB CONCRETE SHALL BE IN PLACE BEFORE THE GLAND SEAL JOINT IS FIXED IN POSITION. NO ALLOWANCE FOR MOVEMENT DUE TO DEAD LOAD DEFLECTION IS NECESSARY. SEE SECTION 520.06 OF THE STANDARD SPECIFICATIONS.
4. ALL EXPOSED SURFACES OF ANGLES AND STEEL EDGE BEAMS SHALL BE FIELD PAINTED.
5. ALL STEEL COMPONENTS SHALL BE AASHTO M270 GRADE 36, UNLESS OTHERWISE NOTED.
6. ALL WELDS ARE 5/16" CONTINUOUS FILLETS, EXCEPT AS NOTED.
7. ALL STEEL SURFACES THAT WILL BE EMBEDDED IN CONCRETE SHALL BE COATED WITH AN EPOXY BONDING COMPOUND.
8. FOR SECTIONS J–J, K–K, L–L, AND M–M, SEE SHEET NO. MR–S30.
9. FOR REINFORCING STEEL IN TOP OF BACKWALL AND IN THE DECK SLAB, SEE SHEET NOS. MR–S10 AND MR–S24 RESPECTIVELY.
10. THE ANGLES AND EXTRUSION ASSEMBLY SHALL BE FABRICATED AND SET CONFORMING TO THE ELEVATIONS AND SLOPES OF THE ABUTMENT BACKWALL AND THE BRIDGE DECK.
11. ALL REINFORCING SHALL BE EPOXY–COATED.
12. THE EXISTING SEAL RETAINER AND ANGLES SHALL BE CUT AT THE LOCATION SHOWN ON THE PLAN.

M:\09009\002\123\S5EXP1MR.DWG 12/29/00 08:10

Scale:AS NOTED

No.	Revision	By	Date

Designed by:

HNTB
ARCHITECTS ENGINEERS PLANNERS

	By	Date		By	Date
Designed	AAD	12/00	Checked	CC	12/00
Drawn	LS	12/00	In Charge of	RAL	12/00

HNTB CORPORATION
2 Thomas Drive
Westbrook, ME 04092
TEL (207) 774–5155
FAX (207) 772–7410

MAINE TURNPIKE AUTHORITY
MODERNIZATION AND WIDENING PROJECT

THINKING AHEAD The Widening

MAINLINE BRIDGE WIDENING
MOUSAM RIVER OVERPASS
NORTH ABUTMENT
GLAND SEAL JOINT DETAILS

SHEET NUMBER: MR–S29
XX OF XXX

CONTRACT: 2001.05

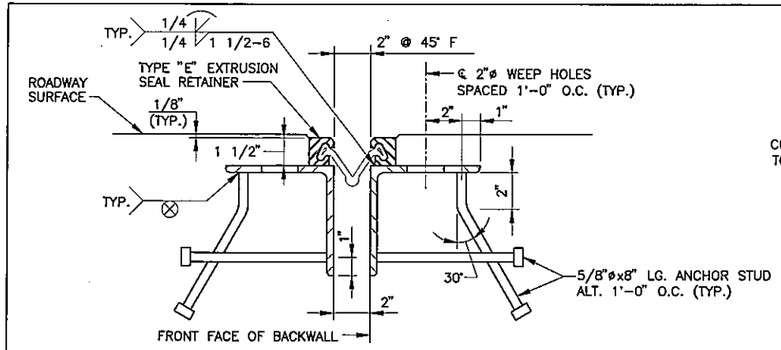

SECTION J-J
3"=1'-0"

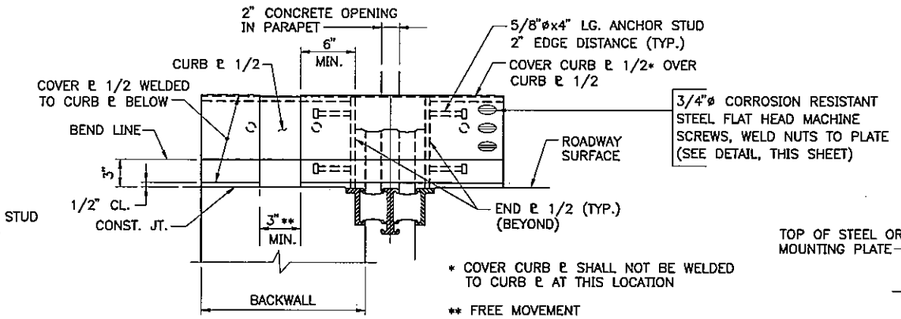

SECTION E-E
1 1/2"=1'-0"

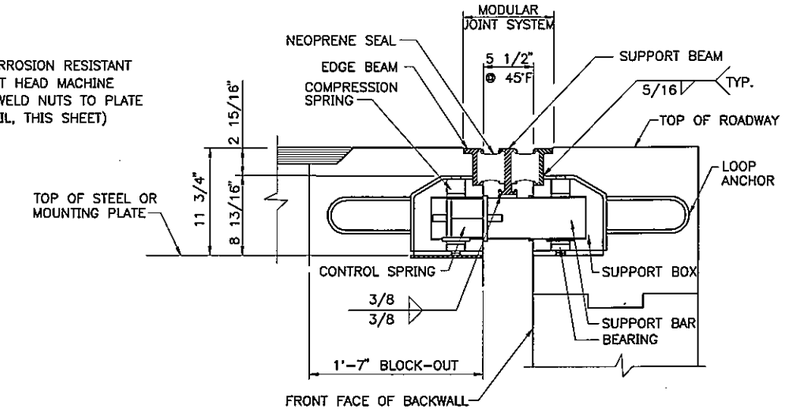

SECTION D-D
1 1/2"=1'-0"

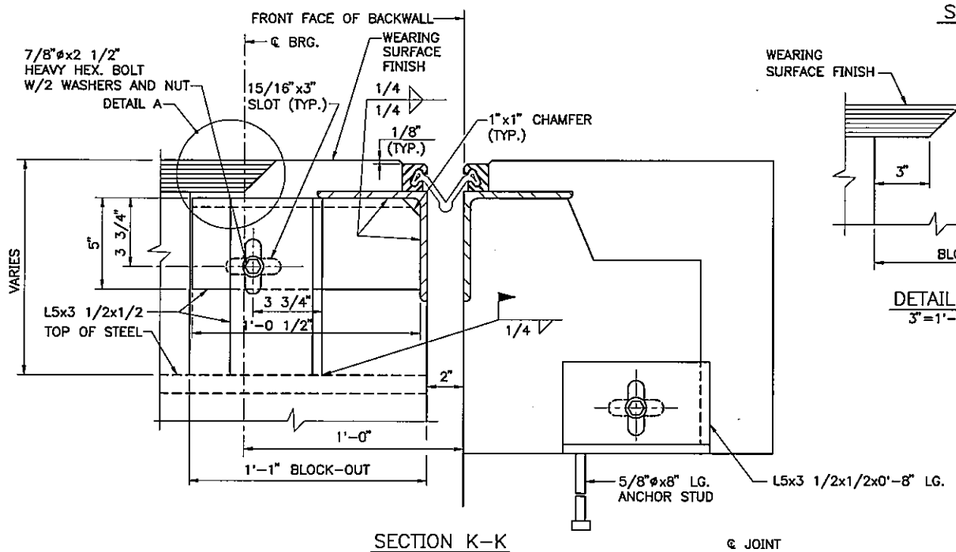

SECTION K-K
3"=1'-0"

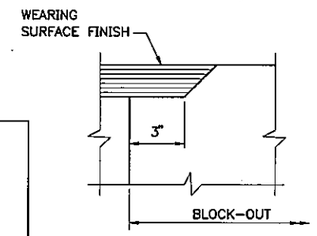

DETAIL A
3"=1'-0"

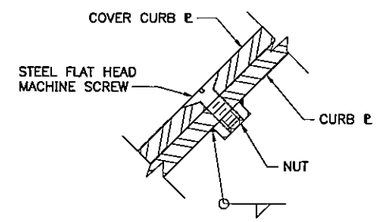

FLAT HEAD SCREW DETAIL
NOT TO SCALE

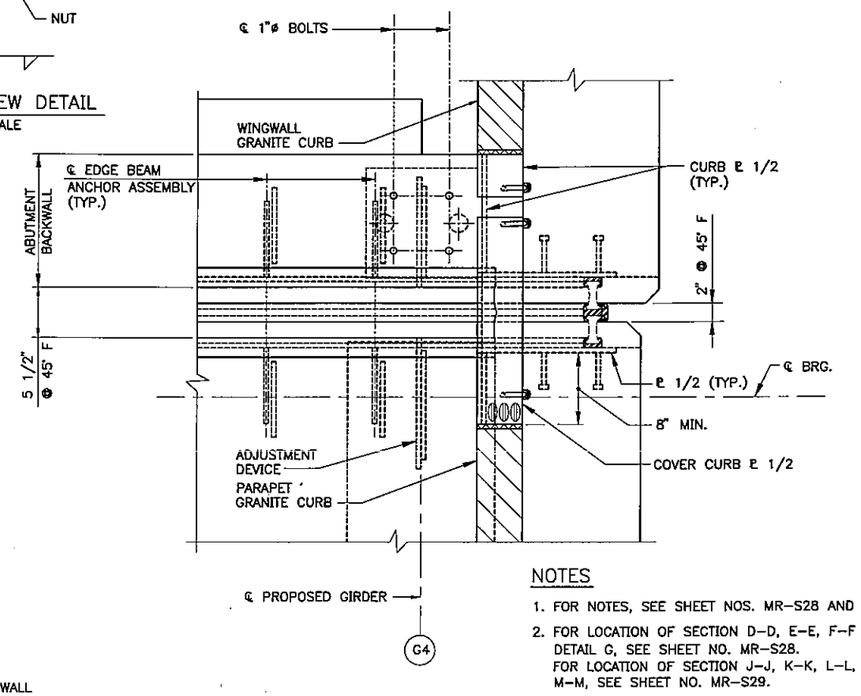

DETAIL G
1 1/2"=1'-0"

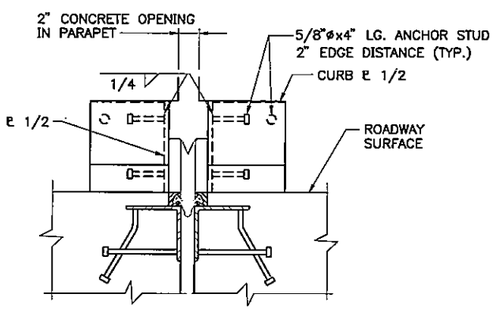

SECTION L-L
1 1/2"=1'-0"

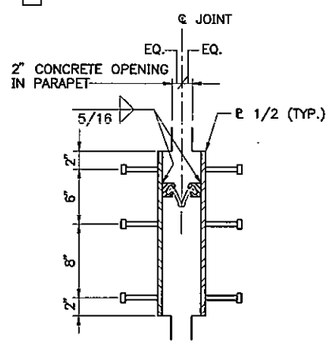

SECTION M-M
1 1/2"=1'-0"

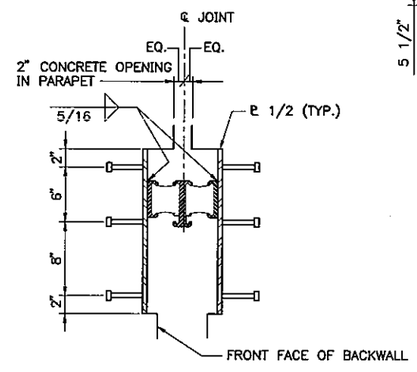

SECTION F-F
1 1/2"=1'-0"

NOTES

1. FOR NOTES, SEE SHEET NOS. MR-S28 AND MR-S29.
2. FOR LOCATION OF SECTION D-D, E-E, F-F AND DETAIL G, SEE SHEET NO. MR-S28.
   FOR LOCATION OF SECTION J-J, K-K, L-L, AND M-M, SEE SHEET NO. MR-S29.

M:\09009\002\123\S5MISC.DMR.DWG 12/29/00 07:01

Scale: AS NOTED

No.	Revision	By	Date

Designed by:

HNTB
ARCHITECTS ENGINEERS PLANNERS

	By	Date		By	Date
Designed	AAD	12/00	Checked	CC	12/00
Drawn	LS	12/00	In Charge of	RAL	12/00

HNTB CORPORATION
2 Thomas Drive
Westbrook, ME 04092
TEL (207) 774-5155
FAX (207) 772-7410

MAINE TURNPIKE AUTHORITY
MODERNIZATION AND WIDENING PROJECT

THINKING AHEAD The Widening

MAINLINE BRIDGE WIDENING
MOUSAM RIVER OVERPASS
MISCELLANEOUS DECK JOINT DETAILS

SHEET NUMBER: MR-S30
XX OF XXX

CONTRACT: 2001.05

MARK	SIZE	NO	LENGTH FT - IN	TYPE	A FT - IN	B FT - IN	C FT - IN	D FT - IN	INCR. FT - IN	REMARKS
DECK SLAB AND PARAPETS										
*S501	5	1318	32 - 1	113A						TRANS. DECK MAIN REINF.
*S502	5	669	1 - 6	113B						TRANS. DECK DOWEL-IN BAR **
*S503	5	684	39 - 0	STR						LONGIT. DECK SLAB
*S504	5	333	3 - 11	127	0 - 9	1 - 8	1 - 6			TRANS. WEST PARAPET
*S505	5	28	9 - 4	STR						LONG. PARAPET
*S506	5	168	15 - 8	STR						LONG. PARAPET
*S507	5	210	7 - 8	STR						LONG. PARAPET
*S508	5	66	3 - 11	115	0 - 6	0 - 11	1 - 6	1 - 2		LONG. DECK ENDS
*S509	5	16	32 - 1	113A						TRANS. DECK ENDS
*S510	5	66	4 - 4	115	0 - 6	0 - 11	1 - 11	1 - 2		LONG. DECK ENDS
*S511	5	14	4 - 0	STR						SCUPPERS
*S601	6	329	1 - 10	113B						TRANS. DECK DOWEL-IN BAR **
*S602	6	66	64 - 0	STR						LONG. DECK REINF OVER PIERS
*S603	6	666	4 - 5	118	3 - 5	1 - 0				TRANS. WEST PARAPET
*S604	6	333	3 - 7	105	0 - 8	1 - 3	1 - 2	1 - 8		TRANS. EAST PARAPET
*S605	6	333	3 - 1	118	2 - 5	0 - 8				TRANS. EAST PARAPET
APPROACH SLAB										
*AS401	4	32	28 - 3	STR						TRANS. DECK MAIN REINF.
*AS600	6	114	15 - 2	STR						TRANS. DECK DOWEL-IN BAR **
PIER 1 FOOTING										
PF701	7	44	11 - 4	110	9 - 6					FTG. TOP REINF.
PF904	9	56	12 - 4	110	9 - 6					FTG. BOT. REINF.
PF1101	11	48	14 - 7	118	12 - 7	2 - 0				FOOTING DOWEL
PIER 1 CAP AND COLUMN										
P401	4	10	10 - 10	100	2 - 6	2 - 6	0 - 5			TIE-STRUT STIRRUPS
*P402	4	16	5 - 4	101	2 - 4	1 - 6				BEARING PAD
*P403	4	12	5 - 8	101	2 - 8	1 - 6				BEARING PAD
P501	5	222	13 - 0	100	3 - 6	2 - 6	0 - 6			COLUMN STIRRUPS
P502	5	222	9 - 0	100	1 - 6	2 - 6	0 - 6			COLUMN STIRRUPS
P503	5	222	9 - 2	100	0 - 7	3 - 6	0 - 6			COLUMN STIRRUPS
P504	5	380	3 - 6	114	2 - 6	0 - 6	0 - 4	0 - 6		COLUMN STIRRUPS
*P505	5	6	5 - 4	101	2 - 4	1 - 6				PIER END BLOCK
*P506	5	22	16 - 0	100	2 - 6	5 - 0	0 - 6			PIER CAP STIRRUPS
*P507	5	22	13 - 6	100	1 - 3	5 - 0	0 - 6			PIER CAP STIRRUPS
*P508	5	12	11'-4" TO 12'-10"	100	2 - 6	2'-8" TO 3'-5"	0 - 6		0 - 4 1/2	PIER CAP STIRRUPS (VARIES)
*P509	5	12	13'-8" TO 15'-2"	100	2 - 6	3'-10" TO 4'-7"	0 - 6		0 - 4 1/2	PIER CAP STIRRUPS (VARIES)
P510	5	36	3 - 4	118	1 - 8	1 - 8				PIER COLUMN CONE REINF
P511	5	72	3 - 0	119	1 - 8	1 - 4	0 - 11			PIER COLUMN CONE REINF
P512	5	10	17 - 3	STR						PIER COLUMN CONE REINF
P513	5	6	4 - 9	104	1 - 9	1 - 6	1 - 1	1 - 6		PIER COLUMN CONE REINF
P601	6	2	19 - 6	STR						TIE-STRUT SKIN
P602	6	12	8 - 6	STR						TIE-STRUT CHAMFER
*P603	6	2	30 - 6	STR						PIER CAP SKIN
*P604	6	2	33 - 1	STR						PIER CAP SKIN
*P605	6	4	34 - 4	STR						PIER CAP SKIN
*P606	6	6	3 - 3	109	2 - 3	0 - 6	0 - 4	0 - 6		PIER CAP END (E=0'-5")
P801	8	48	18 - 0	STR						COLUMN REINFORCEMENT
*P802	8	8	36 - 2	104	27 - 4	4 - 5	2 - 9	4 - 5		PIER CAP BOTTOM REINF.
P901	9	16	19 - 6	STR						TIE-STRUT REINFORCEMENT
*P902	9	9	37 - 2	110	34 - 4					PIER CAP TOP REINFORCEMENT
*P903	9	4	34 - 4	STR						PIER CAP TOP REINFORCEMENT
P1102	11	48	28 - 3	STR						COLUMN REINFORCEMENT

MARK	SIZE	NO	LENGTH FT - IN	TYPE	A FT - IN	B FT - IN	C FT - IN	D FT - IN	INCR. FT - IN	REMARKS
END POSTS										
*EP501	5	18	4 - 8 3/4	102	1 - 6	0 - 8 3/4	2 - 6			VERTICAL - BARRIER
*EP502	5	16	5 - 0	118	4 - 6	0 - 6				HORIZ. BAR TOP
*EP503	5	2	2 - 5	118	2 - 0	0 - 5				VERTICAL - BARRIER - BLOCKOUT
*EP504	5	12	2 - 10	111	2 - 0	0 - 10	0 - 1			VERTICAL - BARRIER
*EP505	5	6	2 - 10	111	2 - 0	0 - 10				VERTICAL - BARRIER
*EP506	5	4	7 - 1	104	4 - 4	2 - 9	1 - 0			HORIZ BAR TOP
*EP507	5	2	4 - 10	STR						HORIZ. BAR TOP INSIDE
*EP508	5	2	5 - 4	118	4 - 10	0 - 6				HORIZ. BAR TOP OUTSIDE
*EP509	5	4	5 - 9	STR						HORIZ. BAR TOP INSIDE
*EP510	5	6	6 - 3	118	5 - 9	0 - 6				HORIZ. BAR TOP OUTSIDE
*EP511	5	4	7 - 0	118	6 - 2	0 - 10				VERT. BAR BELOW C.J. OUTSIDE
*EP512	5	10	8 - 5	118	7 - 2	1 - 3				VERT. BAR BELOW C.J. OUTSIDE
*EP601	6	8	4 - 0	STR						VERT. DOWEL IN TOP OF BKWL
*EP602	6	4	4 - 1	118	2 - 9	1 - 4				VERT. DOWEL IN TOP OF BKWL
*EP603	6	12	5 - 1	118	2 - 8	2 - 5				VERT. BENT BAR AT START T&B
*EP604	6	2	3 - 6	118	1 - 1	2 - 5				VERT. BENT BAR AT START BOT.
*EP607	6	12	4 - 2	STR						HORIZ. DOWEL IN BF BKWL
*EP608	6	8	10 - 1	101	1 - 5	4 - 4				HORIZ. BAR BELOW CJ
*EP609	6	10	5 - 4	101	2 - 8	1 - 4				VERT. BAR BELOW CJ
*EP610	6	10	6 - 3	104	4 - 5	1 - 10	0 - 5			HORIZ. BAR BELOW CJ
*EP611	6	10	7 - 0	118	6 - 3	0 - 9				HORIZ. BAR BELOW CJ
*EP612	6	16	5 - 3	108	4 - 10					VERT. HOOK BELOW CJ
*EP613	6	2	5 - 1	108	4 - 8					VERT. HOOK BELOW CJ
*EP614	6	4	4 - 2	101	2 - 8	0 - 9				VERT. BAR BELOW CJ
PIER 2 FOOTING										
PF702	7	20	13 - 4	110	11 - 6					FTG. TOP REINF. (TRANSVERSE)
PF703	7	26	10 - 4	110	8 - 6					FTG. TOP REINF. (LONGIT)
PF905	9	34	14 - 4	110	11 - 6					FTG. BOT. REINF. (TRANSVERSE)
PF906	9	30	11 - 4	110	8 - 6					FTG. BOT. REINF. (LONGIT)
PF1102	11	48	13 - 9	118	11 - 9	2 - 0				FOOTING DOWEL
PIER 2 CAP AND COLUMN										
P401	4	10	10 - 10	100	2 - 6	2 - 6	0 - 5			TIE-STRUT STIRRUPS
*P402	4	16	5 - 4	101	2 - 4	1 - 6				BEARING PAD
*P403	4	12	5 - 8	101	2 - 8	1 - 6				BEARING PAD
P501	5	204	13 - 0	100	3 - 6	2 - 6	0 - 6			COLUMN STIRRUPS
P502	5	204	9 - 0	100	1 - 6	2 - 6	0 - 6			COLUMN STIRRUPS
P503	5	204	9 - 2	100	0 - 7	3 - 6	0 - 6			COLUMN STIRRUPS
P504	5	190	3 - 6	114	2 - 6	0 - 6	0 - 4	0 - 6		COLUMN STIRRUPS
*P505	5	6	5 - 4	101	2 - 4	1 - 6				PIER END BLOCK
*P506	5	22	16 - 0	100	2 - 6	5 - 0	0 - 6			PIER CAP STIRRUPS
*P507	5	22	13 - 6	100	1 - 3	5 - 0	0 - 6			PIER CAP STIRRUPS
*P508	5	12	11'-4" TO 12'-10"	100	2 - 6	2'-8" TO 3'-5"	0 - 6		0 - 4 1/2	PIER CAP STIRRUPS (VARIES)
*P509	5	12	13'-8" TO 15'-2"	100	2 - 6	3'-10" TO 4'-7"	0 - 6		0 - 4 1/2	PIER CAP STIRRUPS (VARIES)
P510	5	20	3 - 4	118	1 - 8	1 - 8				PIER COLUMN CONE REINF
P511	5	40	3 - 0	119	1 - 8	1 - 4	0 - 11			PIER COLUMN CONE REINF
P513	5	6	4 - 9	104	1 - 9	1 - 6	1 - 1	1 - 6		PIER COLUMN CONE REINF
P514	5	10	8 - 10	STR						PIER COLUMN CONE REINF
P601	6	2	19 - 6	STR						TIE-STRUT SKIN
P602	6	12	8 - 6	STR						TIE-STRUT CHAMFER
*P603	6	2	30 - 6	STR						PIER CAP SKIN
*P604	6	2	33 - 1	STR						PIER CAP SKIN
*P605	6	4	34 - 4	STR						PIER CAP SKIN
*P606	6	6	3 - 3	109	2 - 3	0 - 6	0 - 4	0 - 6		PIER CAP END (E=0'-5")
*P802	8	8	36 - 2	104	27 - 4	4 - 5	2 - 9	4 - 5		PIER CAP BOTTOM REINF.
P901	9	16	19 - 6	STR						TIE-STRUT REINFORCEMENT
*P902	9	9	37 - 2	110	34 - 4					PIER CAP TOP REINFORCEMENT
*P903	9	4	34 - 4	STR						PIER CAP TOP REINFORCEMENT
P907	9	48	18 - 0	STR						PIER COLUMN REINF.
P1102	11	48	21 - 2	STR						PIER COLUMN REINF.

Scale:

No.	Revision	By	Date

Designed by:

HNTB
ARCHITECTS ENGINEERS PLANNERS

	By	Date		By	Date
Designed	CC	12/00	Checked	AAD	12/00
Drawn	CC	12/00	In Charge of	RAL	12/00

HNTB CORPORATION
2 Thomas Drive
Westbrook, ME 04092
TEL (207) 774-5155
FAX (207) 772-7410

MAINE TURNPIKE AUTHORITY
MODERNIZATION AND WIDENING PROJECT

THINKING AHEAD The Widening

MAINLINE BRIDGE WIDENING
MOUSAM RIVER OVERPASS
REINFORCING STEEL SCHEDULE I

SHEET NUMBER: MR-S31
XXX OF XXX

CONTRACT: 2001.05

M:\09009\002\123\S6RESH1MR.DWG 12/26/00 11:19

MARK	SIZE	NO	LENGTH FT IN	TYPE	A FT IN	B FT IN	C FT IN	D FT IN	INCR. FT IN	REMARKS
SOUTH ABUTMENT										
*A501	5	8	3 - 9	STR						CONDUIT OPENING
A601	6	16	13 - 4	114	5 - 8	1 - 8	1 - 10	6 - 0		BASE VERITICAL
*A602	6	16	7 - 7	109	3 - 8	1 - 8	0 - 8	2 - 3		BASE VERITICAL (E=2'-1")
A603	6	8	21 - 7	STR						BASE HORIZONTAL
*A604	6	16	8 - 6	STR						BASE VERITICAL
*A605	6	46	8 - 6	118	7 - 4	1 - 2				STEM VERITICAL
*A606	6	23	4 - 6	STR						STEM VERITICAL
*A607	6	20	3 - 8	109	0 - 8	1 - 8	1 - 3	1 - 4		APPROACH SEAT VERIT. (E=1'-3")
*A608	6	12	30 - 0	STR						STEM HORIZTONAL
*A609	6	2	27 - 10	STR						APPROACH SEAT HORIZTONAL
*A610	6	9	4 - 0	STR						BASE TOP
*A611	6	2	32 - 3	STR						TOP OF STEM HORIZ.
A612	6	3	4 - 6	118	1 - 0	3 - 6				BASE END VERT.
*A613	6	4	5 - 7	118	4 - 7	1 - 0				DOWEL BARS IN BARRIER
*A614	6	7	4 - 6	STR						DOWEL BARS IN BASE
*A615	6	4	4 - 6	118	3 - 4	1 - 2				TOP OF STEM VERT.
A901	9	4	3 - 1	119	1 - 6	1 - 7	1 - 6	0 - 4		BASE DOWEL
A902	9	11	21 - 7	STR						BASE HORIZONTAL
*A903	9	7	30 - 0	STR						BASE HORIZONTAL
S.W. WINGWALL										
*W501	5	23	4 - 8 3/4	102	1 - 6	0 - 8 3/4	2 - 6			VERTICAL - BARRIER
*W502	5	2	20 - 11	STR						HORIZONTAL - BARRIER
*W503	5	2	2 - 5	118	2 - 0	0 - 5				VERTICAL - BARRIER - BLOCKOUT
*W504	5	20	2 - 10	111	2 - 0	0 - 10	0 - 1			VERTICAL - BARRIER
*W505	5	3	2 - 10	111	2 - 0	0 - 10				VERTICAL - BARRIER
*W506	5	1	22 - 4	119	19 - 8	2 - 8	2 - 6			HORIZONTAL - BARRIER
*W507	5	1	21 - 3	119	18 - 7	2 - 8	2 - 6			HORIZONTAL - BARRIER
*W508	5	6	22 - 0	STR						HORIZONTAL - BARRIER
WA501	5	22	3 - 0	STR						VERTICAL - DOWEL
*WA502	5	22	13 - 0	STR						VERTICAL - STEM
WA503	5	24	20 - 8	STR						HORIZONTAL - STEM
WA601	6	22	11 - 3	118	10 - 3	1 - 0				VERTICAL - STEM
WA602	6	22	6 - 2	118	5 - 2	1 - 0				VERTICAL - FOOTING
WA603	6	20	20 - 8	STR						HORIZONTAL - FOOTING
*WA604	6	22	5 - 1	108	4 - 8					VERTICAL - STEM
WA611	6	16	6 - 0	STR						HORIZONTAL - FOOTING
WA612	6	14	5 - 2	118	4 - 2	1 - 0				HORIZONTAL - BACKWALL
WA613	6	3	6 - 0	STR						HORIZONTAL - ABUTMENT
WA614	6	3	8'-3" TO 8'-11"	118	7'-3" TO 7'-11"	1 - 0			4	HORIZONTAL - ABUTMENT
WA701	7	44	8 - 8	STR						HORIZONTAL - FOOTING

MARK	SIZE	NO	LENGTH FT IN	TYPE	A FT IN	B FT IN	C FT IN	D FT IN	INCR. FT IN	REMARKS
NORTH ABUTMENT										
*B501	5	8	3 - 9	STR						CONDUIT OPENING
B601	6	16	13 - 4	114	5 - 8	1 - 8	1 - 10	6 - 0		BASE VERITICAL
*B602	6	16	7 - 7	109	3 - 8	1 - 8	0 - 8	2 - 3		BASE VERITICAL (E=2'-1")
B603	6	8	21 - 7	STR						BASE HORIZONTAL
*B604	6	16	8 - 6	STR						BASE VERITICAL
*B605	6	46	8 - 6	118	7 - 4	1 - 2				STEM VERITICAL
*B606	6	23	4 - 6	STR						STEM VERITICAL
*B607	6	20	3 - 8	109	0 - 8	1 - 8	1 - 3	1 - 4		APPROACH SEAT VERIT. (E=1'-3")
*B608	6	12	30 - 0	STR						STEM HORIZTONAL
*B609	6	2	27 - 10	STR						APPROACH SEAT HORIZTONAL
*B610	6	9	4 - 0	STR						BASE TOP
*B611	6	2	32 - 3	STR						TOP OF STEM HORIZ.
B612	6	3	4 - 6	118	1 - 0	3 - 6				BASE END VERT.
*B613	6	4	5 - 7	118	4 - 7	1 - 0				DOWEL BARS IN BARRIER
*B614	6	7	4 - 3	STR						DOWEL BARS IN BASE
*B615	6	2	4 - 6	118	3 - 4	1 - 2				TOP OF STEM VERT.
B901	9	4	3 - 1	119	1 - 6	1 - 7	1 - 6	0 - 4		BASE DOWEL
B902	9	11	21 - 7	STR						BASE HORIZONTAL
*B903	9	7	30 - 0	STR						BASE HORIZONTAL
N.W. WINGWALL										
*W501	5	23	4 - 8 3/4	102	1 - 6	0 - 8 3/4	2 - 6			VERTICAL - BARRIER
*W502	5	2	20 - 11	STR						HORIZONTAL - BARRIER
*W503	5	2	2 - 5	118	2 - 0	0 - 5				VERTICAL - BARRIER - BLOCKOUT
*W504	5	20	2 - 10	111	2 - 0	0 - 10	0 - 1			VERTICAL - BARRIER
*W505	5	3	2 - 10	111	2 - 0	0 - 10				VERTICAL - BARRIER
*W506	5	1	22 - 4	119	19 - 8	2 - 8	2 - 6			HORIZONTAL - BARRIER
*W507	5	1	21 - 3	119	18 - 7	2 - 8	2 - 6			HORIZONTAL - BARRIER
*W508	5	6	22 - 0	STR						HORIZONTAL - BARRIER
WB501	5	22	3 - 0	STR						VERTICAL - DOWEL
*WB502	5	22	13 - 4	STR						VERTICAL - STEM
WB503	5	24	20 - 8	STR						HORIZONTAL - STEM
WB601	6	22	11 - 3	118	10 - 3	1 - 0				VERTICAL - STEM
WB602	6	22	6 - 2	118	5 - 2	1 - 0				VERTICAL - FOOTING
WB603	6	20	20 - 8	STR						HORIZONTAL - FOOTING
*WB604	6	22	5 - 1	108	4 - 8					VERTICAL - STEM
WB611	6	16	6 - 0	STR						HORIZONTAL - FOOTING
WB612	6	14	5 - 2	118	4 - 2	1 - 0				HORIZONTAL - BACKWALL
WB613	6	3	6 - 0	STR						HORIZONTAL - ABUTMENT
WB614	6	3	8'-3" TO 8'-11"	118	7'-3" TO 7'-11"	1 - 0			4	HORIZONTAL - ABUTMENT
WB701	7	44	8 - 8	STR						HORIZONTAL - FOOTING

* EPOXY-COATED BAR

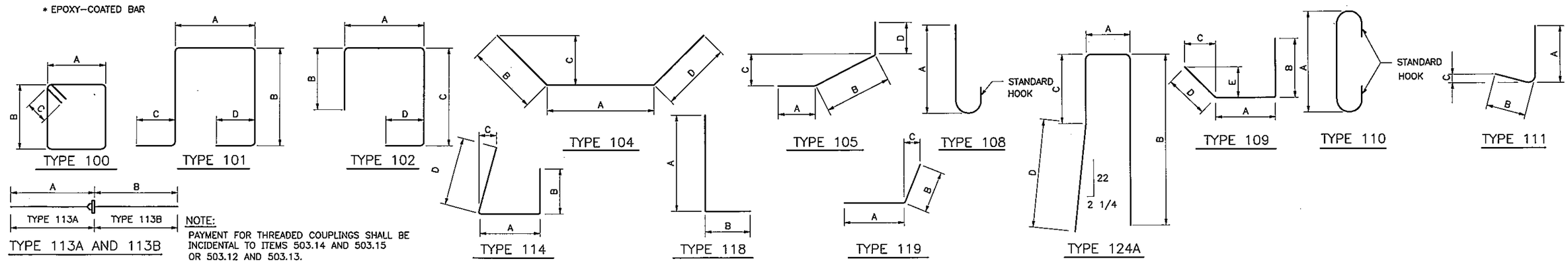

NOTE:
PAYMENT FOR THREADED COUPLINGS SHALL BE INCIDENTAL TO ITEMS 503.14 AND 503.15 OR 503.12 AND 503.13.

Scale:

No.	Revision	By	Date

Designed by:

HNTB
ARCHITECTS ENGINEERS PLANNERS

	By	Date		By	Date
Designed	CC	12/00	Checked	AAD	12/00
Drawn	CC	12/00	In Charge of	RAL	12/00

HNTB CORPORATION
2 Thomas Drive
Westbrook, ME 04092
TEL (207) 774-5155
FAX (207) 772-7410

MAINE TURNPIKE AUTHORITY
MODERNIZATION AND WIDENING PROJECT

THINKING AHEAD The Widening

MAINLINE BRIDGE WIDENING
MOUSAM RIVER OVERPASS
REINFORCING STEEL SCHEDULE II

SHEET NUMBER: MR-S32
XXX OF XXX

CONTRACT: 2001.05

M:\09009\002\123\S6RESH2MR.DWG 12/26/00 11:21