Date:12/12/2014

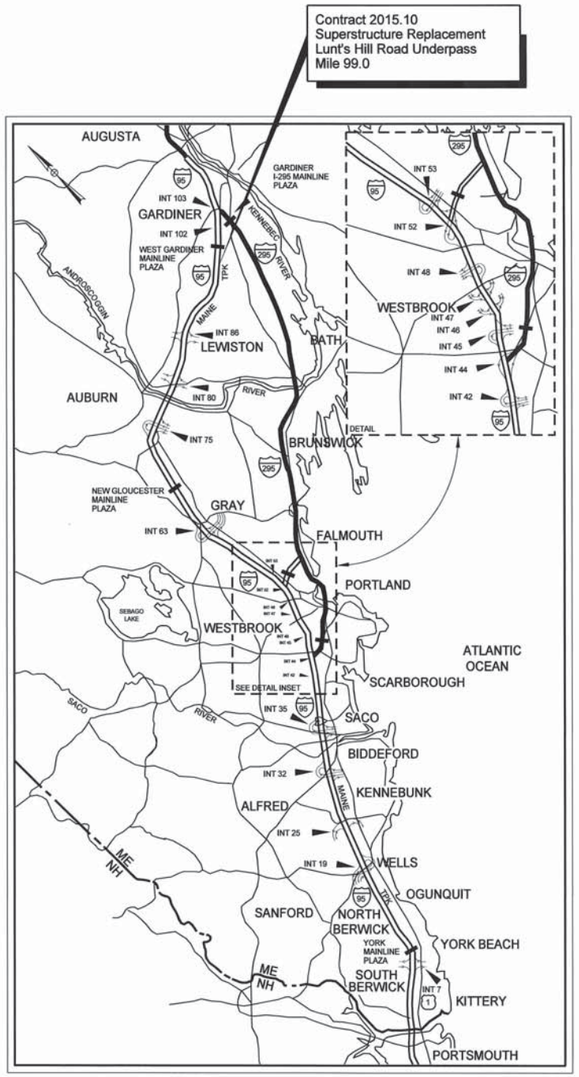

LOCATION MAP

MAINE TURNPIKE

THE GOLD STAR
MEMORIAL HIGHWAY

MAINE TURNPIKE AUTHORITY

DANIEL E. WATHEN, CHAIR
JAMES F. CLOUTIER, VICE CHAIR
GERARD P. CONLEY, SR., MEMBER
JOHN E. DORITY, MEMBER
FREEMAN R. GOODRICH, MEMBER
ROBERT D. STONE, MEMBER
KAREN S. DOYLE, EX-OFFICIO MEMBER

S. PETER MILLS, EXECUTIVE DIRECTOR

CONTRACT 2015.10
SUPERSTRUCTURE REPLACEMENT
LUNT'S HILL ROAD UNDERPASS
MILE 99.0

INDEX OF SHEETS

SHEET NO.	DESCRIPTION
1	Title Sheet
2	Estimated Quantities and Earthwork
3	General Notes
4	Typical Sections
5	Typical Details
6	Fencing Details
7 to 9	General Plan (3 Sheets)
10	Profile
11 to 26	Cross Sections (16 Sheets)
27	Disturbance Impact Plan
28	Detour Plan and Sign Summary
29 to 30	Work Zone Plans (2 Sheets)
31	Bridge Plan and Elevation
32	Bridge Survey Layout Plan
33	Abutment No. 1 Removal
34	Abutment No. 1 Modifications
35	Abutment No. 1 Reinforcement
36	Abutment No. 2 Removal
37	Abutment No. 2 Modifications
38	Abutment No. 2 Reinforcement
39	Abutment Wingwalls Reinforcement
40	Pier No. 1 Repair and Modifications
41	Pier Cap No. 1 Reinforcement
42	Pier No. 2 Repair and Modifications
43	Pier Cap No. 2 Reinforcement
44	Pier No. 3 Repair and Modifications
45	Pier Cap No. 3 Reinforcement
46	Abutment Bearing Details
47	Pier Bearing Details
48	Superstructure Section
49	Framing Plan and Girder Elevation
50	Diaphragm Details
51	Field Splice and Stress Diagram
52	Miscellaneous Steel Details
53	Table of Deflections and Bottom of Slab Elevations
54	Camber Ordinates and Diagram
55 to 56	Deck Reinforcement (2 Sheets)
57 to 58	Curtain Wall Details (2 Sheets)
59	Bridge Rail Details
60	Bridge Rail Transition
61	Snow Fence Details
62	Sign Support Structure Details
63	Reinforcing Steel Schedule
64	Right of Way Map
65 to 76	As-Builts and Standard Details (12 Sheets)

Contract 2015.10

APPROVED:

MAINE TURNPIKE AUTHORITY

Peter S. Merfeld — 12-16-14
PETER S. MERFELD, P.E. - CHIEF OPERATIONS OFFICER — DATE

Stephen R. Tartre — 12/16/14
STEPHEN R. TARTRE, P.E., - DIRECTOR OF ENGINEERING & BUILDING MAINTENANCE — DATE

STATE OF MAINE
TIMOTHY S. BRYANT
No. 12090
LICENSED
PROFESSIONAL ENGINEER

VHB Vanasse Hangen Brustlin, Inc.

Timothy S. Bryant — 12-12-2014
Timothy S. Bryant, P.E.
Consultant Project Manager — DATE

Filename: ...\st\planset\001_title_01.dgn

ESTIMATED QUANTITIES

ITEM NO.	DESCRIPTION		QUANTITY	UNIT
202.10	Removing Existing Superstructure - Property of Contractor		1	LS
202.17	Removing Existing Structural Concrete	(35 CY)*	1	LS
202.202	Removing Pavement Surface		140	SY
203.20	Common Excavation		845	CY
203.24	Common Borrow		930	CY
203.25	Granular Borrow		80	CY
304.10	Aggregate Subbase Course - Gravel		330	CY
403.210	Hot Mix Asphalt, 9.5 mm Nominal Maximum Size		170	TON
403.213	Hot Mix Asphalt, 12.5 mm Nominal Maximum Size, Base		130	TON
409.15	Bituminous Tack Coat, Applied		40	GAL
419.30	Sawing Bituminous Pavement		55	LF
502.21	Structural Concrete, Abutments and Retaining Walls		31	CY
502.23	Structural Concrete Piers		22	CY
502.26	Structural Concrete Superstructure Slab on Steel Bridges	(157 CY)*	1	LS
502.49	Structural Concrete Curbs and Sidewalk	(31 CY)*	1	LS
503.12	Reinforcing Steel, Fabricated and Delivered		500	LB
503.13	Reinforcing Steel, Placing		500	LB
503.14	Epoxy-Coated Reinforcing Steel, Fabricated and Delivered		64,100	LB
503.15	Epoxy-Coated Reinforcing Steel, Placing		64,100	LB
504.702	Structural Steel Fabricated and Delivered, Welded	(101,300 LB)*	1	LS
504.71	Structural Steel Erection	(101,300 LB)*	1	LS
505.09	Stud Welded Shear Connectors	(2,632 EA)*	1	LS
506.9102	Zinc-Rich Coating System (Shop Applied)		1	LS
507.0821	Steel Bridge Railing, 3 bar	(467 LF)*	1	LS
508.13	Membrane Waterproofing	(68 SY)*	1	LS
508.14	High Performance Waterproofing Membrane	(545 SY)*	1	LS
514.06	Curing Box for Concrete Cylinders		1	EA
515.201	Pigmented Protective Coating for Concrete Surfaces		300	SY
515.202	Clear Protective Coating for Concrete Surfaces		400	SY
518.20	Pier Repairs		360	SF
518.41	Epoxy Injection Crack Repair		7	LF
520.232	Expansion Device - Asphaltic Plug Joint		48	LF
523.52	Bearing Installation		20	EA
523.5402	Laminated Elastomeric Bearings, Expansion		8	EA
523.5404	PTFE Elastomeric Bearings, Expansion		12	EA
524.40	Protective Shielding - Steel Girders		870	SY
526.306	Temporary Concrete Barrier, Type I - Supplied by Authority	(460 LF)*	1	LS
527.34	Work Zone Crash Cushions - TL-3		2	UNIT
606.1728	W-Beam to 3-Bar Bridge Rail Transition		4	EA
606.244	Guardrail Type 3d - Single Rail, 7' Posts		1,563	LF
606.356	Permanent Flexible Delineator Post		4	EA
606.78	Low Volume Guardrail End - Type 3		4	EA
607.1631	Snow Fence		224	LF
607.17	Chain Link Fence - 6 ft		452	LF
607.23	Chain Link Fence Gate		2	EA
607.32	Bracing Assembly Type I - Metal Posts		18	EA
607.33	Bracing Assembly Type II - Metal Posts		8	EA
609.11	Vertical Curb Type I		121	LF
610.08	Plain Riprap		215	CY
610.18	Stone Ditch Protection		75	CY
613.319	Erosion Control Blanket		820	SY
615.07	Loam		190	CY
618.1411	Seeding Method Number 3, Plan Quantity		16	UNIT
619.1201	Mulch, Plan Quantity		16	UNIT
619.1202	Temporary Mulch		1	LS
620.58	Erosion Control Geotextile		435	SY
620.625	Cellular Confinement System		400	SY
627.712	4 Inch White or Yellow Pavement Marking Line		550	LF
629.05	Hand Labor, Straight Time		60	HR
631.12	All Purpose Excavator (Including Operator)		10	HR
631.171	Truck - Small (Including Operator)		20	HR
631.36	Foreman		20	HR
639.18	Field Office, Type A		1	EA
645.116	Reinstall Regulatory, Warning, Confirmation and Route Marker Assembly Sign		2	EA
645.135	Bridge Overpass Mounted Sign Support		2	EA
652.30	Flashing Arrow		2	EA
652.312	Type III Barricades		4	EA
652.33	Drum		132	EA
652.34	Cone		25	EA
652.35	Construction Signs		1,446	SF
652.361	Maintenance of Traffic Control Devices		1	LS
652.41	Portable-Changeable Message Sign		4	EA
652.45	Truck Mounted Attenuator		20	CD
656.50	Baled Hay, in place		10	EA
656.632	30 inch Temporary Silt Fence		2,830	LF
659.10	Mobilization		1	LS

* Quantities are Estimated Only

EARTHWORK SUMMARY - LUNT'S HILL ROAD

COMMON EXCAVATION FOR ESTIMATE

	Lunt's Hill Road
Common Excavation	155 CY
Grubbing in Fill	535 CY
Pavement Removal	155 CY
Subtotal	845 CY
Total Common Excavation	845 CY

AVAILABLE COMMON EXCAVATION FOR BORROW CALCULATIONS

	Lunt's Hill Road
(1) Total Common Excavation	845 CY
Deductions:	
Grubbing	535 CY
Existing Pavement Removal	155 CY
(2) Total Deductions:	690 CY
Total Available Common Excavation	155 CY
Total Available Structural Excavation	63 CY
Total Available Non-Rock Excavation	218 CY

FILL FOR BORROW CALCULATIONS

	Lunt's Hill Road
Common Fill (From Cross Section)	930 CY
Subtotal	930 CY
Total Fill	930 CY

COMPUTATION OF COMMON BORROW FOR ESTIMATE

	Lunt's Hill Road
(3) Total Fill	930 CY
Total Available Non-Rock Excavation	185 CY
(4) Total Available Excavation	185 CY
(5) Total Deficit	745 CY

Date:12/12/2014

Filename: ...\cad\st\planset\002_qnty_01.dgn

Scale: AS NOTED

No.	Revision	By	Date

Designed by:

Vanasse Hangen Brustlin, Inc.

CONSULTANT PROJECT MANAGER: T. Bryant

	By	Date		By	Date
Designed	GME	12/14	Checked	LSC	12/14
Drawn	CMD	12/14	In Charge of	TSB	12/14

VANASSE HANGEN BRUSTLIN, INC.
500 Southborough Dr.
Suite 105B
South Portland, ME 04106
TEL (207) 889-3150
FAX (207) 253-5596

MAINE TURNPIKE

THE GOLD STAR MEMORIAL HIGHWAY

MTA PROJECT MANAGER: Ralph Norwood

SUPERSTRUCTURE REPLACEMENT
LUNT'S HILL ROAD UNDERPASS

ESTIMATED QUANTITIES AND EARTHWORK

VHB: 55041.00
CONTRACT: 2015.10

SHEET NUMBER: 2

GENERAL CONSTRUCTION NOTES

1. All details shall be in conformance with Maine Department of Transportation (MaineDOT) 2002 Standard Details for Highways and Bridges with all updates, and MaineDOT Best Management Practices for Erosion and Sediment Control latest revision unless otherwise noted in these plans.

2. During construction, the road will be closed to traffic for a time period specified in the Special Provisions.

3. For construction limits and right of way lines, refer to General Plan. There are no permanent or temporary easements associated with this project. All work must be completed within the existing Right of Way.

4. Chain link fence gates shall be 3 feet wide single gates. A gate shall be located on each side of the turnpike roadway. Exact location of the gate shall be determined in the field by the Resident.

5. Connections to existing fence shall be incidental to the proposed fence items.

6. Existing ROW fence within the limits of work, as shown on the plans or as directed by the Resident, shall be removed and disposed. This work shall be incidental to the proposed fence items.

7. The Contractor shall submit his proposed staging area(s) and field trailer location to the Resident for approval prior to starting work.

8. All portions of the existing bridge superstructure are to be removed by and become the property of the Contractor, excluding the bearings which shall be delivered to the MTA Gardiner Maintenance yard. The steel portions of the existing bridge are coated with a lead-based paint system. The Contractor is responsible for the containment, proper management and disposal of all lead-contaminated hazardous waste generated by the process of demolishing the bridge.

9. Milling of existing pavement shown at end of project shall be paid under Item 202.202 Removing Pavement Surface.

10. For additional details referenced or not shown in these drawings, see the State of Maine, Department of Transportation Standard Details, Highways and Bridges, December 2002 with updates.

11. Copies of the As-Built plans are included in this contract for the Contractor's convenience. The completeness and accuracy of these plans is not guaranteed.

12. Chamfer all exposed concrete edges ¾" unless otherwise noted.

13. The proposed elevations are based on the NAVD 88 datum. The as-built plans are based on NGVD 29 datum.

14. Existing timber gutters in front of the abutments shall be removed as directed by the Resident. Payment will be considered incidental to Contract Items, See Special Provision Section 202.

15. The Contractor shall take all precautions necessary to avoid impacts to delineated wetland areas shown in these plans including ditches adjacent to Piers 1 and 3.

EARTHWORK NOTES

1. The clearing limits shall be 5' beyond and parallel to construction slope lines or as shown on the plans. The exact limits will be established in the field by the Resident. All clearing shall be within the existing ROW. This work shall be incidental to the Contract. All clearing shall be completed by April 2, 2015.

2. Individual trees within the slope limit lines or called to be removed on the plans shall be removed and disposed. This work shall be incidental to the contract.

3. Do not excavate for Aggregate Subbase Course where existing material is suitable as determined by the Resident.

4. Existing pavement removal in fill areas will be paid for under Item 203.20, Common Excavation. Shim material required for these areas below the subbase will be paid under Item 304.10, Aggregate Subbase Course - Gravel or Item 203.24, Common Borrow as shown in the typical section.

5. The Contractor shall minimize slope disturbances where possible, as directed by the Resident.

ABUTMENT NOTES

1. Reinforcing steel shall have a minimum concrete cover of 2 inches in walls.

2. Cover joints where waterstops are not required in accordance with Standard Detail 502(01).

3. Abutments and wingwalls shall be backfilled with Granular Borrow as shown in the plans.

GUARDRAIL NOTES

1. Composite offset blocks shall be used with guardrail type 3d.

2. At the end of each work day, all guardrail within work areas accessible to traffic shall have an approved crashworthy end treatment.

EROSION CONTROL NOTES

1. The anticipated erosion control devices are shown on the plans. The Contractor shall propose actual type and location of devices for approval by the Resident. Additional devices may be proposed by the Contractor to implement additional measures. Any additional measures approved by the Resident will be measured for payment.

2. Temporary seed shall be applied to all disturbed areas that will not be completed within 30 days.

3. All temporary and permanent erosion control devices shall be installed in accordance with the Maine Department of Transportation Best Management Practices.

4. Temporary stone check dams shall be installed in accordance with the Maine Department of Transportation Best Management Practices.

5. Erosion Control Blanket, Item 613.319 shall be installed on 2:1 slopes from the top to toe of slope. Loam and seed shall be placed prior to the installation of the erosion control blanket.

6. Place loam 4 inches deep on all new or reconstructed sideslopes or as directed by the Resident.

7. Newly disturbed earth shall be mulched by the end of each work day. Mulch shall be maintained daily. This work shall be paid under Item 619.1202 Temporary Mulch.

UTILITY NOTES

1. Existing utilities on these plans were compiled from field survey and various other sources. Locations are not guaranteed to be accurate nor is it guaranteed that all utilities are shown. No separate or additional compensation will be allowed to the Contractor due to any variance between the data shown on the plans and the actual field conditions encountered. No work shall be started until the owners of the various utilities are notified by the Contractor of the proposed construction. The Contractor shall contact Dig Safe (1-888-DIG-SAFE or 811) prior to starting work. In addition, Dig Smart of Maine shall be contacted prior to starting any work within MTA right-of-way. Contractor shall be responsible for any costs. Proof of utility location from both Dig Safe and Dig Smart (when applicable) shall be submitted prior to the commencement of any work.

2. All utility facilities shall be adjusted by the respective utilities unless noted.

3. The utilities involved in this contract are:
   - Central Maine Power (CMP)
   - Fairpoint Communications
   - Time Warner Cable

DRILLED AND ANCHORED BOLTS AND REINFORCING STEEL NOTES

1. The anchoring material shall be one of the products on the Maine Department of Transportation Prequalified List. Installation shall be in accordance with the Manufacturer's recommendations.

2. Drilling and grouting shall be incidental to Items 503.13 and 503.15.

Date:12/12/2014

Filename: ...\planset\003_gen_notes_01.dgn

Scale: AS NOTED

No.	Revision	By	Date

Designed by:

VHB Vanasse Hangen Brustlin, Inc.

CONSULTANT PROJECT MANAGER: T. Bryant

	By	Date		By	Date
Designed	GME	12/14	Checked	LSC	12/14
Drawn	CMD	12/14	In Charge of	TSB	12/14

VANASSE HANGEN BRUSTLIN, INC.
500 Southborough Dr.
Suite 105B
South Portland, ME 04106
TEL (207) 889-3150
FAX (207) 253-5596

MAINE TURNPIKE

THE GOLD STAR MEMORIAL HIGHWAY

MTA PROJECT MANAGER: Ralph Norwood

SUPERSTRUCTURE REPLACEMENT
LUNT'S HILL ROAD UNDERPASS

GENERAL NOTES

VHB: 55041.00 SHEET NUMBER: 3

CONTRACT: 2015.10

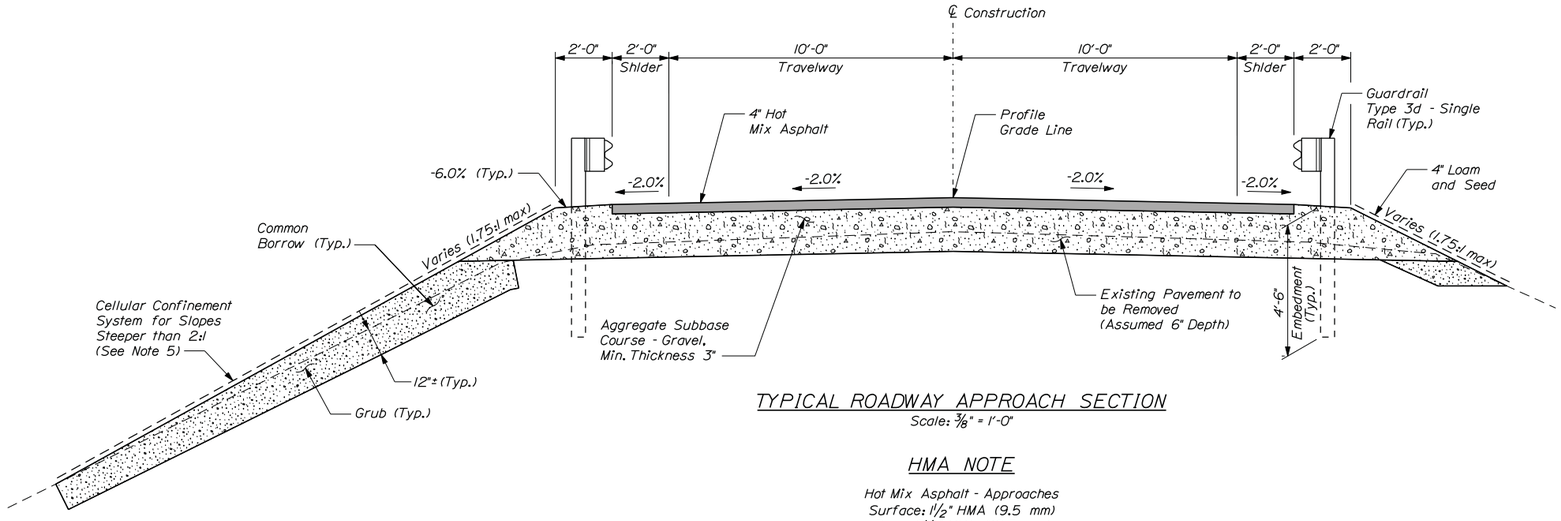

TYPICAL ROADWAY APPROACH SECTION

Scale: 3/8" = 1'-0"

HMA NOTE

Hot Mix Asphalt - Approaches
Surface: 1 1/2" HMA (9.5 mm)
Base: 2 1/2" HMA (12.5 mm)

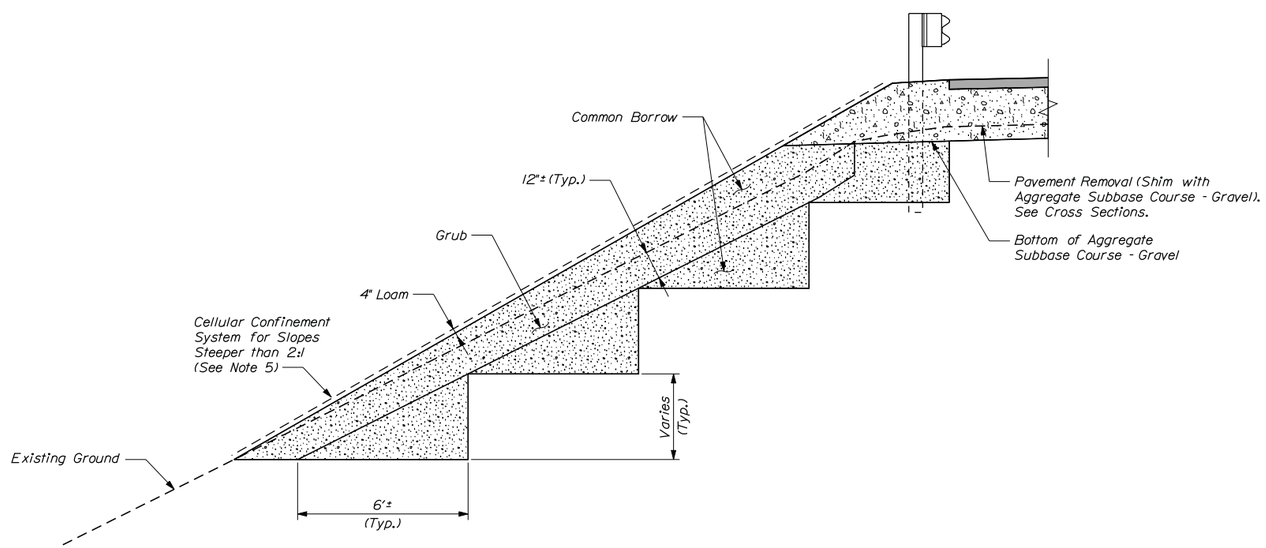

EMBANKMENT AND BENCH DETAIL

Scale: 3/8" = 1'-0"

TYPICAL SECTION NOTES

1. The pavement and subbase depths as shown on the plans are nominal.
2. Crowns for all courses of subbase and pavement shall be straight.
3. All necessary pavement cutting shall be sawcut and done in such a manner as to leave a clean vertical face.
4. Bituminous tack coat is required between all lifts of pavement and on all existing paved or milled surfaces prior to placing proposed pavement or as directed by the Resident. Bituminous Tack Coat shall be applied to any existing pavement at a rate of approximately 0.025 gal/yd2, and on milled pavement approximately 0.05 gal/yd2, prior to placing a new course.
5. Cellular Confinement System shall be installed on all slopes steeper than 2:1. Slopes shall be grubbed, backfilled and compacted prior to Cellular Confinement System installation. See Special Provision Section 620 for additional information.

GRUBBING AND BENCHING NOTES

1. Grubbing will be paid for under Item 203.20, Common Excavation. See Cross Sections for approximate limits. The Resident may adjust the grubbing limits to minimize slope disturbances.
2. Excavation for benching to receive embankments is incidental to Item 203.20, Common Excavation.
3. Benching is required where fill is to be placed on existing embankments with slopes steeper than 2:1.

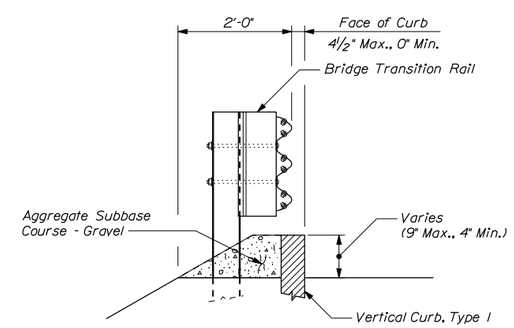

TYPICAL SECTION AT BRIDGE TRANSITION RAIL

Scale: 3/4" = 1'-0"

Date:12/12/2014

Filename: ...\cad\st\planset\004_typ.dgn

Scale:

No.	Revision	By	Date

Designed by:

VHB Vanasse Hangen Brustlin, Inc.

CONSULTANT PROJECT MANAGER: T. Bryant

	By	Date		By	Date
Designed	GME	12/14	Checked	LSC	12/14
Drawn	CMD	12/14	In Charge of	TSB	12/14

VANASSE HANGEN BRUSTLIN, INC.
500 Southborough Dr.
Suite 105B
South Portland, ME 04106
TEL (207) 889-3150
FAX (207) 253-5596

MAINE TURNPIKE

THE GOLD STAR MEMORIAL HIGHWAY

MTA PROJECT MANAGER: Ralph Norwood

SUPERSTRUCTURE REPLACEMENT
LUNT'S HILL ROAD UNDERPASS

TYPICAL SECTIONS

VHB: 55041.00 SHEET NUMBER: 4
CONTRACT: 2015.10

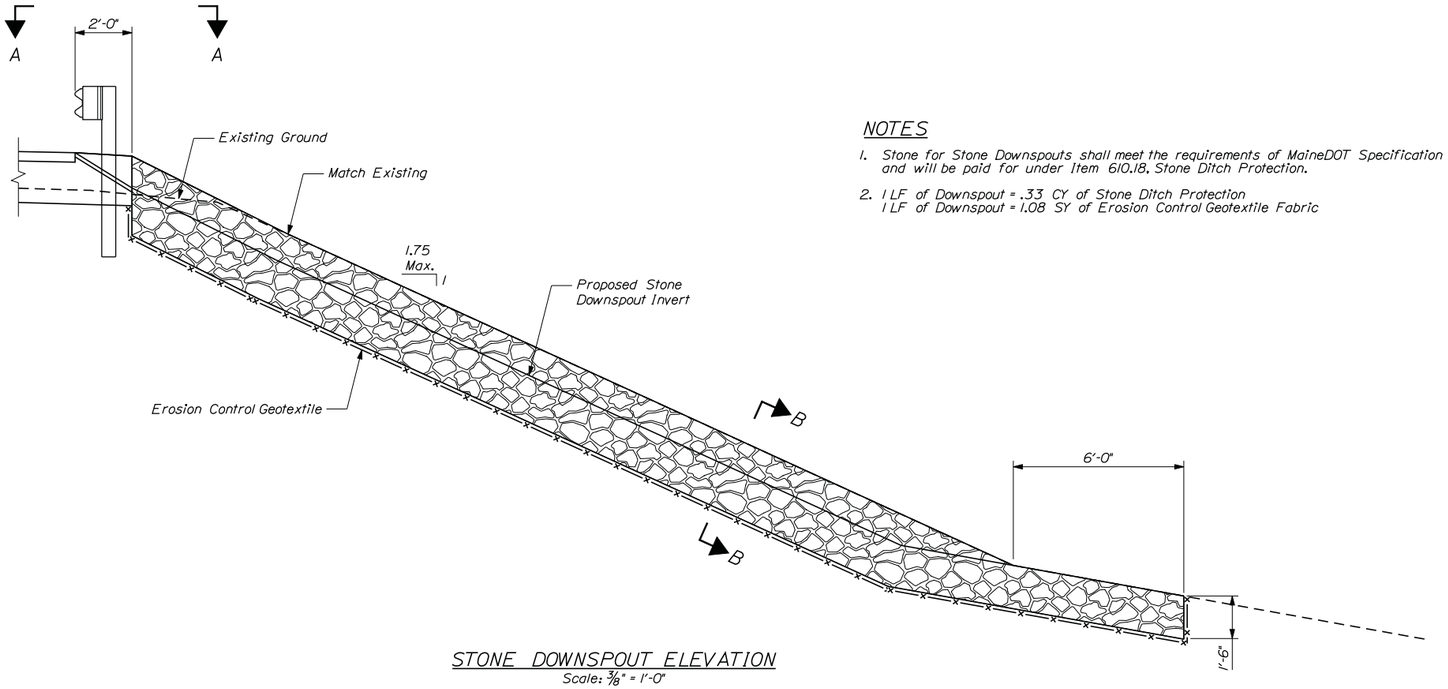

STONE DOWNSPOUT ELEVATION
Scale: 3/8" = 1'-0"

NOTES

1. Stone for Stone Downspouts shall meet the requirements of MaineDOT Specification 703.29, and will be paid for under Item 610.18, Stone Ditch Protection.
2. 1 LF of Downspout = .33 CY of Stone Ditch Protection
   1 LF of Downspout = 1.08 SY of Erosion Control Geotextile Fabric

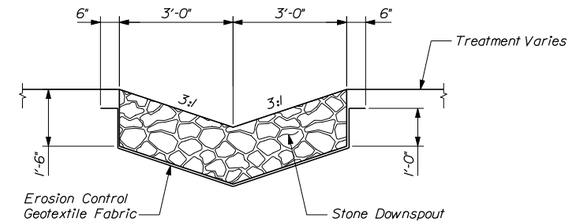

SECTION B-B
Scale: 1/2" = 1'-0"

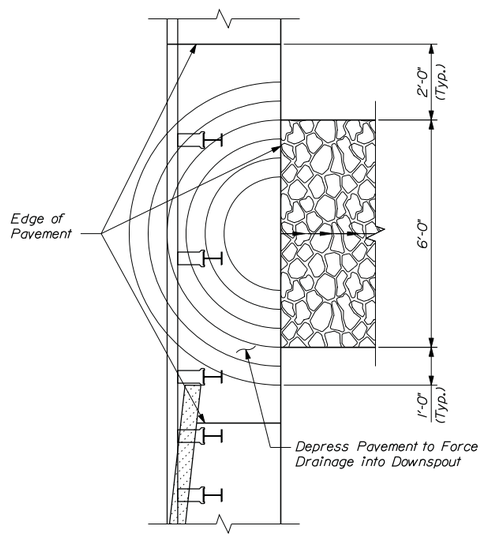

VIEW A-A
Scale: 1/2" = 1'-0"

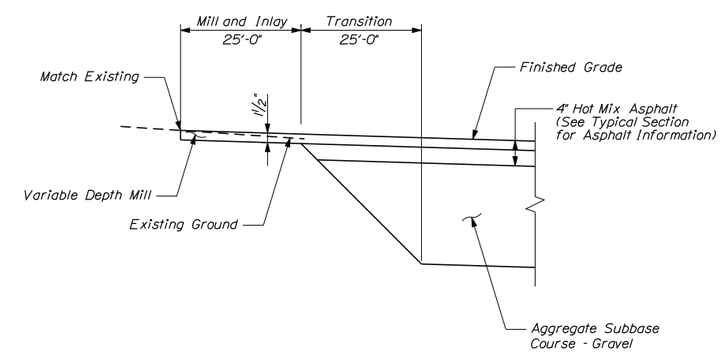

MILL AND INLAY DETAIL
Not to Scale

Date:12/12/2014

Filename: ...\cad\st\planset\005_std_01.dgn

Scale: AS NOTED

No.	Revision	By	Date

Designed by:

Vanasse Hangen Brustlin, Inc.

CONSULTANT PROJECT MANAGER: T. Bryant

	By	Date		By	Date
Designed	GME	12/14	Checked	LSC	12/14
Drawn	CMD	12/14	In Charge of	TSB	12/14

VANASSE HANGEN BRUSTLIN, INC.
500 Southborough Dr.
Suite 105B
South Portland, ME 04106
TEL (207) 889-3150
FAX (207) 253-5596

MAINE TURNPIKE

THE GOLD STAR MEMORIAL HIGHWAY

MTA PROJECT MANAGER: Ralph Norwood

SUPERSTRUCTURE REPLACEMENT
LUNT'S HILL ROAD UNDERPASS

TYPICAL DETAILS

VHB: 55041.00
CONTRACT: 2015.10

SHEET NUMBER: 5

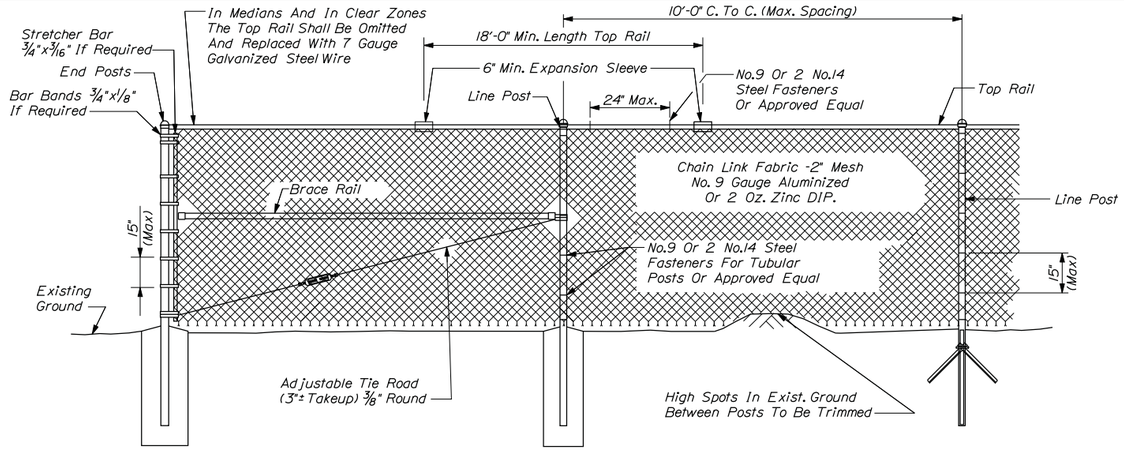

TYPICAL TYPE I END PANEL
N.T.S.

TYPICAL INTERMEDIATE PANEL
N.T.S.

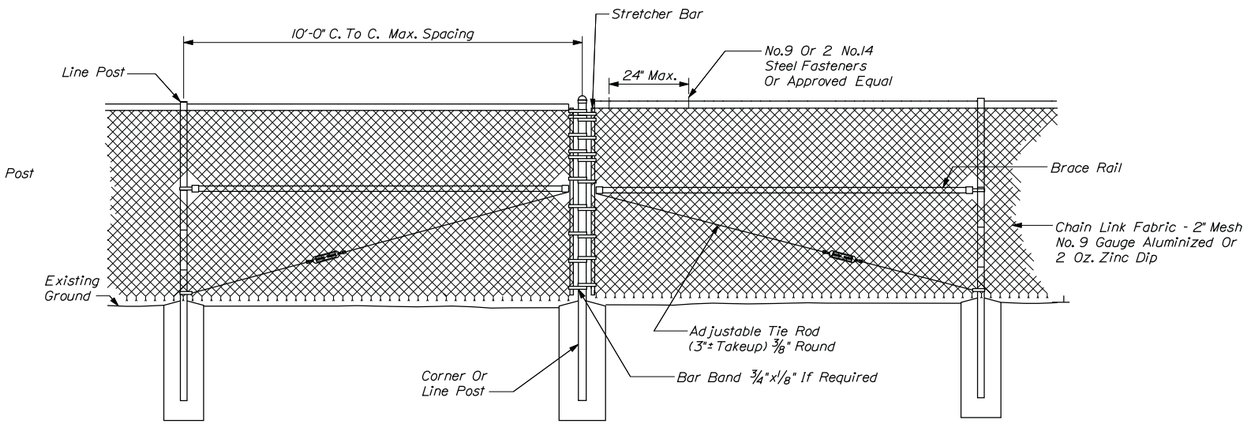

TYPICAL TYPE II BRACE PANEL
N.T.S.

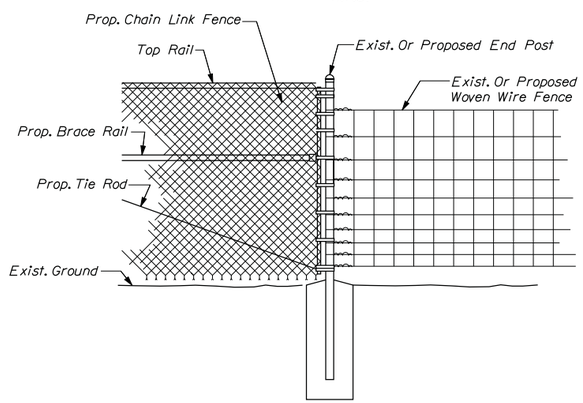

METHOD OF ATTACHING CHAIN LINK FENCE TO WOVEN WIRE FENCE
N.T.S.

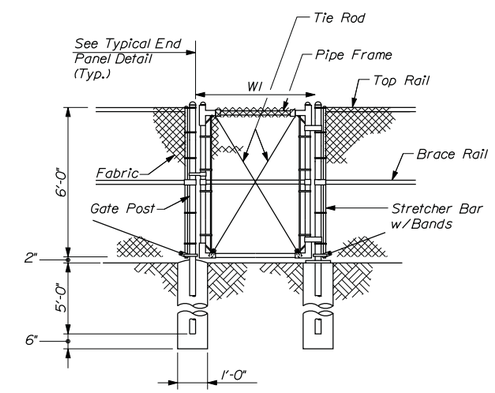

SINGLE GATE

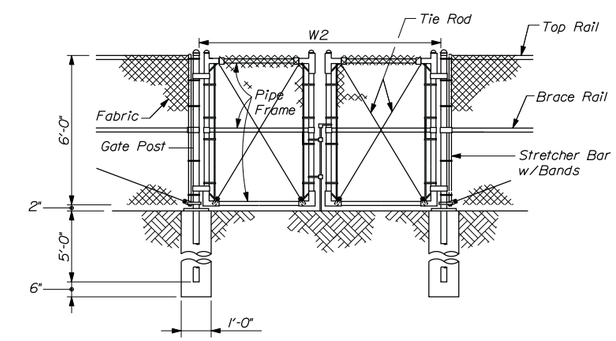

DOUBLE GATE

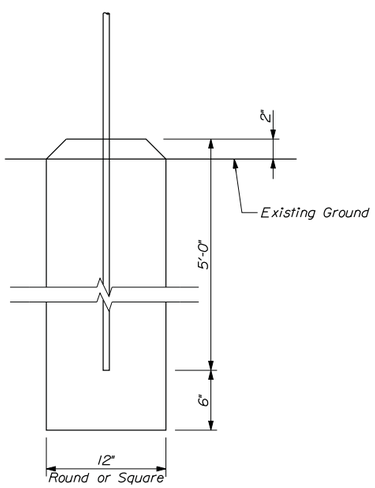

BRACE, GATE AND END POST BASE DETAIL
N.T.S.

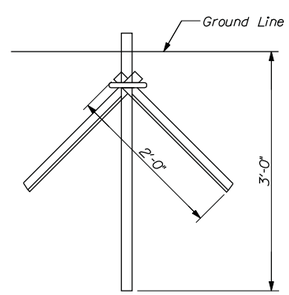

LINE POST DRIVE ANCHOR DETAIL
N.T.S.

Gate Width		Gate Post
W1	W2	O.D.
to 6'	to 12'	3"
6' to 12'	12' to 24'	4"
12' to 18'	24' to 36'	6"

Bending moments based on grade 1 (schedule 40 steel)

Chain Link Fence	Shape	Nominal Size (Inches)	Bending Moment* (lbs.-in.)
End & Corner Posts	ϕ	2 I.D.	14,025
Line Posts	ϕ	1-1/2 I.D.	8,150
Top & Brace Rails	ϕ	1-1/4 I.D.	5,875

* Material for grade 2 end, corner & line posts and top & brace rails must meet or exceed bending moments for grade 1 steel as noted above.

NOTES

1. Brace panels shall be installed where the change in grade between any three posts exceeds 15 percent.
2. No additional payment will be made for longer posts necessitated by large grade differential.
3. Type I bracing will be used at fence ends. Type II bracing will be used at corner posts.
4. When ledge is encountered, steel posts shall be set and grouted 12" deep unless the posts penetrate the ground to the depth indicated on the drawings.
5. Concrete for post foundation shall be Class B.
6. Brace, gate and end posts shall be set in concrete.
7. Chain link fence shall be installed with barbs down.
8. All components of chain link fence shall be in accordance with AASHTO M181.

Scale: AS NOTED

No.	Revision	By	Date

Designed by:

Vanasse Hangen Brustlin, Inc.

CONSULTANT PROJECT MANAGER: T. Bryant

	By	Date		By	Date
Designed	GME	12/14	Checked	LSC	12/14
Drawn	CMD	12/14	In Charge of	TSB	12/14

VANASSE HANGEN BRUSTLIN, INC.
500 Southborough Dr.
Suite 105B
South Portland, ME 04106
TEL (207) 889-3150
FAX (207) 253-5596

MAINE TURNPIKE

THE GOLD STAR MEMORIAL HIGHWAY

MTA PROJECT MANAGER: Ralph Norwood

SUPERSTRUCTURE REPLACEMENT
LUNT'S HILL ROAD UNDERPASS

FENCING DETAILS

VHB: 55041.00
CONTRACT: 2015.10

SHEET NUMBER: 6

Date: 12/12/2014
Filename: ...\cad\st\planset\006_std_02.dgn

Date:12/12/2014

Item 606.244 Guardrail Type 3d - Single Rail, 7' Posts	LF
Sta. 124+45.8, LT to Sta. 128+58.3, LT	412.5
Sta. 125+24.8, RT to Sta. 128+49.8, RT	325

Item 606.78 Low Volume Guardrail End - Type 3	EA
Sta. 124+08.3, LT to Sta. 124+45.8, LT	1
Sta. 124+87.3, RT to Sta. 125+24.8, RT	1

Item 627.712 4" White or Yellow Pavement Marking Line Type	LF
Sta. 127+00 to Sta. 132+50	DYCL 550

Limits of Milling	SY
Sta. 127+00 to Sta. 127+25	70

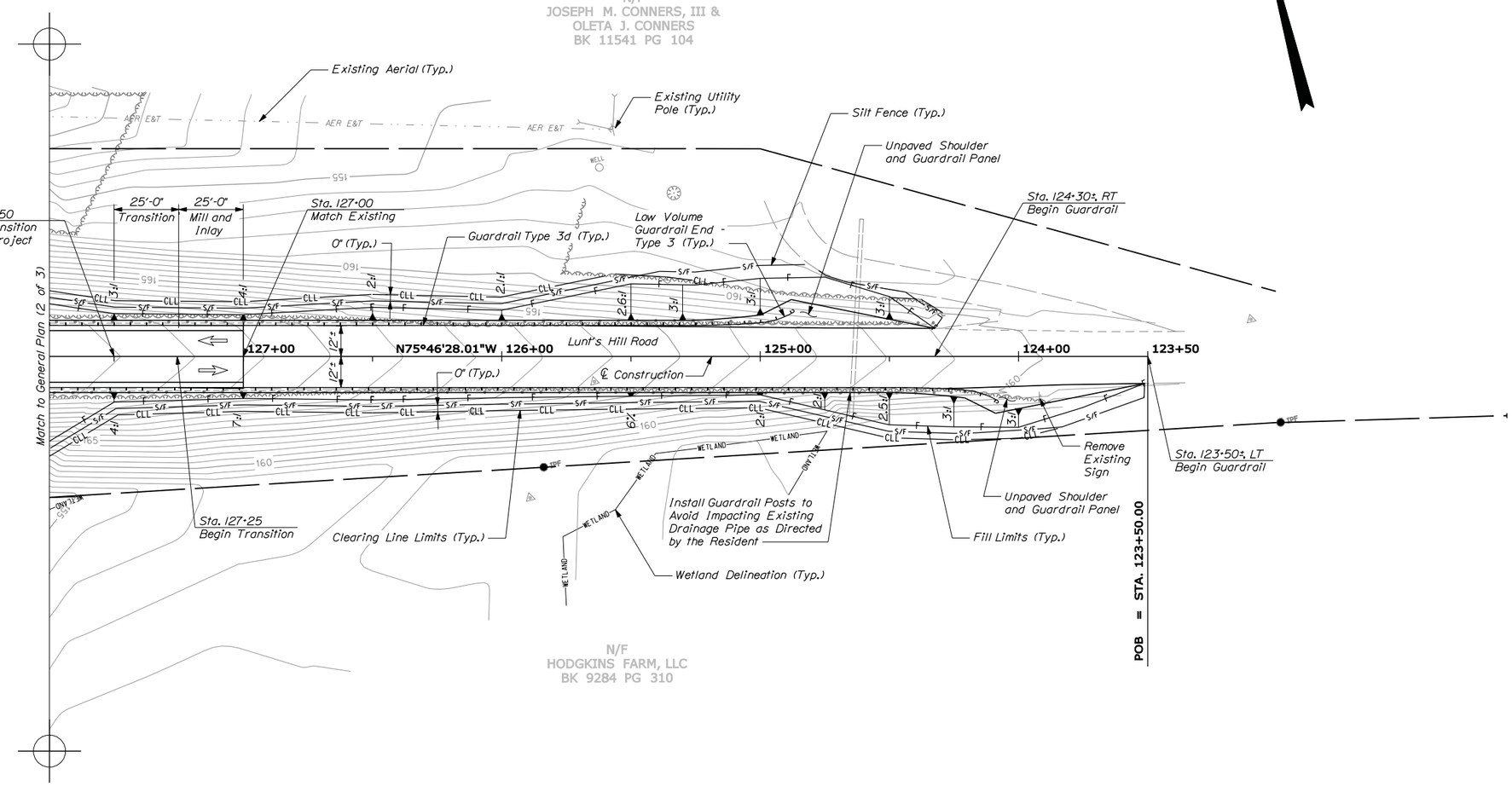

PLAN

25 0 25 50
Scale of Feet

NOTES

1. Utility relocations not anticipated. Existing utilities shown.
2. Lunt's Hill Road stationing is similar to existing record plans that run east to west.
3. Pavement markings not shown.

Filename: ...\st\planset\007_roadplan_01.dgn

Scale:

No.	Revision	By	Date

Designed by:

Vanasse Hangen Brustlin, Inc.

CONSULTANT PROJECT MANAGER: T. Bryant

	By	Date		By	Date
Designed	GME	12/14	Checked	LSC	12/14
Drawn	CMD	12/14	In Charge of	TSB	12/14

VANASSE HANGEN BRUSTLIN, INC.
500 Southborough Dr.
Suite 105B
South Portland, ME 04106
TEL (207) 889-3150
FAX (207) 253-5596

MAINE TURNPIKE

THE GOLD STAR MEMORIAL HIGHWAY

MTA PROJECT MANAGER: Ralph Norwood

SUPERSTRUCTURE REPLACEMENT
LUNT'S HILL ROAD UNDERPASS

GENERAL PLAN (1 OF 3)

VHB: 55041.00
CONTRACT: 2015.10

SHEET NUMBER: 7

Item 606.244 Guardrail Type 3d - Single Rail, 7' Posts	LF
Sta. 124+45.8, LT to Sta. 128+58.3, LT	412.5
Sta. 125+24.8, RT to Sta. 128+49.8, RT	412.5

Item 606.1728 W Beam to 3 Bar Bridge Transition	EA
Sta. 128+58.3, LT to Sta. 128+87.5, LT	1
Sta. 128+49.8, RT to Sta. 128+79.0, RT	1
Sta. 131+21.0, LT to Sta. 131+50.2, LT	1
Sta. 131+12.5, RT to Sta. 131+41.7, RT	1

Item 607.17 Chain Link Fence - 6 Foot	LF
Sta. 128+80.2, LT 110.8' to Sta. 129+26.3, LT 94.7'	48.8
Sta. 128+98.0, LT 14.5' to Sta. 129+26.3, LT 94.7'	85.0
Sta. 128+17.5, RT 66.7' to Sta. 128+71.3, RT 66.7'	53.8
Sta. 128+71.3, RT 66.7' to Sta. 128+89.8, RT 14.3'	55.5
Sta. 131+09.8, LT 14.5' to Sta. 131+18.6, LT 43.0'	29.8
Sta. 131+18.6, LT 43.0' to Sta. 131+74.5, LT 43.0'	55.9
Sta. 130+77.6, RT 81.1' to Sta. 131+01.1, RT 14.5'	70.6
Sta. 130+77.6, RT 81.1' to Sta. 131+30.2, RT 81.1'	52.6

Item 607.23 Chain Link Fence Gate	EA
East Approach	1
West Approach	1

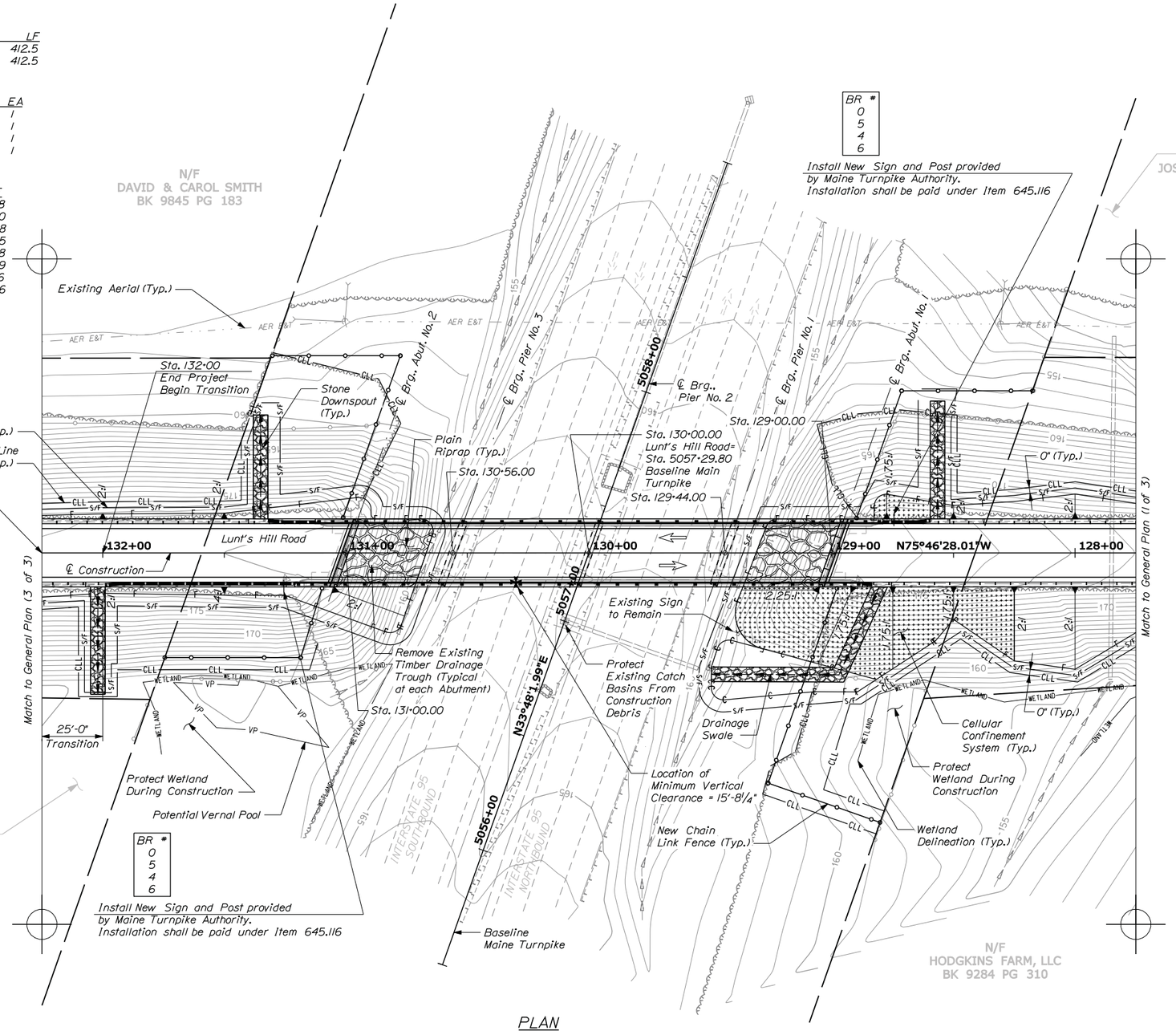

PLAN

25 0 25 50
Scale of Feet

Item 610.18 Stone Ditch Protection
Sta. 128+80.5, LT 14.0' - Sta 128+96.2, LT 48.2'
Sta. 128+56.5, RT 14.0' - RT 62.4'
Sta. 132+02.0, LT 14.0' - LT 59.6'
Sta. 131+35.0, RT 14.0' - RT 56.8'

Item 609.11 Vertical Curb, Type I	LF
Sta. 128+83.5, LT to Sta. 128+87.5, LT	4.0
Sta. 128+59.5, RT to Sta. 128+79.0, RT	19.5
Sta. 131+21.0, LT to Sta. 131+99.0, LT	78.0
Sta. 131+12.5, RT to Sta. 131+32.0, RT	19.5

Date:12/12/2014

Filename: ...\st\planset\008_roadplan_02.dgn

Scale:

No.	Revision	By	Date

Designed by:

VHB Vanasse Hangen Brustlin, Inc.

CONSULTANT PROJECT MANAGER: T. Bryant

	By	Date		By	Date
Designed	GME	12/14	Checked	LSC	12/14
Drawn	CMD	12/14	In Charge of	TSB	12/14

VANASSE HANGEN BRUSTLIN, INC.
500 Southborough Dr.
Suite 105B
South Portland, ME 04106
TEL (207) 889-3150
FAX (207) 253-5596

MAINE TURNPIKE

THE GOLD STAR MEMORIAL HIGHWAY

MTA PROJECT MANAGER: Ralph Norwood

SUPERSTRUCTURE REPLACEMENT
LUNT'S HILL ROAD UNDERPASS

GENERAL PLAN (2 OF 3)

VHB: 55041.00
CONTRACT: 2015.10

SHEET NUMBER: 8

Item 606.78 Low Volume Guardrail End - Type 3	EA
Sta. 135+62.7, LT to Sta. 136+00.2, LT	1
Sta. 135+54.2, RT to Sta. 135+91.7, RT	1

Limits of Milling	SY
Sta. 132+25 to Sta. 132+50	70

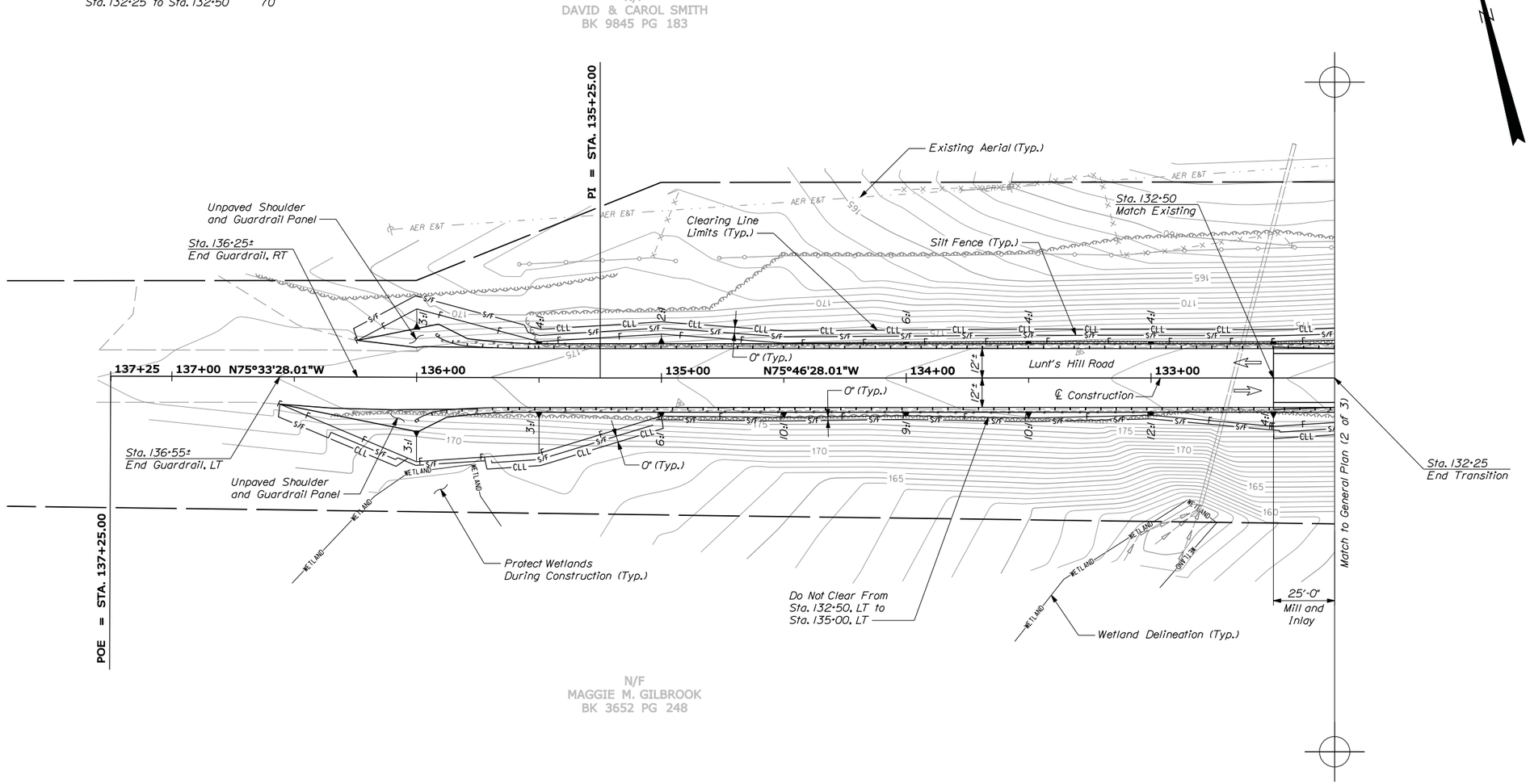

PLAN

25 0 25 50
Scale of Feet

Date:12/12/2014

Filename: ...\st\planset\009_roadplan_03.dgn

Scale:			
No.	Revision	By	Date

Designed by:

VHB Vanasse Hangen Brustlin, Inc.

CONSULTANT PROJECT MANAGER: T. Bryant

	By	Date		By	Date
Designed	GME	12/14	Checked	LSC	12/14
Drawn	CMD	12/14	In Charge of	TSB	12/14

VANASSE HANGEN BRUSTLIN, INC.
500 Southborough Dr.
Suite 105B
South Portland, ME 04106
TEL (207) 889-3150
FAX (207) 253-5596

MAINE TURNPIKE

THE GOLD STAR MEMORIAL HIGHWAY

MTA PROJECT MANAGER: Ralph Norwood

SUPERSTRUCTURE REPLACEMENT
LUNT'S HILL ROAD UNDERPASS

GENERAL PLAN (3 OF 3)

VHB: 55041.00
CONTRACT: 2015.10

SHEET NUMBER: 9

Date:12/12/2014

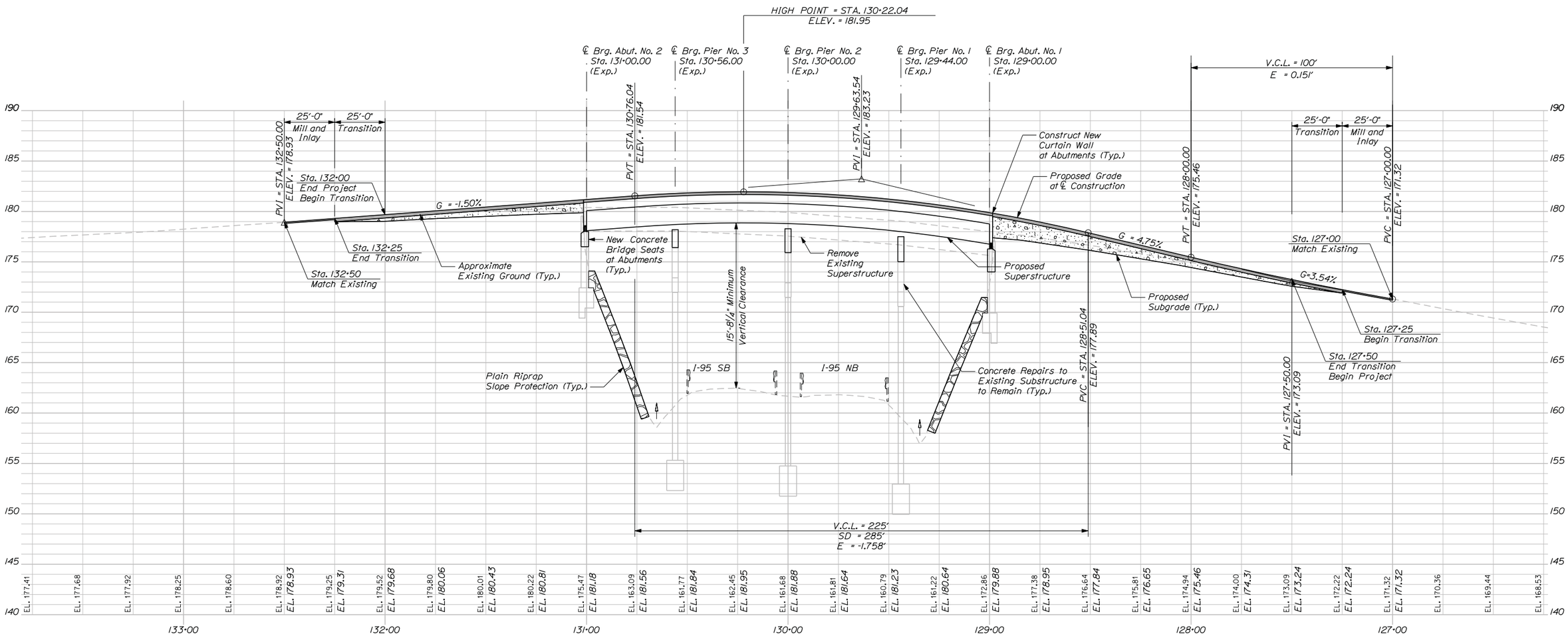

LUNT'S HILL ROAD PROFILE

Horiz. 25 0 25 50

Vert. 5 0 5 10

Scale of Feet

Scale: AS NOTED

No.	Revision	By	Date

Designed by:

VHB Vanasse Hangen Brustlin, Inc.

CONSULTANT PROJECT MANAGER: T. Bryant

	By	Date		By	Date
Designed	GME	12/14	Checked	LSC	12/14
Drawn	CMD	12/14	In Charge of	TSB	12/14

VANASSE HANGEN BRUSTLIN, INC.
500 Southborough Dr.
Suite 105B
South Portland, ME 04106
TEL (207) 889-3150
FAX (207) 253-5596

MAINE TURNPIKE

THE GOLD STAR MEMORIAL HIGHWAY

MTA PROJECT MANAGER: Ralph Norwood

SUPERSTRUCTURE REPLACEMENT
LUNT'S HILL ROAD UNDERPASS

PROFILE

VHB: 55041.00
CONTRACT: 2015.10

SHEET NUMBER: 10

Filename: ...\st\planset\010_Profile_01.dgn

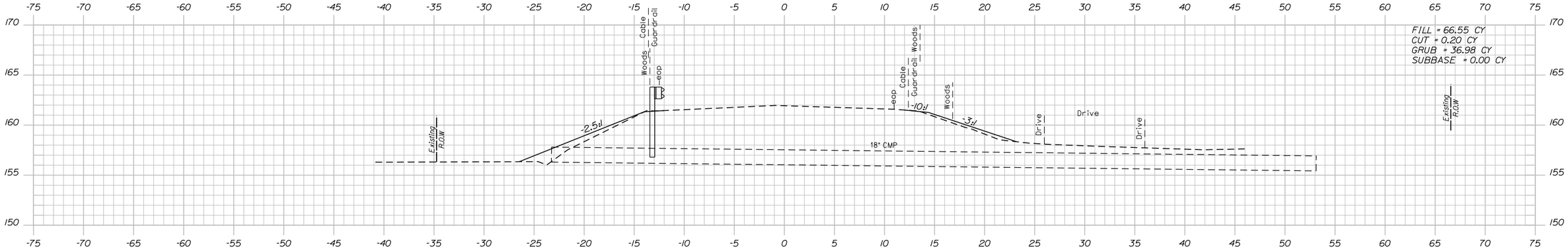

124+50.00

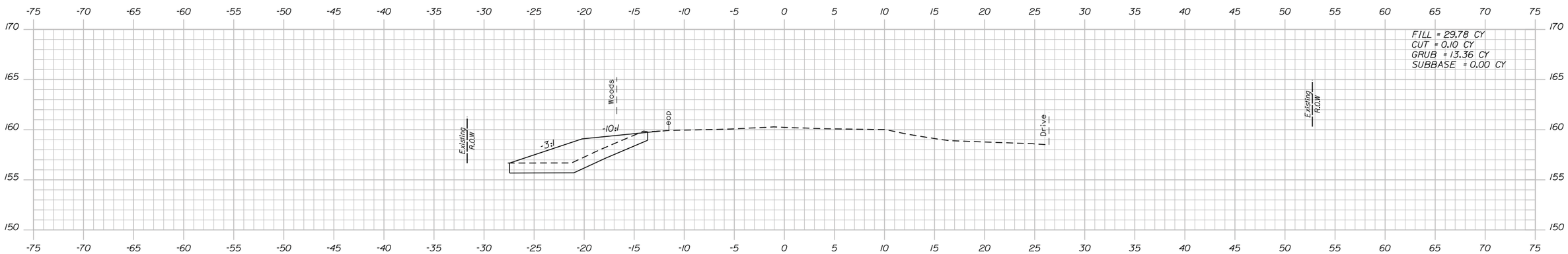

124+00.00

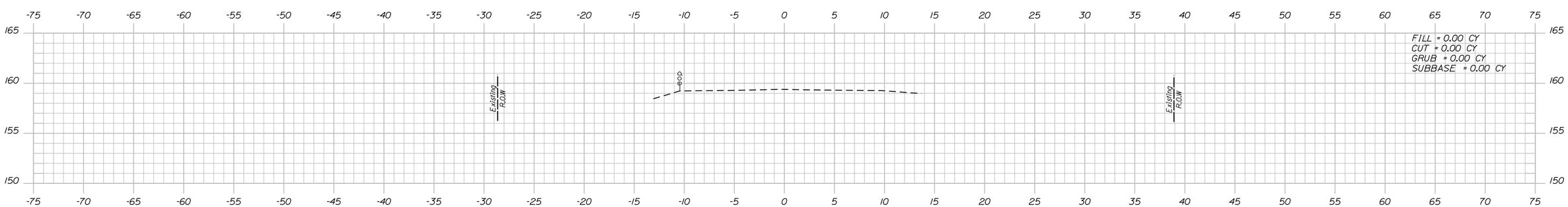

123+50.00

Date:12/12/2014

Filename: ...\cad\st\planset\011_xs_01.dgn

Scale:

No.	Revision	By	Date

Designed by:

VHB Vanasse Hangen Brustlin, Inc.

CONSULTANT PROJECT MANAGER: T. Bryant

	By	Date		By	Date
Designed	GME	12/14	Checked	LSC	12/14
Drawn	CMD	12/14	In Charge of	TSB	12/14

VANASSE HANGEN BRUSTLIN, INC.
500 Southborough Dr.
Suite 105B
South Portland, ME 04106
TEL (207) 889-3150
FAX (207) 253-5596

MAINE TURNPIKE

THE GOLD STAR MEMORIAL HIGHWAY

MTA PROJECT MANAGER: Ralph Norwood

SUPERSTRUCTURE REPLACEMENT
LUNT'S HILL ROAD UNDERPASS

CROSS SECTIONS
STA. 123+50 TO STA. 124+50

VHB: 55041.00 SHEET NUMBER: 11

CONTRACT: 2015.10

Date:12/12/2014

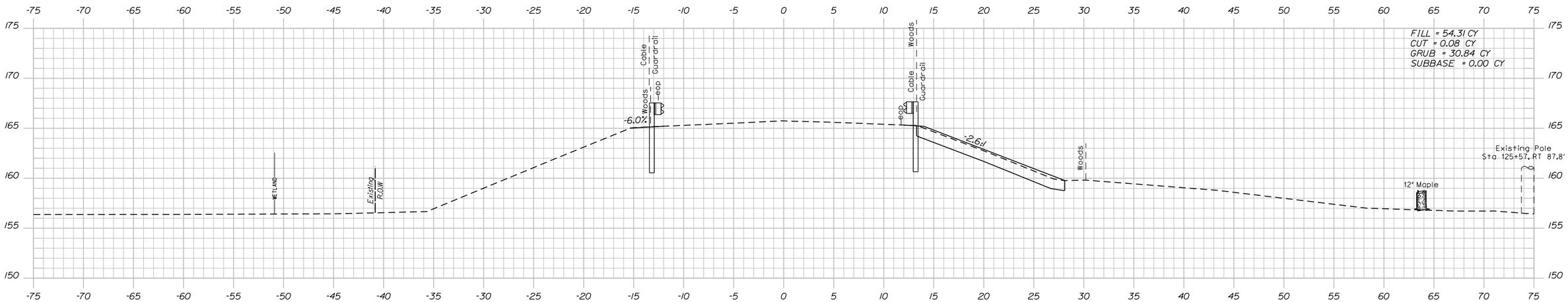

125+50.00

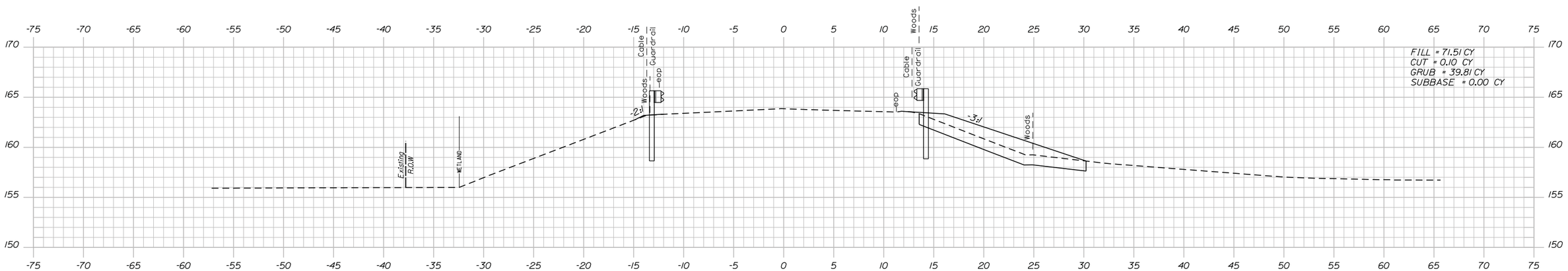

125+00.00

Filename: ...\cad\st\planset\012_xs_02.dgn

Scale:

No.	Revision	By	Date

Designed by:

VHB Vanasse Hangen Brustlin, Inc.

CONSULTANT PROJECT MANAGER: T. Bryant

	By	Date		By	Date
Designed	GME	12/14	Checked	LSC	12/14
Drawn	CMD	12/14	In Charge of	TSB	12/14

VANASSE HANGEN BRUSTLIN, INC.
500 Southborough Dr.
Suite 105B
South Portland, ME 04106
TEL (207) 889-3150
FAX (207) 253-5596

MAINE TURNPIKE

THE GOLD STAR MEMORIAL HIGHWAY

MTA PROJECT MANAGER: Ralph Norwood

SUPERSTRUCTURE REPLACEMENT
LUNT'S HILL ROAD UNDERPASS

CROSS SECTIONS
STA. 125+00 TO STA. 125+50

VHB: 55041.00
CONTRACT: 2015.10

SHEET NUMBER: 12

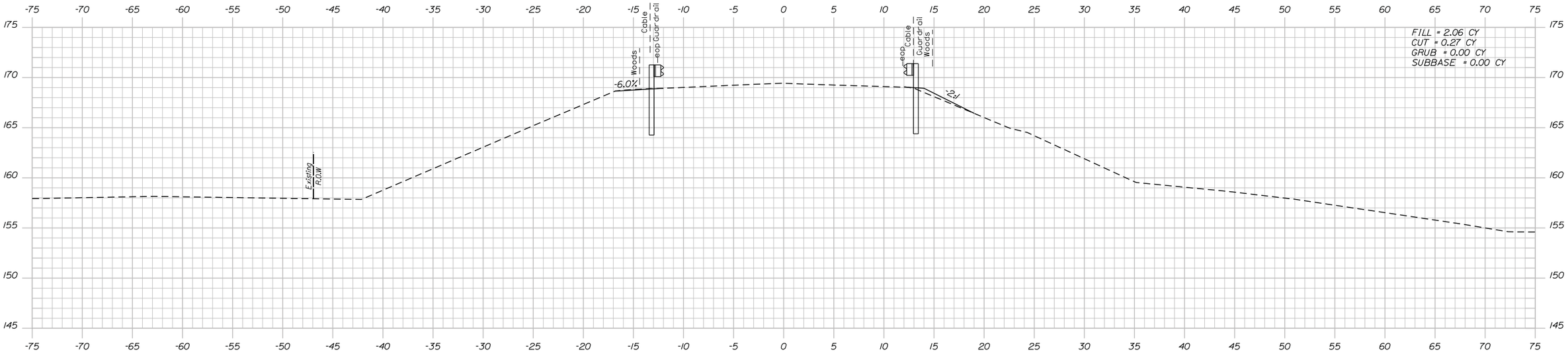

126+50.00

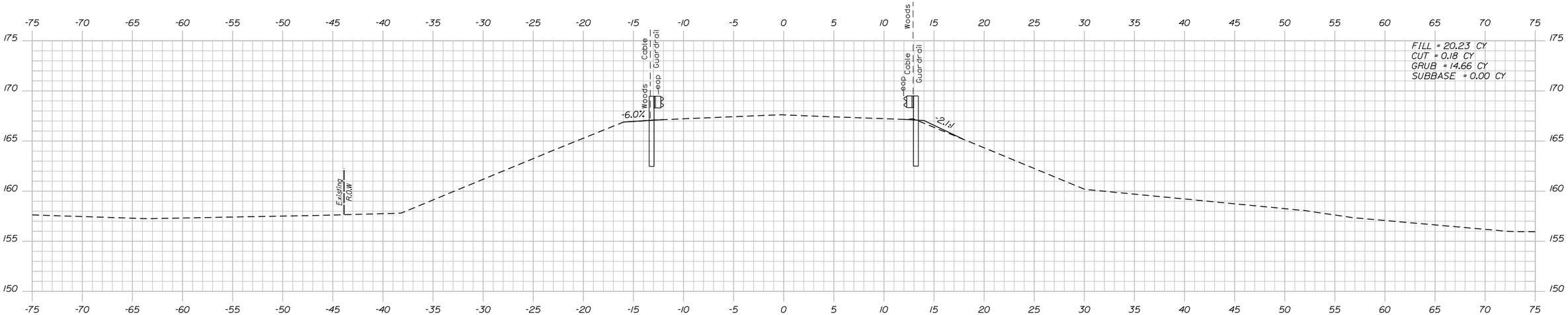

126+00.00

Date:12/12/2014

Filename: ...\cad\st\planset\013_xs_03.dgn

Scale:

No.	Revision	By	Date

Designed by:

VHB Vanasse Hangen Brustlin, Inc.

CONSULTANT PROJECT MANAGER: T. Bryant

	By	Date		By	Date
Designed	GME	12/14	Checked	LSC	12/14
Drawn	CMD	12/14	In Charge of	TSB	12/14

VANASSE HANGEN BRUSTLIN, INC.
500 Southborough Dr.
Suite 105B
South Portland, ME 04106
TEL (207) 889-3150
FAX (207) 253-5596

MAINE TURNPIKE

THE GOLD STAR MEMORIAL HIGHWAY

MTA PROJECT MANAGER: Ralph Norwood

SUPERSTRUCTURE REPLACEMENT
LUNT'S HILL ROAD UNDERPASS

CROSS SECTIONS
STA. 126+00 TO STA. 126+50

VHB: 55041.00 SHEET NUMBER: 13

CONTRACT: 2015.10

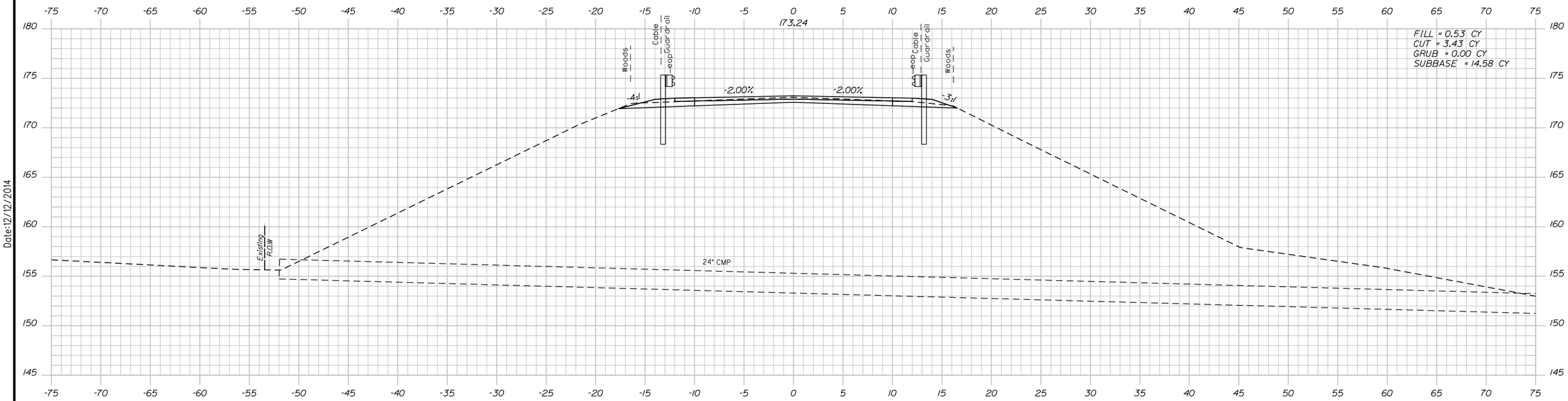

127+50.00

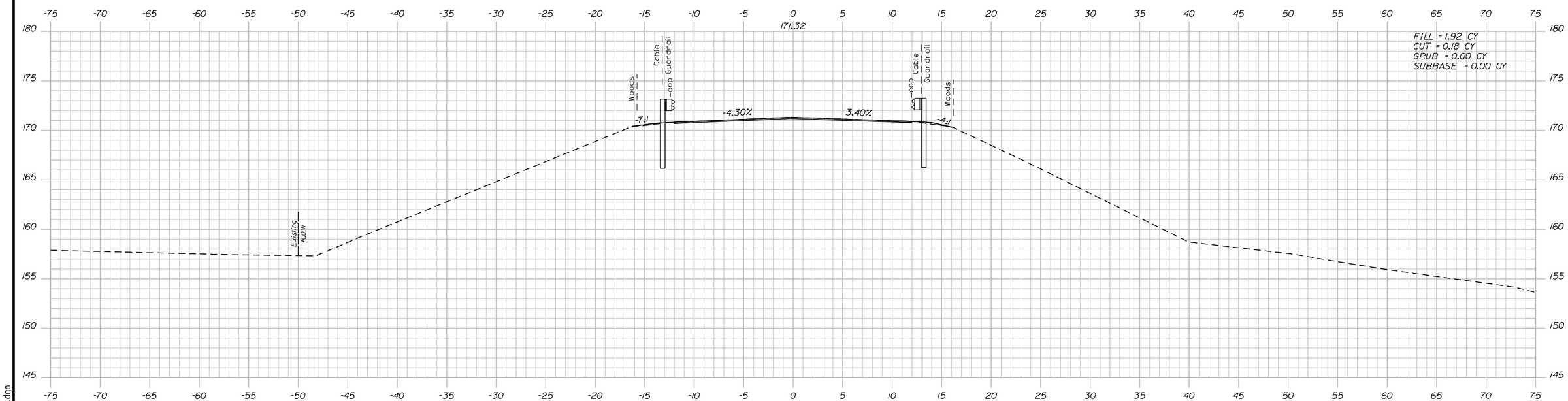

127+00.00

Date:12/12/2014

Filename: ...\cad\st\planset\014_xs_04.dgn

Scale:

No.	Revision	By	Date

Designed by:

VHB Vanasse Hangen Brustlin, Inc.

CONSULTANT PROJECT MANAGER: T. Bryant

	By	Date		By	Date
Designed	GME	12/14	Checked	LSC	12/14
Drawn	CMD	12/14	In Charge of	TSB	12/14

VANASSE HANGEN BRUSTLIN, INC.
500 Southborough Dr.
Suite 105B
South Portland, ME 04106
TEL (207) 889-3150
FAX (207) 253-5596

MAINE TURNPIKE

THE GOLD STAR MEMORIAL HIGHWAY

MTA PROJECT MANAGER: Ralph Norwood

SUPERSTRUCTURE REPLACEMENT
LUNT'S HILL ROAD UNDERPASS

CROSS SECTIONS
STA. 127+00 TO STA. 127+50

VHB: 55041.00 SHEET NUMBER: 14

CONTRACT: 2015.10

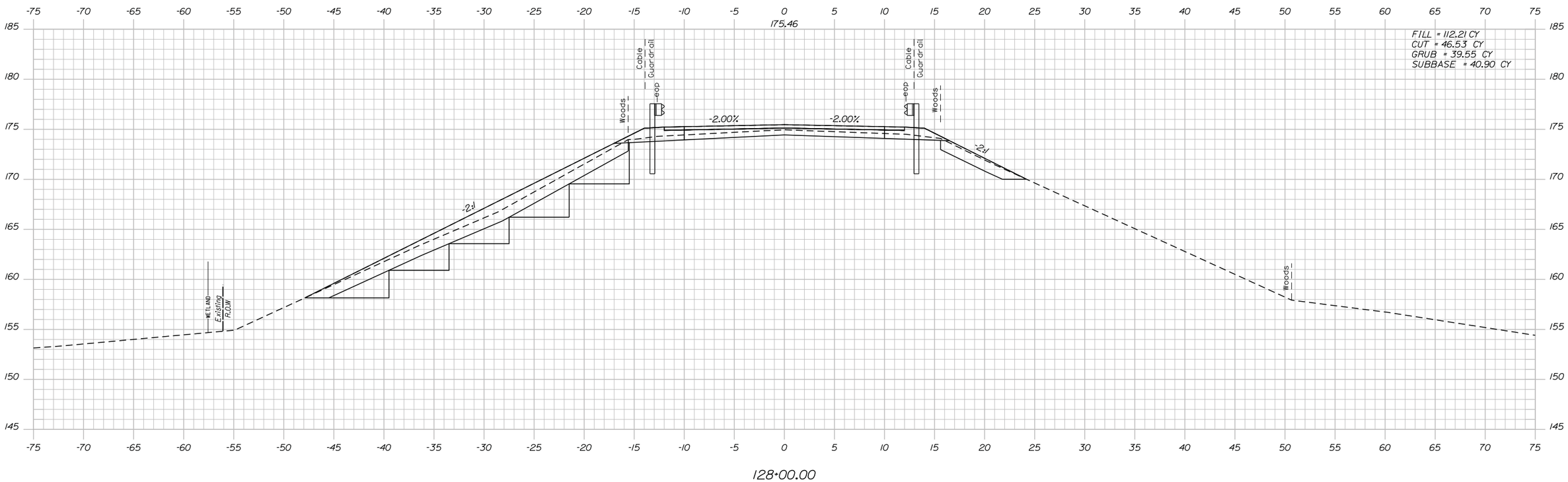

Date:12/12/2014

Filename: ...\cad\st\planset\015_xs_05.dgn

Scale:

No.	Revision	By	Date

Designed by:

VHB Vanasse Hangen Brustlin, Inc.

CONSULTANT PROJECT MANAGER: T. Bryant

	By	Date		By	Date
Designed	GME	12/14	Checked	LSC	12/14
Drawn	CMD	12/14	In Charge of	TSB	12/14

VANASSE HANGEN BRUSTLIN, INC.
500 Southborough Dr.
Suite 105B
South Portland, ME 04106
TEL (207) 889-3150
FAX (207) 253-5596

MAINE TURNPIKE

THE GOLD STAR MEMORIAL HIGHWAY

MTA PROJECT MANAGER: Ralph Norwood

SUPERSTRUCTURE REPLACEMENT
LUNT'S HILL ROAD UNDERPASS

CROSS SECTIONS
STA. 128+00

VHB: 55041.00
CONTRACT: 2015.10

SHEET NUMBER: 15

Date:12/12/2014

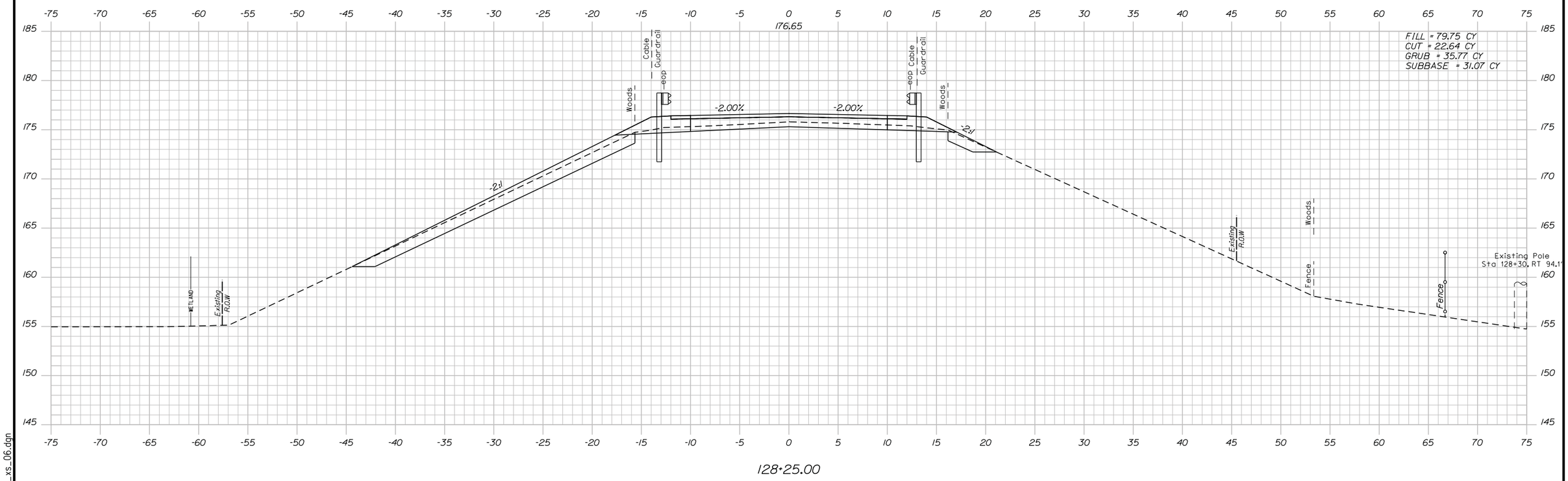

Filename: ...\cad\st\planset\016_xs_06.dgn

Scale:

No.	Revision	By	Date

Designed by:

VHB Vanasse Hangen Brustlin, Inc.

CONSULTANT PROJECT MANAGER: T. Bryant

	By	Date		By	Date
Designed	GME	12/14	Checked	LSC	12/14
Drawn	CMD	12/14	In Charge of	TSB	12/14

VANASSE HANGEN BRUSTLIN, INC.
500 Southborough Dr.
Suite 105B
South Portland, ME 04106
TEL (207) 889-3150
FAX (207) 253-5596

MAINE TURNPIKE

THE GOLD STAR MEMORIAL HIGHWAY

MTA PROJECT MANAGER: Ralph Norwood

SUPERSTRUCTURE REPLACEMENT
LUNT'S HILL ROAD UNDERPASS

CROSS SECTIONS
STA. 128+25

VHB: 55041.00
CONTRACT: 2015.10

SHEET NUMBER: 16

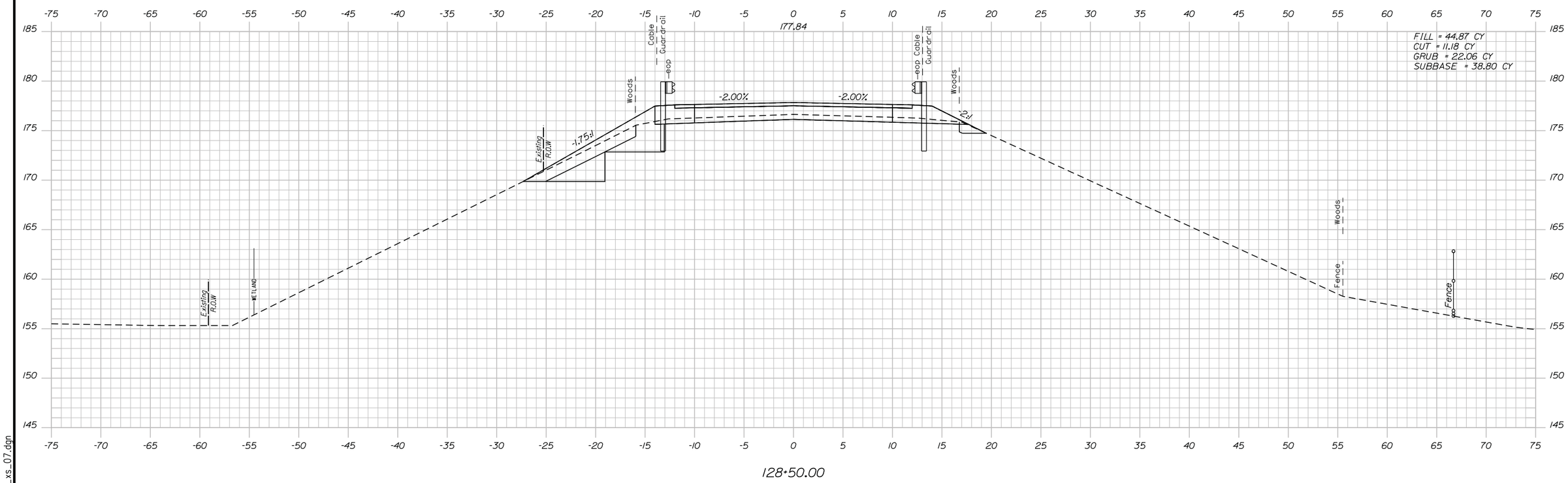

Scale:

No.	Revision	By	Date

Designed by:

VHB Vanasse Hangen Brustlin, Inc.

CONSULTANT PROJECT MANAGER: T. Bryant

	By	Date		By	Date
Designed	GME	12/14	Checked	LSC	12/14
Drawn	CMD	12/14	In Charge of	TSB	12/14

VANASSE HANGEN BRUSTLIN, INC.
500 Southborough Dr.
Suite 105B
South Portland, ME 04106
TEL (207) 889-3150
FAX (207) 253-5596

MAINE TURNPIKE

THE GOLD STAR MEMORIAL HIGHWAY

MTA PROJECT MANAGER: Ralph Norwood

SUPERSTRUCTURE REPLACEMENT
LUNT'S HILL ROAD UNDERPASS

CROSS SECTIONS
STA. 128+50

VHB: 55041.00
CONTRACT: 2015.10

SHEET NUMBER: 17

Date: 12/12/2014

Filename: ...\cad\st\planset\017_xs_07.dgn

Date:12/12/2014

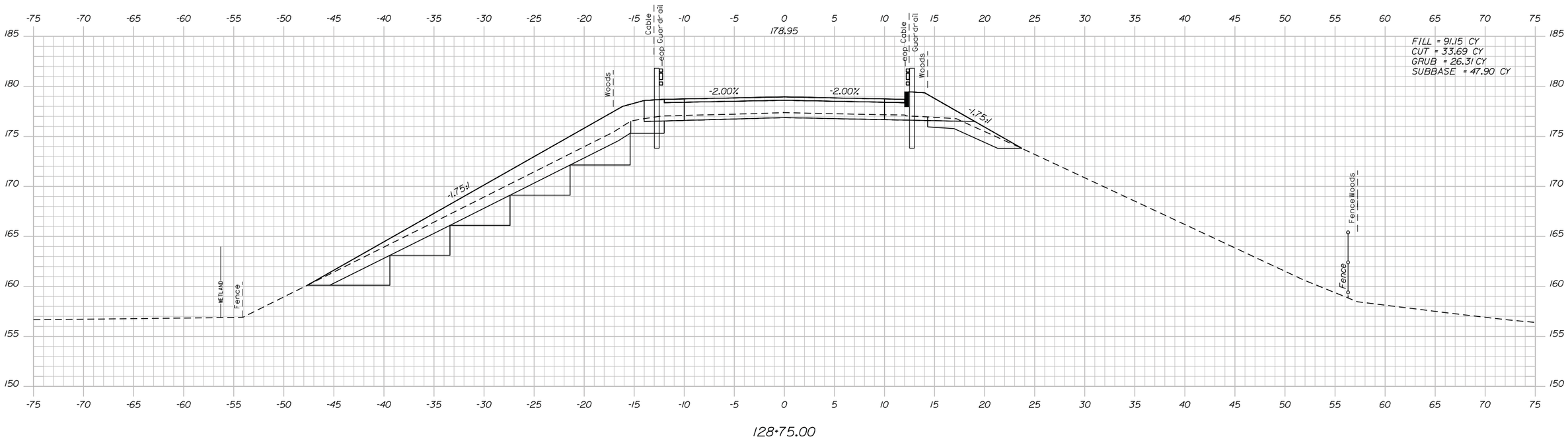

Filename: ...\cad\st\planset\018_xs_08.dgn

Scale:

No.	Revision	By	Date

Designed by:

VHB Vanasse Hangen Brustlin, Inc.

CONSULTANT PROJECT MANAGER: T. Bryant

	By	Date		By	Date
Designed	GME	12/14	Checked	LSC	12/14
Drawn	CMD	12/14	In Charge of	TSB	12/14

VANASSE HANGEN BRUSTLIN, INC.
500 Southborough Dr.
Suite 105B
South Portland, ME 04106
TEL (207) 889-3150
FAX (207) 253-5596

MAINE TURNPIKE

THE GOLD STAR MEMORIAL HIGHWAY

MTA PROJECT MANAGER: Ralph Norwood

SUPERSTRUCTURE REPLACEMENT
LUNT'S HILL ROAD UNDERPASS

CROSS SECTIONS
STA. 128+75

VHB: 55041.00
CONTRACT: 2015.10

SHEET NUMBER: 18

Date:12/12/2014

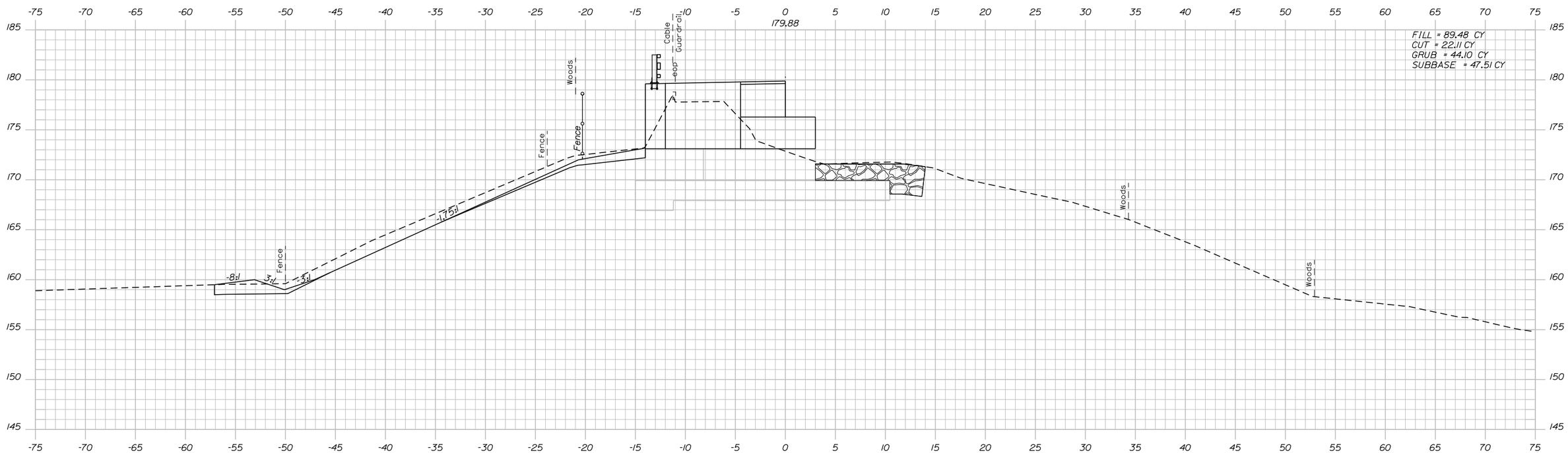

129+00.00

BRIDGE STA. 128+98.41 TO 131+01.59

Filename: ...\cad\st\planset\019_xs_09.dgn

Scale:

No.	Revision	By	Date

Designed by:

VHB Vanasse Hangen Brustlin, Inc.

CONSULTANT PROJECT MANAGER: T. Bryant

	By	Date		By	Date
Designed	GME	12/14	Checked	LSC	12/14
Drawn	CMD	12/14	In Charge of	TSB	12/14

VANASSE HANGEN BRUSTLIN, INC.
500 Southborough Dr.
Suite 105B
South Portland, ME 04106
TEL (207) 889-3150
FAX (207) 253-5596

MAINE TURNPIKE

THE GOLD STAR MEMORIAL HIGHWAY

MTA PROJECT MANAGER: Ralph Norwood

SUPERSTRUCTURE REPLACEMENT
LUNT'S HILL ROAD UNDERPASS

CROSS SECTIONS
STA. 129+00

VHB: 55041.00 SHEET NUMBER: 19

CONTRACT: 2015.10

Date:12/12/2014

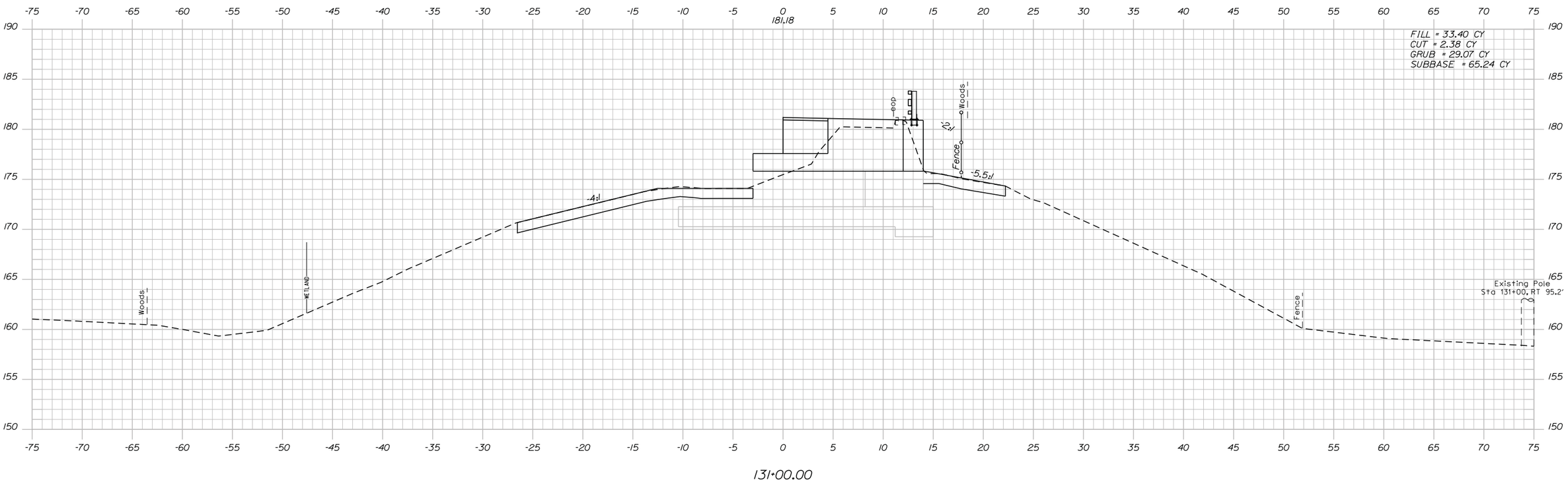

Filename: ...\cad\st\planset\020_xs_10.dgn

Scale:

No.	Revision	By	Date

Designed by:

VHB Vanasse Hangen Brustlin, Inc.

CONSULTANT PROJECT MANAGER: T. Bryant

	By	Date		By	Date
Designed	GME	12/14	Checked	LSC	12/14
Drawn	CMD	12/14	In Charge of	TSB	12/14

VANASSE HANGEN BRUSTLIN, INC.
500 Southborough Dr.
Suite 105B
South Portland, ME 04106
TEL (207) 889-3150
FAX (207) 253-5596

MAINE TURNPIKE

THE GOLD STAR MEMORIAL HIGHWAY

MTA PROJECT MANAGER: Ralph Norwood

SUPERSTRUCTURE REPLACEMENT
LUNT'S HILL ROAD UNDERPASS

CROSS SECTIONS
STA. 131+00

VHB: 55041.00
CONTRACT: 2015.10

SHEET NUMBER: 20

Date:12/12/2014

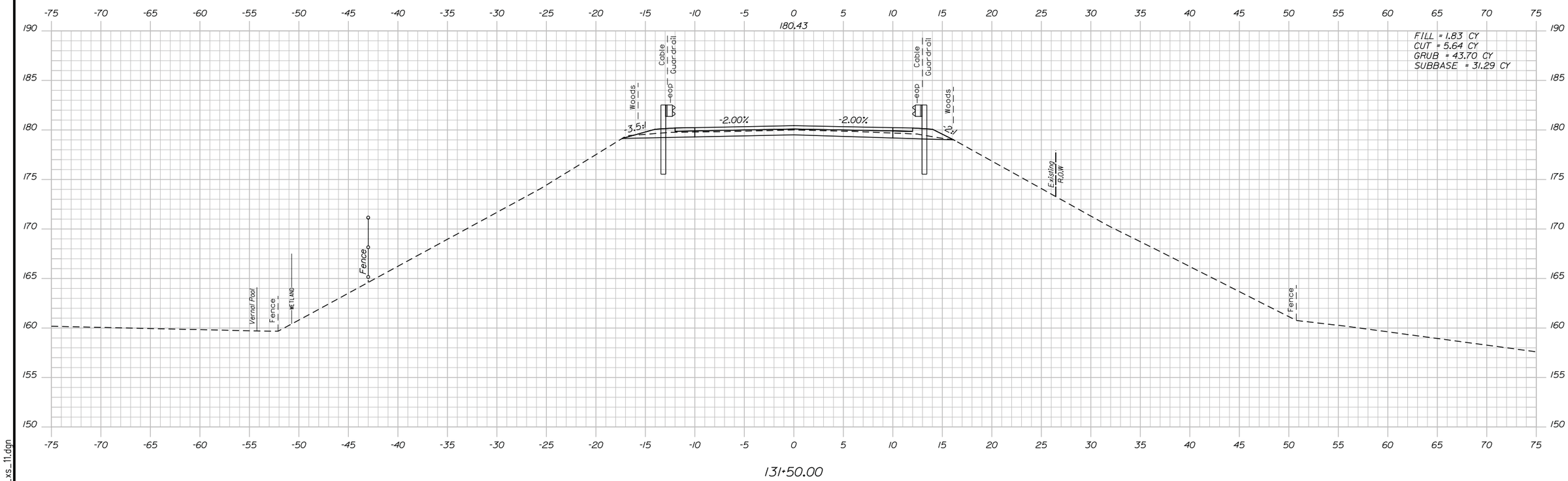

Filename: ...\cad\st\planset\021_xs_11.dgn

Scale:

No.	Revision	By	Date

Designed by:

VHB Vanasse Hangen Brustlin, Inc.

CONSULTANT PROJECT MANAGER: T. Bryant

	By	Date		By	Date
Designed	GME	12/14	Checked	LSC	12/14
Drawn	CMD	12/14	In Charge of	TSB	12/14

VANASSE HANGEN BRUSTLIN, INC.
500 Southborough Dr.
Suite 105B
South Portland, ME 04106
TEL (207) 889-3150
FAX (207) 253-5596

MAINE TURNPIKE

THE GOLD STAR MEMORIAL HIGHWAY

MTA PROJECT MANAGER: Ralph Norwood

SUPERSTRUCTURE REPLACEMENT
LUNT'S HILL ROAD UNDERPASS

CROSS SECTIONS
STA. 131+50

VHB: 55041.00
CONTRACT: 2015.10

SHEET NUMBER: 21

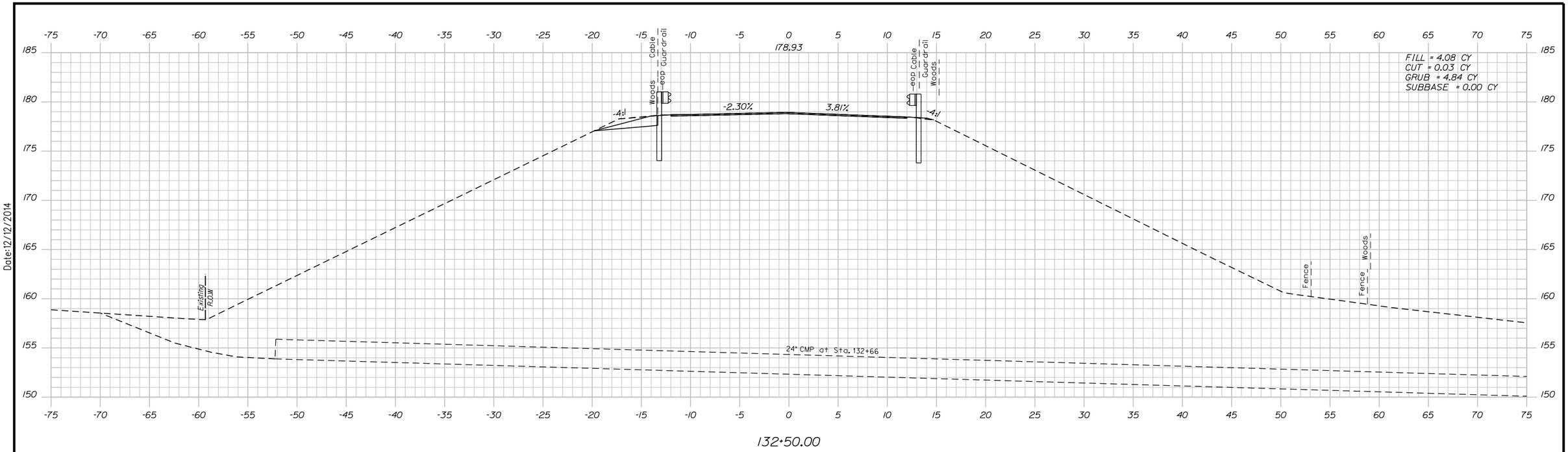

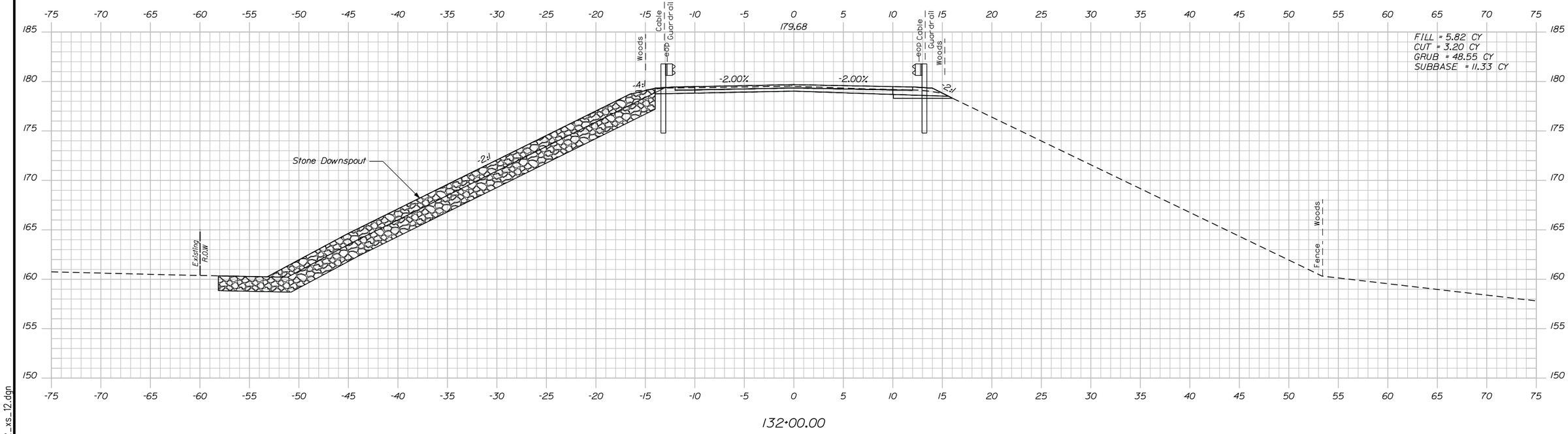

Date:12/12/2014

Filename: ...\cad\st\planset\022_xs_12.dgn

Scale:

No.	Revision	By	Date

Designed by:

VHB Vanasse Hangen Brustlin, Inc.

CONSULTANT PROJECT MANAGER: T. Bryant

	By	Date		By	Date
Designed	GME	12/14	Checked	LSC	12/14
Drawn	CMD	12/14	In Charge of	TSB	12/14

VANASSE HANGEN BRUSTLIN, INC.
500 Southborough Dr.
Suite 105B
South Portland, ME 04106
TEL (207) 889-3150
FAX (207) 253-5596

MAINE TURNPIKE

THE GOLD STAR MEMORIAL HIGHWAY

MTA PROJECT MANAGER: Ralph Norwood

SUPERSTRUCTURE REPLACEMENT
LUNT'S HILL ROAD UNDERPASS

CROSS SECTIONS
STA. 132+00 TO STA. 132+50

VHB: 55041.00 SHEET NUMBER: 22

CONTRACT: 2015.10

Date:12/12/2014

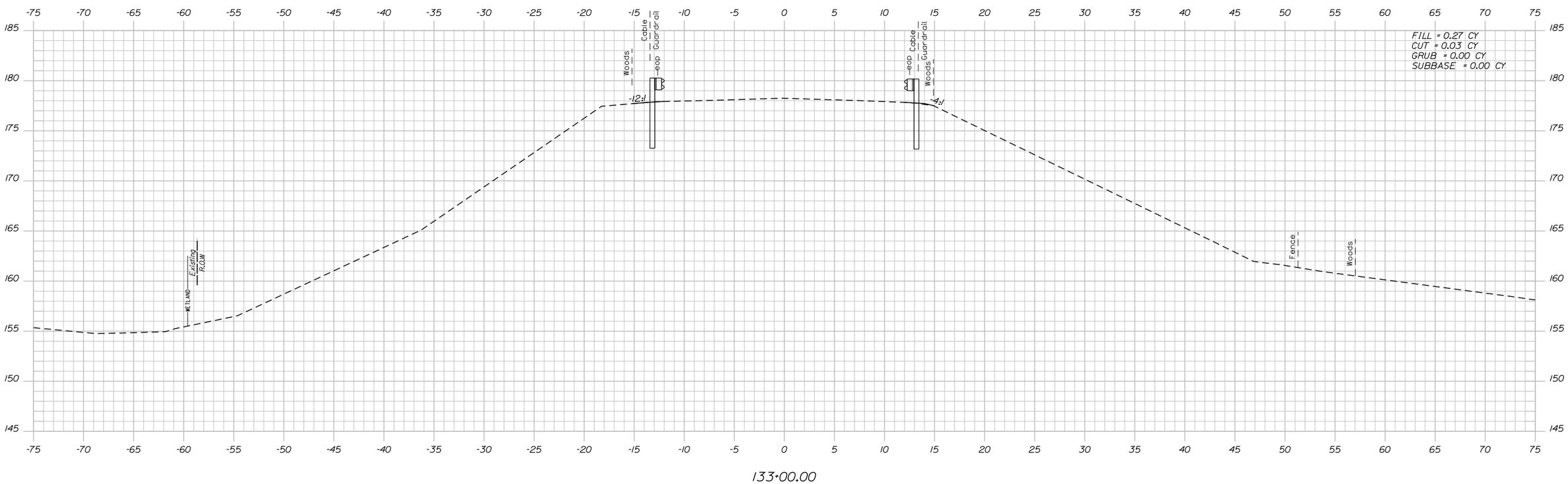

Scale:

No.	Revision	By	Date

Designed by:

VHB Vanasse Hangen Brustlin, Inc.

CONSULTANT PROJECT MANAGER: T. Bryant

	By	Date		By	Date
Designed	GME	12/14	Checked	LSC	12/14
Drawn	CMD	12/14	In Charge of	TSB	12/14

VANASSE HANGEN BRUSTLIN, INC.
500 Southborough Dr.
Suite 105B
South Portland, ME 04106
TEL (207) 889-3150
FAX (207) 253-5596

MAINE TURNPIKE

THE GOLD STAR MEMORIAL HIGHWAY

MTA PROJECT MANAGER: Ralph Norwood

SUPERSTRUCTURE REPLACEMENT
LUNT'S HILL ROAD UNDERPASS

CROSS SECTIONS
STA. 133+00

VHB: 55041.00
CONTRACT: 2015.10

SHEET NUMBER: 23

Filename: ...\cad\st\planset\023_xs_13.dgn

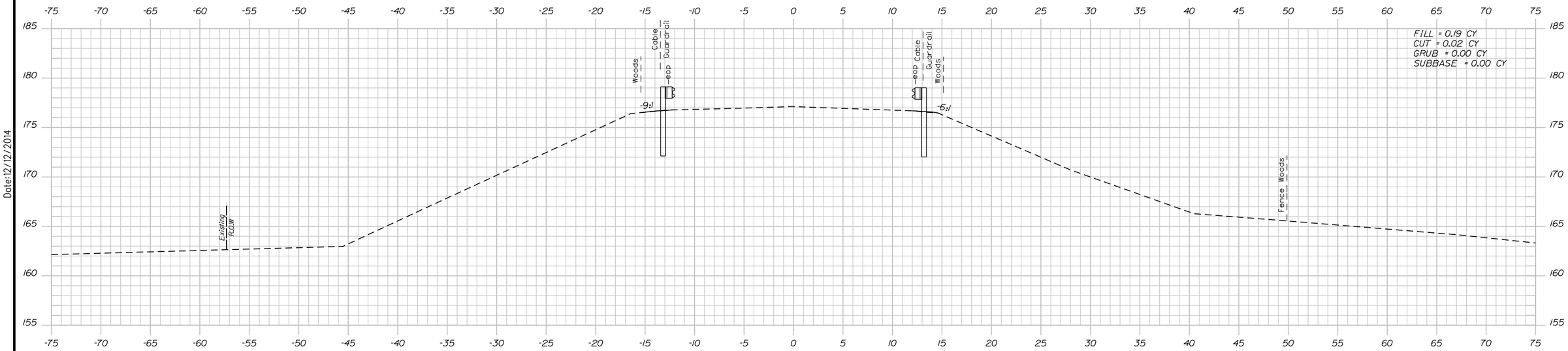

134+00.00

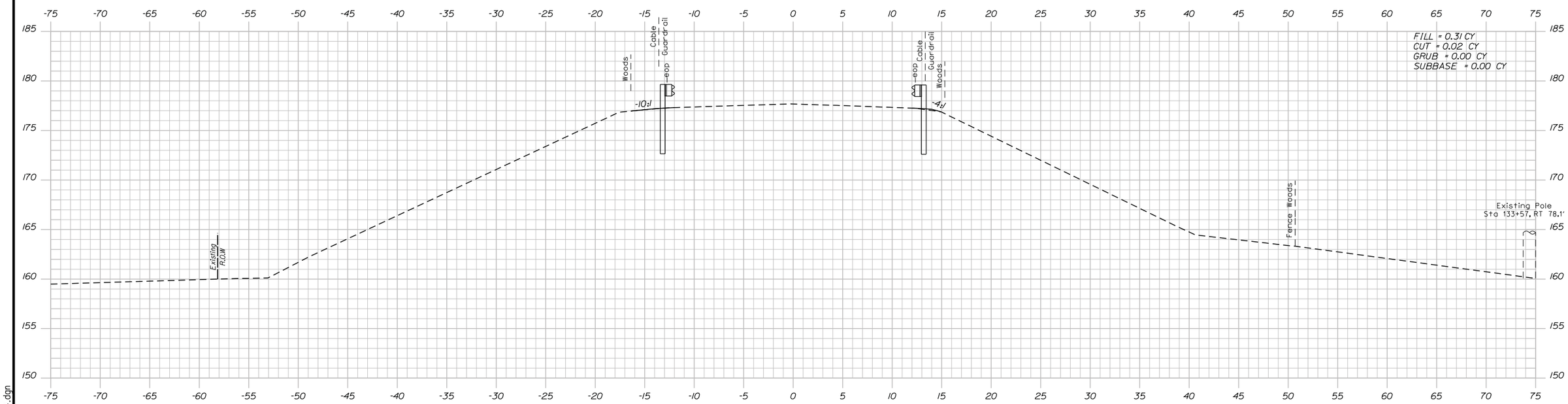

133+50.00

Date:12/12/2014

Filename: ...\cad\st\planset\024_xs_14.dgn

Scale:

No.	Revision	By	Date

Designed by:

VHB Vanasse Hangen Brustlin, Inc.

CONSULTANT PROJECT MANAGER: T. Bryant

	By	Date		By	Date
Designed	GME	12/14	Checked	LSC	12/14
Drawn	CMD	12/14	In Charge of	TSB	12/14

VANASSE HANGEN BRUSTLIN, INC.
500 Southborough Dr.
Suite 105B
South Portland, ME 04106
TEL (207) 889-3150
FAX (207) 253-5596

MAINE TURNPIKE

THE GOLD STAR MEMORIAL HIGHWAY

MTA PROJECT MANAGER: Ralph Norwood

SUPERSTRUCTURE REPLACEMENT
LUNT'S HILL ROAD UNDERPASS

CROSS SECTIONS
STA. 133+50 TO STA. 134+00

VHB: 55041.00
CONTRACT: 2015.10

SHEET NUMBER: 24

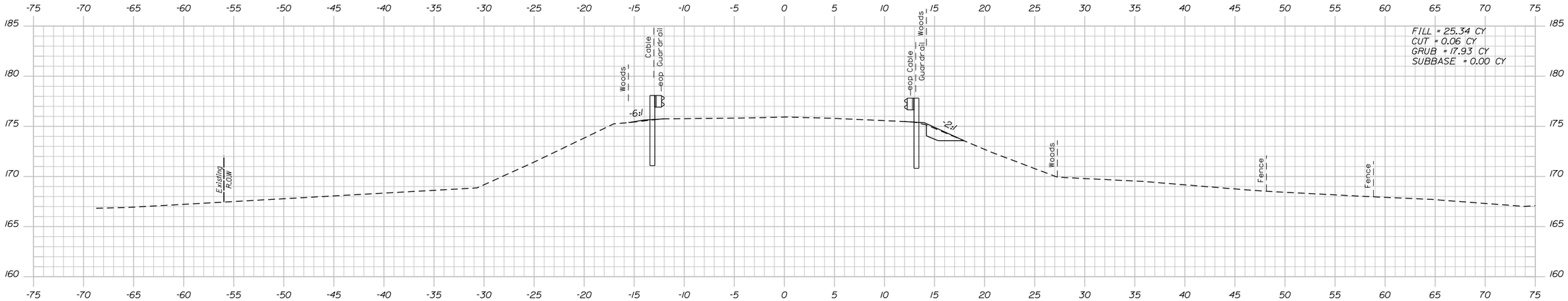

135+00.00

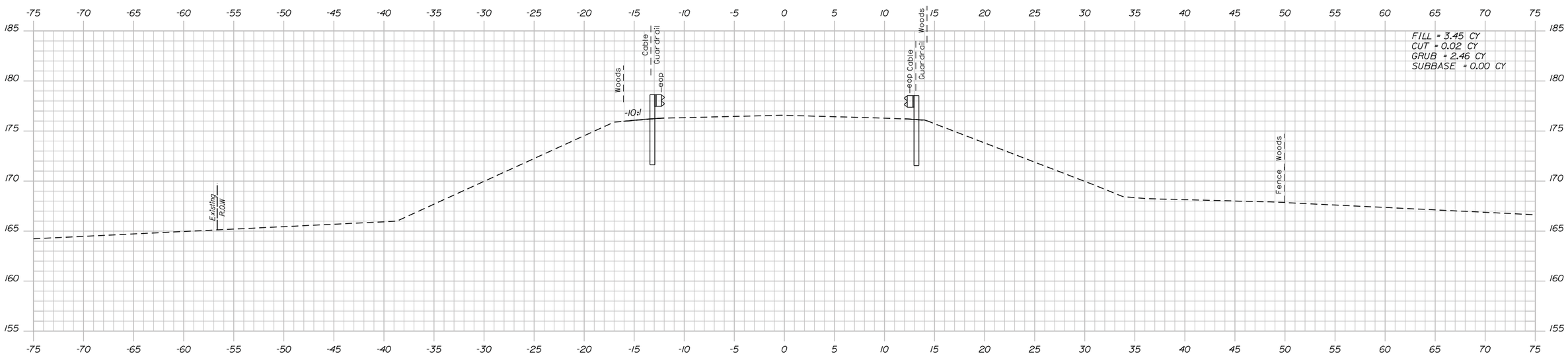

134+50.00

Date:12/12/2014

Filename: ...\cad\st\planset\025_xs_15.dgn

Scale:

No.	Revision	By	Date

Designed by:

VHB Vanasse Hangen Brustlin, Inc.

CONSULTANT PROJECT MANAGER: T. Bryant

	By	Date		By	Date
Designed	GME	12/14	Checked	LSC	12/14
Drawn	CMD	12/14	In Charge of	TSB	12/14

VANASSE HANGEN BRUSTLIN, INC.
500 Southborough Dr.
Suite 105B
South Portland, ME 04106
TEL (207) 889-3150
FAX (207) 253-5596

MAINE TURNPIKE

THE GOLD STAR MEMORIAL HIGHWAY

MTA PROJECT MANAGER: Ralph Norwood

SUPERSTRUCTURE REPLACEMENT
LUNT'S HILL ROAD UNDERPASS

CROSS SECTIONS
STA. 134+50 TO STA. 135+00

VHB: 55041.00 SHEET NUMBER: 25

CONTRACT: 2015.10 25 OF 76

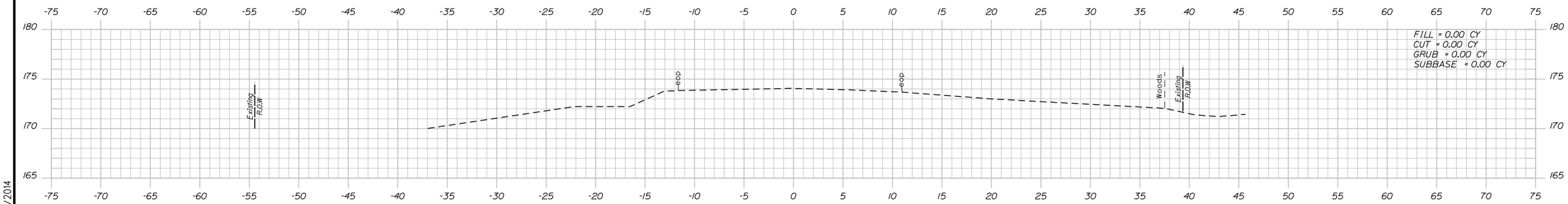

136+50.00

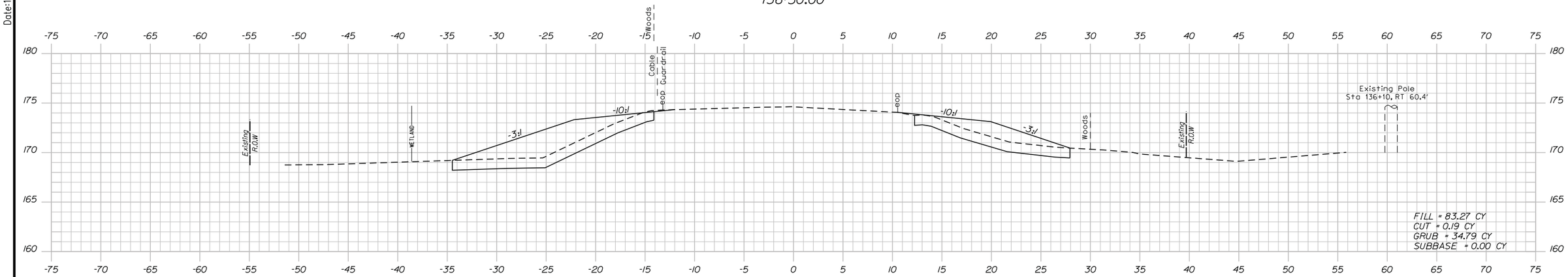

136+00.00

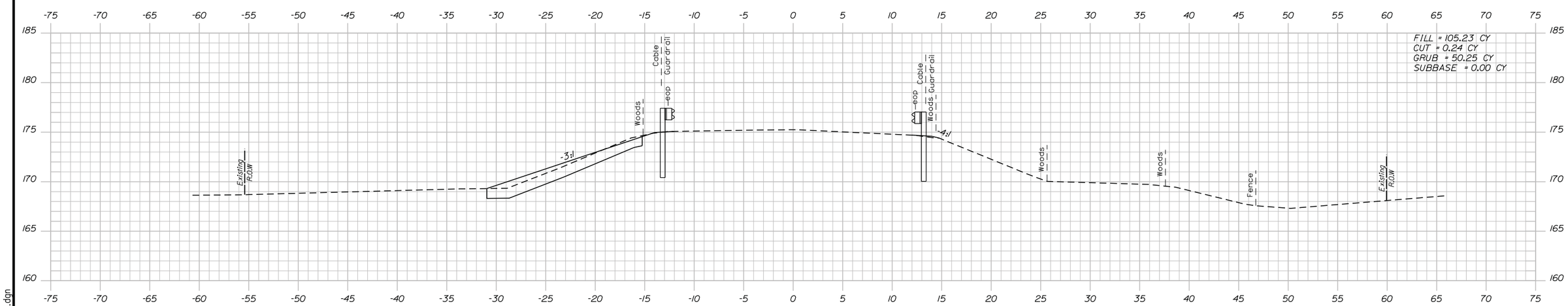

135+50.00

Date:12/12/2014

Filename: ...\cad\st\planset\026_xs_16.dgn

Scale:

No.	Revision	By	Date

Designed by:

VHB Vanasse Hangen Brustlin, Inc.

CONSULTANT PROJECT MANAGER: T. Bryant

	By	Date		By	Date
Designed	GME	12/14	Checked	LSC	12/14
Drawn	CMD	12/14	In Charge of	TSB	12/14

VANASSE HANGEN BRUSTLIN, INC.
500 Southborough Dr.
Suite 105B
South Portland, ME 04106
TEL (207) 889-3150
FAX (207) 253-5596

MAINE TURNPIKE

THE GOLD STAR MEMORIAL HIGHWAY

MTA PROJECT MANAGER: Ralph Norwood

SUPERSTRUCTURE REPLACEMENT
LUNT'S HILL ROAD UNDERPASS

CROSS SECTIONS
STA. 135+50 TO STA. 136+50

VHB: 55041.00 SHEET NUMBER: 26

CONTRACT: 2015.10

Date:12/12/2014

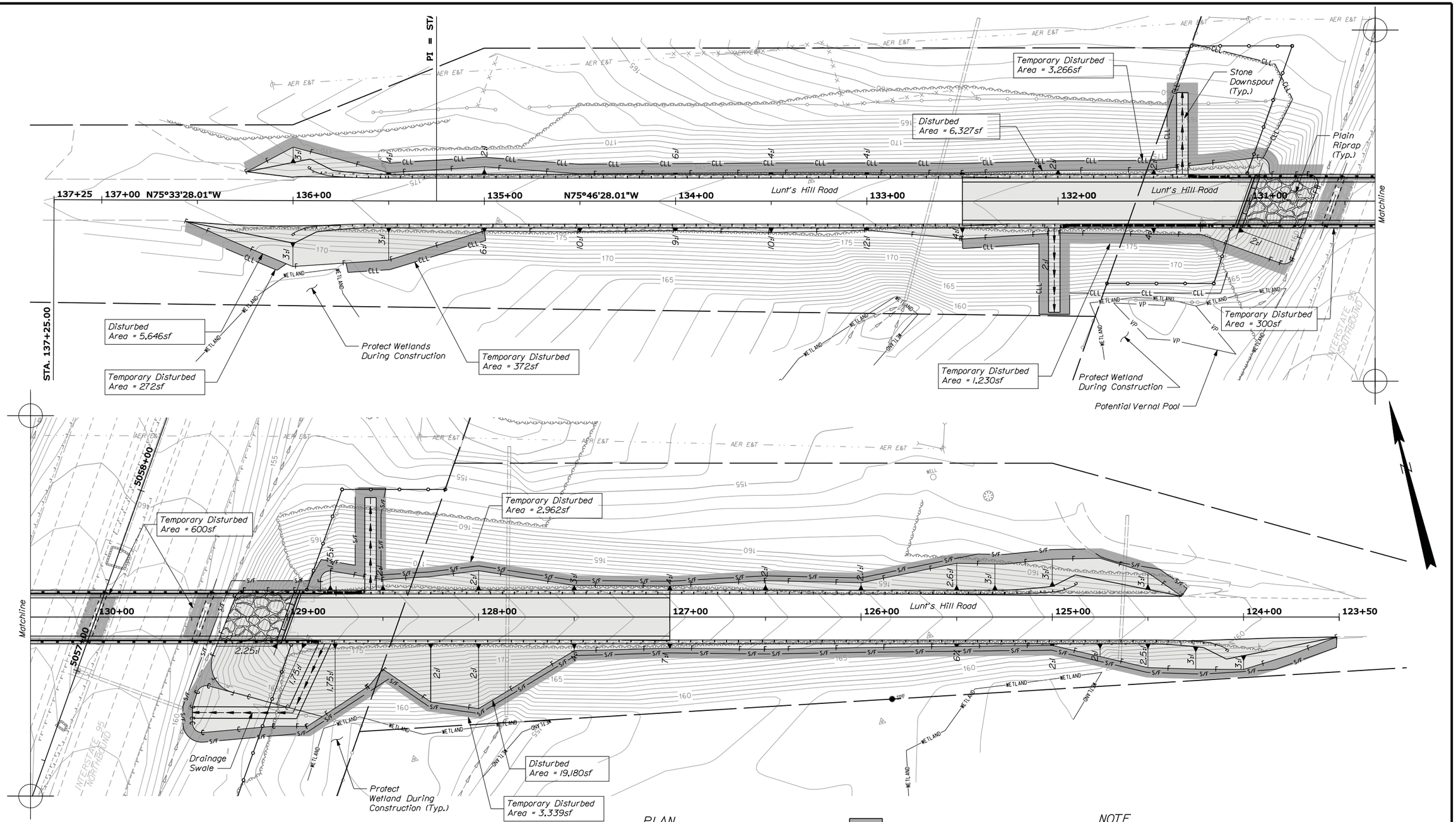

PLAN

25 0 25 50

Scale of Feet

Temporary = 0.28 acres (12,341sf)

Permanent = 0.71 acres (31,153sf)

Subtotal = 0.99 acres (43,494sf)

NOTE

1. All work must be completed without impacting wetlands. Any disturbance to existing wetlands shall be reported immediately to the Resident. Any corrective actions or delays resulting from environmental non-compliance shall be at the sole cost of the Contractor.

Filename: ...\027_disturbanceimpact.dgn

Scale:

No.	Revision	By	Date

Designed by:

Vanasse Hangen Brustlin, Inc.

CONSULTANT PROJECT MANAGER: T. Bryant

	By	Date		By	Date
Designed	GME	12/14	Checked	LSC	12/14
Drawn	CMD	12/14	In Charge of	TSB	12/14

VANASSE HANGEN BRUSTLIN, INC.
500 Southborough Dr.
Suite 105B
South Portland, ME 04106
TEL (207) 889-3150
FAX (207) 253-5596

MAINE TURNPIKE

THE GOLD STAR MEMORIAL HIGHWAY

MTA PROJECT MANAGER: Ralph Norwood

SUPERSTRUCTURE REPLACEMENT LUNT'S HILL ROAD UNDERPASS

DISTURBANCE IMPACT PLAN

VHB: 55041.00

CONTRACT: 2015.10

SHEET NUMBER: 27

DETOUR SIGN SUMMARY

Sign	Text Dimensions (Inches) Letter Height	Text Dimensions (Inches) Vertical Spacing	Size	Quantity and Color
M4-9 (MOD. L) DETOUR	SHSB		30"x24"	6 - Black on Orange
M4-9 (MOD. R) DETOUR			30"x24"	3 - Black on Orange
M4-9 (MOD. S) DETOUR	5"		30"x24"	10 - Black on Orange
M4-10L DETOUR	SHSB		48"x18"	1 - Black on Orange
M4-10R DETOUR			48"x18"	1 - Black on Orange
W20-1 (1000) ROAD CLOSED 1000 FT			36"x36"	1 - Black on Orange
W20-1 (500) ROAD CLOSED 500 FT			36"x36"	2 - Black on Orange
W20-2 DETOUR 500 FT			36"x36"	2 - Black on Orange
D3-1a # 10-365 Lunt's Hill Rd	3" 6"/4.5"	1.5" 4.5" 1.5"	42"x15"	10 - Black on Orange
D3-1b # 388-413 Lunt's Hill Rd	3" 6"/4.5"	1.5" 4.5" 1.5"	42"x15"	9 - Black on Orange
R11-2 ROAD CLOSED	SHSB		48"x30"	2 - Black on White
R11-3b (1) BRIDGE CLOSED ON LUNT'S HILL RD OVER TURNPIKE FOLLOW DETOUR	6" 5" 4"	3.38" 3.38" 3.38"	60"x42"	5 - Black on White
R11-3b (2) BRIDGE CLOSED OVER TURNPIKE LOCAL TRAFFIC ONLY	6" 5" 4"	3.38" 3.38"	60"x30"	2 - Black on White

SHSB - Text Dimensions Shall Conform to "Standard Highway Signs Book" - 2012 Edition.

LEGEND

- Detour Sign on Post Support
- Type 3 Barricade with Detour Sign
- Detour Route

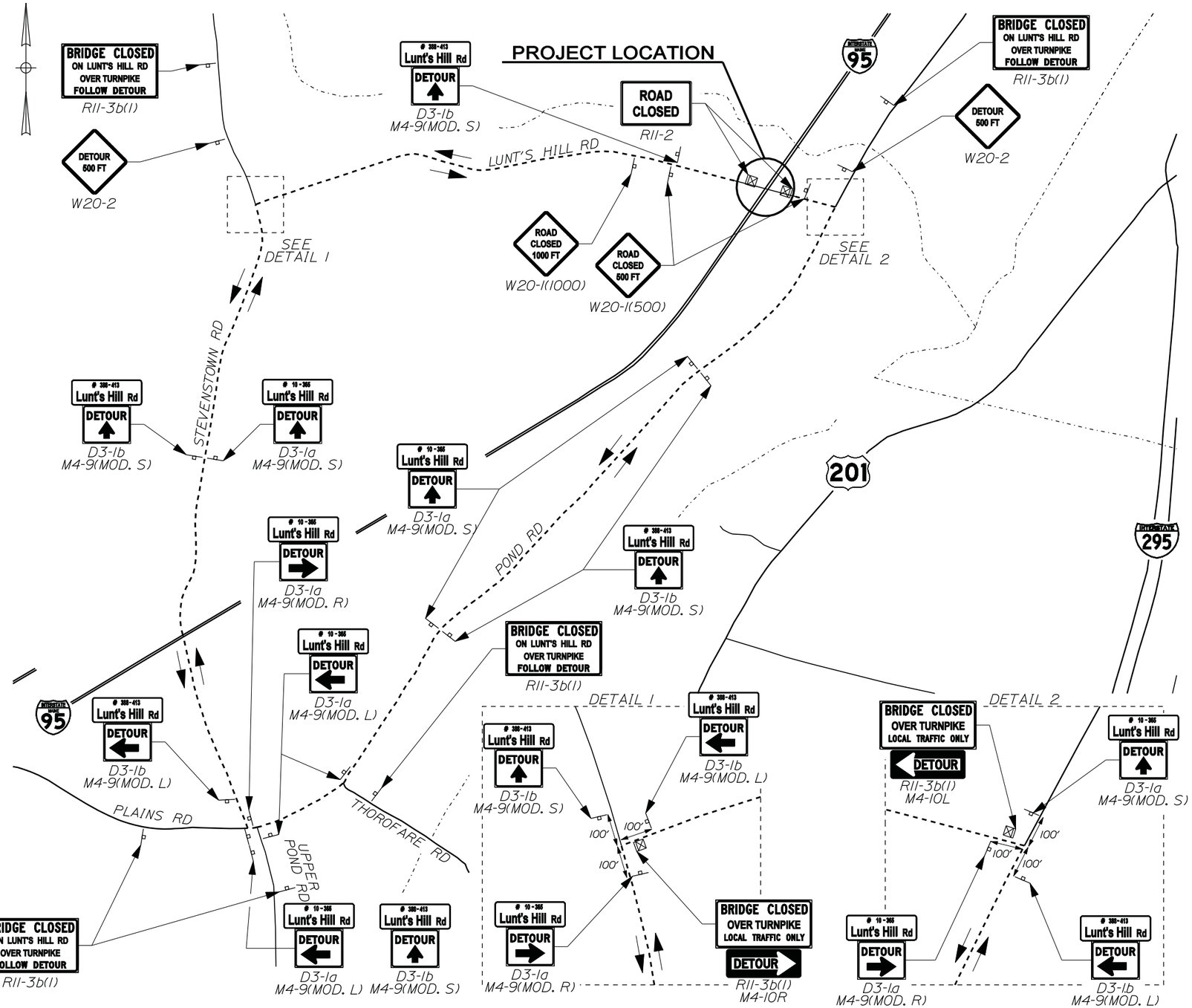

Date:12/12/2014

Filename: ...\cad\st\planset\028_detour.dgn

Scale: NOT TO SCALE

No.	Revision	By	Date

Designed by:

VHB Vanasse Hangen Brustlin, Inc.

CONSULTANT PROJECT MANAGER: T. Bryant

	By	Date		By	Date
Designed	MLG	12/14	Checked	MDS	12/14
Drawn	JAR	12/14	In Charge of	TSB	12/14

VANASSE HANGEN BRUSTLIN, INC.
500 Southborough Dr.
Suite 105B
South Portland, ME 04106
TEL (207) 889-3150
FAX (207) 253-5596

MAINE TURNPIKE

THE GOLD STAR MEMORIAL HIGHWAY

MTA PROJECT MANAGER: Ralph Norwood

SUPERSTRUCTURE REPLACEMENT
LUNT'S HILL ROAD UNDERPASS

DETOUR PLAN AND SIGN SUMMARY

VHB: 55041.00

CONTRACT: 2015.10

SHEET NUMBER: 28

TEMPORARY TRAFFIC CONTROL GENERAL NOTES

1. The traffic control plan for this project is to close the Lunt's Hill Road Overpass bridge to all traffic for the duration of construction. A temporary detour is proposed along Pond Road, Stevenstown Road, and Lunt's Hill Road to bypass the bridge. See Detour Plan (Sheet 22) for details.

2. All traffic control equipment and devices shall conform to the latest edition of the Maine Department of Transportation (MaineDOT) Standard Specifications and applicable traffic control standards and practices of the Maine Turnpike Authority (MTA).

3. All traffic control equipment and layouts shall conform to the 2009 edition of the Federal Highway Administration (FHWA) Manual on Uniform Traffic Control Devices (MUTCD), chapter 6. All traffic control signs, sign support structures, channelizing devices, flashing arrow panels (FAP), portable changeable message signs (PCMS), and other traffic control equipment along the roadside shall meet or exceed NCHRP 350 test level 3 (TL-3) requirements regardless of where implemented on the project.

4. All traffic control signs shall have ASTM 4956 Type IV, Type VIII or Type IX super high intensity or prismatic fluorescent retroreflective sheeting and shall be maintained in like-new condition. All orange construction signs shall be fluoresent orange with Type VIII, IX or XI sheeting. Placement of signs shall be adjusted to avoid obstructing existing signs and to ensure proper sight lines to the construction signs as determined by the Resident.

5. Any signs, equipment, or devices found to be damaged or unserviceable shall be replaced at the Contractor's expense.

6. During night operations, temporary work lighting shall be directed away from approaching lanes of traffic.

7. Temporary lane closures will be required, with advanced approval, whenever work will occur within four feet of the I-95 traveled way. Temporary lane closures shall be removed if no work is occurring. See Special Provision 652 for more information.

8. All lane closures shall require approval of the Resident a minimum of two working days in advance of the lane closure.

9. Contractor shall provide advanced notice of all road closures with PCMS at least seven working days prior to the proposed closure. PCMS for the bridge closure shall be placed within 500 feet of the bridge along Lunt's Hill Road. PCMS for turnpike mainline road closures shall be placed at least 500 feet in advance of the Lunt's Hill Road underpass at a location approved by the Resident.

10. For all full roadway closures or in the event that the lane closure(s) begin to cause back-ups in through traffic of more than five minutes, the Contractor shall deploy the additional signs as indicated in the single lane closure set-up details.

11. Approach ends of temporary concrete barrier shall be placed outside of the highway clear zone (minimum 34 feet from the traveled way along I-95) or protected by temporary impact attenuators or with guardrail overlaps as approved by the Resident.

12. At the completion of the work, the temporary detour shall be removed.

TURNPIKE SHOULDER CLOSURES

CONSTRUCTION SIGN SUMMARY

Sign		Text Dimensions (Inches) Letter Height	Text Dimensions (Inches) Vertical Spacing	Size	Quantity and Color
G20-2	END ROAD WORK	Text Dimensions Shall Conform to "Standard Highway Signs" - 2012		48"x24"	4 - Black on Orange
W20-1 (AHEAD)	ROAD WORK AHEAD			48"x48"	4 - Black on Orange
W21-5aL	LEFT SHOULDER CLOSED 1000 FT			48"x48"	4 - Black on Orange
W21-5aR	RIGHT SHOULDER CLOSED 1000 FT			48"x48"	4 - Black on Orange
W21-5bL	LEFT SHOULDER CLOSED			48"x48"	4 - Black on Orange
W21-5bR	RIGHT SHOULDER CLOSED			48"x48"	4 - Black on Orange

TEMPORARY LANE & ROADWAY CLOSURES

CONSTRUCTION SIGN SUMMARY

Sign		Text Dimensions (Inches) Letter Height	Text Dimensions (Inches) Vertical Spacing	Size	Quantity and Color
CS-3	EXPECT STOPPED TRAFFIC	7" 7" 7"	4" 4"	48"x48"	4 - Black on Orange
G20-2	END ROAD WORK	Text Dimensions Shall Conform to "Standard Highway Signs" - 2012		48"x24"	4 - Black on Orange
G20-5aP	WORK ZONE			36"x24"	4 - Black on Orange
R2-1(50)	SPEED LIMIT 50			48"x60"	4 - Black on White
R2-6aP	FINES DOUBLE			36"x24"	4 - Black on White
R2-12	END WORK ZONE SPEED LIMIT			36"x54"	4 - Black on White
W3-4	BE PREPARED TO STOP			48"x48"	4 - Black on Orange
W3-5(50)	SPEED LIMIT 50			48"x48"	4 - Black on Orange
W4-2(L)				48"x48"	4 - Black on Orange
W4-2(R)				48"x48"	4 - Black on Orange
W20-1 (1 MILE)	ROAD WORK 1 MILE			48"x48"	4 - Black on Orange
W20-5L	LEFT LANE CLOSED ½ MILE			48"x48"	4 - Black on Orange
W20-5R	RIGHT LANE CLOSED ½ MILE			48"x48"	4 - Black on Orange

ABBREVIATIONS FOR ALL WORK ZONE PLANS

BWLL = BROKEN WHITE LANE LINE
SWEL = SOLID WHITE EDGE LINE
SYEL = SOLID YELLOW EDGE LINE

Date:12/12/2014

Filename: ...\st\planset\029_workzone_01.dgn

Scale: NOT TO SCALE

No.	Revision	By	Date

Designed by:

Vanasse Hangen Brustlin, Inc.

CONSULTANT PROJECT MANAGER: T. Bryant

	By	Date		By	Date
Designed	MLG	12/14	Checked	MDS	12/14
Drawn	JAR	12/14	In Charge of	TSB	12/14

VANASSE HANGEN BRUSTLIN, INC.
500 Southborough Dr.
Suite 105B
South Portland, ME 04106
TEL (207) 889-3150
FAX (207) 253-5596

MAINE TURNPIKE

THE GOLD STAR MEMORIAL HIGHWAY

MTA PROJECT MANAGER: Ralph Norwood

SUPERSTRUCTURE REPLACEMENT
LUNT'S HILL ROAD UNDERPASS
WORK ZONE PLANS
(1 OF 2)

VHB: 55041.00
CONTRACT: 2015.10

SHEET NUMBER: 29

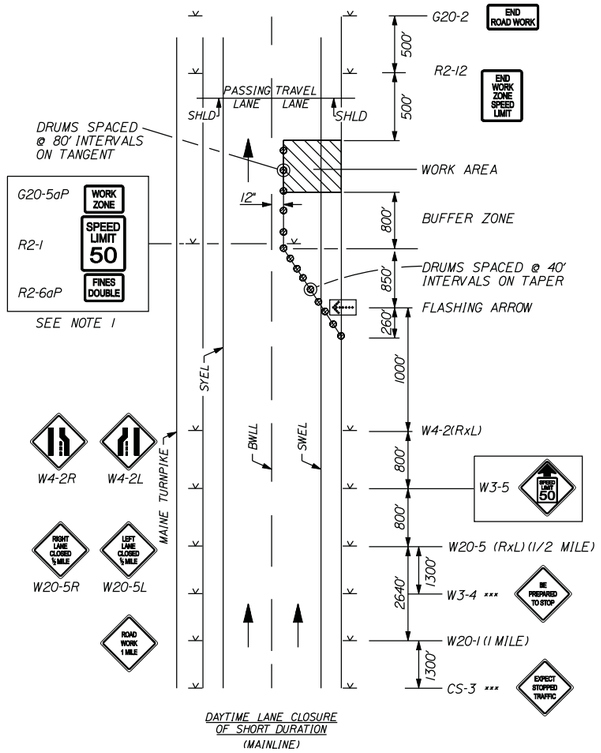

DAYTIME LANE CLOSURE OF SHORT DURATION (MAINLINE)

SINGLE LANE CLOSURE SIGNS ON EASELS

1. For easel set up only, this sign is not bracketed. One sign assembly is placed at the end of the taper. Signs may be split onto two easels.

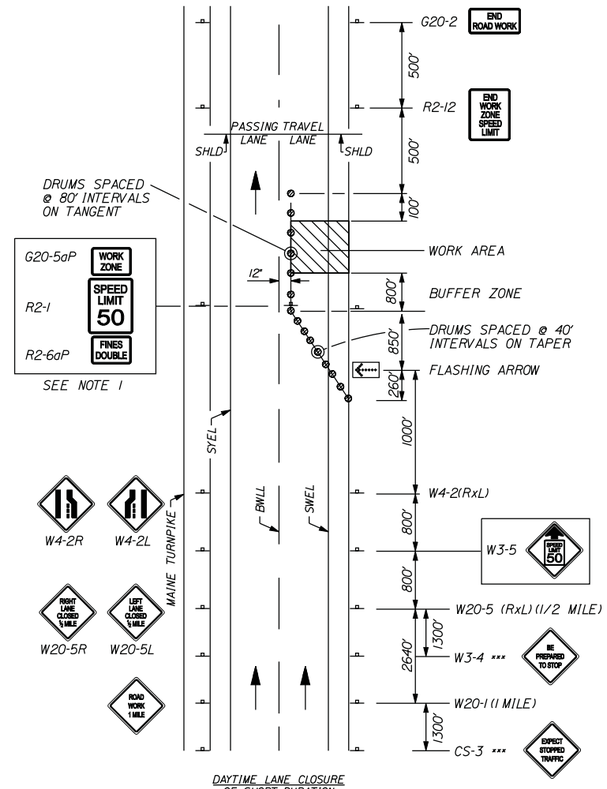

DAYTIME LANE CLOSURE OF SHORT DURATION (MAINLINE)

SINGLE LANE CLOSURE POST MOUNTED SIGN SETUP

1. Post mounted signs shall be covered when lane closure is removed.

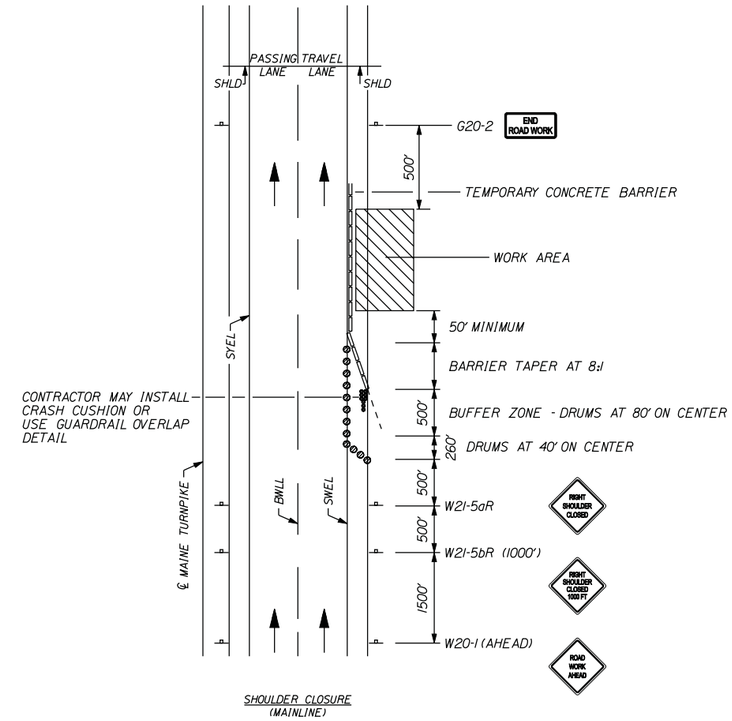

SHOULDER CLOSURE (MAINLINE)

SHOULDER CLOSURE

1. The W20-1 and G20-2 signs are not required if the shoulder closure is within a previously established work zone.

GENERAL NOTES

1. For sign details, see construction sign summary.
2. Signs designated with *** shall be used during stoppages of traffic.
3. When truck mounted attenuators are included in the contract (incidental or pay item), they shall not be located in the buffer zone.

LEGEND

- Construction Sign on Post Support
- Construction Sign on Easel
- Drums/Channelizing Devices
- Temporary Concrete Barrier, Type 1
- Temporary Impact Attenuator
- Work Area
- Type 3 Barricade with Sign
- Type 3 Barricade

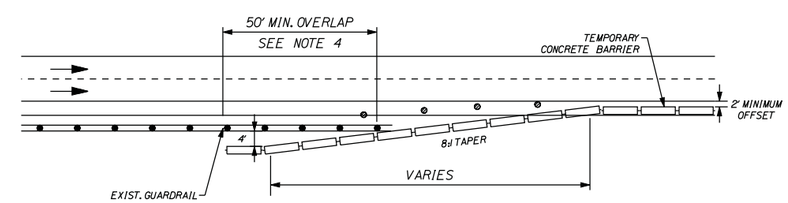

CONCRETE BARRIER / GUARDRAIL OVERLAP DETAIL

NOTES

1. Barrier ends within the highway clear zone shall be protected by a temporary impact attenuator or lapped behind guardrail.
2. If a temporary work zone crash cushion is used, the work zone crash cushion system must be founded on a level surface. Any work necessary to provide a level surface will be incidental to the work zone crash cushion item.

Date: 12/12/2014

Filename: ...\st\planset\030_workzone_02.dgn

Scale: NOT TO SCALE

No.	Revision	By	Date

Designed by:

Vanasse Hangen Brustlin, Inc.

CONSULTANT PROJECT MANAGER: T. Bryant

	By	Date		By	Date
Designed	MLG	12/14	Checked	MDS	12/14
Drawn	JAR	12/14	In Charge of	TSB	12/14

VANASSE HANGEN BRUSTLIN, INC.
500 Southborough Dr.
Suite 105B
South Portland, ME 04106
TEL (207) 889-3150
FAX (207) 253-5596

MAINE TURNPIKE

THE GOLD STAR MEMORIAL HIGHWAY

MTA PROJECT MANAGER: Ralph Norwood

SUPERSTRUCTURE REPLACEMENT
LUNT'S HILL ROAD UNDERPASS

WORK ZONE PLANS
(2 OF 2)

VHB: 55041.00
CONTRACT: 2015.10

SHEET NUMBER: 30

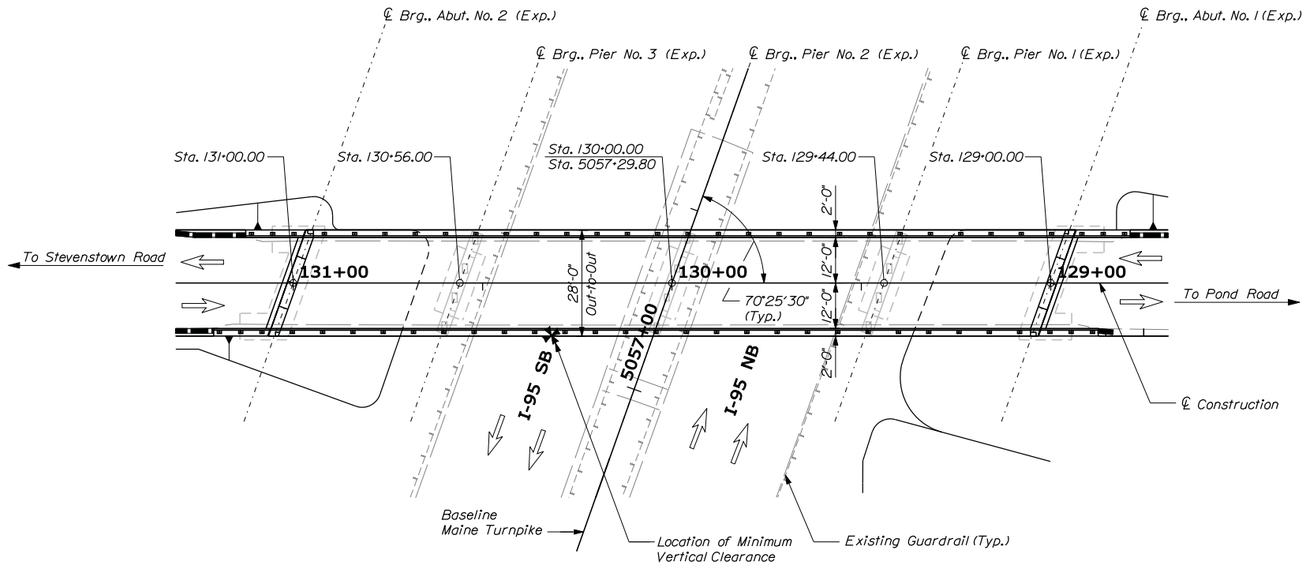

PLAN

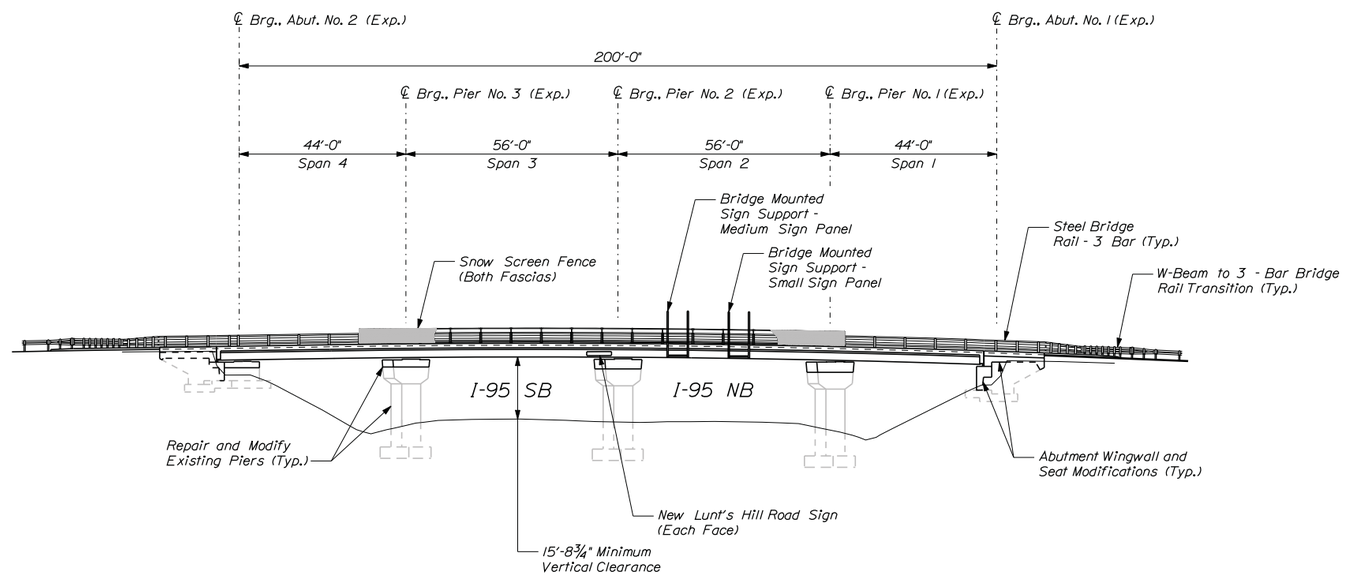

ELEVATION
(Existing Guardrail not Shown)

SPECIFICATIONS

Design: AASHTO LRFD Bridge Design Specifications, 2012 and Interims Through 2013

Construction: State of Maine Department of Transportation Standard Specifications, Revision of December 2002.

State of Maine Department of Transportation Standard Details for Highways and Bridges, Revision of December of 2002, with all revisions thereto.

AASHTO LRFD Bridge Construction Specifications, Third Edition with 2014 Interims

DESIGN LOADING

Live Load ..... HL - 93

MATERIALS

Concrete (Unless noted otherwise) ..... Class AAA
Concrete (Precast) ..... Class P
Concrete (Deck) ..... Class "AAA" - Deck
Reinforcing Steel ..... ASTM A615/A615M, Grade 60 (Epoxy Coated, Unless Otherwise Noted)

Structural Steel:
All Material (except as noted) ..... ASTM A709/A709M, Grade 50W
High Strength Bolts (except as noted) ..... ASTM A325, Type 3
Prestressing Strand ..... AASHTO M203 (ASTM A416), Grade 270, Low Relaxation

BASIC DESIGN STRESSES

Concrete ..... f 'c = 4,500 psi
Concrete (Precast) ..... f 'c = 5,000 psi
f 'ci = 4,000 psi
Reinforcing Steel ..... f y = 60,000 psi
Structural Steel:
ASTM A 709/A 709M, Grade 50W ..... F y = 50,000 psi
ASTM A 709/A 709M, Grade 36 ..... F y = 36,000 psi
ASTM A 325 ..... F μ = 120,000 psi
Prestressing Strand ..... F μ = 270,000 psi

TRAFFIC DATA - LUNT'S HILL ROAD

AADT 170
Heavy Trucks (% AADT) ..... N/A
Design Speed (MPH) 45
Functional Class ..... Rural Local

Scale: 20 0 20 40
Scale of Feet

No.	Revision	By	Date

Designed by:
VHB Vanasse Hangen Brustlin, Inc.

CONSULTANT PROJECT MANAGER: T. Bryant

	By	Date		By	Date
Designed	GME	12/14	Checked	LSC	12/14
Drawn	CMD	12/14	In Charge of	TSB	12/14

VANASSE HANGEN BRUSTLIN, INC.
500 Southborough Dr.
Suite 105B
South Portland, ME 04106
TEL (207) 889-3150
FAX (207) 253-5596

MAINE TURNPIKE

THE GOLD STAR MEMORIAL HIGHWAY

MTA PROJECT MANAGER: Ralph Norwood

SUPERSTRUCTURE REPLACEMENT
LUNT'S HILL ROAD UNDERPASS

BRIDGE PLAN AND ELEVATION

VHB: 55041.00
CONTRACT: 2015.10

SHEET NUMBER: 31

Date: 12/12/2014

Filename: ...\cad\st\planset\031_genplan.dgn

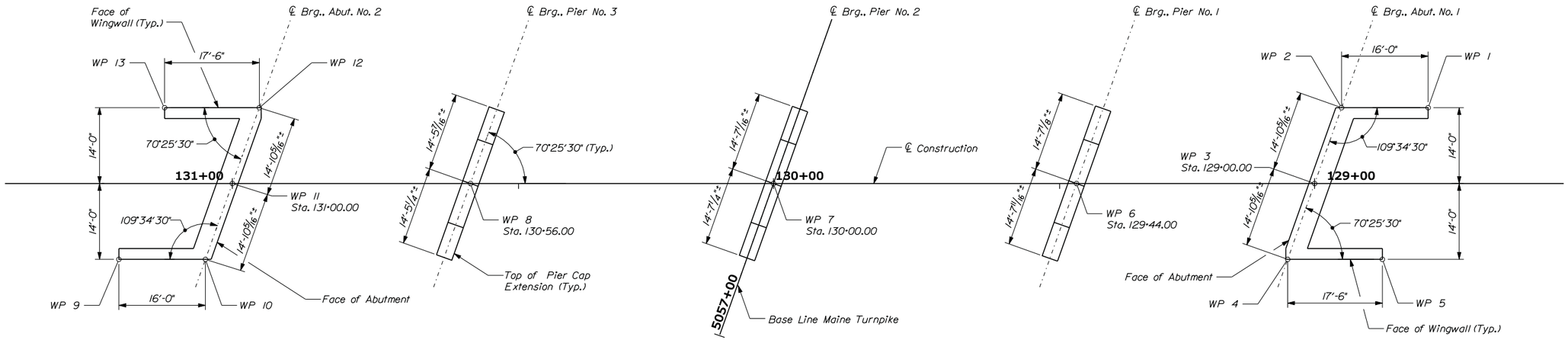

SURVEY LAYOUT

BRIDGE LAYOUT NOTES

1. The centerline construction location and alignment of Lunt's Hill Road is based on existing plans and survey points obtained at pier caps and wingwalls.

WP No.	Northing	Easting
1	490188.6765	1118882.9793
2	490192.6084	1118867.4694
3	490180.2611	1118859.2034
4	490167.9138	1118850.9374
5	490163.6135	1118867.9000
6	490191.0736	1118816.5526
7	490204.8351	1118762.2698
8	490218.5965	1118707.9870
9	490220.9937	1118641.5604
10	490217.0617	1118657.0702
11	490229.4090	1118665.3362
12	490241.7564	1118673.6022
13	490246.0566	1118656.6396

Date:12/12/2014

Filename: ...\st\planset\032_survey_01.dgn

Scale: 3/32" = 1'-0"

No.	Revision	By	Date

Designed by:

Vanasse Hangen Brustlin, Inc.

CONSULTANT PROJECT MANAGER: T. Bryant

	By	Date		By	Date
Designed	GME	12/14	Checked	LSC	12/14
Drawn	CMD	12/14	In Charge of	TSB	12/14

VANASSE HANGEN BRUSTLIN, INC.
500 Southborough Dr.
Suite 105B
South Portland, ME 04106
TEL (207) 889-3150
FAX (207) 253-5596

MAINE TURNPIKE

THE GOLD STAR MEMORIAL HIGHWAY

MTA PROJECT MANAGER: Ralph Norwood

SUPERSTRUCTURE REPLACEMENT
LUNT'S HILL ROAD UNDERPASS

BRIDGE SURVEY LAYOUT PLAN

VHB: 55041.00
CONTRACT: 2015.10

SHEET NUMBER: 32

ABUTMENT REMOVAL NOTES

1. Contractor shall remove tactyl (bituminous) coating from remaining exposed abutment surfaces where present to finished grade or existing ground (whichever is lower). Cost included in Item 202.17.

2. Concrete demolition, which generally includes portions of wingwalls, portions of bridge seat, and abutment backwalls, will be measured for payment under pay Item 202.17, Removing Existing Structural Concrete. This work shall include sawcutting and removing existing concrete and reinforcing steel to the limits shown in the plans.

3. Excavation required to complete partial abutment removal and construction will not be measured for payment and considered incidental to Item 202.17. Backfill of the repair areas shall be measured for payment under pay Item 203.25, Granular Borrow as shown in the plans.

4. All existing reinforcement shall be retained, cleaned, and straightened unless otherwise approved by the Resident.

DEMOLITION QUANTITY (CY)

Removing Existing Structural Concrete 16.0

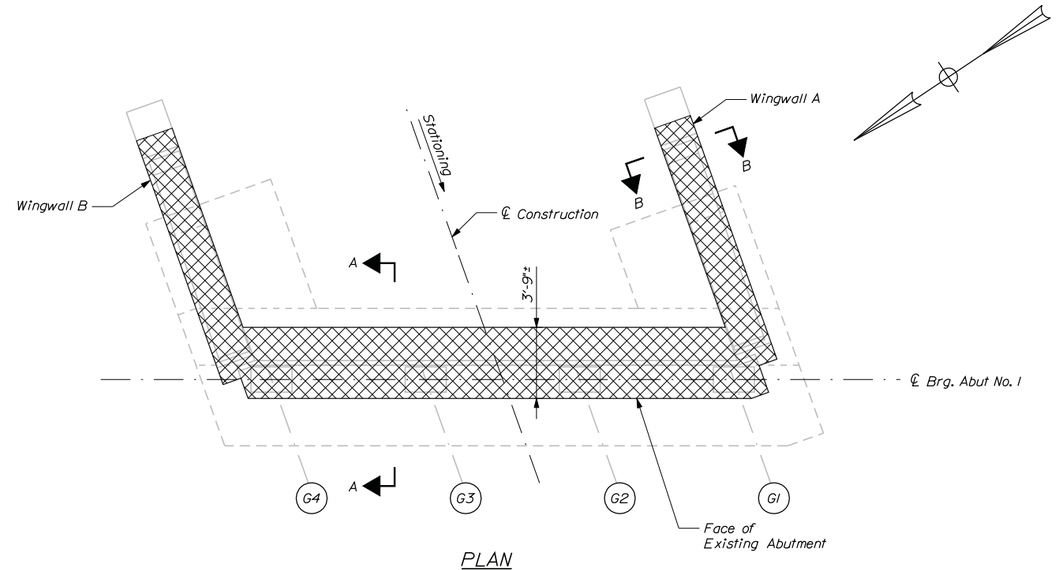

PLAN
Scale: 1/4" = 1'-0"

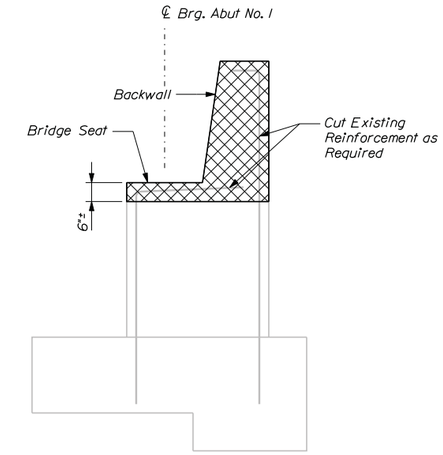

SECTION A-A
Scale: 1/2" = 1'-0"

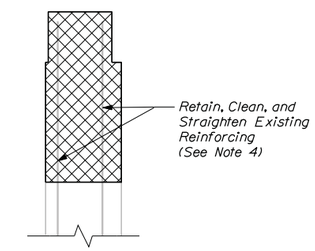

SECTION B-B
Scale: 1/2" = 1'-0"

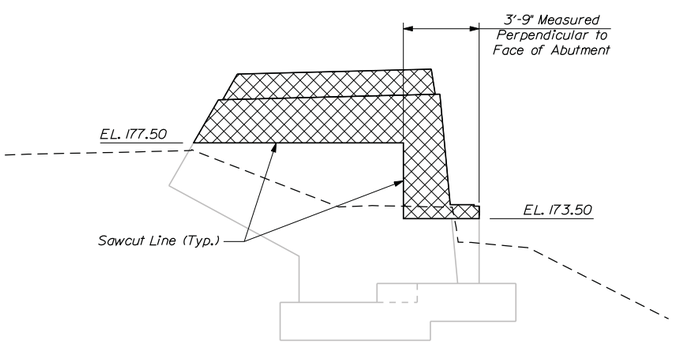

ELEVATION
WINGWALL B
Scale: 1/4" = 1'-0"

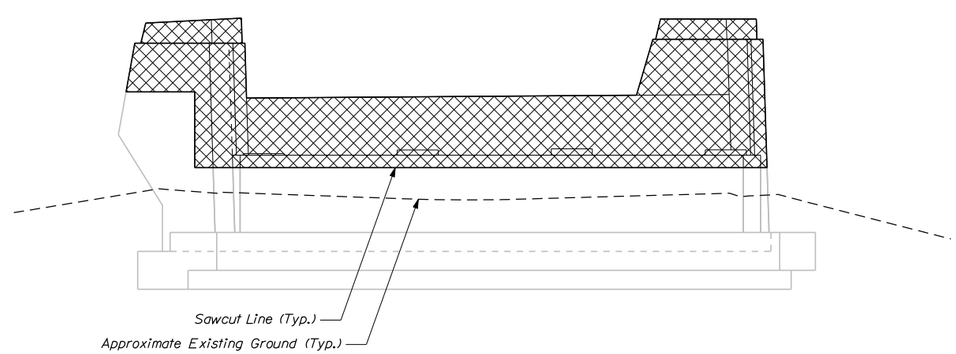

ELEVATION
Scale: 1/4" = 1'-0"

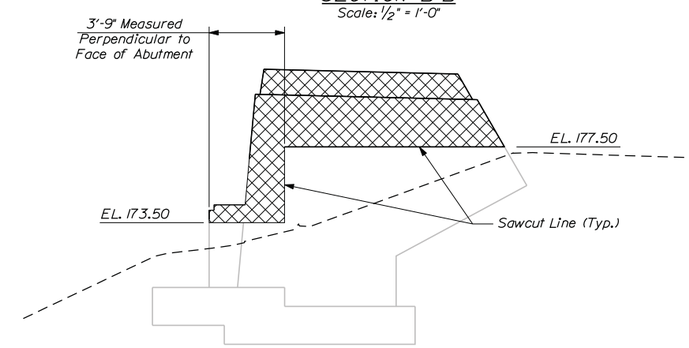

ELEVATION
WINGWALL A
Scale: 1/4" = 1'-0"

KEY

= Concrete Removal (Item 202.17)

Date:12/12/2014

Filename: ...\planset\033_abutment1_01.dgn

Scale:

No.	Revision	By	Date

Designed by:

VHB Vanasse Hangen Brustlin, Inc.

CONSULTANT PROJECT MANAGER: T. Bryant

	By	Date		By	Date
Designed	GME	12/14	Checked	LSC	12/14
Drawn	CMD	12/14	In Charge of	TSB	12/14

VANASSE HANGEN BRUSTLIN, INC.
500 Southborough Dr.
Suite 105B
South Portland, ME 04106
TEL (207) 889-3150
FAX (207) 253-5596

MAINE TURNPIKE

THE GOLD STAR MEMORIAL HIGHWAY

MTA PROJECT MANAGER: Ralph Norwood

SUPERSTRUCTURE REPLACEMENT
LUNT'S HILL ROAD UNDERPASS

ABUTMENT NO. 1
REMOVAL

VHB: 55041.00
CONTRACT: 2015.10

SHEET NUMBER: 33

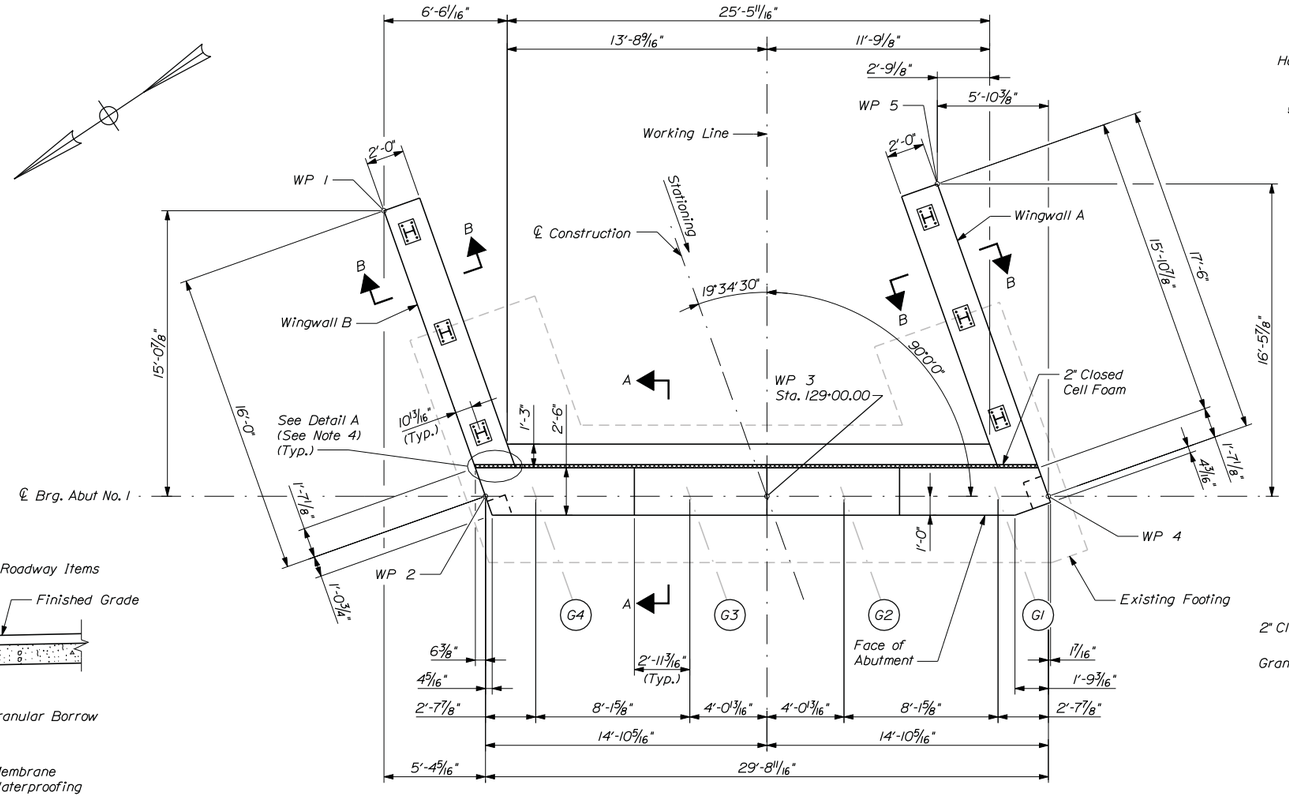

PLAN

Scale: 1/4" = 1'-0"

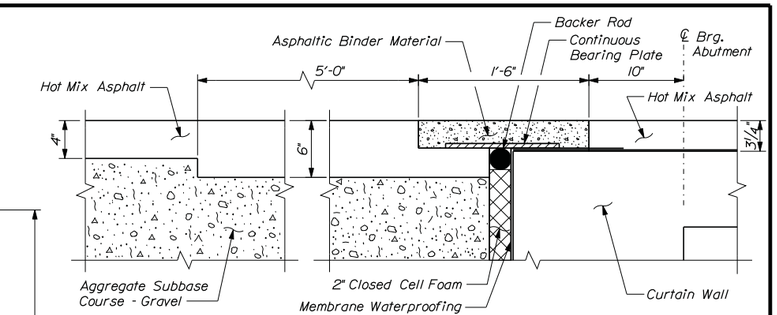

ASPHALTIC PLUG JOINT DETAIL

Scale: 1 1/2" = 1'-0"

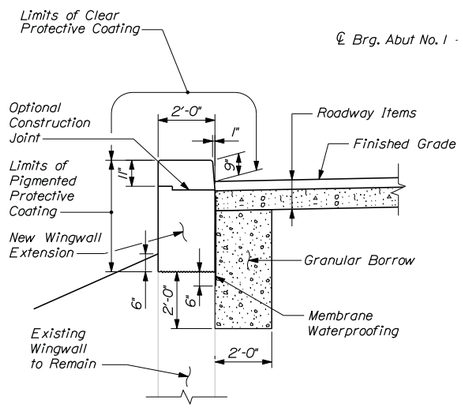

SECTION B-B

Scale: 3/8" = 1'-0"

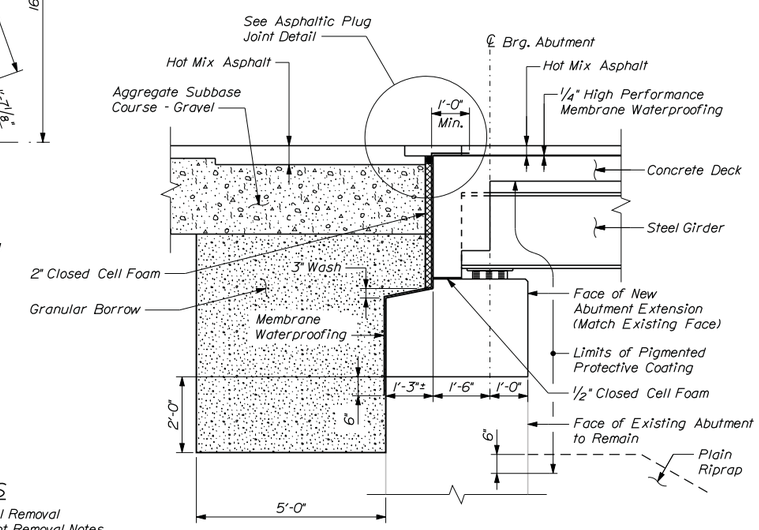

SECTION A-A

Scale: 1/2" = 1'-0"

SHEET NOTES

1. See Abutment No. 1 Removal Sheet for Abutment Removal Notes.
2. See Abutment No. 1 Reinforcement Sheet for Abutment Construction Notes.
3. See Abutment Wingwalls Reinforcement Sheet for Wingwall Reinforcement.
4. See Abutment No. 2 Modifications Sheet for Detail A.

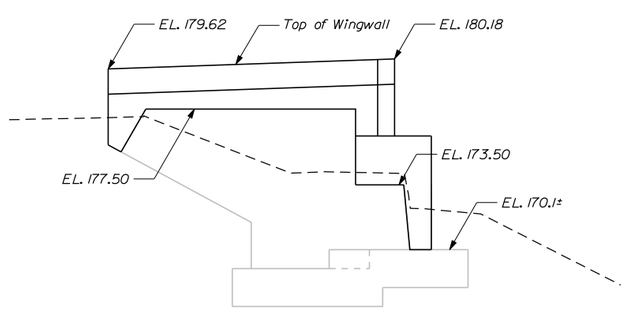

ELEVATION WINGWALL B

Scale: 1/4" = 1'-0"

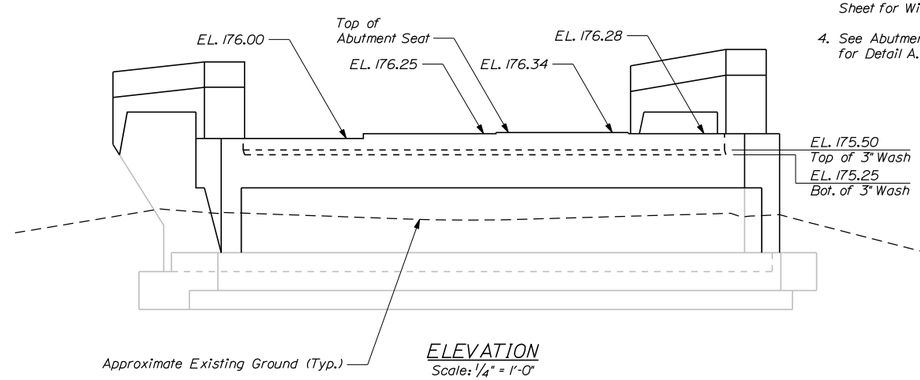

ELEVATION

Scale: 1/4" = 1'-0"

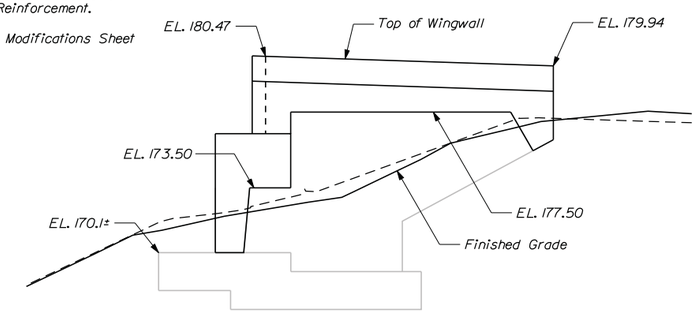

ELEVATION WINGWALL A

Scale: 1/4" = 1'-0"

Date:12/12/2014

Filename: ...\planset\034_abutment1_02.dgn

Scale:

No.	Revision	By	Date

Designed by:

Vanasse Hangen Brustlin, Inc.

CONSULTANT PROJECT MANAGER: T. Bryant

	By	Date		By	Date
Designed	GME	12/14	Checked	LSC	12/14
Drawn	CMD	12/14	In Charge of	TSB	12/14

VANASSE HANGEN BRUSTLIN, INC.
500 Southborough Dr.
Suite 105B
South Portland, ME 04106
TEL (207) 889-3150
FAX (207) 253-5596

MAINE TURNPIKE

THE GOLD STAR MEMORIAL HIGHWAY

MTA PROJECT MANAGER: Ralph Norwood

SUPERSTRUCTURE REPLACEMENT
LUNT'S HILL ROAD UNDERPASS

ABUTMENT NO. 1
MODIFICATIONS

VHB: 55041.00
CONTRACT: 2015.10

SHEET NUMBER: 34

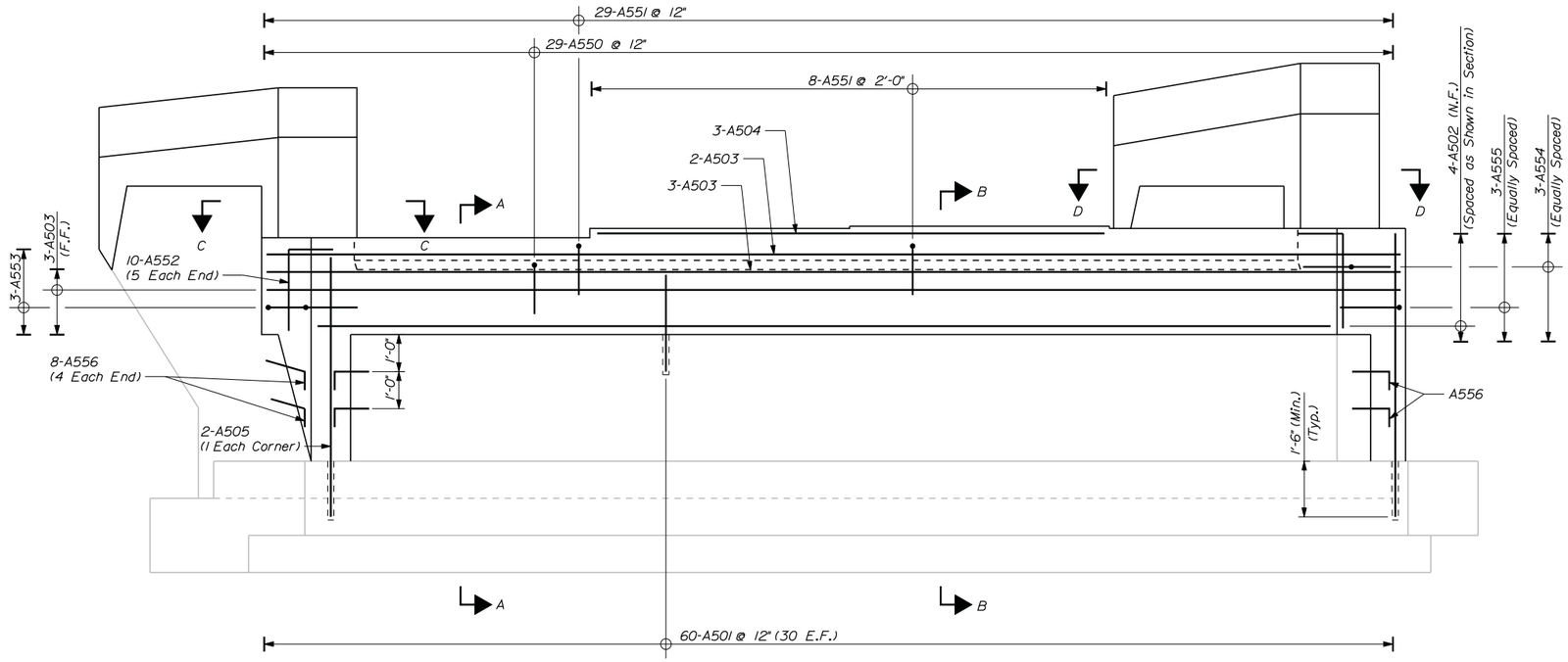

ELEVATION
Scale: 1/2" = 1'-0"

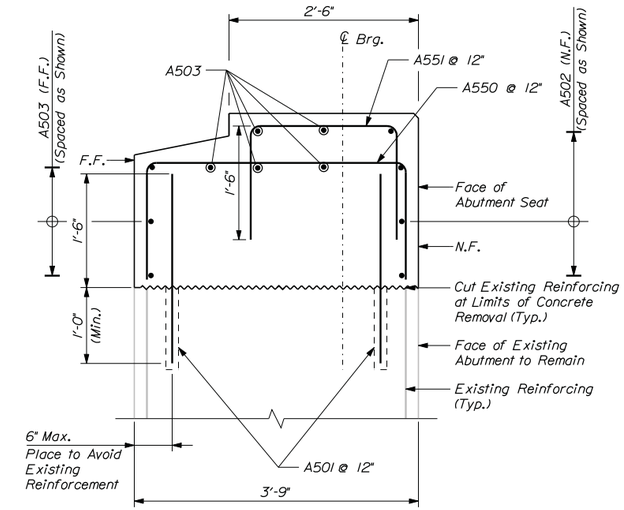

SECTION A-A
Scale: 1" = 1'-0"

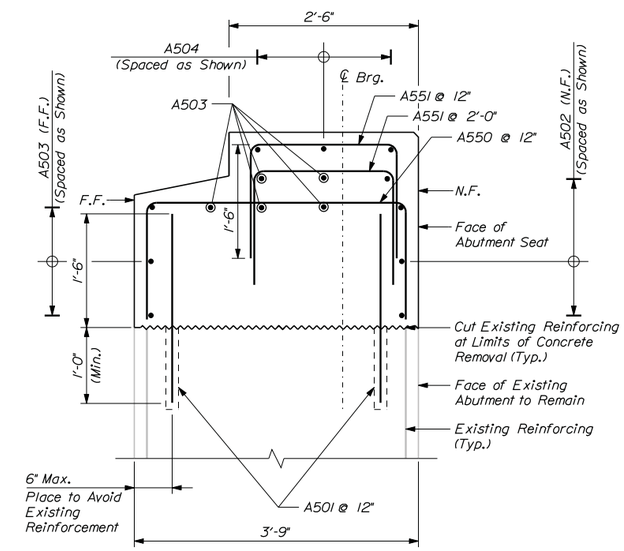

SECTION B-B
Scale: 1" = 1'-0"

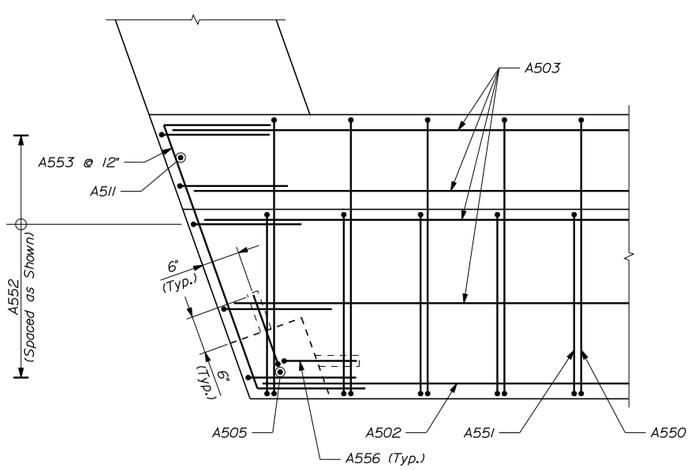

SECTION C-C
(Dowels not Shown)
Scale: 1" = 1'-0"

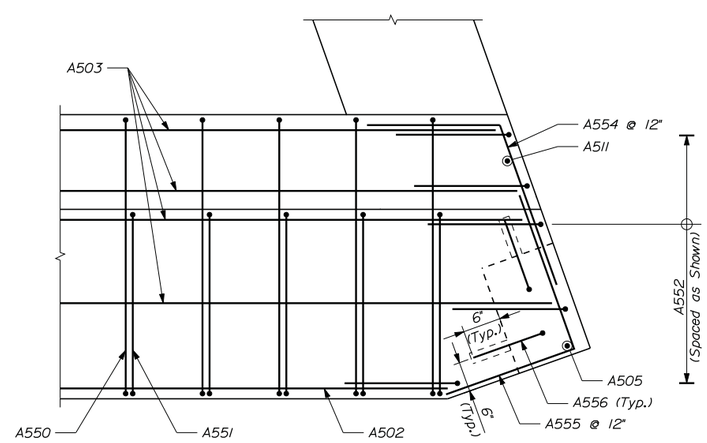

SECTION D-D
(Dowels not Shown)
Scale: 1" = 1'-0"

REINFORCING KEY

N.F. = Near Face
F.F. = Far Face
E.F. = Each Face
▲ = Cut in Field

ABUTMENT CONSTRUCTION NOTES

1. Remove abutment seat concrete and reinforcing steel within the limits shown, including bearing anchor bolts. Retain and protect existing reinforcing steel where noted.
2. Install new reinforcing steel, drill and grout bars into existing concrete as required.
3. Install form work and fill forms with class AAA concrete.
4. Perform general finishing.

Date:12/12/2014

Filename: ...\plonset\035_abutment1_03.dgn

Scale:

No.	Revision	By	Date

Designed by:

VHB Vanasse Hangen Brustlin, Inc.

CONSULTANT PROJECT MANAGER: T. Bryant

	By	Date		By	Date
Designed	GME	12/14	Checked	LSC	12/14
Drawn	CMD	12/14	In Charge of	TSB	12/14

VANASSE HANGEN BRUSTLIN, INC.
500 Southborough Dr.
Suite 105B
South Portland, ME 04106
TEL (207) 889-3150
FAX (207) 253-5596

MAINE TURNPIKE

THE GOLD STAR MEMORIAL HIGHWAY

MTA PROJECT MANAGER: Ralph Norwood

SUPERSTRUCTURE REPLACEMENT
LUNT'S HILL ROAD UNDERPASS

ABUTMENT NO. 1
REINFORCEMENT

VHB: 55041.00
CONTRACT: 2015.10

SHEET NUMBER: 35

ABUTMENT REMOVAL NOTES

1. Contractor shall remove tactyl (bituminous) coating from remaining exposed abutment surfaces where present to finished grade or existing ground (whichever is lower). Cost included in Item 202.17.

2. Concrete demolition, which generally includes portions of wingwalls, portions of bridge seat, and abutment backwalls, will be measured for payment under pay Item 202.17, Removing Existing Structural Concrete. This work shall include sawcutting and removing existing concrete and reinforcing steel to the limits shown in the plans.

3. Excavation required to complete partial abutment removal and construction will not be measured for payment and considered incidental to Item 202.17. Backfill of the repair areas shall be measured for payment under pay Item 203.25, Granular Borrow as shown in the plans.

4. All existing reinforcement shall be retained, cleaned, and straightened unless otherwise approved by the Resident.

DEMOLITION QUANTITY (CY)

Removing Existing Structural Concrete 19.0

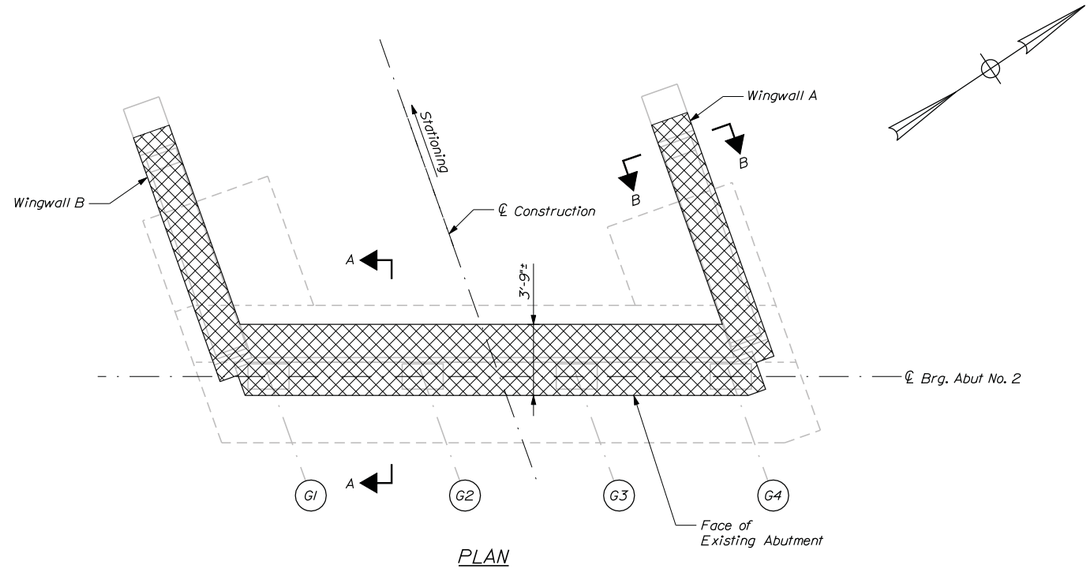

PLAN
Scale: 1/4" = 1'-0"

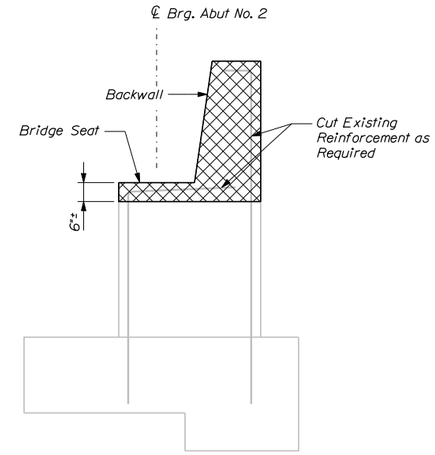

SECTION A-A
Scale: 1/2" = 1'-0"

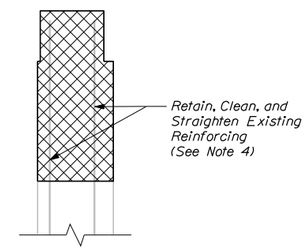

SECTION B-B
Scale: 1/2" = 1'-0"

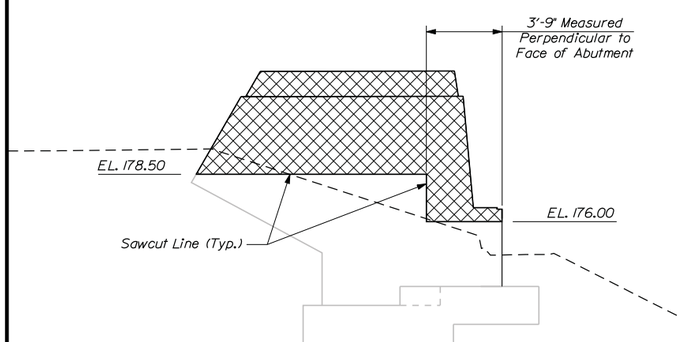

ELEVATION
WINGWALL B
Scale: 1/4" = 1'-0"

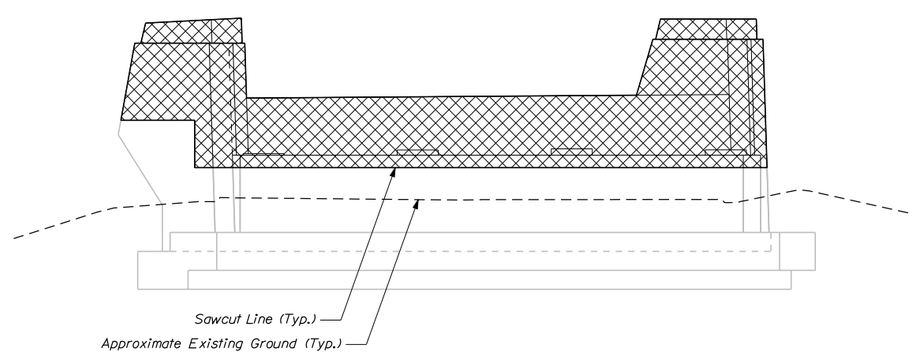

ELEVATION
Scale: 1/4" = 1'-0"

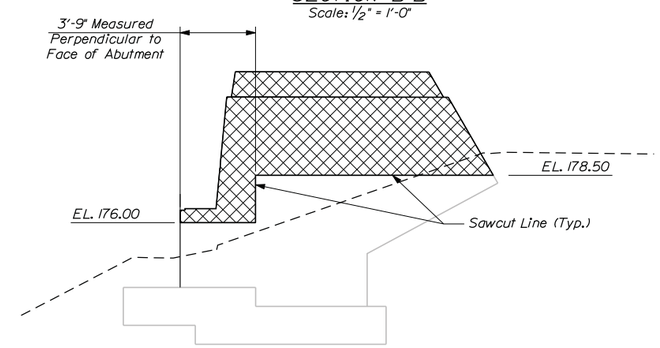

ELEVATION
WINGWALL A
Scale: 1/4" = 1'-0"

KEY

= Concrete Removal (Item 202.17)

Date:12/12/2014

Filename: ...\planset\036_abutment2_01.dgn

Scale:

No.	Revision	By	Date

Designed by:

VHB Vanasse Hangen Brustlin, Inc.

CONSULTANT PROJECT MANAGER: T. Bryant

	By	Date		By	Date
Designed	GME	12/14	Checked	LSC	12/14
Drawn	CMD	12/14	In Charge of	TSB	12/14

VANASSE HANGEN BRUSTLIN, INC.
500 Southborough Dr.
Suite 105B
South Portland, ME 04106
TEL (207) 889-3150
FAX (207) 253-5596

MAINE TURNPIKE

THE GOLD STAR MEMORIAL HIGHWAY

MTA PROJECT MANAGER: Ralph Norwood

SUPERSTRUCTURE REPLACEMENT
LUNT'S HILL ROAD UNDERPASS

ABUTMENT NO. 2
REMOVAL

VHB: 55041.00
CONTRACT: 2015.10

SHEET NUMBER: 36

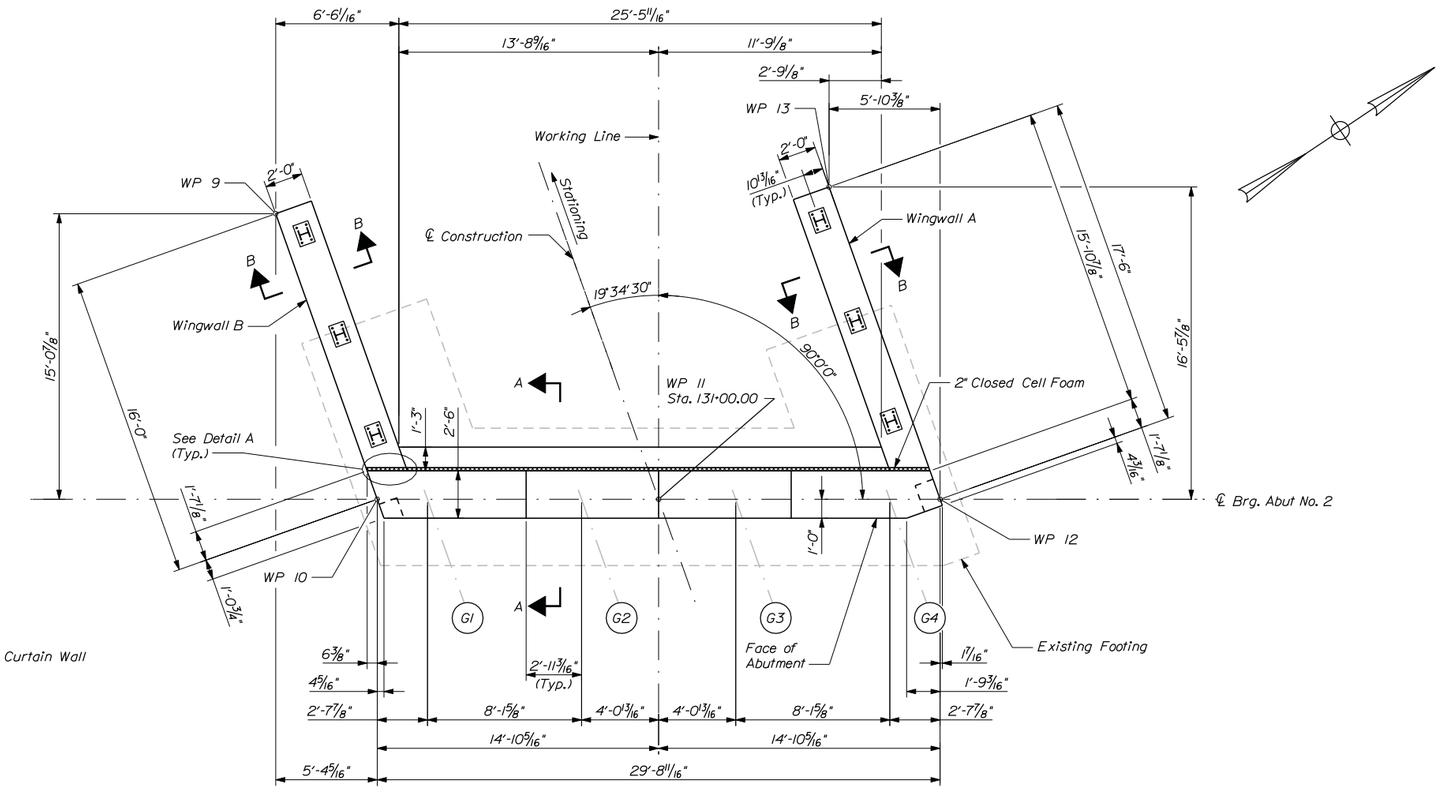

PLAN
Scale: 1/4" = 1'-0"

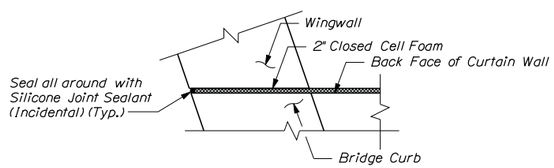

DETAIL A
Scale: 3/4" = 1'-0"

SHEET NOTES

1. See Abutment No. 1 Removal Sheet for Abutment Removal Notes.
2. See Abutment No. 1 Reinforcement Sheet for Abutment Construction Notes.
3. See Abutment Wingwalls Reinforcement Sheet for Wingwall Reinforcement.
4. See Abutment No. 1 Modifications Sheet for Sections A-A and B-B.

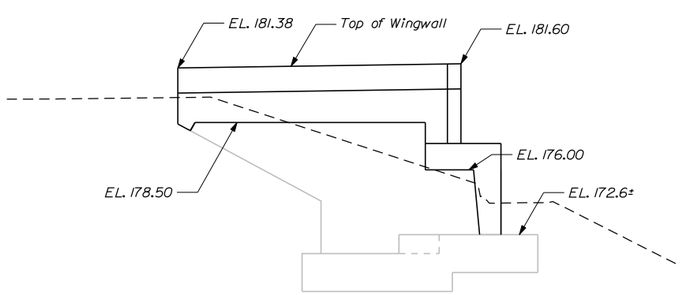

ELEVATION
WINGWALL B
Scale: 1/4" = 1'-0"

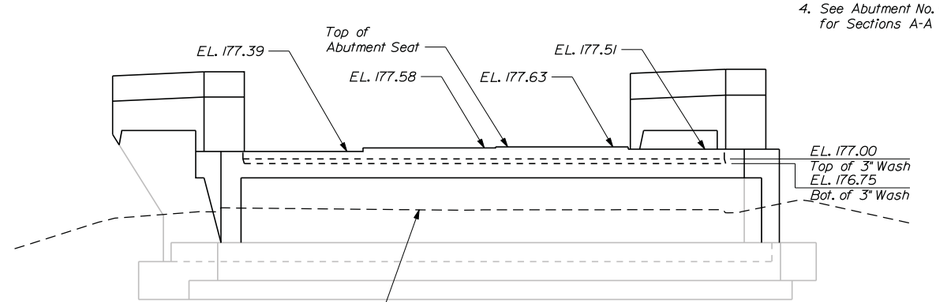

ELEVATION
Scale: 1/4" = 1'-0"

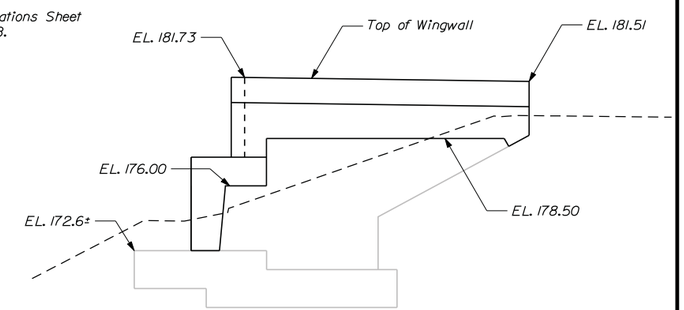

ELEVATION
WINGWALL A
Scale: 1/4" = 1'-0"

Date:12/12/2014

Filename: ...\plonset\037_abutment2_02.dgn

Scale:

No.	Revision	By	Date

Designed by:

Vanasse Hangen Brustlin, Inc.

CONSULTANT PROJECT MANAGER: T. Bryant

	By	Date		By	Date
Designed	GME	12/14	Checked	LSC	12/14
Drawn	CMD	12/14	In Charge of	TSB	12/14

VANASSE HANGEN BRUSTLIN, INC.
500 Southborough Dr.
Suite 105B
South Portland, ME 04106
TEL (207) 889-3150
FAX (207) 253-5596

MAINE TURNPIKE

THE GOLD STAR MEMORIAL HIGHWAY

MTA PROJECT MANAGER: Ralph Norwood

SUPERSTRUCTURE REPLACEMENT
LUNT'S HILL ROAD UNDERPASS

ABUTMENT NO. 2
MODIFICATIONS

VHB: 55041.00
CONTRACT: 2015.10

SHEET NUMBER: 37

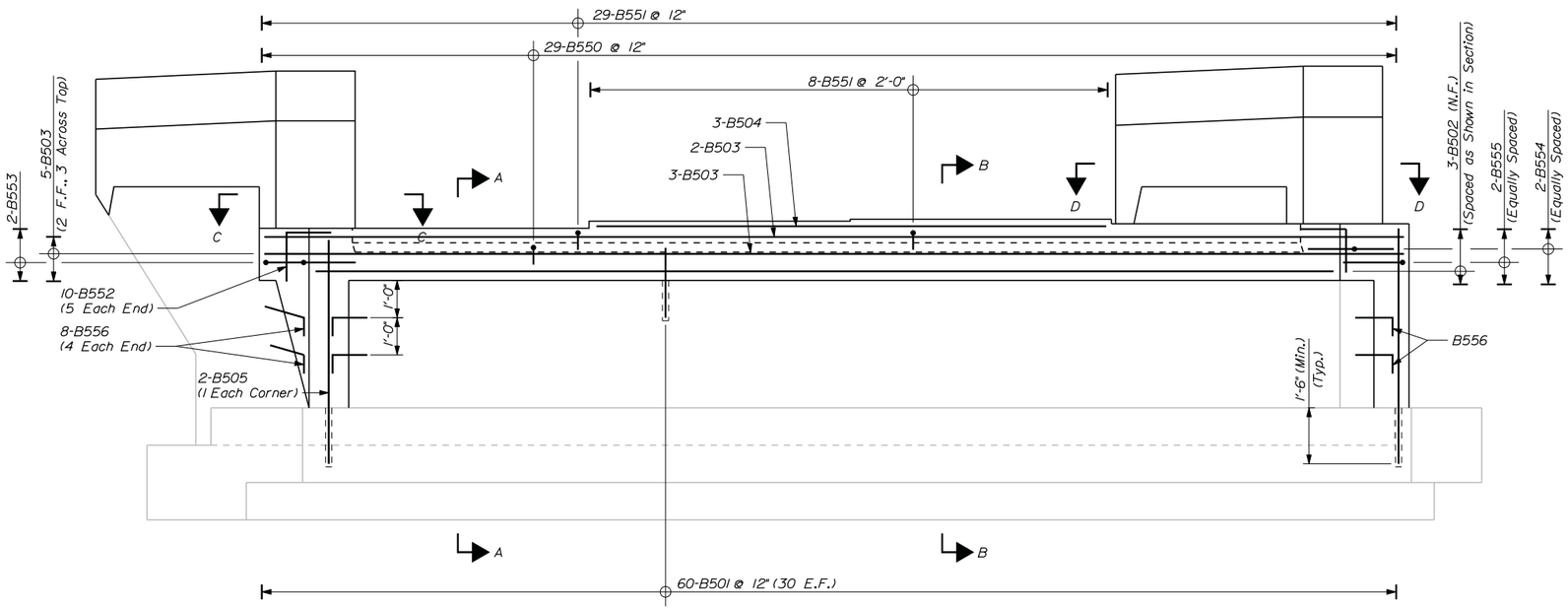

ELEVATION
Scale: 1/2" = 1'-0"

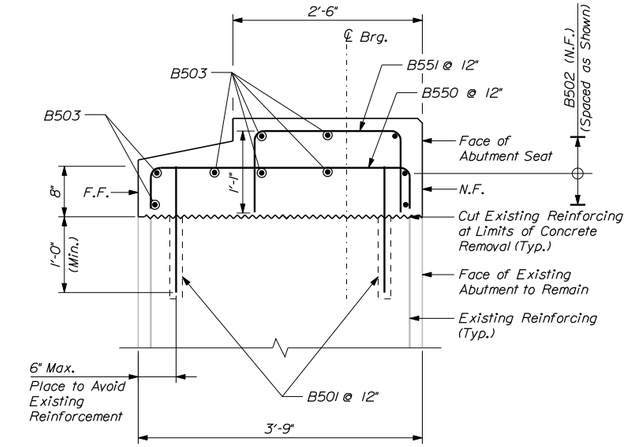

SECTION A-A
Scale: 1" = 1'-0"

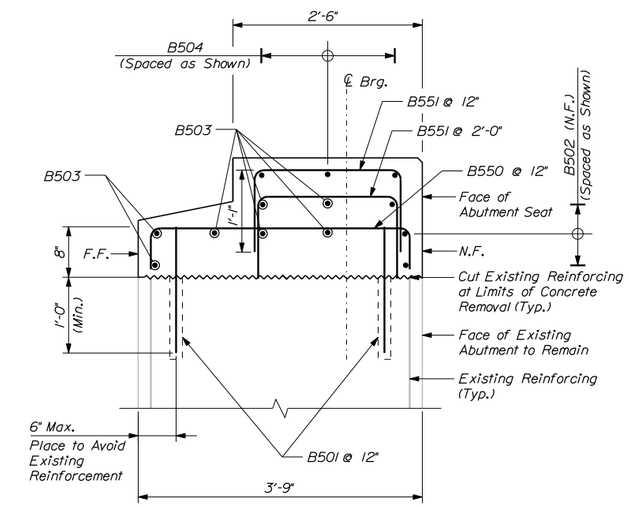

SECTION B-B
Scale: 1" = 1'-0"

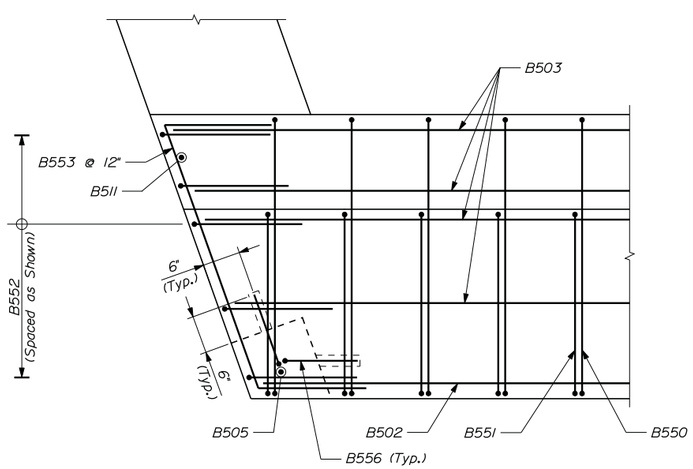

SECTION C-C
(Dowels not Shown)
Scale: 1" = 1'-0"

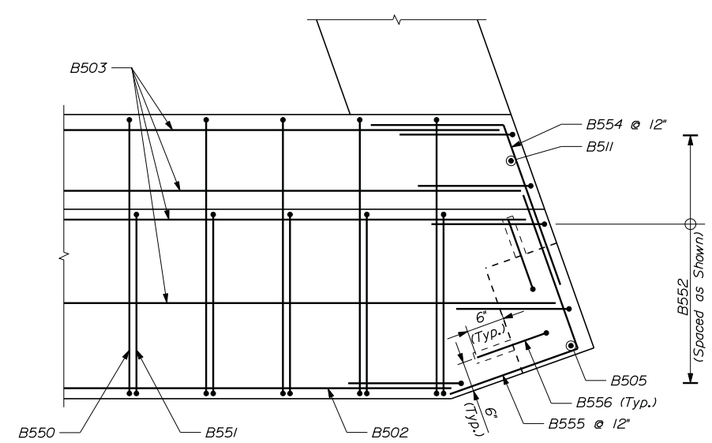

SECTION D-D
(Dowels not Shown)
Scale: 1" = 1'-0"

REINFORCING KEY

N.F. = Near Face
F.F. = Far Face
E.F. = Each Face
▲ = Cut in Field

SHEET NOTE

1. See Abutment No. 1 Reinforcement Sheet for Abutment Construction Notes.

Date:12/12/2014

Filename: ...\planset\038_abutment2_03.dgn

Scale:

No.	Revision	By	Date

Designed by:

VHB Vanasse Hangen Brustlin, Inc.

CONSULTANT PROJECT MANAGER: T. Bryant

	By	Date		By	Date
Designed	GME	12/14	Checked	LSC	12/14
Drawn	CMD	12/14	In Charge of	TSB	12/14

VANASSE HANGEN BRUSTLIN, INC.
500 Southborough Dr.
Suite 105B
South Portland, ME 04106
TEL (207) 889-3150
FAX (207) 253-5596

MAINE TURNPIKE

THE GOLD STAR MEMORIAL HIGHWAY

MTA PROJECT MANAGER: Ralph Norwood

SUPERSTRUCTURE REPLACEMENT
LUNT'S HILL ROAD UNDERPASS

ABUTMENT NO. 2
REINFORCEMENT

VHB: 55041.00
CONTRACT: 2015.10

SHEET NUMBER: 38

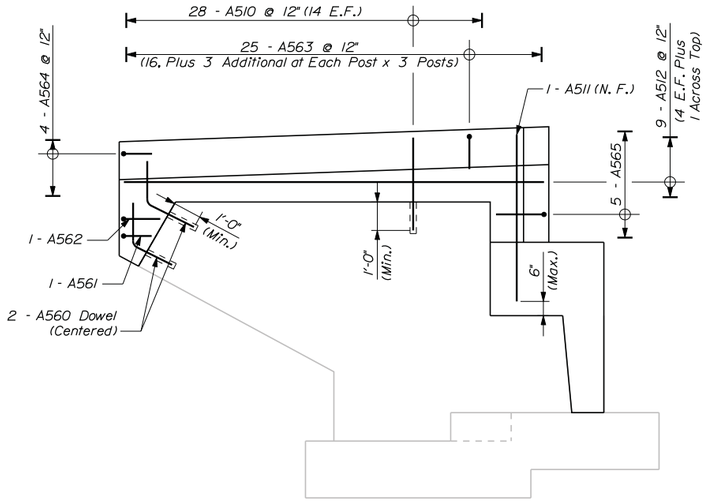

WINGWALL B ELEVATION

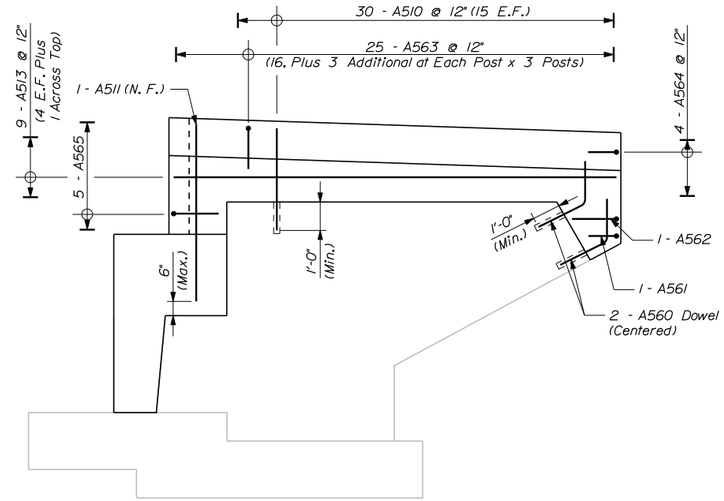

WINGWALL A ELEVATION

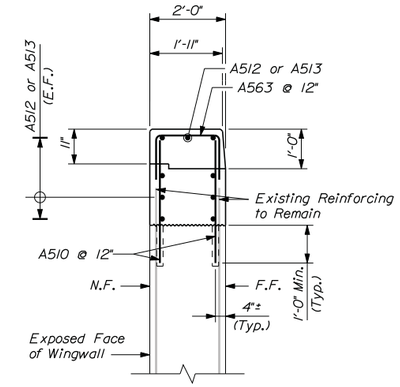

TYPICAL WINGWALL SECTION
ABUTMENT NO. 1
Scale: 1/2" = 1'-0"

ABUTMENT NO. 1 WINGWALLS REINFORCEMENT
Scale: 3/8" = 1'-0"

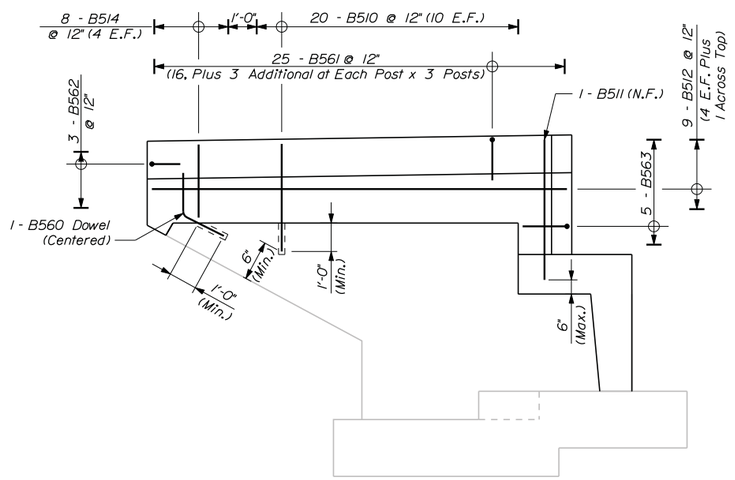

WINGWALL B ELEVATION

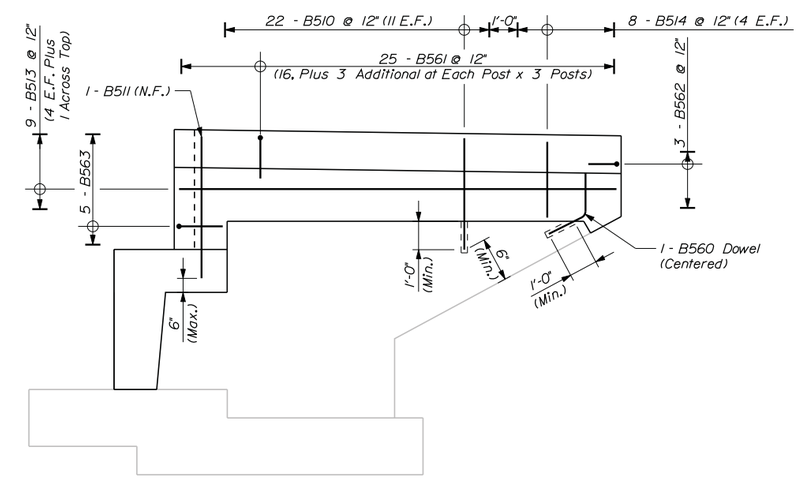

WINGWALL A ELEVATION

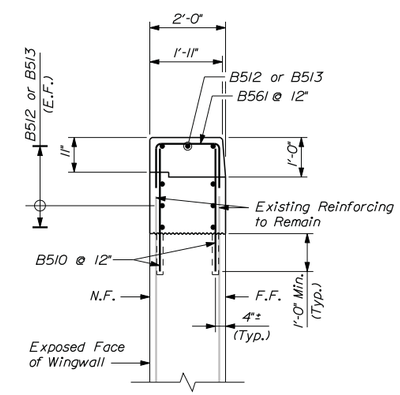

TYPICAL WINGWALL SECTION
ABUTMENT NO. 2
Scale: 1/2" = 1'-0"

ABUTMENT NO. 2 WINGWALLS REINFORCEMENT
Scale: 3/8" = 1'-0"

REINFORCING KEY

N.F. = Near Face
F.F. = Far Face
E.F. = Each Face
▲ = Cut in Field

Date:12/12/2014

Filename: ...\st\planset\039_wingwall_00.dgn

Scale: AS NOTED

No.	Revision	By	Date

Designed by:

VHB Vanasse Hangen Brustlin, Inc.

CONSULTANT PROJECT MANAGER: T. Bryant

	By	Date		By	Date
Designed	GME	12/14	Checked	LSC	12/14
Drawn	CMD	12/14	In Charge of	TSB	12/14

VANASSE HANGEN BRUSTLIN, INC.
500 Southborough Dr.
Suite 105B
South Portland, ME 04106
TEL (207) 889-3150
FAX (207) 253-5596

MAINE TURNPIKE

THE GOLD STAR MEMORIAL HIGHWAY

MTA PROJECT MANAGER: Ralph Norwood

SUPERSTRUCTURE REPLACEMENT
LUNT'S HILL ROAD UNDERPASS

ABUTMENT WINGWALLS REINFORCEMENT

VHB: 55041.00
CONTRACT: 2015.10

SHEET NUMBER: 39

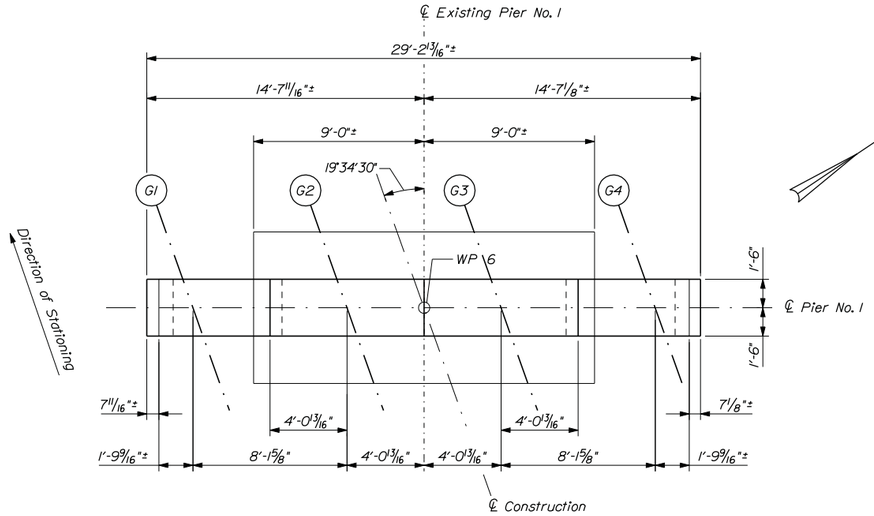

PIER NO. 1 - PLAN

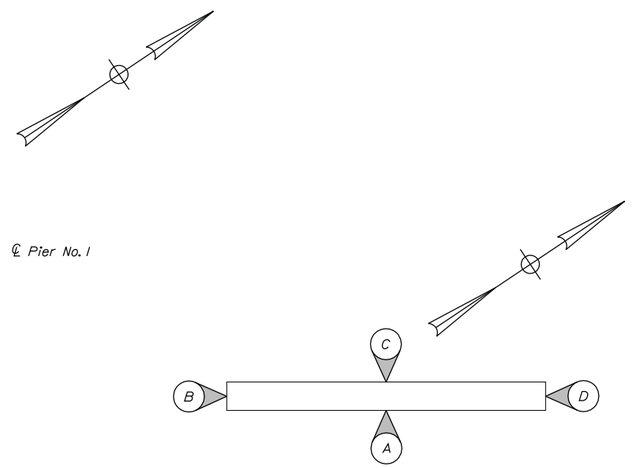

PIER ELEVATION KEY

PIER REPAIR AND MODIFICATIONS NOTES

1. Pier repair work shall include: providing access for pier inspection and pier surface patch repairs.
2. Where pier surface patch repairs are specified the work shall include removal of unsound concrete and placement and curing of the repair materials. Repairs shall be measured for payment under Item 518.20, Pier Repairs.
3. All existing anchor rods shall be cut and removed to one inch above existing pedestals.
4. Actual repair areas will be determined by the Resident during construction. If pier surface patch repairs are required to extend more that 1/3 the width of the column stem the work shall be sequenced such that removal of the column concrete is limited to no more than 1/3 of the column width at any one time. The removal restrictions do not apply to the ends of the pier column stem.
5. Pier cap modifications shall not be performed when traffic is active on the roadway above unless authorized by the Resident.
6. Prior to the placement of pier extension concrete, The Contractor shall intentionally roughen the top surface of the existing pier caps to 1/2" anchor profile as directed by The Resident. Cost for intentionally roughening surface shall be incidental to Item 502.23.
7. All exposed pier surfaces shall be coated with a protective coating for concrete surfaces as shown.
8. Bearing anchor rods shall be placed before installing diaphragms.
9. All excavation required for the pier repair and protective coating application shall be incidental to Item 518.20.

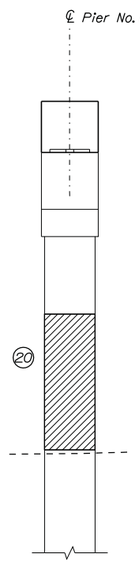

ELEVATION B

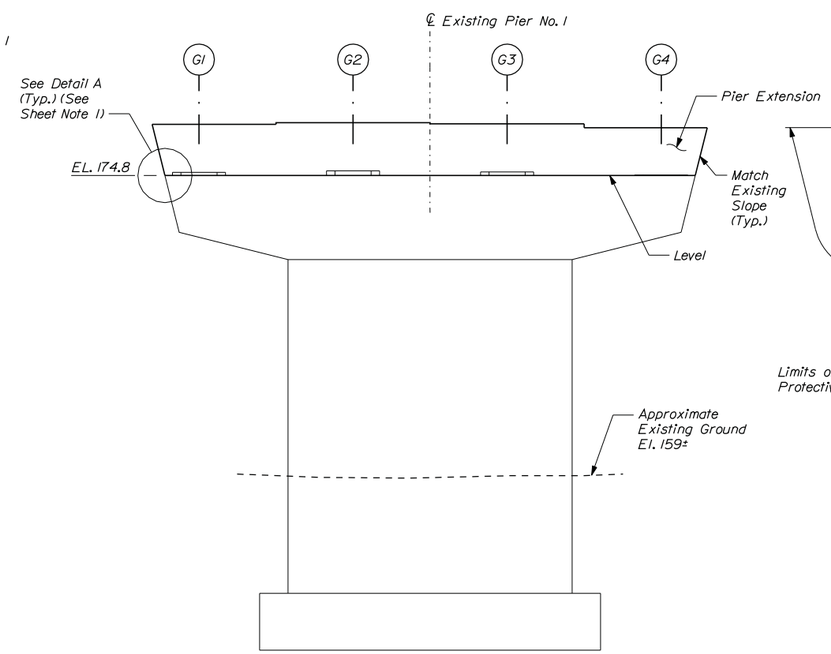

ELEVATION A

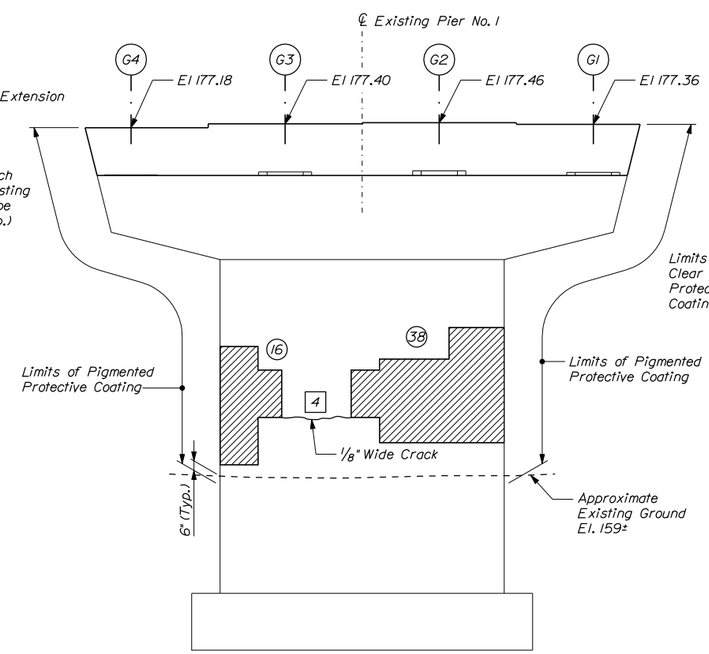

ELEVATION C

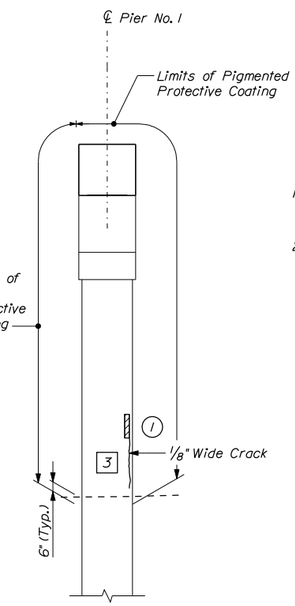

ELEVATION D

SHEET NOTES

1. See Pier No. 3 Repair and Modifications Sheet for Detail A.
2. See Concrete Surface Repair Detail and Notes on Pier No. 2 Repair and Modifications Sheet.

REPAIR QUANTITIES (SF)

Pier Surface Patch Repairs	75

KEY

- = Surface Patch Repair (Item 518.20)
- = Limit of Crack Repair
- (#) = Square Foot Area of Repair
- [#] = Linear Feet of Crack Repair

Date:12/12/2014

Filename: ...\st\planset\040_pier1_01.dgn

Scale: 1/4" = 1'-0"

No.	Revision	By	Date

Designed by:

VHB Vanasse Hangen Brustlin, Inc.

CONSULTANT PROJECT MANAGER: T. Bryant

	By	Date		By	Date
Designed	GME	12/14	Checked	LSC	12/14
Drawn	CMD	12/14	In Charge of	TSB	12/14

VANASSE HANGEN BRUSTLIN, INC.
500 Southborough Dr.
Suite 105B
South Portland, ME 04106
TEL (207) 889-3150
FAX (207) 253-5596

MAINE TURNPIKE

THE GOLD STAR MEMORIAL HIGHWAY

MTA PROJECT MANAGER: Ralph Norwood

SUPERSTRUCTURE REPLACEMENT
LUNT'S HILL ROAD UNDERPASS

PIER NO. 1 REPAIR AND MODIFICATIONS

VHB: 55041.00
CONTRACT: 2015.10

SHEET NUMBER: 40

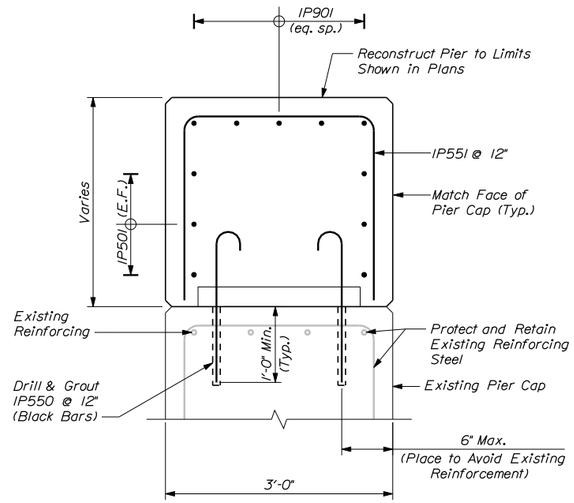

SECTION A-A
Scale: 1" = 1'-0"

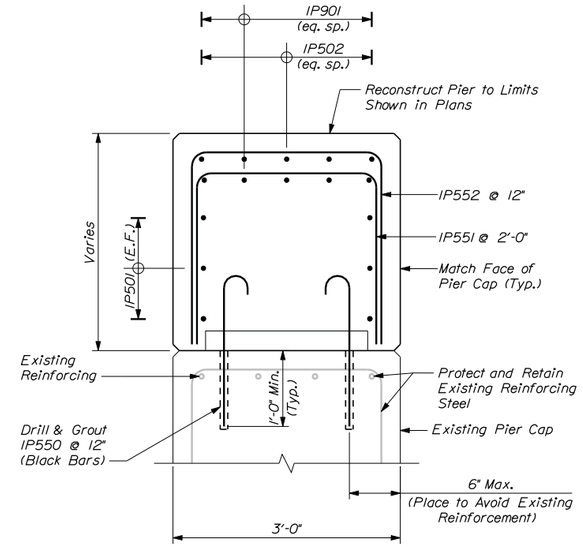

SECTION B-B
Scale: 1" = 1'-0"

NOTE

1. Adjust longitudinal reinforcement to ensure anchor rods and reinforcement do not conflict.

SHEET NOTE

1. See Pier Repair and Modifications Notes on Pier No. 1 Repair and Modifications Sheet.

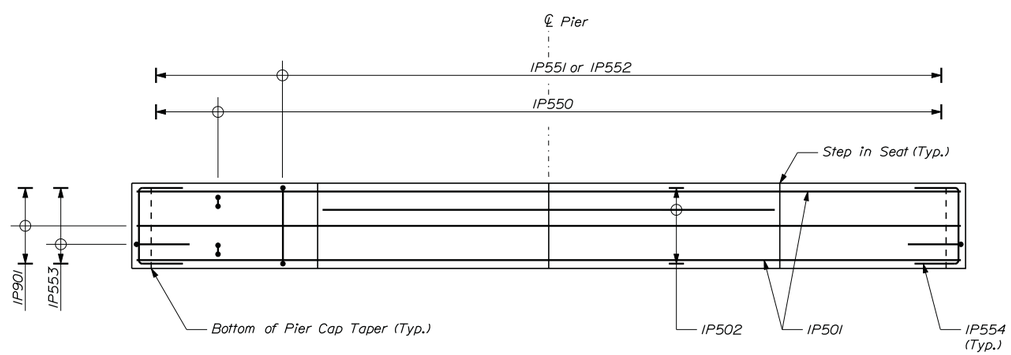

PLAN
Scale: 3/8" = 1'0"

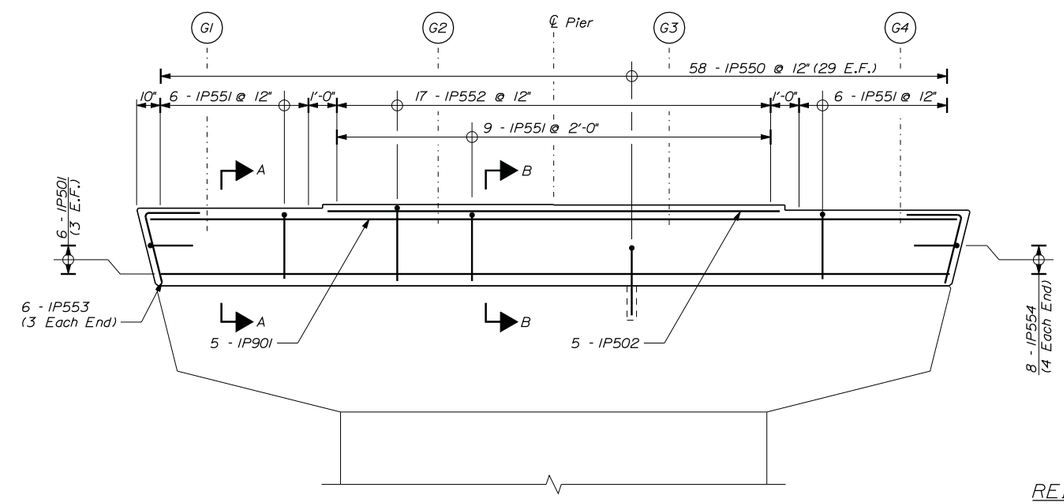

ELEVATION
Scale: 3/8" = 1'0"

REINFORCING KEY

N.F. = Near Face
F.F. = Far Face
E.F. = Each Face
▲ = Cut in Field

Date:12/12/2014

Filename: ...\st\planset\041_pier1_02.dgn

Scale: AS NOTED

No.	Revision	By	Date

Designed by:

Vanasse Hangen Brustlin, Inc.

CONSULTANT PROJECT MANAGER: T. Bryant

	By	Date		By	Date
Designed	GME	12/14	Checked	LSC	12/14
Drawn	CMD	12/14	In Charge of	TSB	12/14

VANASSE HANGEN BRUSTLIN, INC.
500 Southborough Dr.
Suite 105B
South Portland, ME 04106
TEL (207) 889-3150
FAX (207) 253-5596

MAINE TURNPIKE

THE GOLD STAR MEMORIAL HIGHWAY

MTA PROJECT MANAGER: Ralph Norwood

SUPERSTRUCTURE REPLACEMENT
LUNT'S HILL ROAD UNDERPASS

PIER CAP NO. 1 REINFORCEMENT

VHB: 55041.00
CONTRACT: 2015.10

SHEET NUMBER: 41

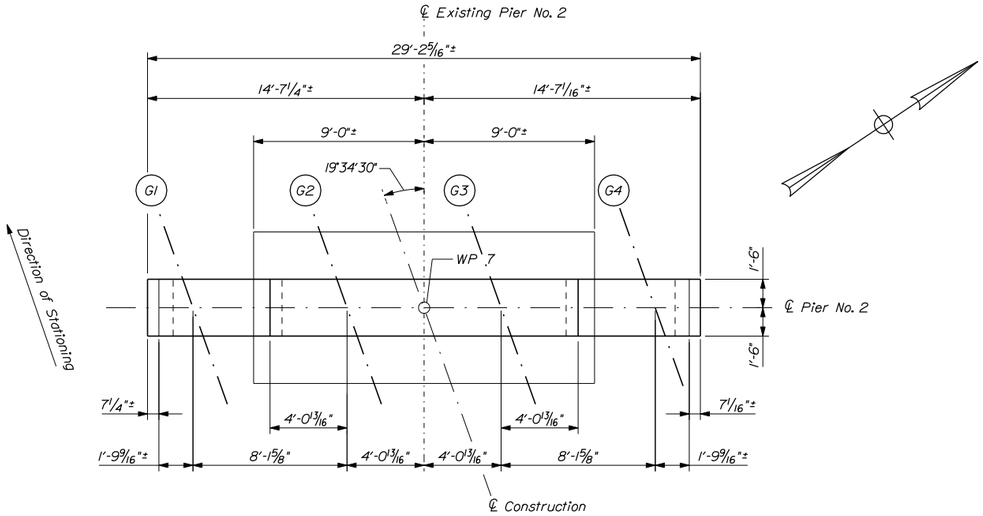

PIER NO. 2 - PLAN

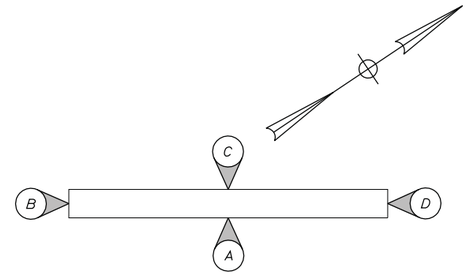

PIER ELEVATION KEY

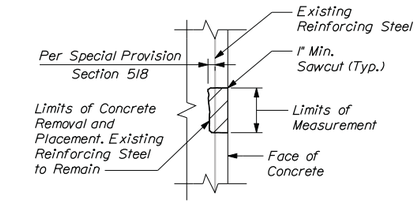

CONCRETE SURFACE REPAIR DETAIL

Not to Scale

CONCRETE SURFACE REPAIR NOTES

1. Prior to the start of concrete removal the Resident and the Contractor shall sound the concrete and agree on the repair limits. Estimated repair quantity may increase at the Resident's discretion.
2. Perform 1" deep saw cuts along limits of removal.
3. Chip concrete to depth shown. If the removal limits change during the demolition process the Contractor shall notify the Resident. The Resident and Contractor shall agree on the revised pay limits prior to the Contractor continuing the removal.
4. Prepare and patch repair areas with Class AAA concrete.
5. Perform general finishing.

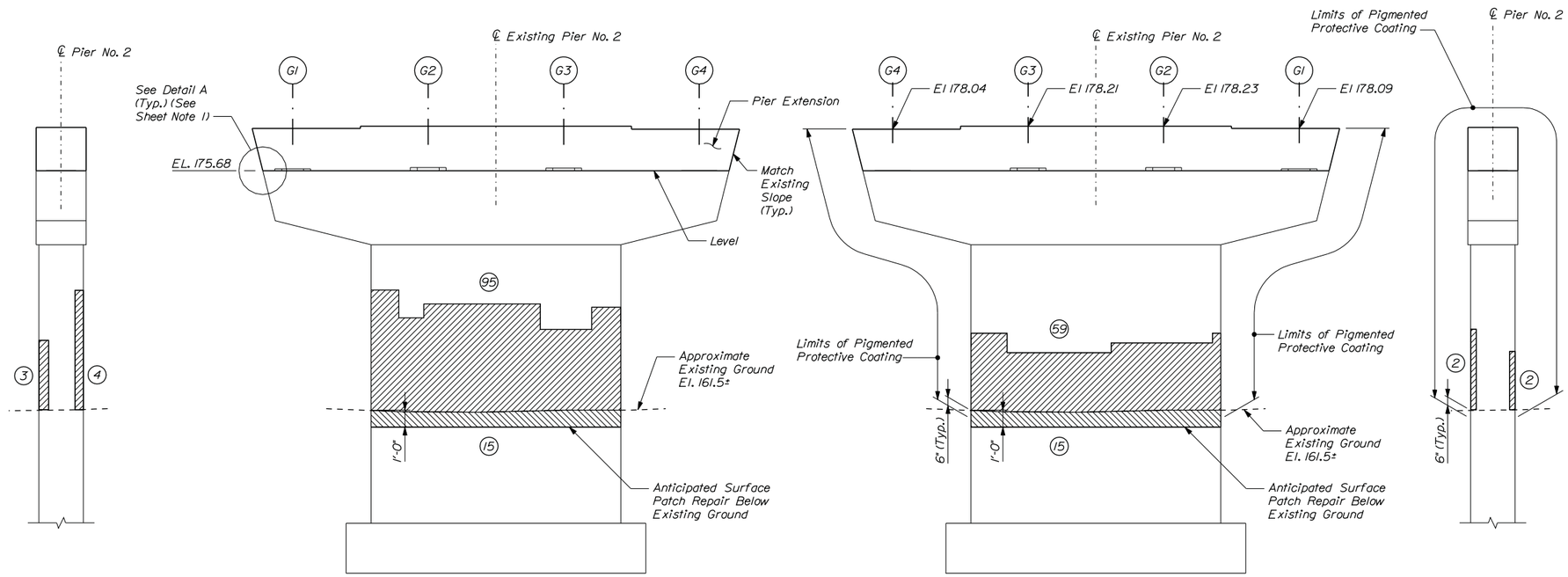

ELEVATION B

ELEVATION A

ELEVATION C

ELEVATION D

SHEET NOTES

1. See Pier No. 3 Repair and Modifications Sheet for Detail A.
2. See Pier Repair and Modifications Notes on Pier No. 1 Repair and Modifications Sheet.

REPAIR QUANTITIES (SF)

Pier Surface Patch Repairs	195

KEY

= Surface Patch Repair (Item 518.20)

= Limit of Crack Repair

(#) = Square Foot Area of Repair

[#] = Linear Feet of Crack Repair

Date:12/12/2014

Filename: ...\st\planset\042_pier2_01.dgn

Scale: 1/4" = 1'-0"

No.	Revision	By	Date

Designed by:

VHB Vanasse Hangen Brustlin, Inc.

CONSULTANT PROJECT MANAGER: T. Bryant

	By	Date		By	Date
Designed	GME	12/14	Checked	LSC	12/14
Drawn	CMD	12/14	In Charge of	TSB	12/14

VANASSE HANGEN BRUSTLIN, INC.
500 Southborough Dr.
Suite 105B
South Portland, ME 04106
TEL (207) 889-3150
FAX (207) 253-5596

MAINE TURNPIKE

THE GOLD STAR MEMORIAL HIGHWAY

MTA PROJECT MANAGER: Ralph Norwood

SUPERSTRUCTURE REPLACEMENT
LUNT'S HILL ROAD UNDERPASS

PIER NO. 2 REPAIR AND MODIFICATIONS

VHB: 55041.00 SHEET NUMBER: 42

CONTRACT: 2015.10

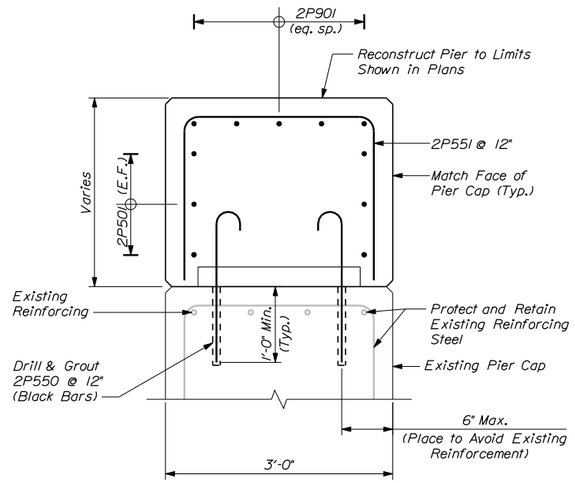

SECTION A-A
Scale: 1" = 1'-0"

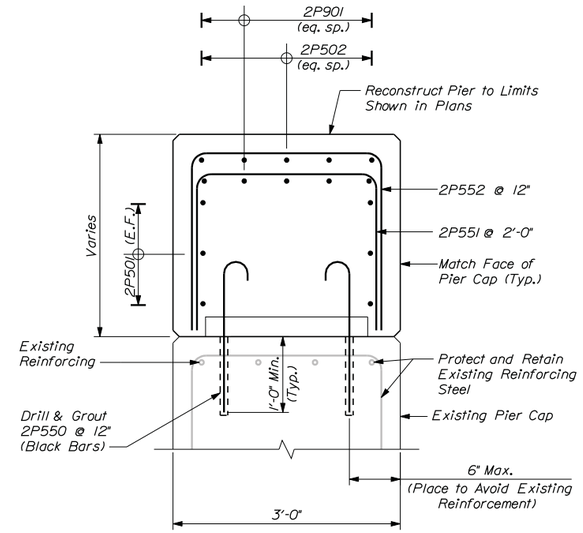

SECTION B-B
Scale: 1" = 1'-0"

NOTE

1. Adjust longitudinal reinforcement to ensure anchor rods and reinforcement do not conflict.

SHEET NOTE

1. See Pier Repair and Modifications Notes on Pier No. 1 Repair and Modifications Sheet.

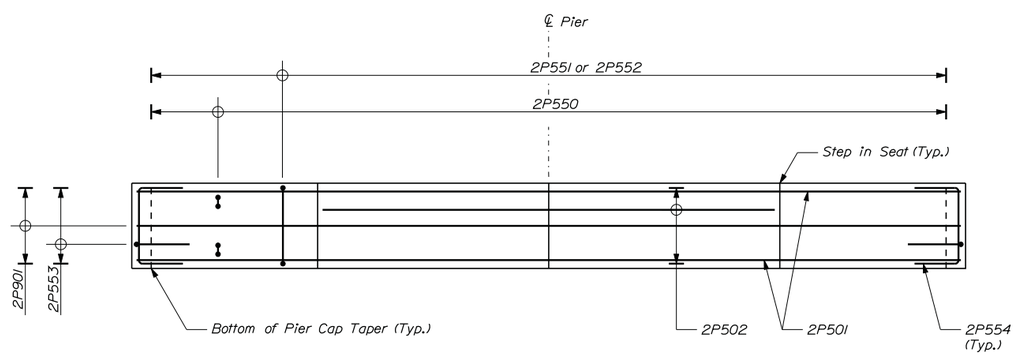

PLAN
Scale: 3/8" = 1'0"

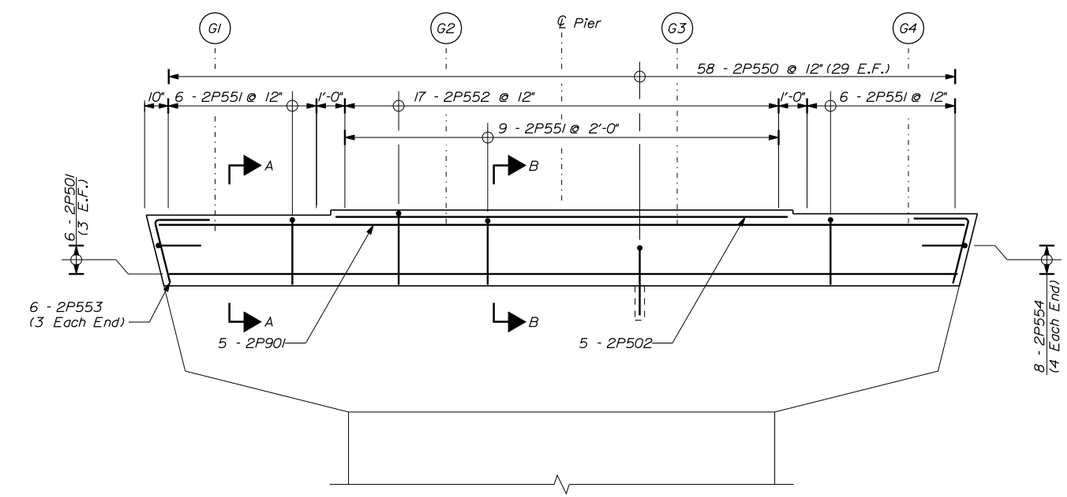

ELEVATION
Scale: 3/8" = 1'0"

REINFORCING KEY

N.F. = Near Face
F.F. = Far Face
E.F. = Each Face
▲ = Cut in Field

Date:12/12/2014

Filename: ...\st\planset\043_pier2_02.dgn

Scale: AS NOTED

No.	Revision	By	Date

Designed by:

Vanasse Hangen Brustlin, Inc.

CONSULTANT PROJECT MANAGER: T. Bryant

	By	Date		By	Date
Designed	GME	12/14	Checked	LSC	12/14
Drawn	CMD	12/14	In Charge of	TSB	12/14

VANASSE HANGEN BRUSTLIN, INC.
500 Southborough Dr.
Suite 105B
South Portland, ME 04106
TEL (207) 889-3150
FAX (207) 253-5596

MAINE TURNPIKE

THE GOLD STAR MEMORIAL HIGHWAY

MTA PROJECT MANAGER: Ralph Norwood

SUPERSTRUCTURE REPLACEMENT
LUNT'S HILL ROAD UNDERPASS

PIER CAP NO. 2 REINFORCEMENT

VHB: 55041.00
CONTRACT: 2015.10

SHEET NUMBER: 43

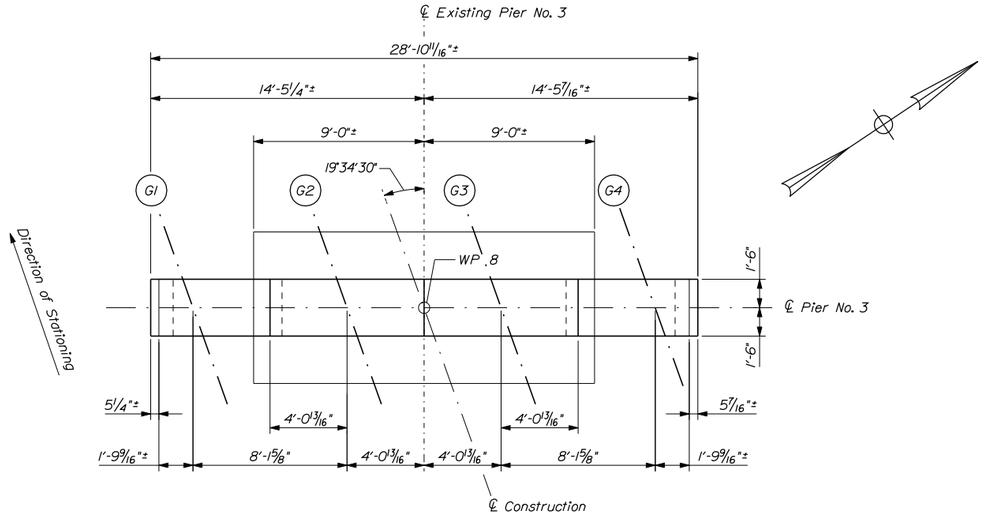

PIER NO. 3 - PLAN

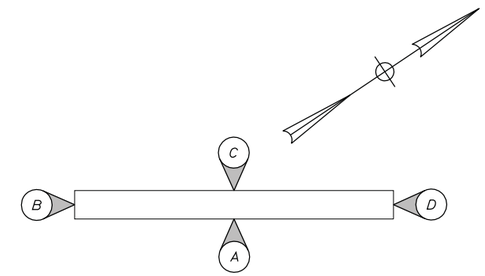

PIER ELEVATION KEY

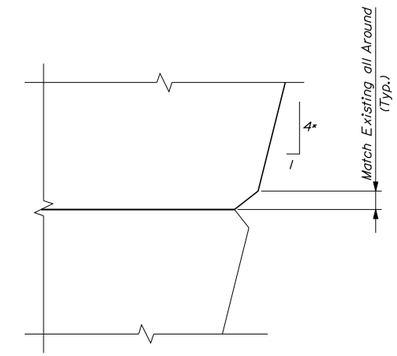

DETAIL A
* Match Existing
Not to Scale

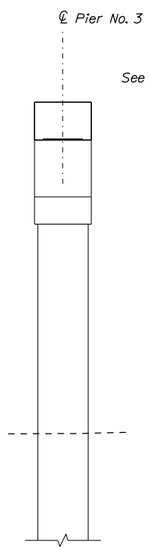

ELEVATION B

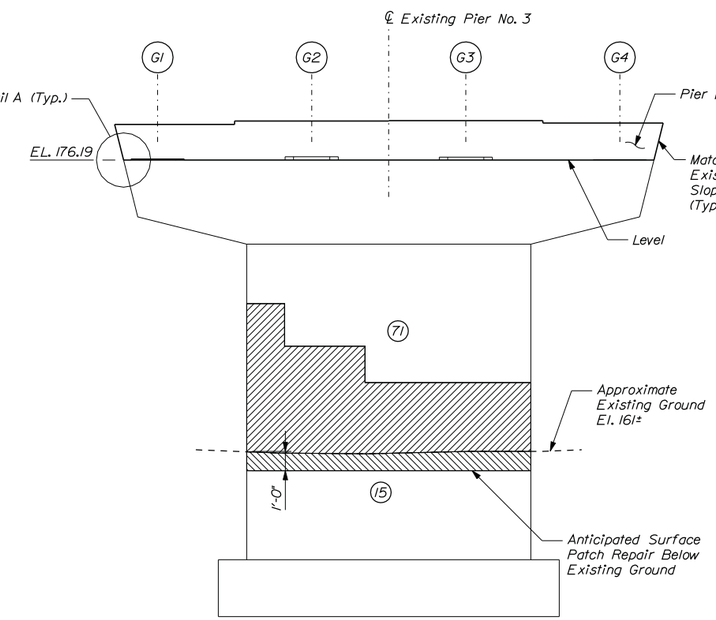

ELEVATION A

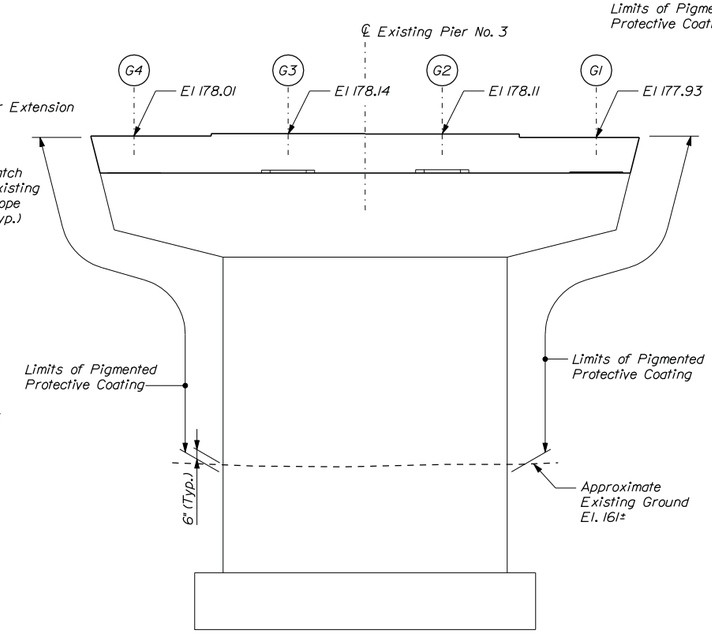

ELEVATION C

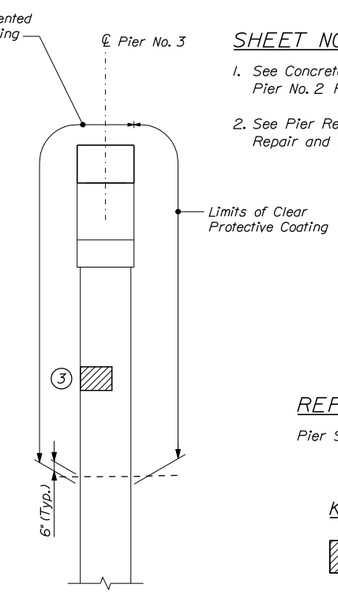

ELEVATION D

SHEET NOTES

1. See Concrete Surface Repair Detail and Notes on Pier No. 2 Repair and Modifications Sheet.
2. See Pier Repair and Modifications Notes on Pier No. 1 Repair and Modifications Sheet.

REPAIR QUANTITIES (SF)

Pier Surface Patch Repairs	89

KEY

- = Surface Patch Repair (Item 518.20)
- = Limit of Crack Repair
- (#) = Square Foot Area of Repair
- [#] = Linear Feet of Crack Repair

Date:12/12/2014

Filename: ...\st\planset\044_pier3_01.dgn

Scale: 1/4" = 1'-0"

No.	Revision	By	Date

Designed by:

VHB Vanasse Hangen Brustlin, Inc.

CONSULTANT PROJECT MANAGER: T. Bryant

	By	Date		By	Date
Designed	GME	12/14	Checked	LSC	12/14
Drawn	CMD	12/14	In Charge of	TSB	12/14

VANASSE HANGEN BRUSTLIN, INC.
500 Southborough Dr.
Suite 105B
South Portland, ME 04106
TEL (207) 889-3150
FAX (207) 253-5596

MAINE TURNPIKE

THE GOLD STAR MEMORIAL HIGHWAY

MTA PROJECT MANAGER: Ralph Norwood

SUPERSTRUCTURE REPLACEMENT
LUNT'S HILL ROAD UNDERPASS

PIER NO. 3 REPAIR AND MODIFICATIONS

VHB: 55041.00
CONTRACT: 2015.10

SHEET NUMBER: 44

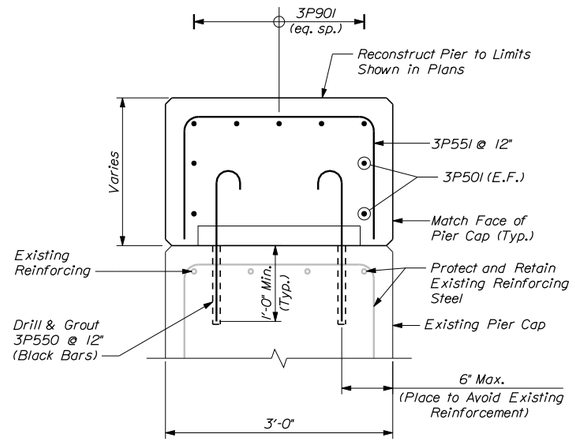

SECTION A-A
Scale: 1" = 1'-0"

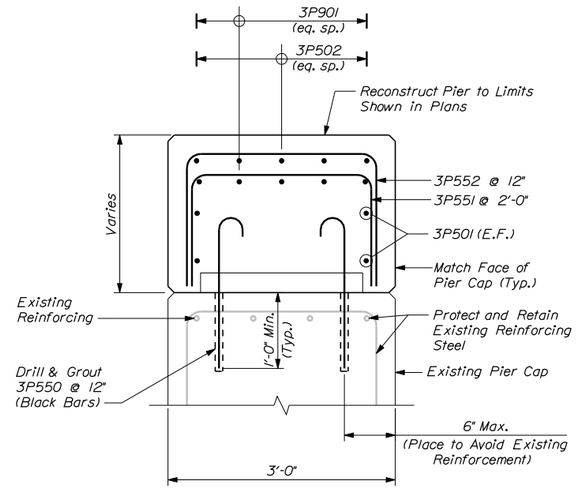

SECTION B-B
Scale: 1" = 1'-0"

NOTE

1. Adjust longitudinal reinforcement to ensure anchor rods and reinforcement do not conflict.

SHEET NOTE

1. See Pier Repair and Modifications Notes on Pier No. 1 Repair and Modifications Sheet.

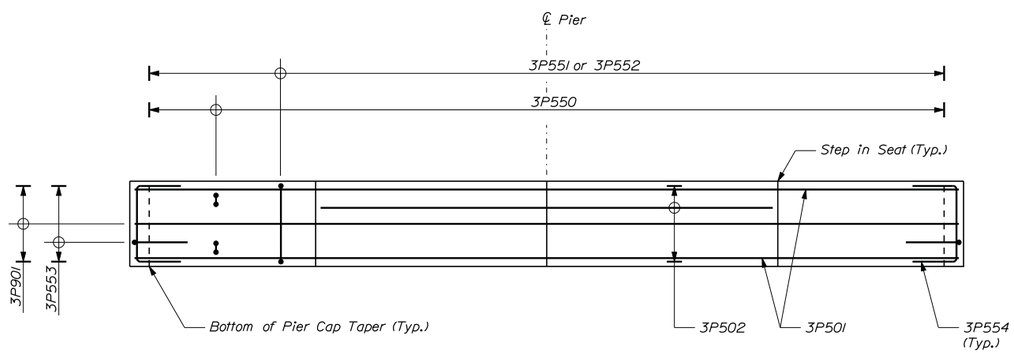

PLAN
Scale: 3/8" = 1'0"

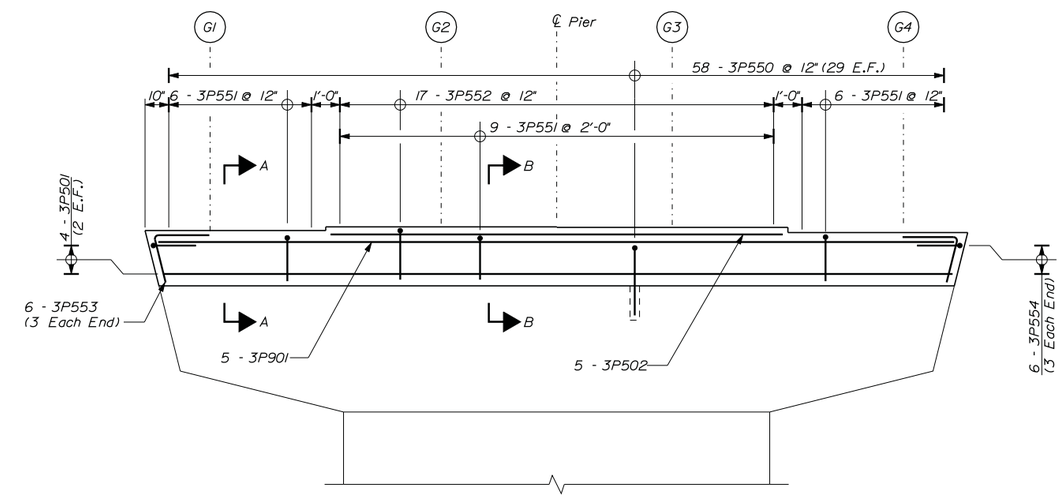

ELEVATION
Scale: 3/8" = 1'0"

REINFORCING KEY

N.F. = Near Face
F.F. = Far Face
E.F. = Each Face
▲ = Cut in Field

Date:12/12/2014

Filename: ...\st\planset\045_pier3_02.dgn

Scale: AS NOTED

No.	Revision	By	Date

Designed by:

Vanasse Hangen Brustlin, Inc.

CONSULTANT PROJECT MANAGER: T. Bryant

	By	Date		By	Date
Designed	GME	12/14	Checked	LSC	12/14
Drawn	CMD	12/14	In Charge of	TSB	12/14

VANASSE HANGEN BRUSTLIN, INC.
500 Southborough Dr.
Suite 105B
South Portland, ME 04106
TEL (207) 889-3150
FAX (207) 253-5596

MAINE TURNPIKE

THE GOLD STAR MEMORIAL HIGHWAY

MTA PROJECT MANAGER: Ralph Norwood

SUPERSTRUCTURE REPLACEMENT
LUNT'S HILL ROAD UNDERPASS

PIER CAP NO. 3 REINFORCEMENT

VHB: 55041.00
CONTRACT: 2015.10

SHEET NUMBER: 45

ELASTOMERIC BEARING NOTES

1. Elastomer shall be virgin Neoprene (Polychloroprene) with a durometer of 50.
2. Vulcanizing of the elastomer to the steel plates shall be done during the primary mold process.
3. Masonry plates, sole plates, and load plates shall meet the requirements of ASTM A709/A709M, Grade 50.
4. Horizontal PTFE at pier expansion bearings shall be dimpled and lubricated. Lubrication shall be supplied and installed per the bearing manufacturers recommendation to ensure a coefficient of friction less than or equal to 0.04 at 68 degrees F. Cost included in Bearing item.
5. All bearings shall be marked prior to shipping. The marks shall include the bearing location on the bridge and a direction arrow which points upstation. All marks shall be permanent and shall be visible after the bearing is installed.
6. Bearings shall be covered during transit.
7. All necessary precautions shall be taken to protect bearing components from field weld flash and spatter.
8. The bearings are designed so that the superstructure may be erected when the ambient air temperature is within the range of 65 degrees F and 90 degrees F. If the ambient air temperature is outside this range, the bridge shall be jacked and the bearings shall be reset as directed by the Resident.
9. Masonry Plates, Sole Plates, and Load Plates shall be painted (shop applied). See Special Provision Section 506.

ANCHOR ROD NOTES

1. All anchor rods, nuts, and plate washers shall be galvanized after fabrication in accordance with ASTM A153. Anchor rods shall be fully threaded.
2. Burr threads on anchor rods after nuts tightened snug to prevent removal. Touch up damaged galvanized areas with zinc-rich paint. Cost included in Bearing item.
3. The Contractor shall adjust longitudinal reinforcement in pier cap to ensure anchor rods and reinforcement do not conflict. Cost included in the Bearing item.
4. Anchor rods shall be placed prior to installing girder end diaphragms.

BEARING DESIGN CRITERIA		
LOADS	ABUTMENTS	PIERS
Unfactored Dead Load (Max.)	30k	80k
Unfactored Live Load (Max.)	75k	130k
DESIGN METHOD A		

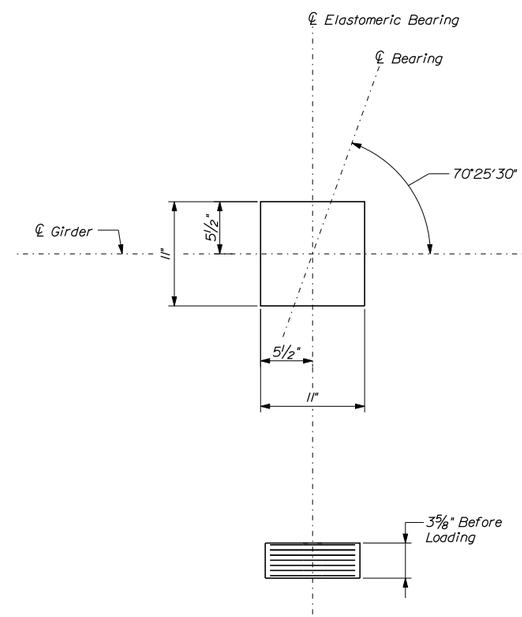

ELASTOMERIC BEARING

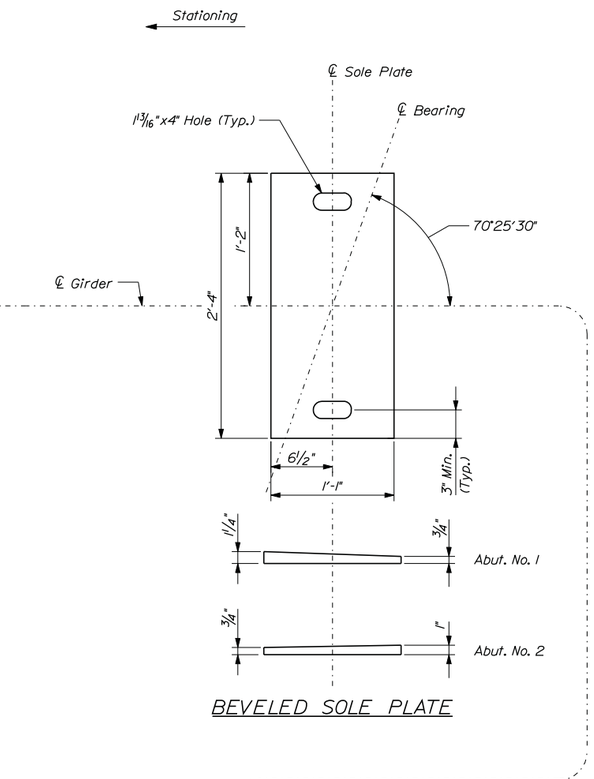

BEVELED SOLE PLATE

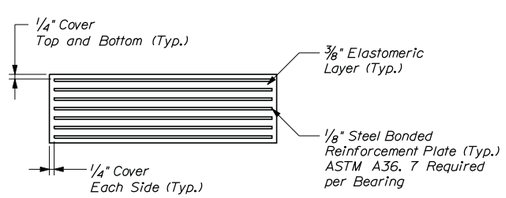

ELASTOMERIC BEARING DETAIL
Not to Scale

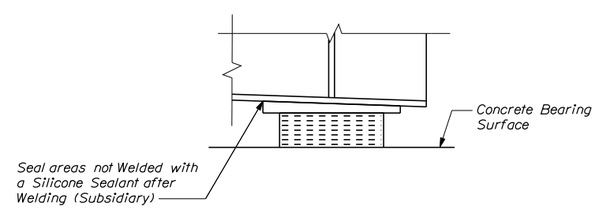

SECTION A-A

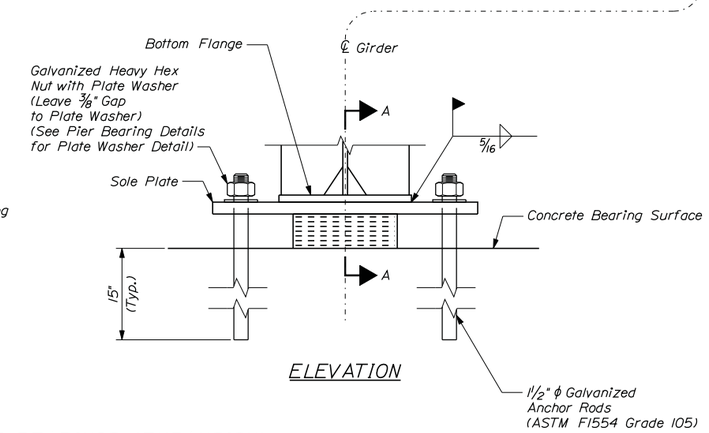

ELEVATION

ABUTMENT BEARINGS (EXPANSION)

Date:12/12/2014

Filename: ...\st\planset\046_bearing_01.dgn

Scale: 1½" = 1'-0"

No.	Revision	By	Date

Designed by:

VHB Vanasse Hangen Brustlin, Inc.

CONSULTANT PROJECT MANAGER: T. Bryant

	By	Date		By	Date
Designed	GME	12/14	Checked	LSC	12/14
Drawn	CMD	12/14	In Charge of	TSB	12/14

VANASSE HANGEN BRUSTLIN, INC.
500 Southborough Dr.
Suite 105B
South Portland, ME 04106
TEL (207) 889-3150
FAX (207) 253-5596

MAINE TURNPIKE

THE GOLD STAR MEMORIAL HIGHWAY

MTA PROJECT MANAGER: Ralph Norwood

SUPERSTRUCTURE REPLACEMENT
LUNT'S HILL ROAD UNDERPASS

ABUTMENT BEARING DETAILS

VHB: 55041.00
CONTRACT: 2015.10

SHEET NUMBER: 46

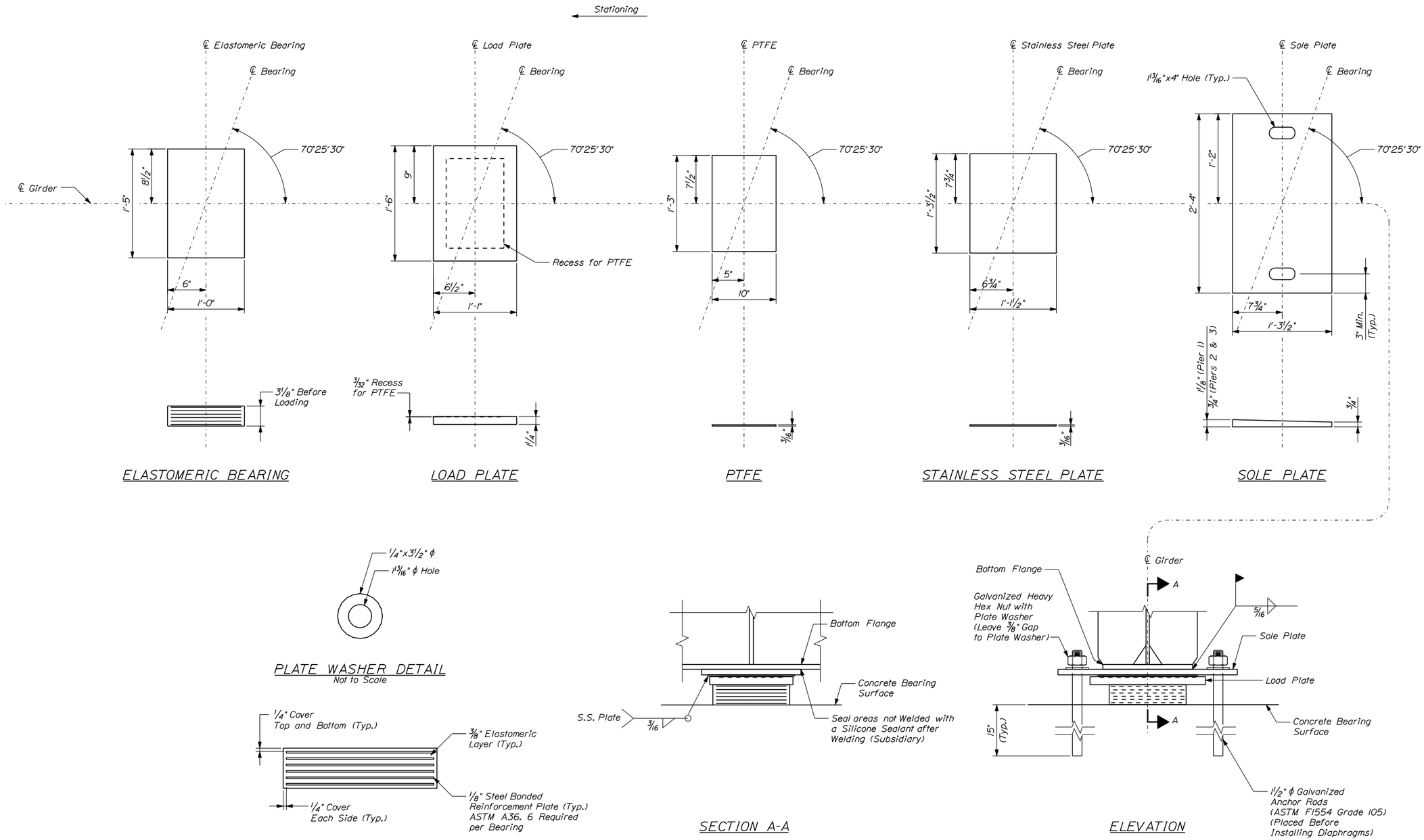

SHEET NOTE

1. See Elastomeric Bearing and Anchor Rod Notes on Abutment Bearing Details Sheet.

Scale: 1½" = 1'-0"

No.	Revision	By	Date

Designed by:

Vanasse Hangen Brustlin, Inc.

CONSULTANT PROJECT MANAGER: T. Bryant

	By	Date		By	Date
Designed	GME	12/14	Checked	LSC	12/14
Drawn	CMD	12/14	In Charge of	TSB	12/14

VANASSE HANGEN BRUSTLIN, INC.
500 Southborough Dr.
Suite 105B
South Portland, ME 04106
TEL (207) 889-3150
FAX (207) 253-5596

MAINE TURNPIKE

THE GOLD STAR MEMORIAL HIGHWAY

MTA PROJECT MANAGER: Ralph Norwood

SUPERSTRUCTURE REPLACEMENT
LUNT'S HILL ROAD UNDERPASS

PIER
BEARING DETAILS

VHB: 55041.00
CONTRACT: 2015.10

SHEET NUMBER: 47

Date: 12/12/2014

Filename: ...\st\planset\047_bearing_02.dgn

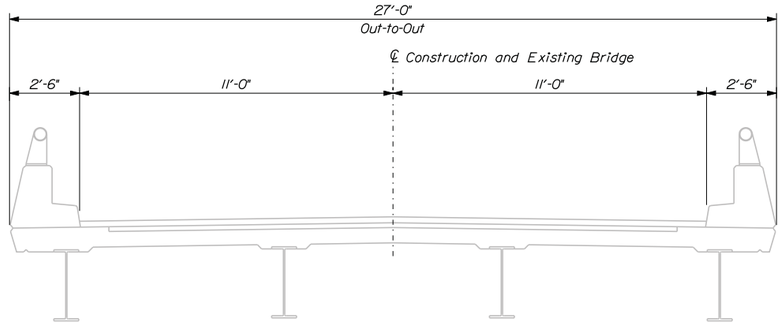

EXISTING SUPERSTRUCTURE SECTION

Scale: 3/8" = 1'-0"

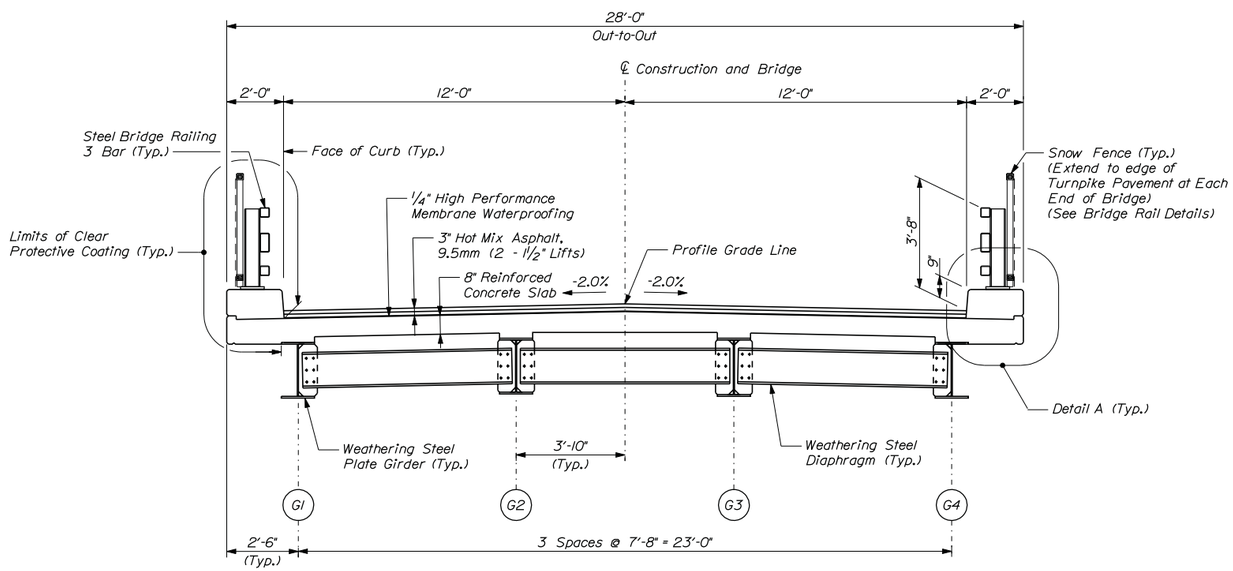

PROPOSED SUPERSTRUCTURE SECTION

(Looking Upstation)
Scale: 3/8" = 1'-0"

SUPERSTRUCTURE NOTES

1. All bridge curb concrete, including inside faces, top and outside faces, approach curb and deck fascia shall have a rubbed finish prior to the application of the Clear Protective Coating for Concrete Surface.
2. The concrete deck shall be given a smooth ordinary finish.
3. Prior to installing the proposed shear studs the Contractor shall clean the girder top flange so that it is free of debris, rust, scale, oil and other contaminates that would adversely affect the welding operation. All the grinding shall be performed in the longitudinal direction of the beam. Payment for preparing girder top flange for installation of proposed shear studs shall be incidental to Item 505.09.
4. Protective shielding shall be required per Special Provision Section 524.
5. The theoretical blocking used for design of the structure is 3 1/2" inches at the centerline of bearing at the abutments and piers.
6. Reinforcing steel shall have a minimum concrete cover of 2 inches unless otherwise noted.
7. Form a one inch V-groove on the fascias at the horizontal joint between the curb and slab.
8. The superstructure slab concrete shall be placed in one continuous operation and the concrete shall be kept plastic one complete span behind the span being placed.
9. At the Contractor's option, Precast Deck Panels may be used in place of the full depth cast-in-place deck slab, in accordance with Special Provisions Section 535, and in accordance with Standard Details, 502(07) - 502(12A).
10. See Framing Plan and Girder Elevation sheet for Structural Steel notes.
11. Install 1" diameter PVC deck drains per Standard Detail 502(03) and Special Provision Section 502.17 as required and as directed by the Resident. Drains shall extend 1'-0" below bottom flange.

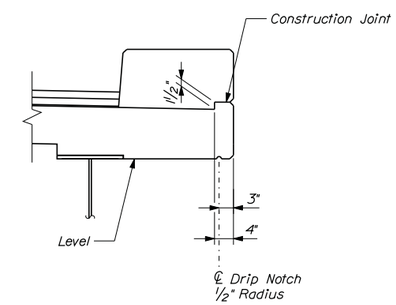

DETAIL A

Scale: 3/4" = 1'-0"

Date:12/12/2014

Filename: ...\planset\048_bridgetyp_01.dgn

Scale: AS NOTED

No.	Revision	By	Date

Designed by:

Vanasse Hangen Brustlin, Inc.

CONSULTANT PROJECT MANAGER: T. Bryant

	By	Date		By	Date
Designed	GME	12/14	Checked	LSC	12/14
Drawn	CMD	12/14	In Charge of	TSB	12/14

VANASSE HANGEN BRUSTLIN, INC.
500 Southborough Dr.
Suite 105B
South Portland, ME 04106
TEL (207) 889-3150
FAX (207) 253-5596

MAINE TURNPIKE

THE GOLD STAR MEMORIAL HIGHWAY

MTA PROJECT MANAGER: Ralph Norwood

SUPERSTRUCTURE REPLACEMENT
LUNT'S HILL ROAD UNDERPASS

SUPERSTRUCTURE SECTION

VHB: 55041.00

CONTRACT: 2015.10

SHEET NUMBER: 48

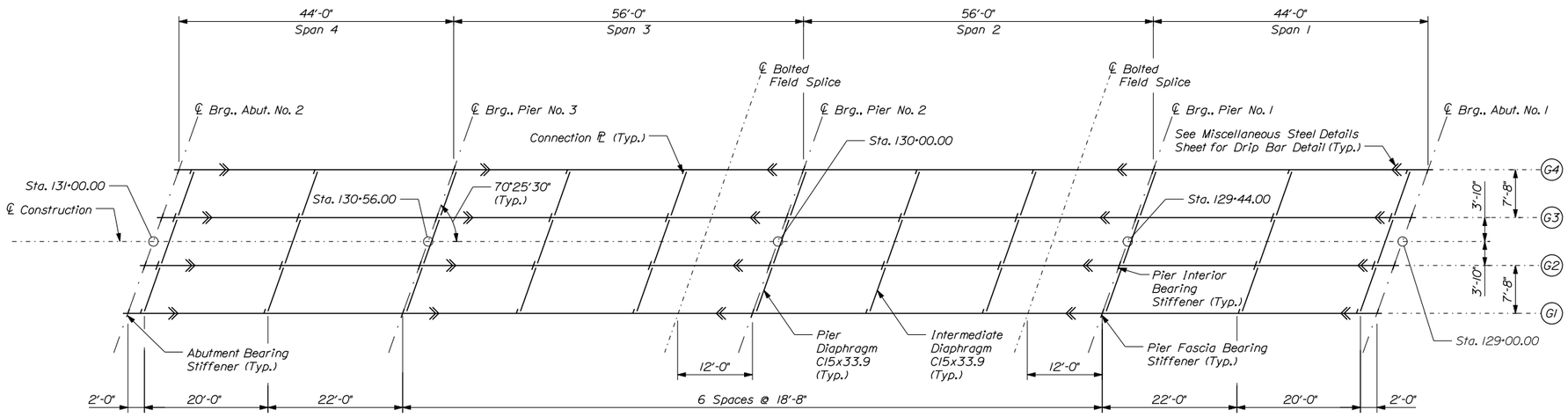

FRAMING PLAN

Scale: 3/32" = 1'-0"

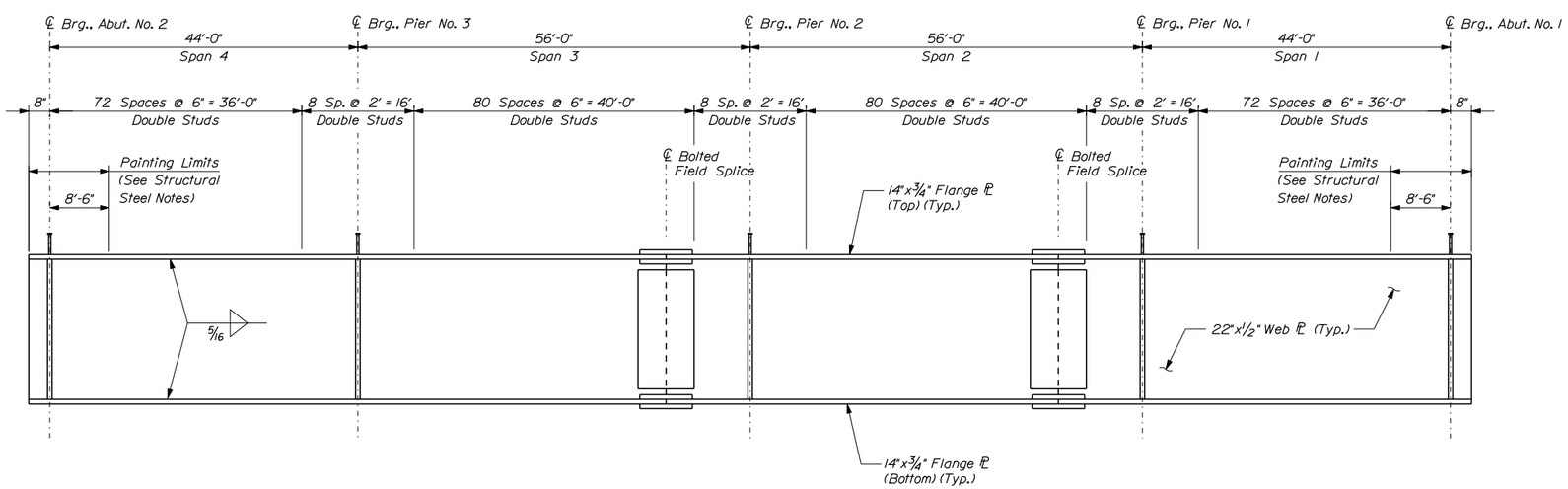

GIRDER ELEVATION AND STUD LAYOUT

(Connection Plates and Drip Bars not Shown)
658 Shear Studs per Girder
(2632 Shear Studs Total)
Not to Scale

STRUCTURAL STEEL NOTES

1. No transverse butt weld splices will be allowed in the flange plates or web plates within 10 feet or 10 percent of the span length (whichever is greater) from the points of maximum negative moment or maximum positive moment. Butt weld splices in flanges shall be not less than 18 inches from transverse butt welds in the web plates and no transverse web or flange butt welds shall be located within 18 inches of other transverse welds (e.g. connection plates to web welds) on either flange or web. No transverse butt weld splices will be allowed in areas of stress reversal.
2. Bearing stiffeners and girder ends shall be plumb after erection and dead loading of the structure. Intermediate web stiffeners may be either plumb or normal to the top flange. Girder webs may be plumb in the no-load condition or full dead load condition for erection purposes.
3. Diaphragm connection plates may be either plumb or normal to the top flange.
4. All bolts shall be 7/8" diameter ASTM A325 Type 3 high strength bolts. Holes shall be 15/16" unless otherwise noted. Bolts shall be installed with heads down at all bottom flange connections and heads up at all top flange connections. In painted areas, bolts shall be Type 1 galvanized.
5. Shear studs shall extend a minimum of 2" into the slab. See Shear Connector Detail on Miscellaneous Steel Details Sheet.
6. Prior to erection of structural steel the Contractor shall submit a detailed erection plan for approval.
7. Bearing stiffeners shall be mill-to-bear on the bottom flange and tight fit to the top flange. Bearing stiffeners used as connection plates shall be detailed as connection plates.
8. All faying surfaces, with the exception of field splices, shall be painted or sealed in accordance with FHWA Technical Advisory T5140.22, Section 4.c.2.c to prevent the formation of pack rust.
9. All plan dimensions provided are horizontal at 45 degrees F without accounting for profile grade, unless otherwise noted.
10. Bolted field splice locations may be mirrored at centerline bearing Pier No. 2.
11. Bearing anchor rods shall be placed prior to installing girder end diaphragms.
12. All structural steel, including connection plates, diaphragms, bearing load plates, sole plates, and curtain wall blockout plates shall be painted within 8'-6" of the center line of bearing at both abutments. All new painted surfaces where the existing protective coating has been removed or damaged due to construction activities shall be touched-up with an approved paint system recommended by the manufacturer of the paint system being repaired, as noted in Special Provision Section 506.

Date:12/12/2014

Filename: ...\st\planset\049_frame_01.dgn

Scale: AS NOTED

No.	Revision	By	Date

Designed by:

VHB Vanasse Hangen Brustlin, Inc.

CONSULTANT PROJECT MANAGER: T. Bryant

	By	Date		By	Date
Designed	GME	12/14	Checked	LSC	12/14
Drawn	CMD	12/14	In Charge of	TSB	12/14

VANASSE HANGEN BRUSTLIN, INC.
500 Southborough Dr.
Suite 105B
South Portland, ME 04106
TEL (207) 889-3150
FAX (207) 253-5596

MAINE TURNPIKE

THE GOLD STAR MEMORIAL HIGHWAY

MTA PROJECT MANAGER: Ralph Norwood

SUPERSTRUCTURE REPLACEMENT
LUNT'S HILL ROAD UNDERPASS

FRAMING PLAN
AND GIRDER ELEVATION

VHB: 55041.00 SHEET NUMBER: 49

CONTRACT: 2015.10

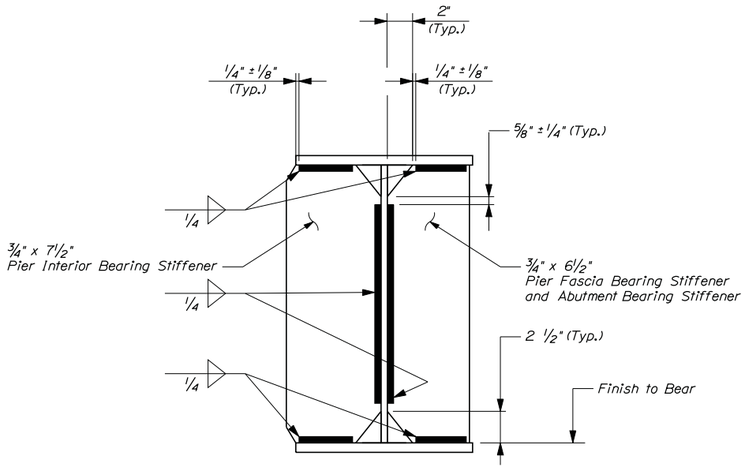

BEARING STIFFENER
Scale: 2" = 1'-0"

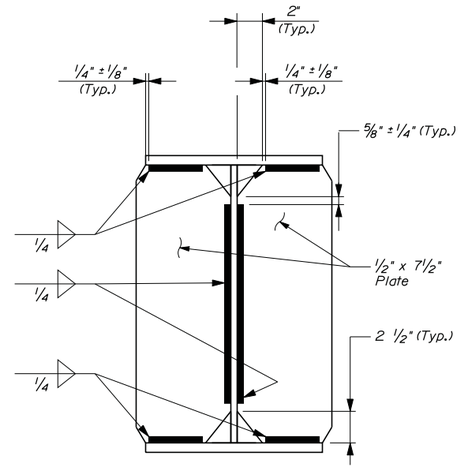

CONNECTION PLATE
(Interior Girder Shown)
Scale: 2" = 1'-0"

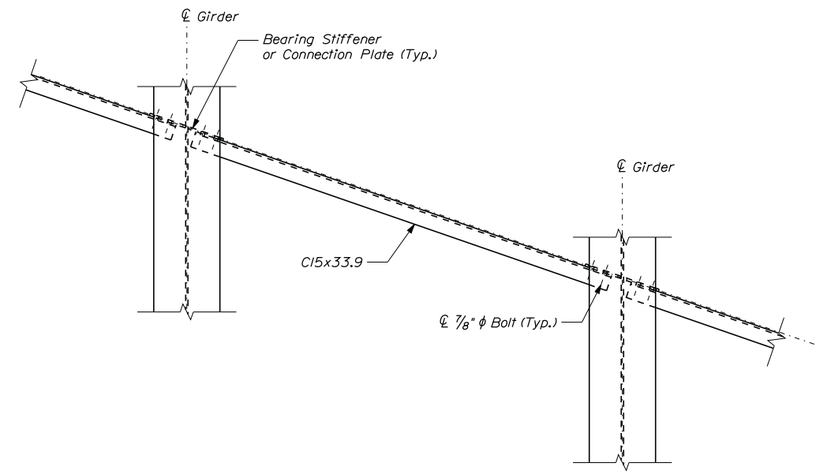

PLAN

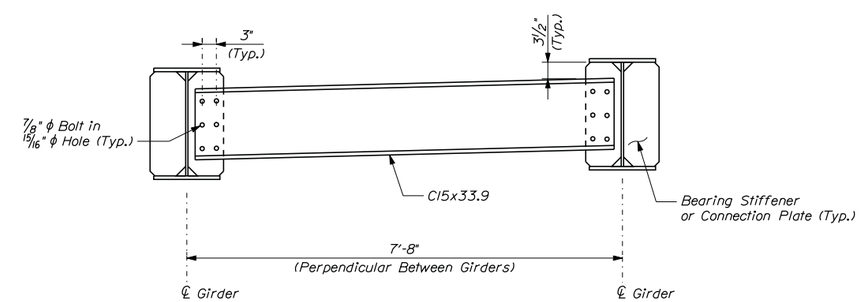

ELEVATION

PIER AND INTERMEDIATE DIAPHRAGM
(Typical all Bays)

Date:12/12/2014

Filename: ...\planset\050_diaphragm_01.dgn

Scale: NOT TO SCALE

No.	Revision	By	Date

Designed by:

Vanasse Hangen Brustlin, Inc.

CONSULTANT PROJECT MANAGER: T. Bryant

	By	Date		By	Date
Designed	GME	12/14	Checked	LSC	12/14
Drawn	CMD	12/14	In Charge of	TSB	12/14

VANASSE HANGEN BRUSTLIN, INC.
500 Southborough Dr.
Suite 105B
South Portland, ME 04106
TEL (207) 889-3150
FAX (207) 253-5596

MAINE TURNPIKE

THE GOLD STAR MEMORIAL HIGHWAY

MTA PROJECT MANAGER: Ralph Norwood

SUPERSTRUCTURE REPLACEMENT
LUNT'S HILL ROAD UNDERPASS

DIAPHRAGM DETAILS

VHB: 55041.00
CONTRACT: 2015.10

SHEET NUMBER: 50

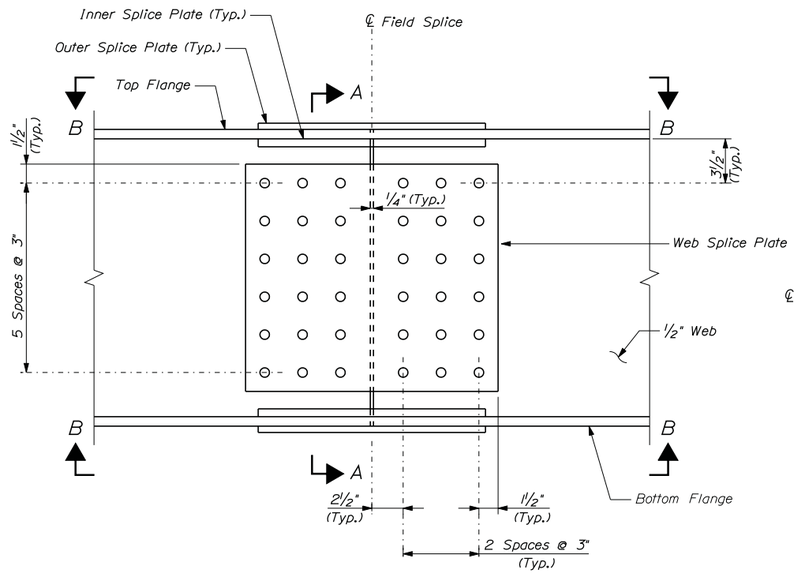

BOLTED FIELD SPLICE ELEVATION
Scale: 2" = 1'-0"

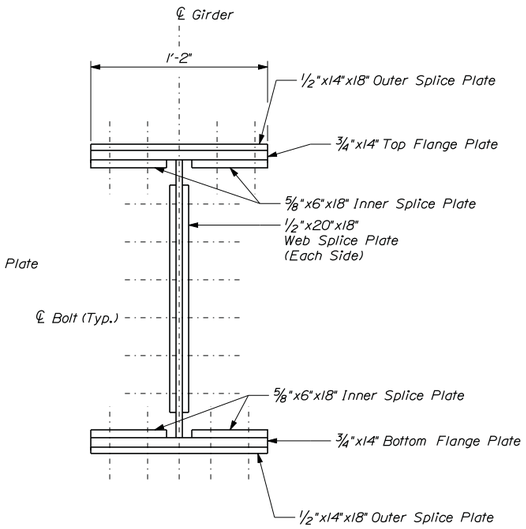

SECTION A-A
Scale: 2" = 1'-0"

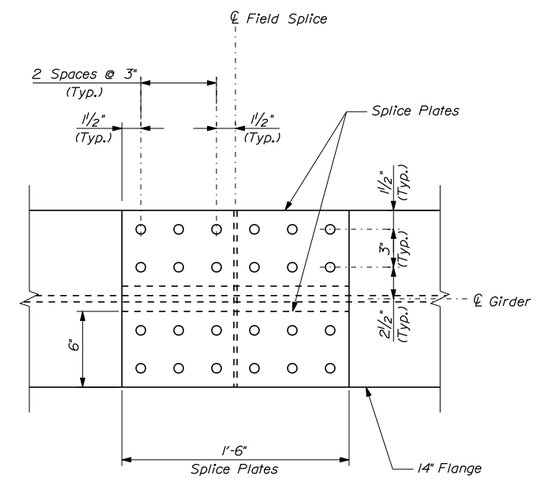

VIEW B-B
Scale: 2" = 1'-0"

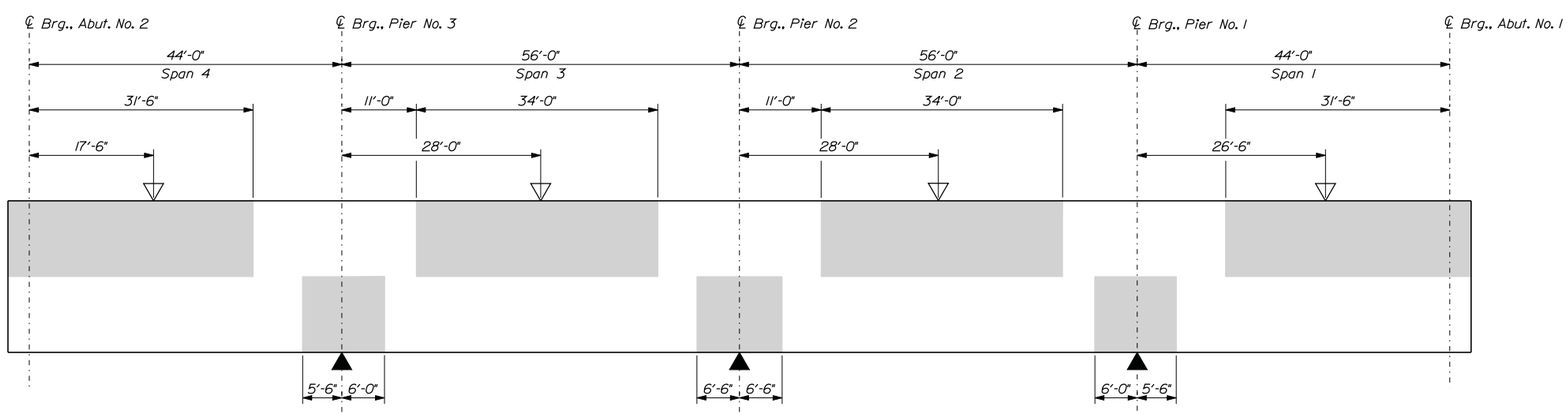

SCHEMATIC
GIRDER STRESS DIAGRAM
Not to Scale

KEY:

Indicates Areas Always in Compression. All Other Areas are in Tension or have Stress Reversals.

▽ Point of Maximum Positive Moment

▲ Point of Maximum Negative Moment

Scale: AS NOTED

No.	Revision	By	Date

Designed by:

Vanasse Hangen Brustlin, Inc.

CONSULTANT PROJECT MANAGER: T. Bryant

	By	Date		By	Date
Designed	GME	12/14	Checked	LSC	12/14
Drawn	CMD	12/14	In Charge of	TSB	12/14

VANASSE HANGEN BRUSTLIN, INC.
500 Southborough Dr.
Suite 105B
South Portland, ME 04106
TEL (207) 889-3150
FAX (207) 253-5596

MAINE TURNPIKE

THE GOLD STAR MEMORIAL HIGHWAY

MTA PROJECT MANAGER: Ralph Norwood

SUPERSTRUCTURE REPLACEMENT
LUNT'S HILL ROAD UNDERPASS

FIELD SPLICE AND STRESS DIAGRAM

VHB: 55041.00
CONTRACT: 2015.10

SHEET NUMBER: 51

Date: 12/12/2014
Filename: ...\cad\st\planset\051_beam_01.dgn

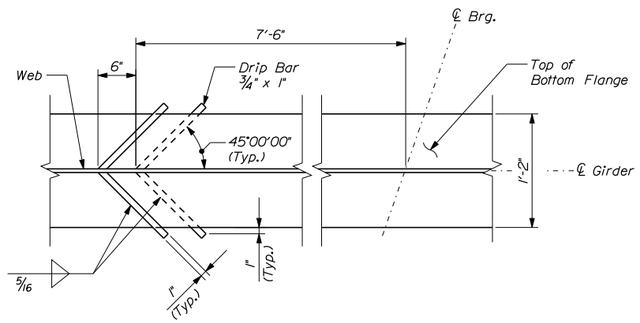

DRIP BAR DETAIL
(See Framing Plan for Locations)
Not to Scale

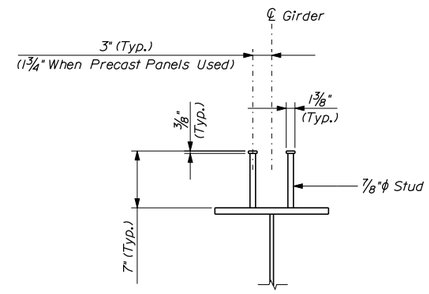

SHEAR
CONNECTOR DETAIL
Not to Scale

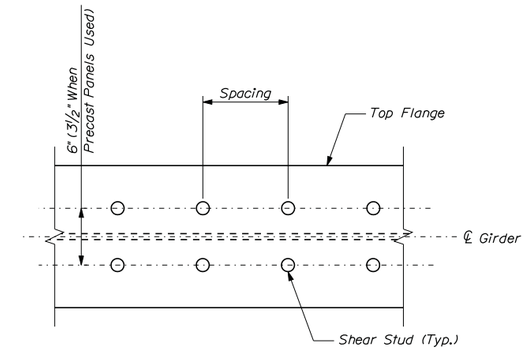

SHEAR CONNECTOR LAYOUT
(Adjust Shear Connector Spacing as Required Around Splice Plate Bolts)
Not to Scale

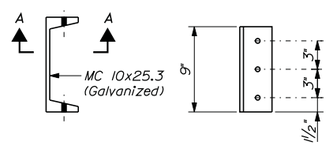

SIGN SUPPORT
(4 Required)

SECTION A-A

OVERPASS MOUNTED STREET
SIGN SUPPORT DETAILS
Scale: 1 1/2" = 1'-0"

OVERPASS MOUNTED STREET
SIGN SUPPORT NOTES

1. One overpass mounted street sign shall be placed on each bridge fascia. Location of Street Sign Support shall be field located by the Resident.
2. Bolts shall be 1/2" diameter A325 Type I galvanized.
3. Sign Brackets shall be located within two feet of sign ends. Bracket spacing shall be 5' on center maximum.
4. Street Signs shall be provided by the Authority.
5. Installation of the Overpass Mounted Street Sign and Supports will not be measured for payment and will be considered incidental to Item 504.71.

Date:12/12/2014

Filename: ...\cad\st\planset\052_beam_02.dgn

Scale: AS NOTED

No.	Revision	By	Date

Designed by:

Vanasse Hangen Brustlin, Inc.

CONSULTANT PROJECT MANAGER: T. Bryant

	By	Date		By	Date
Designed	GME	12/14	Checked	LSC	12/14
Drawn	CMD	12/14	In Charge of	TSB	12/14

VANASSE HANGEN BRUSTLIN, INC.
500 Southborough Dr.
Suite 105B
South Portland, ME 04106
TEL (207) 889-3150
FAX (207) 253-5596

MAINE TURNPIKE

THE GOLD STAR
MEMORIAL HIGHWAY

MTA PROJECT MANAGER: Ralph Norwood

SUPERSTRUCTURE REPLACEMENT
LUNT'S HILL ROAD UNDERPASS

MISCELLANEOUS STEEL DETAILS

VHB: 55041.00
CONTRACT: 2015.10

SHEET NUMBER: 52

TABLE OF DEFLECTIONS (in)

Girder	Load	Span No. 4										
		10/10	9/10	8/10	7/10	6/10	5/10	4/10	3/10	2/10	1/10	0/10
All Girders	Steel Dead Load	0.00	-0.02	-0.03	-0.04	-0.04	-0.04	-0.03	-0.02	-0.01	0.00	0.00
	Fluid Dead Load	0.00	-0.11	-0.20	-0.27	-0.29	-0.28	-0.23	-0.16	-0.09	-0.02	0.00
	Superimposed Dead Load	0.00	-0.03	-0.06	-0.07	-0.08	-0.08	-0.07	-0.05	-0.03	-0.01	0.00
	Sum	0.00	-0.16	-0.29	-0.38	-0.42	-0.40	-0.34	-0.24	-0.13	-0.03	0.00
Girder	Load	Span No. 3										
		10/10	9/10	8/10	7/10	6/10	5/10	4/10	3/10	2/10	1/10	0/10
All Girders	Steel Dead Load	0.00	-0.01	-0.03	-0.04	-0.06	-0.06	-0.06	-0.04	-0.02	-0.01	0.00
	Fluid Dead Load	0.00	-0.06	-0.18	-0.29	-0.38	-0.41	-0.37	-0.28	-0.16	-0.05	0.00
	Superimposed Dead Load	0.00	-0.03	-0.07	-0.11	-0.14	-0.15	-0.13	-0.11	-0.07	-0.02	0.00
	Sum	0.00	-0.10	-0.27	-0.45	-0.57	-0.61	-0.56	-0.43	-0.25	-0.08	0.00
Girder	Load	Span No. 2										
		10/10	9/10	8/10	7/10	6/10	5/10	4/10	3/10	2/10	1/10	0/10
All Girders	Steel Dead Load	0.00	-0.01	-0.02	-0.04	-0.06	-0.06	-0.06	-0.04	-0.03	-0.01	0.00
	Fluid Dead Load	0.00	-0.05	-0.16	-0.28	-0.37	-0.41	-0.38	-0.29	-0.18	-0.06	0.00
	Superimposed Dead Load	0.00	-0.02	-0.07	-0.11	-0.13	-0.15	-0.14	-0.11	-0.07	-0.03	0.00
	Sum	0.00	-0.08	-0.25	-0.43	-0.56	-0.61	-0.57	-0.45	-0.27	-0.10	0.00
Girder	Load	Span No. 1										
		10/10	9/10	8/10	7/10	6/10	5/10	4/10	3/10	2/10	1/10	0/10
All Girders	Steel Dead Load	0.00	0.00	-0.01	-0.02	-0.03	-0.04	-0.04	-0.04	-0.03	-0.02	0.00
	Fluid Dead Load	0.00	-0.02	-0.09	-0.16	-0.23	-0.28	-0.29	-0.27	-0.20	-0.11	0.00
	Superimposed Dead Load	0.00	-0.01	-0.03	-0.05	-0.07	-0.08	-0.08	-0.07	-0.06	-0.03	0.00
	Sum	0.00	-0.03	-0.13	-0.24	-0.34	-0.40	-0.42	-0.38	-0.29	-0.16	0.00

BOTTOM OF SLAB ELEVATIONS @ 10TH POINTS

Girder	℄ Brg., Abut. No. 2	4.90	4.80	4.70	4.60	4.50	4.40	4.30	4.20	4.10	℄ Brg., Pier No. 3
Span No. 4											
1	179.95	180.03	180.10	180.18	180.24	180.31	180.37	180.43	180.48	180.53	180.58
2	180.15	180.22	180.30	180.37	180.44	180.51	180.57	180.62	180.67	180.72	180.76
3	180.19	180.26	180.34	180.41	180.48	180.55	180.61	180.66	180.70	180.74	180.78
4	180.07	180.15	180.23	180.30	180.37	180.43	180.49	180.54	180.58	180.62	180.66
Span No. 3											
Girder	℄ Brg., Pier No. 3	3.90	3.80	3.70	3.60	3.50	3.40	3.30	3.20	3.10	℄ Brg., Pier No. 2
1	180.58	180.64	180.70	180.75	180.79	180.82	180.82	180.82	180.80	180.77	180.73
2	180.76	180.82	180.87	180.92	180.95	180.97	180.97	180.96	180.94	180.91	180.87
3	180.78	180.84	180.89	180.93	180.96	180.98	180.97	180.96	180.93	180.89	180.86
4	180.66	180.71	180.75	180.79	180.82	180.83	180.82	180.80	180.77	180.73	180.68
Span No. 2											
Girder	℄ Brg., Pier No. 2	2.90	2.80	2.70	2.60	2.50	2.40	2.30	2.20	2.10	℄ Brg., Pier No. 1
1	180.73	180.71	180.68	180.64	180.59	180.53	180.45	180.36	180.25	180.14	180.02
2	180.87	180.84	180.81	180.77	180.72	180.65	180.57	180.47	180.36	180.24	180.12
3	180.86	180.82	180.79	180.74	180.68	180.61	180.52	180.42	180.31	180.18	180.06
4	180.68	180.64	180.60	180.55	180.49	180.41	180.32	180.22	180.10	179.97	179.84
Span No. 1											
Girder	℄ Brg., Pier No. 1	1.90	1.80	1.70	1.60	1.50	1.40	1.30	1.20	1.10	℄ Brg., Abut. No. 1
1	180.02	179.93	179.84	179.74	179.64	179.53	179.41	179.28	179.15	179.00	178.85
2	180.12	180.02	179.93	179.83	179.72	179.61	179.49	179.36	179.22	179.07	178.91
3	180.06	179.96	179.86	179.76	179.65	179.53	179.41	179.27	179.13	178.98	178.82
4	179.84	179.74	179.64	179.53	179.42	179.30	179.17	179.04	178.89	178.73	178.57

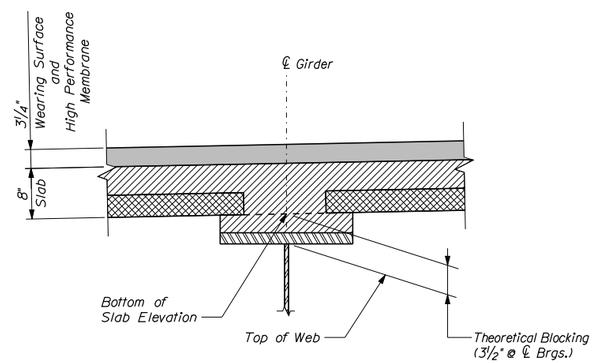

BLOCKING DETAIL
Not to Scale
(Deck Panel Option Shown)

Date:12/12/2014

Filename: ...\st\planset\053_table_01.dgn

Scale: AS NOTED

No.	Revision	By	Date

Designed by:

Vanasse Hangen Brustlin, Inc.

CONSULTANT PROJECT MANAGER: T. Bryant

	By	Date		By	Date
Designed	GME	12/14	Checked	LSC	12/14
Drawn	CMD	12/14	In Charge of	TSB	12/14

VANASSE HANGEN BRUSTLIN, INC.
500 Southborough Dr.
Suite 105B
South Portland, ME 04106
TEL (207) 889-3150
FAX (207) 253-5596

MAINE TURNPIKE

THE GOLD STAR MEMORIAL HIGHWAY

MTA PROJECT MANAGER: Ralph Norwood

SUPERSTRUCTURE REPLACEMENT
LUNT'S HILL ROAD UNDERPASS

TABLE OF DEFLECTIONS
AND BOTTOM OF SLAB ELEVATIONS

VHB: 55041.00 SHEET NUMBER: 53
CONTRACT: 2015.10

TABLE OF CAMBER ORDINATES PER SPAN ("COS") (in) @ 10TH POINTS

Girder	℄ Brg., Abut. No. 2	4.90	4.80	4.70	4.60	4.50	4.40	4.30	4.20	4.10	℄ Brg., Pier No. 3
Span No. 4											
1	0.00	0.19	0.35	0.48	0.55	0.57	0.55	0.50	0.36	0.18	0.00
2	0.00	0.22	0.41	0.56	0.65	0.69	0.69	0.60	0.43	0.22	0.00
3	0.00	0.23	0.44	0.60	0.71	0.77	0.78	0.67	0.48	0.24	0.00
4	0.00	0.24	0.46	0.64	0.77	0.85	0.82	0.69	0.49	0.24	0.00
Span No. 3											
Girder	℄ Brg., Pier No. 3	3.90	3.80	3.70	3.60	3.50	3.40	3.30	3.20	3.10	℄ Brg., Pier No. 2
1	0.00	0.58	1.14	1.59	1.88	1.98	1.87	1.58	1.13	0.57	0.00
2	0.00	0.57	1.11	1.55	1.83	1.92	1.82	1.53	1.09	0.55	0.00
3	0.00	0.57	1.11	1.55	1.83	1.92	1.82	1.53	1.09	0.55	0.00
4	0.00	0.58	1.14	1.59	1.88	1.98	1.87	1.58	1.13	0.57	0.00
Span No. 2											
Girder	℄ Brg., Pier No. 2	2.90	2.80	2.70	2.60	2.50	2.40	2.30	2.20	2.10	℄ Brg., Pier No. 1
1	0.00	0.53	1.05	1.48	1.77	1.87	1.78	1.51	1.09	0.56	0.00
2	0.00	0.55	1.09	1.53	1.82	1.92	1.83	1.55	1.11	0.57	0.00
3	0.00	0.55	1.09	1.53	1.82	1.92	1.83	1.55	1.11	0.57	0.00
4	0.00	0.53	1.05	1.48	1.77	1.87	1.78	1.51	1.09	0.56	0.00
Span No. 1											
Girder	℄ Brg., Pier No. 1	1.90	1.80	1.70	1.60	1.50	1.40	1.30	1.20	1.10	℄ Brg., Abut. No. 1
1	0.00	0.32	0.64	0.91	1.10	1.20	1.18	1.05	0.80	0.44	0.00
2	0.00	0.32	0.64	0.92	1.11	1.21	1.19	1.06	0.81	0.45	0.00
3	0.00	0.32	0.64	0.92	1.11	1.21	1.19	1.06	0.81	0.45	0.00
4	0.00	0.32	0.64	0.91	1.10	1.20	1.18	1.05	0.80	0.44	0.00

TABLE OF CAMBER DIMENSIONS (ft)

Girder	A2	P3	P2	P1	A1
1	1.10	1.73	1.89	1.17	0.00
2	1.24	1.85	1.96	1.21	0.00
3	1.37	1.97	2.04	1.24	0.00
4	1.51	2.09	2.11	1.27	0.00

CAMBER NOTES

1. Camber ordinates, as shown, are computed to compensate for all dead load deflections and for the curvature of the finished grade profile.
2. Dimensions shown do not account for shop fabrication temperature, or girder extensions beyond bearing at abutments.

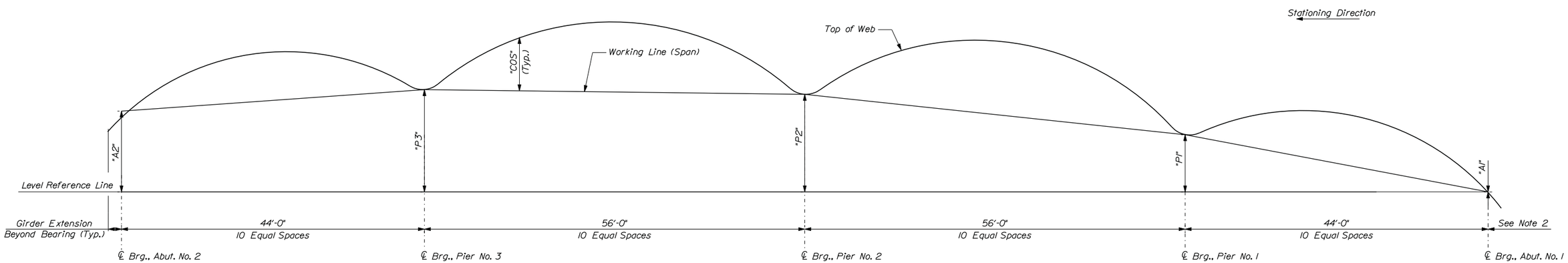

CAMBER DIAGRAM
Not to Scale

Date:12/12/2014

Filename: ...\st\planset\054_camber_01.dgn

Scale: AS NOTED

No.	Revision	By	Date

Designed by:

Vanasse Hangen Brustlin, Inc.

CONSULTANT PROJECT MANAGER: T. Bryant

	By	Date		By	Date
Designed	GME	12/14	Checked	LSC	12/14
Drawn	CMD	12/14	In Charge of	TSB	12/14

VANASSE HANGEN BRUSTLIN, INC.
500 Southborough Dr.
Suite 105B
South Portland, ME 04106
TEL (207) 889-3150
FAX (207) 253-5596

MAINE TURNPIKE

THE GOLD STAR MEMORIAL HIGHWAY

MTA PROJECT MANAGER: Ralph Norwood

SUPERSTRUCTURE REPLACEMENT
LUNT'S HILL ROAD UNDERPASS

CAMBER ORDINATES AND DIAGRAM

VHB: 55041.00
CONTRACT: 2015.10

SHEET NUMBER: 54

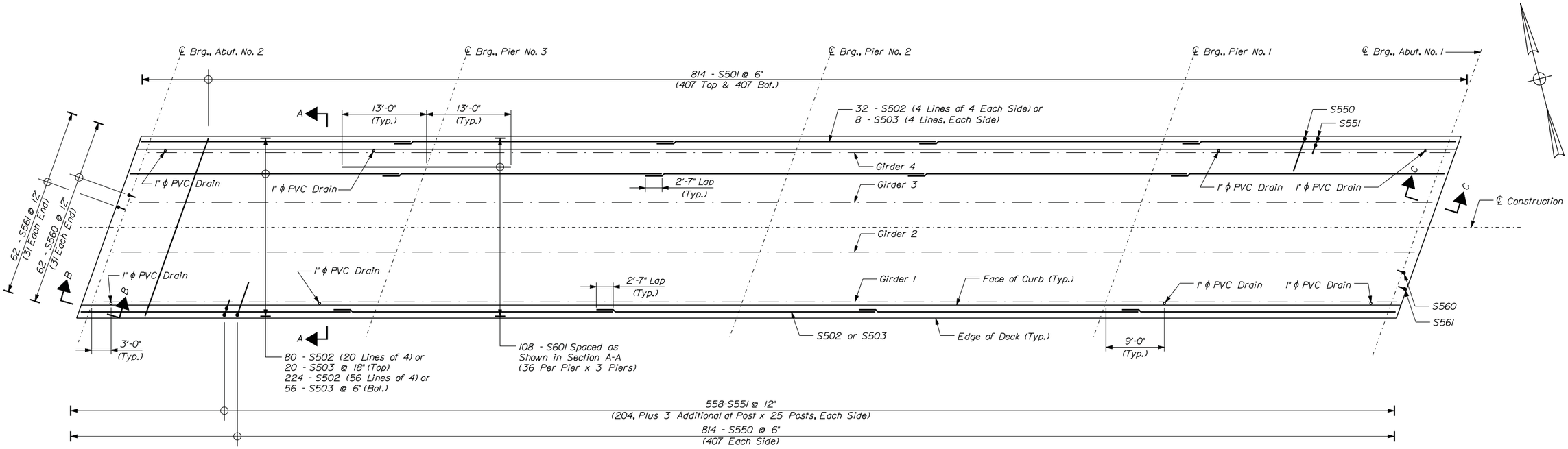

DECK REINFORCEMENT PLAN

(1" PVC Drains Enlarged for Clarity)
Scale: 1/8" = 1'-0"

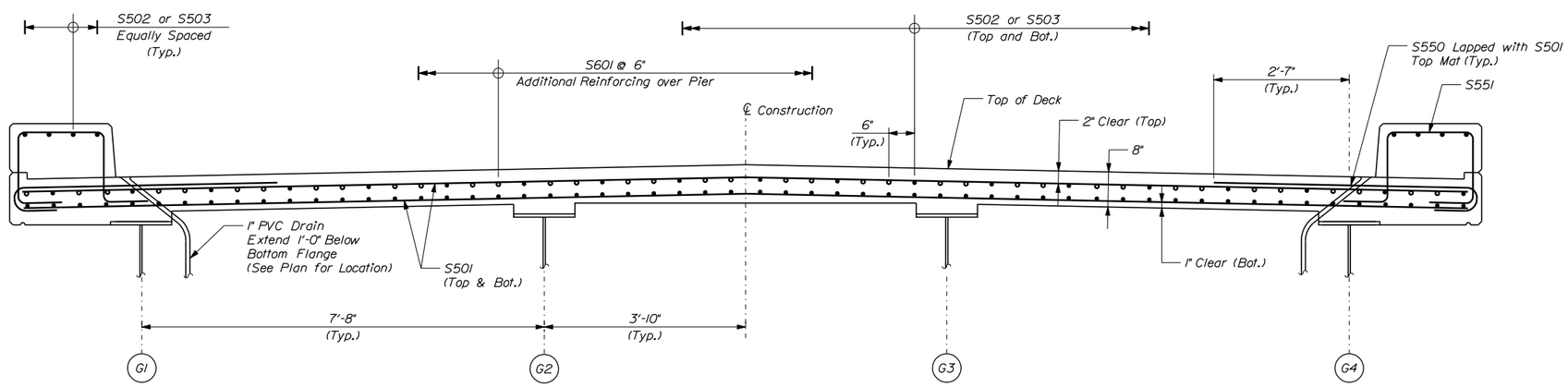

SECTION A-A

(Looking Up Station)
(Pavement not Shown)
Scale: 3/4" = 1'-0"

SHEET NOTES

1. See Deck Reinforcement (2 of 2) for Section B-B and Section C-C.
2. Alternate position of bars S502 and S503 such that longitudinal bar laps are staggered between adjacent lines of reinforcement.

REINFORCING KEY

N.F. = Near Face
F.F. = Far Face
E.F. = Each Face
▲ = Cut in Field

Date:12/12/2014

Filename: ...\st\plonset\055_deckrein_01.dgn

Scale: AS NOTED

No.	Revision	By	Date

Designed by:

Vanasse Hangen Brustlin, Inc.

CONSULTANT PROJECT MANAGER: T. Bryant

	By	Date		By	Date
Designed	GME	12/14	Checked	LSC	12/14
Drawn	CMD	12/14	In Charge of	TSB	12/14

VANASSE HANGEN BRUSTLIN, INC.
500 Southborough Dr.
Suite 105B
South Portland, ME 04106
TEL (207) 889-3150
FAX (207) 253-5596

MAINE TURNPIKE

THE GOLD STAR MEMORIAL HIGHWAY

MTA PROJECT MANAGER: Ralph Norwood

SUPERSTRUCTURE REPLACEMENT
LUNT'S HILL ROAD UNDERPASS

DECK REINFORCEMENT (1 OF 2)

VHB: 55041.00
CONTRACT: 2015.10

SHEET NUMBER: 55

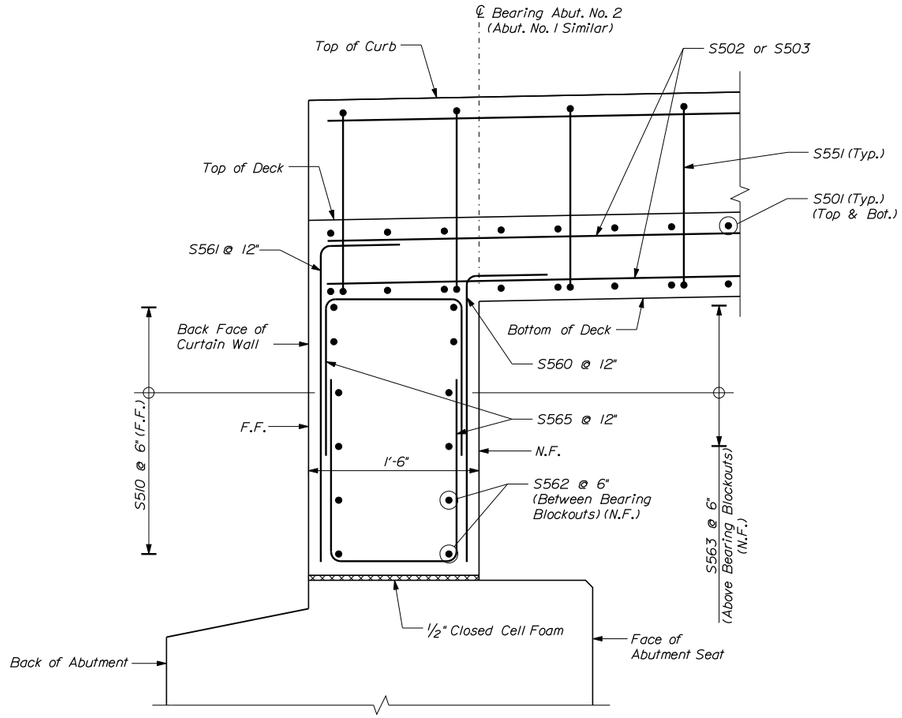

SECTION B-B
(Pavement not Shown)
Scale: 1 1/2" = 1'-0"

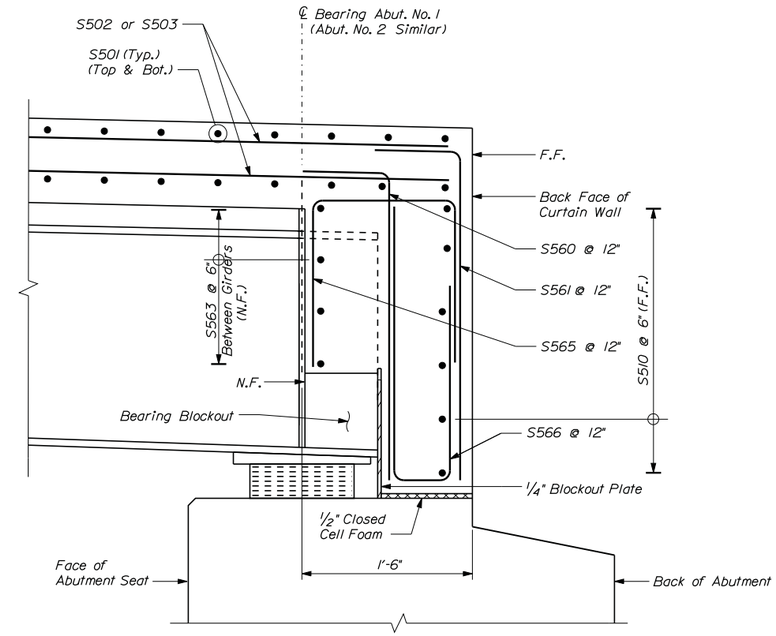

SECTION C-C
(Pavement not Shown)
Scale: 1 1/2" = 1'-0"

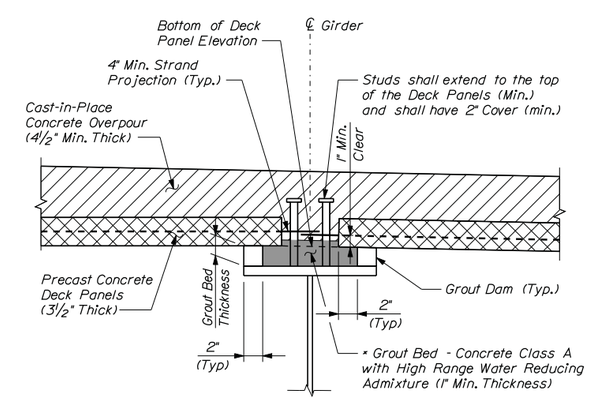

* Ensure Grout Flows Under Panel for Complete Bearing

PRECAST PANEL HAUNCH DETAIL
(Pavement Not Shown)
Scale: 1 1/2" = 1'-0"

SHEET NOTE

1. See Deck Reinforcement (1 of 2) for location of Section B-B and Section C-C.

REINFORCING KEY

N.F. = Near Face
F.F. = Far Face
E.F. = Each Face
▲ = Cut in Field

Date:12/12/2014

Filename: ...\st\planset\056_deckrein_02.dgn

Scale: AS NOTED

No.	Revision	By	Date

Designed by:

Vanasse Hangen Brustlin, Inc.

CONSULTANT PROJECT MANAGER: T. Bryant

	By	Date		By	Date
Designed	GME	12/14	Checked	LSC	12/14
Drawn	CMD	12/14	In Charge of	TSB	12/14

VANASSE HANGEN BRUSTLIN, INC.
500 Southborough Dr.
Suite 105B
South Portland, ME 04106
TEL (207) 889-3150
FAX (207) 253-5596

MAINE TURNPIKE

THE GOLD STAR MEMORIAL HIGHWAY

MTA PROJECT MANAGER: Ralph Norwood

SUPERSTRUCTURE REPLACEMENT
LUNT'S HILL ROAD UNDERPASS

DECK REINFORCEMENT (2 OF 2)

VHB: 55041.00
CONTRACT: 2015.10

SHEET NUMBER: 56

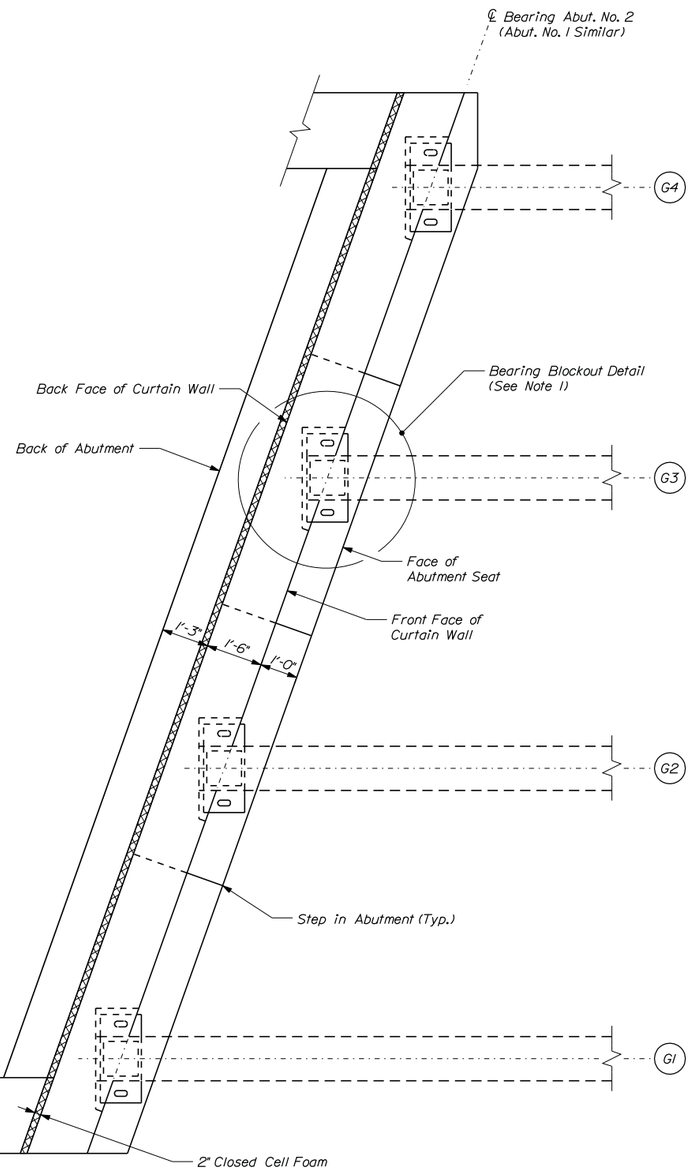

CURTAIN WALL LAYOUT

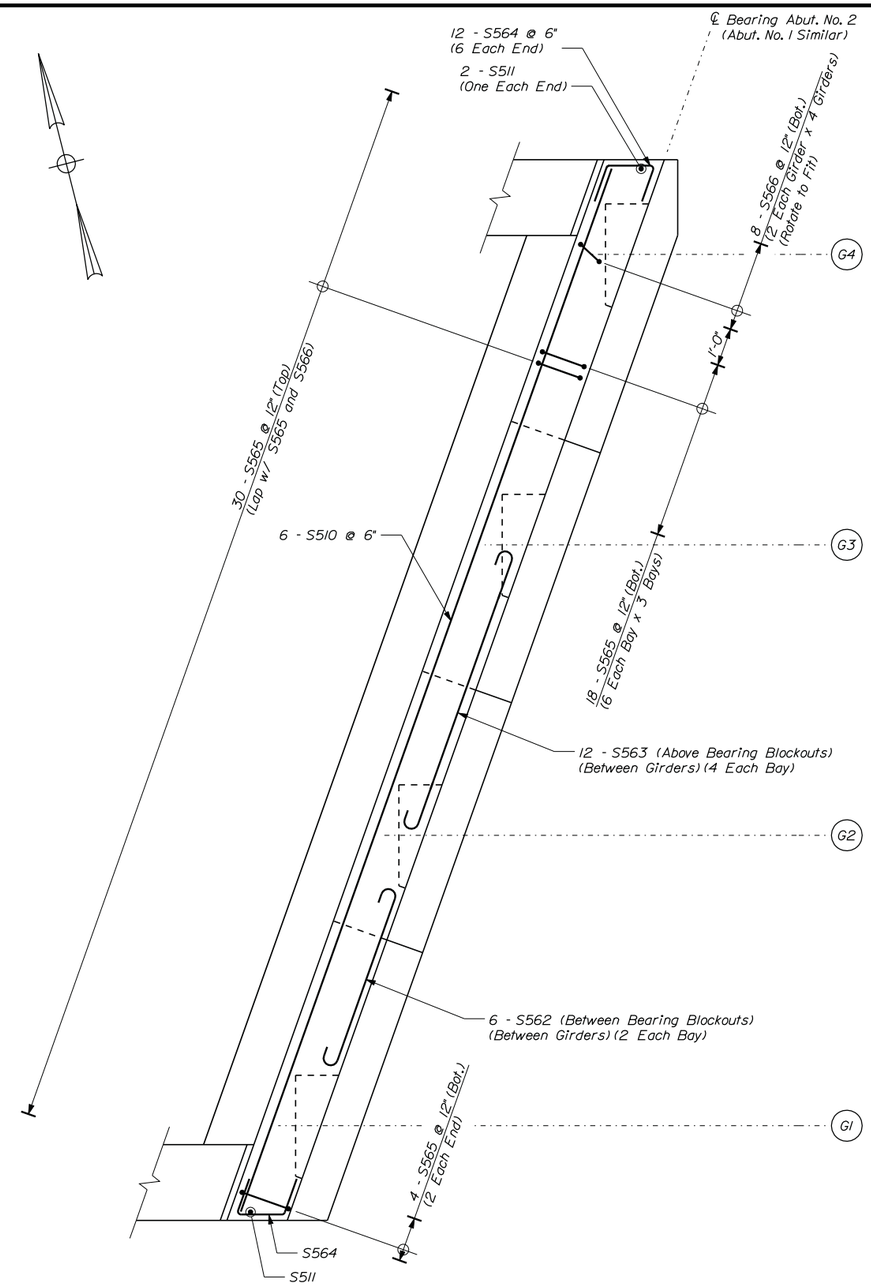

CURTAIN WALL REINFORCEMENT

SHEET NOTE

1. See Curtain Wall Details (2 of 2) for Bearing Blockout Detail.

REINFORCING KEY

N.F. = Near Face
F.F. = Far Face
E.F. = Each Face
▲ = Cut in Field

Date:12/12/2014

Filename: ...\st\planset\057_curtain_01.dgn

Scale: As Noted

No.	Revision	By	Date

Designed by:

Vanasse Hangen Brustlin, Inc.

CONSULTANT PROJECT MANAGER: T. Bryant

	By	Date		By	Date
Designed	GME	12/14	Checked	LSC	12/14
Drawn	CMD	12/14	In Charge of	TSB	12/14

VANASSE HANGEN BRUSTLIN, INC.
500 Southborough Dr.
Suite 105B
South Portland, ME 04106
TEL (207) 889-3150
FAX (207) 253-5596

MAINE TURNPIKE

THE GOLD STAR MEMORIAL HIGHWAY

MTA PROJECT MANAGER: Ralph Norwood

SUPERSTRUCTURE REPLACEMENT
LUNT'S HILL ROAD UNDERPASS

CURTAIN WALL DETAILS (1 OF 2)

VHB: 55041.00
CONTRACT: 2015.10

SHEET NUMBER: 57

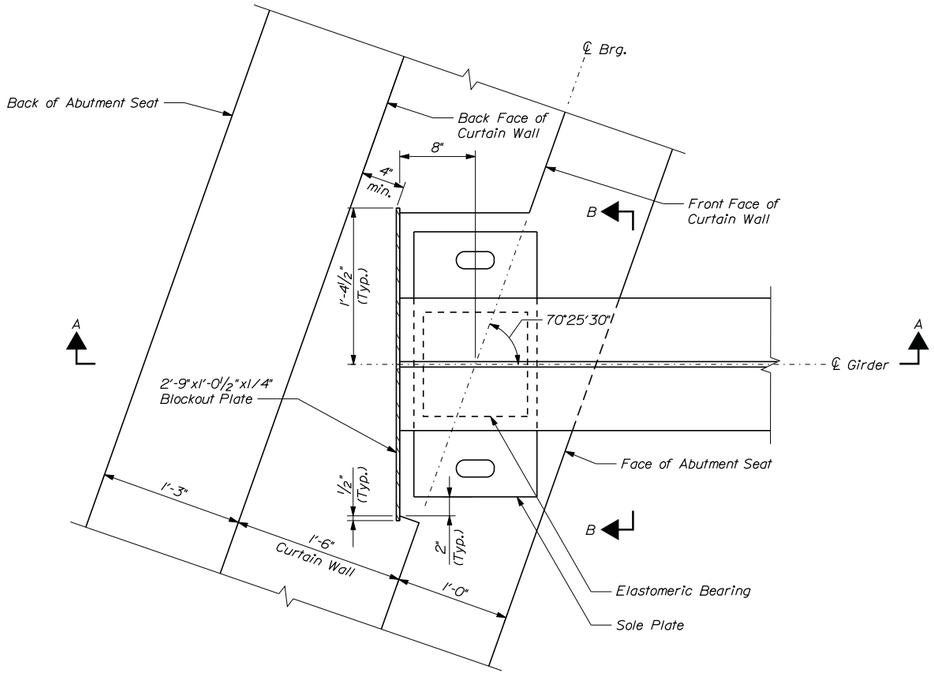

PLAN
(Anchor Bolts and Bearing Stiffeners Not Shown for Clarity)

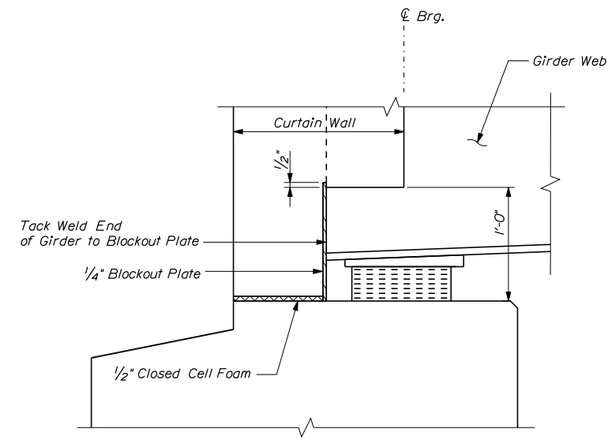

SECTION A-A

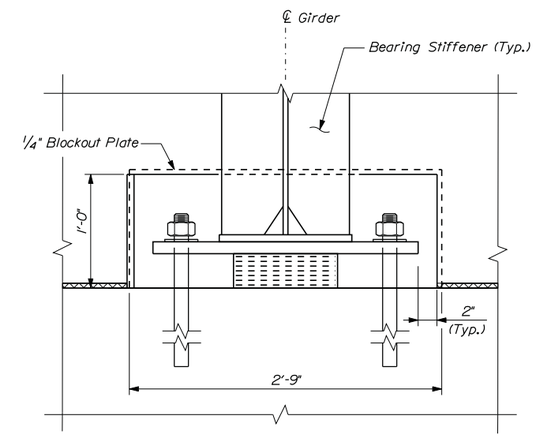

SECTION B-B

BEARING BLOCKOUT DETAILS

Date:12/12/2014

Filename: ...\st\planset\058_curtain_02.dgn

Scale: 1½" = 1'-0"

No.	Revision	By	Date

Designed by:

Vanasse Hangen Brustlin, Inc.

CONSULTANT PROJECT MANAGER: T. Bryant

	By	Date		By	Date
Designed	GME	12/14	Checked	LSC	12/14
Drawn	CMD	12/14	In Charge of	TSB	12/14

VANASSE HANGEN BRUSTLIN, INC.
500 Southborough Dr.
Suite 105B
South Portland, ME 04106
TEL (207) 889-3150
FAX (207) 253-5596

MAINE TURNPIKE

THE GOLD STAR MEMORIAL HIGHWAY

MTA PROJECT MANAGER: Ralph Norwood

SUPERSTRUCTURE REPLACEMENT
LUNT'S HILL ROAD UNDERPASS

CURTAIN WALL DETAILS (2 OF 2)

VHB: 55041.00
CONTRACT: 2015.10

SHEET NUMBER: 58

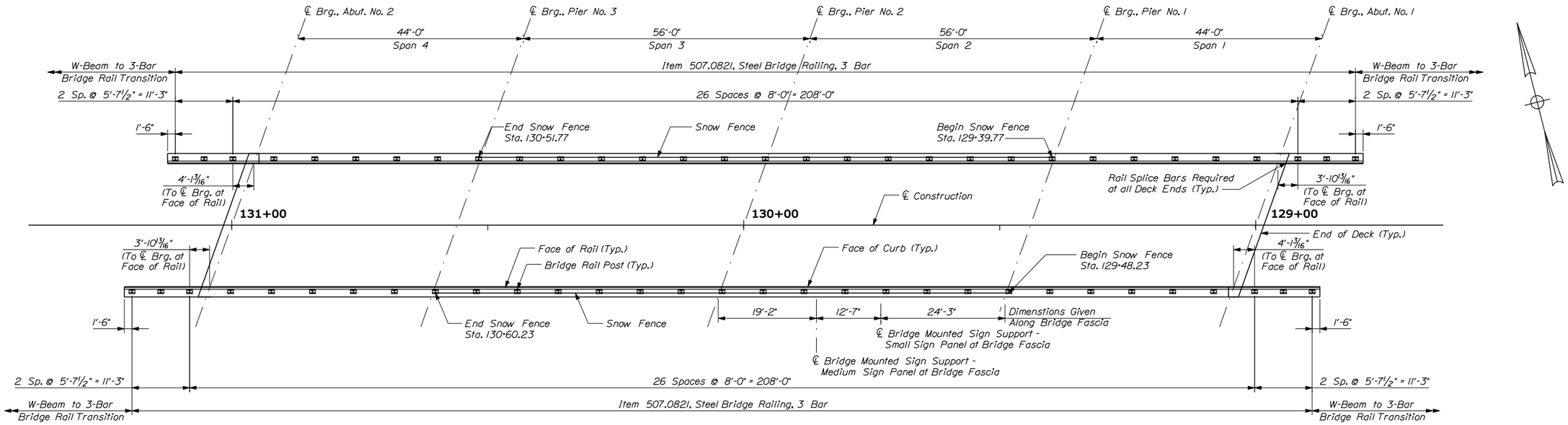

BRIDGE RAIL LAYOUT

(Dimensions Face of Rail)
Scale: 3/32" = 1'-0"

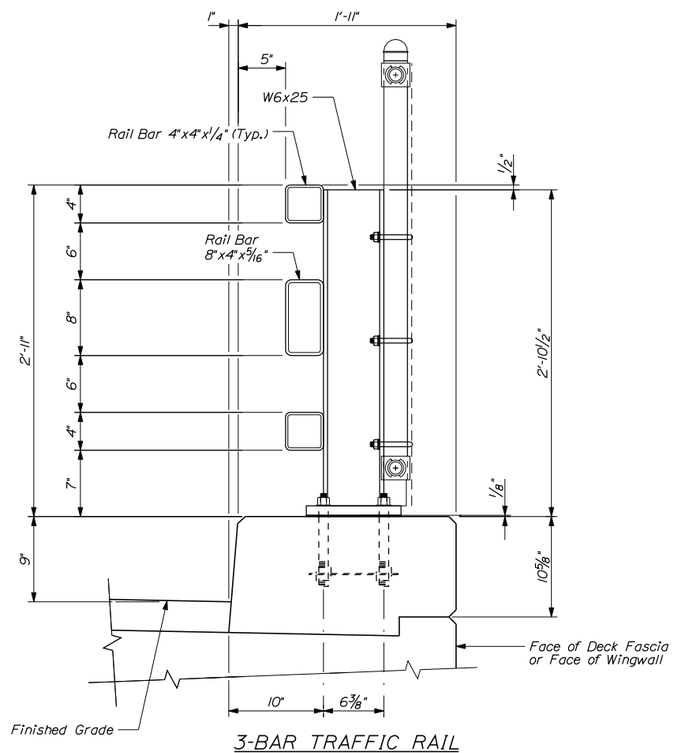

3-BAR TRAFFIC RAIL

Scale: 1½" = 1'-0"

BRIDGE RAIL MATERIAL NOTES:

1. Structural tubing shall conform to the requirements of ASTM A500, Grade B, Structural Tubing. Rail tubing shall meet the longitudinal charpy v-notch requirements of 15 ft. Lbs. At 0 degrees F. For ASTM A500, Grade B. The test samples shall be taken after forming the tubes.
2. Rail posts and base plates shall conform to the requirements of ASTM A572 Grade 50, except anchor plates may be ASTM A36.
3. Bolts and matching nuts for rail-to-post attachment shall conform to ASTM A307 or A449. All other bolts and nuts shall conform to ASTM 307 and ASTM 563 Grade A respectively or better, except ASTM A307 nuts may be used on the bottom of anchor assembly. Washers shall be hardened steel commercial Type A plain wide washers and shall meet dimensional requirements of A.N.S.I. B18.22. Anchor rods shall conform to ASTM A449.
4. All steel components (except stainless) shall be galvanized after fabrication in conformance to AASHTO M232 (ASTM A153) and AASHTO M111 (ASTM A123). The galvanizing kettle shall have 0.05 to 0.09 percent nickel. Galvanizing surfaces shall have a uniform appearance and galvanizing material shall be properly stored.
5. Preformed bearing pads (⅛" thick) shall conform to AASHTO M251.
6. See MaineDOT Standard Details of Steel Bridge Railing for notes and other information not shown.

Scale: AS NOTED

No.	Revision	By	Date

Designed by:

Vanasse Hangen Brustlin, Inc.

CONSULTANT PROJECT MANAGER: T. Bryant

	By	Date		By	Date
Designed	GME	12/14	Checked	LSC	12/14
Drawn	CMD	12/14	In Charge of	TSB	12/14

VANASSE HANGEN BRUSTLIN, INC.
500 Southborough Dr.
Suite 105B
South Portland, ME 04106
TEL (207) 889-3150
FAX (207) 253-5596

MAINE TURNPIKE

THE GOLD STAR MEMORIAL HIGHWAY

MTA PROJECT MANAGER: Ralph Norwood

SUPERSTRUCTURE REPLACEMENT
LUNT'S HILL ROAD UNDERPASS

BRIDGE RAIL DETAILS

VHB: 55041.00
CONTRACT: 2015.10

SHEET NUMBER: 59

Date: 12/12/2014
Filename: ...\cad\st\planset\059_rail_01.dgn

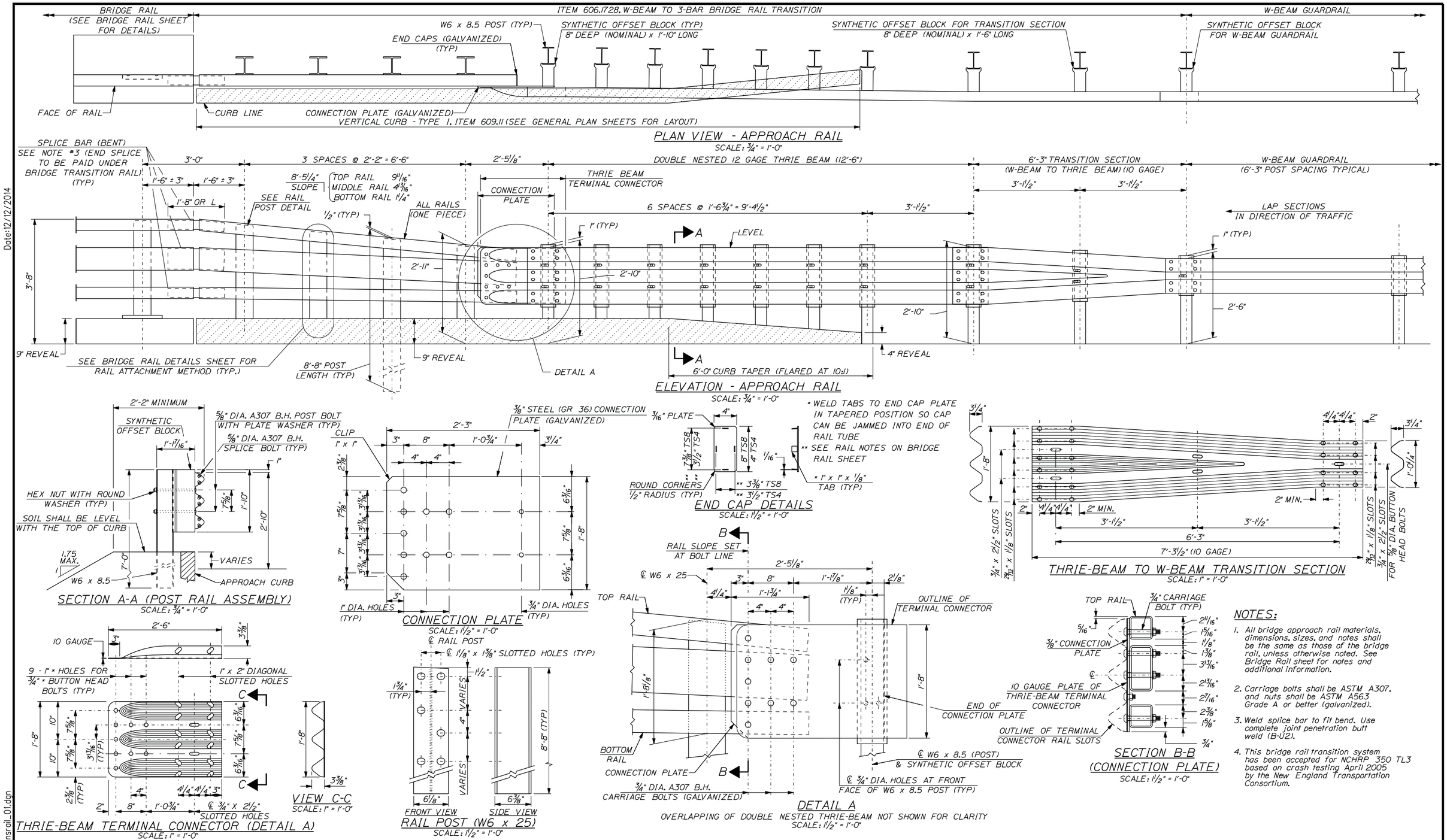

NOTES:

1. All bridge approach rail materials, dimensions, sizes, and notes shall be the same as those of the bridge rail, unless otherwise noted. See Bridge Rail sheet for notes and additional information.
2. Carriage bolts shall be ASTM A307, and nuts shall be ASTM A563 Grade A or better (galvanized).
3. Weld splice bar to fit bend. Use complete joint penetration butt weld (B-U2).
4. This bridge rail transition system has been accepted for NCHRP 350 TL3 based on crash testing April 2005 by the New England Transportation Consortium.

Date: 12/12/2014

Filename: ...\plonset\060_transrail_01.dgn

Scale: AS NOTED

No.	Revision	By	Date

Designed by:

Vanasse Hangen Brustlin, Inc.

CONSULTANT PROJECT MANAGER: T. Bryant

	By	Date		By	Date
Designed	GME	12/14	Checked	LSC	12/14
Drawn	CMD	12/14	In Charge of	TSB	12/14

VANASSE HANGEN BRUSTLIN, INC.
500 Southborough Dr.
Suite 105B
South Portland, ME 04106
TEL (207) 889-3150
FAX (207) 253-5596

MAINE TURNPIKE

THE GOLD STAR MEMORIAL HIGHWAY

MTA PROJECT MANAGER: Ralph Norwood

SUPERSTRUCTURE REPLACEMENT
LUNT'S HILL ROAD UNDERPASS

BRIDGE RAIL TRANSITION

VHB: 55041.00
CONTRACT: 2015.10

SHEET NUMBER: 60

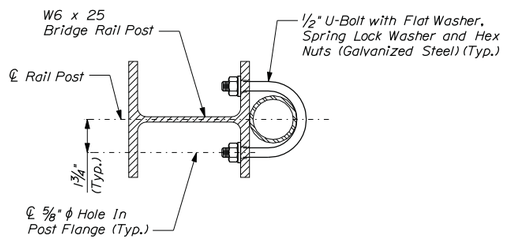

SECTION A-A
(At Interior Post)
Scale: 3" = 1'-0"

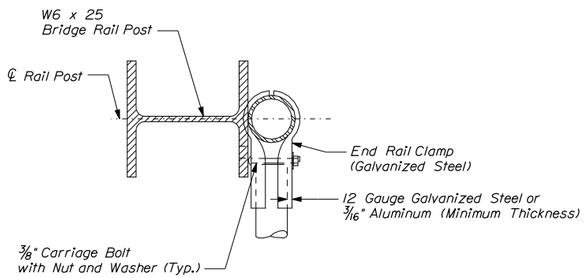

SECTION A-A
(At End Post)
(U-Bolt Not Shown)
Scale: 3" = 1'-0"

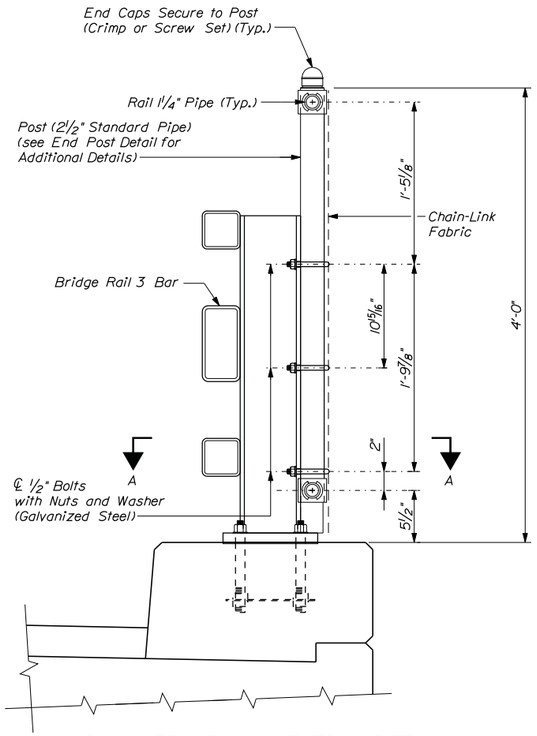

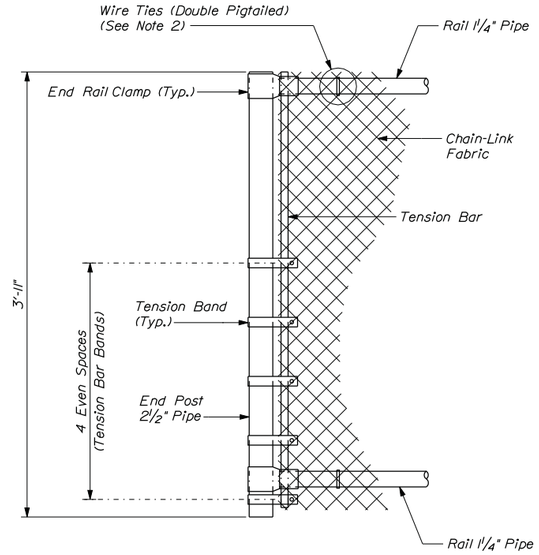

END POST DETAIL
Scale: 1 1/2" = 1'-0"

SNOW FENCE CONNECTION DETAIL
Scale: 1 1/2" = 1'-0"

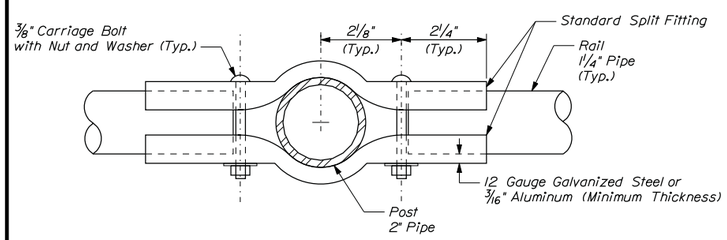

BOULEVARD CLAMP DETAIL
Scale: 6" = 1'-0"

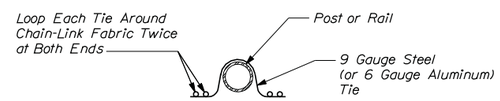

DOUBLE PIGTAILED TIE
Not to Scale

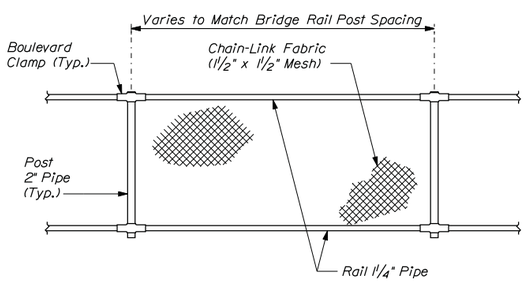

ELEVATION - SNOW FENCE
Not to Scale

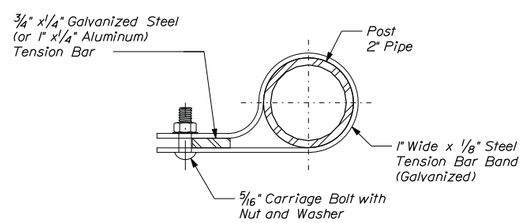

TENSION BAND DETAIL
Scale: 6" = 1'-0"

SNOW FENCE NOTES

1. Chain-link fabric shall be 9 gauge steel, zinc-coated conforming to AASHTO M181, Type I, Class D (ASTM A392), aluminum-coated conforming to AASHTO M181, Type II (ASTM A491). Chain-link fabric shall be knuckled on top and bottom. The size of wire mesh (fabric) shall be 1 1/2".

2. Wire ties shall be standard round 9 gauge zinc- or aluminum-coated steel or 6 gauge aluminum alloy conforming to ASTM F626. All ties shall be wrapped around chain-link fabric twice (double pigtailed) at both ends. Space ties @ 6" o.c. to bottom rail and @ 12" o.c. to all posts and other rails. Mechanical/Power fastened fence ties acceptable.

3. Post and rail pipe shall be hot-dip galvanized steel conforming to AASHTO M181, Grade 1 (ASTM F1083) or aluminum alloy conforming to AASHTO M181 (ASTM B429, alloy 6063-T6). All pipe shall be schedule 40, standard weight. Nominal pipe sizes are shown on the drawing.

4. Tension bars, bar bands, boulevard and end rail clamps shall be steel or aluminum alloy conforming to AASHTO M181 (ASTM F626). Steel components shall be hot-dip galvanized in accordance with AASHTO M111 (ASTM A123) or AASHTO M232 (ASTM A153) as applicable.

5. All bolts and nuts shall be steel conforming to ASTM A307 and ASTM A563 grade a respectively. Washers shall be hardened steel commercial type a plain and shall meet the dimensional requirements of ANSI B18.22. All bolts, nuts and washers shall be hot-dip galvanized in accordance with AASHTO M111 (ASTM A123) or AASHTO M232 (ASTM A153) as applicable.

6. Rail may be field cut (sawn) to fit post spacing. Galvanized rail, cut or drilled as allowed.

7. See Bridge Rail Details Sheet for additional details.

Date:12/12/2014

Filename: ...\cad\st\planset\061_snow_01.dgn

Scale: AS NOTED

No.	Revision	By	Date

Designed by:

Vanasse Hangen Brustlin, Inc.

CONSULTANT PROJECT MANAGER: T. Bryant

	By	Date		By	Date
Designed	GME	12/14	Checked	LSC	12/14
Drawn	CMD	12/14	In Charge of	TSB	12/14

VANASSE HANGEN BRUSTLIN, INC.
500 Southborough Dr.
Suite 105B
South Portland, ME 04106
TEL (207) 889-3150
FAX (207) 253-5596

MAINE TURNPIKE

THE GOLD STAR MEMORIAL HIGHWAY

MTA PROJECT MANAGER: Ralph Norwood

SUPERSTRUCTURE REPLACEMENT
LUNT'S HILL ROAD UNDERPASS

SNOW FENCE DETAILS

VHB: 55041.00
CONTRACT: 2015.10

SHEET NUMBER: 61

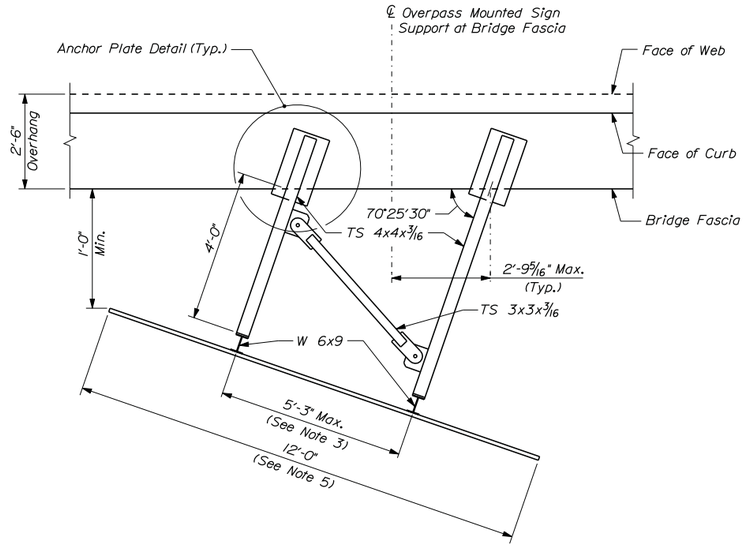

OVERPASS MOUNTED SIGN SUPPORT PLAN - SMALL SIGN PANEL

(Bottom chord lateral bracing not shown for clarity)
Not to Scale

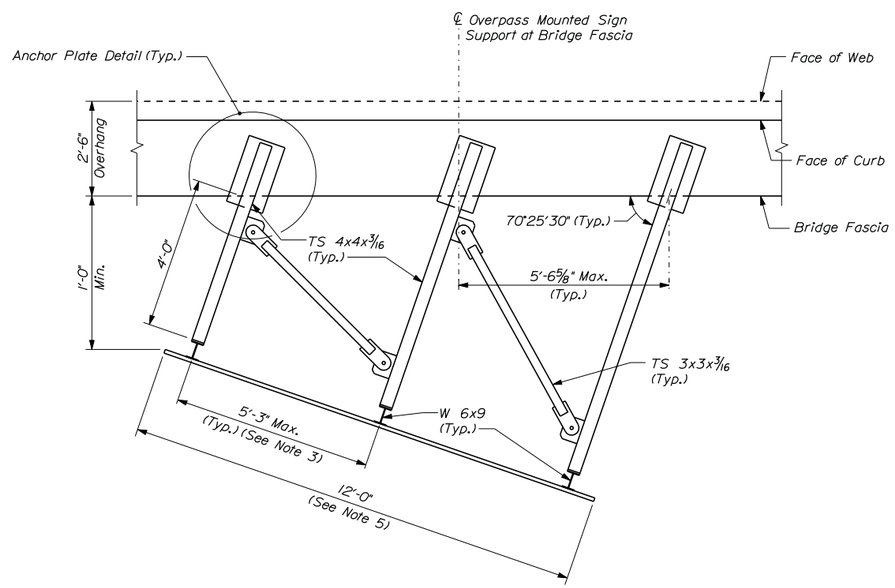

OVERPASS MOUNTED SIGN SUPPORT PLAN - MEDIUM SIGN PANEL

(Bottom chord lateral bracing not shown for clarity)
Not to Scale

NOTES

1. See applicable MaineDOT Standard Details 645(10) - 645(23) for additional details not shown on this sheet.
2. Install 1/2" ϕ high strength galvanized expansion bolt 8" long (1 1/2" above top of concrete) with standard galvanized nut and washer in drilled hole. Fill Hole with high strength non-shrink grout after the expansion bolt is anchored.
3. The spacing of the lateral bracing shall be adjusted as necessary to avoid conflicts with bridge rail posts, and as directed by the Resident.
4. See Bridge Rail Details sheet for location of Overpass Mounted Sign Supports.
5. The signs and W 6x9 sign supports will be installed in a future contract.

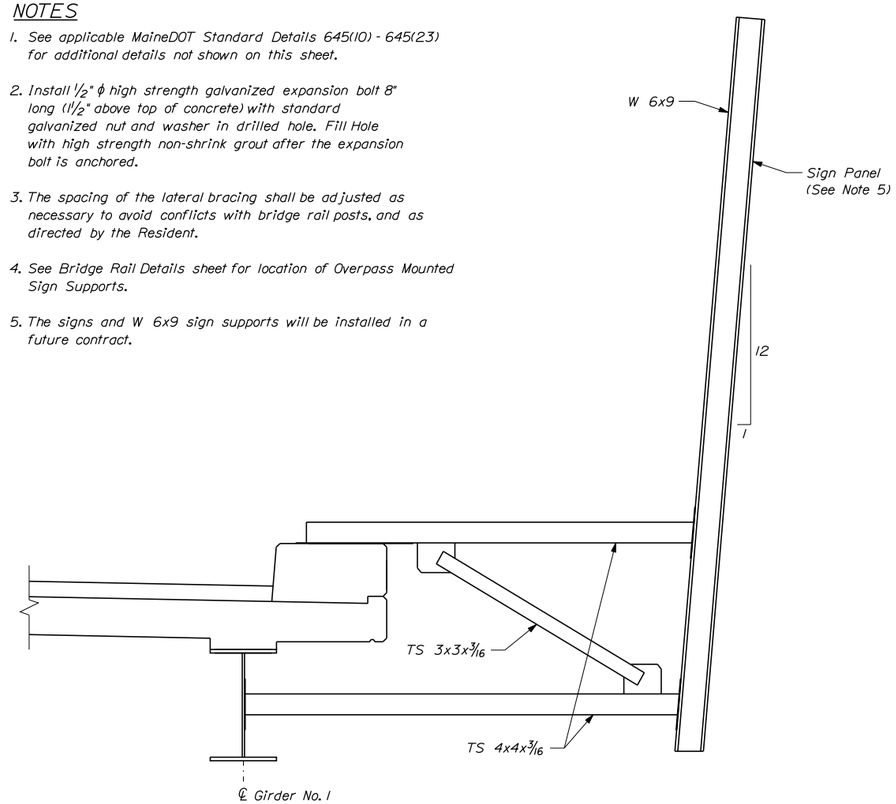

OVERPASS MOUNTED SIGN SUPPORT SECTION

(Small sign panel shown, medium sign panel similar)
Not to Scale

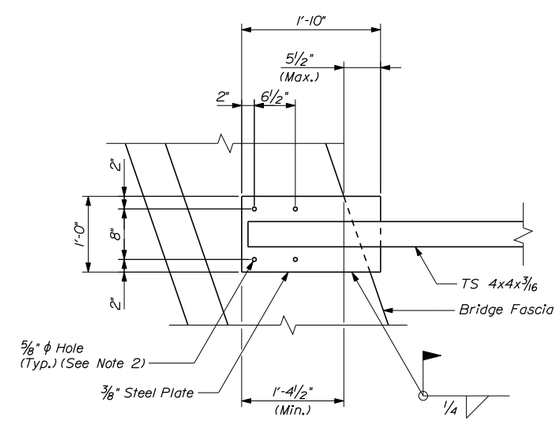

ANCHOR PLATE DETAIL

Not to Scale

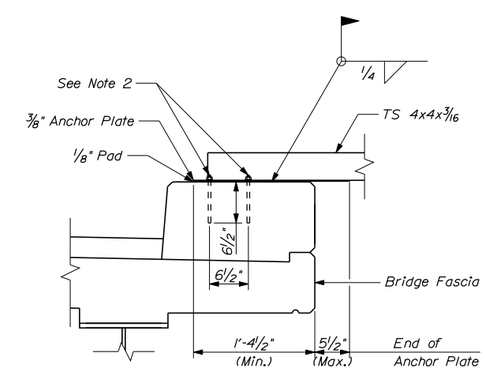

ANCHOR PLATE SECTION

Not to Scale

Date:12/12/2014

Filename: ...\st\planset\062_signsup_01.dgn

Scale: AS NOTED

No.	Revision	By	Date

Designed by:

VHB Vanasse Hangen Brustlin, Inc.

CONSULTANT PROJECT MANAGER: T. Bryant

	By	Date		By	Date
Designed	GME	12/14	Checked	LSC	12/14
Drawn	CMD	12/14	In Charge of	TSB	12/14

VANASSE HANGEN BRUSTLIN, INC.
500 Southborough Dr.
Suite 105B
South Portland, ME 04106
TEL (207) 889-3150
FAX (207) 253-5596

MAINE TURNPIKE

THE GOLD STAR MEMORIAL HIGHWAY

MTA PROJECT MANAGER: Ralph Norwood

SUPERSTRUCTURE REPLACEMENT
LUNT'S HILL ROAD UNDERPASS

SIGN SUPPORT STRUCTURE DETAILS

VHB: 55041.00
CONTRACT: 2015.10

SHEET NUMBER: 62

STRAIGHT BARS

MARK	QTY.	LENGTH	LOCATION	MARK	QTY.	LENGTH	LOCATION
S501	814	29'-2"	Deck Slab and Curbs				
S502	336	45'-0"					
S503	84	33'-0"					
S601	108	26'-0"					
S510	12	29'-2"	Curtain Wall				
S511	4	2'-5"					
A501	60	2'-6"	Abutment No. 1				
A502	4	27'-5"					
A503	8	29'-4"					
A504	3	13'-8"					
A505	2	7'-2"					
A510	58	3'-10"	Abutment No. 1 Wingwalls				
A511	2	6'-0"					
A512	9	13'-11"					
A513	9	14'-8"					
B501	60	1'-8"	Abutment No. 2				
B502	3	27'-5"					
B503	7	29'-4"					
B504	3	13'-8"					
B505	2	6'-1"					
B510	42	4'-1"	Abutment No. 2 Wingwalls				
B511	2	5'-3"					
B512	9	13'-11"					
B513	9	14'-8"					
B514	16	2'-8"					
1P501	6	27'-9"	Pier No. 1				
1P502	5	15'-11"					
1P901	5	28'-8"					
2P501	6	27'-9"	Pier No. 2				
2P502	5	15'-11"					
2P901	5	28'-8"					
3P501	4	27'-9"	Pier No. 3				
3P502	5	15'-11"					
3P901	5	28'-4"					

BENT BARS

MARK	QTY.	LENGTH	TYPE	A	B	C	D	E	F	G	H	O	R	LOCATION
S550	814	5'-5"	C	0'-7"	4'-10"	0'-0"								Deck Slab and Curbs
S551	558	5'-9"	S	0'-10"	1'-3"	1'-7"	1'-3"			0'-10"				
S560	62	3'-7"	L	2'-7"	1'-0"									Curtain Wall
S561	62	3'-10"	L	2'-10"	1'-0"									
S562	12	6'-1"	C	0'-7"	4'-11"	0'-7"								
S563	24	8'-11"	C	0'-7"	7'-9"	0'-7"								
S564	24	3'-3"	G	1'-0"	1'-3"	1'-0"					0'-4"	1'-7"		
S565	104	4'-8"	S		1'-9"	1'-2"	1'-9"							
S566	16	4'-10"	S		1'-9"	0'-8"	2'-5"							
A550	29	6'-5"	S	0'-0"	1'-6"	3'-5"	1'-6"			0'-0"				Abutment No. 1
A551	37	5'-1"	S	0'-0"	1'-6"	2'-1"	1'-6"			0'-0"				
A552	10	3'-9"	L	2'-3"	1'-6"									
A553	3	5'-3"	G	1'-6"	2'-3"	1'-6"					0'-6"	2'-9"		
A554	3	4'-0"	V				2'-3"	1'-9"			1'-7¾"			
A555	3	4'-0"	L	2'-3"	1'-9"									
A556	8	1'-6"	L	1'-0"	0'-6"									
A560	4	3'-0"	V				1'-6"	1'-6"			1'-4"			Abutment No. 1 Wingwalls
A561	2	2'-11"	S	0'-0"	0'-9"	1'-5"	0'-9"			0'-0"				
A562	2	3'-9"	S	0'-0"	1'-2"	1'-5"	1'-2"			0'-0"				
A563	50	4'-1"	S	0'-0"	1'-3"	1'-7"	1'-3"			0'-0"				
A564	8	3'-5"	S	0'-0"	1'-0"	1'-5"	1'-0"			0'-0"				
A565	12	3'-5"	G	0'-10"	1'-9"	0'-10"					0'-3⅜"	2'-0⅜"		
B550	29	4'-5"	S	0'-0"	0'-6"	3'-5"	0'-6"			0'-0"				Abutment No. 2
B551	37	4'-3"	S	0'-0"	1'-1"	2'-1"	1'-1"			0'-0"				
B552	10	2'-7"	L	1'-1"	1'-6"									
B553	2	5'-3"	G	1'-6"	2'-3"	1'-6"					0'-6"	2'-9"		
B554	2	4'-0"	V				2'-3"	1'-9"			1'-7¾"			
B555	2	4'-0"	L	2'-3"	1'-9"									
B556	8	1'-6"	L	1'-0"	0'-6"									
B560	2	3'-0"	V				1'-6"	1'-6"			1'-4"			Abutment No. 2 Wingwalls
B561	50	4'-1"	S	0'-0"	1'-3"	1'-7"	1'-3"			0'-0"				
B562	6	3'-5"	S	0'-0"	1'-0"	1'-5"	1'-0"			0'-0"				
B563	10	3'-5"	G	0'-10"	1'-9"	0'-10"					0'-3⅜"	2'-0⅜"		
1P550	58	2'-7"	C	0'-7"	2'-0"	0'-0"								Pier No. 1
1P551	21	7'-0"	S	0'-0"	2'-2"	2'-8"	2'-2"			0'-0"				
1P552	17	7'-4"	S	0'-0"	2'-4"	2'-8"	2'-4"			0'-0"				
1P553	6	3'-10"	A				2'-0"	1'-10"			1'-9⅜"			
1P554	8	5'-6"	S	0'-0"	1'-6"	2'-6"	1'-6"			0'-0"				
2P550	58	2'-7"	C	0'-7"	2'-0"	0'-0"								Pier No. 2
2P551	21	6'-10"	S	0'-0"	2'-1"	2'-8"	2'-1"			0'-0"				
2P552	17	7'-2"	S	0'-0"	2'-3"	2'-8"	2'-3"			0'-0"				
2P553	6	3'-10"	A				2'-0"	1'-10"			1'-9⅜"			
2P554	8	5'-6"	S	0'-0"	1'-6"	2'-6"	1'-6"			0'-0"				
3P550	58	2'-7"	C	0'-7"	2'-0"	0'-0"								Pier No. 3
3P551	12	5'-6"	S	0'-0"	1'-5"	2'-8"	1'-5"			0'-0"				
3P552	17	6'-0"	S	0'-0"	1'-8"	2'-8"	1'-8"			0'-0"				
3P553	6	3'-2"	A				1'-4"	1'-10"			1'-9⅜"			
3P554	6	5'-6"	S	0'-0"	1'-6"	2'-6"	1'-6"			0'-0"				

Note: The following bars are uncoated (plain): 1P550, 2P550, and 3P550

TYPE - BENDING DIAGRAMS

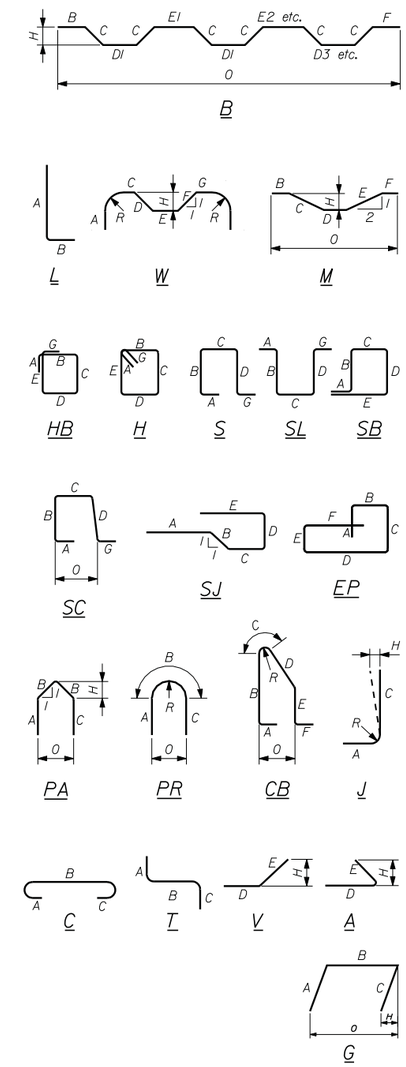

All dimensions are out-to-out of bar.

Bending details and hooks shall conform to the recommendations of the current revision of ACI Standard 315 and ACI Standard 318.

Reinforcing Bar: ASTM A615/A615M, Grade 60

GENERAL NOTES

1. The first digit following the letter(s) of the mark indicate the size of the bar:

   Mark "A502" = bar size #5
   Mark "P805" = bar size #8
   Mark "S650" = bar size #6

No.	Revision	By	Date

Scale: NOT TO SCALE

Designed by:

Vanasse Hangen Brustlin, Inc.

CONSULTANT PROJECT MANAGER: T. Bryant

	By	Date		By	Date
Designed	GME	12/14	Checked	LSC	12/14
Drawn	CMD	12/14	In Charge of	TSB	12/14

VANASSE HANGEN BRUSTLIN, INC.
500 Southborough Dr.
Suite 105B
South Portland, ME 04106
TEL (207) 889-3150
FAX (207) 253-5596

MAINE TURNPIKE

THE GOLD STAR MEMORIAL HIGHWAY

MTA PROJECT MANAGER: Ralph Norwood

SUPERSTRUCTURE REPLACEMENT
LUNT'S HILL ROAD UNDERPASS

REINFORCING STEEL SCHEDULE

VHB: 55041.00
CONTRACT: 2015.10

SHEET NUMBER: 63

Date: 12/12/2014
Filename: ...\st\planset\063_reinsch_01.dgn

Date:12/12/2014

N/F
DAVID & CAROL SMITH
BOOK 9845 PAGE 183

N/F
JOSEPH M. CONNERS, III &
OLETA J. CONNERS
BOOK 11541 PAGE 104

Sta. 132+00
End Project

Sta. 127+50
Begin Project

Stone Bound with Drill Hole Found

Stone Bound with Drill Hole Found

Stone Bound with Drill Hole Found

Iron Pipe Found

133+00 | 132+00 | 131+00 | 130+00 | 129+00 | N75°46'28.01"W | 128+00 | 127+00 | N75°46'28.0

LUNT'S HILL ROAD

5058+00

5057+00

5056+00

N33°48'1.99"E

AER E&T

WETLAND

VP

N/F
MAGGIE M. GILBROOK
BOOK 3652 PAGE 248

MTA R.O.W.

MTA R.O.W.

N/F
HODGKINS FARM, LLC
BOOK 9284 PAGE 310

Existing Right Of Way
1) Maine Turnpike
A) Plan Entitled "Maine Turnpike Authority Maine Turnpike Section 2 - Portland to Augusta Property Plan Town of Litchfield Kennebec County" Dated March 1954 Plan # 19-25.
B) Plan Entitled "Lunts Hill Road Maine Turnpike Authority Maine Turnpike Section 2 - Portland to Augusta Property Plan Town of Litchfield Kennebec County" Dated November 1954 Plan # 23-29.
C) Plan Book 2005 Page 126
D) Plan Book 2005 Page 126
E) Plan Book 2005 Page 88
F) Plan Book 2006 Page 52
G) Plan Book 2008 Page 173
H) Plan Book 2009 Page 11

Control Information
1) Horizontal Datum - State Plane Zone - Maine 2000 West Zone-Geiod 12a
Vertical Datum - NAVD88

Survey Notes
1) This Plan Is a Result of a Field Survey Performed by Vanasse Hangen Brustlin, Inc. In July 2014.

Scale: 25 0 25 50
Scale of Feet

No.	Revision	By	Date

Designed by:
Vanasse Hangen Brustlin, Inc.

CONSULTANT PROJECT MANAGER: T. Bryant

	By	Date		By	Date
Designed	GME	12/14	Checked	LSC	12/14
Drawn	CMD	12/14	In Charge of	TSB	12/14

VANASSE HANGEN BRUSTLIN, INC.
500 Southborough Dr.
Suite 105B
South Portland, ME 04106
TEL (207) 889-3150
FAX (207) 253-5596

MAINE TURNPIKE

THE GOLD STAR MEMORIAL HIGHWAY

MTA PROJECT MANAGER: Ralph Norwood

SUPERSTRUCTURE REPLACEMENT
LUNT'S HILL ROAD UNDERPASS

RIGHT OF WAY MAP

VHB: 55041.00
CONTRACT: 2015.10

SHEET NUMBER: 64
64 OF 76

Filename: ...\planset\064_rightofway_01.dgn

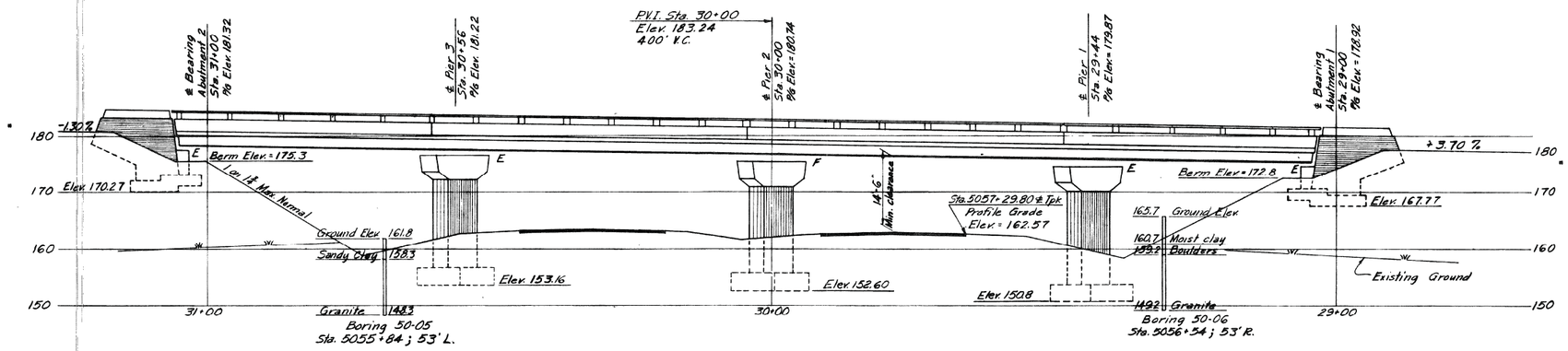

ELEVATION

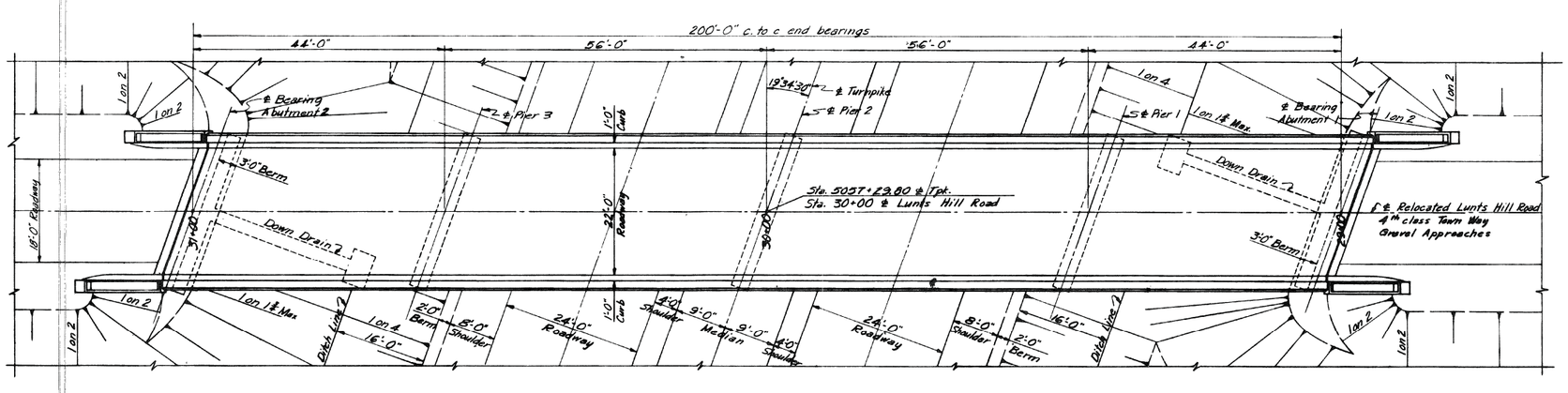

PLAN

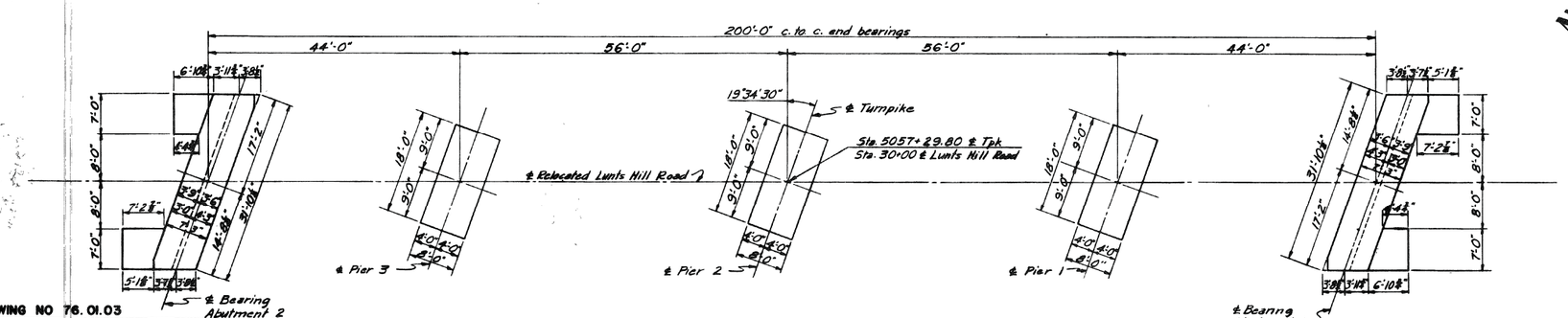

FOOTING PLAN

GENERAL NOTES

Design Specifications: AASHO (1953) with minor modifications.
Design Live Load: H 15
Maximum Soil Pressure: Abutments - 1.2 Tons/sq. ft.
Piers - 4.0 Tons/sq. ft.

REFERENCES

Drawing Number	Title	Substruct. Contract	Superstructure Steel Fab.	Superstructure Steel Erect.	Superstructure Floor Contract
SD-1A	Standard Abutment Details	✓	✓	✓	✓
SD-2	Standard Pier Details	✓	✓	✓	
SD-3	Abutment Drainage Details	✓			
SD-5	Standard Handrail, Bearing Devices & miscellaneous Details	✓	✓	✓	✓
SD-6	Standard Diaphragm Details		✓	✓	✓
SD-7	Standard Splices for 27 WF Beams		✓	✓	
SD-11A	Roadway Expansion Joint Type Y	✓	✓	✓	✓
SD-14	Standard Brige Floor Cross-section. 20'-0" & 22'-0" Roadways.	✓	✓	✓	✓

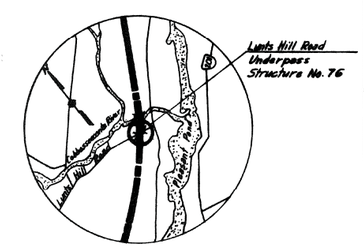

VICINITY MAP
Scale: 1" = 1 mile

DRAWING NO 76.01.03

	BY	DATE	No.	REVISION	BY	DATE
MADE	RFS	4-23-54				
TRACED			2	As-Built	HBN	12-5-96
CHECKED	WCM	4-30-54	1	Pier Ftg. Elev.	CYA	10-28-93
IN CHARGE OF	IDSK					

MAINE TURNPIKE AUTHORITY
MAINE TURNPIKE
SECTION 2 - PORTLAND TO AUGUSTA

STRUCTURE NO. 76 — TURNPIKE UNDER
LUNTS HILL ROAD
STA. 5057 + 29.80
GENERAL PLAN AND ELEVATION

HOWARD, NEEDLES, TAMMEN & BERGENDOFF
CONSULTING ENGINEERS
NEW YORK — KANSAS CITY

SCALE: 1/8" = 1'-0"
CONTRACT NO.
SHEET NO. 33A OF 33B

Date: 12/12/2014

Filename: ...\st\planset\065_asbuilt_01.dgn

Scale: NOT TO SCALE

No.	Revision	By	Date

Designed by:
Vanasse Hangen Brustlin, Inc.

CONSULTANT PROJECT MANAGER: T. Bryant

	By	Date		By	Date
Designed	GME	12/14	Checked	LSC	12/14
Drawn	CMD	12/14	In Charge of	TSB	12/14

VANASSE HANGEN BRUSTLIN, INC.
500 Southborough Dr.
Suite 105B
South Portland, ME 04106
TEL (207) 889-3150
FAX (207) 253-5596

MAINE TURNPIKE
THE GOLD STAR MEMORIAL HIGHWAY
MTA PROJECT MANAGER: Ralph Norwood

SUPERSTRUCTURE REPLACEMENT
LUNT'S HILL ROAD UNDERPASS

AS-BUILTS AND STANDARD DETAILS

VHB: 55041.00
CONTRACT: 2015.10
SHEET NUMBER: 65
65 OF 76

76.02.03

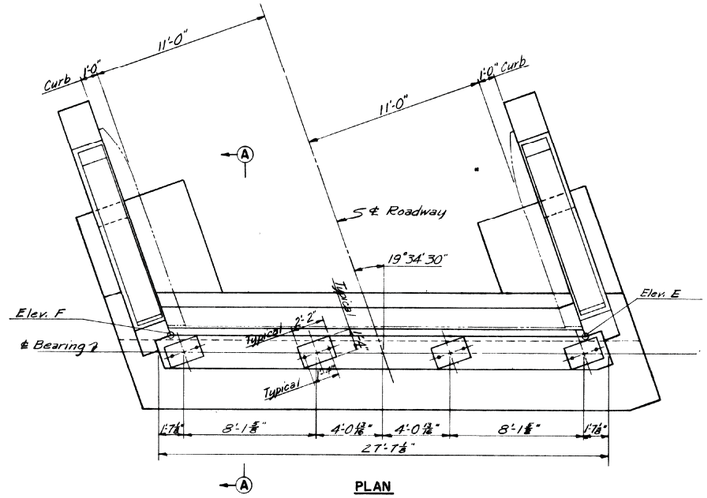

PLAN

ELEVATIONS					
Point	Abutment 1	Abutment 2	Pier 1	Pier 2	Pier 3
A	174.93	177.43	175.98	176.78	177.28
B	175.12	177.55	176.05	176.92	177.41
C	175.18	177.55	176.10	176.95	177.43
D	175.13	177.43	176.03	176.87	177.32
E	174.85	177.35	175.86	176.76	177.26
F	174.85	177.35	150.80	152.60	153.16
G	177.86	180.39			
H	178.05	180.40			
I	180.37	183.32			
J	180.68	183.31			
K	180.76	183.31			
L	180.46	183.29			
M	167.77	170.27			

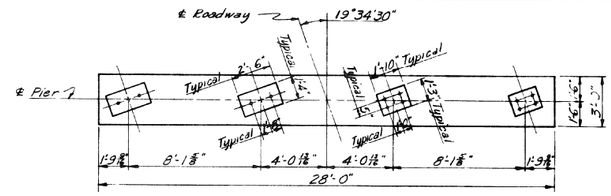

HALF CAP PLAN
PIERS 1 & 3

HALF CAP PLAN
PIER 2

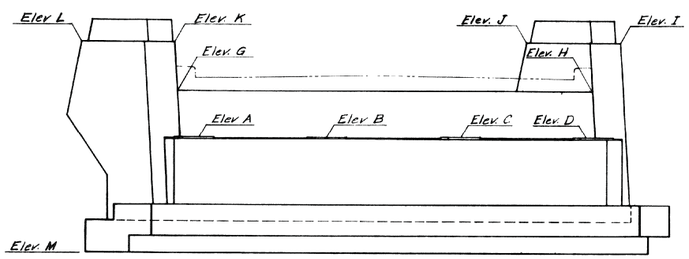

ELEVATION

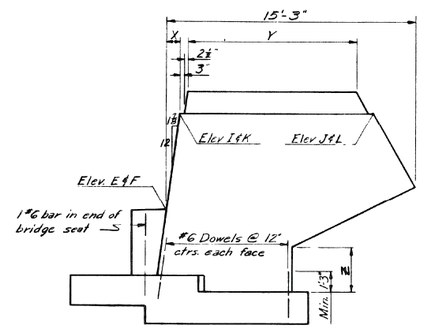

END ELEVATION

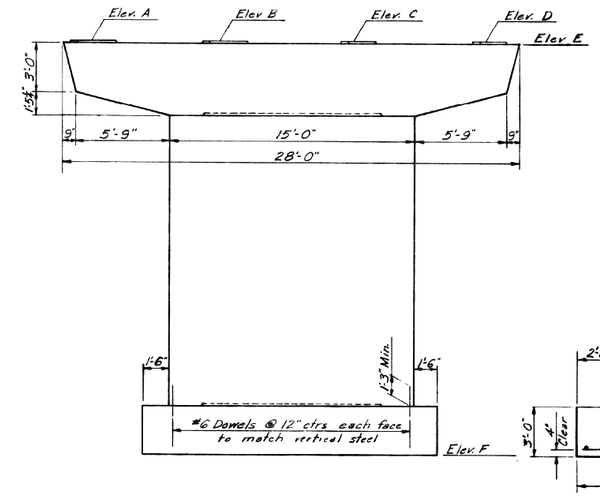

ELEVATION

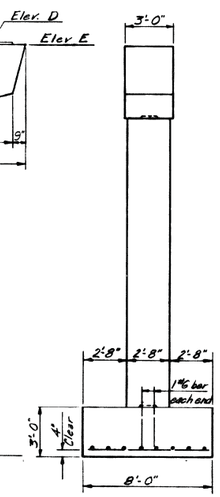

END ELEVATION

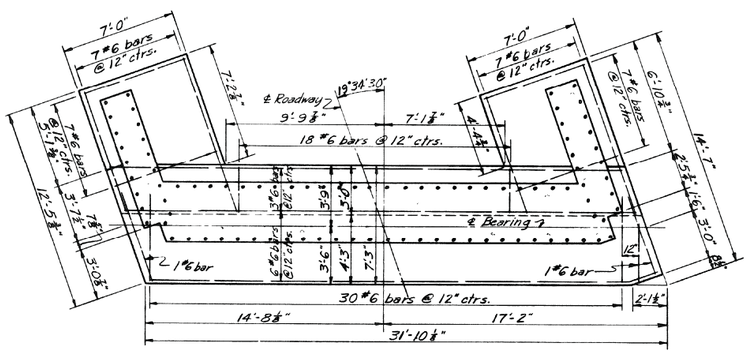

FOOTING PLAN

WINGWALL DIMENSIONS				
Point	Abutment 1		Abutment 2	
	N. Wall	S. Wall	N. Wall	S. Wall
X	11⅛"	11⅛"	11⅛"	11⅛"
Y	10'-3"	10'-2⅞"	10'-2⅞"	10'-2⅞"
Z	2'-5⅛"	2'-7⅞"	2'-9½"	2'-9½"

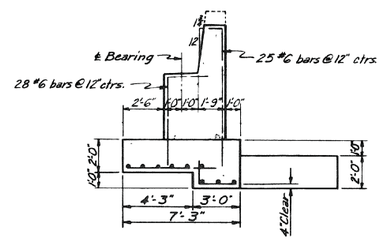

SECTION A-A

ABUTMENTS

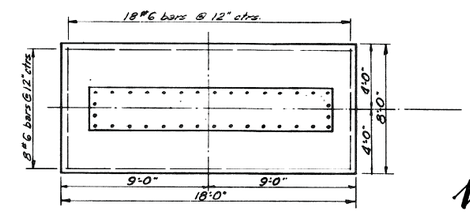

FOOTING PLAN

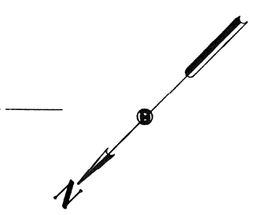

PIERS

DRAWING NO 76.02.03

	BY	DATE				
MADE	RFS	4-22-54				
TRACED			2	As-Built	HBH	1-25-56
CHECKED	WCM	4-30-54	1	Per Rfg. Elev.	CVA	10-28-55
IN CHARGE OF	IDSK		No.	REVISION	BY	DATE

MAINE TURNPIKE AUTHORITY
MAINE TURNPIKE
SECTION 2 — PORTLAND TO AUGUSTA

STRUCTURE NO. 76 — TURNPIKE UNDER
LUNTS HILL ROAD
STA. 5057 + 29.50
SUBSTRUCTURE

HOWARD, NEEDLES, TAMMEN & BERGENDOFF
CONSULTING ENGINEERS
NEW YORK — KANSAS CITY

SCALE: ¼"=1'-0"
CONTRACT NO.
SHEET NO. 337 OF 382

Scale: NOT TO SCALE

No.	Revision	By	Date

Designed by:

VHB Vanasse Hangen Brustlin, Inc.

CONSULTANT PROJECT MANAGER: T. Bryant

	By	Date		By	Date
Designed	GME	12/14	Checked	LSC	12/14
Drawn	CMD	12/14	In Charge of	TSB	12/14

VANASSE HANGEN BRUSTLIN, INC.
500 Southborough Dr.
Suite 105B
South Portland, ME 04106
TEL (207) 889-3150
FAX (207) 253-5596

MAINE TURNPIKE

THE GOLD STAR MEMORIAL HIGHWAY

MTA PROJECT MANAGER: Ralph Norwood

SUPERSTRUCTURE REPLACEMENT
LUNT'S HILL ROAD UNDERPASS

AS-BUILTS AND STANDARD DETAILS

VHB: 55041.00
CONTRACT: 2015.10

SHEET NUMBER: 66
66 OF 76

Date: 12/12/2014

Filename: ...\st\planset\066_asbuilt_02.dgn

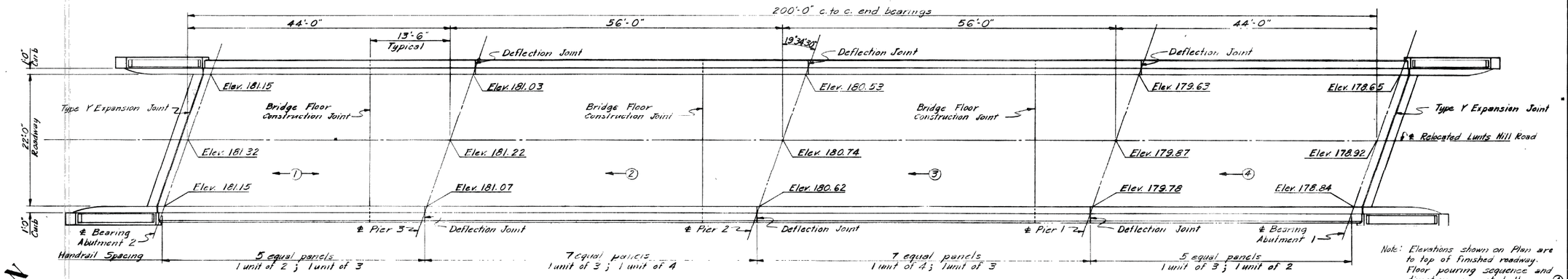

PLAN

Note: Elevations shown on Plan are to top of finished roadway. Floor pouring sequence and direction are noted thus — ①. Use 7" Floor (non-composite design) as shown on Standard Drawing No. 14.

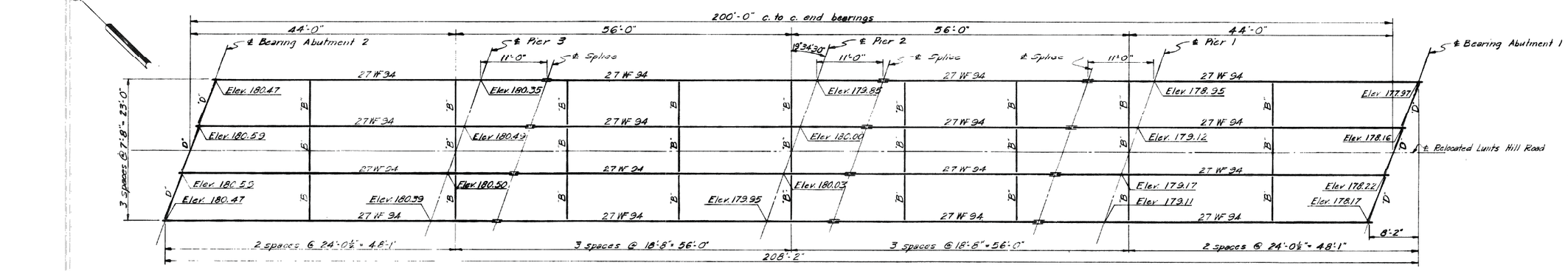

FRAMING PLAN

Note: Elevations shown on Framing Plan are to tops of beam flanges. Diaphragms are denoted thus – "B" or "D". All stiffener angles at points of support are L 7"×4"×5/8". Slope shown at ends of beams is true with respect to axis of beam only.

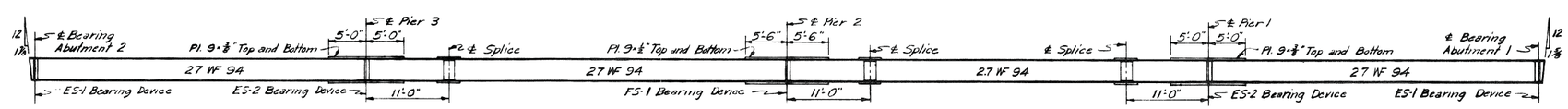

INTERIOR BEAM ELEVATION

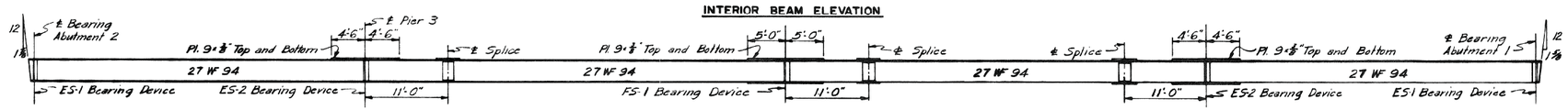

EXTERIOR BEAM ELEVATION

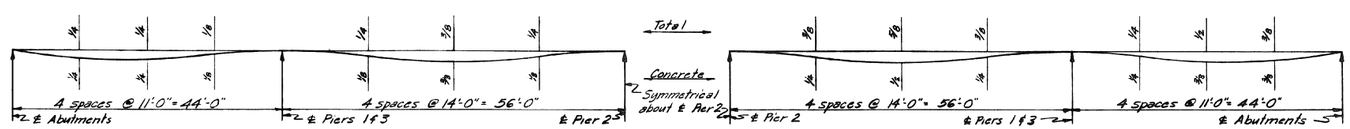

INTERIOR BEAMS — DEAD LOAD DEFLECTION DIAGRAMS — EXTERIOR BEAMS

DRAWING NO 76.03.03

	BY	DATE				
MADE	RFS	4-26-54				
TRACED						
CHECKED	WCM	4-30-54	1	As-Built	HBH	12-5-56
IN CHARGE OF IDSK			No.	REVISION	BY	DATE

MAINE TURNPIKE AUTHORITY
MAINE TURNPIKE
SECTION 2 – PORTLAND TO AUGUSTA

STRUCTURE NO. 76 — TURNPIKE UNDER
LUNTS HILL ROAD
STA. 5057 + 29.80
SUPERSTRUCTURE

HOWARD, NEEDLES, TAMMEN & BERGENDOFF
CONSULTING ENGINEERS
NEW YORK — KANSAS CITY

SCALE: 1/8"=1'-0"
CONTRACT NO. _____
SHEET NO. 330 OF 386

Date:12/12/2014

Filename: ...\st\planset\067_asbuilt_03.dgn

Scale: NOT TO SCALE

No.	Revision	By	Date

Designed by:
Vanasse Hangen Brustlin, Inc.

CONSULTANT PROJECT MANAGER: T. Bryant

	By	Date		By	Date
Designed	GME	12/14	Checked	LSC	12/14
Drawn	CMD	12/14	In Charge of	TSB	12/14

VANASSE HANGEN BRUSTLIN, INC.
500 Southborough Dr.
Suite 105B
South Portland, ME 04106
TEL (207) 889-3150
FAX (207) 253-5596

MAINE TURNPIKE
THE GOLD STAR MEMORIAL HIGHWAY
MTA PROJECT MANAGER: Ralph Norwood

SUPERSTRUCTURE REPLACEMENT
LUNT'S HILL ROAD UNDERPASS

AS-BUILTS AND STANDARD DETAILS

VHB: 55041.00
CONTRACT: 2015.10
SHEET NUMBER: 67
67 OF 76

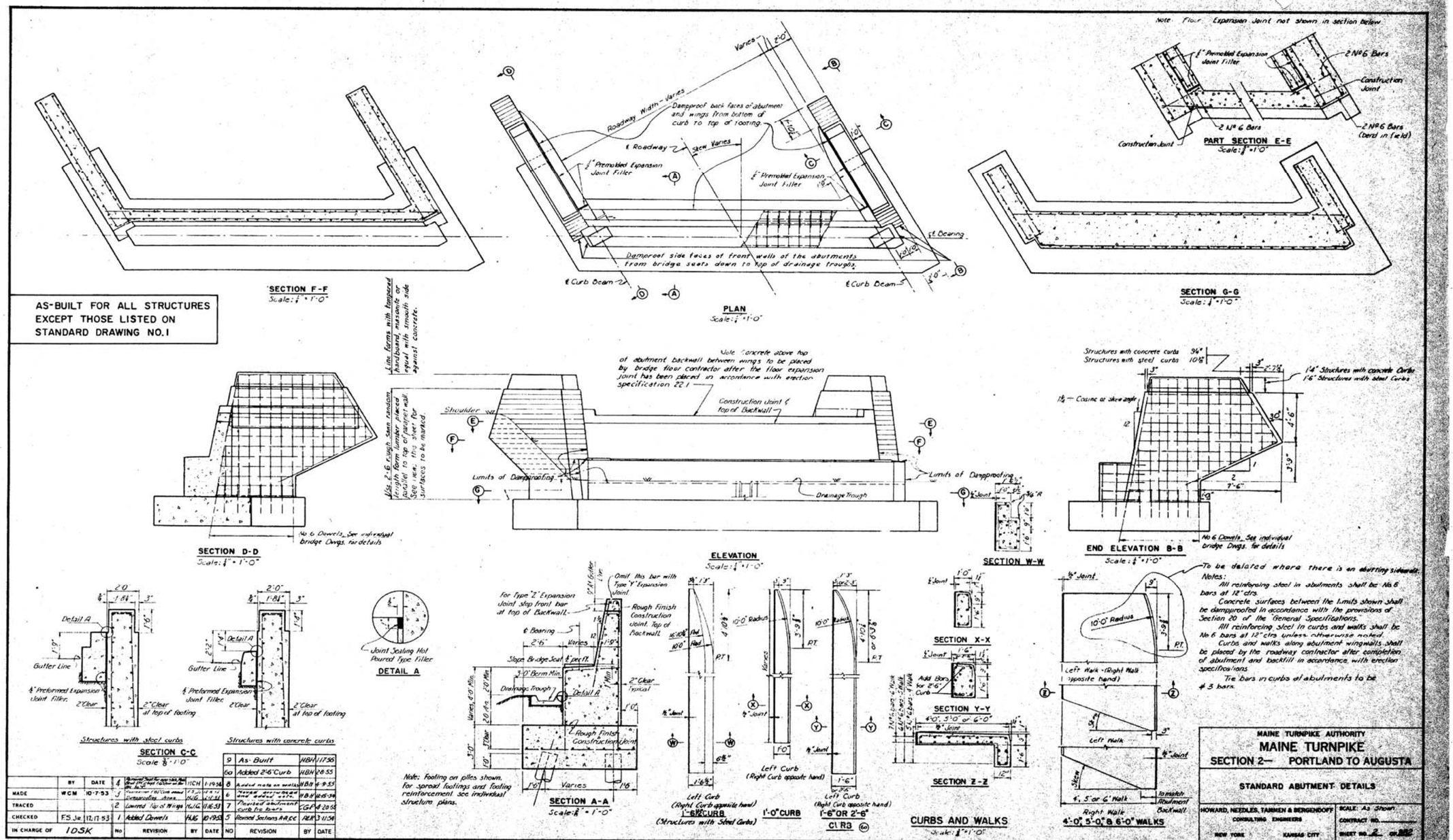

Date:12/12/2014

Filename: ...\st\planset\068_asbuilt_04.dgn

Scale: NOT TO SCALE

No.	Revision	By	Date

Designed by:

Vanasse Hangen Brustlin, Inc.

CONSULTANT PROJECT MANAGER: T. Bryant

	By	Date		By	Date
Designed	GME	12/14	Checked	LSC	12/14
Drawn	CMD	12/14	In Charge of	TSB	12/14

VANASSE HANGEN BRUSTLIN, INC.
500 Southborough Dr.
Suite 105B
South Portland, ME 04106
TEL (207) 889-3150
FAX (207) 253-5596

MAINE TURNPIKE

THE GOLD STAR MEMORIAL HIGHWAY

MTA PROJECT MANAGER: Ralph Norwood

SUPERSTRUCTURE REPLACEMENT
LUNT'S HILL ROAD UNDERPASS

AS-BUILTS AND STANDARD DETAILS

VHB: 55041.00
CONTRACT: 2015.10

SHEET NUMBER: 68

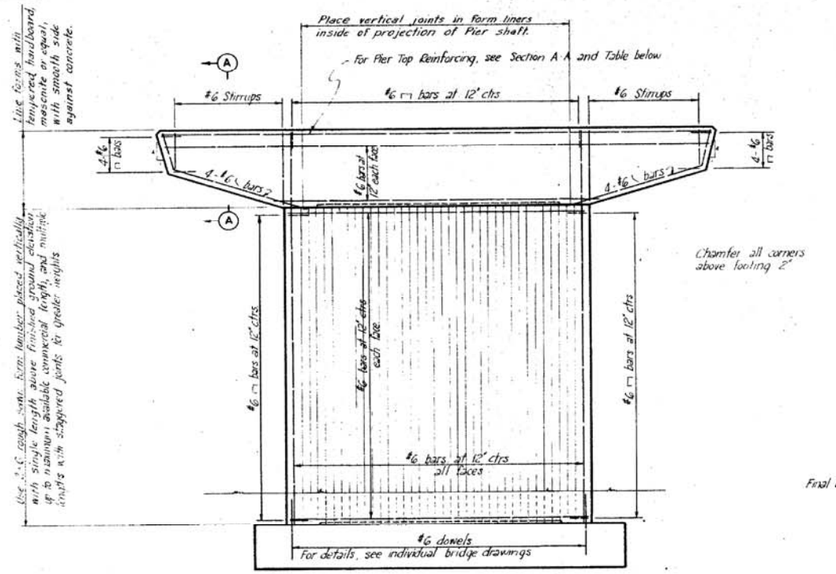

ELEVATION

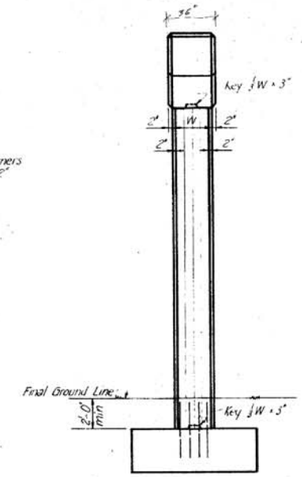

END VIEW

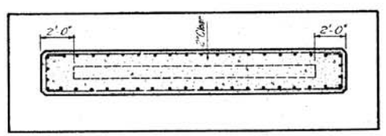

FOOTING PLAN

For Footing Reinforcing see individual bridge drawings

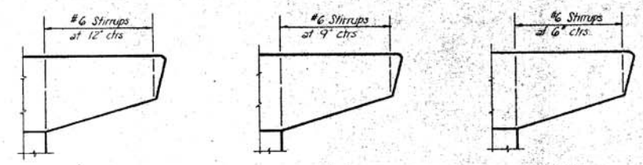

TYPE "M" TYPE "N" TYPE "O"

STIRRUP SPACING

Note
For Pier Top Reinforcing, (per layer) see Table below

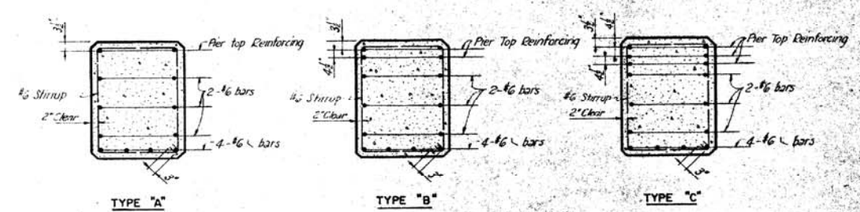

TYPE "A" TYPE "B" TYPE "C"

SECTION A-A

Bridge Number	1	2	3	4	5	6	7	8	9 Pier 1	9 Pier 2&3	11	12 W.E.	12 E.E.	13	14	15	16 W.E.	16 E.E.	17	18	19	21	22	23	24	25	26	27	28	29	30	31	33	34	35	38	39	40	41	42	43	44	45
Type of Section A-A	B	B	B	B	B	C	B	C	B	B	B	B	B	B	B	B	B	B	B	B	B	B	B	B	B	B	B	*	—	B	A	—	B	A	B	B	B	C	A	A	A	B
Pier Top Reinforcing - Per Layer	5-#11	7-#11	7-#10	5-#11	4-#11	5-#10	7-#11	6-#10	4-#11	5-#11	5-#11	7-#10 #11	6-#11	5-#11	5-#11	5-#11	5-#11 #11	7-#10 #11	7-#11	6-#11	5-#11	5-#11	4-#10	6-#11	4-#11	4-#11	5-#11	*	—	4-#10	5-#11	—	4-#10	5-#11	4-#10	4-#11	5-#11	4-#10	6-#11	5-#11	5-#9	5-#9	4-#10
Type of Stirrup Spacing	M	M	M	M	M	M	M	O	M	M	M	M	M	M	M	M	M	M	M	M	M	M	M	M	M	M	M	M	—	M	M	—	M	M	M	M	M	M	M	M	M	M	M

Bridge Number	46	47	48	49	50	51	52	53	54	55	56	57 N.B.	58	59	60 Pier 1	61	62	63	64	65	66	67	68	69	70	71	72	73	74	75 Pier 2&3	76	77	78	79	80	81	82	83	85	86	87	88 Pier 1	88 Pier 2	88 Pier 3
Type of Section A-A	—	B	B	B	—	B	B	A	B	—	B	B	B	B	B	C	A	B	B	B	B	A	B	A	A	B	B	B	B	D	B	A	B	B	C	B	B	—	A	B	B	B	C	B	B
Pier Top Reinforcing - Per Layer	—	4-#10	4-#11	4-#10	—	5-#11	4-#10	5-#11	4-#11	—	4-#11	4-#10	5-#11	4-#10	6-#11	5-#11	4-#10	4-#10	4-#11	4-#11	5-#11	5-#11	5-#9	5-#9	5-#11	4-#11	5-#11	5-#11	6-#11	5-#10	4-#10	4-#10	5-#10	4-#11	4-#11	—	5-#11	4-#10	4-#11	4-#11	5-#11	5-#11	7-#11	6-#11
Type of Stirrup Spacing	—	M	M	M	—	M	M	M	M	—	M	M	M	M	M	M	M	M	M	M	M	M	M	M	M	M	M	M	M	M	M	M	M	M	M	M	—	M	M	M	M	M	M	M	M

Bridge Number	1A	3A	44A	10A	69A	56A	58A	58B
Type of Section A-A	C	B	A	B	A	B	—	B
Pier Top Reinforcing - Per Layer	5-#10	4-#10	5-#11	5-#10	5-#9	4-#10	—	4-#11
Type of Stirrup Spacing	M	M	M	M	M	M	—	M

* Pier top reinforcing shown on Bridge Drawing 27.03.05

	BY	DATE	No	REVISION	BY	DATE
MADE	TKC	9-22-93	4	As-Built	KBH	11-7-95
TRACED	TKC	10-22-93	3	Bridge 26 Pier Top Reinforcing Per Layer	WCM	4-28-94
CHECKED			2	Bridge 8 Pier Top Reinforcing Per Layer	WCM	4-27-94
IN CHARGE OF	DSL		1	Added clear distance of stirrup to edge of beam	RRR	3-9-94

MAINE TURNPIKE AUTHORITY
MAINE TURNPIKE
SECTION 2— PORTLAND TO AUGUSTA

STANDARD PIER DETAILS

HOWARD, NEEDLES, TAMMEN & BERGENDOFF
CONSULTING ENGINEERS
NEW YORK KANSAS CITY

SCALE: NO SCALE
CONTRACT NO.
SHEET NO. 3 OF 3

STANDARD DRAWING NO. 2

Date:12/12/2014

Filename: ...\st\planset\069_asbuilt_05.dgn

Scale: NOT TO SCALE

No.	Revision	By	Date

Designed by:

VHB Vanasse Hangen Brustlin, Inc.

CONSULTANT PROJECT MANAGER: T. Bryant

	By	Date		By	Date
Designed	GME	12/14	Checked	LSC	12/14
Drawn	CMD	12/14	In Charge of	TSB	12/14

VANASSE HANGEN BRUSTLIN, INC.
500 Southborough Dr.
Suite 105B
South Portland, ME 04106
TEL (207) 889-3150
FAX (207) 253-5596

MAINE TURNPIKE

THE GOLD STAR MEMORIAL HIGHWAY

MTA PROJECT MANAGER: Ralph Norwood

SUPERSTRUCTURE REPLACEMENT
LUNT'S HILL ROAD UNDERPASS

AS-BUILTS AND STANDARD DETAILS

VHB: 55041.00
CONTRACT: 2015.10

SHEET NUMBER: 69
69 OF 76

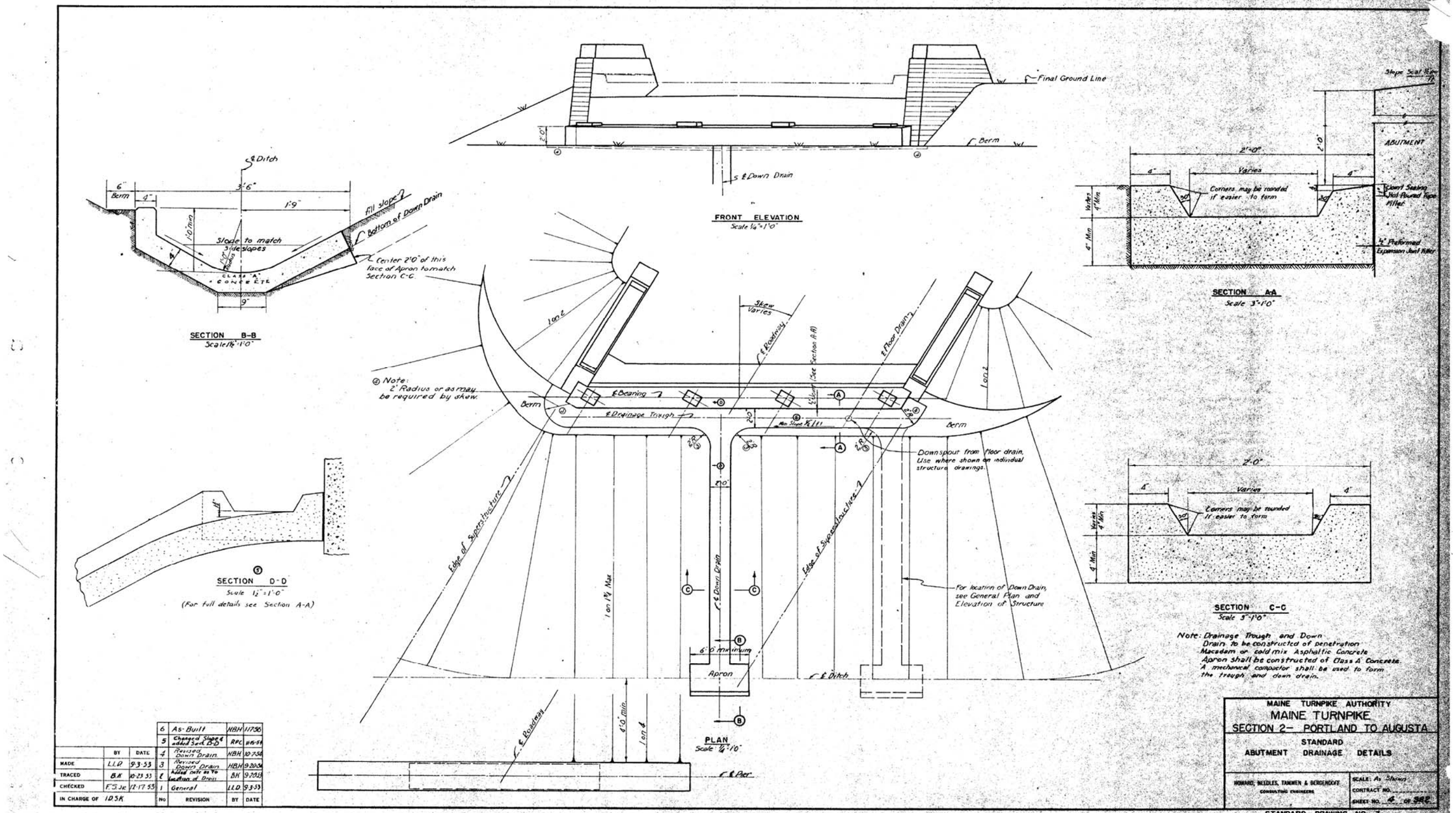

	BY	DATE
MADE	L.L.D.	9-3-53
TRACED	B.K.	10-23-53
CHECKED	F.S.Je	12-17-53
IN CHARGE OF	D.S.K.	

No	REVISION	BY	DATE
6	As-Built	HBH	11/7/56
5	Changed Slope & added Sect. D-D	RPC	11-6-54
4	Revised Down Drain	HBH	10-7-54
3	Revised Down Drain Added note as to location of Drain	HBH	9-20-54
2		BK	9-20-53
1	General	L.L.D.	9-3-53

Date:12/12/2014

Filename: ...\st\planset\070_asbuilt_06.dgn

Scale: NOT TO SCALE

No.	Revision	By	Date

Designed by:

VHB Vanasse Hangen Brustlin, Inc.

CONSULTANT PROJECT MANAGER: T. Bryant

	By	Date		By	Date
Designed	GME	12/14	Checked	LSC	12/14
Drawn	CMD	12/14	In Charge of	TSB	12/14

VANASSE HANGEN BRUSTLIN, INC.
500 Southborough Dr.
Suite 105B
South Portland, ME 04106
TEL (207) 889-3150
FAX (207) 253-5596

MAINE TURNPIKE

THE GOLD STAR MEMORIAL HIGHWAY

MTA PROJECT MANAGER: Ralph Norwood

SUPERSTRUCTURE REPLACEMENT
LUNT'S HILL ROAD UNDERPASS

AS-BUILTS AND STANDARD DETAILS

VHB: 55041.00
CONTRACT: 2015.10

SHEET NUMBER: 70

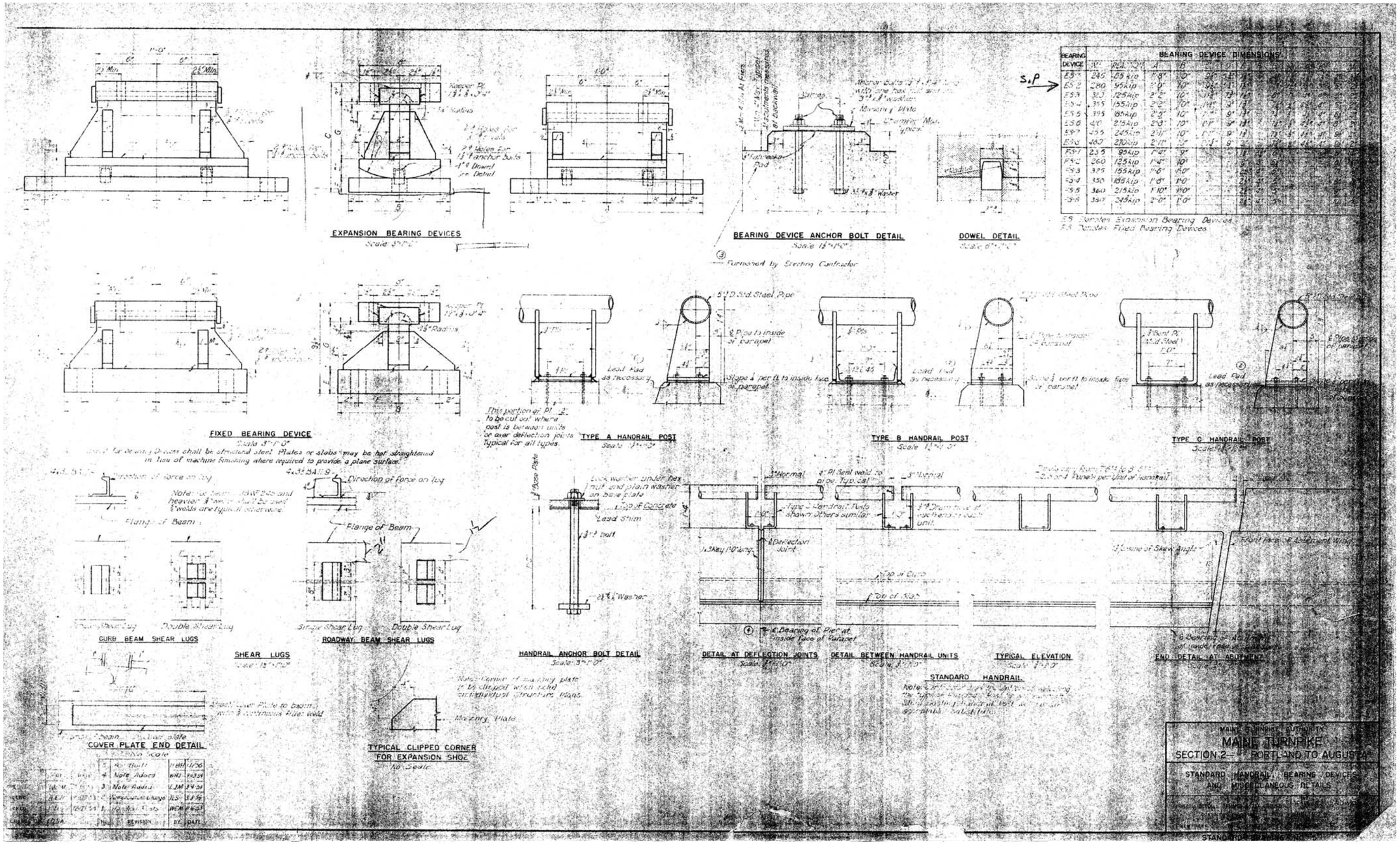

Date:12/12/2014

Filename: ...\st\planset\071_asbuilt_07.dgn

Scale: NOT TO SCALE

No.	Revision	By	Date

Designed by:

VHB Vanasse Hangen Brustlin, Inc.

CONSULTANT PROJECT MANAGER: T. Bryant

	By	Date		By	Date
Designed	GME	12/14	Checked	LSC	12/14
Drawn	CMD	12/14	In Charge of	TSB	12/14

VANASSE HANGEN BRUSTLIN, INC.
500 Southborough Dr.
Suite 105B
South Portland, ME 04106
TEL (207) 889-3150
FAX (207) 253-5596

MAINE TURNPIKE

THE GOLD STAR MEMORIAL HIGHWAY

MTA PROJECT MANAGER: Ralph Norwood

SUPERSTRUCTURE REPLACEMENT
LUNT'S HILL ROAD UNDERPASS

AS-BUILTS AND STANDARD DETAILS

VHB: 55041.00
CONTRACT: 2015.10

SHEET NUMBER: 71

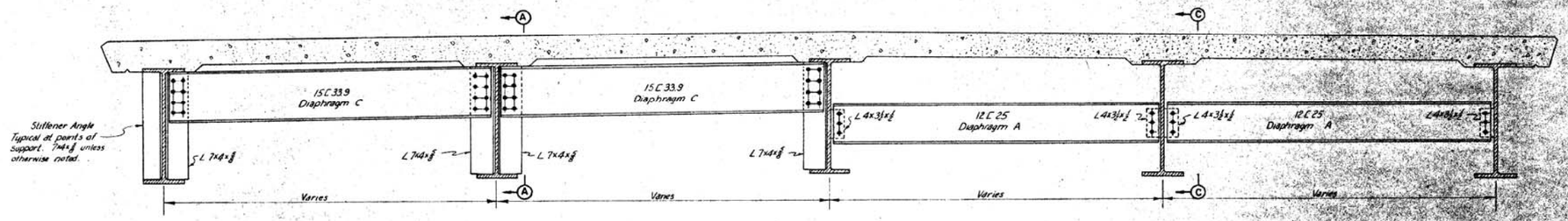

END DIAPHRAGMS OF RECTANGULAR SPANS

INTERIOR DIAPHRAGMS OF RECTANGULAR SPANS

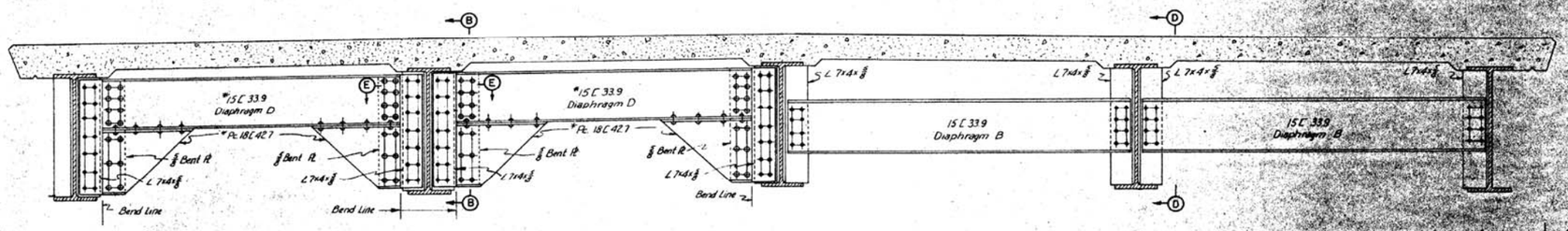

END DIAPHRAGMS OF SKEWED SPANS

INTERIOR DIAPHRAGMS OF SKEWED SPANS
And at points of support of non-skewed spans

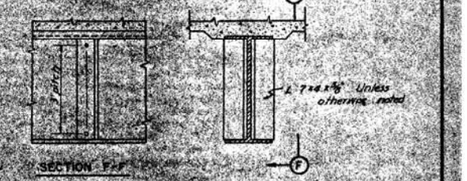

SECTION F-F

TYPICAL BEARING STIFFENER
To be used at points of support where diaphragm connections do not exist.

Note: Stiffener angles at points of support shall be milled to bear at bottom and tight fit at top. All other angles shall be tight fit.

Note: All rivets are ⅞" ϕ, holes 15/16" unless noted otherwise.

*Note
The size of diaphragm channels shall increase with the span between beams on the skew, with a corresponding reduction in the size of knee brace channels as shown in the following table.

SPAN	DIAPHRAGM CHANNEL	KNEE BRACE CHANNEL				
	Beam Size	24 W#	27 W#	30 W#	33 W#	36 W#
0 to 9'-6"	15 C 33.9	omit	10 C 20	12 C 25	15 C 33.9	18 C 42.7
9'-6" to 11'-0"	18 C 42.7	omit	10 C 20	9 C 15	12 C 25	15 C 33.9
11'-0" to 13'-0"	18 C 51.9	omit	10 C 20	9 C 15	12 C 25	15 C 33.9
Over 13'-0"	Special Design					

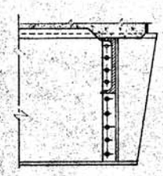

SECTION A-A

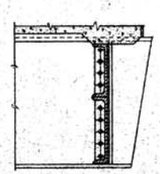

SECTION B-B

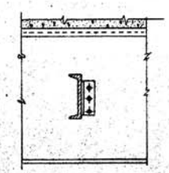

SECTION C-C

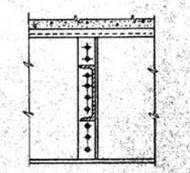

SECTION D-D

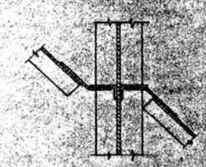

SECTION E-E

	BY	DATE	No.	REVISION	BY	DATE
MADE	LIB	9-4-53	4	As-Built	HBH	V-17-50
TRACED	HJG	10-24-53	3	Stiffener Note	WCM	1-8-54
CHECKED	F.S. JK	12-8-53	2	Diaphragm Designed	HJG	10-13-53
IN CHARGE OF	JDSK		1	Redrawn	LIB	9-4-53

MAINE TURNPIKE AUTHORITY
MAINE TURNPIKE
SECTION 2 — PORTLAND TO AUGUSTA
STANDARD DIAPHRAGM DETAILS
HOWARD, NEEDLES, TAMMEN & BERGENDOFF CONSULTING ENGINEERS
SCALE: 3/4" = 1'-0"
CONTRACT NO.
SHEET NO. 8 OF 332
STANDARD DRAWING NO. 6

Date:12/12/2014

Filename: ...\st\planset\072_asbuilt_08.dgn

Scale: NOT TO SCALE

No.	Revision	By	Date

Designed by:

VHB Vanasse Hangen Brustlin, Inc.

CONSULTANT PROJECT MANAGER: T. Bryant

	By	Date		By	Date
Designed	GME	12/14	Checked	LSC	12/14
Drawn	CMD	12/14	In Charge of	TSB	12/14

VANASSE HANGEN BRUSTLIN, INC.
500 Southborough Dr.
Suite 105B
South Portland, ME 04106
TEL (207) 889-3150
FAX (207) 253-5596

MAINE TURNPIKE

THE GOLD STAR MEMORIAL HIGHWAY

MTA PROJECT MANAGER: Ralph Norwood

SUPERSTRUCTURE REPLACEMENT
LUNT'S HILL ROAD UNDERPASS

AS-BUILTS AND STANDARD DETAILS

VHB: 55041.00
CONTRACT: 2015.10

SHEET NUMBER: 72

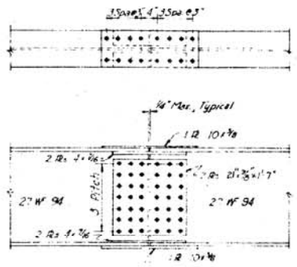

SPLICE 27-1

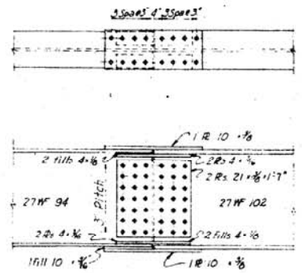

SPLICE 27-2

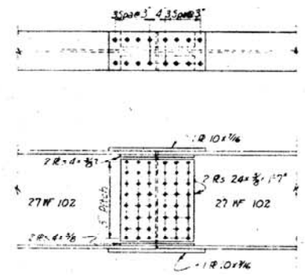

SPLICE 27-3

IDENTIFICATION AND WEIGHT IN POUNDS OF 27 WF BEAM SPLICES												
LIGHTER BEAM	SPLICE NO. AND HEAVIER BEAM SIZE											
	NO. 177		NO. 160		NO. 145		NO. 114		NO. 102		NO. 94	
94									27-2	220	27-1	205
102									27-3	225		
114												
145												
160												
177												

CAPACITY OF SPLICES		
BEAM	MOMENT IN KIPS	SHEAR KIPS
94	2640	103
102	2830	109
114		
145		
160		
177		

Note: Type "A" Splices are designed for 75% of the capacity of the smaller of the two beams being spliced together, with 2 holes out of each flange and 7 holes out of the web. The simultaneous shear capacities are as tabulated and are in all cases equal to or greater than 75% of the shear capacity of the lighter web.

All rivets are 7/8" ϕ, holes 15/16".

Web splice plates shall have horizontal rolled or mill sheared edges.

Vertical edges may be shop sheared or flame cut.

	BY	DATE				
MADE	LLD	9-23-53				
TRACED						
CHECKED	HJG	10-6-53	1	Checking Revisions	HJG	10-13-53
IN CHARGE OF	J.D.S.K.		No	REVISION	BY	DATE

MAINE TURNPIKE AUTHORITY

MAINE TURNPIKE

SECTION 2-- PORTLAND TO AUGUSTA

STANDARD
TYPE "A" SPLICES FOR 27 WF BEAMS

HOWARD, NEEDLES, TAMMEN & BERGENDOFF
CONSULTING ENGINEERS
NEW YORK KANSAS CITY

SCALE: 3/4" = 1'-0"
CONTRACT NO. 212
SHEET NO. 37 OF 41

STANDARD DRAWING NO. 7

Date:12/12/2014

Filename: ...\st\planset\073_asbuilt_09.dgn

Scale: NOT TO SCALE

No.	Revision	By	Date

Designed by:

VHB Vanasse Hangen Brustlin, Inc.

CONSULTANT PROJECT MANAGER: T. Bryant

	By	Date		By	Date
Designed	GME	12/14	Checked	LSC	12/14
Drawn	CMD	12/14	In Charge of	TSB	12/14

VANASSE HANGEN BRUSTLIN, INC.
500 Southborough Dr.
Suite 105B
South Portland, ME 04106
TEL (207) 889-3150
FAX (207) 253-5596

MAINE TURNPIKE

THE GOLD STAR MEMORIAL HIGHWAY

MTA PROJECT MANAGER: Ralph Norwood

SUPERSTRUCTURE REPLACEMENT
LUNT'S HILL ROAD UNDERPASS

AS-BUILTS AND STANDARD DETAILS

VHB: 55041.00
CONTRACT: 2015.10

SHEET NUMBER: 73
73 OF 76

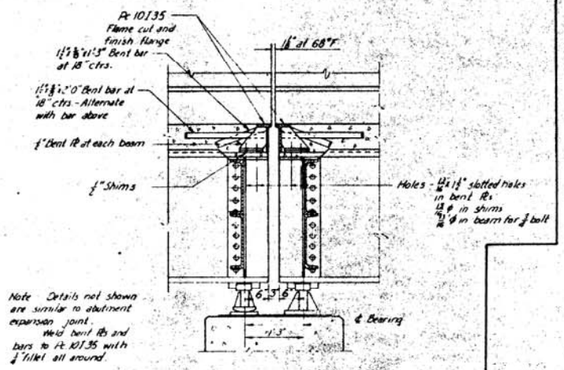

TYPE "Y" JOINT AT PIERS

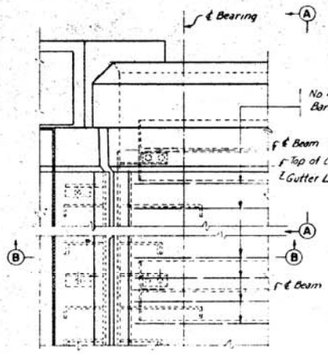

PART PLAN AT ABUTMENT

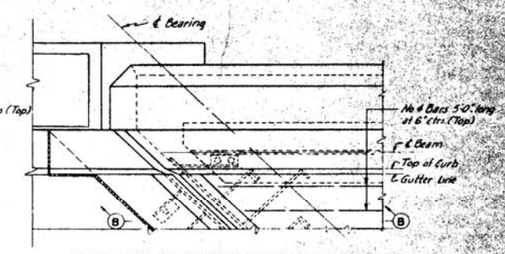

PART PLAN AT ABUTMENT FOR SKEWED STRUCTURES

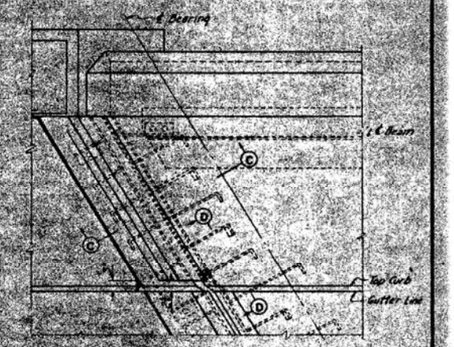

PART PLAN - SIDEWALK JOINT AT ABUTMENT
(To be used for widths greater than 1'-6")

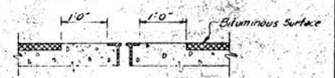

PART SECTION THROUGH "Y" JOINT-
STRUCTURES WITH BITUMINOUS SURFACING

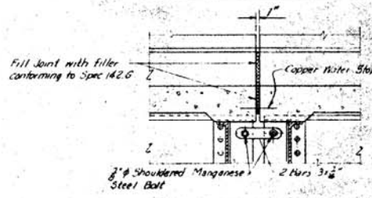

TYPE "X" DEFLECTION JOINT AT PIERS
Used only when expanding length is less than 50' and when skew is less than 20°

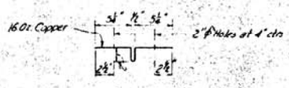

COPPER WATER STOP
(No Scale)

NOT APPLICABLE

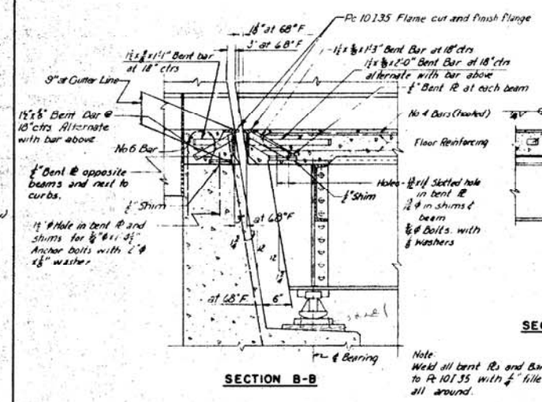

SECTION B-B

Note
Weld all bent Pls and Bars to Pl 10135 with ¼" fillet all around.

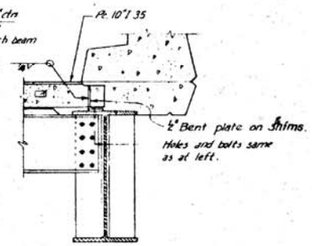

SECTION A-A

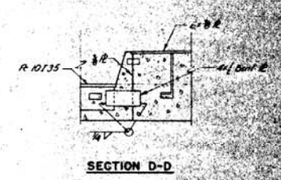

SECTION D-D

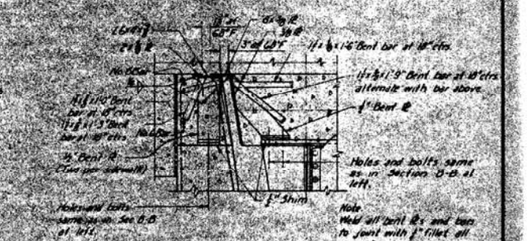

SECTION C-C

TYPE "Y" ARMORED JOINT
Use when expanding length is greater than 50' and less than 100'

Note: Steel fabricator shall furnish details of anchor bolt layout to the Substructure Contractor.

	BY	DATE
MADE	WBC	
TRACED		
CHECKED	FSJr	12-8-53
IN CHARGE OF	IDSM	

No	REVISION	BY	DATE
5	As-Built	WBM	11-7-56
4	Revised transition of type [illegible]	RLE	3-11-54
3	Revised bolt & expansion [illegible]	HCH	1-19-54
2	Moved 1½" dim @ Sct line to Bent of ℄	FS	12-18-53
1	Redrawn	HJG	11-20-53

MAINE TURNPIKE AUTHORITY
MAINE TURNPIKE
SECTION 2— PORTLAND TO AUGUSTA

TYPE "X" AND "Y" EXPANSION JOINTS
EXPANDING LENGTH TO 100 FEET

HOWARD, NEEDLES, TAMMEN & BERGENDOFF
CONSULTING ENGINEERS
NEW YORK KANSAS CITY

SCALE: ¾"=1'0"
CONTRACT NO. _____
SHEET NO. 16 OF 302

STANDARD DRAWING NO. 11A

Date:12/12/2014

Filename: ...\st\planset\074_asbuilt_10.dgn

Scale: NOT TO SCALE

No.	Revision	By	Date

Designed by:

Vanasse Hangen Brustlin, Inc.

CONSULTANT PROJECT MANAGER: T. Bryant

	By	Date		By	Date
Designed	GME	12/14	Checked	LSC	12/14
Drawn	CMD	12/14	In Charge of	TSB	12/14

VANASSE HANGEN BRUSTLIN, INC.
500 Southborough Dr.
Suite 105B
South Portland, ME 04106
TEL (207) 889-3150
FAX (207) 253-5596

MAINE TURNPIKE

THE GOLD STAR MEMORIAL HIGHWAY

MTA PROJECT MANAGER: Ralph Norwood

SUPERSTRUCTURE REPLACEMENT
LUNT'S HILL ROAD UNDERPASS

AS-BUILTS AND STANDARD DETAILS

VHB: 55041.00
CONTRACT: 2015.10

SHEET NUMBER: 74
74 OF 76

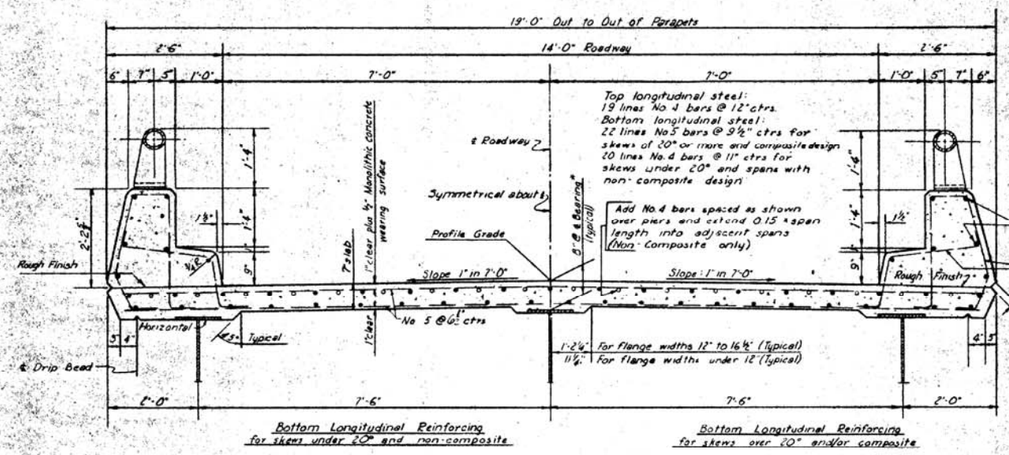

14'-0" ROADWAY

Note: Top of parapet slopes ½" to inside
All chamfers are 1"

All longitudinal bars in curb and parapet shall be No.4 bars spaced as shown and discontinuous at deflection joints.

No.4 bars @ 12" ctrs

Joint to be finished with a 3/8" edging tool, filled with hot poured joint sealing filler. See section 4.2.6 of the General Specifications.

BRIDGE FLOOR CONSTRUCTION JOINT DETAIL

Scale: 1½" = 1'-0"

Note: For additional longitudinal reinforcement see plans for composite design deflection joint.

For additional transverse reinforcement adjacent to joint see deflection joint detail No. 11

* The depth of concrete over the top of beams shall be varied as necessary to obtain the uniform thickness between haunches and overhang for the concrete roadways, of floor, curbs, and parapets with allowance for camber after deflection, permanent dead load.

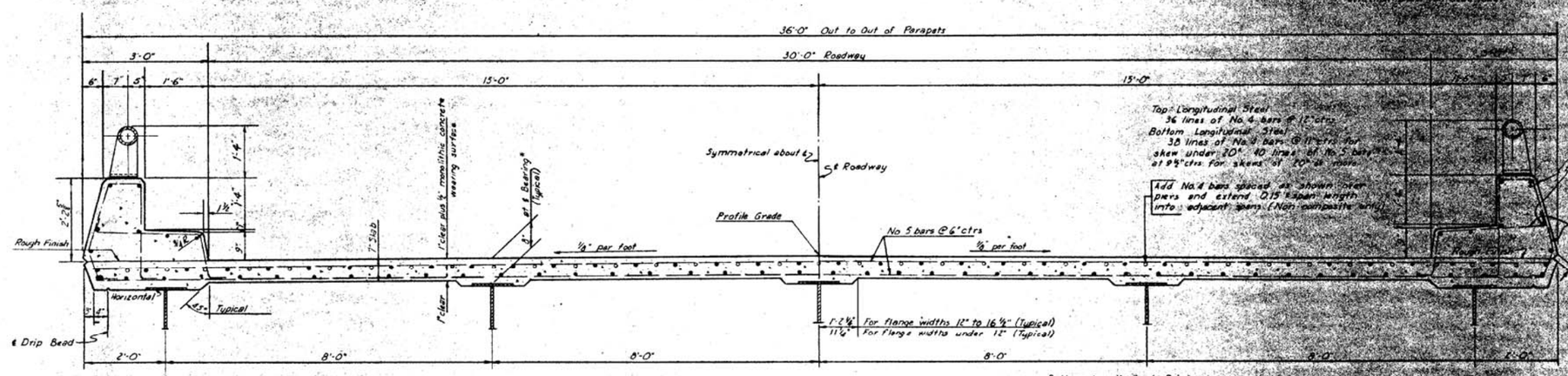

30'-0" ROADWAY

Note: Top of parapet slopes ½" to inside
All chamfers are 1"

All longitudinal bars in curb and parapet shall be #4 bars spaced as shown and discontinuous at deflection joints.

No.4 bars @ 12" ctrs

Note: Cross sections of bridges on curves or superelevation are to be altered as shown on individual bridge drawings.

			8	As-Built	HBH 1-18-56
			7	Curb & Parapet reinforcing sheet	RER 9-24-53
			6	Added *Note	WCM 9-18-53
			5	Lowered Parapet	WCM 9-11-53
	BY	DATE	4	Redrawn	BK 8-21-53
MADE	WCM	8-11-53	3	Longitudinal bars over piers	RS 8-18-53
TRACED			2	Interchange deck	TKC 7-23-53
CHECKED	TKC	11-4-53	1	General	LLD 7-13-53
IN CHARGE OF	I.D.S.K.		No	REVISION	BY DATE

MAINE TURNPIKE AUTHORITY
MAINE TURNPIKE
SECTION 2— PORTLAND TO AUGUSTA
STANDARD BRIDGE FLOOR CROSS SECTIONS
14'-0" AND 30'-0" ROADWAY
HOWARD, NEEDLES, TAMMEN & BERGENDOFF
CONSULTING ENGINEERS
NEW YORK KANSAS CITY
SCALE: ¼" = 1'-0"
CONTRACT NO.
SHEET NO. 12 OF 32
STANDARD DRAWING NO. 13

Date:12/12/2014

Filename: ...\st\planset\075_asbuilt_11.dgn

Scale: NOT TO SCALE

No.	Revision	By	Date

Designed by:

VHB Vanasse Hangen Brustlin, Inc.

CONSULTANT PROJECT MANAGER: T. Bryant

	By	Date		By	Date
Designed	GME	12/14	Checked	LSC	12/14
Drawn	CMD	12/14	In Charge of	TSB	12/14

VANASSE HANGEN BRUSTLIN, INC.
500 Southborough Dr.
Suite 105B
South Portland, ME 04106
TEL (207) 889-3150
FAX (207) 253-5596

MAINE TURNPIKE

THE GOLD STAR MEMORIAL HIGHWAY

MTA PROJECT MANAGER: Ralph Norwood

SUPERSTRUCTURE REPLACEMENT
LUNT'S HILL ROAD UNDERPASS

AS-BUILTS AND STANDARD DETAILS

VHB: 55041.00
CONTRACT: 2015.10

SHEET NUMBER: 75
75 OF 76

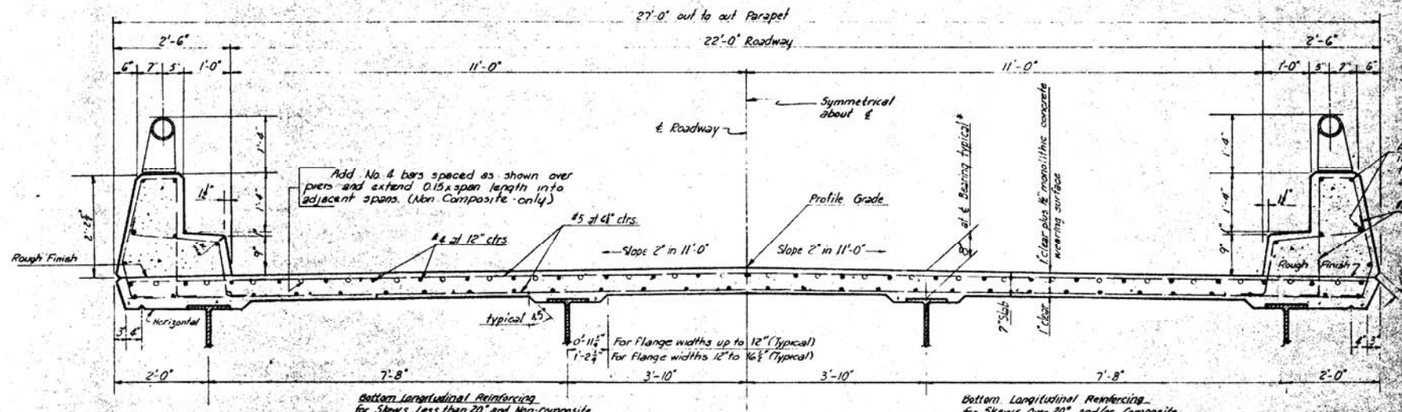

22'-0" ROADWAY

Note:
Top of parapet slope: ¼" to inside.
All chamfers are 1".

All longitudinal bars in curb and parapet to be #4 bars spaced as shown and discontinuous at deflection joints.

#4 at 1'-9" ctrs

Reinforcing for 22'-0" Roadway:
Transverse Steel:
#5 bars at 12" ctrs. top and bottom.
Top longitudinal steel:
2-5 lines of #4 bars at 12" ctrs.
Bottom longitudinal steel:
2-5 lines of #5 bars at 7½" ctrs. for skews of 20° or more and approaches with composite design.
2-5 lines of #4 bars at 11" ctrs. for skews under 20° and spans with non-composite design.

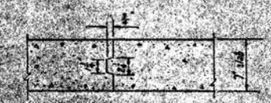

Note: Joint to be finished with a ¼" radius reel. Fill with hot poured joint sealing filler. See section 14.12.02 of the General Specifications.

BRIDGE FLOOR CONSTRUCTION JOINT DETAIL
Scale: 1½"=1'-0"

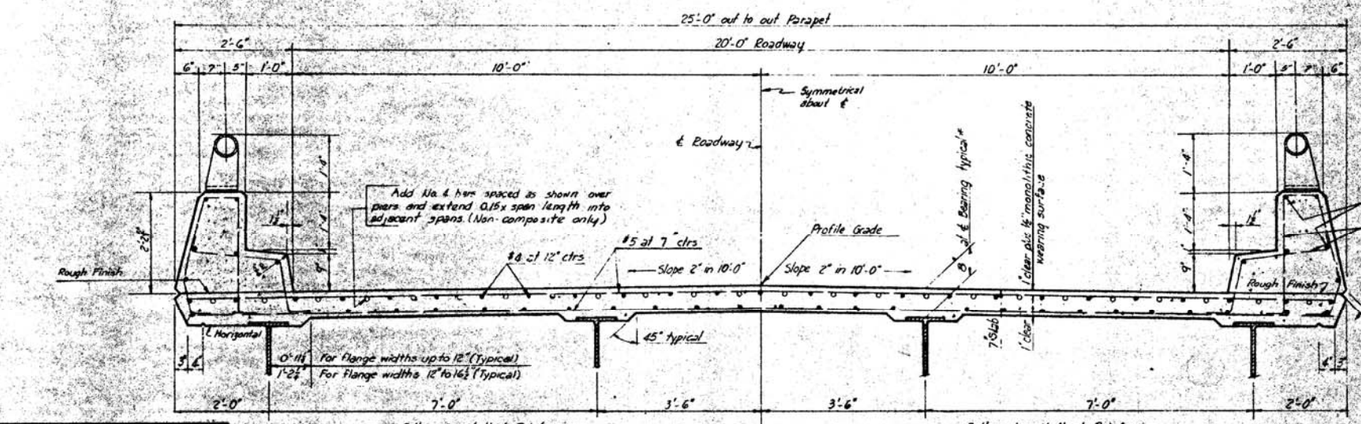

20'-0" ROADWAY

Note:
Top of parapet slope: ¼" to inside.
All chamfers are 1".

All longitudinal bars in curb and parapet shall be #4 bars spaced as shown and discontinuous at deflection joints.
#4 at 16" ctrs

Reinforcing for 20'-0" Roadway:
Transverse Steel:
#5 bars at 12" ctrs. top and bottom.
Top longitudinal steel:
2-5 lines of #4 bars at 12" ctrs.
Bottom longitudinal steel:
2-5 lines of #5 bars at 7½" ctrs. for skews of 20° or more and approaches with composite design.
2-5 lines of #4 bars at 11" ctrs. for skews under 20° and spans with non-composite design.

	BY	DATE	No.	REVISION	BY	DATE
MADE	TKC	8-8-53	4.	Lowered Parapet	WCH	8-11-53
TRACED			3.	Longit. Bars Over Piers	F.S.Jr.	10-15-53
CHECKED	F.S.Jr.	12-4-54	2.	Reinforcing	B.K.	10-8-53
IN CHARGE OF	105K		1.	Transverse Slope	J.L.D.	9-4-53
			6.	Date of Percent reinforcing sheet		
			5.	Added "Note"	W.C.H.	10-8-53
			7.	As-Built	H.B.H.	1-18-56
					A.G.K.	7-24-09

MAINE TURNPIKE AUTHORITY
MAINE TURNPIKE
SECTION 2 - PORTLAND TO AUGUSTA
STANDARD BRIDGE FLOOR CROSS SECTIONS
22'-0" & 22'-0" ROADWAYS
HOWARD, NEEDLES, TAMMEN & BERGENDOFF
CONSULTING ENGINEERS
NEW YORK KANSAS CITY
SCALE 3/8"=1'-0"
CONTRACT NO.
SHEET NO. 12 OF 32

STANDARD DRAWING NO. 14

Date:12/12/2014

Filename: ...\st\planset\076_asbuilt_12.dgn

Scale: NOT TO SCALE

No.	Revision	By	Date

Designed by:

Vanasse Hangen Brustlin, Inc.

CONSULTANT PROJECT MANAGER: T. Bryant

	By	Date		By	Date
Designed	GME	12/14	Checked	LSC	12/14
Drawn	CMD	12/14	In Charge of	TSB	12/14

VANASSE HANGEN BRUSTLIN, INC.
500 Southborough Dr.
Suite 105B
South Portland, ME 04106
TEL (207) 889-3150
FAX (207) 253-5596

MAINE TURNPIKE

THE GOLD STAR MEMORIAL HIGHWAY

MTA PROJECT MANAGER: Ralph Norwood

SUPERSTRUCTURE REPLACEMENT
LUNT'S HILL ROAD UNDERPASS

AS-BUILTS AND STANDARD DETAILS

VHB: 55041.00
CONTRACT: 2015.10

SHEET NUMBER: 76
76 OF 76