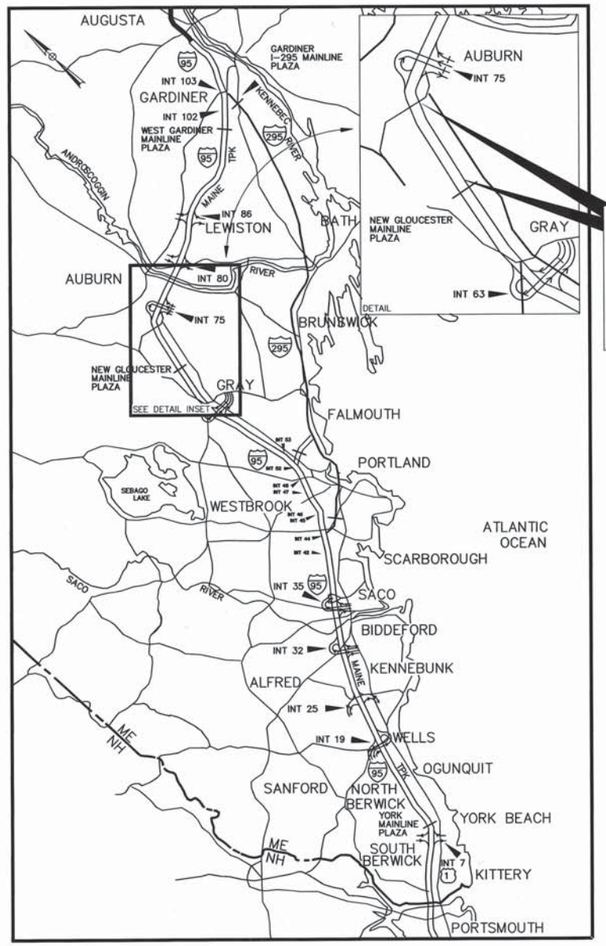

CONTRACT 2015.02
PAVEMENT REHABILITATION
CLEAR ZONE IMPROVEMENTS
MM 67.1 TO MM 74.9

ROYAL RIVER BRIDGE REPAIRS
MM 71.1
BALD HILL BRIDGE REPAIRS
MM 71.6

LOCATION MAP

MAINE TURNPIKE

THE GOLD STAR
MEMORIAL HIGHWAY

MAINE TURNPIKE AUTHORITY

DANIEL E. WATHEN, CHAIR
JAMES F. CLOUTIER, VICE CHAIR
GERARD P. CONLEY, SR., MEMBER
JOHN E. DORITY, MEMBER
ROBERT D. STONE, MEMBER
FREEMAN R. GOODRICH, MEMBER
KAREN S. DOYLE, MEMBER EX-OFFICIO

S. PETER MILLS, EXECUTIVE DIRECTOR

INDEX OF SHEETS

SHEET NO.	SHEET NO.	DESCRIPTION
1		TITLE SHEET
2	C-1	ESTIMATED QUANTITIES
3	C-2	DRAINAGE SUMMARY
4	P-1	TYPICAL SECTIONS
5	P-2	DRAINAGE DETAILS
6-7	P-3-4	MISCELLANEOUS DETAILS
8-12	T-1-5	TRAFFIC CONTROL
13	T-6	MAINTENANCE OF TRAFFIC
14-15	T-7-8	MAINTENANCE OF TRAFFIC SIGN SUMMARY
16	T-9	PAVEMENT MARKING DETAILS I
17	G-1	GUARDRAIL GENERAL NOTES AND DETAILS
18	G-2	GUARDRAIL TAPER DETAILS
19	G-3	GUARDRAIL BRIDGE TRANSITION DETAILS
20	G-4	GUARDRAIL BRIDGE TRANSITION DETAILS
21	G-5	GUARDRAIL MEDIAN SCHEDULE
22	G-6	GUARDRAIL OUTSIDE SHOULDER SCHEDULE- NB
23	G-7	GUARDRAIL OUTSIDE SHOULDER SCHEDULE -SB
24	TP-1	TREE PLANTINGS
25	QT-01	QUANTITIES & GENERAL NOTES
26	LD-01	LIMIT OF DISTURBANCE
27	S-01	DECK PLAN & TYPICAL SECTION
28	S-02	DECK PLAN & TYPICAL SECTION
29	S-03	JOINT REPAIR DETAILS
30	S-04	JOINT REPAIR DETAILS
31-34	S-05-08	ABUTMENT REPAIRS
35-38	S-09-12	PIER REPAIRS
39-40	MD-01-02	MISCELLANEOUS DETAILS
41-43	MT-01-03	MAINTENANCE OF TRAFFIC
44	MT-04	LOCAL ROAD AND WIDE LOAD SIGNING
45	MT-05	MAINTENANCE OF TRAFFIC SIGN SUMMARY
46-57	AB-01-012	EXISTING AS-BUILTS

T·Y·LIN INTERNATIONAL

STATE OF MAINE — Norman L. Baker 4801 LICENSED PROFESSIONAL ENGINEER

SHEETS 25-57 — Norman L. Baker — 3/23/15
NORMAN L. BAKER, PE
CONSULTANT PROJECT MANAGER
DATE

STATE OF MAINE — JOSEPH RYAN LEAVITT No. 9593 LICENSED PROFESSIONAL ENGINEER

MAINE TURNPIKE

SHEETS 2-15 — Joseph Ryan Leavitt — 3/25/15
JOSEPH RYAN LEAVITT, P.E.
SENIOR RESIDENT ENGINEER
DATE

STATE OF MAINE — BRIAN A. TADDEO No. 12010 LICENSED PROFESSIONAL ENGINEER

MAINE TURNPIKE

SHEETS 16-24 — Brian A Taddeo — 3/25/15
BRIAN A. TADDEO, P.E.
PROJECT ENGINEER
DATE

CONTRACT 2015.02

APPROVED:
MAINE TURNPIKE AUTHORITY

Peter S. Merfeld — 3-23-15
PETER S. MERFELD, P.E. – CHIEF OPERATIONS OFFICER
DATE

Stephen R. Tartre — 3/25/15
STEPHEN R. TARTRE, P.E., – DIRECTOR OF ENGINEERING & BUILDING MAINTENANCE
DATE

ESTIMATED QUANTITIES										
ITEM NO.	DESCRIPTION	UNIT	Mill & Fill Loc. 1 NB	Mill & Fill Loc. 2 SB	Clear Zone Loc. 3 NB	Clear Zone Loc. 4 SB	Bridge Loc. 5	Bridge Loc. 6	Tree Plantings Loc. 7	Quantity Total
202.202	Removing Pavement Surface - Mainline	SY	102356	102356						204,712
202.2021	Removing Partial Pavement Surface - Bridge Deck	SY					270	720		990
202.2026	Removing Pavement Surface - Drainage Paths	SF	3168	3168						6,336
202.205	Rumble Strips	EA	32900	32900						65,800
202.206	Removing Rumble Strips	LF					1440	2520		3,960
203.20	Common Excavation	CY			100					100
203.241	Common Borrow, Truck Measure	CY			150					150
205.51	Widening of Existing Shoulder	LF			340	120				460
403.2083	Hot Mix Asphalt, 12.5mm (Polymer Modified)- RAP	Ton	8598	8598						17,196
403.2084	Hot Mix Asphalt, 12.5mm (Polymer Modified)- Bridge	Ton					53	122		175
403.211	Hot Mix Asphalt, (shimming)	Ton	2866	2866						5,732
409.15	Bituminous Tack Coat - Applied	GAL	6141	6141						12,282
409.151	Bituminous Tack Coat - Applied, Bridge	GAL					27	36		63
411.09	Untreated Agrigate Surface Coarse	CY						20		20
424.323	Asphalt Rubber Fiber Crack Filler-Applied	Pound	3500	3500						7,000
502.701	Bridge Drain Grate Modification	EA						4		4
506.9104	Zinc-rich Coating System (Field Painting)	LS					0.5	0.5		1
508.141	High Performance Waterproofing Membrane (Bald Hill Road)(720 SY)	LS						1		1
508.142	High Performance Waterproofing Membrane (Royal River)(270 SY)	LS					1			1
515.201	Pigmented Protective Coating for Concrete Surfaces	SY						330		330
515.202	Clear Protective Coating for Concrete Surfaces	SY					400	440		840
518.10	Abutment Repairs	SF					30	30		60
518.20	Pier Repairs	SF						40		40
518.39	Granite Curb Joint Mortar and Bedding Mortar Repair	LF						390		390
518.6317	Epoxy Injected Crack Repairs	LF						15		15
518.75	Fascia and Overhang Repairs	SF						195		195
518.80	Partial Depth Concrete Deck Repairs	SF					125	520		645
518.81	Full Depth Concrete Deck Repairs	SF						130		130
518.87	Concrete Edge Beam Repair (Full Depth)	SF						85		85
520.2211	Expansion Device Modifications(Royal River)	EA					2			2
520.23	Expansion Device - Asphaltic Plug Joint	LF						150		150
520.231	Expansion Device - Asphaltic Plug for Crack Control	LF					85			85
527.30	Energy Absorbing System (CAT) - New	EA			2					2
526.306	Temporary Concrete Barrier, Type I - Supplied by Authority (1000 LF)	LS					0.4	0.6		1
527.341	Work Zone Crash Cushion - TL-3	Unit					1	2		3
603.91	Pressure Treated Wood Drain Trough	LF						120		120
604.184	Rebuild Catch Basin to Grade - Type II	EA	10	10						20
606.1725	Bridge Transition - Type III Modified	EA			4					4
606.178	Guardrail Beam	LF			725					725
606.24	Guardrail Type 3d Single Rail	LF			1,050					1,050
606.2652	Terminal End - Remove and Stack	EA			47					47
606.278	Terminal End - Anchored End	EA			45					45
606.352	Reflectorized Beam Guardrail Delineator	EA			1600		36	133		1,769
606.353	Delineator Post	EA			130					130
606.355	Delineator Post - Remove and Stack	EA			128					128
606.3605	Remove, Modify and Reset Single Guardrail	LF			225					225
606.3621	Guardrail Adjust - Single Rail	LF			14,450					14,450
606.3622	Guardrail Adjust - Double Rail	LF			39,925					39,925
606.3631	Guardrail - Remove and Dispose	LF			175					175
606.47	Single Wooden Post	EA			10					10
606.471	Single Offset Block - W Beam	EA			121					121
606.48	Single Galvanized Steel Post	EA			40					40
606.701	Asymmetrical Thrie Beam Transition	EA			9					9
606.754	Widen Shoulder for Guardrail 350 Flared Terminal	EA			8					8
607.755	Modify Widen Shoulder for Guardrail 350 Flared Terminal	EA			19					19
606.80	Guardrail - 350 Fleat Terminal	EA			5					5
606.82	Guardrail - Remove and Stack Existing Crash End	EA			3					3
606.83	Remove, Modify and Reset Guardrail 350 Flared Terminal	EA			3					3
607.091	Woven Wire Fence - Metal Posts with Bracing	LF			12000	9700				21,700

ESTIMATED QUANTITIES										
ITEM NO.	DESCRIPTION	UNIT	Mill & Fill Loc. 1 NB	Mill & Fill Loc. 2 SB	Clear Zone Loc. 3 NB	Clear Zone Loc. 4 SB	Bridge Loc. 5	Bridge Loc. 6	Tree Plantings Loc. 7	Quantity Total
609.191	Concrete Curbing Type 2	LF			24	24				48
610.18	Stone Ditch Protection	CY						12		12
613.319	Erosion Control Blanket	SY			1000					1,000
615.07	Loam	CY						1		1
618.1401	Seeding Method Number 2, Plan Quantity	UNIT					1			1
619.1201	Mulch, Plan Quantity	UNIT						30		30
619.1202	Temporary Mulch	LS					0.5	0.5		1
620.58	Erosion Control Geotextile	SY						37		37
621.81	Black Spruce Plantings	EA							125	125
626.12	Quazite Junction Box	EA						3		3
626.22	Non Metallic Conduit	LF						300		300
627.712	White or Yellow Pavement Marking Line	LF	65,800	65,800						131,600
627.713	Broken White Pavement Marking Line	LF	32,900	32,900						65,800
627.761	Temporary Pavement Marking Line, Yellow or White	LF	197,400	197,400			6,429	12,857		414,086
627.77	Removing Existing Pavement Markings	SF					1,200	2,308		3,508
627.812	Temporary Raised Pavement Markers	EA	9,053	9,053						18,106
627.94	Pavement Marking Tape	LF	2,467.5	2,467.5						4,935
629.05	Hand Labor, Straight Time	HR	80				40	80		200
631.10	Air Compressor (including operator)	HR	50							50
631.11	Air Tool (including operator)	HR	80							80
631.12	All Purpose Excavator (including operator)	HR	20							20
631.172	Truck - Large (including operator)	HR	20							20
631.36	Foreman	HR	40							40
652.30	Flashing Arrow	EA	2				1	2		5
652.312	Type III Barricades	EA					2	4		6
652.3311	Drum - Mill and Fill	LS	0.9				0.05	0.05		1
652.34	Cone	EA						15		15
652.35	Construction Signs	SF	5,115							5,115
652.351	Construction Signs - Bridge	SF					400	1,460		1,860
652.3611	Maintenance of Traffic Control Devices, Mill and Fill	LS	1							1
652.38	Flagger	HR						320		320
652.3911	Maintenance of Traffic Control Devices (Bald Hill Rd)	LS						1		1
652.3912	Maintenance of Traffic Control Devices (Royal River)	LS					1			1
652.411	Portable - Changeable Message Sign with Radar Unit	EA	4							4
652.45	Truck Mounted Attenuator	CD	60				20	20		100
656.50	Baled Hay, in place	EA	75							75
656.632	30 inch Temporary Silt Fence	LF	300					50		350
830.25	Horrizontal Directional Drilling, 3" PVC Conduit Installation	LF						300		300

GENERAL NOTES

1. THE CONTRACTOR IS REQUIRED TO CALL DIF SAFE AT 1-888-344-7233 AT LEAST 72 HOURS PRIOR TO START OF WORK.

2. THE CONTRACTOR SHALL NOTIFY THE RESIDENT 10 DAYS PRIOR TO CONSTRUCTION SO THE RESIDENT CAN ARRANGE FOR MAINE TURNPIKE UNDERGROUND UTILITY LOCATION. ALL PROPOSED SIGN LOCATIONS AND EXCAVATION LOCATIONS SHALL BE MARKED AT THE NOTIFICATION TIME. EXCAVATING WILL NOT BE PERMITTED UNTIL THE AUTHORITY HAS LOCATED AND MARKED ITS' UNDERGROUND UTILITIES IN THE MARKED AREAS.

   THE AUTHORITY HAS PROGRAMMED TWO FIELD VISITS FOR MAINE TURNPIKE UTILITY COORDINATION ON THIS PROJECT. SHOULD THE CONTRACTOR NEED ADDITIONAL SIGN LOCATIONS AND/OR ADDITIONAL EXCAVATION LOCATIONS MARKED, OR SHOULD THE CONTRACTOR FAIL TO MAINTAIN THE AUTHORITY'S PREVIOUSLY ESTABLISHED DIF SAFE MARKS, THE AUTHORITY SHALL DEDUCT THE ADDED MARKING COSTS FROM THE CONTRACTOR'S PAYMENT.

3. EXCAVATIONS ACCOMPLISHED AS PART OF THIS PROJECT SHALL BE CONSTRUCTED IN ACCORDANCE WITH OSHA SUBPART P OF 29 CFR PART 1926.650-652 (CONSTRUCTION STANDARDS FOR EXCAVATIONS).

4. ALL STANDARD DETAILS SHALL BE IN CONFORMANCE WITH MAINE DEPARTMENT OF TRANSPORTATION (MAINE DOT) STANDARD DETAILS HIGHWAY AND BRIDGES 2002 LATEST REVISIONS AND MAINE DOT BEST MANAGEMENT PRACTICES FOR EROSION AND SEDIMENT CONTROL LATEST REVISION UNLESS OTHERWISE INCLUDED IN THESE PLANS.

DRAINAGE NOTES

1. NO EXISTING DRAINAGE SHALL BE ABANDONED, REMOVED OR PLUGGED WITHOUT APPROVAL OF THE RESIDENT.

EROSION CONTROL

1. ADDITIONAL MEASURES MAY BE PROPOSED BY THE CONTRACTOR DUE TO SITE OR WEATHER CONDITIONS. THE RESIDENT MAY DIRECT THE CONTRACTOR TO IMPLEMENT ADDITIONAL MEASURES, ANY ADDITIONAL MEASURES APPROVED BY THE RESIDENT WILL BE MEASURED FOR PAYMENT.

2. ALL TEMPORARY EROSION CONTROL DEVICES SHALL BE INSTALLED IN ACCORDANCE WITH THE MAINE DEPART OF TRANSPORTATION BEST MANAGEMENT PRACTICES.

Scale: NOT TO SCALE

No.	Revision	By	Date

Designed by:

	By	Date		By	Date
Designed	JRL	01/08/2015	Checked	GJO	01/08/2015
Drawn	BMB	01/08/2015	In Charge of	SRT	01/08/2015

MAINE TURNPIKE AUTHORITY
2360 Congress Street
Portland, ME 04102
TEL (207) 871-7771
FAX (207) 879-5567

THE GOLD STAR MEMORIAL HIGHWAY

MTA PROJECT MANAGER: Joseph R. Leavitt, P.E.

PAVEMENT REHABILITATION
CLEAR ZONE IMPROVEMENTS

ESTIMATED QUANTITIES
AND GENERAL NOTES

SHEET NUMBER: C-1

CONTRACT: 2015.02

DRAINAGE SUMMARY INCLUDES LOCATIONS 1 THROUGH LOCATION 2

Location	ITEM NAME	RDWY		BIT. CONC. WATER-WAY Type I	BIT. CONC. WATER-WAY Type II	12" REINFORCED CONCRETE PIPE - CLASS III		REBUILD CATCH BASIN TO GRADE - TYPE II				REBUILD CATCH BASIN TO GRADE - TYPE IV	CATCH BASIN TYPE F3	EROSION CONTROL BLANKET	BALED HAY IN PLACE	30 inch TEMP. SILT FENCE	CATCH BASIN OUTLETS ON RDWY SLOPE	REMARKS
				GL	CIG													
	Item No.			459.06	459.061	603.155		604.184				604.186	604.242	613.319	656.50	656.632		
	Unit			Ea.	Ea.	Lf	LF	Ea.	Ea.	Ea.	Ea.	Ea.		SY	Ea.	LF.		
	Station					9' Lt to 0'	0' to 9' Rt.	45' Lt.	9' Lt.	9' Rt.	45' Rt.	0'						
1	3492+80	NB						1	1	1	1			56	10	20	NB	
1	3551+50	NB						1	1	1	1			56	10	20	NB	
1	3675+04	NB						1	1	1	1							
1	3339+40	NB						1	1	1	1							
1	3773+28	NB						1	1	1	1			56	5	20	NB	
	Location 1,2 TOTALS			**0**	**0**	**0**	**0**	**5**	**5**	**5**	**5**	**0**	**0**	**168**	**25**	**60**		

Scale:

NOT TO SCALE

No.	Revision	By	Date

Designed by:

	By	Date		By	Date
Designed	JRL	01/08/2015	Checked	GJO	01/08/2015
Drawn	BMB	01/08/2015	In Charge of	SRT	01/08/2015

MAINE TURNPIKE AUTHORITY
2360 Congress Street
Portland, ME 04102
TEL (207) 871-7771
FAX (207) 879-5567

THE GOLD STAR MEMORIAL HIGHWAY

MTA PROJECT MANAGER: Joseph R. Leavitt, P.E.

PAVEMENT REHABILITATION
CLEAR ZONE IMPROVEMENTS

DRAINAGE SUMMARY

SHEET NUMBER: C-2

CONTRACT: 2015.02

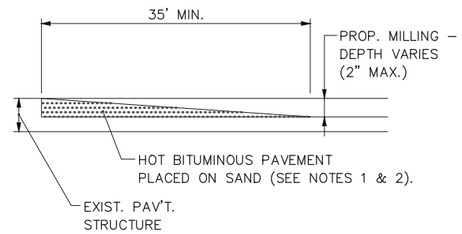

TEMPORARY BITUMINOUS RAMP

N.T.S.

NOTES:

1. HOT MIX ASPHALT FOR TEMPORARY RAMPS WILL NOT BE MEASURED FOR PAYMENT, BUT SHALL BE INCIDENTAL TO HOT MIX ASPHALT 12.5mm.
2. REMOVAL OF TEMP. BITUMINOUS RAMPS WILL NOT BE MEASURED FOR PAYMENT, BUT SHALL BE INCIDENTAL TO HOT MIX ASPHALT 12.5mm.

PAVEMENT LEGEND

Ⓐ = 1 1/2" HOT MIX ASPHALT, 12.5mm NOMIMAL MAXIMUM SIZE

Ⓑ = 1/2" HOT MIX ASPHALT SHIMMING

Ⓒ = MILLING DEPTH VARIES AS CONTROLLED BY CROSS SLOPE

Ⓓ = HOT RUBBERIZED ASPHALT (SS–S1401C) JOINT

Ⓔ = LIMITS OF MILL AND FILL (28'–2")

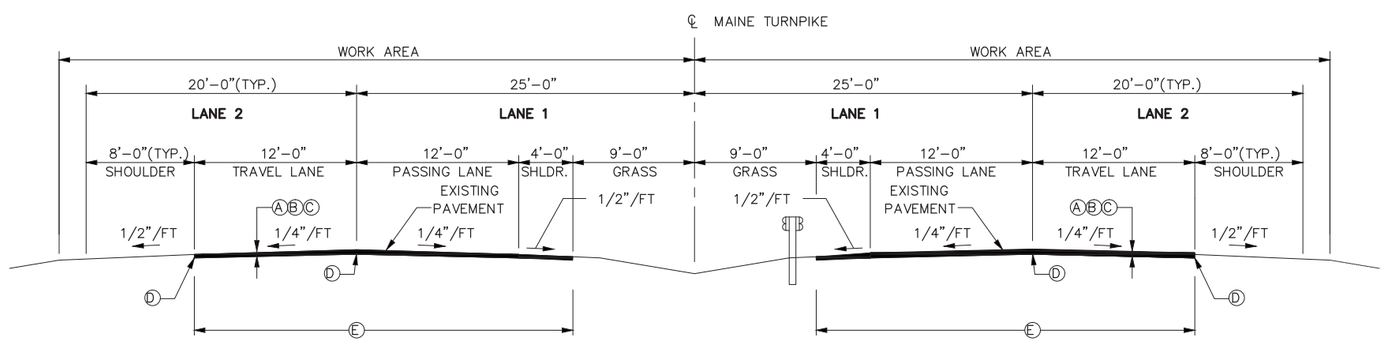

PAVEMENT MILL & FILL
LOCATIONS 1 & 2
MM 68.5 – MM 74.9

NOTES:

1. A COATING OF HOT RUBBERIZED ASPHALT (SS–S–1401C) SHALL BE APPLIED TO ALL TRANSVERSE BUTT JOINTS AND LONGITUDINAL JOINTS.
2. BITUMINOUS TACK COAT IS REQUIRED BETWEEN EXISTING PAVEMENT AND HMA, 12.5 MM, OR SHIM; AND BETWEEN SHIM AND HMA, 12.5 MM.
3. THE ROYAL RIVER BRIDGE APPROACHES SHALL HAVE A 150' TRANSITION OF HOT MIX ASPHALT FULL WIDTH TO ACCOMMODATE THE 1" GRADE CHANGE.
4. THE SOUTH APPROACH ON THE SOUTHBOUND SIDE OF THE ROYAL RIVER SHALL HAVE A 4" MILL AND FILL FOR TWENTY–FIVE FEET. PRIOR TO THE 150' TRANSITION DISCUSSED IN NOTE 3.

Scale: NOT TO SCALE

No.	Revision	By	Date

Designed by:

	By	Date		By	Date
Designed	JRL	01/08/2015	Checked	GJO	01/08/2015
Drawn	BMB	01/08/2015	In Charge of	SRT	01/08/2015

MAINE TURNPIKE AUTHORITY
2360 Congress Street
Portland, ME 04102
TEL (207) 871–7771
FAX (207) 879–5567

THE GOLD STAR MEMORIAL HIGHWAY

MTA PROJECT MANAGER: Joseph R. Leavitt, P.E.

PAVEMENT REHABILITATION
CLEAR ZONE IMPROVEMENTS

TYPICAL SECTIONS
LOCATIONS 1 & 2

SHEET NUMBER: P–1

CONTRACT: 2015.02

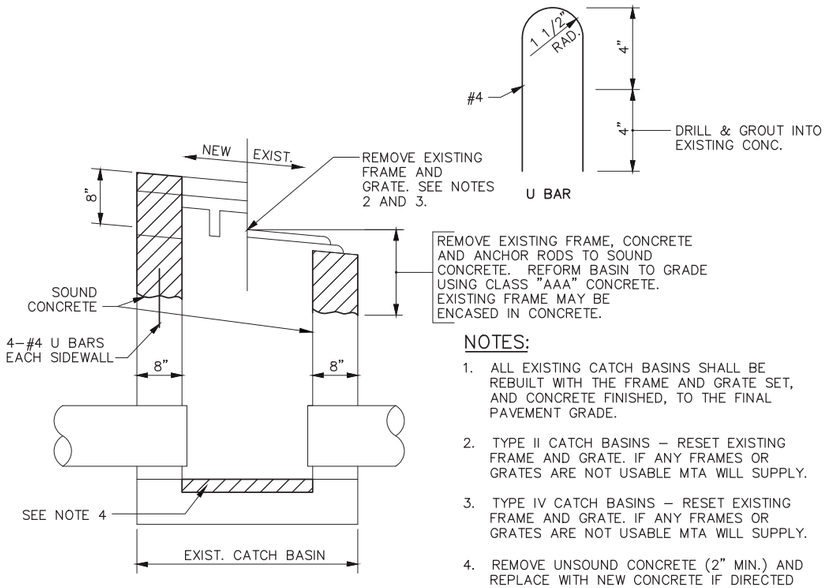

NOTES:

1. ALL EXISTING CATCH BASINS SHALL BE REBUILT WITH THE FRAME AND GRATE SET, AND CONCRETE FINISHED, TO THE FINAL PAVEMENT GRADE.
2. TYPE II CATCH BASINS – RESET EXISTING FRAME AND GRATE. IF ANY FRAMES OR GRATES ARE NOT USABLE MTA WILL SUPPLY.
3. TYPE IV CATCH BASINS – RESET EXISTING FRAME AND GRATE. IF ANY FRAMES OR GRATES ARE NOT USABLE MTA WILL SUPPLY.
4. REMOVE UNSOUND CONCRETE (2" MIN.) AND REPLACE WITH NEW CONCRETE IF DIRECTED BY THE RESIDENT.

REBUILD CATCH BASIN TO GRADE – TYPE IV

N.T.S.

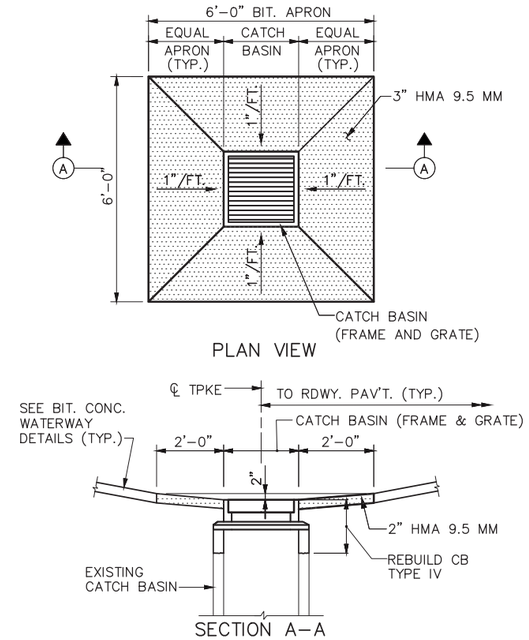

REBUILD CATCH BASIN IN MEDIAN

N.T.S.

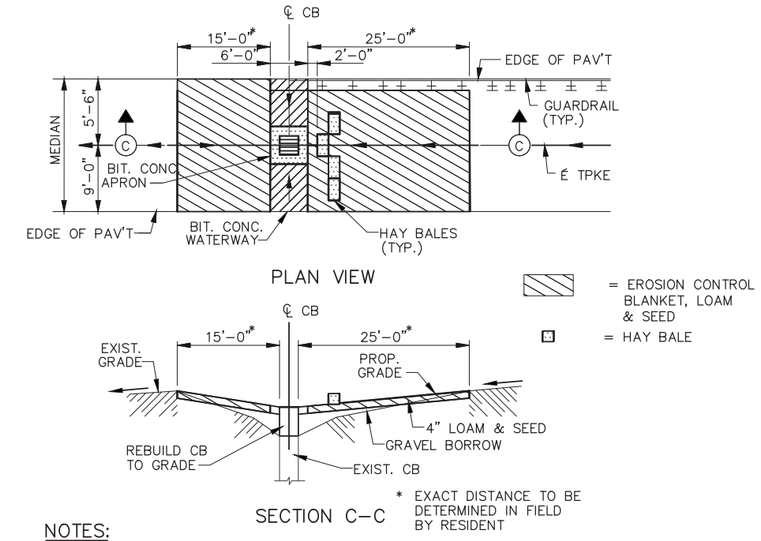

NOTES:

1. INSTALL MINIMUM OF 10 HAY BALES (5 EACH SIDE OF CATCH BASIN) AT LOW POINTS.
2. INSTALL MINIMUM OF 5 HAY BALES UP STREAM OF CATCH BASIN ON GRADE.
3. THE EXACT LOCATION AND NUMBER OF BALES SHALL BE AS DIRECTED BY THE RESIDENT.
4. LOAM AND SEEDING METHOD NUMBER 2 WILL NOT BE MEASURED SEPARATELY FOR PAYMENT, BUT SHALL BE CONSIDERED INCIDENTAL TO ITEMS 459.06 OR 459.061

PROPOSED EROSION CONTROL AT MEDIAN

N.T.S.

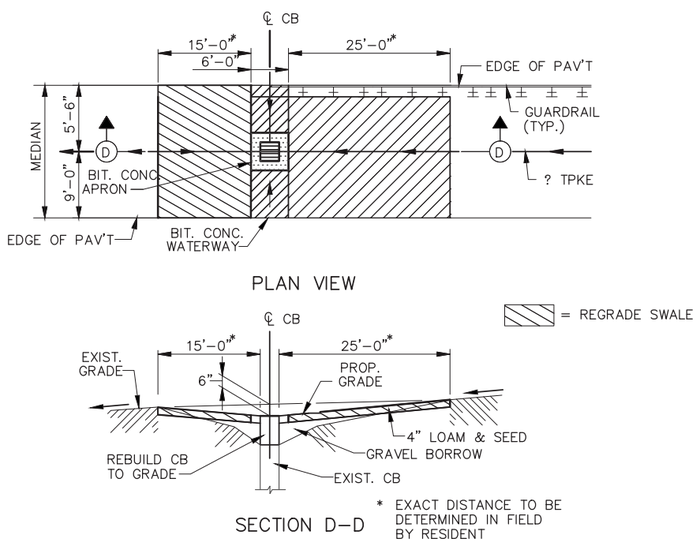

RIM ELEVATION FOR TYPE IV CATCH BASIN

N.T.S.

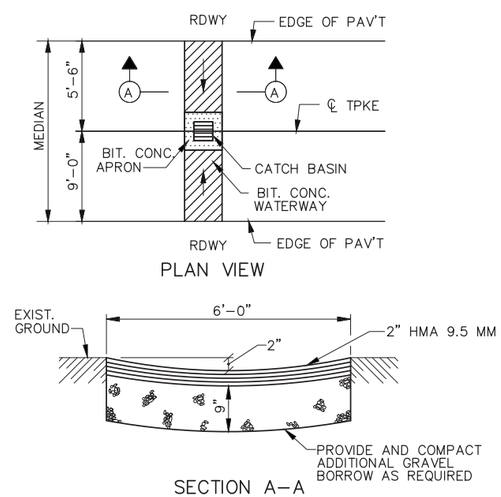

BITUMINOUS CONCRETE WATERWAY, TYPE I

N.T.S.

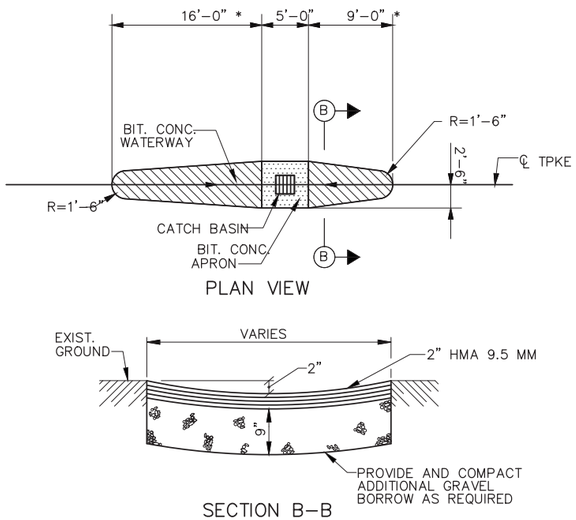

BITUMINOUS CONCRETE WATERWAY, TYPE II

N.T.S.

Scale: NOT TO SCALE

No.	Revision	By	Date

Designed by:

	By	Date		By	Date
Designed	JRL	01/08/2015	Checked	GJO	01/08/2015
Drawn	BMB	01/08/2015	In Charge of	SRT	01/08/2015

MAINE TURNPIKE AUTHORITY
2360 Congress Street
Portland, ME 04102
TEL (207) 871-7771
FAX (207) 879-5567

MAINE TURNPIKE

THE GOLD STAR MEMORIAL HIGHWAY

MTA PROJECT MANAGER: Joseph R. Leavitt, P.E.

PAVEMENT REHABILITATION
CLEAR ZONE IMPROVEMENTS

DRAINAGE DETAILS

SHEET NUMBER: P-2

CONTRACT: 2015.02

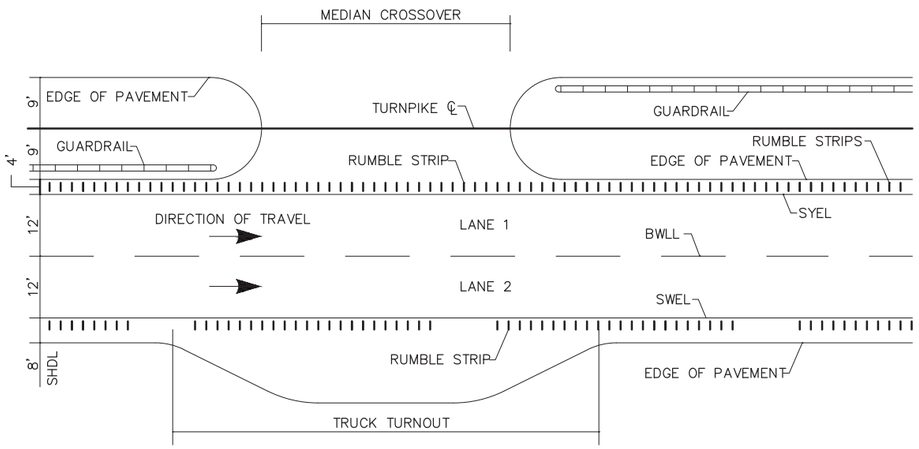

LOCATION OF RUMBLE STRIPS
CROSSOVERS & TRUCK TURNOUTS
N.T.S.

NOTES:

1. INSTALL LANE 2 RUMBLE STRIPS WITH A 20' GAP EVERY 100'. (I.E. 80' OF RUMBLE STRIP AND 20' OF NO RUMBLE STRIP; REPEAT...)
2. LANE 1 RUMBLE STRIPS NEEDED FROM MM 68.5 TO MM 74.9

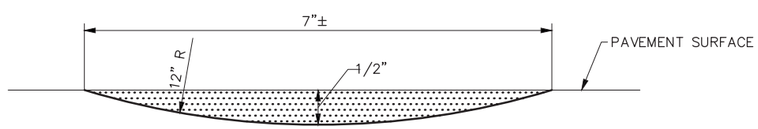

SECTION A–A
N.T.S.

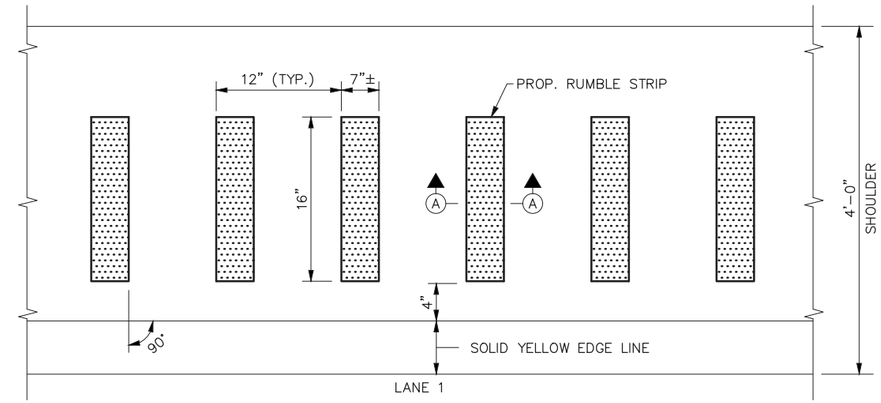

PLAN VIEW – LANE 1
N.T.S.

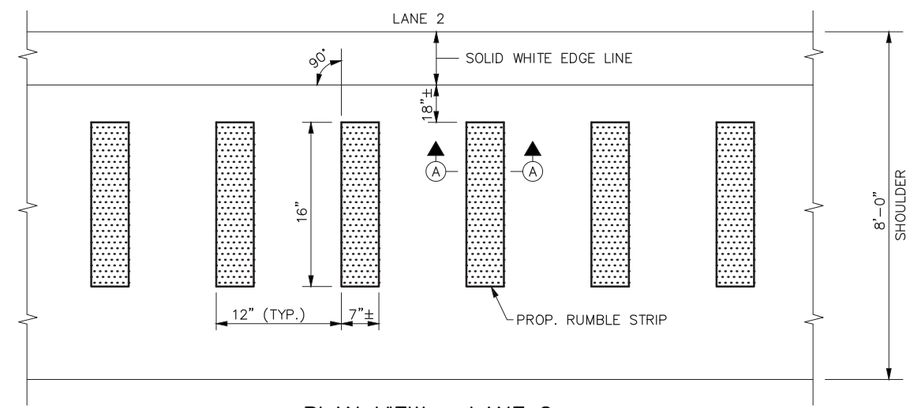

PLAN VIEW – LANE 2
N.T.S.

RUMBLE STRIPS DETAILS

Scale: NOT TO SCALE			
No.	Revision	By	Date

Designed by:

MAINE TURNPIKE

	By	Date		By	Date
Designed	JRL	01/08/2015	Checked	GJO	01/08/2015
Drawn	BMB	01/08/2015	In Charge of	SRT	01/08/2015

MAINE TURNPIKE AUTHORITY
2360 Congress Street
Portland, ME 04102
TEL (207) 871–7771
FAX (207) 879–5567

MAINE TURNPIKE

THE GOLD STAR MEMORIAL HIGHWAY

MTA PROJECT MANAGER: Joseph R. Leavitt, P.E.

PAVEMENT REHABILITATION
CLEAR ZONE IMPROVEMENTS

MISCELLANEOUS DETAILS 1

SHEET NUMBER: P–3

CONTRACT: 2015.02

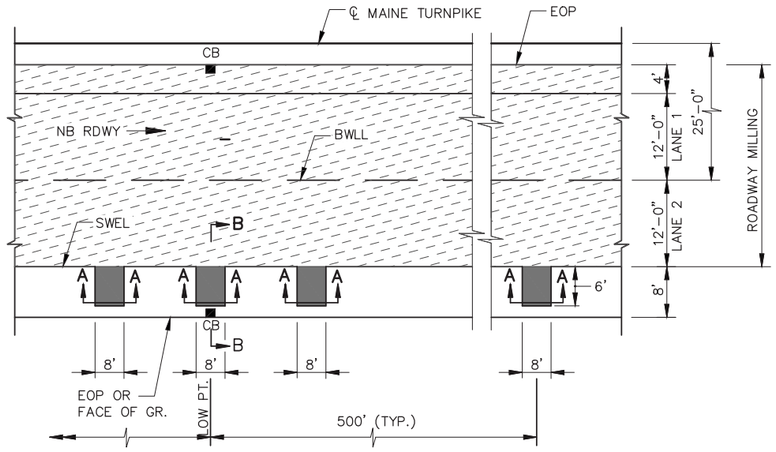

PLAN VIEW

MM68.5 TO MM74.9

NOTES:

1. THE CATCH BASINS IN THE FOUR FOOT MEDIAN SHOULDERS SHALL HAVE A TEN FOOT TEMPORARY BITUMINOUS RAMP ON BOTH SIDES PARALLEL WITH THE MAINE TURNPIKE AND SHALL BE INCIDENTAL TO HOT MIX ASPHALT 12.5mm.

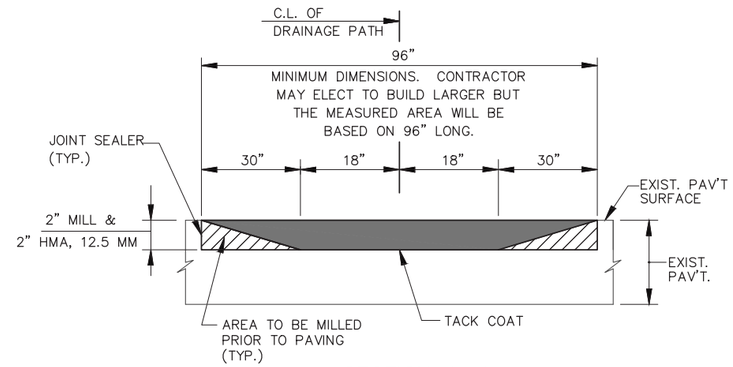

SECTION A–A

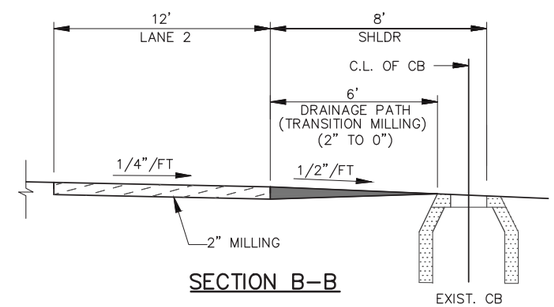

SECTION B–B

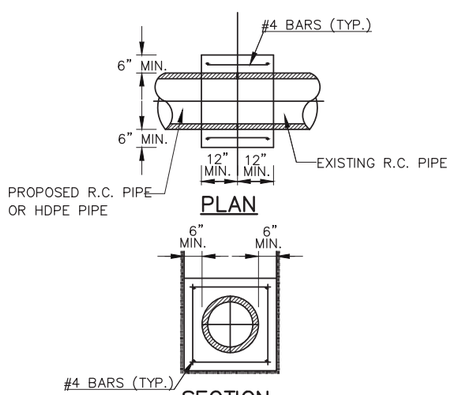

PLAN

SECTION

CONCRETE COLLAR

N.T.S.

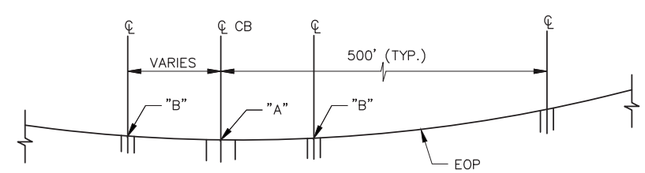

PROFILE

LEGEND

= DRAINAGE PATH MILLING

= ROADWAY MILLING

NOTES:

1. POINT "B" IS 1" HIGHER THAN POINT "A".
2. DRAINAGE PATH REQUIRED AT ALL LOW POINTS.
3. MEDIAN LOW POINS JUST INSIDE THE FOUR FOOT SHOULDER THAT IS MILL SHALLEBE OPENED FOR WATER FLOW IF THE EXISTING MATREIAL IS HIGH. THIS SHALL BE INCIDENTAL TO MILLING.

DRAINAGE PATH DETAILS

Scale: NOT TO SCALE

No.	Revision	By	Date

Designed by:

	By	Date		By	Date
Designed	JRL	01/08/2015	Checked	GJO	01/08/2015
Drawn	BMB	01/08/2015	In Charge of	SRT	01/08/2015

MAINE TURNPIKE AUTHORITY
2360 Congress Street
Portland, ME 04102
TEL (207) 871–7771
FAX (207) 879–5567

THE GOLD STAR MEMORIAL HIGHWAY

MTA PROJECT MANAGER: Joseph R. Leavitt, P.E.

PAVEMENT REHABILITATION
CLEAR ZONE IMPROVEMENTS

MISCELLANEOUS DETAILS 2

SHEET NUMBER: P–4

CONTRACT: 2015.02

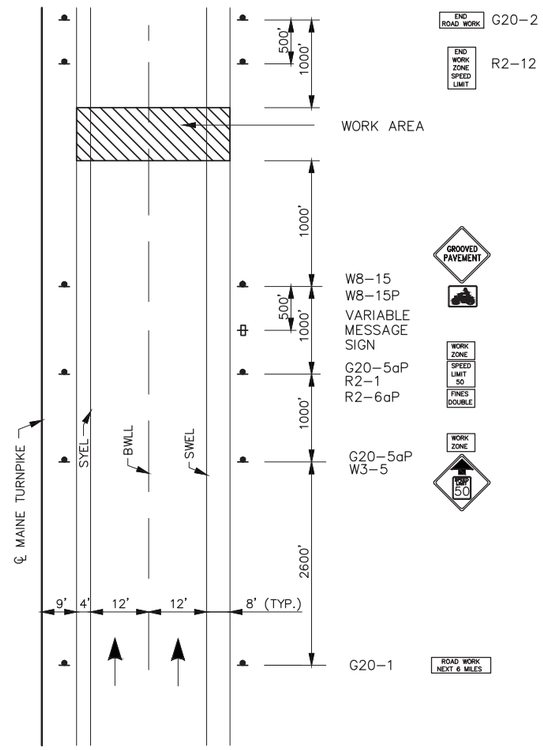

MAINLINE PAVING
ADVANCED PROJECT SIGNING

NOTES:

1. FOR SIGN DETAILS, SEE SIGN SUMMARY SHEETS.
2. ALL SIGNS ARE TO BE MOUNTED ON NCHRP 350 APPROVED POSTS.
3. UNCOVER W8-15 AND W8-15P SIGNS WHEN PAVEMENT IS MILLED OR AS DIRECTED BY THE RESIDENT.
4. PROVIDE W8-15 AND W8-15P AT ALL MILLED LOCATIONS.

Scale: NOT TO SCALE

No.	Revision	By	Date

Designed by:

	By	Date		By	Date
Designed	JRL	01/08/2015	Checked	GJO	01/08/2015
Drawn	BMB	01/08/2015	In Charge of	SRT	01/08/2015

MAINE TURNPIKE AUTHORITY
2360 Congress Street
Portland, ME 04102
TEL (207) 871-7771
FAX (207) 879-5567

THE GOLD STAR MEMORIAL HIGHWAY

MTA PROJECT MANAGER: Joseph R. Leavitt, P.E.

PAVEMENT REHABILITATION
CLEAR ZONE IMPROVEMENTS

TRAFFIC CONTROL

SHEET NUMBER: T-1

CONTRACT: 2015.02

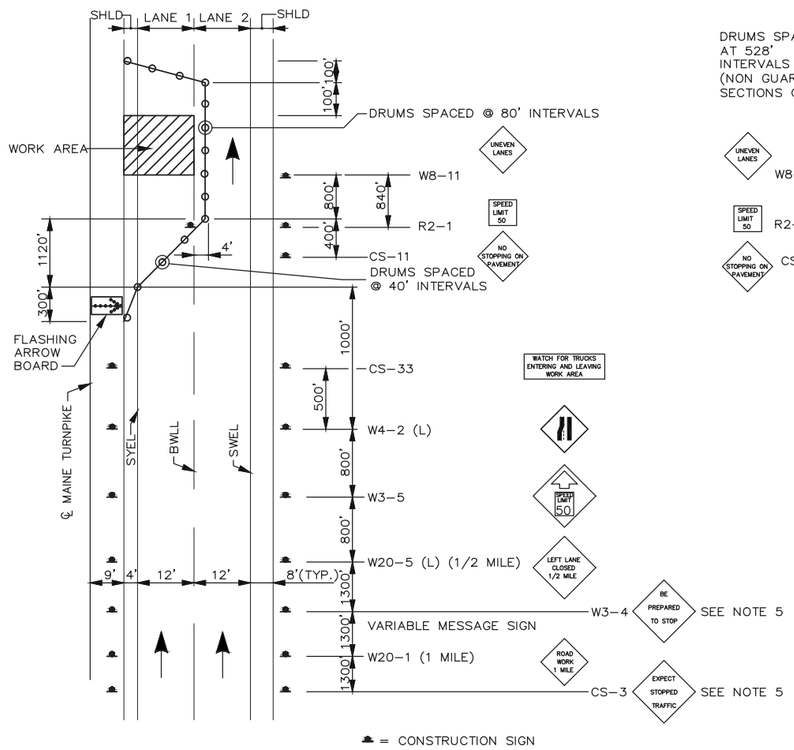

LANE CLOSURE FOR MILLING AND PAVING OPERATIONS
LANE 1

LANE CLOSURE FOR PAVEMENT MARKINGS
LANE 1

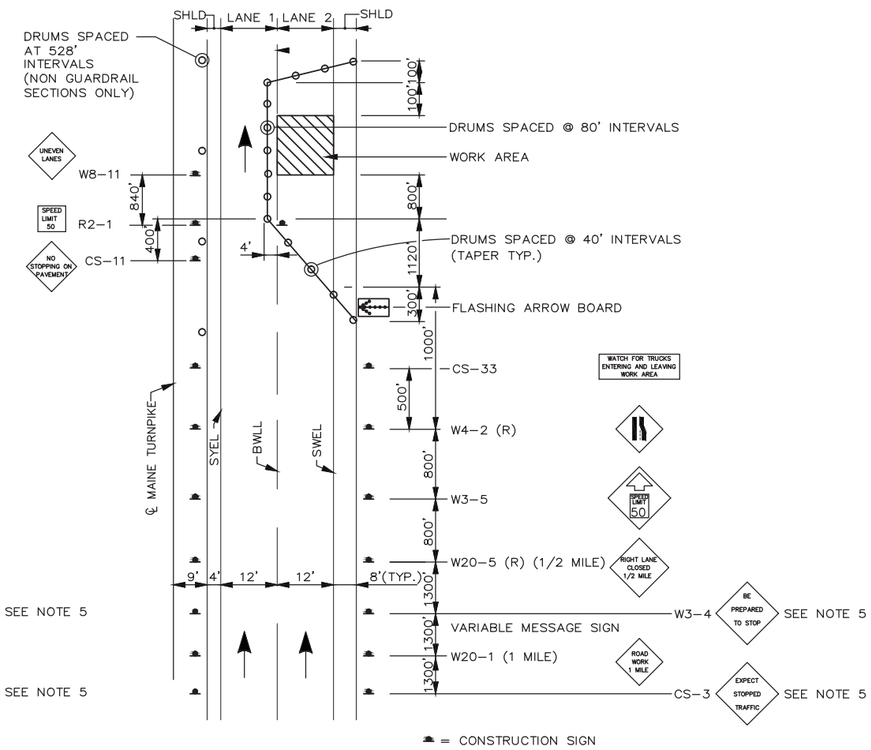

LANE CLOSURE FOR MILLING AND PAVING OPERATIONS
LANE 2

NOTES:

1. FOR SIGN DETAILS, SEE SIGN SUMMARY SHEETS.
2. ALL TEMPORARY LANE CLOSURE SIGNS ARE TO BE MOUNTED ON EASELS.
3. STANDARD SINGLE LANE CLOSURES FOR LANES 1 AND 2 SHALL BE USED FOR DRAINAGE WORK, GUARDRAIL WORK, CLEAR ZONE IMPROVEMENTS, MEDIAN CROSSOVER WORK, EQUIPMENT MOVES, BERM DROP OFF CORRECTION WORK, PAINTING OF SOLID WHITE LANE LINES, AND ALL OTHER WORK NOT REQUIRING ENCROACHMENT INTO THE ADJACENT LANE.
4. SEE SHEET T-3 FOR STANDARD SINGLE LANE CLOSURE DETAILS.
5. ERECT CS-3 AND W3-4 SIGNS IMMEDIATELY PRIOR TO SCHEDULED STOPPAGES FOR EQUIPMENT MOVES AND REMOVE THE CS-3 AND W3-4 SIGNS IMMEDIATELY AFTER THE SCHEDULED STOPPAGES ARE COMPLETE.

Scale: NOT TO SCALE

No.	Revision	By	Date

Designed by:

	By	Date		By	Date
Designed	JRL	01/08/2015	Checked	GJO	01/08/2015
Drawn	BMB	01/08/2015	In Charge of	SRT	01/08/2015

MAINE TURNPIKE AUTHORITY
2360 Congress Street
Portland, ME 04102
TEL (207) 871-7771
FAX (207) 879-5567

THE GOLD STAR MEMORIAL HIGHWAY

MTA PROJECT MANAGER: Joseph R. Leavitt, P.E.

PAVEMENT REHABILITATION
CLEAR ZONE IMPROVEMENTS

TRAFFIC CONTROL
LANE CLOSURE DETAILS 1

SHEET NUMBER: T-2

CONTRACT: 2015.02

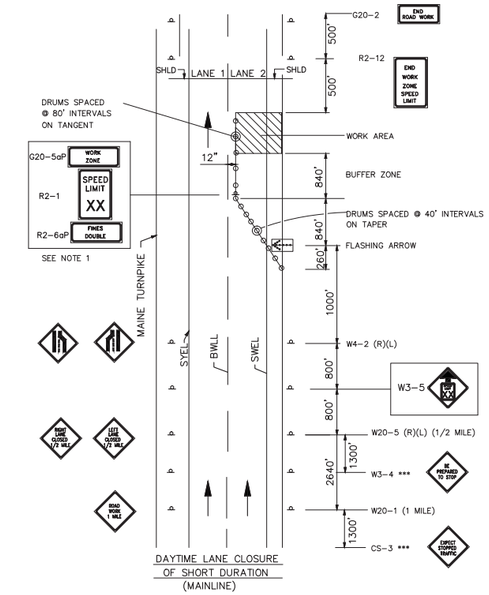

SINGLE LANE CLOSURE SIGNS ON EASELS

1. FOR EASEL SET UP ONLY, THIS SIGN IS NOT BRACKETED. ONE SIGN ASSEMBLY IS PLACED AT THE END OF THE TAPER .

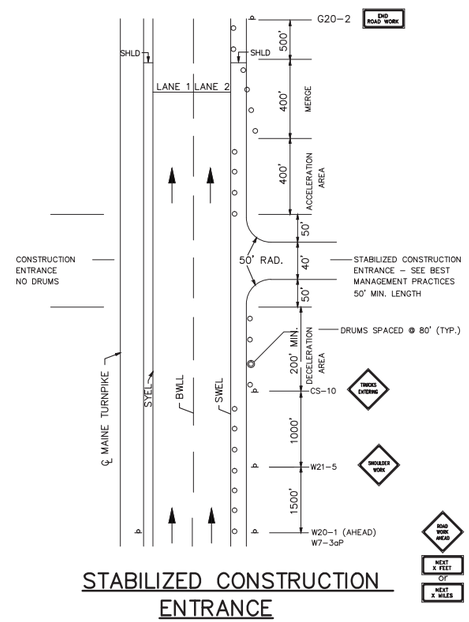

STABILIZED CONSTRUCTION ENTRANCE

1. SIGN G20-2 IS NOT REQUIRED IF ENTRANCE IS WITHIN THE WORK ZONE.

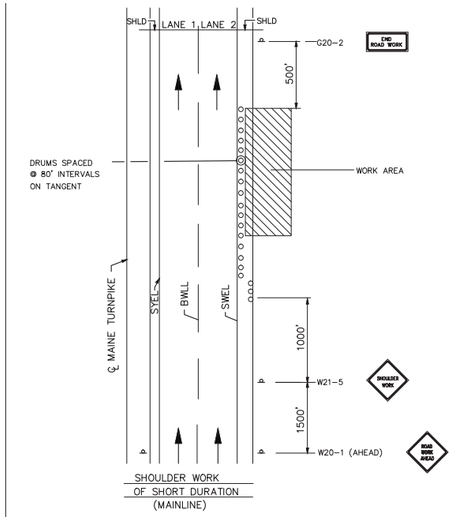

SHOULDER WORK

1. THE W20-1 AND G20-2 SIGNS ARE NOT REQUIRED IF THE SHOULDER CLOSURE IS WITHIN A PREVIOUSLY ESTABLISHED WORK ZONE.

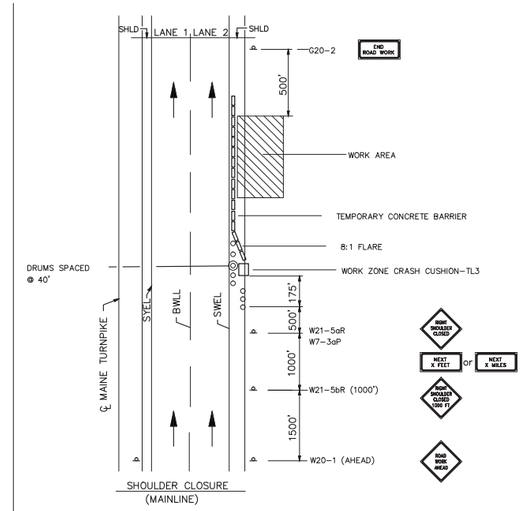

SHOULDER CLOSURE

1. THE W20-1 AND G20-2 SIGNS ARE NOT REQUIRED IF THE SHOULDER CLOSURE IS WITHIN A PREVIOUSLY ESTABLISHED WORK ZONE.

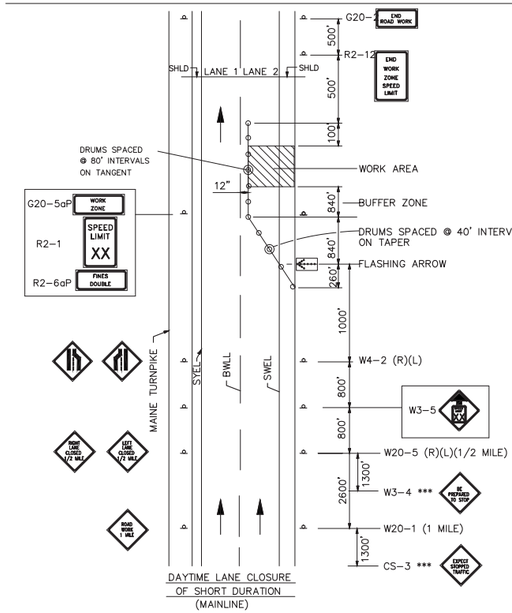

SINGLE LANE CLOSURE - POST MOUNTED SIGN SETUP

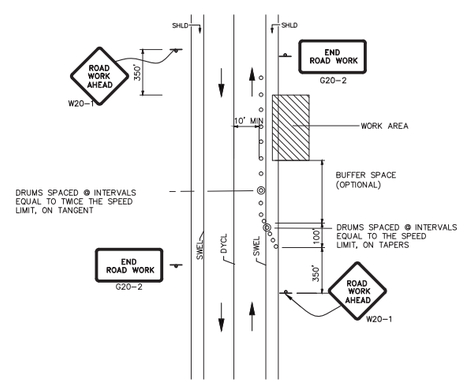

TEMP. LOCAL ROAD SHOULDER CLOSURE

NOTES:

1. FOR SHORT DURATION WORK (<1 HOUR), THE TAPER AND CHANNELIZATION DEVICES MAY BE OMITTED IF SHADOW VEHICLE IS PRESENT WITH ACTIVATED HIGH-INTENSITY ROTATING, FLASHING, OSCILLATING OR STROBE LIGHTS.

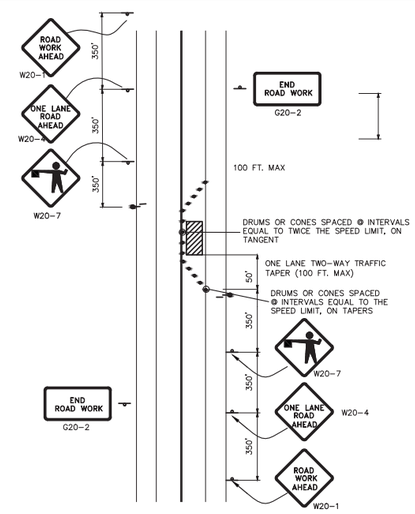

LOCAL ROAD SINGLE LANE CLOSURE

NOTES:

1. ROAD WORK AHEAD & END ROAD WORK SIGNS MAY BE OMITTED FOR SHORT DURATION OPERATIONS (LESS THAN 1 HOUR).
2. FLAGGERS SHALL BE LOCATED SO THEY ARE CLEARLY VISIBLE TO APPROACHING DRIVERS.
3. SIGN SPACING ASSUMES LOCAL ROAD SPEED IS 40 MPH OR LESS.

GENERAL MAINTENANCE OF TRAFFIC NOTES:

1. ALL WORK TO CONFORM TO MAINE DEPARTMENT OF TRANSPORTATION STANDARD SPECIFICATIONS FOR HIGHWAY AND BRIDGES 2002, EXCEPT AS MODIFIED BY THE MAINE TURNPIKE AUTHORITY'S GENERAL AND SPECIAL PROVISIONS.
2. ALL PAVMENT STRIPING & SIGNING SHALL BE IN ACCORDANCE WITH THE "MANUAL ON UNIFORM TRAFFIC CONTROL DEVICES", U.S.D.O.T., F.H.W.A., LATEST EDITION. NOTE THERE IS A 2009 EDITION OF MUTCD.
3. THESE PLANS SHOW THE GENERAL CONDITION FOR TURNPIKE MAINLINE TRAFFIC CONTROL. DURING CONSTRUCTION, SLIGHT MODIFICATIONS IN CONSTRUCTION PROCEDURE MAY OCCUR AND MAY REQUIRE SOME MINOR ADJUSTMENTS TO BE MADE IN THE FIELD, ALL PROCEDURES MUST BE APPROVED BY THE RESIDENT.
4. THE CONTRACTOR SHALL REMOVE ALL PAVEMENT MARKINGS THAT CONFLICT WITH PROPOSED PAVEMENT MARKINGS IN ACCORDANCE WITH THE SPECIFICATIONS AND MUTCD. PAYMENT SHALL BE MADE UNDER ITEM 627.77 - REMOVING PAVEMENT MARKINGS.
5. EXPOSED BARRIER ENDS SHALL BE PROTECTED BY A WORK ZONE CRASH CUSHION. PAYMENT WILL BE UNDER ITEM 527.341 - WORK ZONE CRASH CUSHION - TL-3.
6. ALL GEOMETRIC INFORMATION FOR ALL PHASES OF TRAFFIC CONTROL WILL BE SUPPLIED TO THE CONTRACTOR AFTER AWARD.

ABBREVIATIONS FOR ALL M.O.T. PLANS

BWLL = BROKEN WHITE LANE LINE
SWEL = SOLID WHITE EDGE LINE
SYEL = SOLID YELLOW EDGE LINE
TBWLL = TEMPORARY BROKEN WHITE LANE LINE
TSWEL = TEMPORARY SOLID WHITE EDGE LINE
TSYEL = TEMPORARY SOLID YELLOW EDGE LINE

Scale: NOT TO SCALE

No.	Revision	By	Date

Designed by: MAINE TURNPIKE

	By	Date		By	Date
Designed	JRL	01/08/2015	Checked	GJO	01/08/2015
Drawn	BMB	01/08/2015	In Charge of	SRT	01/08/2015

MAINE TURNPIKE AUTHORITY
2360 Congress Street
Portland, ME 04102
TEL (207) 871-7771
FAX (207) 879-5567

MAINE TURNPIKE

THE GOLD STAR MEMORIAL HIGHWAY

MTA PROJECT MANAGER: Joseph R. Leavitt, P.E.

PAVEMENT REHABILITATION
CLEAR ZONE IMPROVEMENTS

TRAFFIC CONTROL
LANE CLOSURE DETAILS 2

SHEET NUMBER: T-3

CONTRACT: 2015.02

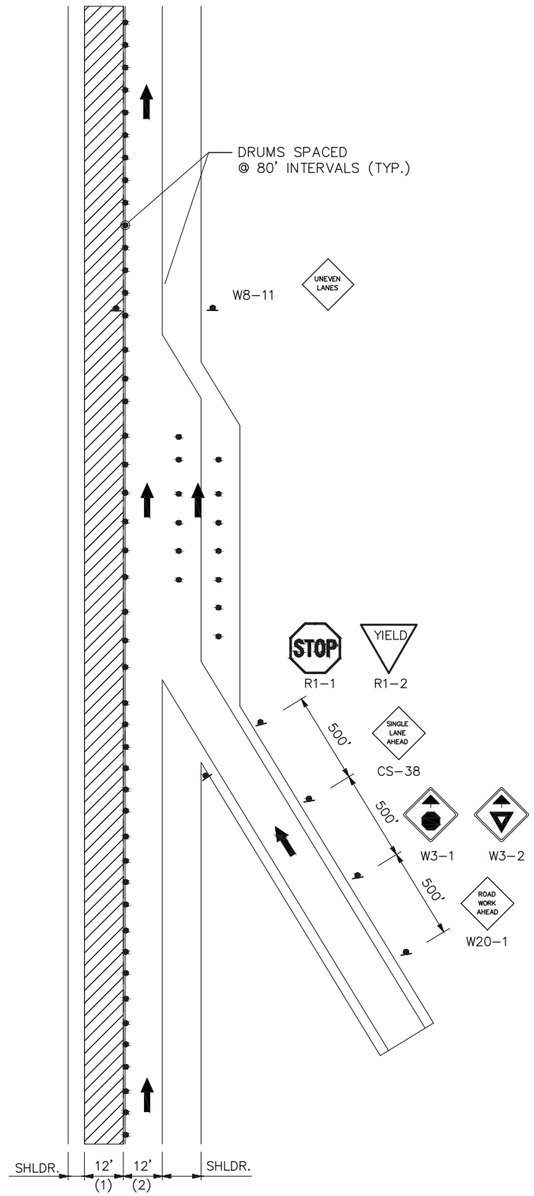

LANE 1 CLOSED
TRAFFIC IN LANE 2
ENTERING RAMP OPEN
(SEE NOTE 4)

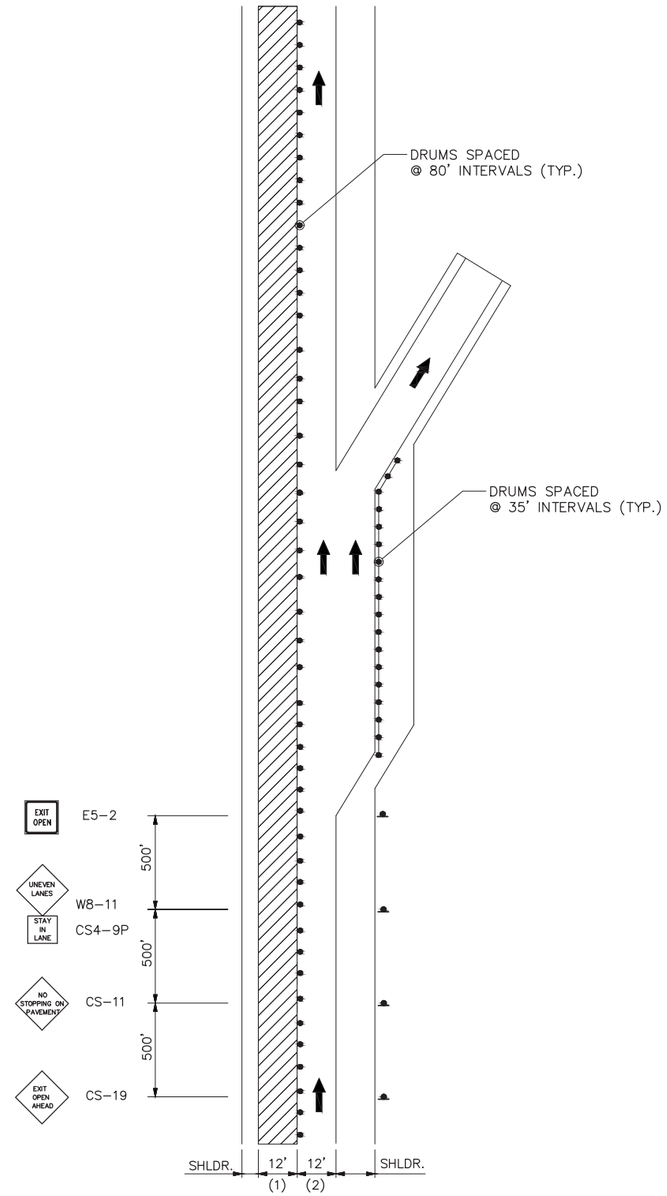

LANE 1 CLOSED
TRAFFIC IN LANE 2
EXITING RAMP OPEN
(SEE NOTE 5)

LEGEND

= WORK AREA
= CONSTRUCTION SIGN
= DRUM
= PORTABLE – CHANGEABLE MESSAGE SIGN

NOTES:

1. FOR SIGN DETAILS, SEE SIGN SUMMARY SHEETS.
2. ALL SIGNS ARE TO BE MOUNTED ON EASELS.
3. LANE CLOSURES AT ENTRANCE AND EXIT RAMPS MAY BE COMBINED IF APPROVED BY THE RESIDENT.
4. WITH LANE 1 CLOSED, AND LANE 2 AND ENTERING RAMP OPEN, USE THIS DETAIL WITH YIELD SIGN.
5. WITH LANE 1 CLOSED, AND LANE 2 AND EXITING RAMP OPEN, USE THIS DETAIL.

Scale:
NOT TO SCALE

No.	Revision	By	Date

Designed by:

	By	Date		By	Date
Designed	JRL	01/08/2015	Checked	GJO	01/08/2015
Drawn	BMB	01/08/2015	In Charge of	SRT	01/08/2015

MAINE TURNPIKE AUTHORITY
2360 Congress Street
Portland, ME 04102
TEL (207) 871-7771
FAX (207) 879-5567

THE GOLD STAR MEMORIAL HIGHWAY

MTA PROJECT MANAGER: Joseph R. Leavitt, P.E.

PAVEMENT REHABILITATION
CLEAR ZONE IMPROVEMENTS

TRAFFIC CONTROL
LANE CLOSURE DETAILS 3

SHEET NUMBER: T-4

CONTRACT: 2015.02

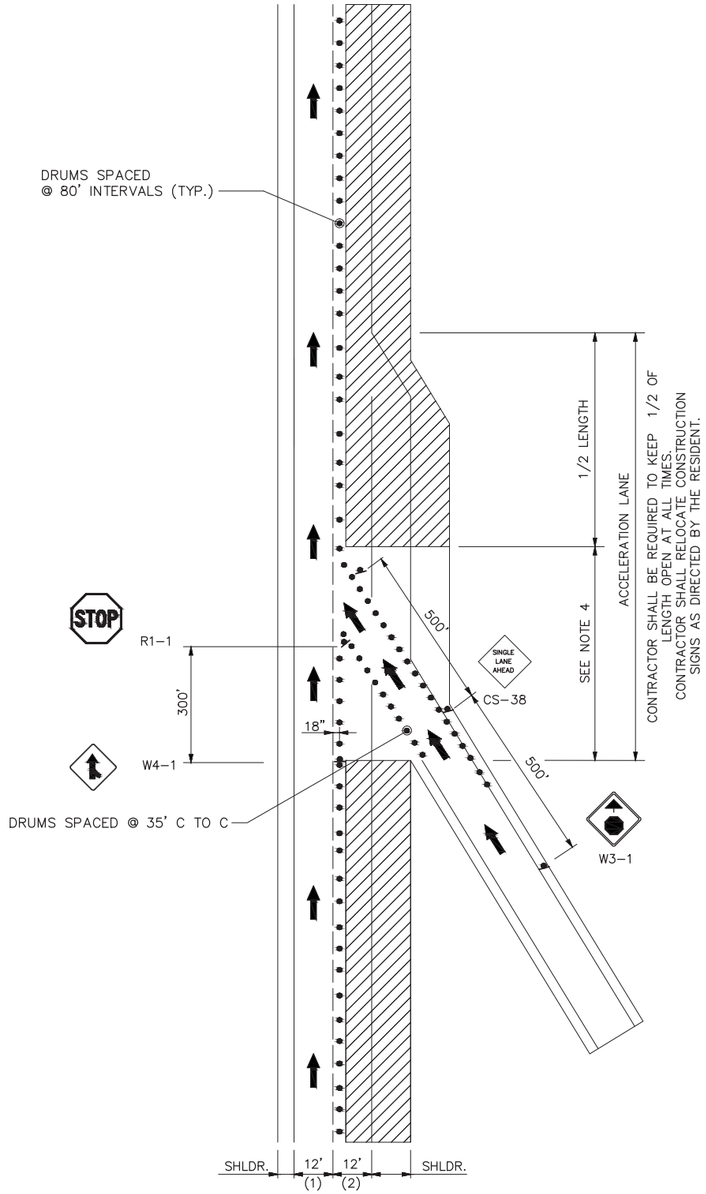

LANE 2 CLOSED
TRAFFIC IN LANE 1
ENTERING RAMP OPEN
(SEE NOTE 4)

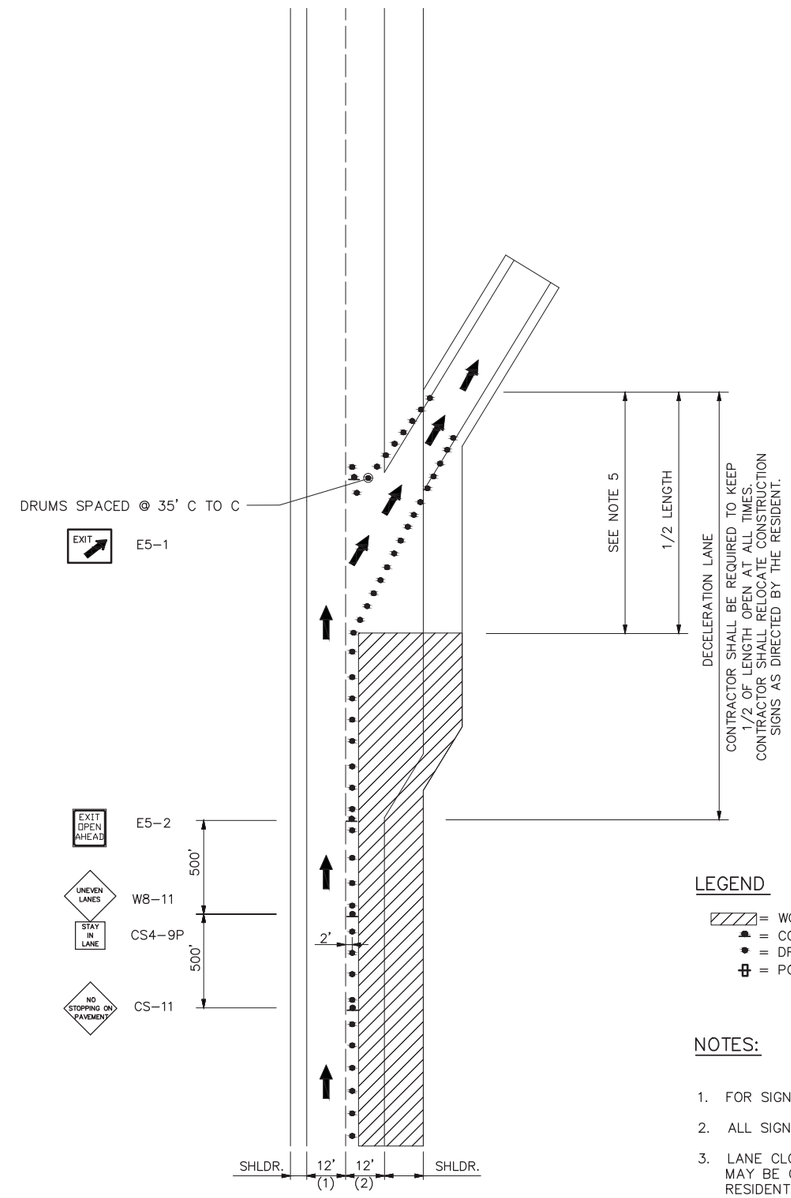

LANE 2 CLOSED
TRAFFIC IN LANE 1
EXITING RAMP OPEN
(SEE NOTE 5)

LEGEND

= WORK AREA
= CONSTRUCTION SIGN
= DRUM
= PORTABLE – CHANGEABLE NESSAGE SIGN

NOTES:

1. FOR SIGN DETAILS, SEE SIGN SUMMARY SHEETS.
2. ALL SIGNS ARE TO BE MOUNTED ON EASELS.
3. LANE CLOSURES AT ENTRANCE AND EXIT RAMPS MAY BE COMBINED IF APPROVED BY THE RESIDENT.
4. WITH LANE 2 CLOSED, AND LANE 1 AND ENTERING RAMP OPEN, USE THIS DETAIL WITH STOP SIGN.
5. WITH LANE 2 CLOSED, AND LANE 1 AND EXITING RAMP OPEN, USE THIS DETAIL.

Scale:
NOT TO SCALE

No.	Revision	By	Date

Designed by:

	By	Date		By	Date
Designed	JRL	01/08/2015	Checked	GJO	01/08/2015
Drawn	BMB	01/08/2015	In Charge of	SRT	01/08/2015

MAINE TURNPIKE AUTHORITY
2360 Congress Street
Portland, ME 04102
TEL (207) 871-7771
FAX (207) 879-5567

THE GOLD STAR MEMORIAL HIGHWAY

MTA PROJECT MANAGER: Joseph R. Leavitt, P.E.

PAVEMENT REHABILITATION
CLEAR ZONE IMPROVEMENTS

TRAFFIC CONTROL
LANE CLOSURE DETAILS 4

SHEET NUMBER: T-5

CONTRACT: 2015.02

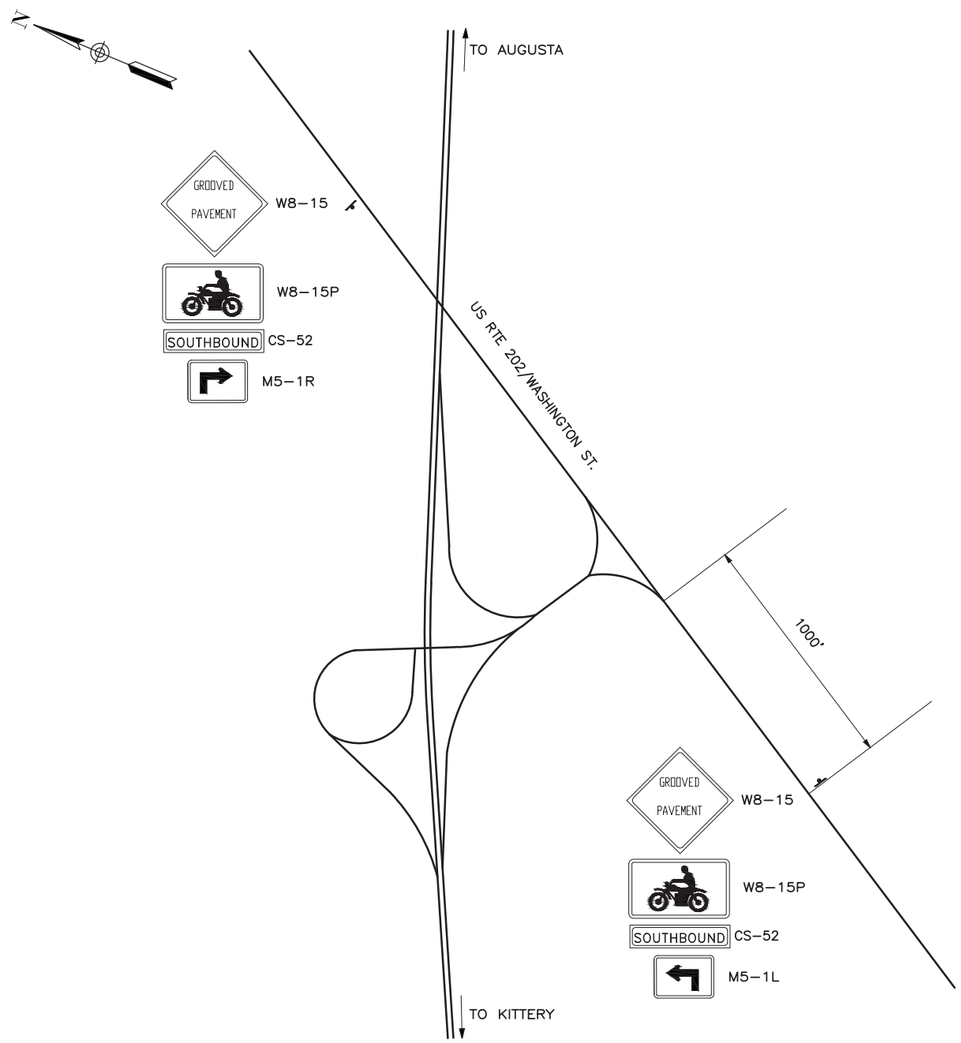

INTERCHANGE 75 AUBURN
N.T.S.

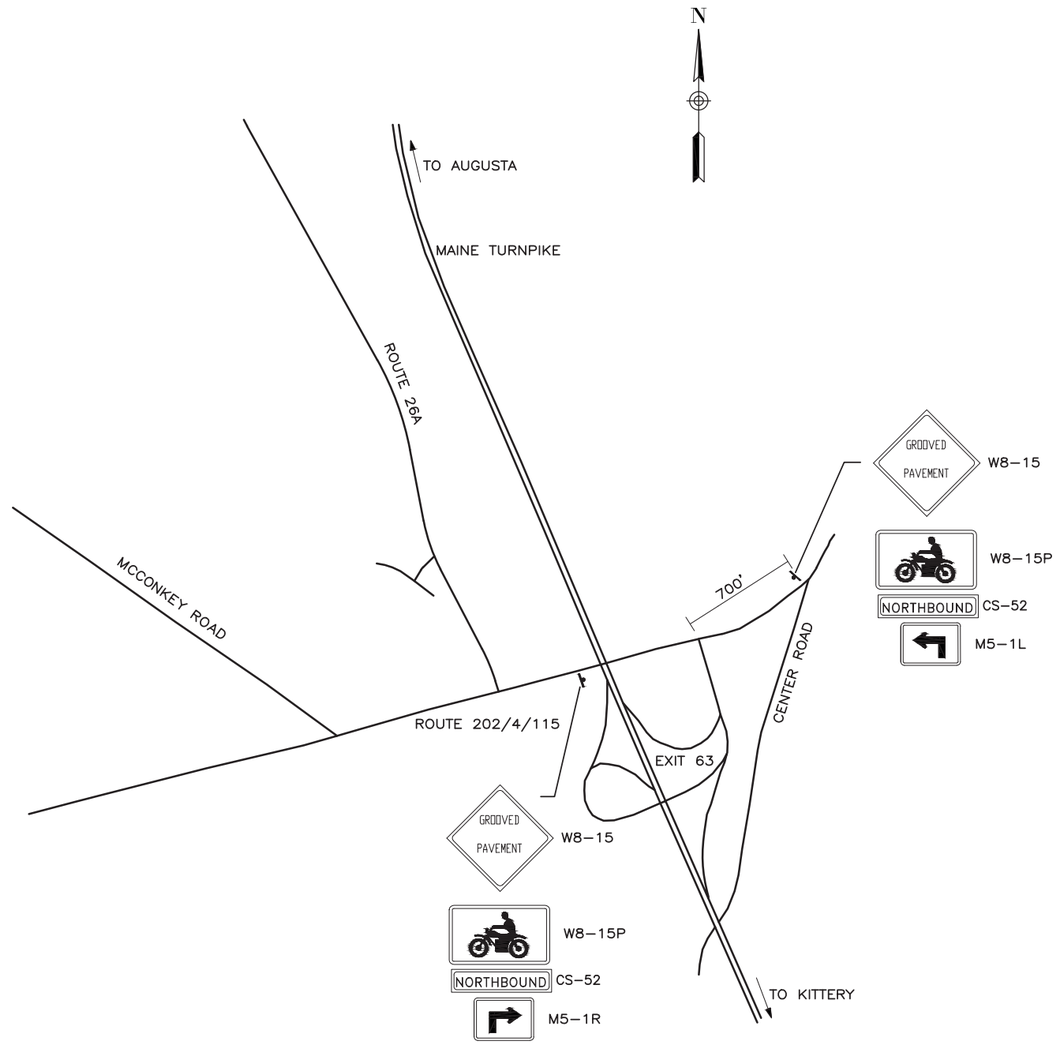

INTERCHANGE 63 GRAY
N.T.S.

Scale:
NOT TO SCALE

No.	Revision	By	Date

Designed by:

	By	Date		By	Date
Designed	JRL	01/08/2015	Checked	GJO	01/08/2015
Drawn	BMB	01/08/2015	In Charge of	SRT	01/08/2015

MAINE TURNPIKE AUTHORITY
2360 Congress Street
Portland, ME 04102
TEL (207) 871–7771
FAX (207) 879–5567

THE GOLD STAR MEMORIAL HIGHWAY

MTA PROJECT MANAGER: Joseph R. Leavitt, P.E.

PAVEMENT REHABILITATION
CLEAR ZONE IMPROVEMENTS

MAINTENANCE OF TRAFFIC

SHEET NUMBER: T–6

CONTRACT: 2015.02

IDENTIFI-CATION NUMBER	SIZE OF SIGN WIDTH	SIZE OF SIGN HEIGHT	TEXT	TEXT DIMENSIONS (INCHES) LETTER HEIGHT	TEXT DIMENSIONS (INCHES) VERTICAL SPACING	TEXT DIMENSIONS (INCHES) ARROW RTE. MKR.	NUMBER OF SIGNS REQUIRED	COLOR BACK-GROUND	COLOR LEGEND BORDER	BORDER RADIUS	AREA IN SQUARE FEET
G20-1 (8) (5)	48"	24"	ROAD WORK NEXT X MILES	TEXT DIMENSIONS SHALL CONFORM TO "2004 EDITION – STANDARD HIGHWAY SIGNS – 2012 SUPPLEMENT"			4	COLORS SHALL CONFORM TO "2004 EDITION –STANDARD HIGHWAY SIGNS –2012 SUPPLEMENT"			8.00 (32)
G20-2	48"	24"	END ROAD WORK				10				8.00 (80)
G20-5aP	48"	24"	WORK ZONE				32				8.00 (256)
R2-1 (50)	48"	60"	SPEED LIMIT XX				28				20.00 (560)
R2-6aP	48"	24"	FINES DOUBLED	6" 6"	4.5"		32				8.00 (256)
M5-1L	36"	24"					2				6.00 (12)
M5-1R	36"	24"					2				6.00 (12)
M5-1	36"	24"					4				6.00 (24)
R1-1	48"	48"	STOP				2	RED	WHITE		16.00 (32)
R1-2	60"	60" 60"	YIELD				2	WHITE	RED		12.50 (25)
R2-12	36"	54"	END WORK ZONE SPEED LIMIT	6" 6" 6" 6" 6"	4.5" 4.5" 4.5" 4.5"		16	COLORS SHALL CONFORM TO "2004 EDITION –STANDARD HIGHWAY SIGNS –2012 SUPPLEMENT"			13.50 (216)
E5-1	72"	60"	EXIT	TEXT DIMENSIONS SHALL CONFORM TO "2004 EDITION – STANDARD HIGHWAY SIGNS – 2012 SUPPLEMENT"			2	GREEN	WHITE		30.00 (60)
CS5-2	60"	48"	EXIT OPEN AHEAD				2	ORANGE	BLACK		20.00 (40)
W1-4L	48"	48"					4	COLORS SHALL CONFORM TO "2004 EDITION –STANDARD HIGHWAY SIGNS –2012 SUPPLEMENT"			16.00 (64)

IDENTIFI-CATION NUMBER	SIZE OF SIGN WIDTH	SIZE OF SIGN HEIGHT	TEXT	TEXT DIMENSIONS (INCHES) LETTER HEIGHT	TEXT DIMENSIONS (INCHES) VERTICAL SPACING	TEXT DIMENSIONS (INCHES) ARROW RTE. MKR.	NUMBER OF SIGNS REQUIRED	COLOR BACK-GROUND	COLOR LEGEND BORDER	BORDER RADIUS	AREA IN SQUARE FEET
W1-4R	48"	48"		TEXT DIMENSIONS SHALL CONFORM TO "2004 EDITION – STANDARD HIGHWAY SIGNS – 2012 SUPPLEMENT"			4	COLORS SHALL CONFORM TO "2004 EDITION –STANDARD HIGHWAY SIGNS –2012 SUPPLEMENT"			16.00 (64)
W3-1	48"	48"					4	ORANGE	BLACK		16.00 (64)
W3-2a	48"	48"					4	ORANGE	BLACK		16.00 (64)
W3-4	48"	48"	BE PREPARED TO STOP				8	COLORS SHALL CONFORM TO "2004 EDITION –STANDARD HIGHWAY SIGNS –2012 SUPPLEMENT"			16.00 (128)
W3-5 (50)	48"	48"	SPEED LIMIT XX				16				16.00 (256)
W4-2L	48"	48"					8				16.00 (128)
W4-2R	48"	48"					8				16.00 (128)
W5-4	48"	48"	LANES NARROW				4				16.00 (64)
W8-1	48"	48"	BUMP				8				16.00 (128)
W8-11	48"	48"	UNEVEN LANES				24				16.00 (384)

Scale:
NOT TO SCALE

No.	Revision	By	Date

Designed by:

	By	Date		By	Date
Designed	JRL	01/08/2015	Checked	GJO	01/08/2015
Drawn	BMB	01/08/2015	In Charge of	SRT	01/08/2015

MAINE TURNPIKE AUTHORITY
2360 Congress Street
Portland, ME 04102
TEL (207) 871-7771
FAX (207) 879-5567

MAINE TURNPIKE

THE GOLD STAR MEMORIAL HIGHWAY

MTA PROJECT MANAGER: Joseph R. Leavitt, P.E.

PAVEMENT REHABILITATION
CLEAR ZONE IMPROVEMENTS

SIGN SUMMARY 1

SHEET NUMBER: T-7

CONTRACT: 2015.02

IDENTIFI-CATION NUMBER	SIZE OF SIGN		TEXT	TEXT DIMENSIONS (INCHES)			NUMBER OF SIGNS REQUIRED	COLOR		BORDER RADIUS	AREA IN SQUARE FEET
	WIDTH	HEIGHT		LETTER HEIGHT	VERTICAL SPACING	ARROW RTE. MKR.		BACK-GROUND	LEGEND BORDER		
W8-15	48"	48"	GROOVED PAVEMENT	TEXT DIMENSIONS SHALL CONFORM TO "2004 EDITION – STANDARD HIGHWAY SIGNS – 2012 SUPPLEMENT"			18	COLORS SHALL CONFORM TO "2004 EDITION –STANDARD HIGHWAY SIGNS –2012 SUPPLEMENT"			16.00 (288)
W8-15P	30"	24"					18				5.00 (90)
W16-2aP	30"	18"	1000 FT				2				3.75 (7.5)
W20-1 (1 MILE)	48"	48"	ROAD WORK XXX				10				16.00 (160)
W20-5L (1/2 MILE) (AHEAD)	48"	48"	LEFT LANE CLOSED XXX				8 1				16.00 (128) (16)
W20-5R (1/2 MILE) (AHEAD)	48"	48"	RIGHT LANE CLOSED XXX				8 1				16.00 (128) (16)
W21-5aR	48"	48"	RIGHT SHOULDER CLOSED				4				16.00 (64)
W21-5aL	48"	48"	LEFT SHOULDER CLOSED				4				16.00 (64)
W21-5bR (1000 FT)	48"	48"	RIGHT SHOULDER CLOSED 1000 FT				4				16.00 (64)
W21-5bL (1000 FT)	48"	48"	LEFT SHOULDER CLOSED 1000 FT				4				16.00 (64)

IDENTIFI-CATION NUMBER	SIZE OF SIGN		TEXT	TEXT DIMENSIONS (INCHES)			NUMBER OF SIGNS REQUIRED	COLOR		BORDER RADIUS	AREA IN SQUARE FEET
	WIDTH	HEIGHT		LETTER HEIGHT	VERTICAL SPACING	ARROW RTE. MKR.		BACK-GROUND	LEGEND BORDER		
W24-1L	48"	48"		TEXT DIMENSIONS SHALL CONFORM TO "2004 EDITION – STANDARD HIGHWAY SIGNS – 2012 SUPPLEMENT"			2	COLORS SHALL CONFORM TO "2004 EDITION –STANDARD HIGHWAY SIGNS –2012 SUPPLEMENT"			16.00 (32.00)
W24-1R	48"	48"					2				16.00 (32.00)
CS-3	48"	48"	EXPECT STOPPED TRAFFIC	6" 6" 6"	4" 4"		8	ORANGE	BLACK		16.00 (128)
CS-10	48"	48"	TRUCKS ENTERING	7" 7"	6"		4	ORANGE	BLACK		16.00 (64)
CS-11	48"	48"	NO STOPPING ON PAVEMENT	6" 6" 6"	4" 4"		6	ORANGE	BLACK		16.00 (96)
CS-33	96"	36"	WATCH FOR TRUCKS ENTERING AND LEAVING WORK AREA	6" 6" 6"	4" 4"		8	ORANGE	BLACK		24.00 (192)
CS-52	96"	18"	NORTHBOUND SOUTHBOUND				7 6				12.00 (84) 12.00 (72)
CS-53L	48"	48"		TEXT DIMENSIONS SHALL CONFORM TO "2004 EDITION – STANDARD HIGHWAY SIGNS – 2012 SUPPLEMENT"			4	COLORS SHALL CONFORM TO "2004 EDITION –STANDARD HIGHWAY SIGNS –2012 SUPPLEMENT"			16.00 (64)
CS-53R	48"	48"					4				16.00 (64)
CS4-9P	30"	24"	STAY IN LANE				24	ORANGE	BLACK		5.00 (120)

Scale:

NOT TO SCALE

No.	Revision	By	Date

Designed by:

MAINE TURNPIKE

	By	Date		By	Date
Designed	JRL	01/08/2015	Checked	GJO	01/08/2015
Drawn	BMB	01/08/2015	In Charge of	SRT	01/08/2015

MAINE TURNPIKE AUTHORITY
2360 Congress Street
Portland, ME 04102
TEL (207) 871-7771
FAX (207) 879-5567

MAINE TURNPIKE

THE GOLD STAR MEMORIAL HIGHWAY

MTA PROJECT MANAGER: Joseph R. Leavitt, P.E.

PAVEMENT REHABILITATION
CLEAR ZONE IMPROVEMENTS

SIGN SUMMARY 2

SHEET NUMBER: T-8

CONTRACT: 2015.02

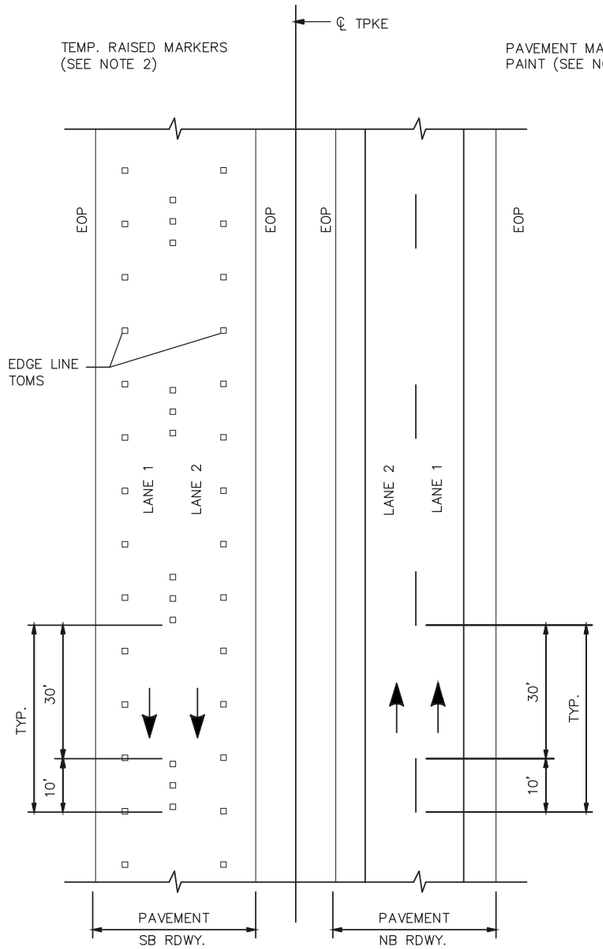

TEMP. PAVEMENT MARKINGS
2 LANE RDWY

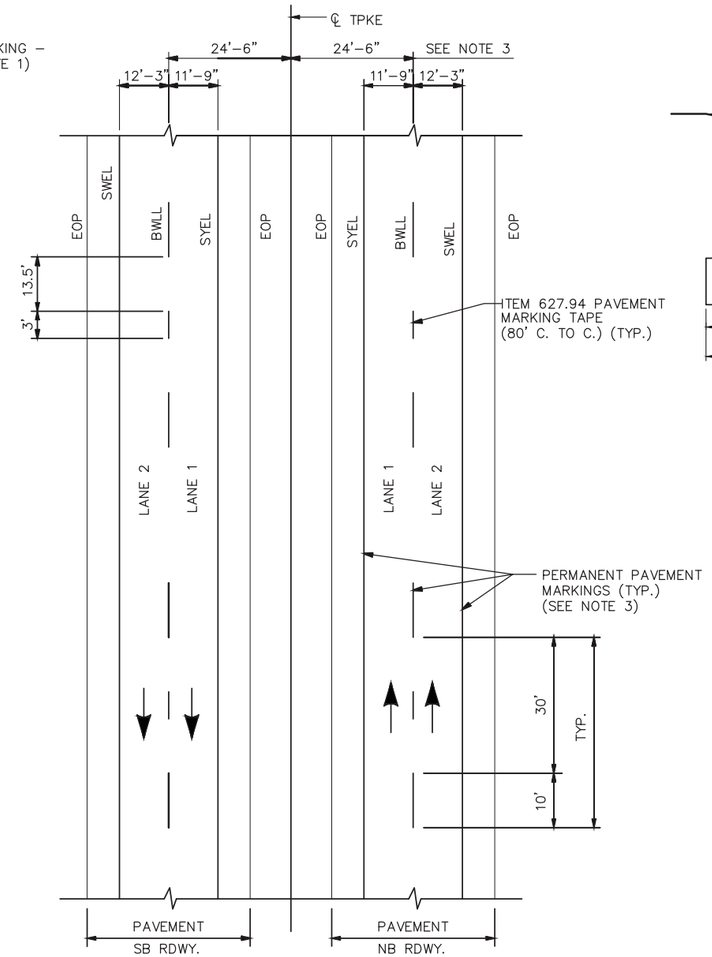

PERMANENT PAVEMENT MARKINGS
2 LANE RDWY

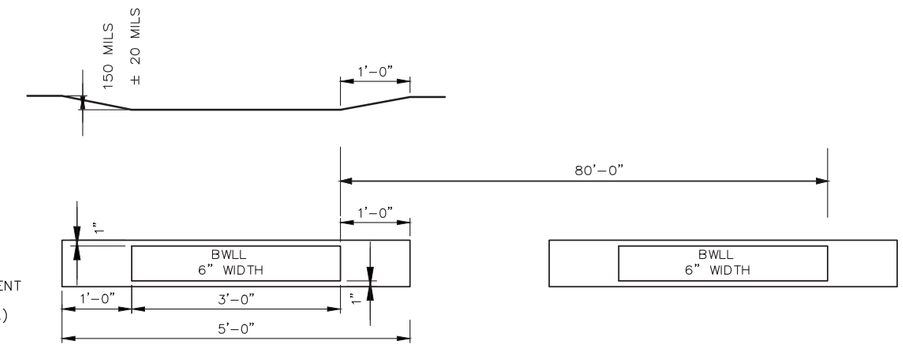

PERMANENT PAVEMENT MARKINGS WITH TAPE
GROOVING DETAIL
N.T.S.

NOTES:

1. TEMPORARY PAVEMENT MARKINGS ON MILLED PAVEMENT SHALL BE 6" SOLID WHITE, BROKEN WHITE, AND SOLID YELLOW PAINT LINES.
2. TEMPORARY PAVEMENT MARKINGS ON NEW HMA 12.5MM, OR SHIM MATERIAL, SHALL BE TEMPORARY RAISED PAVEMENT MARKERS. "SOLID" WHITE AND "SOLID" YELLOW LANE LINES SHALL BE TEMPORARY RAISED PAVEMENT MARKERS SPACED AT 10'–0" C. TO C. "BROKEN" WHITE LANE LINES SHALL BE TEMPORARY RAISED PAVEMENT MARKERS SPACED 5'–0" C. TO C. EVERY 40'–0".

NOTES:

1. PERMANENT PAVEMENT MARKINGS SHALL BE 6" WIDE LINES.
2. PERMANENT PAVEMENT MARKINGS SHALL BE INSTALLED ON BOTH ROADWAYS.
3. THE OFFSET DISTANCE SHOWN ARE MEASURED FROM THE CENTER OF THE 6" PAINT LINES.

LEGEND

SYEL = SOLID YELLOW EDGE LINE (6" PAINT)
SWEL = SOLID WHITE EDGE LINE (6" PAINT)
BWLL = BROKEN WHITE LANE LINE (6" PAINT)
EOP = EDGE OF PAVEMENT

Scale: NOT TO SCALE

No.	Revision	By	Date

Designed by:

	By	Date		By	Date
Designed	JRL	01/08/2015	Checked	GJO	01/08/2015
Drawn	BMB	01/08/2015	In Charge of	SRT	01/08/2015

MAINE TURNPIKE AUTHORITY
2360 Congress Street
Portland, ME 04102
TEL (207) 871–7771
FAX (207) 879–5567

THE GOLD STAR MEMORIAL HIGHWAY

MTA PROJECT MANAGER: Joseph R. Leavitt, P.E.

PAVEMENT REHABILITATION
CLEAR ZONE IMPROVEMENTS

PAVEMENT MARKING DETAILS 1

SHEET NUMBER: T–9

CONTRACT: 2015.02

GUARDRAIL EARTHWORK AND PAVEMENT REPAIR NOTES

1. ALL EARTHWORK AND PAVEMENT REPAIRS ASSOCIATED WITH GUARDRAIL INSTALLATIONS AND/OR MODIFICATIONS FOR THIS CONTRACT SHALL BE INCIDENTAL TO THE GUARDRAIL ITEMS UNLESS OTHERWISE NOTED.

2. ALL DISTURBED AREAS DUE TO THE WORK PERFORMED UNDER THIS CONTRACT FOR GUARDRAIL REPAIRS, MODIFICATION AND/OR INSTALLATIONS SHALL BE REPAIRED AND RESTORED TO ORIGINAL CONDITION. GRASSED AREAS SHALL RECEIVE 4" OF LOAM, SEED, FERTILIZER AND MULCH. IN PAVED AREAS, SUBBASE GRAVEL SHALL BE REPLACED AND RECOMPACTED WITH MAINE DOT TYPE-D GRAVEL AND HOT MIX ASPHALT TO A THICKNESS TO MATCH SURROUNDING PAVEMENT.

3. COMPACTION OF EARTH AND/OR SUBBASE GRAVEL AROUND GUARDRAIL POSTS DISTURBED DURING THE WORK IS REQUIRED. ALL POSTS SHALL BE PLUMB AFTER COMPACTION.

4. EXCAVATION NECESSARY TO MAINTAIN DRAINAGE WAYS OUTSIDE OF THE FLEAT 350 WIDENING OR THE SHOULDER WIDENING WORK AREA SHALL BE PAID FOR UNDER ITEM 631.12 ALL PURPOSE EXCAVATOR AS APPROVED BY THE RESIDENT ENGINEER. EXCAVATED MATERIAL SHALL BE USED TO GRADE ANY PROPOSED SLOPE AREA OUTSIDE OF 1:1 SLOPE LIMIT OR USED TO FLATTEN SLOPES OUTSIDE THE WORK AREA AS APPROVED BY THE RESIDENT. PLACEMENT AND COMPACTION OF THE EXCAVATED MATERIAL WILL NOT BE MEASURED SEPARATELY FOR PAYMENT.

5. SLOPES CONSTRUCTED FROM THE ABOVE NOTED EXCAVATED MATERIAL SHALL BE LOAMED, SEEDED AND MULCHED. LOAM, SEED AND MULCH WILL NOT BE MEASURED FOR PAYMENT AND SHALL BE INCIDENTAL TO THE CONTRACT.

6. SLOPES CONSTRUCTED FOR ITEM 205.51 SHALL BE 3:1 WITHIN 50 FEET OF THE TERMINAL END AND CAN BE 2:1 IN ALL OTHER AREAS.

GUARDRAIL INSTALLATION AND MODIFICATION NOTES

1. THE CONTRACTOR SHALL FOLLOW ALL MANUFACTURER'S INSTALLATION INSTRUCTIONS FOR THE INSTALLATION AND/OR MODIFICATION OF ANY AND ALL GUARDRAIL COMPONENTS TO BE INSTALLED UNDER THIS CONTRACT. THE CONTRACTOR SHALL NOTIFY THE RESIDENT ENGINEER IF THE CONTRACTOR DISCOVERS CONFLICTS OR IRREGULARITIES OF ANY SORT BETWEEN THE MANUFACTURER'S INSTALLATION INSTRUCTIONS AND THESE CONTRACT DOCUMENTS.

2. THE CONTRACTOR IS REQUIRED TO HAVE AN APPROVED CRASH END TREATMENT ON ALL GUARDRAIL ENDS IN ALL WORK AREAS AT THE END OF EACH DAY. THE CONTRACTOR SHALL ENSURE THAT ENOUGH TIME EXISTS IN THE WORK DAY TO COMPLETE ALL MODIFICATIONS AND/OR INSTALLATIONS TO END TERMINALS. THE CONTRACTOR SHALL ENSURE THAT ALL PARTS AND MANPOWER ARE ON-SITE PRIOR TO UNDERTAKING ANY GUARDRAIL MODIFICATIONS.

3. GUARDRAIL HEIGHT SHALL BE INSTALLED OR ADJUSTED TO 30" +0", -1/2" HEIGHT. GUARDRAIL HEIGHT SHALL BE MEASURED FROM THE EDGE OF PAVEMENT WHEN WITHIN 2 FEET. IF GUARDRAIL IS OFFSET FROM EDGE OF PAVEMENT GREATER THAN 2 FEET, THEN HEIGHT OF RAIL SHALL BE MEASURED AT GROUND ELEVATION ADJACENT TO EACH POST BELOW THE RAIL TO THE TOP OF GUARDRAIL AND AFTER FINAL GRADING OF SHOULDER.

4. THE CONTRACTOR SHALL REMOVE AND DISPOSE OF ALL CUT BOLTS, DISCARDED PARTS, TRASH, PAVEMENT DEBRIS, ETC., AFTER COMPLETING GUARDRAIL MODIFICATIONS AND/OR INSTALLATIONS.

5. CONNECTIONS FOR PROPOSED RAIL TO EXISTING RAIL SHALL BE INCIDENTAL TO THE INSTALLATION OF PROPOSED GUARDRAIL.

6. FLEAT 350 TERMINALS INSTALLED UNDER THIS CONTRACT SHALL BE INSTALLED AT A HEIGHT OF 27.5" AT THE TERMINAL HEAD AND TRANSITIONING UP TO THE REQUIRED HEIGHT OF RAIL OF 30" +0", -1/2" OVER A 25 LINEAR FOOT LENGTH. HEIGHT OF FLEAT 350 RAIL SHALL BE MEASURED FROM THE GROUND ELEVATION UNDER THE FLEAT RAIL PANELS TO THE TOP OF RAIL.

7. SOIL ANCHOR TUBES INSTALLED AS PART OF CAT, FLEAT OR TRAILING TERMINAL ENDS SHALL NOT PROTRUDE FROM THE GROUND MORE THAN 31/2". ADDITIONAL SITE GRADING MAY BE REQUIRED TO ADJUST SOIL TUBE REVEAL AND IF REQUIRED SHALL NOT DIRECT STORMWATER SURFACE DRAINAGE TOWARDS THE SHOULDER OR TRAVEL WAY. ADDITIONAL SITE GRADING SHALL BE INCIDENTAL TO THE END TERMINAL INSTALLATION.

8. TRANSITION RAIL HEIGHT ON TERMINAL END-ANCHORED ENDS FROM 271/2" AT THE END OF THE RAIL TO 30" HEIGHT OVER A 25 LINEAR FOOT LENGTH.

EROSION

1. EROSION CONTROL BLANKET SHALL BE INSTALLED ON ALL DISTURBED 2:1 SLOPES AND IN FLOW LINE OF ALL DISTURBED DITCHES AFTER LOAM AND SEED HAVE BEEN INSTALLED.

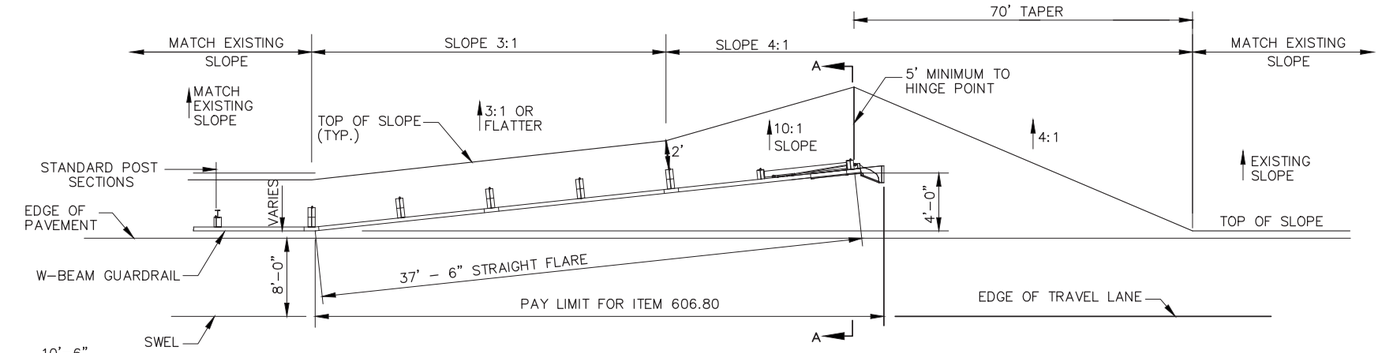

WIDEN SHOULDER FOR GUARDRAIL 350 FLARED TERMINAL - ITEM 606.754
PLAN
N.T.S.

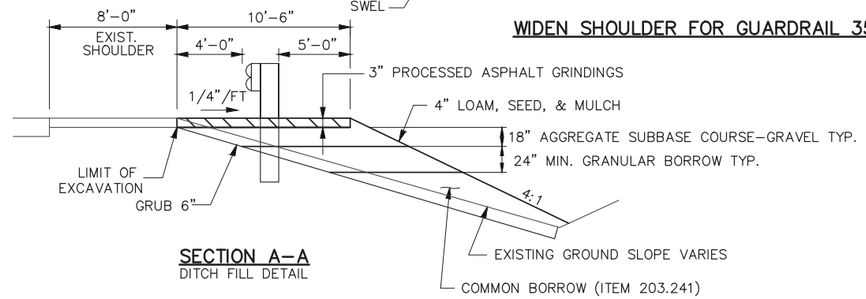

SECTION A-A
DITCH FILL DETAIL

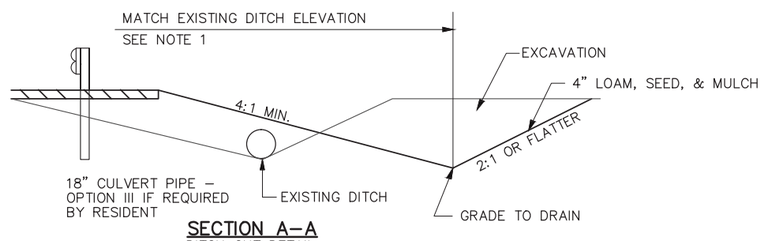

SECTION A-A
DITCH CUT DETAIL

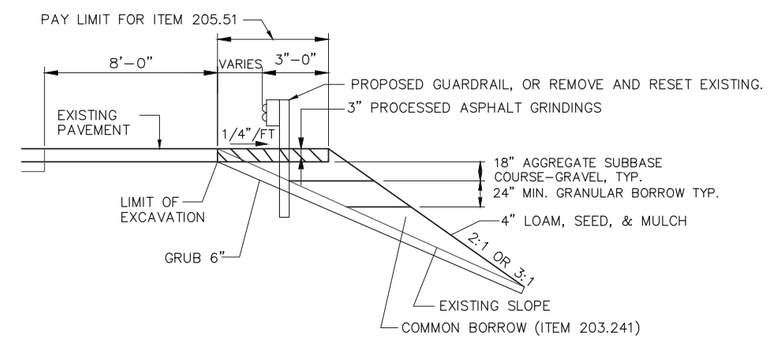

SHOULDER WIDENING DETAIL - ITEM 205.51

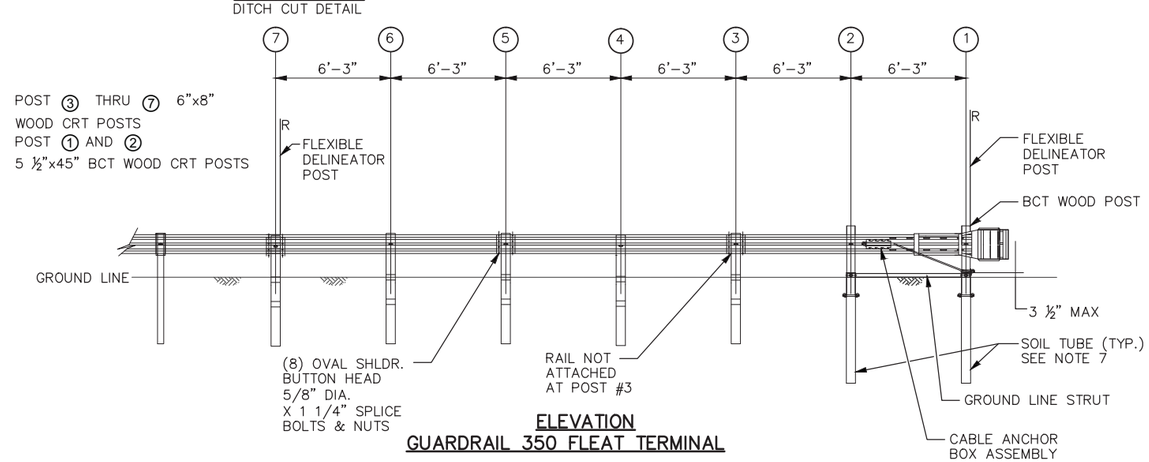

ELEVATION
GUARDRAIL 350 FLEAT TERMINAL

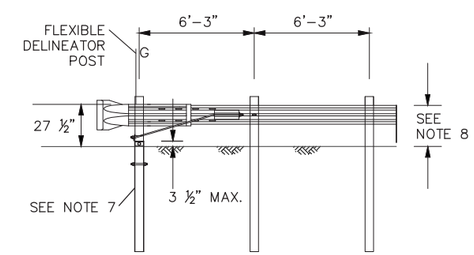

TERMINAL END - ANCHORED END
(ITEM 606.278)
N.T.S.

Scale: NOT TO SCALE			
No.	Revision	By	Date

Designed by:

	By	Date		By	Date
Designed	BAT	01/08/2015	Checked	BAT	01/08/2015
Drawn	BMB	01/08/2015	In Charge of	SRT	01/08/2015

MAINE TURNPIKE AUTHORITY
2360 Congress Street
Portland, ME 04102
TEL (207) 871-7771
FAX (207) 879-5567

THE GOLD STAR MEMORIAL HIGHWAY

MTA PROJECT MANAGER: Joseph R. Leavitt, P.E.

PAVEMENT REHABILITATION
CLEAR ZONE IMPROVEMENTS

GUARDRAIL GENERAL NOTES AND DETAILS

SHEET NUMBER: G-1

CONTRACT: 2015.02

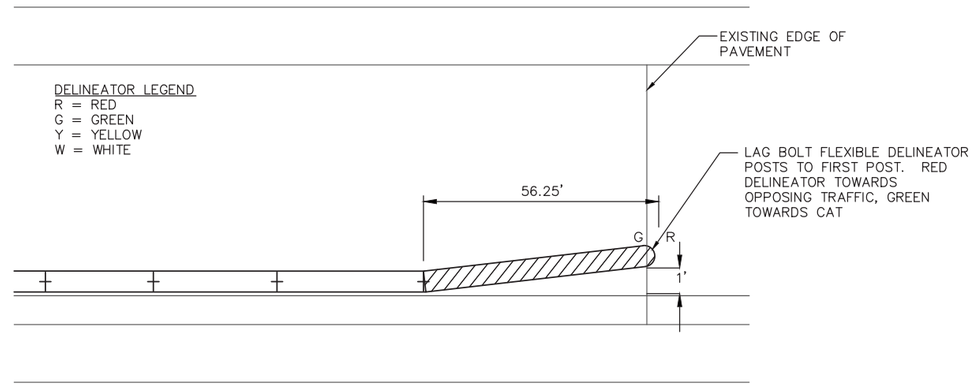

CAT INSTALLATION DETAIL

NOTES:

1. THE NEW CAT SYSTEM INCLUDES 31.25 FEET OF ENERGY ABSORBING SYSTEM AND 25 FEET OF TYPE 3D MODIFIED DOUBLE RAIL.
2. THE ENTIRE 56.25' OF THE CAT SYSTEM SHALL BE ON THE SAME CONTINUOUS TANGENT.
3. THE LEADING END OF THE CAT SHALL BE NO CLOSER THAN 1 FOOT FROM THE TANGENT LINE CREATED BY THE DOUBLE RAIL PRIOR TO THE CAT SYSTEM.

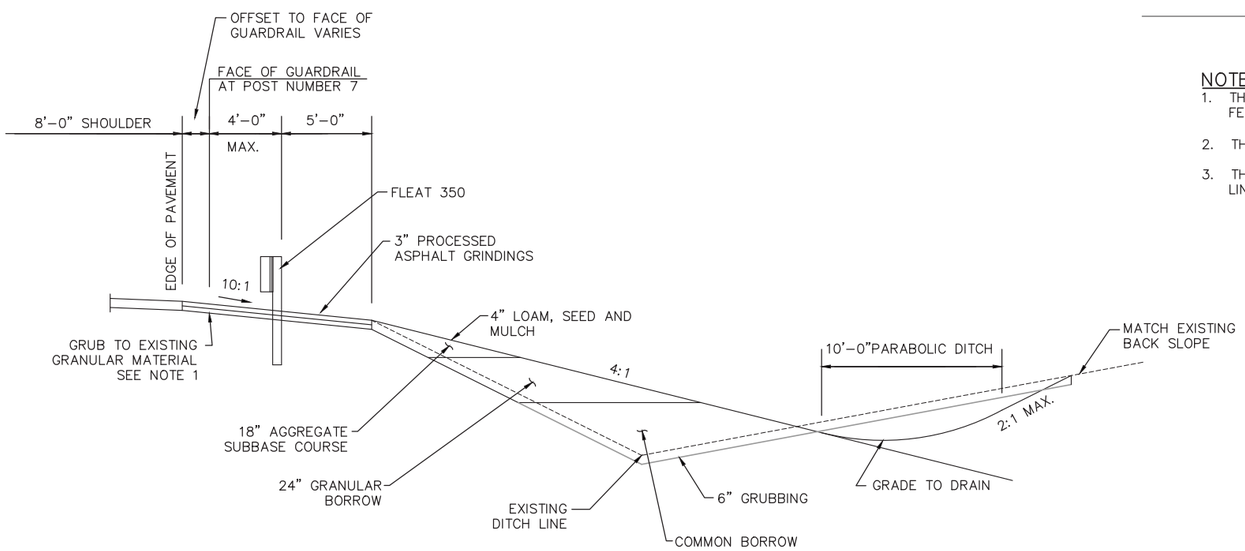

MODIFY SHOULDER WIDENING FOR GUARDRAIL 350 FLARED TERMINAL (ITEM 606.755)

N.T.S.

NOTES:

1. GRUB TOP OF EXISTING SHOULDER WIDENING DOWN TO GRANULAR SUBBASE MATERIAL MINIMUM 3" BELOW EDGE OF PAVEMENT AND COMPACT. PLACE ADDITIONAL AGGREGATE SUBBASE COURSE AND COMPACT IF GRUBBING MORE THAN 3" BELOW EDGE OF PAVEMENT.

Scale: NOT TO SCALE

No.	Revision	By	Date

Designed by:

	By	Date		By	Date
Designed	BAT	01/08/2015	Checked	BAT	01/08/2015
Drawn	BMB	01/08/2015	In Charge of	SRT	01/08/2015

MAINE TURNPIKE AUTHORITY
2360 Congress Street
Portland, ME 04102
TEL (207) 871-7771
FAX (207) 879-5567

THE GOLD STAR MEMORIAL HIGHWAY

MTA PROJECT MANAGER: Joseph R. Leavitt, P.E.

PAVEMENT REHABILITATION
CLEAR ZONE IMPROVEMENTS

GUARDRAIL DETAILS

SHEET NUMBER: G-2

CONTRACT: 2015.02

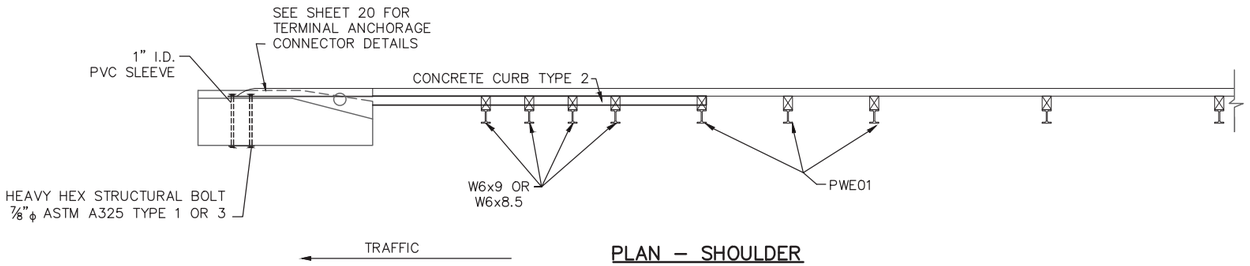

PLAN – SHOULDER

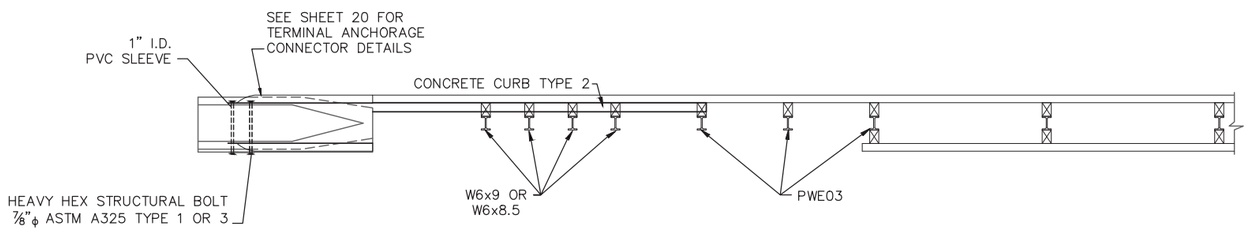

PLAN – MEDIAN

MEDIAN AND SHOULDER TYPE III BRIDGE TRANSITION

N.T.S.

6'–0" POSTS

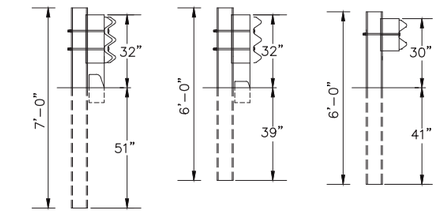

SECTION A–A N.T.S. SECTION B–B N.T.S. SECTION C–C N.T.S.

6'–6" POSTS

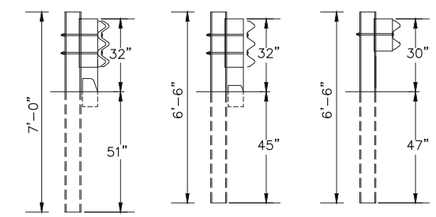

SECTION A–A N.T.S. SECTION B–B N.T.S. SECTION C–C N.T.S.

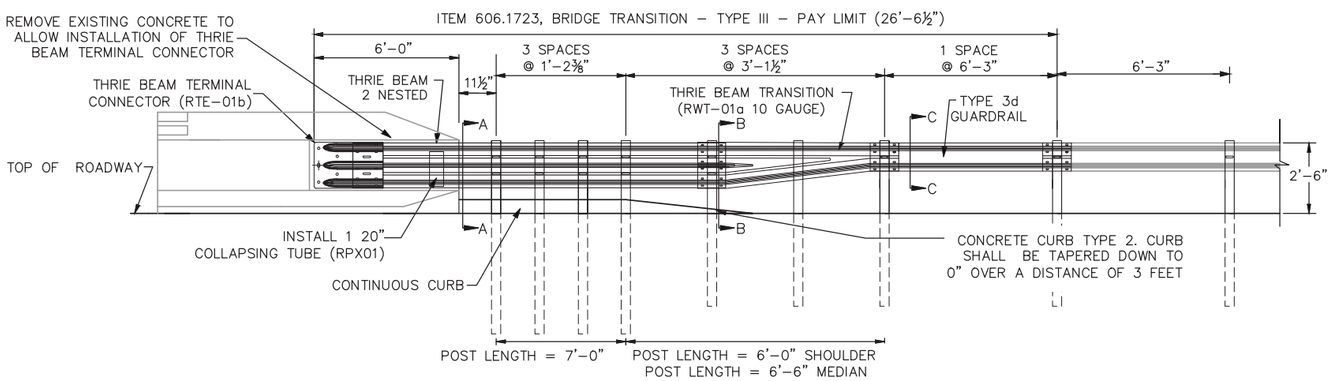

ITEM 606.1723 BRIDGE TRANSITION – TYPE III

THRIE BEAM BRIDGE ATTACHMENT AT APPROACH END POSTS

N.T.S.

GENERAL NOTES:

1. ADDITIONAL HOLES MAY BE MADE IN THE THRIE–BEAM PANELS BY DRILLING, PUNCHING, OR OTHER MEANS THAT PRODUCE A NEAT, CLEAN HOLE. BURNING HOLES WILL NOT BE ALLOWED.
2. THRIE BEAM SHALL BE PLACED WITH THE COMPOSITE BLOCKOUT FACE IN FRONT OF OR DIRECTLY ABOVE THE CURB FACE.
3. RAIL ELEMENT SHALL MEET ALL REQUIREMENTS OF AASHTO M–180 EXCEPT AS MODIFIED ON THE PLANS. THE THRIE BEAM TRANSITION TO W–BEAM SHALL BE OF THE SAME MATERIAL, BUT SHALL NOT BE LESS THAN 10 GAUGE.
4. AFTER INSTALLATION IS COMPLETE, UPSET THE THREAD ON THE ANCHOR BOLTS IN THREE PLACES AROUND EACH BOLT, AT THE JUNCTION OF THE NUT AND THE EXPOSED THREAD, WITH A CENTER PUNCH OR SIMILAR TOOL.
5. STANDARD BARRIER HARDWARE HAS BEEN USED TO DEVELOP THESE GUARDRAIL ATTACHMENTS. DESIGNATIONS PROVIDED IN PARENTHESIS RELATE TO STANDARD ELEMENTS DETAILED IN "A GUIDE TO STANDARDIZED BARRIER RAIL HARDWARE." 1979. AASHTO–AGC–ARTBA JOINT COOPERATE COMMITTEE.
6. 1" HOLE IN CONCRETE SHALL BE FORMED BY A METHOD APPROVED BY THE ENGINEER.
7. THRIE BEAM BRIDGE ATTACHMENT SHALL HAVE 3" x7/8" SLOTS AT THE FIRST BOLT CONNECTIONS ON THE BRIDGE DECK. THE THREADS ON THE BOLTS AT THE SLOTS SHALL BE UPSET AT THE JUNCTION OF THE NUT WITH A CENTER PUNCH OR SIMILAR TOOL.
8. EXISTING ANCHOR STUDS MAY BE UTILIZED TO FASTEN THRIE BEAM TERMINAL CONNECTOR TO END WALL. REMOVE EXISTING ANCHOR STUDS TO ALLOW INSTALLATION AS REQUIRED. INSTALL NEW ANCHOR BOLTS AS PER PLANS AND AS REQUIRED.

Scale: NOT TO SCALE

No.	Revision	By	Date

Designed by:

	By	Date		By	Date
Designed	BAT	01/08/2015	Checked	BAT	01/08/2015
Drawn	BMB	01/08/2015	In Charge of	SRT	01/08/2015

MAINE TURNPIKE AUTHORITY
2360 Congress Street
Portland, ME 04102
TEL (207) 871–7771
FAX (207) 879–5567

THE GOLD STAR MEMORIAL HIGHWAY

MTA PROJECT MANAGER: Joseph R. Leavitt, P.E.

PAVEMENT REHABILITATION
CLEAR ZONE IMPROVEMENTS

GUARDRAIL DETAILS
BRIDGE TRANSITIONS – TYPE III

SHEET NUMBER: G–3

CONTRACT: 2015.02

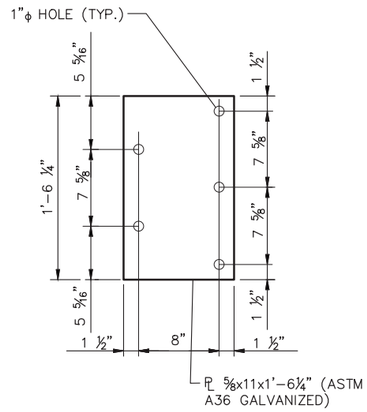

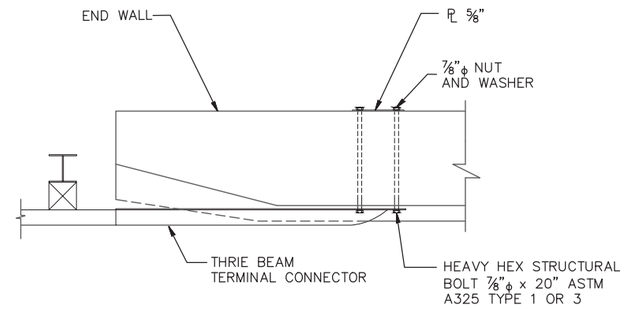

TERMINAL CONNECTOR ANCHORAGE

N.T.S.

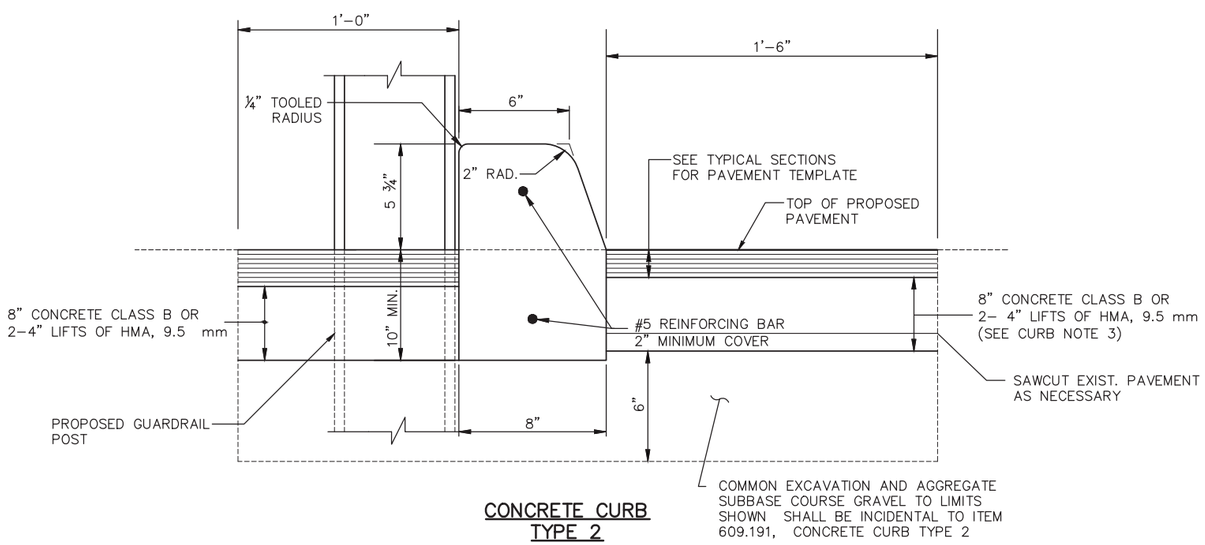

CONCRETE CURB TYPE 2

CURB NOTES:

1. CURBING SHALL BE EITHER PRECAST CONCRETE, CAST-IN-PLACE CONCRETE OR GRANITE TO MEET DIMENSIONS SHOWN ON THE PLANS. CURBING SHALL BE PAID UNDER ITEM 609.191 CONCRETE CURB TYPE 2.
2. CONCRETE CURBS USED IN CONJUNCTION WITH THRIE-BEAM BRIDGE ATTACHMENT SHALL BE TYPE 2. SEE DETAILS THIS SHEET. CONCRETE CURBS SHALL BE CONTINUOUS WITHOUT DRAINAGE CUTS.
3. CURB TRANSITIONS SHALL BE INCLUDED FOR PAYMENT UNDER ITEM 609.191 CONCRETE CURB TYPE 2.
4. SAWCUTTING EXISTING PAVEMENT CONCRETE FILL AND PAVEMENT TO LIMITS SHOWN SHALL BE INCIDENTAL TO ITEM 609.191.

Scale: NOT TO SCALE

No.	Revision	By	Date

Designed by:

	By	Date		By	Date
Designed	BAT	01/08/2015	Checked	BAT	01/08/2015
Drawn	BMB	01/08/2015	In Charge of	SRT	01/08/2015

MAINE TURNPIKE AUTHORITY
2360 Congress Street
Portland, ME 04102
TEL (207) 871-7771
FAX (207) 879-5567

MAINE TURNPIKE

THE GOLD STAR MEMORIAL HIGHWAY

MTA PROJECT MANAGER: Joseph R. Leavitt, P.E.

PAVEMENT REHABILITATION
CLEAR ZONE IMPROVEMENTS

GUARDRAIL DETAILS
BRIDGE TRANSITIONS – TYPE III

SHEET NUMBER: G-4

CONTRACT: 2015.02

MEDIAN SCHEDULE OF GUARDRAIL IMPROVEMENTS

LOCATION OF WORK																			
		EXISTING		PROPOSED															
MILE MARKER	LOCATION DESCRIPTION	APPROX. STATION	APPROX. STATION of TERMINAL END or ENDPOST	STATION LEADING END	STATION TRAILING END	ITEM 527.30 CAT CRASH END - NEW	ITEM 606.178 GUARDRAIL BEAM	ITEM 606.2652 TERMINAL END - REMOVE & STACK	ITEM 606.278 TERMINAL END- ANCHORED END	ITEM 606.353 DELINEATOR POST	ITEM 606.355- DELINEATOR POST - REMOVE AND STACK	ITEM 606.3621 GUARDRAIL ADJUST - SINGLE RAIL	ITEM 606.3622 GUARDRAIL ADJUST - DOUBLE RAIL	ITEM 606.471 SINGLE OFFSET BLOCK - W BEAM	ITEM 606.48 SINGLE GALVANIZED STEEL POST	ITEM 606.701 ASYMMETRICAL THRIE BEAM TRANSITION	ITEM 606.1725 THRIE BEAM BRIDGE ATTACHMENT- TYPE III	ITEM 606.82 REMOVE AND STACK EXISTING CRASH END	DESCRIPTION OF WORK
67.1	SIGN GANTRY	3388+25	3388+65	3388+25	3388+65							75.0	ALL LOCATIONS SEE NOTE 4						See Installation Note 1 and Note 2.
67.5	MAYALL ROAD	3399+25	3400+50	3399+25	3400+50			1	1	4	4	275.0							See Installation Note 1 and Note 2. Replace existing Delineators with New Flexible Delineators at the crash ends and on the median transition rail.
67.8	MEDIAN OPENING	3415+85	3416+55	3415+85	3416+55					2	2								Replace Delineators on CAT Crash Ends.
68.2	BENNETT ROAD	3460+05	3461+10	3459+92.5	3461+22.5			2	2	4	4	100.0		4	4				See Installation Note 1 and Note 2. Repair damaged Galvanised Posts and Offset Blocks.
70.2	CHANDLER MILL ROAD	3539+10	3540+25	3538+97.5	3540+37.5			2	2	2	2	250.0							See Installation Note 1 and Note 2.
70.8	SNOW HILL ROAD	3573+00	3574+25	3572+87.5	3574+37.5			2	2	4	4	125.0							See Installation Note 1 and Note 2.
71.1	ROYAL RIVER	3590+50	3591+50	3590+50	3591+50					2	2						2		Install Type III Bridge Connections on both bounds
71.6	BALD HILL	3616+75	3618+50	3616+75	3618+50											2			Replace existing Thrie Beam Panels with New Asymmetrical Panels.
72.0	MEDIAN CROSSOVER	3635+00	3635+75	3635+00	3635+75	2				6	6							2	Replace existing FLEAT MT crash ends with NEW CATs (2). Replace existing Delineators with New Flexible Delineators at the crash ends and on the median transition rail.
74.0	RTE. 122	3735+50	3736+60	3735+37.5	3736+72.5			2	2	6	6	250.0							See Installation Note 1 and Note 2.
74.5	MAINE CENTRAL RR OVERPASS	3758+25	3760+00	3758+25	3760+00					2	2					2			Replace existing Delineators and Replace existing Thrie Beam Panels with New Asymmetrical Panels.
75.0	KITTYHAWK AVE	3783+15	3741+00	3783+02.5	3741+12.5			2	2	4	4	275.0							See Installation Note 1 and Note 2.
67.1 - 75.3	MEDIAN GUARD RAIL	3384+00	3798+75	3384+00	3798+75			2	2	6	6	550.0	39,925						Adjust all Double Median Rail to 30-inch height.
					TOTAL	2	375	13	13	42	42	1,900	39,925	4	4	4	2	2	
					UNIT	EA	LF	EA	EA	EA	EA	LF	LF	EA	EA	EA	EA	EA	

GENERAL NOTES:
1 - APPROXIMATE STATION IS THE LEADING END OF THE EXISTING TWISTED END, MELT, FLEAT 350 OR BRIDGE ENDPOST WHEN EXITING, PRIOR TO PROPOSED WORK.
2 - REPAIR DAMAGED GUARDRAIL BEAMS AS INDICATED OR AS DIRECTED BY THE RESIDENT ENGINEER.
3 - REPLACE ALL RIGID GUARDRAIL DELINEATOR POSTS WITH FLEXIBLE DELINEATORS.

INSTALLATION NOTES:
1 - ADJUST ALL GUARDRAIL TO 30-INCH ABOVE EDGE OF PAVEMENT AS REQUIRED OR AS DIRECTED BY THE RESIDENT.
2 - REMOVE EXISTING END SECTION AND STACK; INSTALL ANCHORED TRAILING END.
3 - INSTALL ADDITIONAL GALVANIZED POSTS AND NEW OFFSET BLOCKS TO RAIL ALONG FACE OF BRIDGE PIER AND A MINIMUM OF 25 FEET EITHER SIDE OF PIER TO REDUCE POST SPACING TO 3.125-FEET.
4 - BEGIN MEDIAN RAIL ADJUSTMENTS AT STATION 3384+00 AND END AT STATION 3798+60.

Scale: NOT TO SCALE

No.	Revision	By	Date

Designed by:

	By	Date		By	Date
Designed	BAT	01/08/2015	Checked	GJO	01/08/2015
Drawn	BMB	01/08/2015	In Charge of	SRT	01/08/2015

MAINE TURNPIKE AUTHORITY
2360 Congress Street
Portland, ME 04102
TEL (207) 871-7771
FAX (207) 879-5567

THE GOLD STAR MEMORIAL HIGHWAY

MTA PROJECT MANAGER: Joseph R. Leavitt, P.E.

PAVEMENT REHABILITATION
CLEAR ZONE IMPROVEMENTS

GUARDRAIL MEDIAN SCHEDULE

SHEET NUMBER: G-5

CONTRACT: 2015.02

NORTHBOUND SCHEDULE OF SHOULDER GUARDRAIL IMPROVEMENTS

LOCATION OF WORK																								ITEM 205.51 WIDEN SHOULDER TRAILING END			
		EXISTING		PROPOSED																							
MILE MARKER	LOCATION DESCRIPTION	APPROX. STATION	APPROX. STATION OF TERMINAL END OR ENDPOST	STATION LEADING END	STATION TRAILING END	ITEM 606.178 GUARDRAIL BEAM	ITEM 606.24 GUARDRAIL TYPE 3d- SINGLE RAIL	ITEM 606.2652 TERMINAL END - REMOVE & STACK	ITEM 606.278 TERMINAL END- ANCHORED END	ITEM 606.353 DELINEATOR POST	ITEM 606.355 - DELINEATOR POST - REMOVE AND STACK	ITEM 606.3605 REMOVE, MODIFY and RESET SINGLE RAIL	ITEM 606.3621 GUARDRAIL ADJUST - SINGLE RAIL	ITEM 606.3631 - GUARDRAIL REMOVE & DISPOSE	ITEM 606.471 SINGLE OFFSET BLOCK - W BEAM	ITEM 606.47 SINGLE WOODEN POST	ITEM 606.48 SINGLE GALVANIZED STEEL POST	ITEM 606.701 ASYMMETRICAL THRIE BEAM TRANSITION	ITEM 606.754 WIDEN SHOULDER FOR GUARDRAIL 350 FLARED TERMINAL	ITEM 606.755 MODIFY WIDEN SHOULDER FOR GUARDRAIL 350 FLARED TERMINAL	ITEM 606.80 GUARDRAIL 350 FLARED TERMINAL	ITEM 606.1725 THRIE BEAM BRIDGE ATTACHMENT- TYPE III	ITEM 606.82 REMOVE AND STACK EXISTING CRASH END	BEGIN STATION	END STATION	QUANTITY	DESCRIPTION OF WORK
68.1	NORTHBOUND SHOULDER	3434+70	3437+50	3434+70	3437+62.5	50.0		1	1	2	3		325.0						1								See Installation Note 1 and Note 2.
68.6	BENNETT ROAD	3459+40	3461+10	3459+40	3461+22.5			1	1	2	2				5	1								3461+10	3461+30	15.0	See Installation Note 2. Replace Post #7 with wooden BCT Post. Adjust FLEAT 350 height to 27.5"
69.1	NORTHBOUND SHOULDER	3481+80	3483+60	3481+80	3483+72.5			1	1	2	2								1					3483+60	3483+80	15.0	See Installation Note 2.
69.2	NORTHBOUND SHOULDER	3492+55	3495+05	3492+55	3495+17.5	62.5		1	1	2	2								1					3495+05	3495+25	15.0	See Installation Note 2.
70.2	CHANDLER MILL ROAD	3538+00	3541+25			25.0		1	1	2	2								1					3541+25	3541+40	15.0	See Installation Note 2.
70.3	NORTHBOUND SHOULDER	3547+55	3550+00	3547+55	3550+12.5			1	1	2	2		250.0		40				1					3550+00	3550+15	15.0	See Installation Notes 1 and Note 2. Replace all existing Spacer Blocks with New Composite Spacer Blocks.
70.8	SNOW HILL ROAD	3572+20	3574+35	3572+20	3574+47.5			1	1	2	2								1								See Installation Note 2.
71.1	ROYAL RIVER	3588+60	3590+50	3588+60	3590+50					2	2								1			1					See Installation Note 2. Modify Bridge End Post connection by installing Thie Beam Bridge Attachment -Type III.
71.6	BALD HILL	3614+30	3616+85	3614+30	3616+85					2	2								1								Replace existing Guardrail Delineators with New Guardrail Delineators.
72.0	NORTHBOUND SHOULDER	3638+30	3647+00	3638+30	3647+12.5			1	1	2	1		875.0						1					3647+00	3647+15	15.0	See Installation Note 1 and Note 2.
72.5	NORTHBOUND SHOULDER	3649+90	3660+30	3649+90	3660+42.5	50.0		1	1	3	3													3660+30	3660+45	15.0	See Installation Note 2.
72.7	NORTHBOUND SHOULDER	3666+50	3666+90	3666+50	3667+02.5			1	1	2	2													3666+90	3667+05	15.0	See Installation Note 2.
72.8	NORTHBOUND SHOULDER	3669+90	3673+00	3669+90	3673+12.5			1	1	2	2		312.5											3673+00	3673+15	15.0	See Installation Note 1 and Note 2.
73.2	NORTHBOUND SHOULDER	3675+70	3685+00	3675+70	3690+25	50.0	525.0	1		1	2		937.5						1								See Installation Note 1. Extend Trailing End to STA 3690+25.
73.5	NORTHBOUND SHOULDER	3690+25	3705+00	3690+25	3705+12.5			1	1	2	2		1,475.0										1				See Installation Note 1 and Note 2. Remove and Stack existing Leading Crash End.
74.0	RTE. 122	3734+40	3736+50	3733+77.5	NA		175.0	1		2	2	50.0		25.0					1		1						Widen shoulder on Leading End and install New FLEAT 350. See Installation Note 2. Connect Trailing End to existing guard rail at STA 3737+60.
74.1	NORTHBOUND SHOULDER	3737+60	3739+50	N/A	3739+62.5		25.0	1	1	1	2	62.5		25.0										3739+50	3739+65	15.0	Remove Twisted End treament and replace with New 3-d Guard Rail. RMR additional 62.5 LF of Type 3-d Guardrail. See Installation Note 2.
74.3	NORTHBOUND SHOULDER	3748+60	3772+60	3748+47.5	3772+72.5		25.0	1	1	3	1		2,400.0	25.0				2	1		1			3772+60	3772+75	15.0	Widen shoulder on Leading End and install New FLEAT 350. Replace existing Delineators and Replace existing Thrie Beam Panels with New Asymmetrical Panels. See Installation Note 1 and Note 2.
74.8	NORTHBOUND SHOULDER	3776+00	3782+50	3775+62.5	3783+25		100.0	1	1	3	2	50.0		25.0					1		1			3782+50	3783+25	75.0	Remove Twisted End treament and replace with New 3-d Guard Rail. Widen shoulder on Leading End and install New FLEAT 350. Extend Trailing End 75 LF. See Installation Note 2.
					TOTAL	237.5	850.0	17	15	39	38	162.5	6,575.0	100.0	45	1	0	2	3	10	3	1	1			240.0	
					UNIT	LF	LF	EA	EA	EA	EA	LF	LF	LF	EA	EA	EA	EA	EA	EA	EA	EA	EA			LF	

GENERAL NOTES:
1 - APPROXIMATE STATION IS THE LEADING END OF THE EXISTING TWISTED END, MELT, OR BRIDGE ENDPOST WHEN EXITING, PRIOR TO PROPOSED WORK.
2 - FOR ITEM 205.51 SHOULDER WIDENING, WIDEN SHOULDER AS INDICATED ON ABOVE SCHEDULE OR AS DIRECTED BY THE RESIDENT ENGINEER.
3 - REPAIR DAMAGED GUARDRAIL BEAMS AS INDICATED OR AS DIRECTED BY THE RESIDENT ENGINEER.
4 - REPLACE ALL RIGID GUARDRAIL DELINEATOR POSTS WITH FLEXIBLE DELINEATORS.
5 - INDICATED INSTALLATION LOCATION OF FLEAT UNITS REFERS TO LOCATION OF THE FLEAT CRASH HEAD.

INSTALLATION NOTES:
1 - ADJUST ALL GUARDRAIL TO 30-INCH ABOVE EDGE OF PAVEMENT AS REQUIRED OR AS DIRECTED BY THE RESIDENT.
2 - REMOVE EXISTING END SECTION AND STACK; INSTALL ANCHORED TRAILING END.
3 - INSTALL ADDITIONAL GALVANIZED POSTS AND NEW OFFSET BLOCKS TO RAIL ALONG FACE OF BRIDGE PIER AND A MINIMUM OF 25 FEET EITHER SIDE OF PIER TO REDUCE POST SPACING TO 37.5-INCHES.

Scale:

No.	Revision	By	Date

Designed by:

MAINE TURNPIKE

	By	Date		By	Date
Designed	BAT	01/08/2015	Checked	GJO	01/08/2015
Drawn	BMB	01/08/2015	In Charge of	SRT	01/08/2015

MAINE TURNPIKE AUTHORITY
2360 Congress Street
Portland, ME 04102
TEL (207) 871-7771
FAX (207) 879-5567

MAINE TURNPIKE

THE GOLD STAR MEMORIAL HIGHWAY

MTA PROJECT MANAGER: Joseph R. Leavitt, P.E.

PAVEMENT REHABILITATION
CLEAR ZONE IMPROVEMENTS

SCHEDULE OF GUARDRAIL LIMITS
OUTSIDE SHOULDER – NORTHBOUND

SHEET NUMBER: G-6

CONTRACT: 2015.02

SOUTHBOUND SCHEDULE OF OUTSIDE SHOULDER WORK

MILE MARKER	LOCATION DESCRIPTION	LOCATION OF WORK Existing APPROX. STATION	LOCATION OF WORK Existing APPROX. STATION of TERMINAL END or ENDPOST	LOCATION OF WORK Proposed STATION LEADING END	LOCATION OF WORK Proposed STATION TRAILING END	ITEM 606.178 GUARDRAIL BEAM	ITEM 606.24 GUARDRAIL TYPE 3d-SINGLE RAIL	ITEM 606.2652 TERMINAL END - REMOVE & STACK	ITEM 606.278 TERMINAL END-ANCHORED END	ITEM 606.353 DELINEATOR POST	ITEM 606.355 - DELINEATOR POST - REMOVE AND STACK	ITEM 606.3605 REMOVE, MODIFY and RESET SINGLE RAIL	ITEM 606.3621 GUARDRAIL ADJUST - SINGLE RAIL	ITEM 606.3631 - GUARDRAIL REMOVE & DISPOSE	ITEM 606.471 SINGLE OFFSET BLOCK - W BEAM	ITEM 606.48 SINGLE GALVANIZED STEEL POST	ITEM 606.701 ASYMMETRICAL THRIE BEAM TRANSITION	ITEM 606.1725 THRIE BEAM BRIDGE ATTACHMENT-TYPE III	ITEM 606.754 WIDEN SHOULDER FOR GUARDRAIL 350 FLARED TERMINAL	ITEM 606.755 MODIFY WIDEN SHOULDER FOR GUARDRAIL 350 FLARED TERMINAL	ITEM 606.80 GUARDRAIL 350 FLARED TERMINAL	ITEM 606.83 REMOVE MODIFY AND RESET GUARDRAIL 350 FLARED TERMINAL	ITEM 205.51 WIDEN SHOULDER TRAILING END BEGIN STATION	ITEM 205.51 WIDEN SHOULDER TRAILING END END STATION	ITEM 205.51 WIDEN SHOULDER TRAILING END QUANTITY	DESCRIPTION OF WORK
75.0	EXIT 75 SOUTHBOUND ENTERING	3783+15	3768+55	3783+15	3768+67.5			1	1	2	2		1,487.5										3768+55	3768+40	15.0	See Installation Note 1 and Note 2.
74.5	MAINE CENTRAL RR OVERPASS	3763+10	3749+50	3763+22.5	3749+62.5	50.0	25.0	1	1	3	2	62.5	1,210.0	25.0		2		1		1					15.0	Widen shoulder on Leading End and install New FLEAT 350. See Installation Note 1 and Note 2.
74.0	RTE. 122	3737+75	3736+45	3738+37.5	3736+07.5		75.0	1	1	3	2			25.0				1		1						R/S Twisted End and replace 25.0 LF of Type 3-d Guard Rail. Extend Leading End 25.0 LF, widen shoulder and install New FLEAT 350. Extend Trailing End 25.0 LF then install Anchored Trailing End.
73.7	SOUTHBOUND SHOULDER	3722+00	3713+00	3722+00	3713+12.5			1	1	2	2								1				3713+00	3712+85	15.0	See Installation Note 2.
73.0	SOUTHBOUND SHOULDER	3681+25	3678+50	3681+25	3678+62.5			1	1	2	2		237.5										3678+50	3678+35	15.0	See Installation Note 1 and Note 2.
72.8	SOUTHBOUND SHOULDER	3672+75	3670+40	3672+75	3670+52.5			1	1	2	2								1				3670+40	3670+25	15.0	See Installation Note 2.
72.7	SOUTHBOUND SHOULDER	3667+40	3663+25	3667+40	3662+87.5		25.0	1	1	2	2												3663+25	3662+85	40.0	Extend Trailing End 25.o LF. See Note 2.
72.4	SOUTHBOUND SHOULDER	3657+05	3650+75	3657+05	3650+62.5			1	1	2	2		600.0						1				3650+75	3650+60	15.0	See Installation Note 1 and Note 2.
72.0	SOUTHBOUND SHOULDER	3645+75	3637+50	3645+75	3637+37.5			1	1	2	2		787.5						1				3637+50	3637+35	15.0	See Installation Note 1 and Note 2.
71.6	BALD HILL ROAD	3620+45	3618+45	3620+45	3618+45					1	1		150.0				1									See Installation Note 1 and Note 2.
71.4	SOUTHBOUND SHOULDER	3602+60	3597+60	3602+60	3597+47.5			1	1	2	2		450.0						1				3597+60	3597+45	15.0	See Installation Note 1 and Note 2.
71.1	ROYAL RIVER	3593+60	N/A	3593+60	N/A					2								1		1						Replace existing Thrie Beam Panel with New Asymmetrical.
70.8	SNOW HILL ROAD	3574+90	3572+75	3575+15	3572+62.5		25.0	1	1	3	3				36	14		1			1	3572+75	3572+60	15.0	Remove FLEAT 350, extend Leading End with 25.0 LF of Type 3-d Guard Rail, and reinstall FLEAT 350. Reinforce at Bridge Pier and replace all existing Spacer Blocks with New Spacer Blocks.
70.5	SOUTHBOUND SHOULDER	3559+40	3548+95	3559+40	3548+87.5			1	1	2	2		1,045.0						1				3548+95	3548+80	15.0	See Installation Note 1 and Note 2.
70.2	CHANDLER MILL ROAD	3542+35	3540+15	3542+60	3540+02.5		25.0	1	1	3	3				36	14		1			1					Remove FLEAT 350, extend Leading End with 25.0 LF of Type 3-d Guard Rail, and reinstall FLEAT 350. Reinforce at Bridge Pier and replace all existing Spacer Blocks with New Spacer Blocks.
69.3	SOUTHBOUND SHOULDER	3496+50	3494+25	3496+50	3494+12.5	25.0		1	1	2	2								1				3494+25	3494+10	15.0	See Installation Note 2.
69.1	SOUTHBOUND SHOULDER	3484+60	3482+50	3484+60	3482+37.5	25.0		1	1	2	2								1						15.0	See Installation Note 2.
68.6	BENNETT ROAD	3462+00	3460+00	3462+25	3460+00		25.0	1	1	3	3			12.5				1			1					Remove FLEAT 350, extend Leading End with 25.0 LF of Type 3-d Guard Rail, and reinstall FLEAT 350. Remove 12.5 LF of Type 3-d Guard Rail and replace with Anchored Trailing End.
68.2	SOUTHBOUND SHOULDER	3438+10	3435+45	3438+10	3435+32.5			1	1	2	2															See Installation Note 2.
67.7	SOUTHBOUND SHOULDER	3413+75	3412+75	3413+75	3412+75								62.5													See Installation Note 1.
67.3	SOUTHBOUND SHOULDER	3390+50	3388+40	3390+50	3388+40	25.0							175.0													See Installation Note 1.
					TOTAL	100.0	200.0	17	17	42	38	62.5	5967.5	62.5	72	28	3	1	5	9	2	3			220.0	
					UNIT	LF	LF	EA	EA	EA	EA	LF	LF	LF	EA	EA	EA	EA	EA	EA	EA	EA			LF	

GENERAL NOTES:
1 - APPROXIMATE STATION IS THE LEADING END OR TRAILING END OF THE EXISTING TWISTED END, MELT, FLEAT, OR BRIDGE ENDPOST WHEN EXITING, PRIOR TO PROPOSED WORK.
2 - FOR ITEM 205.51 SHOULDER WIDENING, WIDEN SHOULDER AS INDICATED ON ABOVE SCHEDULE OR AS DIRECTED BY THE RESIDENT ENGINEER.
3 - REPAIR DAMAGED GUARDRAIL BEAMS AS INDICATED OR AS DIRECTED BY THE RESIDENT ENGINEER.
4 - REPALCE ALL RIGID GUARDRAIL DELINEATOR POSTS WITH FLEXIBLE DELINEATORS.
5 - INDICATED INSTALLATION LOCATION OF GUARDRAIL 350 FLEAT UNITS REFERS TO LOCATION OF THE FLEAT CRASH HEAD.

INSTALLATION NOTES (SITE SPECIFIC):
1 - ADJUST ALL GUARDRAIL TO 30-INCH ABOVE EDGE OF PAVEMENT AS REQUIRED OR AS DIRECTED BY THE RESIDENT.
2 - REMOVE EXISTING END SECTION AND STACK; INSTALL ANCHORED TRAILING END.
3 - INSTALL ADDITIONAL GALVANIZED POSTS AND NEW OFFSET BLOCKS TO RAIL ALONG FACE OF BRIDGE PIER AND A MINIMUM OF 25 FEET EITHER SIDE OF PIER TO REDUCE POST SPACING TO 37.5-INCHES.

Scale:

No.	Revision	By	Date

Designed by:

MAINE TURNPIKE

	By	Date		By	Date
Designed	BAT	01/08/2015	Checked	GJO	01/08/2015
Drawn	BMB	01/08/2015	In Charge of	SRT	01/08/2015

MAINE TURNPIKE AUTHORITY
2360 Congress Street
Portland, ME 04102
TEL (207) 871-7771
FAX (207) 879-5567

MAINE TURNPIKE

THE GOLD STAR MEMORIAL HIGHWAY

MTA PROJECT MANAGER: Joseph R. Leavitt, P.E.

PAVEMENT REHABILITATION
CLEAR ZONE IMPROVEMENTS

SCHEDULE OF GUARDRAIL LIMITS
OUTSIDE SHOULDER – SOUTHBOUND

SHEET NUMBER: G-7

CONTRACT: 2015.02

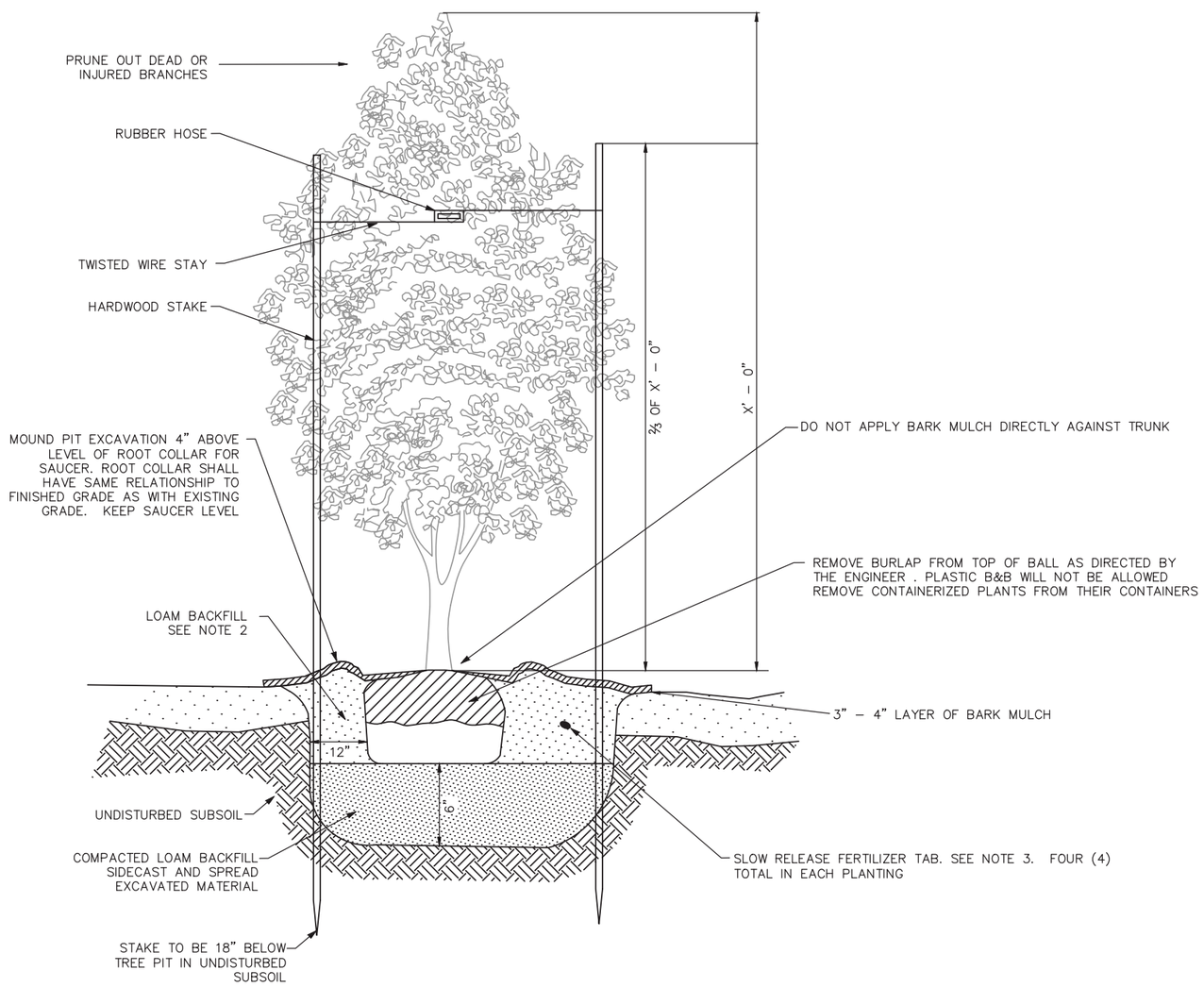

TREE PLANTING

N.T.S.

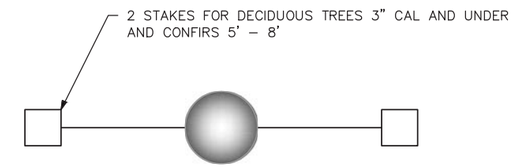

STAKING PLAN

N.T.S.

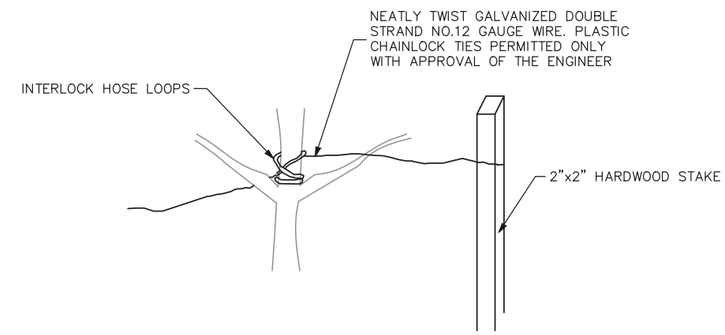

TIE WIRE DETAIL

N.T.S.

GENERAL NOTES:

1. REFER TO MDOT 2002 SPECIFICATIONS SECTION 621 FOR PLANTING INSTRUCTIONS.
2. AMEND BACKFILL MIX WITH MINIMUM OF ⅓ AMENDMENTS PER MDOT SPECIFICATIONS SECTION 621.
3. SEE MDOT SPECIFICATIONS SECTION 621.0025 PARAGRAPH B FOR FERTILIZER TABS.
4. SEE APPENDIX B OF PROJECT SPECIFICATIONS FOR SCHEDULE OF PLANTING LOCATIONS.

Scale:

No.	Revision	By	Date

Designed by:

	By	Date		By	Date
Designed	BAT	01/08/2015	Checked	BAT	01/08/2015
Drawn	BMB	01/08/2015	In Charge of	SRT	01/08/2015

MAINE TURNPIKE AUTHORITY
2360 Congress Street
Portland, ME 04102
TEL (207) 871-7771
FAX (207) 879-5567

THE GOLD STAR MEMORIAL HIGHWAY

MTA PROJECT MANAGER: Joseph R. Leavitt, P.E.

PAVEMENT REHABILITATION
CLEAR ZONE IMPROVEMENTS

TREE PLANTING DETAILS

SHEET NUMBER: TP-1

CONTRACT: 2015.02

ITEM NO.	ITEM DESCRIPTION	UNIT	BALD HILL RD OVERPASS (MILE 71.6)	ROYAL RIVER BRIDGE (MILE 71.1)	TOTAL
202.2021	REMOVING PAVEMENT SURFACE - BRIDGE DECK	SY	720	270	990
202.206	REMOVING RUMBLE STRIPS	LF	2520	1440	3960
403.2084	HOT MIX ASPHALT, 12.5MM (POLYMER MODIFIED) - BRIDGE	TON	122	53	175
409.151	BITUMINOUS TACK COAT, APPLIED, BRIDGE	GAL	36	27	63
411.09	UNTREATED AGGREGATE SURFACE COURSE	CY	20		20
502.701	BRIDGE DRAIN GRATE MODIFICATION	EA	4		4
506.9104	ZINC-RICH COATING SYSTEM (FIELD PAINTING)	LS	0.5	0.5	1
508.141	HIGH PERFORMANCE WATERPROOFING MEMBRANE (BALD HILL RD) (720 SY)	LS	1		1
508.142	HIGH PERFORMANCE WATERPROOFING MEMBRANE (ROYAL RIVER) (270 SY)	LS		1	1
515.201	PIGMENTED PROTECTIVE COATING FOR CONCRETE SURFACES	SY	330		330
515.202	CLEAR PROTECTIVE COATING FOR CONCRETE SURFACES	SY	440	400	840
518.10	ABUTMENT REPAIRS	SF	30	30	60
518.20	PIER REPAIRS	SF	40		40
518.39	GRANITE CURB JOINT MORTAR AND BEDDING MORTAR REPAIR	LF	390		390
518.6317	EPOXY INJECTED CRACK REPAIRS	LF	15		15
518.75	FASCIA AND OVERHANG REPAIRS	SF	195		195
518.80	PARTIAL DEPTH CONCRETE DECK REPAIRS	SF	520	125	645
518.81	FULL DEPTH CONCRETE DECK REPAIRS	SF	130		130
518.87	CONCRETE EDGE BEAM REPAIR (FULL DEPTH)	SF	85		85
520.2211	EXPANSION DEVICE MODIFICATIONS (ROYAL RIVER)	EA		2	2
520.23	EXPANSION DEVICE - ASPHALTIC PLUG JOINT	LF	150		150
520.231	EXPANSION DEVICE - ASPHALTIC PLUG FOR CRACK CONTROL	LF		85	85
526.306	TEMPORARY CONCRETE BARRIER, TYPE I - SUPPLIED BY AUTHORITY	LS	0.6	0.4	1
527.341	WORK ZONE CRASH CUSHION - TL-3	UN	2	1	3
603.91	PRESSURE TREATED WOOD DRAIN TROUGH	LF	120		120
606.352	REFLECTORIZED BEAM GUARDRAIL DELINEATORS	EA	133	36	169
610.18	STONE DITCH PROTECTION	CY	12		12
615.07	LOAM	CY	1		1
618.14	SEEDING METHOD NUMBER 2	UN	1		1
619.1202	TEMPORARY MULCH	LS	1		1
620.58	EROSION CONTROL GEOTEXTILE	SY	37		37
626.12	QUAZITE JUNCTION BOX	EA	3		3
626.22	NON-METALLIC CONDUIT	LF	300		300
627.77	REMOVING EXISTING PAVEMENT MARKING	SF	2308	1200	3508
629.05	HAND LABOR, STRAIGHT TIME	HR	80	40	120
652.30	FLASHING ARROW BOARD	EA	2	1	3
652.34	CONE	EA	15		15
652.35	CONSTRUCTION SIGNS	SF	1460	400	1860
652.3911	MAINTENANCE OF TRAFFIC CONTROL DEVICES (BALD HILL RD)	LS	1		1
652.3912	MAINTENANCE OF TRAFFIC CONTROL DEVICES (ROYAL RIVER)	LS		1	1
652.38	FLAGGER	HR	320		320
652.45	TRUCK MOUNTED ATTENUATOR	CD	20	20	40
656.64	30 INCH TEMPORARY SILT FENCE	LF	50		50
830.25	HORIZONTAL DIRECTIONAL DRILLING, 3 INCH PVC CONDUIT INSTALLATION	LF	300		300

INDEX OF SHEETS

SHEET NO.	SHEET LABEL	DESCRIPTION
25	QT-01	QUANTITIES & GENERAL NOTES (BALD HILL RD & ROYAL RIVER)
26	LD-01	LIMIT OF DISTURBANCE (BALD HILL RD & ROYAL RIVER)
27-28	S-01 - S-02	DECK PLANS & TYPICAL SECTIONS (BALD HILL RD & ROYAL RIVER)
29-30	S-03 - S-04	JOINT REPAIR DETAILS (BALD HILL RD & ROYAL RIVER)
31-34	S-05 - S-08	ABUTMENT REPAIRS
35-38	S-09 - S-12	PIER REPAIRS
39-40	MD-01 - MD-02	MISCELLANEOUS DETAILS
41-43	MT-01 - MT-03	MAINTENANCE OF TRAFFIC (BALD HILL RD & ROYAL RIVER)
44	MT-04	LOCAL ROAD AND WIDE LOAD SIGNING
45	MT-05	MAINTENANCE OF TRAFFIC SIGN SUMMARY
46-53	AB-01 - AB-08	AS BUILTS (BALD HILL RD)
54-57	AB-09 - AB-12	AS BUILTS (ROYAL RIVER)

SPECIFICATIONS:

DESIGN

AASHTO LRFD BRIDGE DESIGN SPECIFICATIONS 7TH EDITION

CONSTRUCTION

STATE OF MAINE, DEPARTMENT OF TRANSPORTATION STANDARD SPECIFICATIONS FOR HIGHWAYS AND BRIDGES, DECEMBER 2002

STATE OF MAINE DEPARTMENT OF TRANSPORTATION STANDARD DETAILS FOR HIGHWAYS AND BRIDGES, DECEMBER 2002 WITH LATEST REVISIONS

AASHTO LRFD BRIDGE CONSTRUCTION SPECIFICATIONS, THIRD EDITION WITH 2013 INTERIMS

DESIGN LOADING:

LIVE LOAD

HL-93

MATERIALS:

CONCRETE

CONCRETE PATCHING AND REPAIR AREAS SHALL BE CLASS AAA-MODIFIED.

REINFORCING STEEL

AASHTO M31, GRADE 60 EPOXY-COATED.

BASIC DESIGN STRESSES:

CONCRETE

CLASS AAA, f'_c = 4,500 P.S.I.

REINFORCING STEEL

f_y = 60,000 P.S.I.

GENERAL NOTES:

1. FOR ADDITIONAL DETAILS REFERENCED OR NOT SHOWN IN THESE DRAWINGS, SEE THE STATE OF MAINE, DEPARTMENT OF TRANSPORTATION STANDARD DETAILS, HIGHWAYS AND BRIDGES, DECEMBER 2002 WITH UPDATES.
2. COPIES OF THE AS-BUILT PLANS ARE ON FILE AT THE MAINE TURNPIKE AUTHORITY. A PORTION OF THESE PLANS ARE INCLUDED IN THIS CONTRACT FOR THE CONTRACTOR'S CONVENIENCE. THE COMPLETENESS AND ACCURACY OF THESE PLANS IS NOT GUARANTEED.
3. REINFORCING STEEL SHALL HAVE A CLEAR COVER OF 2" MIN., UNLESS OTHERWISE NOTED.
4. CHAMFER ALL EXPOSED CONCRETE EDGES ¾" UNLESS OTHERWISE NOTED.
5. ALL CONCRETE CURB FACES AND BRIDGE FASCIAS SHALL HAVE A RUBBED FINISH PRIOR TO THE APPLICATION OF THE CLEAR PROTECTIVE COATING FOR CONCRETE SURFACE.
6. SHIELDING REQUIRED DURING CONSTRUCTION SHALL NOT PROJECT BELOW THE BOTTOM FLANGES OF GIRDERS.
7. ALL PAINT ON EXISTING STEEL, DAMAGED BY CONTRACTOR'S OPERATIONS, SHALL BE REPAIRED TO THE SATISFACTION OF THE RESIDENT AT THE CONTRACTOR'S EXPENSE. THE CONTRACTOR SHALL NOTE THAT THE EXISTING BRIDGE STRUCTURES CONTAIN LEAD BASED PAINT. THE CONTRACTOR SHALL INSTITUTE EVERY PRECAUTION WHEN WORKING WITH MATERIALS COATED WITH LEAD PAINTS.
8. FIELD PAINTING OF EXISTING STRUCTURAL STEEL IS LIMITED TO THE 4 EXTERIOR BEARINGS AT THE ABUTMENTS FOR EACH BALD HILL ROAD BRIDGE, NORTHBOUND AND SOUTHBOUND, AND FOR EACH ROYAL RIVER BRIDGE, NORTHBOUND AND SOUTHBOUND. A TOTAL OF 16 BEARINGS ARE TO BE PAINTED.

PAVING NOTES:

1. ANY NECESSARY CLEANING OF EXISTING PAVEMENT PRIOR TO PAVING SHALL BE INCIDENTAL TO THE RELATED PAVING ITEMS.
2. RECYCLED BITUMINOUS PAVEMENT (RAP) SHALL NOT BE PLACED ON ANY PORTION OF THE EXISTING BRIDGE DECK.
3. ALL COLD JOINTS WITH TEMPERATURES LESS THAN 120°F SHALL BE SEALED WITH JOINT SEALANT CONFORMING TO FEDERAL SPECIFICATION SS-S-140IC.

LIST OF ABBREVIATIONS

ABUT.	ABUTMENT
ADDL.	ADDITIONAL
ASCG.	AGGREGATE SUBBASE COURSE GRAVEL
ALT.	ALTERNATE
APPROX.	APPROXIMATE
BOT.	BOTTOM
BRG.	BEARING
CL.	CLEAR
℄	CENTERLINE
CONC.	CONCRETE
CONSTR.	CONSTRUCTION
DEMO.	DEMOLITION
DIA.	DIAMETER
DIAPH.	DIAPHRAGM
EA.	EACH
EB	EASTBOUND
E.F.	EACH FACE
EL.	ELEVATION
EQ.	EQUAL
EXIST.	EXISTING
EXP.	EXPANSION
F.F.	FAR FACE
JT.	JOINT
MAX.	MAXIMUM
MIN.	MINIMUM
MTA	MAINE TURNPIKE AUTHORITY
NB	NORTHBOUND
N.F.	NEAR FACE
N.T.S.	NOT TO SCALE
O.H.W.	ORDINARY HIGH WATER
PED.	PEDESTAL
PGL	PROFILE GRADE LINE
ℙ	PLATE
PROP.	PROPOSED
RDWY.	ROADWAY
SHLD.	SHOULDER
SB	SOUTHBOUND
SP.	SPACES
STA.	STATION
T.&B.	TOP & BOTTOM
TPKE.	TURNPIKE
TYP.	TYPICAL
U.O.N.	UNLESS OTHERWISE NOTED
VERT.	VERTICAL
WB	WESTBOUND
W.P.	WORKING POINT

SUBSTRUCTURE REPAIR PROCEDURAL NOTES:

1. CONCRETE REPAIRS, INCLUDING THE ASSOCIATED REMOVALS, WILL BE PAID UNDER 518 ITEMS.

REMOVAL PROCEDURE:

1. PRIOR TO THE START OF THE CONCRETE REMOVAL, THE RESIDENT AND THE CONTRACTOR SHALL SOUND ALL EXPOSED SURFACES OF CONCRETE AND AGREE ON THE REMOVAL LIMITS. SHOULD THE REMOVAL AREA LIMITS APPEAR TO CHANGE DURING THE DEMOLITION PROCESS, THE CONTRACTOR SHALL NOTIFY THE RESIDENT. THE RESIDENT AND CONTRACTOR SHALL AGREE ON THE REVISED PAY LIMITS PRIOR TO THE CONTRACTOR CONTINUING THE REMOVAL.
2. PERFORM 1 INCH DEEP SAWCUTS ALONG LIMITS OF REMOVAL.
3. CHIP CONCRETE TO DEPTH REQUIRED PER MAINEDOT STANDARD SPECIFICATION 518.

CONCRETE SURFACE PATCH/REPAIR PROCEDURE:

1. PREPARE AND PATCH REPAIR AREAS WITH CLASS AAA MODIFIED CONCRETE. SEE SPECIFICATIONS FOR MATERIAL, PREPARATION, PLACEMENT, AND CURING REQUIREMENTS.
2. PERFORM GENERAL FINISHING AS NOTED.

EPOXY INJECTION CRACK REPAIR:

1. PREPARE CONCRETE SURFACE AND CRACK AREA BY CLEANING SUBSTRATE WITH WIRE BRUSH TO REMOVE LAITANCE AND CONTAMINANTS. BLAST CLEAN THE CRACK AND CONCRETE SURFACE; DO NOT USE WATER.
2. SET INJECTION PORTS ALONG THE LENGTH OF THE CRACK USING A HIGH-MODULUS EPOXY ADHESIVE. ONCE SET, SEAL PORTS AND CRACK WITH SAME EPOXY ADHESIVE.
3. WHEN THE EPOXY ADHESIVE SEAL HAS CURED, INJECT A HIGH-MODULUS, LOW-VISCOSITY EPOXY SUCH AS SIKADUR 35, SIKADUR 55, OR APPROVED EQUAL.

GENERAL FINISHING:

1. CONTRACTOR SHALL REMOVE TECTYL COATING WHERE PRESENT PRIOR TO APPLYING PROTECTIVE CONCRETE COATING. WORK SHALL BE INCIDENTAL TO THE SPECIFIED ITEM IN S.P. 518.
3. ALL EXPOSED SURFACES ON BALD HILL ROAD BRIDGES SHALL BE COATED WITH A PROTECTIVE COATING SUITABLE FOR CONCRETE SURFACES AFTER PATCHING IS COMPLETE AND PATCH MATERIALS HAVE CURED. SEE S.P. 515 FOR LIMITS OF CLEAR AND PIGMENTED COATING.
4. PARAPETS, FASCIAS AND FASCIA OVERHANGS, AND END POSTS ON ROYAL RIVER BRIDGES SHALL BE COATED WITH CLEAR PROTECTIVE COATING SUITABLE FOR CONCRETE SURFACES. ROYAL RIVER ABUTMENTS SHALL NOT BE RE-COATED AND TECTYL COATING SHALL NOT BE REMOVED EXCEPT DIRECTLY AROUND PATCHING AREAS. CLEAR PROTECTIVE COATING SHALL BE APPLIED TO ABUTMENT PATCH LOCATIONS AFTER PATCHING IS COMPLETE AND PATCH MATERIALS HAVE CURED.

Scale: NOT TO SCALE

No.	Revision	By	Date

Designed by: T·Y·LIN INTERNATIONAL

CONSULTANT PROJECT MANAGER: Norman L. Baker

	By	Date		By	Date
Designed	NLB	01/2015	Checked	DSM	01/2015
Drawn	SAM	01/2015	In Charge of	NLB	01/2015

T.Y. Lin International
12 Northbrook Drive
Building A, Suite One
Falmouth, Maine 04105
TEL: (207) 781-4721
FAX: (207) 781-4753

MAINE TURNPIKE

THE GOLD STAR MEMORIAL HIGHWAY

MTA PROJECT MANAGER: Ralph Norwood

BALD HILL & ROYAL RIVER BRIDGE REPAIRS
(MILE 71.6) (MILE 71.1)

QUANTITIES & GENERAL NOTES

SHEET NUMBER: QT-01

CONTRACT: 2015.02

Filename: ...\BRIDGE\MSTA\025_Quantities.dgn Division: Bridge Username: Date:3/20/2015
I:\Falmouth\Projects\2013\41747.00 - MTA-5 Bridge Repairs Phase I

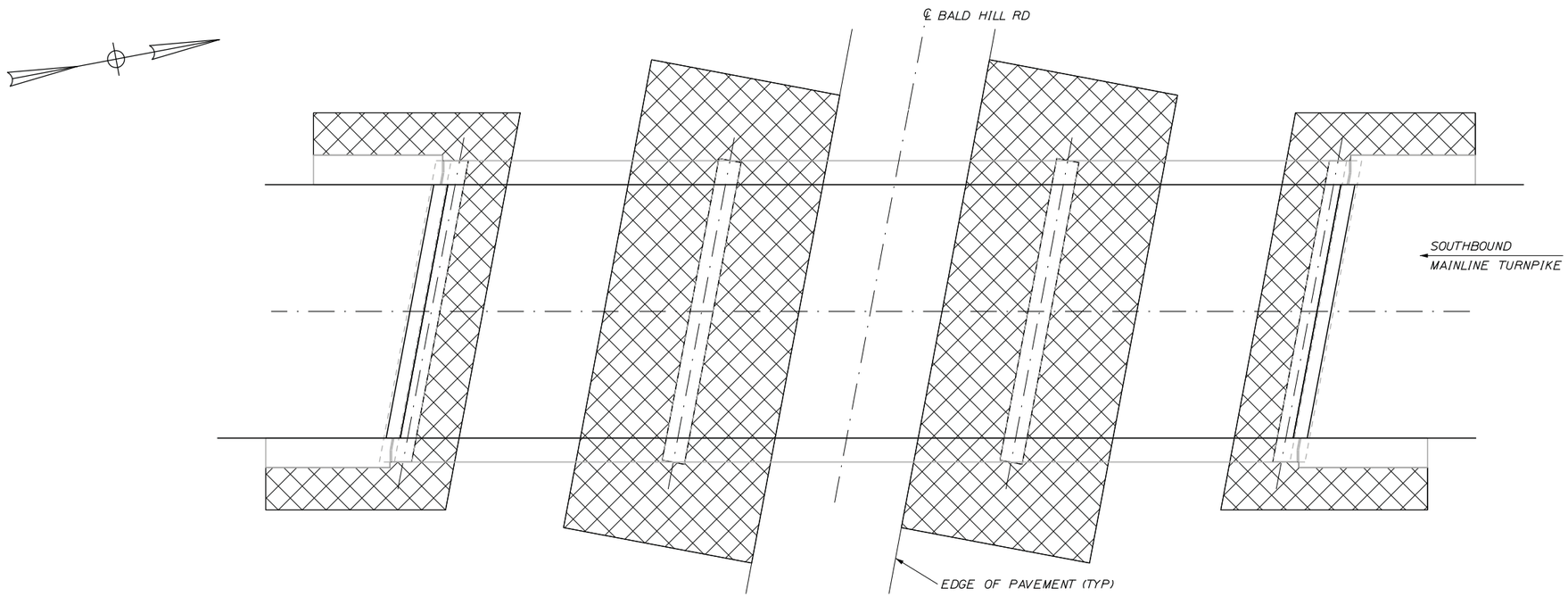

LIMIT OF DISTURBANCE PLAN - BALD HILL ROAD

NOT TO SCALE
NORTHBOUND BRIDGE SIMILAR

LEGEND:

CONTRACT LIMIT OF DISTURBANCE

CONTRACTOR'S LIMIT OF DISTURBANCE AREA FOR ACCESS AND STORAGE

AREAS:

LOCATION	CONTRACT LIMIT OF DISTURBANCE	CONTRACTOR'S LIMIT OF DISTURBANCE AREA FOR ACCESS AND STORAGE
BALD HILL ROAD OVERPASSES (MILE 71.6)	0.00 ACRES	0.25 ACRES
ROYAL RIVER BRIDGES (MILE 71.1)	0.00 ACRES	0.10 ACRES

NOTES:

1. EROSION AND SEDIMENT CONTROL DEVICES REQUIRED FOR THE CONTRACTOR'S ACCESS LOCATIONS AND STORAGE AREAS WILL NOT BE MEASURED FOR PAYMENT.
2. THE CONTRACTOR WILL BE ALLOWED TO STORE MATERIAL AND EQUIPMENT ON GRAVEL AND PAVEMENT WITHIN THE CLOSED PORTIONS OF THE MAINLINE TURNPIKE. THESE AREAS ARE EITHER INCLUDED IN THE LIMITS OF DISTURBANCE OR HAVE BEEN PREVIOUSLY SURFACED AND DO NOT ADD TO THE LIMITS OF DISTURBANCE. A TOTAL OF 0.25 ACRES HAS BEEN ESTIMATED FOR CONTRACTOR ACCESS AND STORAGE AREA AT BALD HILL ROAD AND 0.10 ACRES AT ROYAL RIVER.
3. CONTRACTOR SHALL TAKE PRECAUTIONS TO AVOID IMPACTING OR DISTURBING ROADWAY DITCHES.
4. CONTRACTOR LIMIT OF DISTURBANCE AREAS FOR THE ROYAL RIVER BRIDGES ARE SIMILAR TO THOSE SHOWN FOR BALD HILL ROAD BUT WITHOUT THE PIERS.

Scale: NOT TO SCALE

No.	Revision	By	Date

Designed by: T·Y·LIN INTERNATIONAL

CONSULTANT PROJECT MANAGER: Norman L. Baker

	By	Date		By	Date
Designed	NLB	01/2015	Checked	DSM	01/2015
Drawn	SAM	01/2015	In Charge of	NLB	01/2015

T.Y. Lin International
12 Northbrook Drive
Building A, Suite One
Falmouth, Maine 04105
TEL: (207) 781-4721
FAX: (207) 781-4753

MAINE TURNPIKE
THE GOLD STAR MEMORIAL HIGHWAY

MTA PROJECT MANAGER: Ralph Norwood

BALD HILL & ROYAL RIVER BRIDGE REPAIRS
(MILE 71.6) (MILE 71.1)

LIMIT OF DISTURBANCE

CONTRACT: 2015.02

SHEET NUMBER: LD-01

Filename: ...\026_Limits_Of_Disturbance.dgn Division: Bridge Username: Date:3/20/2015
I:\Falmouth\Projects\2015\41\1747.00 MTA-5 Bridge Repairs Phase I

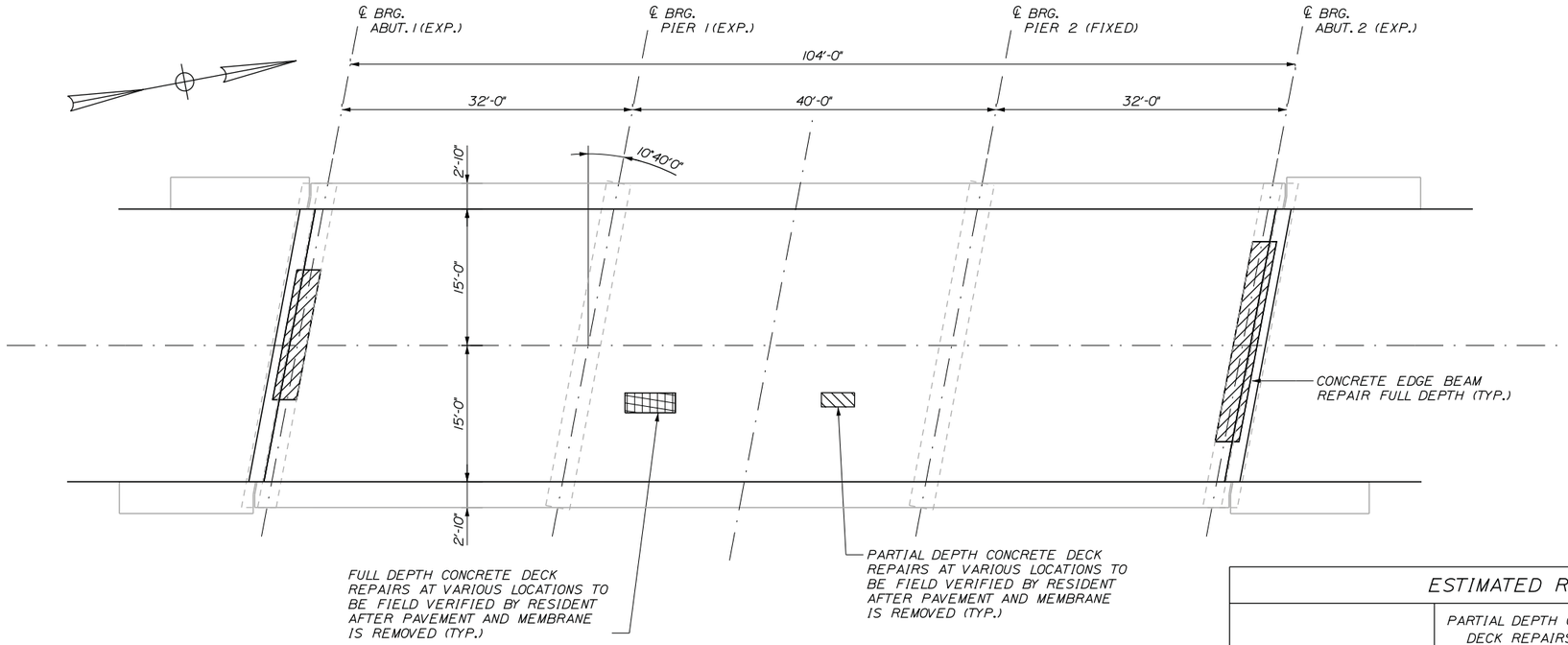

DECK PLAN - WEST

SCALE: 1/8" = 1'-0"
(EAST BRIDGE SIMILAR)

NOTES:

1. CONTRACTOR SHALL REPAIR AREAS OF CONCRETE DECK DETERIORATION AS IDENTIFIED BY THE RESIDENT. RESIDENT SHALL IDENTIFY AND MARK AREAS FOR DECK REPAIR AFTER THE WEARING SURFACE AND MEMBRANE ARE REMOVED. CONTRACTOR SHALL ALSO REPAIR DETERIORATED AREAS OF FASCIA, FASCIA OVERHANGS, AND CONCRETE EDGE BEAMS ALONG THE BRIDGE JOINTS. COORDINATE WORK WITH THE RESIDENT. PAYMENT FOR REPAIR WORK SHALL BE UNDER THE 518 PAY ITEMS.
2. CONTRACTOR SHALL REPAIR AREAS OF DETERIORATED GRANITE CURB BEDDING AND JOINT MORTAR ON THE DECK AS REQUIRED. LOCATIONS OF GRANITE CURB BEDDING AND JOINT MORTAR SHALL BE FIELD DETERMINED BY THE RESIDENT. PAYMENT SHALL BE UNDER THE 518 PAY ITEMS.
3. SEAL SHOULDER AREAS WITH TWO APPLICATIONS OF EMULSIFIED BITUMINOUS SEALER PER MAINEDOT STANDARD SPECIFICATION 403.03 AFTER COMPLETING ALL DECK PAVING WORK.
4. ALL PVC DECK WEEPS WHICH DRAIN ONTO PIERS, ABUTMENTS OR STRUCTURAL STEEL SHALL BE EXTENDED AND DIVERTED AWAY FROM BRIDGE COMPONENTS BELOW DECK, AS DIRECTED BY THE RESIDENT. PAYMENT SHALL BE BY THE VARIOUS LABOR AND EQUIPMENT ITEMS.

ESTIMATED REPAIR QUANTITIES (BOTH EAST & WEST DECKS)

	PARTIAL DEPTH CONCRETE DECK REPAIRS (S.F.)	FULL DEPTH CONCRETE DECK REPAIRS (S.F.)	FASCIA AND FASCIA OVERHANG REPAIRS (S.F.)	CONCRETE EDGE BEAM REPAIR FULL DEPTH (S.F.)
BALD HILL ROAD MM 71.6	520	130	195	85

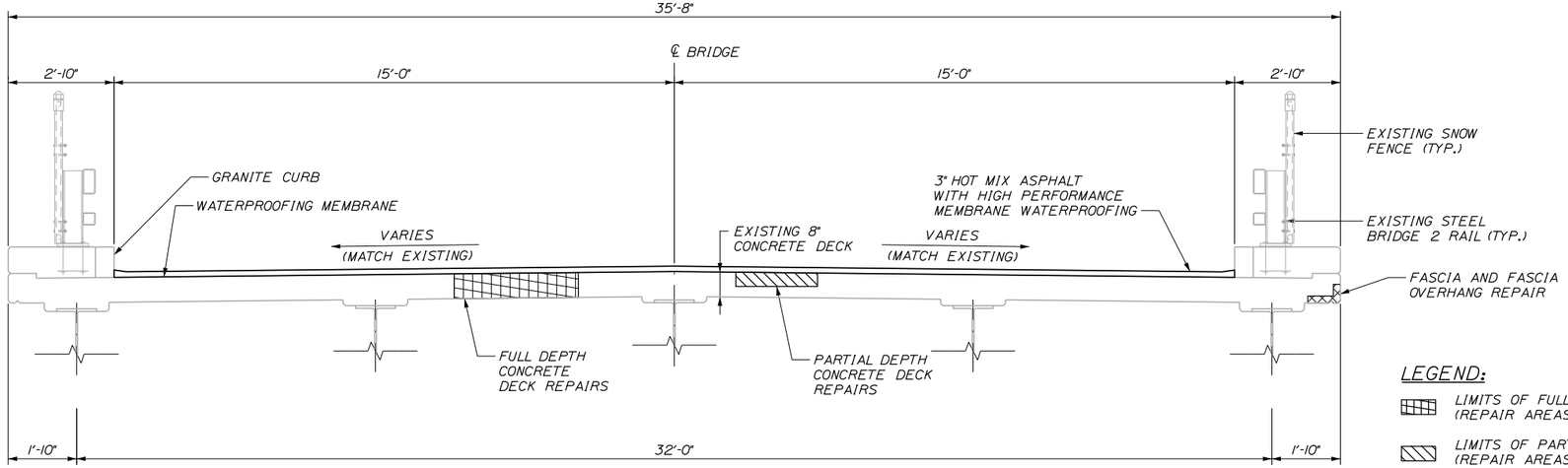

TRANSVERSE SECTION - WEST

SCALE: 1/4" = 1'-0"
(EAST BRIDGE SIMILAR)

LEGEND:

- LIMITS OF FULL DEPTH CONCRETE DECK REPAIR (REPAIR AREAS TO BE FIELD VERIFIED)
- LIMITS OF PARTIAL DEPTH CONCRETE DECK REPAIR (REPAIR AREAS TO BE FIELD VERIFIED)
- LIMITS OF FASCIA AND FASCIA OVERHANG REPAIR (REPAIR AREAS TO BE FIELD VERIFIED)
- LIMITS OF CONCRETE EDGE BEAM REPAIR FULL DEPTH (REPAIR AREAS TO BE FIELD VERIFIED)

Scale: AS NOTED

No.	Revision	By	Date

Designed by: T·Y·LIN INTERNATIONAL

CONSULTANT PROJECT MANAGER: Norman L. Baker

	By	Date		By	Date
Designed	NLB	01/2015	Checked	DSM	01/2015
Drawn	SAM	01/2015	In Charge of	NLB	01/2015

T.Y. Lin International
12 Northbrook Drive
Building A, Suite One
Falmouth, Maine 04105
TEL: (207) 781-4721
FAX: (207) 781-4753

MAINE TURNPIKE
THE GOLD STAR MEMORIAL HIGHWAY

MTA PROJECT MANAGER: Ralph Norwood

BALD HILL BRIDGE REPAIRS (MILE 71.6)

DECK PLAN & TYPICAL SECTION

SHEET NUMBER: S-01

CONTRACT: 2015.02

Filename: ...\BRIDGE\MSTA\027_Plan_Typ.dgn Division: Bridge Username: Date:3/20/2015
T:\Falmouth\Projects\2013\41747.00 - MTA-5 Bridge Repairs Phase I

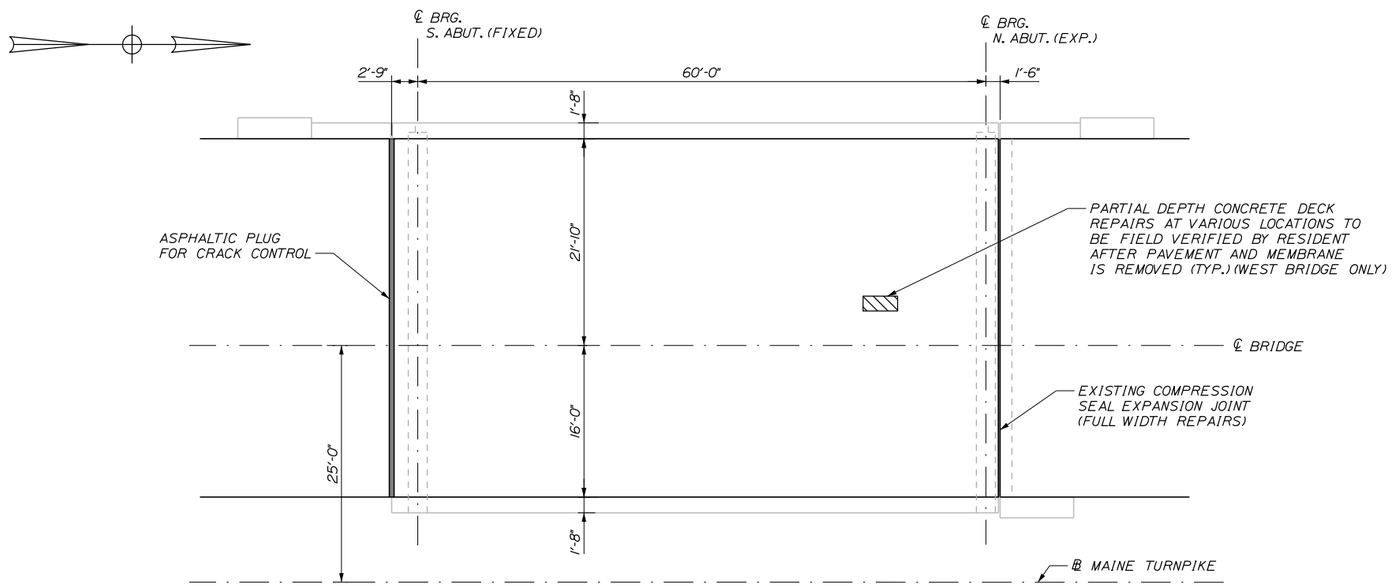

DECK PLAN - WEST

SCALE: 1/8" = 1'-0"
(EAST BRIDGE SIMILAR)

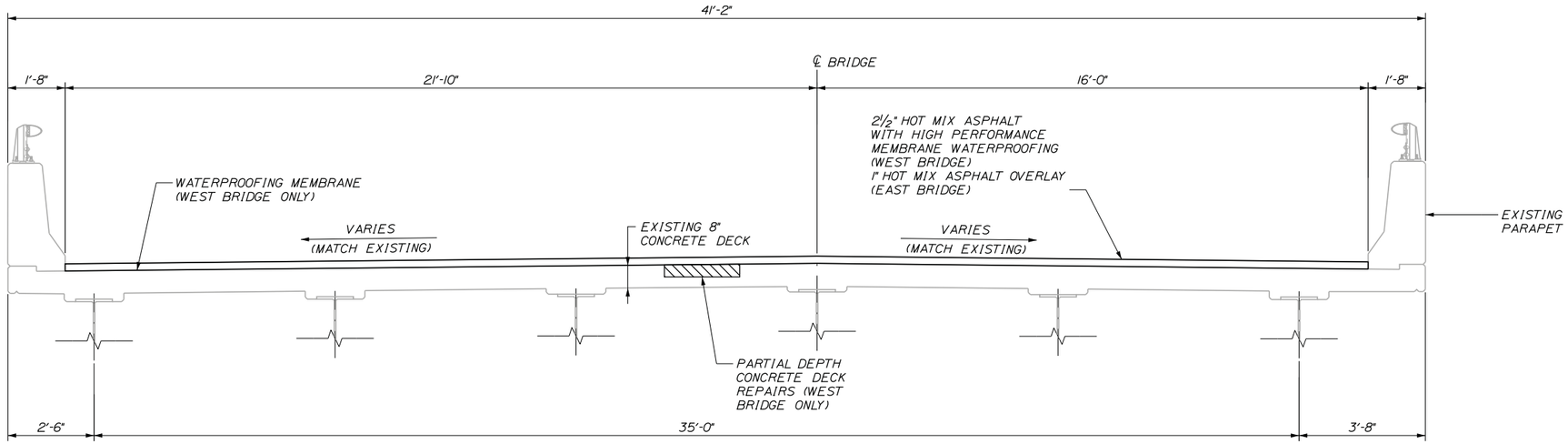

TRANSVERSE SECTION - WEST

SCALE: 1/4" = 1'-0"
(LOOKING NORTH)
(EAST BRIDGE SIMILAR)

NOTES:

1. CONTRACTOR SHALL REPAIR AREAS OF CONCRETE DECK DETERIORATION AS IDENTIFIED BY THE RESIDENT. RESIDENT SHALL IDENTIFY AND MARK AREAS FOR DECK REPAIR ON THE WEST (SOUTHBOUND) BRIDGE AFTER THE WEARING SURFACE AND MEMBRANE ARE REMOVED. COORDINATE WORK WITH THE RESIDENT. PAYMENT FOR REPAIR WORK SHALL BE UNDER THE 518 PAY ITEMS.
2. CONTRACTOR SHALL REPAIR AREAS OF ABUTMENT DETERIORATION AS IDENTIFIED BY THE RESIDENT. PRIMARY AREAS OF REPAIR ARE ANTICIPATED TO BE ON THE BACKWALL NEAR FASCIA GIRDERS. PAYMENT FOR REPAIR WORK SHALL BE UNDER THE 518 PAY ITEMS.
3. FOR CONCRETE REPAIR DETAIL FOR ABUTMENTS. SEE SHEET "ABUTMENT 1 WEST REPAIRS" (BALD HILL RD). FOR PROCEDURAL NOTES SEE SHEET "QUANTITIES & GENERAL NOTES."
4. SEAL SHOULDER AREAS WITH TWO APPLICATIONS OF EMULSIFIED BITUMINOUS SEALER PER MAINEDOT STANDARD SPECIFICATION 403.03 AFTER COMPLETING ALL DECK PAVING WORK.
5. EXISTING BRIDGE DRAINS ON THE EAST (NORTHBOUND) BRIDGE SHALL REMAIN INTACT. FEATHER NEW 1" OVERLAY DOWN TO BRIDGE DRAINS OVER SURROUNDING 9" ON ALL SIDES.

ESTIMATED REPAIR QUANTITIES

	PARTIAL DEPTH CONCRETE DECK REPAIRS (S.F.)	ABUTMENT REPAIRS (S.F.)
ROYAL RIVER MM 71.1 SOUTHBOUND	125	15
ROYAL RIVER MM 71.1 NORTHBOUND	--	15

LEGEND:

LIMITS OF PARTIAL DEPTH CONCRETE DECK REPAIR (REPAIR AREAS TO BE FIELD VERIFIED)

Scale: AS NOTED

No.	Revision	By	Date

Designed by: T.Y. LIN INTERNATIONAL

CONSULTANT PROJECT MANAGER: Norman L. Baker

	By	Date		By	Date
Designed	DSM	03/2015	Checked	CPT	03/2015
Drawn	PJB	03/2015	In Charge of	NLB	03/2015

T.Y. Lin International
12 Northbrook Drive
Building A, Suite One
Falmouth, Maine 04105
TEL: (207) 781-4721
FAX: (207) 781-4753

MAINE TURNPIKE — THE GOLD STAR MEMORIAL HIGHWAY

MTA PROJECT MANAGER: Ralph Norwood

ROYAL RIVER BRIDGE REPAIRS (MILE 71.1)

DECK PLAN & TYPICAL SECTION

CONTRACT: 2015.02

SHEET NUMBER: S-02

Filename: ...\028_Plan_Typ - RoyalRiver.dgn Division: Bridge Username: Date:3/20/2015
T:\Falmouth\Projects\2013\41747.00 - MTA-5 Bridge Repairs Phase I

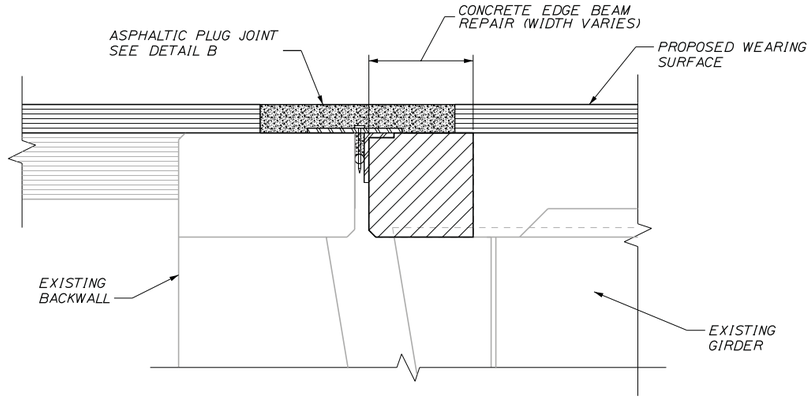

JOINT REPAIR SECTION

NOT TO SCALE

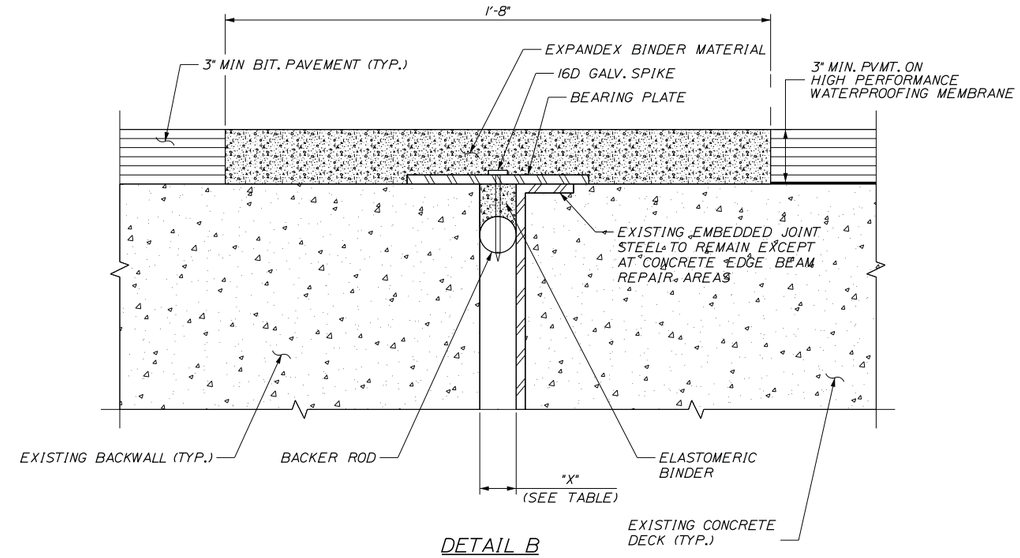

DETAIL B

NOT TO SCALE

ASPHALTIC PLUG JOINT NOTES:

1. DECK AND BACKWALL REINFORCING NOT SHOWN FOR CLARITY.
2. CENTERING NAILS SHALL BE SPACED AT 12" O.C. MAXIMUM AND PLACED 2" FROM JOINTS IN THE BEARING PLATE.
3. THE BEARING PLATE SHALL BE GALVANIZED STEEL 1/4" THICK AND 8" WIDE.
4. TOP OF EXISTING JOINT ARMOR SHALL BE SANDBLASTED TO WHITE METAL IMMEDIATELY BEFORE JOINT INSTALLATION.
5. ASPHALTIC PLUG JOINT SHALL BE INSTALLED AT THE END OF EACH PHASE OF CONSTRUCTION PRIOR TO TRAFFIC ON THE REHABILITATED SECTION OF BRIDGE DECK.

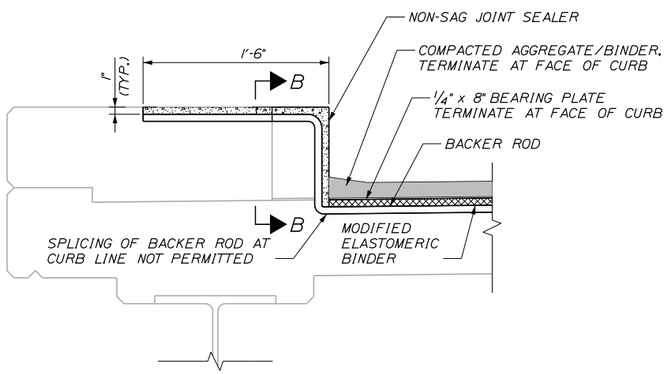

JOINT DETAIL AT CURB

NOT TO SCALE

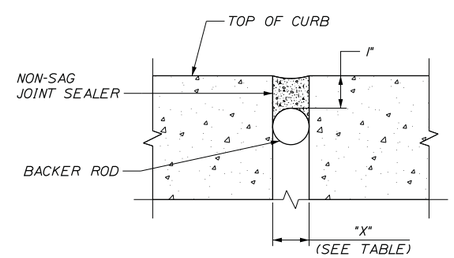

SECTION B-B

NOT TO SCALE

JOINT INSTALLATION TABLE - NB AND SB BRIDGES								
NORTH ABUTMENT								
TEMP (°F)	20°	30°	40°	45°	50°	60°	70°	80°
"X" INCHES	1 9/16"	1 9/16"	1 1/2"	1 1/2"	1 1/2"	1 7/16"	1 7/16"	1 7/16"
SOUTH ABUTMENT								
TEMP (°F)	20°	30°	40°	45°	50°	60°	70°	80°
"X" INCHES	1 5/8"	1 9/16"	1 1/2"	1 1/2"	1 1/2"	1 7/16"	1 3/8"	1 5/16"

Date:3/20/2015

Username:

Division: Bridge

Filename: ...\MSTA\029_Joint_Repairs.dgn

T:\Falmouth\Projects\2013\41747.00 MTA-5 Bridge Repairs Phase I

Scale:

AS NOTED

No.	Revision	By	Date

Designed by:

T·Y·LIN INTERNATIONAL

CONSULTANT PROJECT MANAGER: Norman L. Baker

	By	Date		By	Date
Designed	NLB	01/2015	Checked	DSM	01/2015
Drawn	SAM	01/2015	In Charge of	NLB	01/2015

T.Y. Lin International
12 Northbrook Drive
Building A, Suite One
Falmouth, Maine 04105
TEL: (207) 781-4721
FAX: (207) 781-4753

MAINE TURNPIKE

THE GOLD STAR
MEMORIAL HIGHWAY

MTA PROJECT MANAGER: Ralph Norwood

BALD HILL BRIDGE REPAIRS
(MILE 71.6)

JOINT REPAIR DETAILS

SHEET NUMBER: S-03

CONTRACT: 2015.02

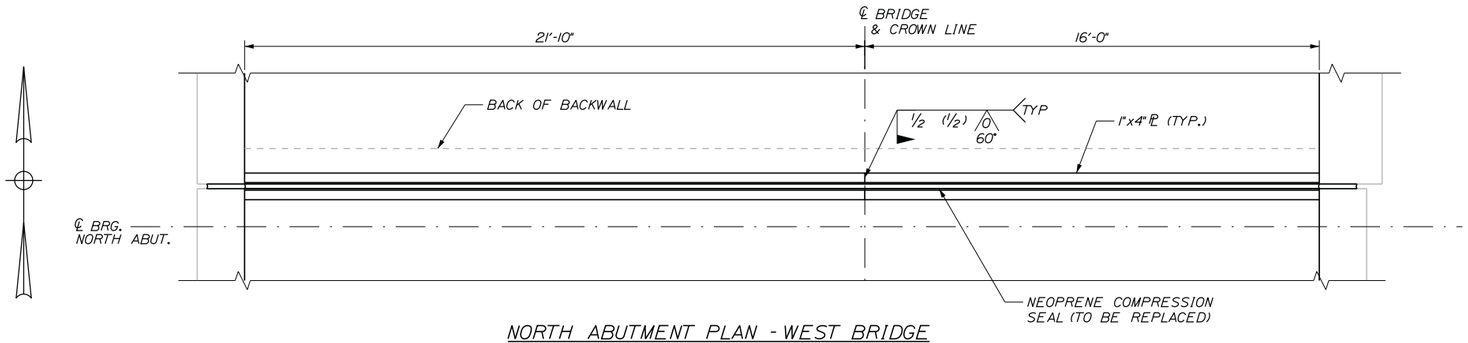

NORTH ABUTMENT PLAN - WEST BRIDGE

3/8" = 1'-0"

(EAST BRIDGE SIMILAR)

EXPANSION JOINT NOTES:

1. ALL STEEL COMPONENTS SHALL BE AASHTO M270 GRADE 36, UNLESS OTHERWISE NOTED.
2. THE NEOPRENE LOCKING COMPRESSION SEALS TO BE FURNISHED SHALL HAVE A MINIMUM MOVEMENT RANGE OF 1 INCH. SEALS SHALL BE "SA-BOX SEAL" AS MANUFACTURED BY D.S. BROWN.
3. CONTRACTOR SHALL FIELD VERIFY LOCKING COMPRESSION SEAL DIMENSIONS AND OPENING AND INSTALL REPLACEMENT SEAL AT A TEMPERATURE SUCH THAT INSTALLATION IS FEASIBLE.
4. TEMPORARY HOT MIX ASPHALT BITUMINOUS RAMPS SHALL BE PLACED IF TRAFFIC IS TO BE RUN OVER JOINT AFTER INSTALLATION OF SHIM PLATE BUT BEFORE PROPOSED PAVEMENT IS COMPLETED. THE TEMPORARY RAMP SHALL EXTEND 35 FEET MINIMUM FROM FACE OF JOINT PLATE FOR EACH INCH OF HEIGHT. HOT MIX ASPHALT FOR TEMPORARY RAMPS AND REMOVAL OF THE TEMPORARY RAMPS SHALL NOT BE MEASURED FOR PAVEMENT, BUT SHALL BE INCIDENTAL TO ITEM 520.2211.

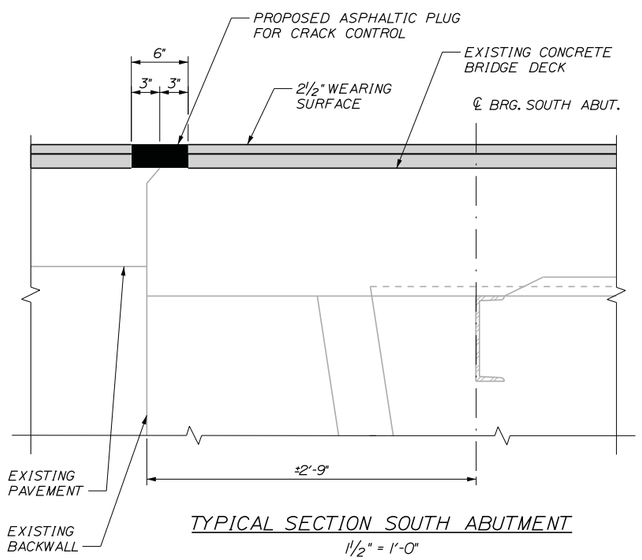

TYPICAL SECTION SOUTH ABUTMENT

1 1/2" = 1'-0"

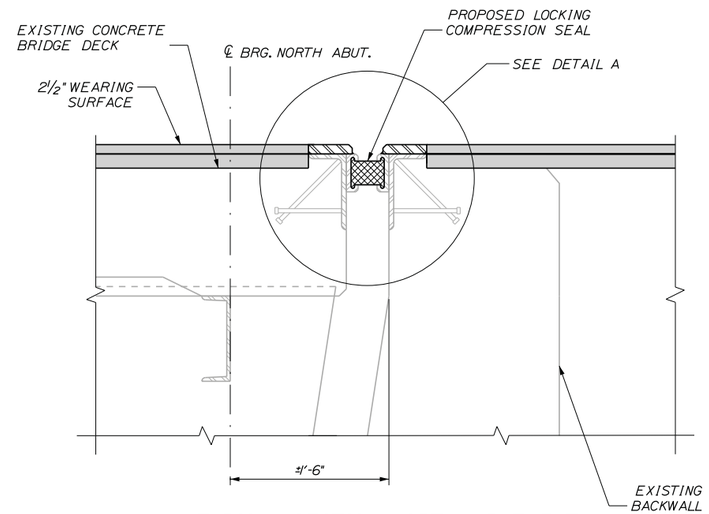

TYPICAL SECTION NORTH ABUTMENT

1 1/2" = 1'-0"

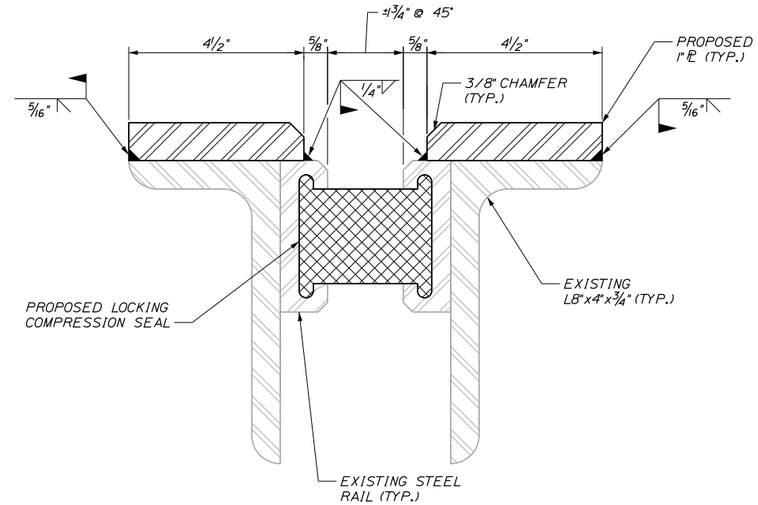

DETAIL A

6"=1'-0"

Scale: AS NOTED			
No.	Revision	By	Date

Designed by:

T·Y·LIN INTERNATIONAL

CONSULTANT PROJECT MANAGER: Norman L. Baker

	By	Date		By	Date
Designed	DSM	03/2015	Checked	CPT	03/2015
Drawn	PJB	03/2015	In Charge of	NLB	03/2015

T.Y. Lin International
12 Northbrook Drive
Building A, Suite One
Falmouth, Maine 04105
TEL: (207) 781-4721
FAX: (207) 781-4753

MAINE TURNPIKE

THE GOLD STAR MEMORIAL HIGHWAY

MTA PROJECT MANAGER: Ralph Norwood

ROYAL RIVER BRIDGE REPAIRS (MILE 71.1)

JOINT REPAIRS

SHEET NUMBER: S-04

CONTRACT: 2015.02

Filename: ...\030_Joint_Repairs_RoyalRiver.dgn Division: Bridge Username: Date:3/20/2015
T:\Falmouth\Projects\2013\41747.00 - MTA-5 Bridge Repairs Phase I

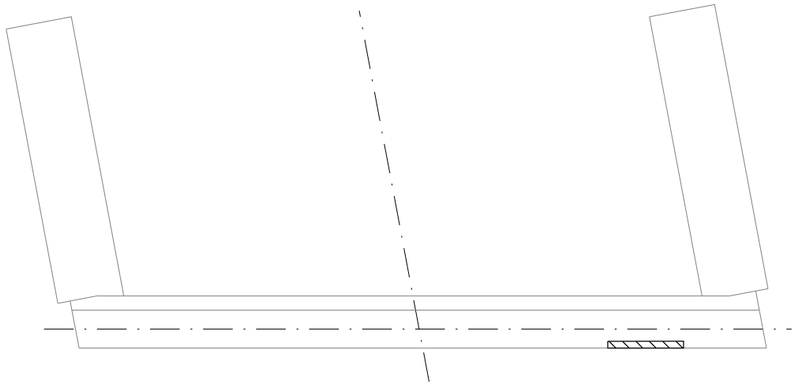

ABUTMENT 1 PLAN (WEST)

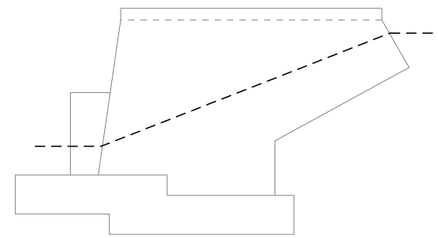

WEST WINGWALL

BALD HILL ROAD, UNDERPASS - MM F71.6 ABUTMENTS ESTIMATED QUANTITY OF REPAIRS			
	ABUTMENT 1	ABUTMENT 2	TOTAL
ABUTMENT REPAIRS (WEST)	20 S.F.	0 S.F.	20 S.F.
ABUTMENT REPAIRS (EAST)	5 S.F.	5 S.F.	10 S.F.
EPOXY INJECTED CRACK REPAIRS (WEST)	0 L.F.	0 L.F.	0 L.F.
EPOXY INJECTED CRACK REPAIRS (EAST)	0 L.F.	0 L.F.	0 L.F.

NOTES:

1. FOR PROCEDURAL NOTES SEE SHEET "QUANTITIES & GENERAL NOTES".

LEGEND:

- LIMIT OF CONCRETE SURFACE REPAIRS
- LIMIT OF EPOXY INJECTED CRACK REPAIR
- EXISTING CONCRETE
- EXISTING AND PROPOSED GROUND

ABUTMENT 1 ELEVATION (WEST)

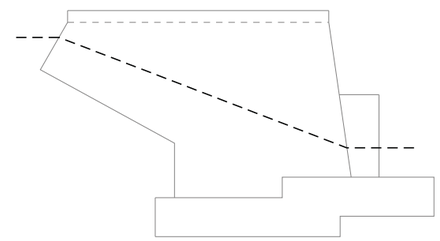

EAST WINGWALL

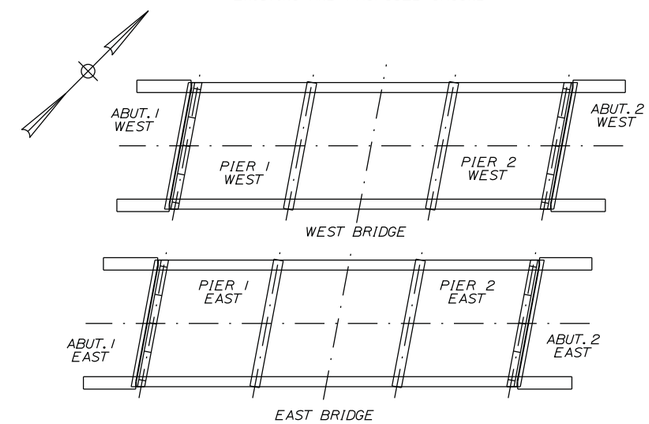

LOCATION PLAN

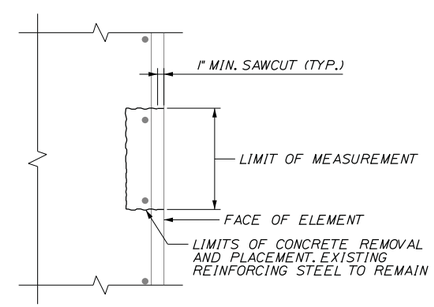

CONCRETE REPAIR DETAIL

1" = 1'-0"

Scale: NOT TO SCALE

No.	Revision	By	Date

Designed by: T.Y. LIN INTERNATIONAL

CONSULTANT PROJECT MANAGER: Norman L. Baker

	By	Date		By	Date
Designed	NLB	01/2015	Checked	DSM	01/2015
Drawn	SAM	01/2015	In Charge of	NLB	01/2015

T.Y. Lin International
12 Northbrook Drive
Building A, Suite One
Falmouth, Maine 04105
TEL: (207) 781-4721
FAX: (207) 781-4753

MAINE TURNPIKE

THE GOLD STAR MEMORIAL HIGHWAY

MTA PROJECT MANAGER: Ralph Norwood

BALD HILL BRIDGE REPAIRS
(MILE 71.6)

ABUTMENT 1 WEST REPAIRS

SHEET NUMBER: S-05

CONTRACT: 2015.02

Filename: ...\031_Abut_1_West_Repair.dgn Division: Bridge Username: Date:3/20/2015
T:\Falmouth\Projects\2013\41747.00 - MTA-5 Bridge Repairs Phase I

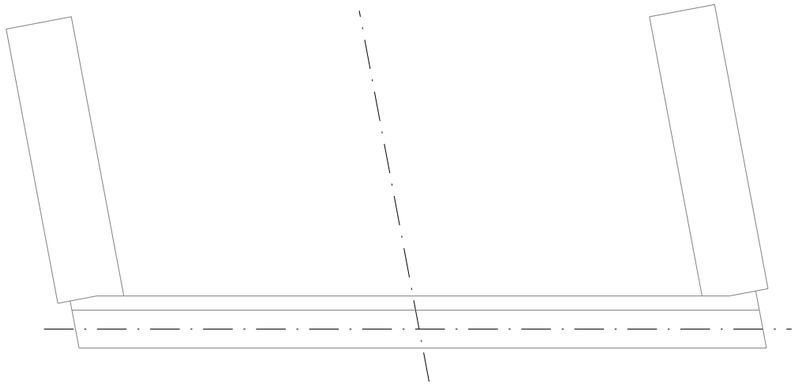

ABUTMENT 2 PLAN (WEST)

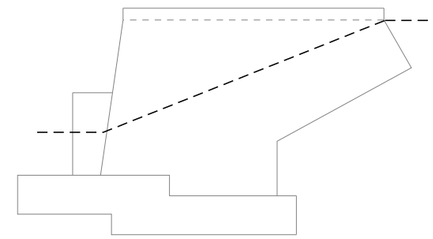

EAST WINGWALL

NOTES:

1. FOR CONCRETE REPAIR DETAIL SEE SHEET "ABUTMENT 1 WEST REPAIRS"
2. FOR PROCEDURAL NOTES SEE SHEET "QUANTITIES & GENERAL NOTES"

LEGEND:

- LIMIT OF CONCRETE SURFACE REPAIRS
- LIMIT OF EPOXY INJECTED CRACK REPAIR
- EXISTING CONCRETE
- EXISTING AND PROPOSED GROUND

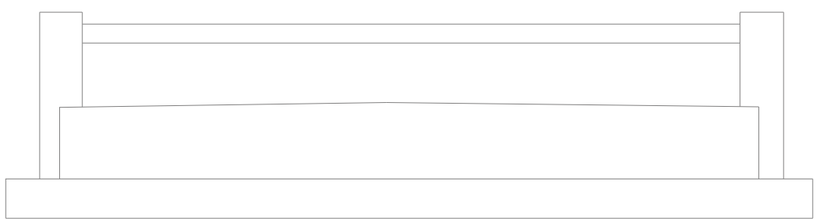

ABUTMENT 2 ELEVATION (WEST)

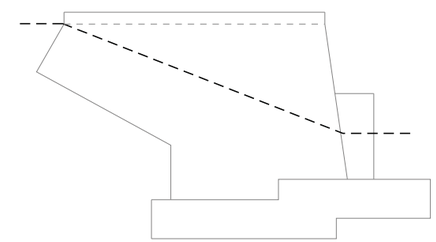

WEST WINGWALL

Filename: ...\032_Abut_2_West_Repair.dgn Division: Bridge Username: Date:3/20/2015

T:\Falmouth\Projects\2013\41747.00 - MTA-5 Bridge Repairs Phase I

Scale: NOT TO SCALE			
No.	Revision	By	Date

Designed by:

T·Y·LIN INTERNATIONAL

CONSULTANT PROJECT MANAGER: Norman L. Baker

	By	Date		By	Date
Designed	NLB	01/2015	Checked	DSM	01/2015
Drawn	SAM	01/2015	In Charge of	NLB	01/2015

T.Y. Lin International
12 Northbrook Drive
Building A, Suite One
Falmouth, Maine 04105
TEL: (207) 781-4721
FAX: (207) 781-4753

MAINE TURNPIKE

THE GOLD STAR MEMORIAL HIGHWAY

MTA PROJECT MANAGER: Ralph Norwood

BALD HILL BRIDGE REPAIRS
(MILE 71.6)

ABUTMENT 2 WEST REPAIRS

SHEET NUMBER: S-06

CONTRACT: 2015.02

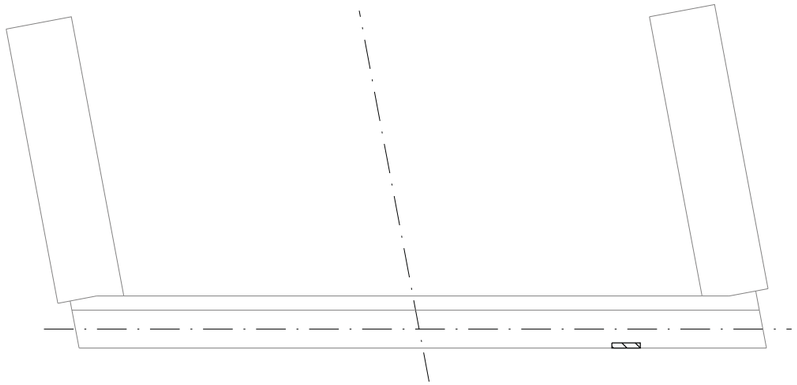

ABUTMENT 1 PLAN (EAST)

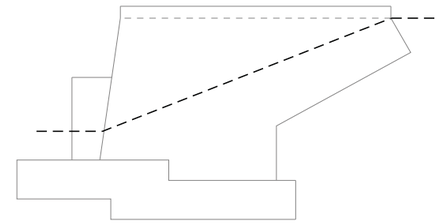

WEST WINGWALL

NOTES:

1. FOR CONCRETE REPAIR DETAIL SEE SHEET "ABUTMENT 1 WEST REPAIRS"
2. FOR PROCEDURAL NOTES SEE SHEET "QUANTITIES & GENERAL NOTES"

LEGEND:

- LIMIT OF CONCRETE SURFACE REPAIRS
- LIMIT OF EPOXY INJECTED CRACK REPAIR
- EXISTING CONCRETE
- EXISTING AND PROPOSED GROUND

ABUTMENT 1 ELEVATION (EAST)

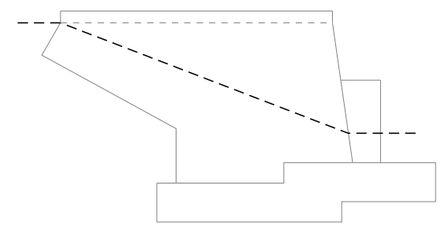

EAST WINGWALL

Filename: ...\033_Abut_1_East_Repair.dgn Division: Bridge Username: Date:3/20/2015

I:\Falmouth\Projects\2013\41747.00 MTA-5 Bridge Repairs Phase I

Scale: NOT TO SCALE			
No.	Revision	By	Date

Designed by:

T·Y·LIN INTERNATIONAL

CONSULTANT PROJECT MANAGER: Norman L. Baker

	By	Date		By	Date
Designed	NLB	01/2015	Checked	DSM	01/2015
Drawn	SAM	01/2015	In Charge of	NLB	01/2015

T.Y. Lin International
12 Northbrook Drive
Building A, Suite One
Falmouth, Maine 04105
TEL: (207) 781-4721
FAX: (207) 781-4753

MAINE TURNPIKE

THE GOLD STAR MEMORIAL HIGHWAY

MTA PROJECT MANAGER: Ralph Norwood

BALD HILL BRIDGE REPAIRS (MILE 71.6)

ABUTMENT 1 EAST REPAIRS

SHEET NUMBER: S-06

CONTRACT: 2015.02

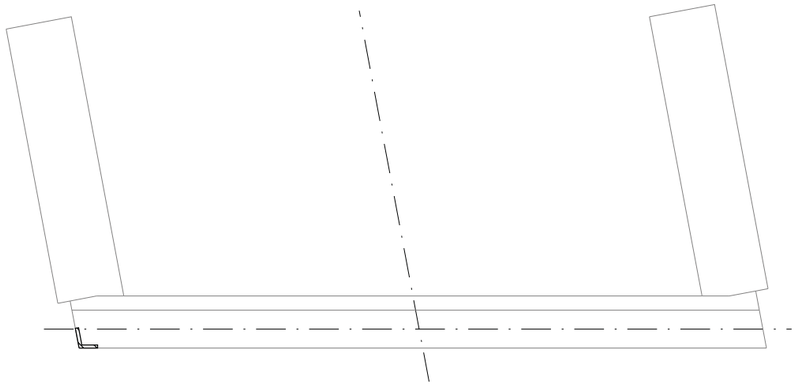

ABUTMENT 2 PLAN (EAST)

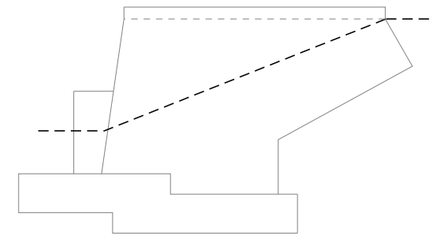

EAST WINGWALL

NOTES:

1. FOR CONCRETE REPAIR DETAIL SEE SHEET "ABUTMENT 1WEST REPAIRS.
2. FOR PROCEDURAL NOTES SEE SHEET "QUANTITIES & GENERAL NOTES".

LEGEND:

- LIMIT OF CONCRETE SURFACE REPAIRS
- LIMIT OF EPOXY INJECTED CRACK REPAIR
- EXISTING CONCRETE
- EXISTING AND PROPOSED GROUND

ABUTMENT 2 ELEVATION (EAST)

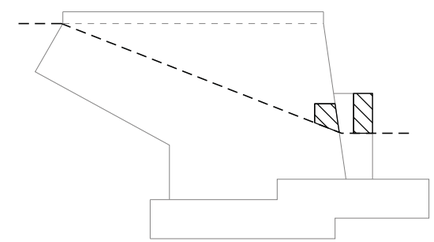

WEST WINGWALL

Scale: NOT TO SCALE

No.	Revision	By	Date

Designed by: T.Y.LIN INTERNATIONAL

CONSULTANT PROJECT MANAGER: Norman L. Baker

	By	Date		By	Date
Designed	NLB	01/2015	Checked	DSM	01/2015
Drawn	SAM	01/2015	In Charge of	NLB	01/2015

T.Y. Lin International
12 Northbrook Drive
Building A, Suite One
Falmouth, Maine 04105
TEL: (207) 781-4721
FAX: (207) 781-4753

MAINE TURNPIKE

THE GOLD STAR MEMORIAL HIGHWAY

MTA PROJECT MANAGER: Ralph Norwood

BALD HILL BRIDGE REPAIRS
(MILE 71.6)

ABUTMENT 2 EAST REPAIRS

SHEET NUMBER: S-08

CONTRACT: 2015.02

Filename: ...\034_Abut_2_East_Repair.dgn Division: Bridge Username: Date:3/20/2015
T:\Falmouth\Projects\2013\41747.00 - MTA-5 Bridge Repairs Phase I

PLAN

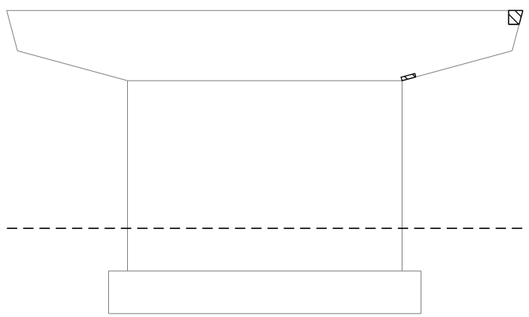

ELEVATION A

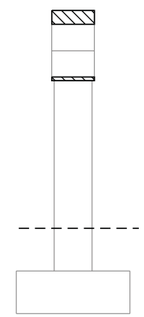

ELEVATION B

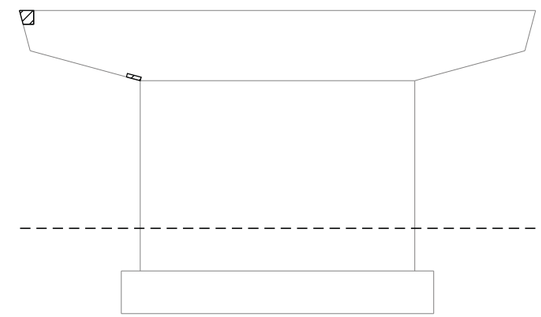

ELEVATION C

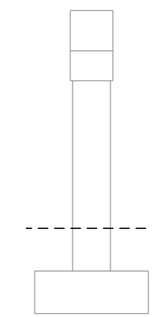

ELEVATION D

PIER 1 (WEST)

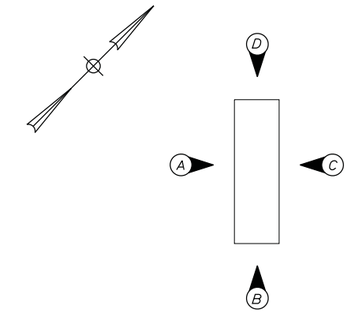

PIER ELEVATIONS

BALD HILL ROAD UNDERPASS - MM 71.6 PIERS ESTIMATED QUANTITY OF REPAIRS			
	PIER 1	PIER 2	TOTAL
PIER REPAIRS (WEST)	10 S.F.	5 S.F.	15 S.F.
PIER REPAIRS (EAST)	5 S.F.	20 S.F.	25 S.F.
EPOXY INJECTED CRACK REPAIRS (WEST)	0 L.F.	0 L.F.	0 L.F.
EPOXY INJECTED CRACK REPAIRS (EAST)	15 L.F.	0 L.F.	15 L.F.

NOTES:

1. FOR CONCRETE REPAIR DETAIL SEE SHEET "ABUTMENT 1 WEST REPAIRS".
2. FOR PROCEDURAL NOTES SEE SHEET "QUANTITIES & GENERAL NOTES".

LEGEND:

- LIMIT OF CONCRETE SURFACE REPAIRS
- LIMIT OF EPOXY INJECTED CRACK REPAIR
- EXISTING CONCRETE
- EXISTING AND PROPOSED GROUND

Scale: NOT TO SCALE

No.	Revision	By	Date

Designed by: T.Y.LIN INTERNATIONAL

CONSULTANT PROJECT MANAGER: Norman L. Baker

	By	Date		By	Date
Designed	NLB	01/2015	Checked	DSM	01/2015
Drawn	SAM	01/2015	In Charge of	NLB	01/2015

T.Y. Lin International
12 Northbrook Drive
Building A, Suite One
Falmouth, Maine 04105
TEL: (207) 781-4721
FAX: (207) 781-4753

MAINE TURNPIKE

THE GOLD STAR MEMORIAL HIGHWAY

MTA PROJECT MANAGER: Ralph Norwood

BALD HILL BRIDGE REPAIRS
(MILE 71.6)

PIER 1 WEST REPAIRS

CONTRACT: 2015.02

SHEET NUMBER: S-09

Filename: ...\035_Pier_1_West_Repair.dgn Division: Bridge Username: Date:3/20/2015
I:\Falmouth\Projects\2013\41\1747.00 MTA-5 Bridge Repairs Phase I

PLAN

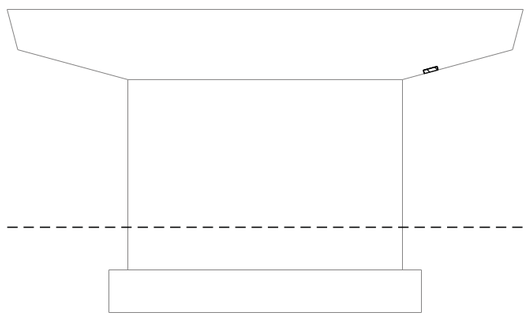

ELEVATION A

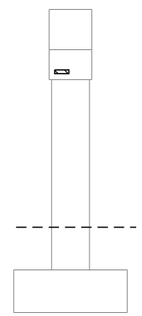

ELEVATION B

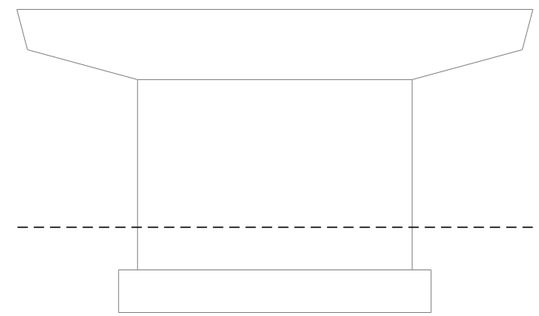

ELEVATION C

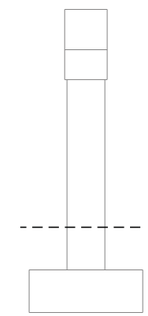

ELEVATION D

PIER 2 (WEST)

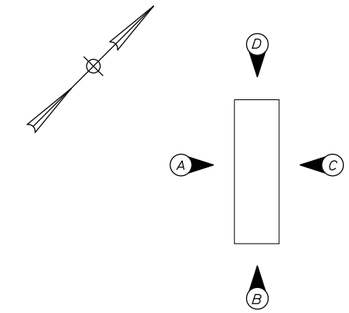

PIER ELEVATIONS

NOTES:

1. FOR CONCRETE REPAIR DETAIL SEE SHEET "ABUTMENT 1 WEST REPAIRS".
2. FOR PROCEDURAL NOTES SEE SHEET "QUANTITIES & GENERAL NOTES".

LEGEND:

- LIMIT OF CONCRETE SURFACE REPAIRS
- LIMIT OF EPOXY INJECTED CRACK REPAIR
- EXISTING CONCRETE
- EXISTING AND PROPOSED GROUND

Scale: NOT TO SCALE

No.	Revision	By	Date

Designed by: T·Y·LIN INTERNATIONAL

CONSULTANT PROJECT MANAGER: Norman L. Baker

	By	Date		By	Date
Designed	NLB	01/2015	Checked	DSM	01/2015
Drawn	SAM	01/2015	In Charge of	NLB	01/2015

T.Y. Lin International
12 Northbrook Drive
Building A, Suite One
Falmouth, Maine 04105
TEL: (207) 781-4721
FAX: (207) 781-4753

MAINE TURNPIKE

THE GOLD STAR MEMORIAL HIGHWAY

MTA PROJECT MANAGER: Ralph Norwood

BALD HILL BRIDGE REPAIRS
(MILE 71.6)

PIER 2 WEST REPAIRS

CONTRACT: 2015.02

SHEET NUMBER: S-10

Filename: ...\036_Pier_2_West_Repair.dgn Division: Bridge Username: Date:3/20/2015
I:\Falmouth\Projects\2015\41\1747.00 MTA-5 Bridge Repairs Phase I

PLAN

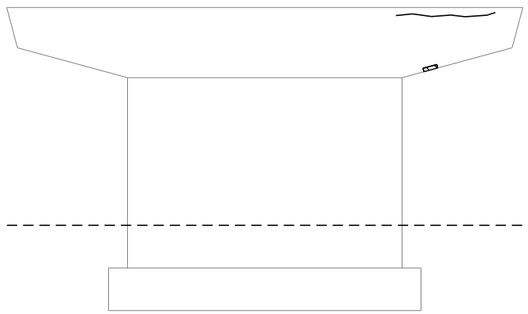

ELEVATION A

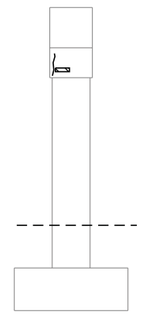

ELEVATION B

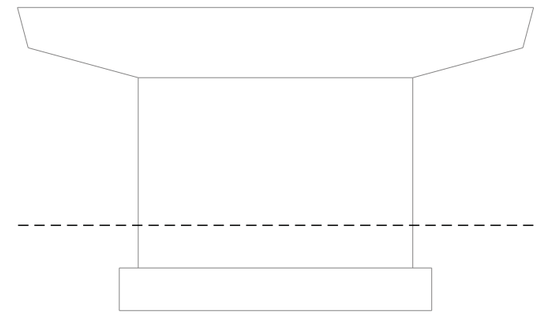

ELEVATION C

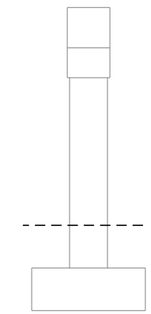

ELEVATION D

PIER 1 (EAST)

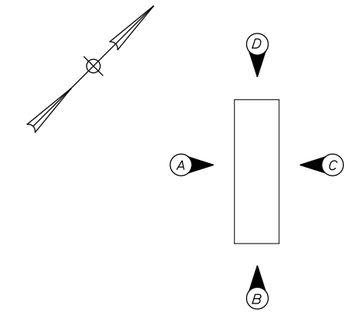

PIER ELEVATIONS

NOTES:

1. FOR CONCRETE REPAIR DETAIL SEE SHEET "ABUTMENT 1 WEST REPAIRS"
2. FOR PROCEDURAL NOTES SEE SHEET "QUANTITIES & GENERAL NOTES".

LEGEND:

- LIMIT OF CONCRETE SURFACE REPAIRS
- LIMIT OF EPOXY INJECTED CRACK REPAIR
- EXISTING CONCRETE
- EXISTING AND PROPOSED GROUND

Scale: NOT TO SCALE

No.	Revision	By	Date

Designed by: T.Y.LIN INTERNATIONAL

CONSULTANT PROJECT MANAGER: Norman L. Baker

	By	Date		By	Date
Designed	NLB	01/2015	Checked	DSM	01/2015
Drawn	SAM	01/2015	In Charge of	NLB	01/2015

T.Y. Lin International
12 Northbrook Drive
Building A, Suite One
Falmouth, Maine 04105
TEL: (207) 781-4721
FAX: (207) 781-4753

MAINE TURNPIKE

THE GOLD STAR MEMORIAL HIGHWAY

MTA PROJECT MANAGER: Ralph Norwood

BALD HILL BRIDGE REPAIRS
(MILE 71.6)

PIER 1 EAST REPAIRS

CONTRACT: 2015.02

SHEET NUMBER: S-11

Filename: ...\037_Pier_1_East_Repair.dgn Division: Bridge Username: Date:3/20/2015
I:\Falmouth\Projects\2013\41\1747.00 MTA-5 Bridge Repairs Phase I

PLAN

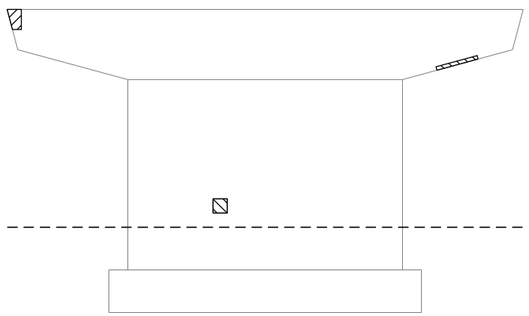

ELEVATION A

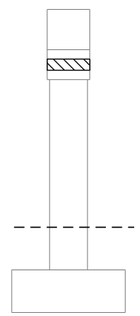

ELEVATION B

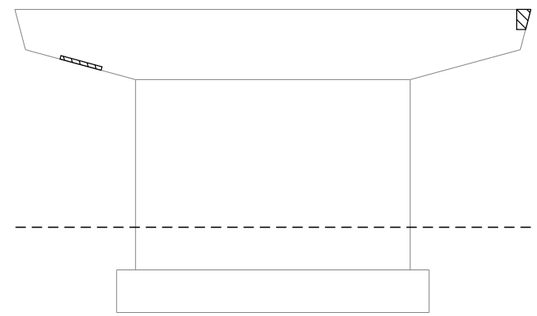

ELEVATION C

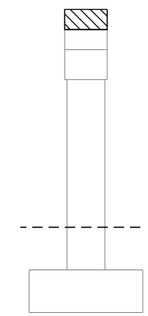

ELEVATION D

PIER 2 (EAST)

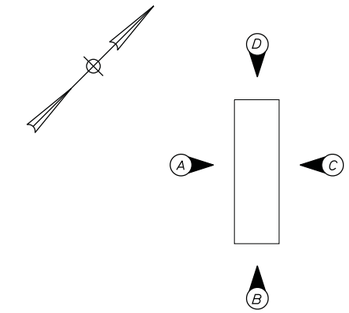

PIER ELEVATIONS

NOTES:

1. FOR CONCRETE REPAIR DETAIL SEE SHEET "ABUTMENT 1 WEST REPAIRS".
2. FOR PROCEDURAL NOTES SEE SHEET "QUANTITIES & GENERAL NOTES".

LEGEND:

- LIMIT OF CONCRETE SURFACE REPAIRS
- LIMIT OF EPOXY INJECTED CRACK REPAIR
- EXISTING CONCRETE
- EXISTING AND PROPOSED GROUND

Scale: NOT TO SCALE

No.	Revision	By	Date

Designed by: T·Y·LIN INTERNATIONAL

CONSULTANT PROJECT MANAGER: Norman L. Baker

	By	Date		By	Date
Designed	NLB	01/2015	Checked	DSM	01/2015
Drawn	SAM	01/2015	In Charge of	NLB	01/2015

T.Y. Lin International
12 Northbrook Drive
Building A, Suite One
Falmouth, Maine 04105
TEL: (207) 781-4721
FAX: (207) 781-4753

MAINE TURNPIKE

THE GOLD STAR MEMORIAL HIGHWAY

MTA PROJECT MANAGER: Ralph Norwood

BALD HILL BRIDGE REPAIRS
(MILE 71.6)

PIER 2 EAST REPAIRS

CONTRACT: 2015.02

SHEET NUMBER: S-12

Filename: ...\038_Pier_2_East_Repair.dgn Division: Bridge Username: Date:3/20/2015
I:\Falmouth\Projects\2015\41\1747.00 MTA-5 Bridge Repairs Phase I

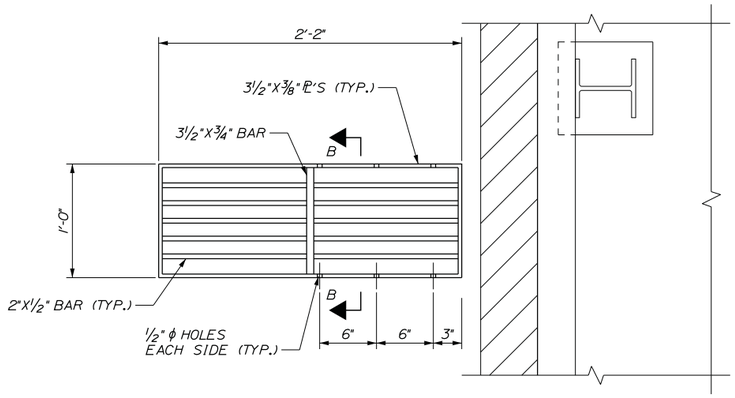

PROPOSED PLAN
N.T.S.

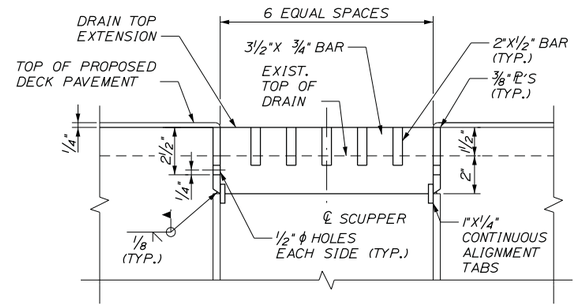

SECTION B-B
3"=1'-0"

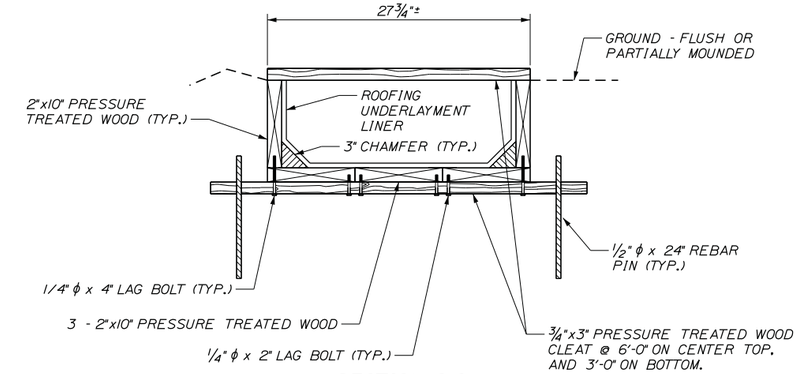

SECTION C-C

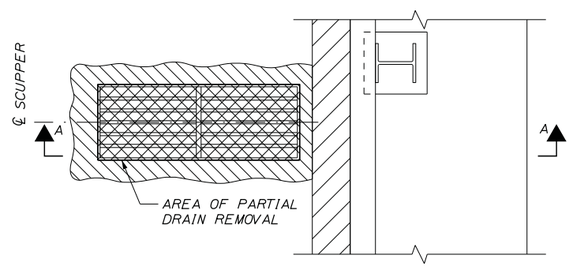

EXISTING PLAN
N.T.S.

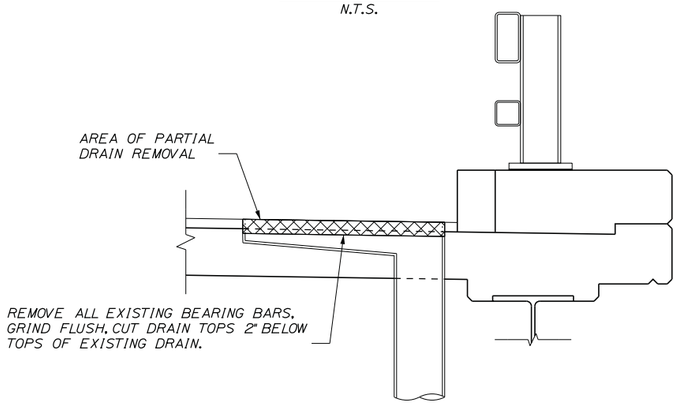

SECTION A-A
N.T.S.

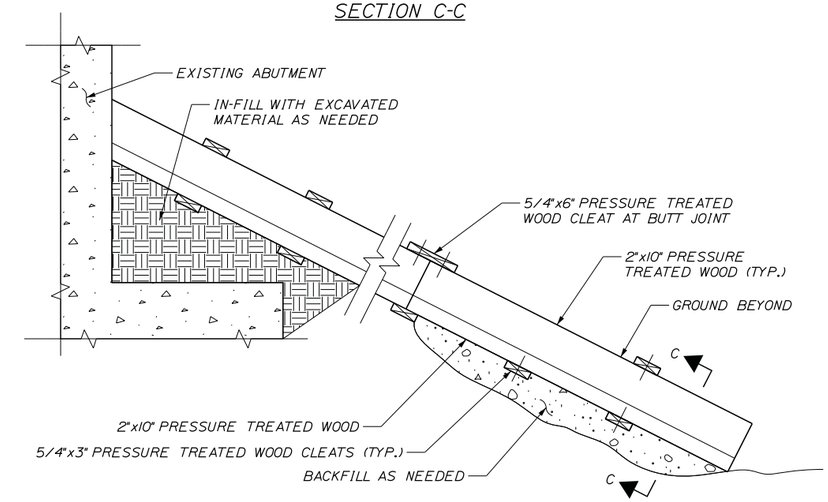

TROUGH ELEVATION

BRIDGE DRAIN GRATE MODIFICATION NOTES:

1. PRIOR TO STARTING THE WORK THE CONTRACTOR SHALL FIELD MEASURE EACH DRAIN. THIS INFORMATION SHALL BE USED FOR THE FABRICATION OF THE DRAIN GRATE EXTENSIONS.
2. CONTRACTOR SHALL CLEANLY CUT AND REMOVE THE TOP OF EXISTING DRAINS 2" BELOW EXISTING TOP OF DRAIN. THE DECK CONCRETE AROUND THE FULL PERIMETER OF THE DRAIN SHALL BE MECHANICALLY REMOVED TO A MINIMUM DEPTH OF 1½" BY A MINIMUM WIDTH OF 3".
3. ALL PLATES SHALL CONFORM TO ASTM A 36. DRAIN GRATE EXTENSIONS SHALL BE HOT DIP GALVANIZED AFTER FABRICATION.
4. ALIGNMENT TABS ARE OPTIONAL. AFFIX AND GALVANIZE WITH DRAIN GRATE EXTENSIONS. IF USED
5. PREPARE EXISTING DRAIN BODY AND NEW DRAIN TOP GRATE EXTENSION FOR FIELD WELD. FIELD WELD THE EXTERIOR PERIMETER JOINT BETWEEN EXISTING DRAIN BODY AND NEW TOP OF DRAIN AFTER WELDING. THE INTERIOR AND EXTERIOR OF THE NEW TOP OF DRAIN SHALL BE COATED WITH AN APPROVED COLD GALVANIZING COMPOUND.
6. AREAS OF CONCRETE REMOVAL SHALL BE PATCHED USING A SHALLOW CONCRETE PATCHING MATERIAL SELECTED FROM THE MTA APPROVED PRODUCTS LIST. CONCRETE PATCH SHALL BE PLACED, FINISHED AND CURED IN ACCORDANCE WITH THE MANUFACTURERS SPECIFICATIONS.
7. PAYMENT FOR ALL LABOR, EQUIPMENT AND MATERIALS ASSOCIATED WITH THE BRIDGE DRAIN MODIFICATION WILL BE UNDER ITEM 502.701, "BRIDGE DRAIN GRATE MODIFICATION."

WOOD DRAIN TROUGH NOTES:

1. REPLACE EXISTING WOOD DRAIN TROUGHS WITH PRESSURE TREATED WOOD DRAIN TROUGH AT EACH EXISTING BRIDGE DRAIN.
2. WOOD DRAIN TROUGH AND ROOFING UNDERLAYMENT LINER SHALL BE PAID UNDER ITEM 603.91, PRESSURE TREATED WOOD DRAIN TROUGH.
3. EXCAVATION, AND BACKFILL TO INSTALL PRESSURE TREATED WOOD DRAIN TROUGH SHALL BE INCIDENTAL TO ITEM 603.91.
4. MECHANICALLY ATTACH WOOD DOWNSPOUT TO ABUTMENTS WITH TWO 3/8" DIA. X 6" BOLTS INTO DROP-IN ANCHORS.
5. BUTT SPLICE 2"X10" PRESSURE TREATED WOOD MEMBERS AT CLEATS (PROVIDE 5/4"X6" CLEATS AT BUTT SPLICES); OR USE 2"X10"X16" PRESSURE TREATED WOOD SPLICE BOARDS. SPIKE WITH 10-P GALVANIZED NAILS OR SCREWS.
6. INSTALL ROOFING UNDERLAYENT (ICE AND WATER SHIELD) LINER AND SECURE WITH GALVANIZED ROOFING NAILS PRIOR TO INSTALLING TOP CLEATS.

Scale: AS NOTED

No.	Revision	By	Date

Designed by: T·Y·LIN INTERNATIONAL

CONSULTANT PROJECT MANAGER: Norman L. Baker

	By	Date		By	Date
Designed	NLB	01/2015	Checked	DSM	01/2015
Drawn	SAM	01/2015	In Charge of	NLB	01/2015

T.Y. Lin International
12 Northbrook Drive
Building A, Suite One
Falmouth, Maine 04105
TEL: (207) 781-4721
FAX: (207) 781-4753

MAINE TURNPIKE
THE GOLD STAR MEMORIAL HIGHWAY

MTA PROJECT MANAGER: Ralph Norwood

BALD HILL BRIDGE REPAIRS
(MILE 71.6)

MISCELLANEOUS DETAILS 1

SHEET NUMBER: MD-01

CONTRACT: 2015.02

Filename: ...\MSTA\039_Misc_Details.dgn Division: Bridge Username: Date:3/20/2015
T:\Falmouth\Projects\2013\41747.00 - MTA-5 Bridge Repairs Phase I

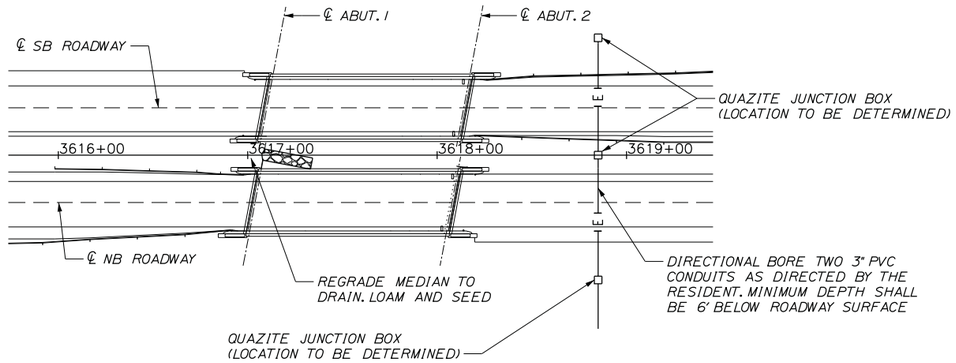

LOCATION PLAN
NTS

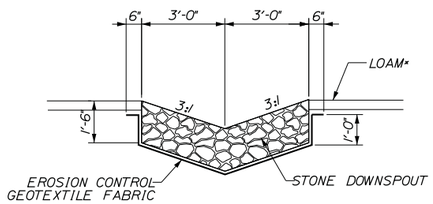

SECTION A-A
NTS

* SEE TYPICAL SECTIONS FOR DEPTH

1 LF OF DOWNSPOUT= 0.33 CY OF STONE DITCH PROTECTION
1 LF OF DOWNSPOUT= 1.04 SY OF EROSION CONTROL GEOTEXTILE FABRIC

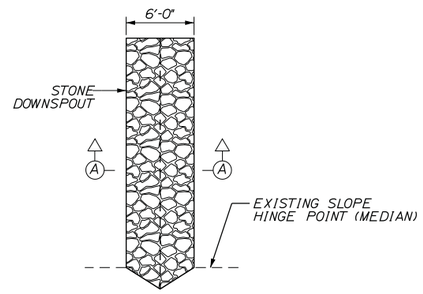

PLAN
NTS

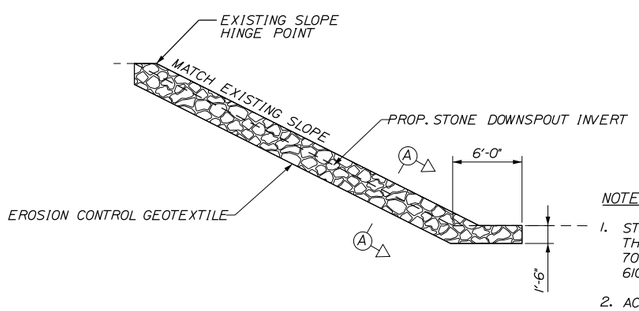

NOTES:

1. STONE FOR STONE DOWNSPOUTS SHALL MEET THE REQUIREMENTS OF MAINEDOT SPECIFICATION 703.29 AND WILL BE PAID FOR UNDER ITEM 610.18. STONE DITCH PROTECTION.
2. ACTUAL LOCATION AND LENGTH OF STONE DOWNSPOUT TO BE DETERMINED IN THE FIELD.

STONE DOWNSPOUT
NTS

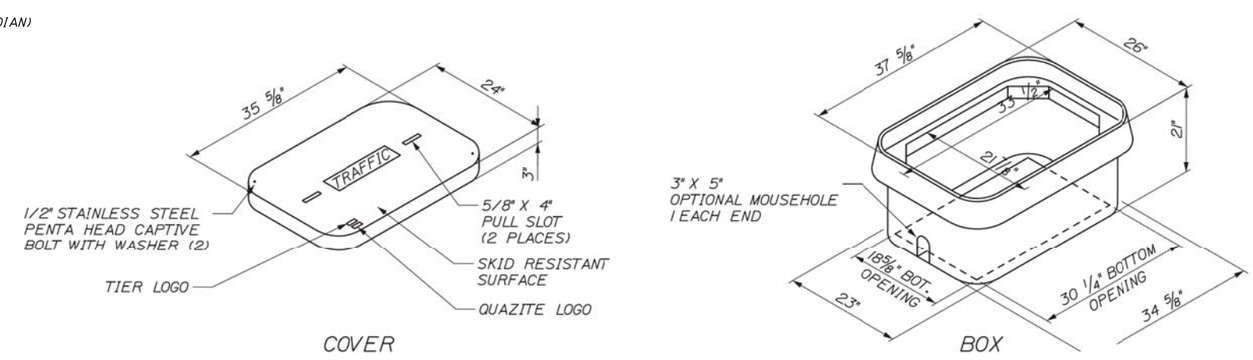

QUAZITE BOX DETAIL
NTS

Scale: NOT TO SCALE

No.	Revision	By	Date

Designed by:

T·Y·LIN INTERNATIONAL

CONSULTANT PROJECT MANAGER: Norman L. Baker

	By	Date		By	Date
Designed	ARG	01/2015	Checked	JRH	01/2015
Drawn	SAM	01/2015	In Charge of	NLB	01/2015

T.Y. Lin International
12 Northbrook Drive
Building A, Suite One
Falmouth, Maine 04105
TEL: (207) 781-4721
FAX: (207) 781-4753

MAINE TURNPIKE

THE GOLD STAR MEMORIAL HIGHWAY

MTA PROJECT MANAGER: Ralph Norwood

BALD HILL BRIDGE REPAIRS
(MILE 71.6)

MISCELLANEOUS DETAILS 2

SHEET NUMBER: MD-02

CONTRACT: 2015.02

Filename: ...\MSTA\040_Misc_Details.dgn Division: Bridge Username: Date:3/20/2015
I:\Falmouth\Projects\2013\41747.00 - MTA-5 Bridge Repairs Phase I

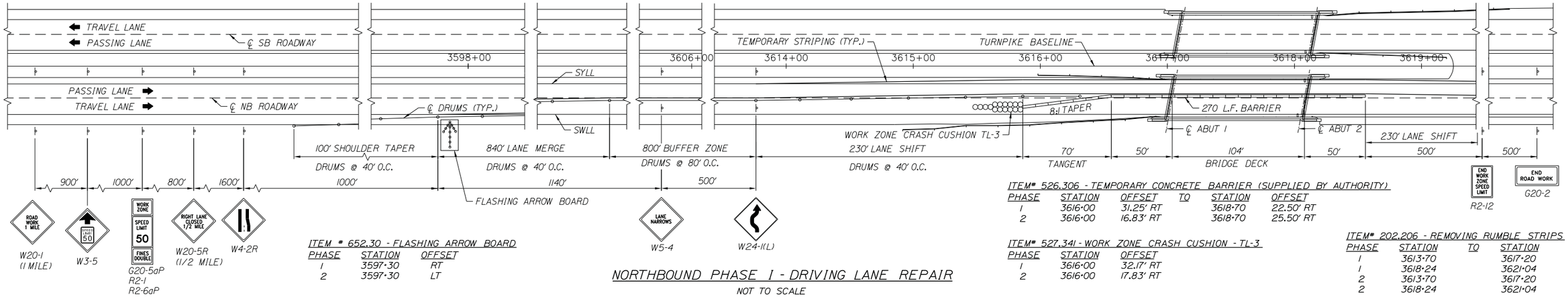

ITEM # 652.30 - FLASHING ARROW BOARD

PHASE	STATION	OFFSET
1	3597+30	RT
2	3597+30	LT

ITEM# 526.306 - TEMPORARY CONCRETE BARRIER (SUPPLIED BY AUTHORITY)

PHASE	STATION	OFFSET	TO	STATION	OFFSET
1	3616+00	31.25' RT		3618+70	22.50' RT
2	3616+00	16.83' RT		3618+70	25.50' RT

ITEM# 527.341 - WORK ZONE CRASH CUSHION - TL-3

PHASE	STATION	OFFSET
1	3616+00	32.17' RT
2	3616+00	17.83' RT

ITEM# 202.206 - REMOVING RUMBLE STRIPS

PHASE	STATION	TO	STATION
1	3613+70		3617+20
1	3618+24		3621+04
2	3613+70		3617+20
2	3618+24		3621+04

NORTHBOUND PHASE I - DRIVING LANE REPAIR

NOT TO SCALE

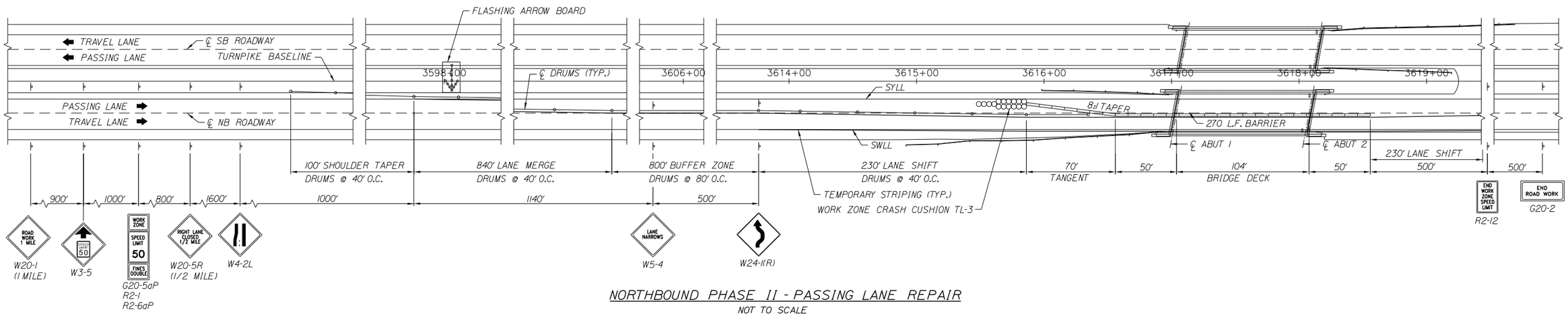

NORTHBOUND PHASE II - PASSING LANE REPAIR

NOT TO SCALE

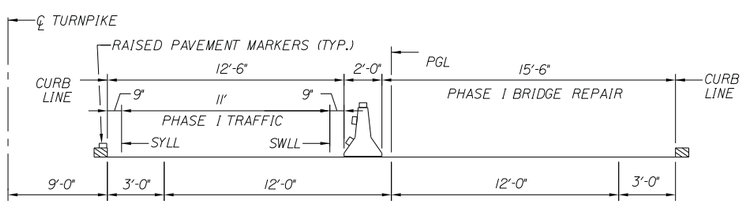

BALD HILL ROAD BRIDGE DECK CROSS SECTION
PHASE I - DRIVING LANE REPAIR

NOT TO SCALE
(LOOKING IN DIRECTION OF TRAFFIC)

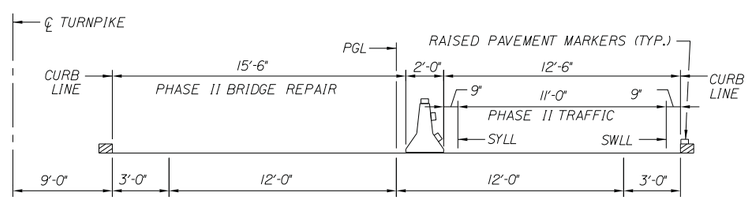

BALD HILL ROAD BRIDGE DECK CROSS SECTION
PHASE II - PASSING LANE REPAIR

NOT TO SCALE
(LOOKING IN DIRECTION OF TRAFFIC)

NOTES:

1. FOR STRIPING REMOVAL, TEMPORARY STRIPING, AND TEMPORARY STRIPING REMOVAL, SEE STRIPING TABLE ON SHEET MT-2.
2. TEMPORARY RAISED PAVEMENT MARKERS SHALL BE INSTALLED ON THE TEMPORARY CONCRETE BARRIER (SEE BARRIER SPECIFICATION). TEMPORARY RAISED PAVEMENT MARKERS SHALL ALSO BE INSTALLED ALONG THE NON-BARRIER SIDE OF ALL LANE SHIFTS AND ACROSS THE BRIDGE DECK CURB. MARKERS SHALL BE SPACED AT 30' ON CENTER.
3. INSTALL REFLECTORIZED BEAM GUARDRAIL DELINEATORS ON EXISTING GUARDRAIL IN AREAS WHERE TRAFFIC IS SHIFTED OVER THE EXISTING WHITE OR YELLOW EDGE LINE, AS DIRECTED IN SPECIAL PROVISION 606.

Scale: NOT TO SCALE

No.	Revision	By	Date

Designed by: T·Y·LIN INTERNATIONAL

CONSULTANT PROJECT MANAGER: Norman L. Baker

	By	Date		By	Date
Designed	ARG	9/20/2014	Checked	JRH	10/02/2014
Drawn	PJB	10/02/2014	In Charge of	NLB	10/02/2014

T.Y. Lin International
12 Northbrook Drive
Building A, Suite One
Falmouth, Maine 04105
TEL: (207) 781-4721
FAX: (207) 781-4753

MAINE TURNPIKE
THE GOLD STAR MEMORIAL HIGHWAY

MTA PROJECT MANAGER: Ralph Norwood

BALD HILL BRIDGE REPAIRS (MILE 71.6)

MAINTENANCE OF TRAFFIC 1

SHEET NUMBER: MT-01

CONTRACT: 2015.02

Filename: ...\ms1a\041_MOT_Mainline_1.dgn Division: Bridge Username: Date:3/20/2015
T:\Falmouth\Projects\2013\41\1747.00 MTA-5 Bridge Repairs Phase I

ITEM# 526.306 - TEMPORARY CONCRETE BARRIER (SUPPLIED BY AUTHORITY)

PHASE	STATION	OFFSET	TO	STATION	OFFSET
1	3616+84	23.50' LT		3619+54	32.17' LT
2	3616+84	26.50' LT		3619+54	17.83' LT

ITEM# 527.341 - WORK ZONE CRASH CUSHION - TL-3

PHASE	STATION	OFFSET
1	3619+54	32.17' LT
2	3619+54	17.83' LT

ITEM # 652.30 - FLASHING ARROW BOARD

PHASE	STATION	OFFSET
1	3638+24	LT
2	3638+24	RT

ITEM# 202.206 - REMOVING RUMBLE STRIPS

PHASE	STATION	TO	STATION
1	3614+50		3617+30
1	3618+34		3621+84
2	3614+50		3617+30
2	3618+34		3621+84

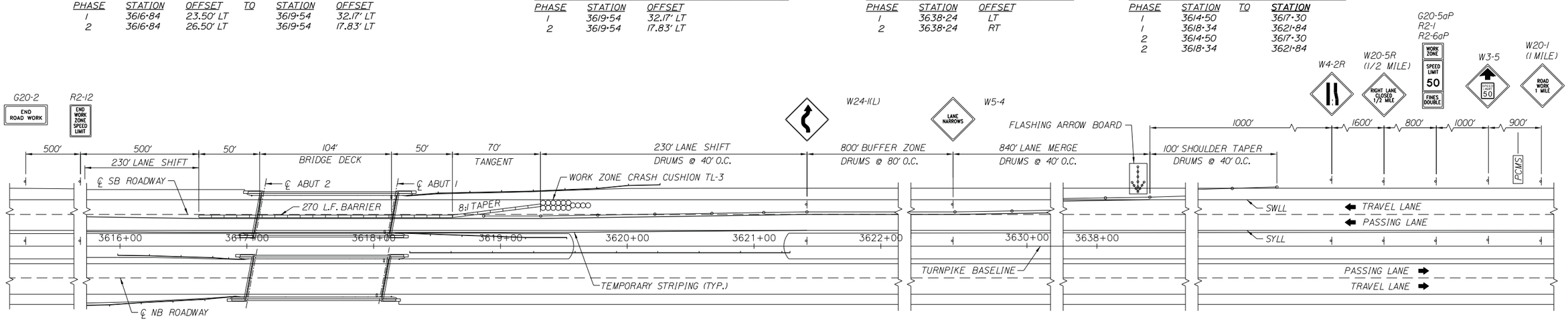

SOUTHBOUND PHASE I - DRIVING LANE REPAIR

NOT TO SCALE

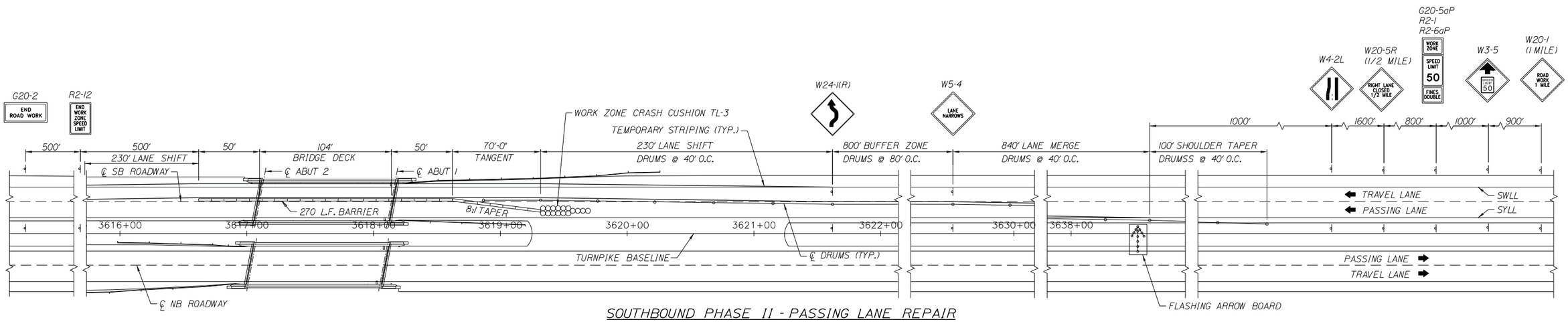

SOUTHBOUND PHASE II - PASSING LANE REPAIR

NOT TO SCALE

PAVEMENT STRIPING TABLE

	PHASE I - DRIVING LANE REPAIR						PHASE II - PASSING LANE REPAIR					
	NORTHBOUND BARREL			SOUTHBOUND BARREL			NORTHBOUND BARREL			SOUTHBOUND BARREL		
MARKING TYPE	START STATION	END STATION	LENGTH (FT.)	START STATION	END STATION	LENGTH (FT.)	START STATION	END STATION	LENGTH (FT.)	START STATION	END STATION	LENGTH (FT.)
SYLL - REMOVAL	3613+70	3621+04	734	3614+50	3621+84	734	-	-	0	-	-	0
BWLL - REMOVAL	3597+30	3605+70	840	3629+84	3638+24	840	-	-	0	-	-	0
SWLL - REMOVAL	-	-	0	-	-	0	3613+70	3621+04	734	3614+50	3621+84	734
SYLL - TEMP	3613+70	3621+04	734	3614+50	3621+84	734	3597+30	3621+04	2374	3614+50	3638+24	2374
SWLL - TEMP	3597+30	3621+04	2374	3614+50	3638+24	2374	3613+70	3621+04	734	3614+50	3621+84	734

Scale: NOT TO SCALE

No.	Revision	By	Date

Designed by: T.Y.LIN INTERNATIONAL

CONSULTANT PROJECT MANAGER: Norman L. Baker

	By	Date		By	Date
Designed	ARG	9/20/2014	Checked	JRH	10/02/2014
Drawn	PJB	10/02/2014	In Charge of	NLB	10/02/2014

T.Y. Lin International
12 Northbrook Drive
Building A, Suite One
Falmouth, Maine 04105
TEL: (207) 781-4721
FAX: (207) 781-4753

MAINE TURNPIKE

THE GOLD STAR MEMORIAL HIGHWAY

MTA PROJECT MANAGER: Ralph Norwood

BALD HILL BRIDGE REPAIRS
(MILE 71.6)

MAINTENANCE OF TRAFFIC 2

SHEET NUMBER: MT-02

CONTRACT: 2015.02

Date:3/20/2015
Username:
Division: Bridge
Filename: ...\msta\041_MOT_Mainline_1.dgn
T:\Falmouth\Projects\2013\41747.00 - MTA-5 Bridge Repairs Phase I

ITEM# 526.306 - TEMPORARY CONCRETE BARRIER (SUPPLIED BY AUTHORITY)

PHASE	STATION	OFFSET	TO	STATION	OFFSET
1	3590+04	22.00' LT		3593+44	42.83' LT
2	3590+04	28.83' LT		3593+24	13.00' LT

ITEM# 527.341 - WORK ZONE CRASH CUSHION - TL-3

PHASE	STATION	OFFSET
1	3593+20	42.83' LT
2	3593+20	13.00' LT

ITEM # 652.30 - FLASHING ARROW BOARD

PHASE	STATION	OFFSET
1	3611+44	LT
2	3613+14	LT

ITEM# 202.206 - REMOVING RUMBLE STRIPS

PHASE	STATION	TO	STATION
1	3588+64		3590+54
1	3591+14		3595+04
2	3587+24		3590+54
2	3591+14		3596+44

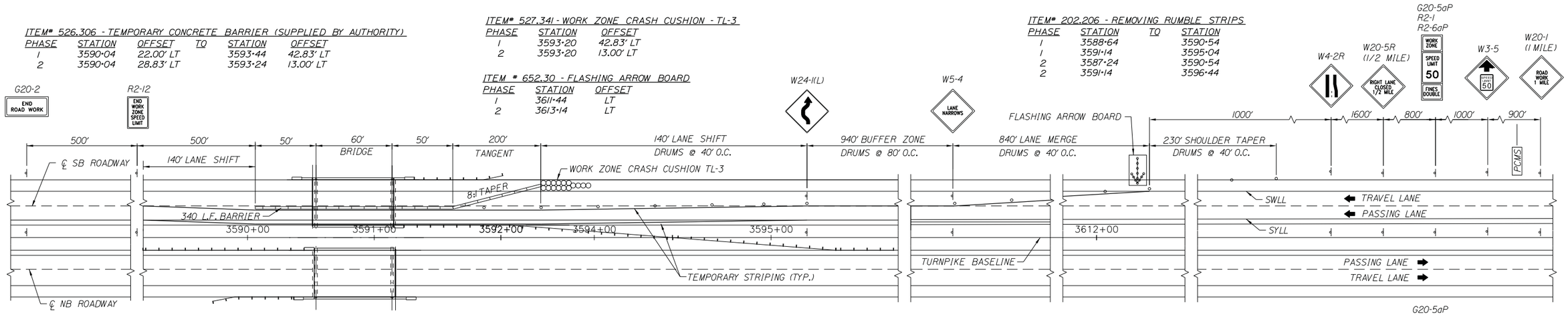

SOUTHBOUND PHASE I - DRIVING LANE REPAIR

NOT TO SCALE

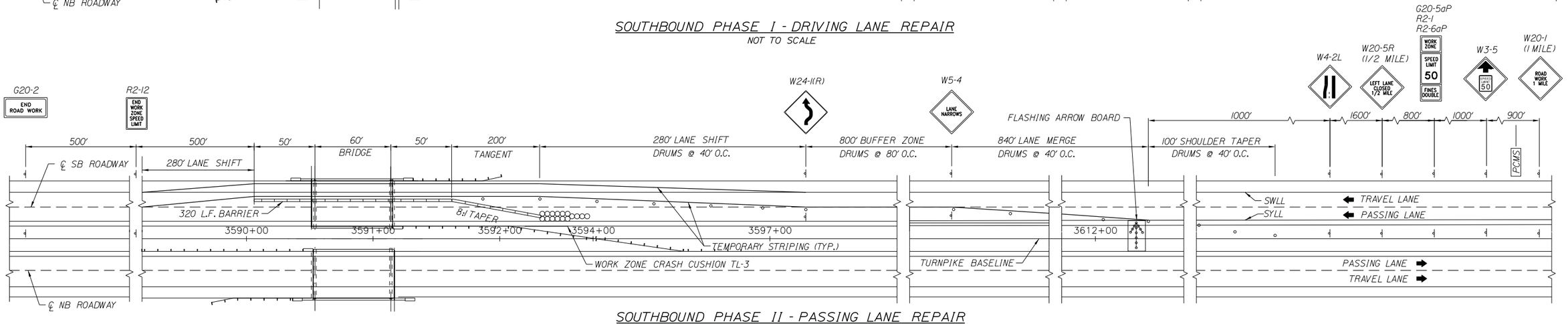

SOUTHBOUND PHASE II - PASSING LANE REPAIR

NOT TO SCALE

PAVEMENT STRIPING TABLE

	PHASE I - DRIVING LANE REPAIR						PHASE II - PASSING LANE REPAIR					
	NORTHBOUND BARREL			SOUTHBOUND BARREL			NORTHBOUND BARREL			SOUTHBOUND BARREL		
MARKING TYPE	START STATION	END STATION	LENGTH (FT.)	START STATION	END STATION	LENGTH (FT.)	START STATION	END STATION	LENGTH (FT.)	START STATION	END STATION	LENGTH (FT.)
BWLL - REMOVAL	-	-	0	3604+44	3612+84	840	-	-	0	-	-	0
	-	-	0	-	-	0	-	-	0	-	-	0
SWLL - REMOVAL	-	-	0	-	-	0	-	-	0	3587+24	3596+44	920
SYLL - REMOVAL	-	-	0	3588+64	3595+04	640	-	-	0	-	-	0
	-	-	0	-	-	0	-	-	0	-	-	0
	-	-	0	-	-	0	-	-	0	-	-	0
SYLL - TEMP	-	-	0	3588+64	3595+04	640	-	-	0	3587+24	3612+84	2560
SWLL - TEMP	-	-	0	3588+64	3612+84	2420	-	-	0	3587+24	3596+44	920

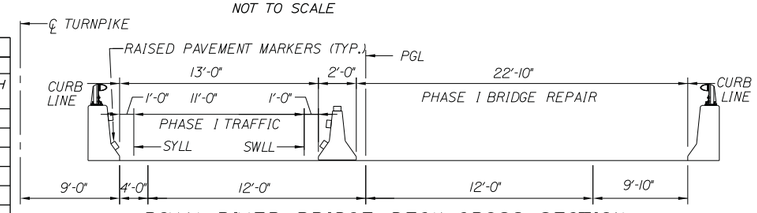

ROYAL RIVER BRIDGE DECK CROSS SECTION PHASE I - DRIVING LANE REPAIR

NOT TO SCALE
(LOOKING IN DIRECTION OF TRAFFIC)

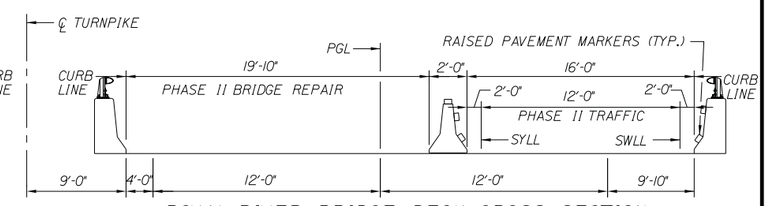

ROYAL RIVER BRIDGE DECK CROSS SECTION PHASE II - PASSING LANE REPAIR

NOT TO SCALE
(LOOKING IN DIRECTION OF TRAFFIC)

NOTES:

1. FOR STRIPING REMOVAL, TEMPORARY STRIPING, AND TEMPORARY STRIPING REMOVAL ASSOCIATED WITH THE ROYAL RIVER SB BRIDGE REPAIRS, SEE STRIPING TABLE ON THIS SHEET.
2. INSTALL REFLECTORIZED BEAM GUARDRAIL DELINEATORS ON EXISTING GUARDRAIL IN AREAS WHERE TRAFFIC IS SHIFTED OVER THE EXISTING WHITE OR YELLOW EDGE LINE, AS DIRECTED IN SPECIAL PROVISION 606.
3. SEE SHEET T-3 "TRAFFIC CONTROL 3" FOR MAINTENANCE OF TRAFFIC DURING ROYAL RIVER BRIDGE NORTHBOUND REPAIRS.
4. TEMPORARY RAISED PAVEMENT MARKERS SHALL BE INSTALLED ON THE TEMPORARY CONCRETE BARRIER (SEE BARRIER SPECIFICATION). TEMPORARY RAISED PAVEMENT MARKERS SHALL ALSO BE INSTALLED ALONG THE NON-BARRIER SIDE OF ALL LANE SHIFTS AND ACROSS THE BRIDGE PARAPET. MARKERS SHALL BE SPACED AT 30' ON CENTER.
5. PRIOR TO INSTALLING CONSTRUCTION SIGNING, THE CONTRACTOR SHALL NOTIFY THE RESIDENT OF ANTICIPATED CONSTRUCTION SEQUENCING FOR THE PROJECT. THE MAINTENANCE OF TRAFFIC LAYOUT, INCLUDING SIGNING, STRIPING, AND LOCATION OF CONTROL DEVICES, SHALL BE MODIFIED BY THE CONTRACTOR AS NECESSARY TO ACCOMMODATE THEIR ANTICIPATED CONSTRUCTION SEQUENCE.

Scale: NOT TO SCALE

No.	Revision	By	Date

Designed by: T·Y·LIN INTERNATIONAL

CONSULTANT PROJECT MANAGER: Norman L. Baker

	By	Date		By	Date
Designed	DWB	03/2015	Checked	JRH	03/2015
Drawn	PJB	03/13/2015	In Charge of	NLB	03/2015

T.Y. Lin International
12 Northbrook Drive
Building A, Suite One
Falmouth, Maine 04105
TEL: (207) 781-4721
FAX: (207) 781-4753

MAINE TURNPIKE
THE GOLD STAR MEMORIAL HIGHWAY

MTA PROJECT MANAGER: Ralph Norwood

ROYAL RIVER BRIDGE REPAIRS (MILE 71.1)

MAINTENANCE OF TRAFFIC 1

CONTRACT: 2015.02

SHEET NUMBER: MT-03

Filename: ...\msta\043_MOT_RoyalRiver_1.dgn Division: Bridge Username: Date:3/20/2015
T:\Falmouth\Projects\2015\41747.00 - MTA-5, Bridge Repairs Phase I

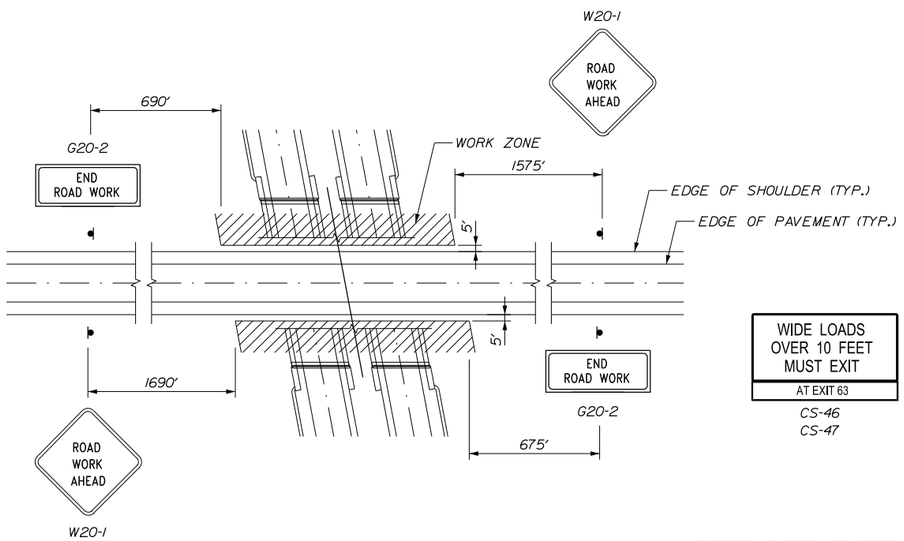

BALD HILL ROAD - TRAFFIC CONTROL PLAN A

NOT TO SCALE
(REQUIRED AT ALL TIMES THROUGHOUT BRIDGE REPAIRS)

ABBREVIATIONS FOR ALL M.O.T. PLANS

BWLL - BROKEN WHITE LANE LINE
SWEL - SOLID WHITE EDGE LINE
SYEL - SOLID YELLOW EDGE LINE
TBWLL - TEMPORARY BROKEN WHITE LANE LINE
TSWEL - TEMPORARY SOLID WHITE EDGE LINE
TSYEL - TEMPORARY SOLID YELLOW EDGE LINE

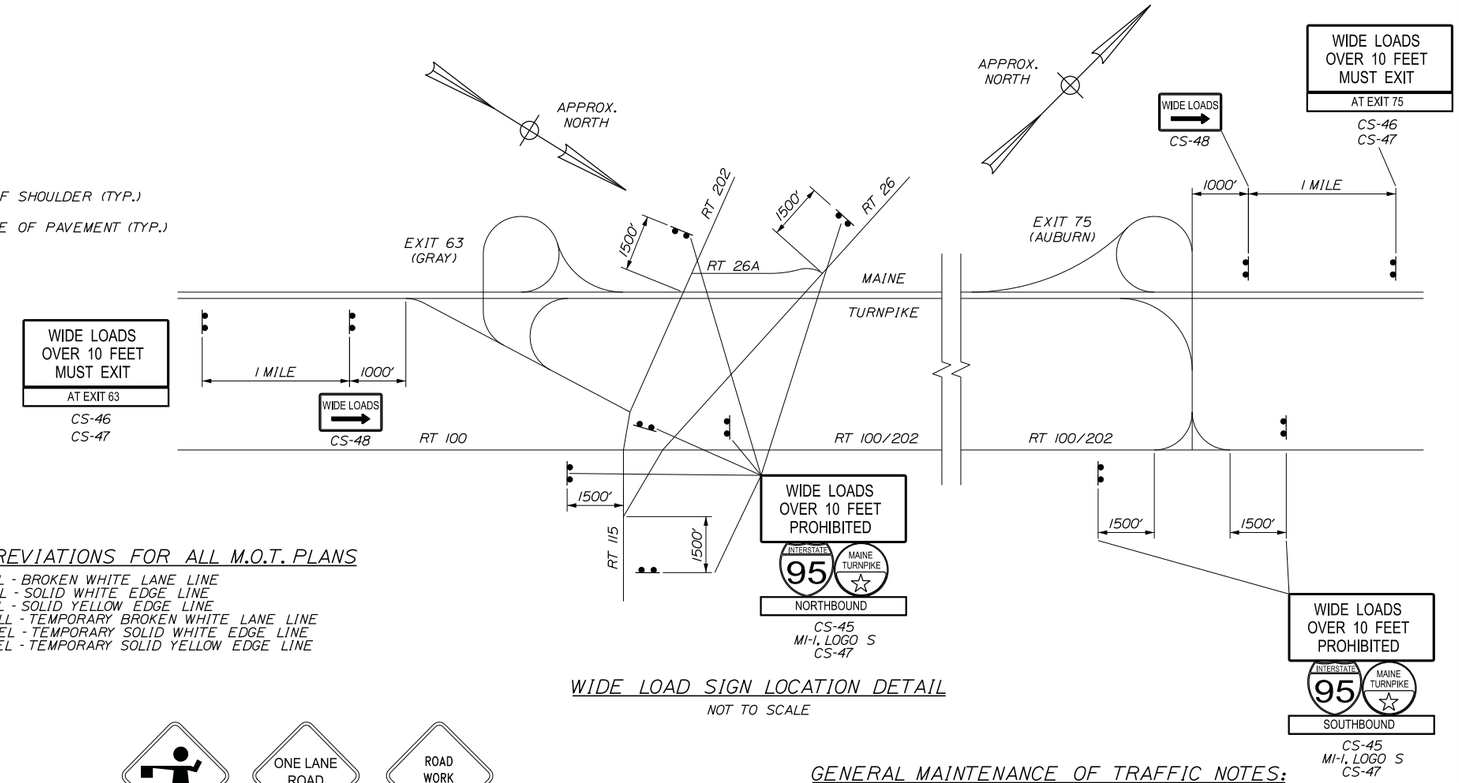

WIDE LOAD SIGN LOCATION DETAIL

NOT TO SCALE

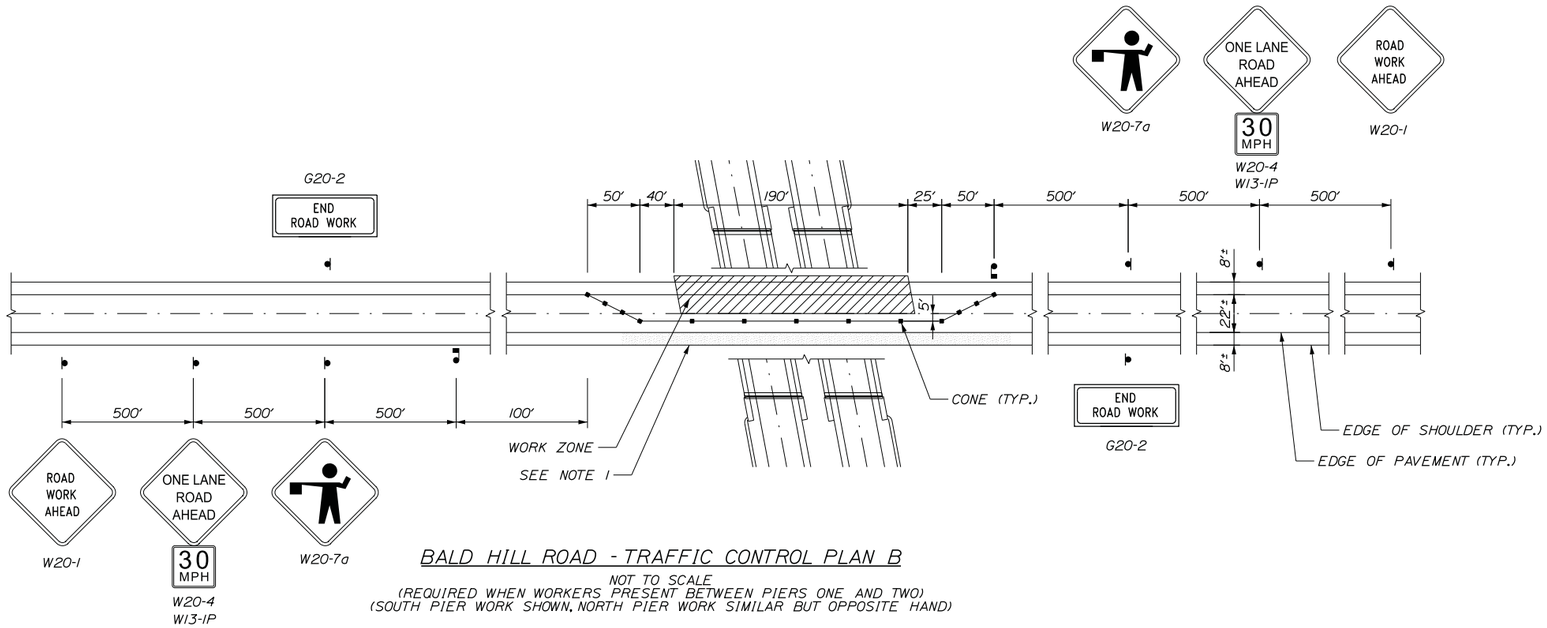

BALD HILL ROAD - TRAFFIC CONTROL PLAN B

NOT TO SCALE
(REQUIRED WHEN WORKERS PRESENT BETWEEN PIERS ONE AND TWO)
(SOUTH PIER WORK SHOWN, NORTH PIER WORK SIMILAR BUT OPPOSITE HAND)

GENERAL MAINTENANCE OF TRAFFIC NOTES:

1. ALL WORK TO CONFORM TO MAINE DEPARTMENT OF TRANSPORTATION STANDARD SPECIFICATIONS FOR HIGHWAY AND BRIDGES, EXCEPT AS MODIFIED BY THE MAINE TURNPIKE AUTHORITY'S GENERAL AND SPECIFIC PROVISIONS.
2. ALL PAVEMENT STRIPING & SIGNING SHALL BE IN ACCORDANCE WITH THE "MANUAL ON UNIFORM TRAFFIC CONTROL DEVICES", USDOT, FHWA, LATEST EDITION. NOTE THERE IS A 2009 EDITION OF MUTCD.
3. THESE PLANS SHOW THE GENERAL CONDITION FOR TRAFFIC CONTROL. DURING CONSTRUCTION, SLIGHT MODIFICATIONS IN CONSTRUCTION PROCEDURE MAY OCCUR AND MAY REQUIRE SOME MINOR ADJUSTMENTS TO BE MADE IN THE FIELD. ALL PROCEDURES MUST BE APPROVED BY THE RESIDENT.
4. THE CONTRACTOR SHALL REMOVE ALL PAVEMENT MARKINGS THAT CONFLICT WITH PROPOSED PAVEMENT MARKINGS IN ACCORDANCE WITH THE SPECIFICATIONS AND MUTCD. PAYMENT SHALL BE MADE UNDER ITEM 627.77 - REMOVING PAVEMENT MARKINGS.
5. EXPOSED BARRIER ENDS SHALL BE PROTECTED BY A WORK ZONE CRASH CUSHION, AS NOTED ON THE PLANS.
6. THE CONTRACTOR SHALL COORDINATE WITH THE RESIDENT ENGINEER PRIOR TO ORDERING OR INSTALLING ANY WIDE LOAD SIGNAGE.

NOTES:

1. REGRADE SHOULDER AS NECESSARY FOR TRAFFIC SHIFT. PAYMENT FOR GRAVEL SHALL BE PAID UNDER ITEM 411.09 - UNTREATED AGGREGATE SURFACE COURSE.
2. CONES SHALL BE PLACED 30 FEET O.C. ON TANGENTS, 15 FEET O.C. ON TAPERS.

Scale: NOT TO SCALE

No.	Revision	By	Date

Designed by: T·Y·LIN INTERNATIONAL

CONSULTANT PROJECT MANAGER: Norman L. Baker

	By	Date		By	Date
Designed	ARG	09/20/2014	Checked	JRH	10/02/2014
Drawn	PJB	10/02/2014	In Charge of	NLB	10/02/2014

T.Y. Lin International
12 Northbrook Drive
Building A, Suite One
Falmouth, Maine 04105
TEL: (207) 781-4721
FAX: (207) 781-4753

MAINE TURNPIKE
THE GOLD STAR MEMORIAL HIGHWAY

MTA PROJECT MANAGER: Ralph Norwood

BALD HILL & ROYAL RIVER BRIDGE REPAIRS
(MILE 71.6) (MILE 71.1)

LOCAL ROAD AND WIDE LOAD SIGNING

SHEET NUMBER: MT-04
CONTRACT: 2015.02

Filename: ...\044_MOT_Wide_Load_Signing.dgn Division: Bridge Username: Date:3/20/2015
I:\Falmouth\Projects\2013\41\1747.00 MTA-5 Bridge Repairs Phase I

IDENTIFICATION NUMBER	SIZE OF SIGN WIDTH	SIZE OF SIGN HEIGHT	TEXT	TEXT DIMENSIONS (INCHES) LETTER HEIGHT	VERTICAL SPACING	ARROW RTE. MKR.	NUMBER OF SIGNS REQUIRED BALD HILL	ROYAL RIVER	TOTAL	COLOR BACK-GROUND	LEGEND BORDER	AREA IN SQUARE FEET BALD HILL	ROYAL RIVER	TOTAL
G20-2	36"	18"	END ROAD WORK	TEXT DIMENSIONS SHALL CONFORM TO "STANDARD HIGHWAY SIGNS" - 2009			2			ORANGE	BLACK	4.50 (9)		4.50 (9)
	48"	24"					4	2	6			8.00 (32)	8.00 (16)	8.00 (48)
G20-5aP	36"	24"	WORK ZONE				4	2	6	ORANGE	BLACK	6.00 (24)	6.00 (12)	6.00 (36)
R2-1 (50)	48"	60"	SPEED LIMIT 50				4	2	6	ORANGE	BLACK	20.00 (80)	20.00 (40)	20.00 (120)
R2-12	36"	54"	END WORK ZONE SPEED LIMIT				4	2	6	ORANGE	BLACK	13.5 (54)	13.5 (27)	13.5 (81)
R2-6aP	36"	24"	FINES DOUBLE				4	2	6	ORANGE	BLACK	6.00 (24)	6.00 (12)	6.00 (36)
W24-1L	48"	48"					4	2	6	ORANGE	BLACK	16.00 (64)	16.00 (32)	16.00 (96)
W24-1R							4	2	6			16.00 (64)	16.00 (32)	16.00 (96)
W3-5	48"	48"	SPEED LIMIT 50				4	2	6	ORANGE	BLACK	16.00 (64)	16.00 (32)	16.00 (96)
W4-2L	48"	48"					4	2	6	ORANGE	BLACK	16.00 (64)	16.00 (32)	16.00 (96)
W4-2R							4	2	6			16.00 (64)	16.00 (32)	16.00 (96)
W5-4	48"	48"	LANE NARROWS				4	2	6	ORANGE	BLACK	16.00 (64)	16.00 (32)	16.00 (96)
LOGO S	36"	36"	MAINE TURNPIKE	SEE DETAILS BELOW			8			SEE DETAILS BELOW		7.07 (57)		7.07 (57)

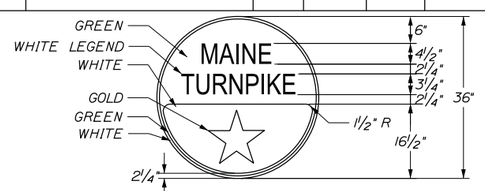

MAINE TURNPIKE SHIELD (MTA)

NOT TO SCALE

IDENTIFICATION NUMBER	SIZE OF SIGN WIDTH	SIZE OF SIGN HEIGHT	TEXT	TEXT DIMENSIONS (INCHES) LETTER HEIGHT	VERTICAL SPACING	ARROW RTE. MKR.	NUMBER OF SIGNS REQUIRED BALD HILL	ROYAL RIVER	TOTAL	COLOR BACK-GROUND	LEGEND BORDER	AREA IN SQUARE FEET BALD HILL	ROYAL RIVER	TOTAL
W13-1P (30)	24"	24"	30 MPH	TEXT DIMENSIONS SHALL CONFORM TO "STANDARD HIGHWAY SIGNS" - 2009			2			ORANGE	BLACK	4.00 (8)		4.00 (8)
W20-1	36"	36"	ROAD WORK AHEAD				2			ORANGE	BLACK	9.00 (18)		9.00 (18)
W20-1	48"	48"	ROAD WORK 1 MILE				4	2	6	ORANGE	BLACK	16.00 (64)	16.00 (32)	16.00 (96)
W20-4	36"	36"	ONE LANE ROAD AHEAD				2			ORANGE	BLACK	9.00 (18)		9.00 (18)
W20-5L (1/2 MILE)	48"	48"	LEFT LANE CLOSED 1/2 MILE				4	2	6	ORANGE	BLACK	16.00 (64)	16.00 (32)	16.00 (96)
W20-5R (1/2 MILE)	48"	48"					4	2	6			16.00 (64)	16.00 (32)	16.00 (96)
W20-7	36"	36"					2			ORANGE	BLACK	9.00 (18)		9.00 (18)
CS-45	96"	48"	WIDE LOADS OVER 10 FEET PROHIBITED	8C 8C 8C	6" 6" 6" 6"		8			ORANGE	BLACK	32.00 (256)		32.00 (256)
CS-46	96"	48"	WIDE LOADS OVER 10 FEET MUST EXIT	8C 8C 8C	6" 6" 6" 6"		2			ORANGE	BLACK	32.00 (64)		32.00 (64)
CS-47	96"	18"	NORTHBOUND SOUTHBOUND AT EXIT 63 AT EXIT 75	8C	5" 5" 5" 5"		6 2 1 1			ORANGE	BLACK	12.00 (72) 12.00 (24) 12.00 (12) 12.00 (12)		12.00 (72) 12.00 (24) 12.00 (12) 12.00 (12)
CS-48	60"	36"	WIDE LOADS →	8D		9" X 36" @ 0"	2			ORANGE	BLACK	15.00 (30)		15.00 (30)
MI-1	36"	36"	INTERSTATE 95	TEXT DIMENSIONS SHALL CONFORM TO "STANDARD HIGHWAY SIGNS" - 2004 EDITION & 2012 SUPPLEMENT			8					9.00 (72)		9.00 (72)

Scale: NOT TO SCALE

No.	Revision	By	Date

Designed by: T·Y·LIN INTERNATIONAL

CONSULTANT PROJECT MANAGER: Norman L. Baker

	By	Date		By	Date
Designed	ARG	09/2014	Checked	JRH	10/2014
Drawn	PJB	03/2015	In Charge of	NLB	03/2015

T.Y. Lin International
12 Northbrook Drive
Building A, Suite One
Falmouth, Maine 04105
TEL: (207) 781-4721
FAX: (207) 781-4753

MAINE TURNPIKE

THE GOLD STAR MEMORIAL HIGHWAY

MTA PROJECT MANAGER: Ralph Norwood

BALD HILL & ROYAL RIVER BRIDGE REPAIRS
(MILE 71.6) (MILE 71.1)
MAINTENANCE OF TRAFFIC
SIGN SUMMARY

SHEET NUMBER: MT-05

CONTRACT: 2015.02

Filename: ...\msta\045_MOT_Sign_Summary.dgn Division: Bridge Username: Date:3/20/2015
I:\Falmouth\Projects\2013\41747.00 - MTA-5 Bridge Repairs Phase I

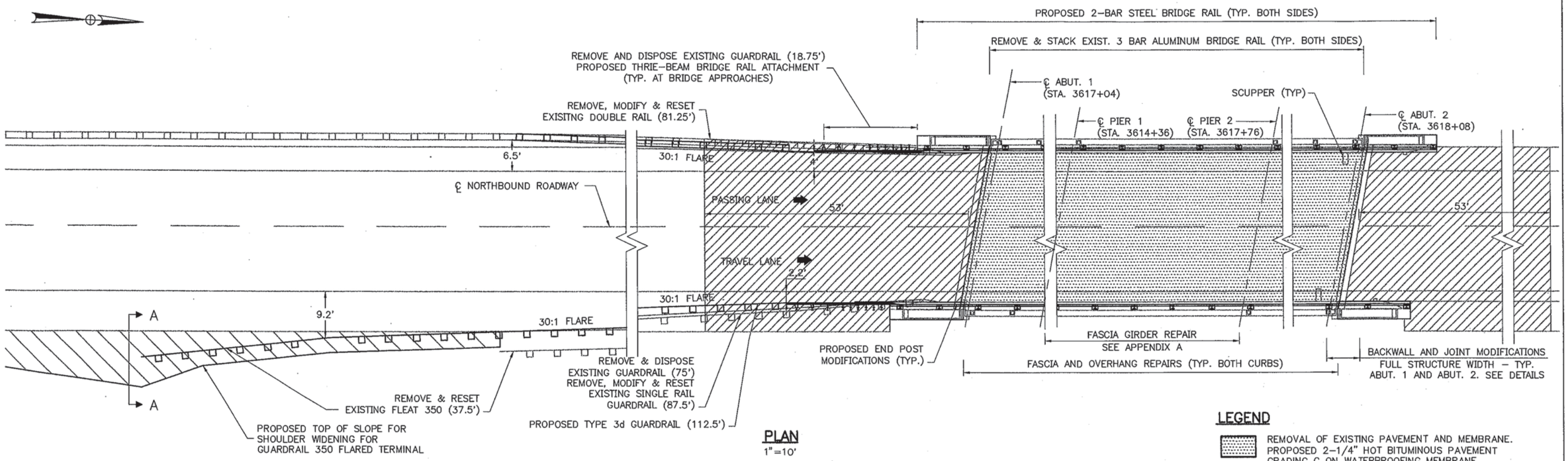

PLAN
1"=10'

LEGEND

REMOVAL OF EXISTING PAVEMENT AND MEMBRANE. PROPOSED 2-1/4" HOT BITUMINOUS PAVEMENT GRADING C ON WATERPROOFING MEMBRANE

REMOVAL OF EXISTING PAVEMENT SURFACE. PROPOSED 2" HOT BITUMINOUS PAVEMENT GRADING C.

FOR SECTION A-A, SEE
SHEET SP-2

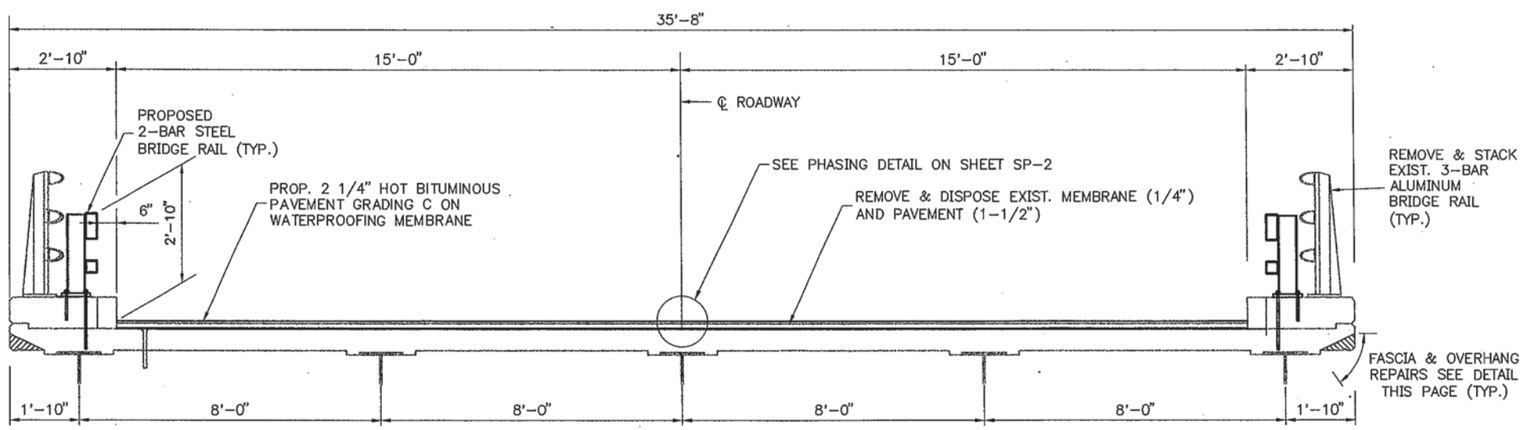

SECTION
(BOTH BRIDGES SIMILAR)
1/2" = 1'-0"

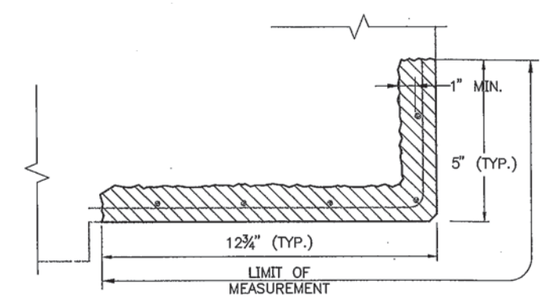

FASCIA & OVERHANG REPAIR DETAIL
N.T.S.

AS-BUILT

SHEET NUMBER: AB-01
46 OF 57

Scale:

No.	Revision	By	Date

Designed by:

HNTB
ARCHITECTS ENGINEERS PLANNERS

	By	Date		By	Date
Designed	CAH	3/04	Checked	CAH	3/04
Drawn	LZD	3/04	In Charge of	RAL	3/04

HNTB CORPORATION
2 Thomas Drive
Westbrook, ME 04092
TEL (207) 774-5155
FAX (207) 772-7410

MAINE TURNPIKE

THE GOLD STAR MEMORIAL HIGHWAY

2004 BRIDGE REPAIRS
MM 71.6
GENERAL SITE PLAN
NORTHBOUND ROADWAY

SHEET NUMBER: SP-1
CONTRACT: 2004.05
3 OF 16

H:\H09009XM\959\022\MILE 71.6.DWG 03/31/04 12:34

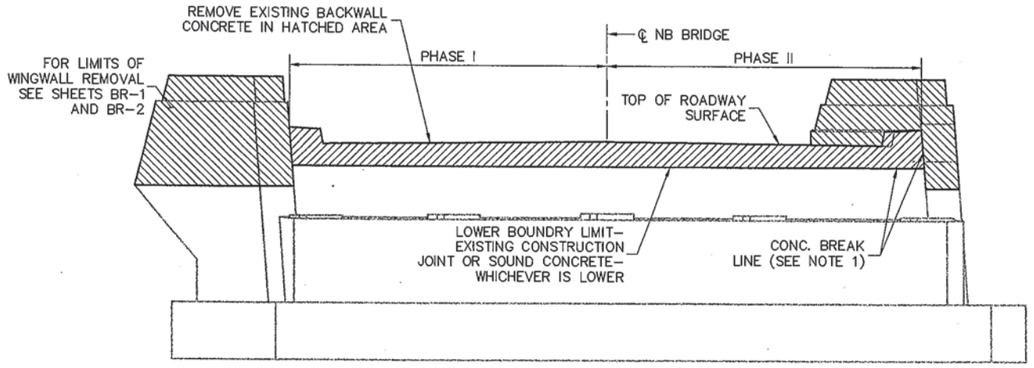

EXISTING ELEVATION

NORTHBOUND BRIDGE – SOUTH ABUTMENT SHOWN
(OTHER ABUTMENTS SIMILAR)
1/4" = 1'-0"

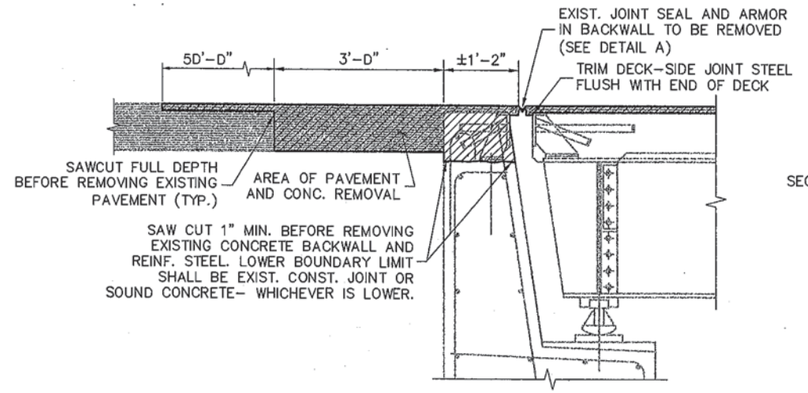

EXISTING SECTION – SOUTH ABUTMENT

3/4" = 1'-0"

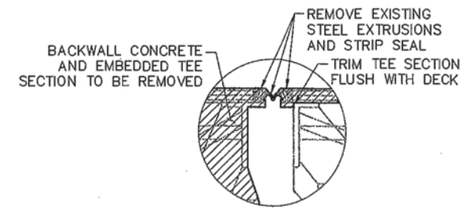

DETAIL A

1 1/2" = 1'-0"

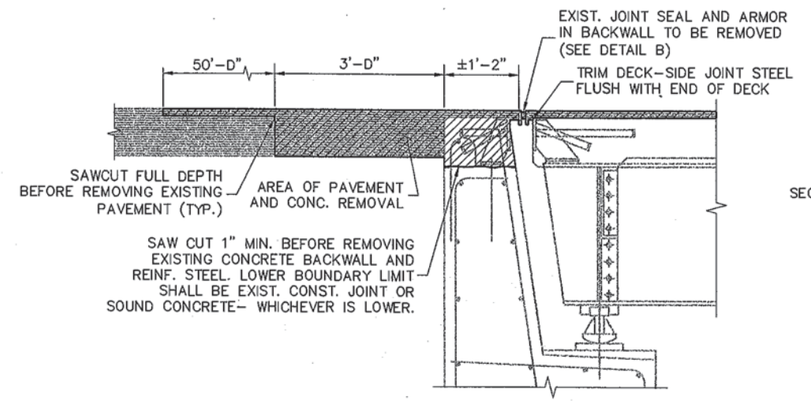

EXISTING SECTION – NORTH ABUTMENT

3/4" = 1'-0"

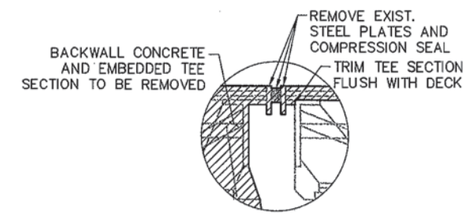

DETAIL B

1 1/2" = 1'-0"

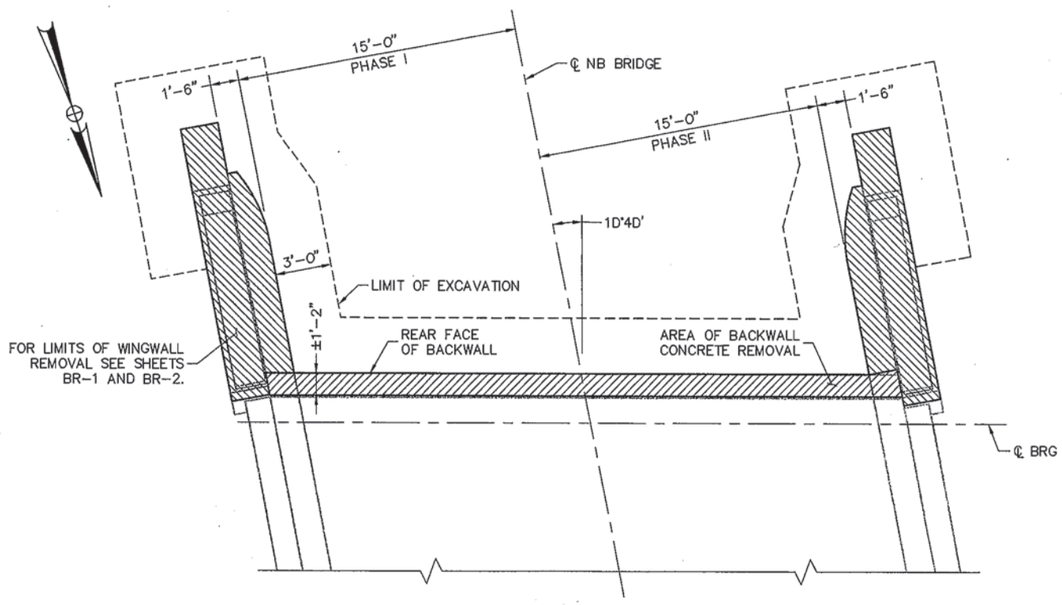

EXISTING PLAN

NORTHBOUND BRIDGE – SOUTH ABUTMENT SHOWN
(OTHER ABUTMENTS SIMILAR)
1/4" = 1'-0"

AS-BUILT

SHEET NUMBER: AB-02
47 OF 57

NOTES:

1. DELINEATE ALL AREAS OF CONCRETE DEMOLITION WITH A 1" DEEP SAW CUT PRIOR TO CONCRETE REMOVAL.
2. ALL STEEL SURFACES TO BE EMBEDDED INTO CONCRETE SHALL BE COATED WITH SIKA ARMATEC 110 EPOXY BONDING AGENT.
3. FOR PROPOSED WINGWALL MODIFICATIONS, SEE SHEETS BR-1 AND BR-2.
4. THREADED COUPLINGS SHALL BE EPOXY COATED. FABRICATION AND INSTALLATION SHALL BE PAID UNDER ITEMS 503.14 & 5D3.15.
5. PAYMENT FOR REMOVAL OF THE EMBEDDED TEE SECTION IN BACKWALL, EXISTING STRIP AND COMPRESSION SEALS, AND TRIMMING THE EXISTING DECK-SIDE TEE FLUSH WITH THE EDGE OF DECK SHALL BE MADE UNDER ITEM 502.221 – EXPANSION JOINT MODIFICATIONS.

Scale:

No.	Revision	By	Date

Designed by:

HNTB
ARCHITECTS ENGINEERS PLANNERS

	By	Date		By	Date
Designed	TRC	3/04	Checked	CAH	3/04
Drawn	TRC	3/04	In Charge of	RAL	3/04

HNTB CORPORATION
2 Thomas Drive
Westbrook, ME 04092
TEL (207) 774-5155
FAX (207) 772-7410

MAINE TURNPIKE

THE GOLD STAR MEMORIAL HIGHWAY

2004 BRIDGE REPAIRS
MILE 71.6
JOINT REPAIR DETAILS
EXISTING JOINT REMOVAL

SHEET NUMBER: JR-1

CONTRACT: 2004.05

H:\H09009XW\959\022\JOINT REPAIR01.DWG 03/31/04 10:32

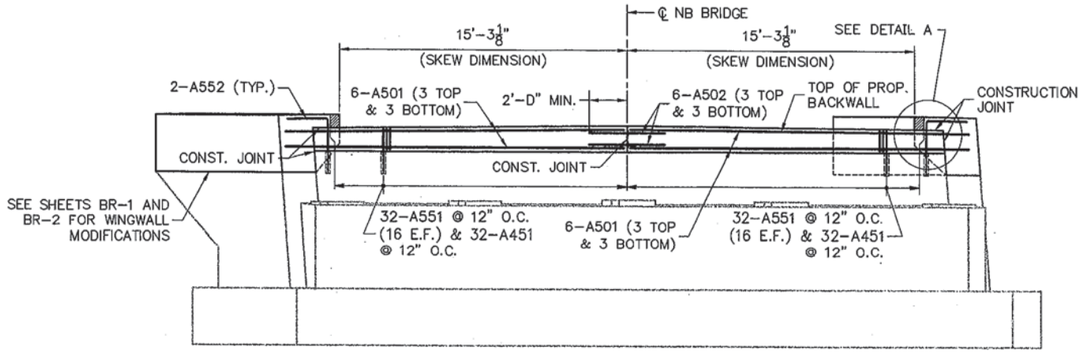

PROPOSED ELEVATION

NORTHBOUND BRIDGE – SOUTH ABUTMENT
(NORTH ABUTMENT SIMILAR)
1/8" = 1'-D"

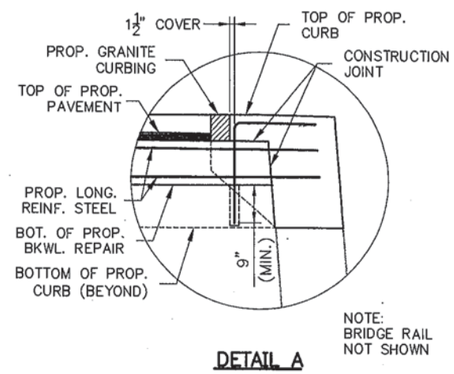

DETAIL A

1/2"=1'-0"

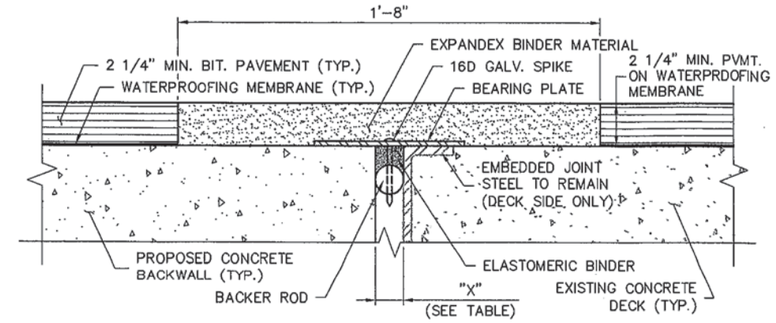

DETAIL B

SCALE 3" = 1'-0"

REBAR SCHEDULE

MARK	SIZE	NO.	LENGTH	TYPE	DIMENSIONS A	DIMENSIONS B	DIMENSIONS C	LOCATION AND REMARKS
A451	4	256	2'-3"	1D1	6"	9"	–	STIRRUPS
A501	5	48	18'-0"	STR	–	–	–	LONGITUDINAL
A502	5	24	4'-D"	113	2'-D"	2'-0"	–	SPLICE BARS
A551*	5	256	2'-6"	118	1'-9"	9"	–	DOWEL BARS
A552*	5	8	5'-8"	118	3'-6"	2'-2"	–	DOWEL BARS

* FIELD CUT FOR 2" COVER AND 9" MINIMUM EMBEDMENT. FIELD TREAT CUT ENDS WITH EPOXY REPAIR MATERIAL KIT. ADVISE ENGINEER IF EMBEDMENT CONCRETE IS NOT SOLID.

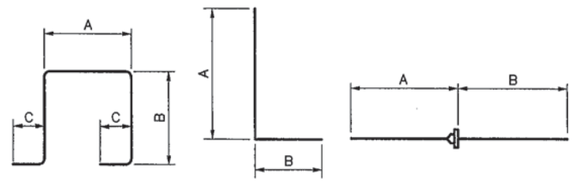

TYPE 101 TYPE 118 TYPE 113

ASPHALTIC PLUG JOINT NOTES:

1. DECK AND BACKWALL REINFORCING NOT SHOWN FOR CLARITY.
2. CENTERING NAILS SHALL BE SPACED AT 12" O.C. MAXIMUM AND PLACED 2" FROM JOINTS IN THE BEARING PLATE.
3. THE BEARING PLATE SHALL BE GALVANIZED STEEL 1/4" THICK AND 8" WIDE.
4. TOP OF EXISTING JOINT ARMOR SHALL BE SANDBLASTED TO WHITE METAL IMMEDIATELY BEFORE JOINT INSTALLATION.
5. ASPHALTIC PLUG JOINT SHALL BE WATSON BOWMAN ACME "WABO EXPANDEX" ASPHALTIC PLUG JOINT SYSTEM AND INSTALLED PER MANUFACTURERS SPECIFICATIONS. EQUIVALENT JOINT SYSTEMS MAY BE USED WITH APPROVAL OF THE ENGINEER.
6. ASPHALTIC PLUG JOINT SHALL BE INSTALLED AT THE END OF EACH PHASE OF CONSTRUCTION PRIOR TO TRAFFIC BEING PERMITTED TO TRAVEL ON THE REHABILITATED SECTION OF BRIDGE DECK.

JOINT INSTALLATION TABLE – NB AND SB BRIDGES								
NORTH ABUTMENT								
TEMP. (°F)	20°	30°	40°	45°	50°	60°	70°	80°
"X" INCHES	1 9/16	1 9/16	1 1/2	1 1/2	1 1/2	1 7/16	1 7/16	1 7/16
SOUTH ABUTMENT								
TEMP. (°F)	20°	30°	40°	45°	50°	60°	70°	80°
"X" INCHES	1 5/8	1 9/16	1 1/2	1 1/2	1 1/2	1 7/16	1 3/8	1 5/16

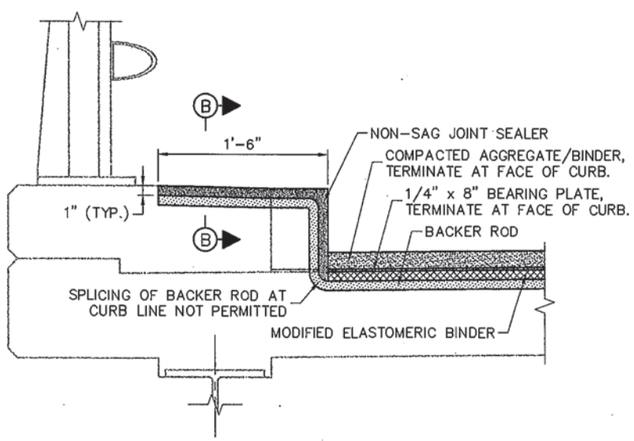

JOINT DETAIL AT CURB

1 1/2" = 1'-D"

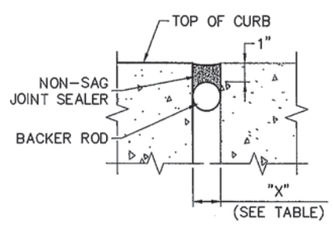

SECTION B–B

3" = 1'-D"

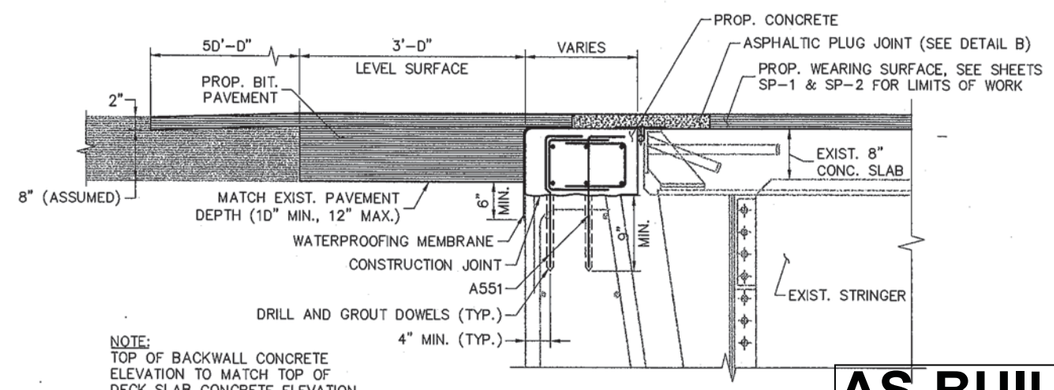

NOTE:
TOP OF BACKWALL CONCRETE ELEVATION TO MATCH TOP OF DECK SLAB CONCRETE ELEVATION.

PROPOSED SECTION

(TYPICAL ALL ABUTMENTS)
NTS

AS-BUILT

SHEET NUMBER: AB-03
48 OF 57

i:\109009xw\959\022\JOINT REPAIR01.DWG 03/31/04 10:32

Scale:

No.	Revision	By	Date

Designed by:

HNTB
ARCHITECTS ENGINEERS PLANNERS

	By	Date		By	Date
Designed	TRC	3/04	Checked	CAH	3/04
Drawn	TRC	3/04	In Charge of	RAL	3/04

HNTB CORPORATION
2 Thomas Drive
Westbrook, ME 04092
TEL (207) 774-5155
FAX (207) 772-7410

MAINE TURNPIKE

THE GOLD STAR MEMORIAL HIGHWAY

2004 BRIDGE REPAIRS
MILE 71.6
JOINT REPAIR DETAILS
PROPOSED MODIFICATIONS

SHEET NUMBER: JR-2

CONTRACT: 2004.05

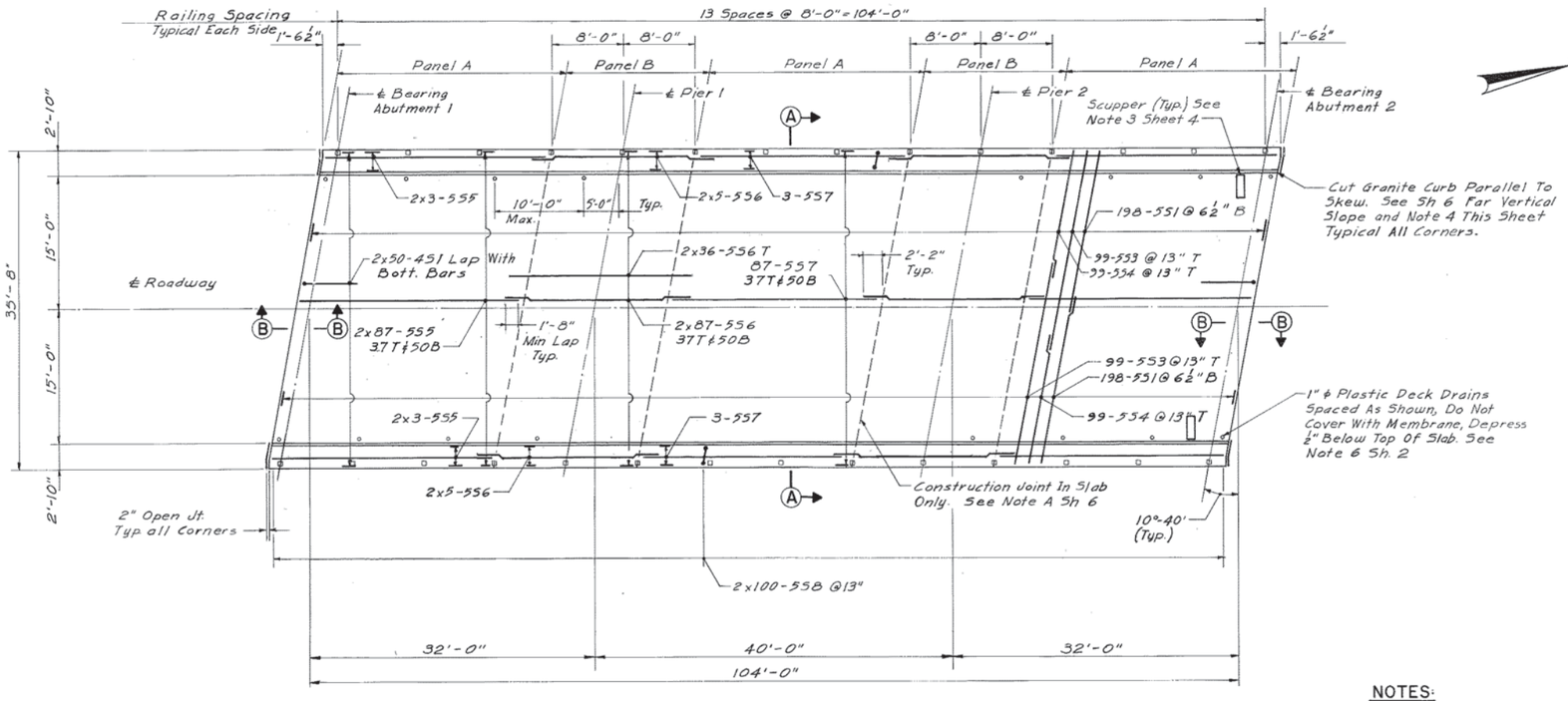

DECK PLAN

⅛" = 1'-0"

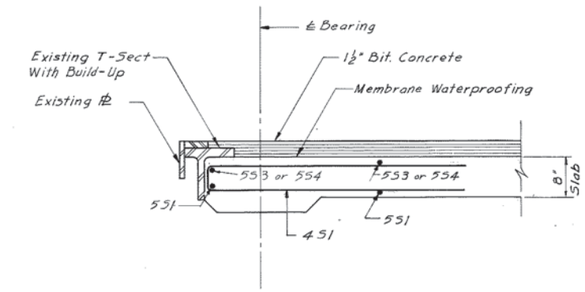

SECTION B-B

No Scale

NOTES:

1. For General Notes & Quantites, See Sheet 2
2. For 1" V-Groove Details, See Sheet 6
3. For Railing Details, See Sheet 7
4. Length of Last Section of Curb To Be Field Checked.
5. Place Longitudinal Steel As Shown In Section A-A

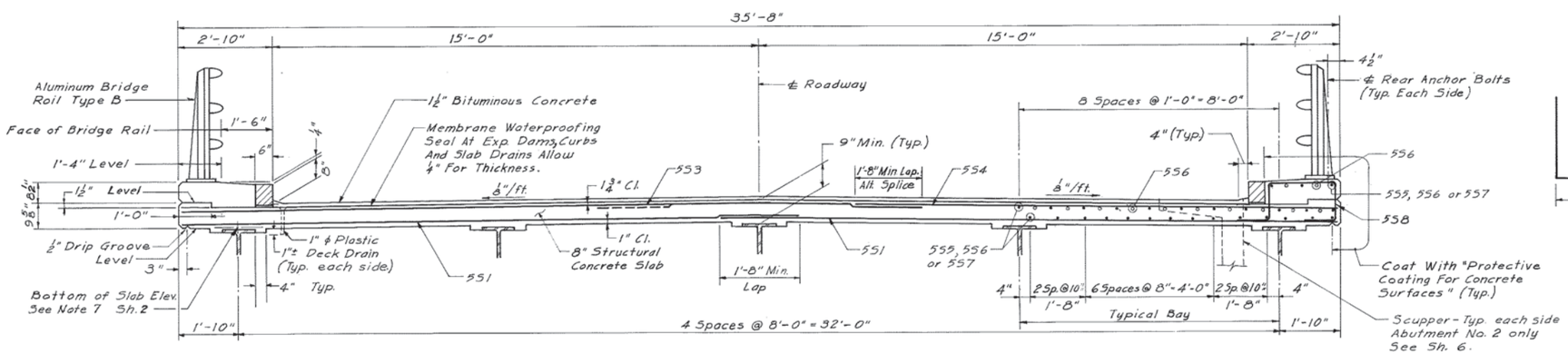

SECTION A-A

½" = 1'-0"

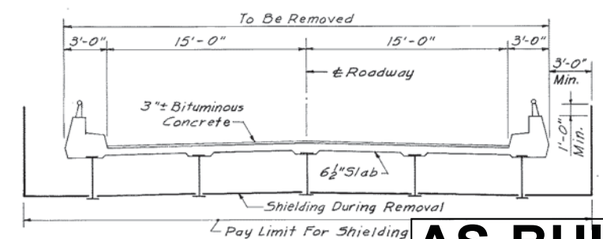

EXISTING DECK REMOVAL

No Scale

AS-BUILT

SHEET NUMBER: AB-04
49 OF 57

NO.	REVISION	BY	DATE		BY	DATE
				MADE	A.R.T.	12-84
				TRACED		
				CHECKED	R.E.M.	1-85
				IN CHARGE OF	J.P.W.	

MAINE TURNPIKE AUTHORITY
MAINE TURNPIKE

BALD HILL ROAD
DECK REPLACEMENT

HOWARD, NEEDLES, TAMMEN & BERGENDOFF
ARCHITECTS ENGINEERS PLANNERS
BOSTON

SCALE: AS NOTED

SHEET NO. 3 OF 21

Bald Hill Road

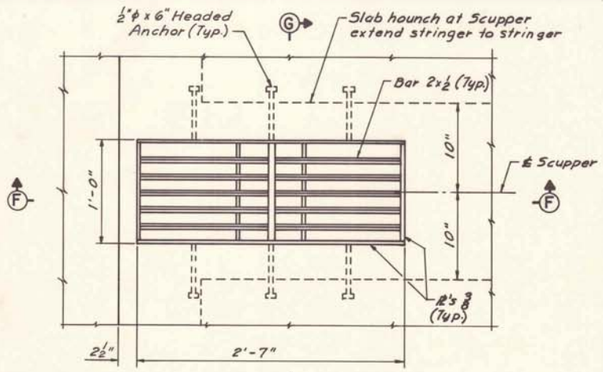

PLAN

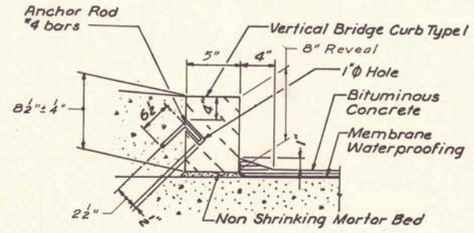

DETAIL A

No Scale

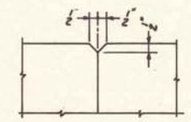

1" V-GROOVE

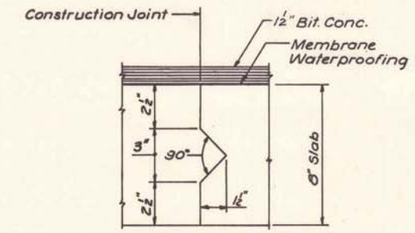

Reinforcement shall be continuous through the joint

CONSTRUCTION JOINT DETAIL

No Scale

NOTE:

For treatment of curb ends at abutments see individual bridge plans.

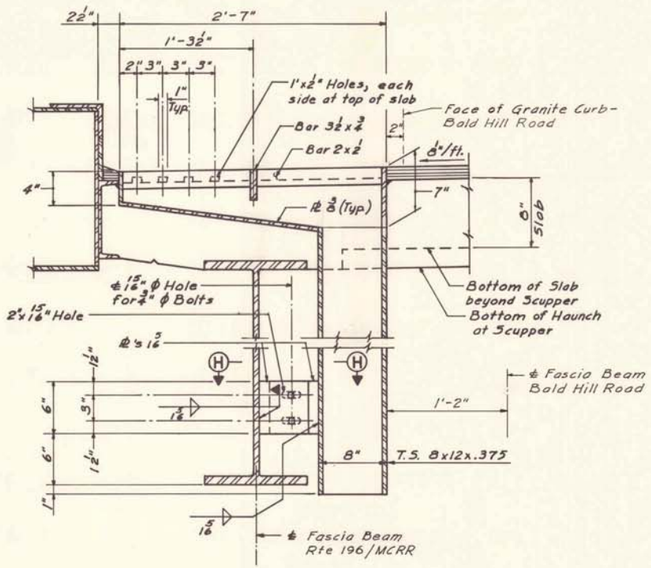

SECTION F-F

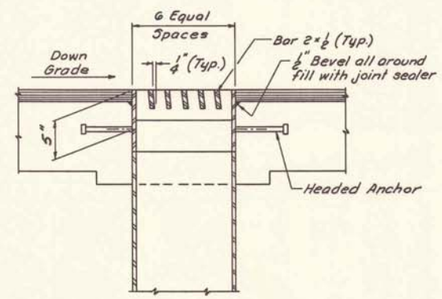

SECTION G-G

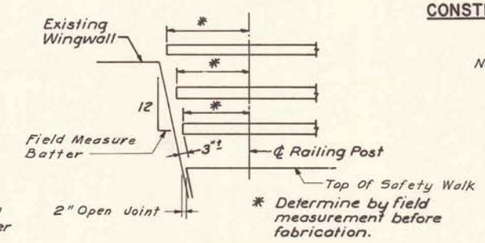

RAILING EXTENSION DETAIL

No Scale

NOTE A

As an alternate and at the Contractors option, the deck concrete may be placed in one continuous operation thus eliminating slab construction joints.
Continuous placing of concrete in the deck shall be made with the use of an acceptable set-retarder.

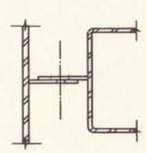

SECTION H-H

SCUPPER NOTES:

1. All welds to be continuous ¼ bead or fillet welds except as noted.
2. * Do not cover holes with membrane waterproofing.
3. Scuppers to be galvanized after fabrication. Galvanizing shall conform to A.S.T.M. A 153.
4. All plates shall conform to A.S.T.M. A 36.
5. Structural tubes to conform to A.S.T.M. A501.

SCUPPER DETAILS

No Scale

Shown for Rte 196 - Similar for Bald Hill Road except as noted.

NO.	REVISION	BY	DATE		BY	DATE
				MADE	A.R.T.	12-84
				TRACED		
				CHECKED	I.S.	1-85
				IN CHARGE OF	J.P.W.	

AS-BUILT

SHEET NUMBER: AB-05
50 OF 57

MAINE TURNPIKE AUTHORITY
MAINE TURNPIKE

SCUPPER AND MISCELLANEOUS DETAILS

HOWARD, NEEDLES, TAMMEN & BERGENDOFF
ARCHITECTS ENGINEERS PLANNERS
BOSTON

SCALE: NO SCALE

SHEET NO. 6 OF 21

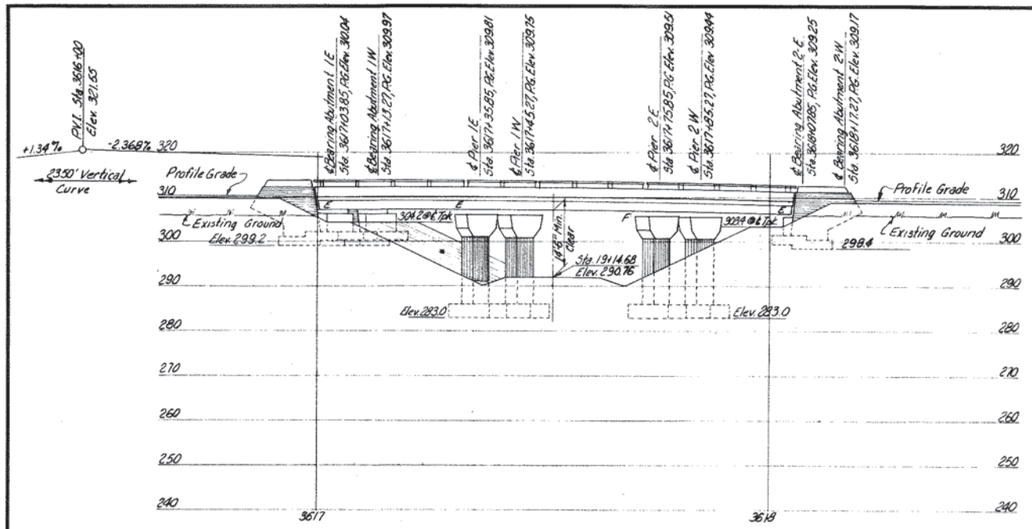

ELEVATION

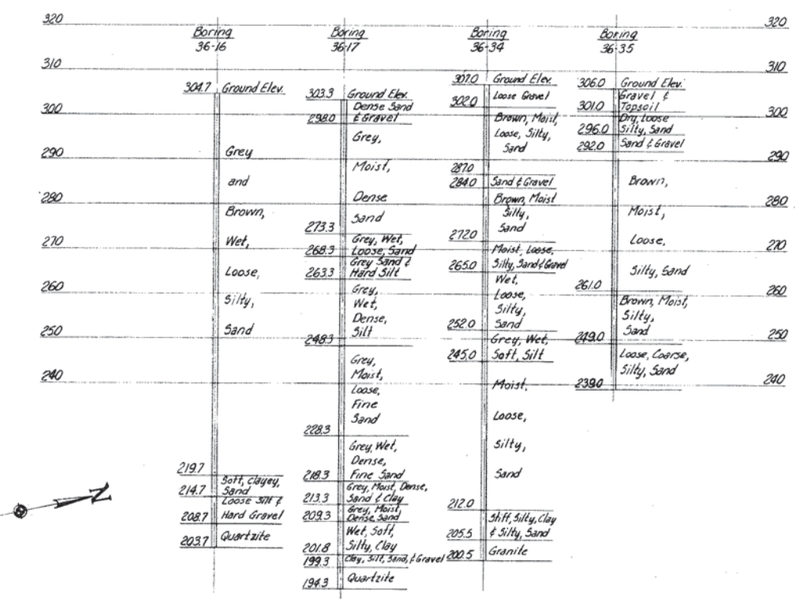

BORING DATA

GENERAL NOTES

Design Specifications: AASHO (1953) with minor modifications.
Design Live Loading: H20-S16
Maximum Base Pressures:
Abutments - 1.0 Tons/Sq. Ft.
Piers - 2.6 Tons/Sq. Ft.

REFERENCES

Dwg. No.	Title	Substructure Contractor	Superstructure: Steel Fabricator	Superstructure: Steel Erector	Superstructure: Floor Contractor
SD-1A	Standard Abutment Details	✓	✓	✓	✓
SD-2	Standard Pier Details	✓	✓	✓	
SD-3	Abutment Drainage Details	✓			
SD-5	Standard Handrail, Bearing Devices, and Miscellaneous Details	✓	✓	✓	✓
SD-6	Standard Diaphragm Details		✓	✓	✓
SD-11A	Type "X" and "Y" Expansion Joints	✓	✓	✓	✓
SD-17	Standard Bridge Floor Cross Sections 28'-0" and 30'-0" Roadways	✓	✓	✓	✓

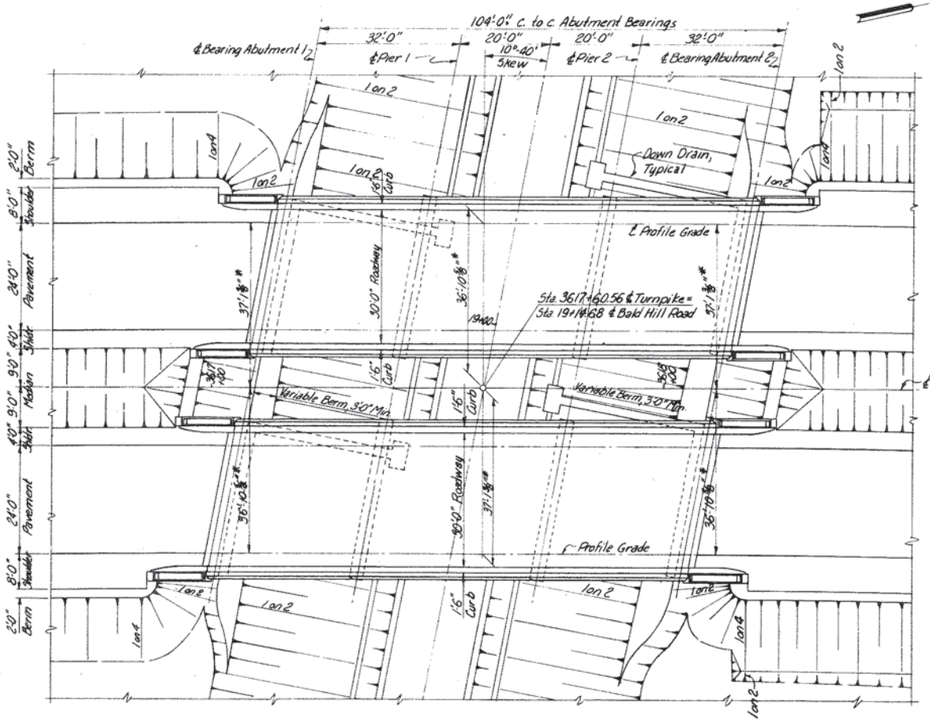

PLAN

TURNPIKE CURVE DATA
P.I. Sta. 362+74.55
Δ = 12°33'35" Rt.
D = 1°00'
R = 5729.58
T = 630.51
L = 1255.96
E = 34.59

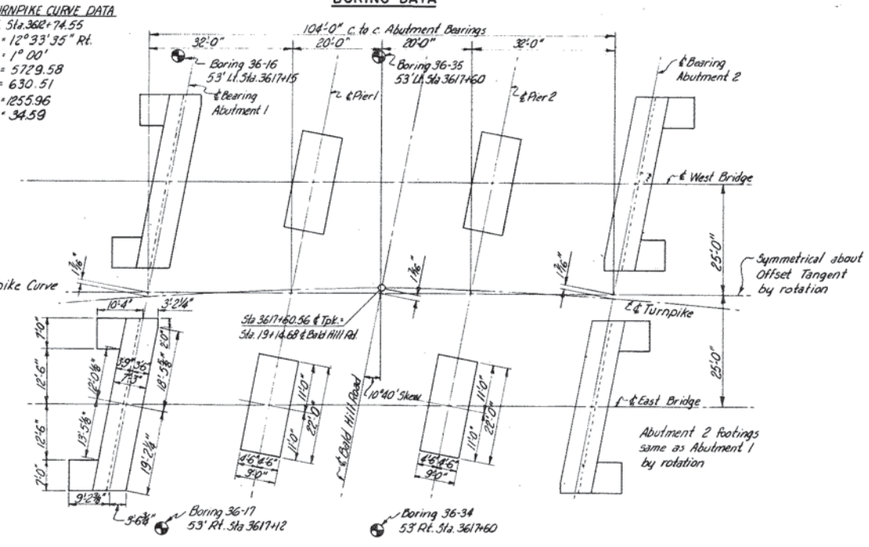

FOOTING PLAN

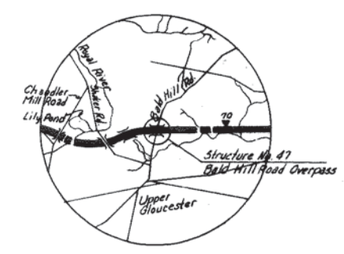

VICINITY MAP
Scale: 1" = 1 Mile

* These dimensions locate Profile Grade over the Structure.
Construct abutment wingwalls and superstructure curbs & parapet walls straight and parallel to the offset tangent shown on the footing plan.

DRAWING 47.01.03

	BY	DATE
MADE	H.J.G.	4-12-54
TRACED		
CHECKED	R.S.G.	4-13-54
IN CHARGE OF	I.D.S.K.	

No.	REVISION	BY	DATE
2	As Built	HBH	1-18-56
1	Borings 36-16 & 36-17 Switched	DHL	5-4-54

AS-BUILT

SHEET NUMBER: AB-06
51 OF 57

MAINE TURNPIKE AUTHORITY
MAINE TURNPIKE
SECTION 2 — PORTLAND TO AUGUSTA
STRUCTURE NO. 47 TURNPIKE OVER
BALD HILL ROAD
STA. 3617+60.56
GENERAL PLAN AND ELEVATION

HOWARD, NEEDLES, TAMMEN & BERGENDOFF
CONSULTING ENGINEERS
NEW YORK KANSAS CITY

SCALE: 1/16" = 1'-0"
CONTRACT NO.
SHEET NO. 204 OF 382

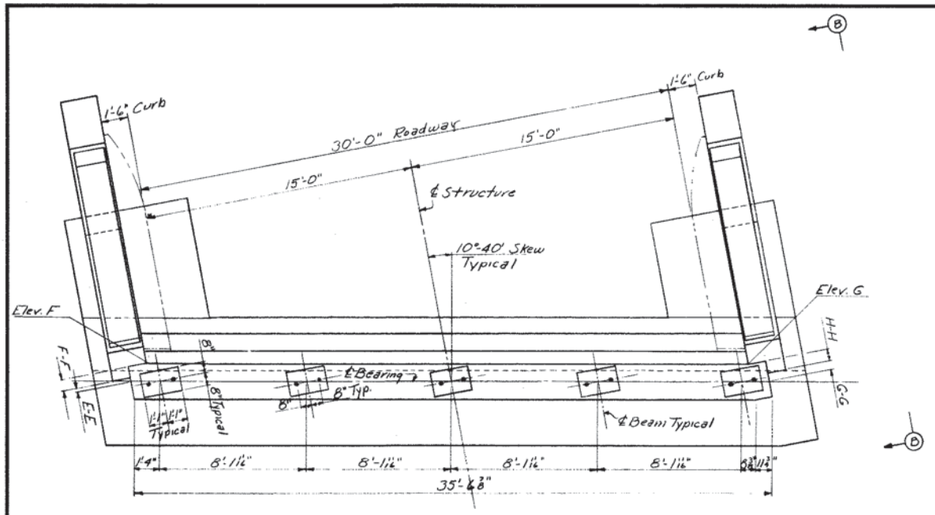

PLAN

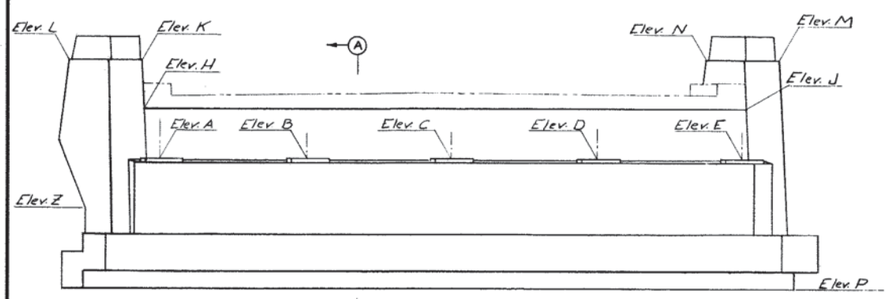

ELEVATION

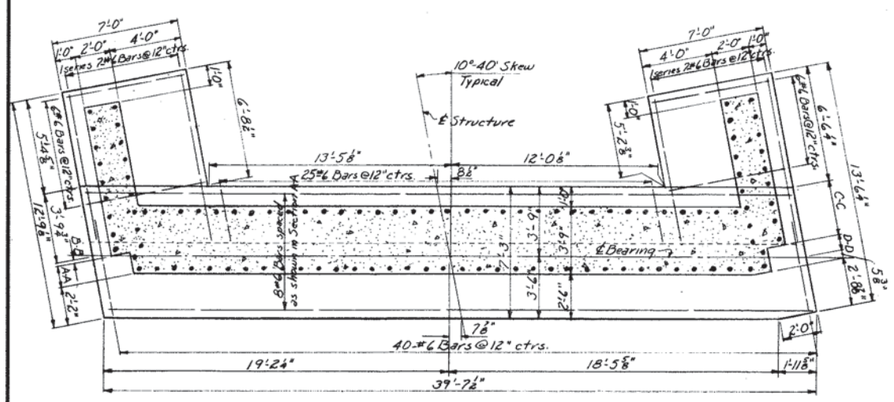

FOOTING PLAN

ABUTMENTS

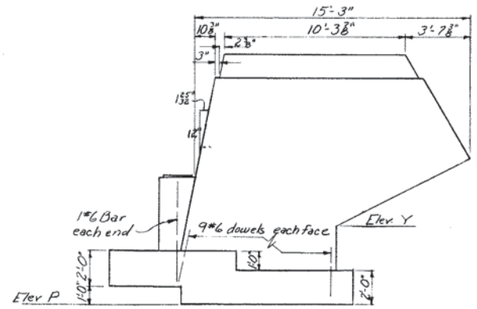

ELEVATION B-B

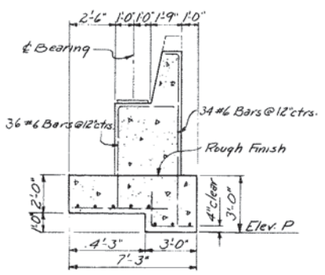

SECTION A-A

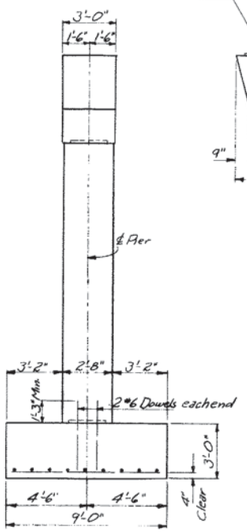

ELEVATION C-C

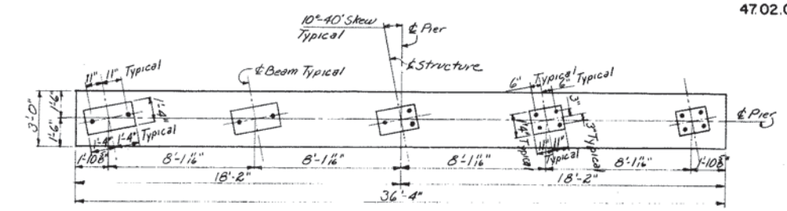

HALF CAP PLAN PIER 1 HALF CAP PLAN PIER 2

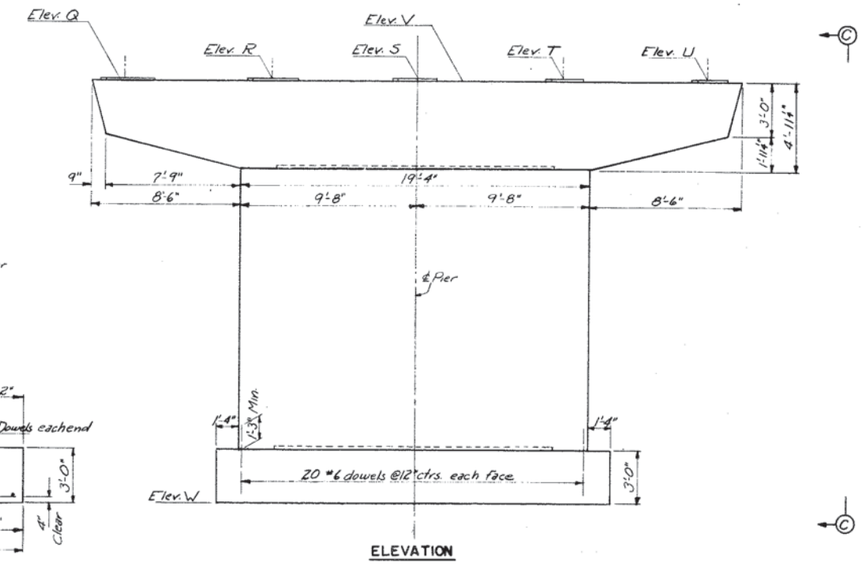

ELEVATION

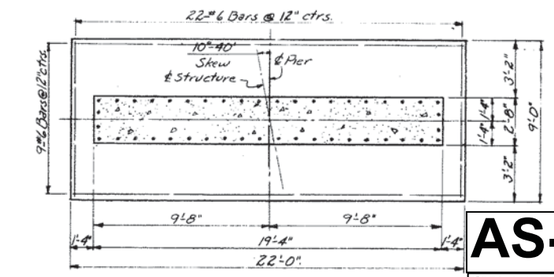

FOOTING PLAN

PIERS

ABUTMENT ELEVATIONS				
	Abut 1E	Abut 2E	Abut 1W	Abut 2W
A	306.43	305.60	306.37	305.52
B	306.48	305.66	306.41	305.58
C	306.55	305.76	306.48	305.68
D	306.46	305.69	306.39	305.61
E	306.39	305.65	306.33	305.57
F	306.35	305.51	306.29	305.43
G	306.31	305.51	306.24	305.49
H	309.29	308.43	309.23	308.35
J	309.25	308.48	309.18	308.40
K	312.21	311.34	312.15	311.26
L	312.27	311.24	312.22	311.16
M	312.17	311.40	312.10	311.32
N	312.25	311.30	312.18	311.21
P	299.2	298.4	299.2	298.4
Y	304.00	303.05	303.93	302.96
Z	304.02	302.99	303.97	302.91

PIER ELEVATIONS				
	Pier 1E	Pier 2E	Pier 1W	Pier 2W
Q	306.01	305.88	305.94	305.80
R	306.05	305.92	305.99	305.84
S	306.13	305.99	306.06	305.91
T	306.03	305.89	305.96	305.82
U	305.97	305.83	305.90	305.75
V	305.96	305.81	305.88	305.73
W	283.0	283.0	283.0	283.0

ABUTMENT DIMENSIONS				
	Abut 1E	Abut 2E	Abut 1W	Abut 2W
A-A	1'-2⅞"	1'-2⅞"	1'-3"	1'-3⅞"
B-B	1⅞"	1⅞"	1¾"	1⅞"
C-C	2'-10⅞"	2'-10⅞"	2'-9⅞"	2'-10"
D-D	11⅞"	11⅞"	11⅞"	11¾"
E-E	2⅞"	2⅞"	2¾"	2⅞"
F-F	7⅞"	7⅞"	7¾"	7⅞"
G-G	7⅞"	7⅞"	7⅞"	7¾"
H-H	7⅞"	7⅞"	7⅞"	7¾"

Note:
East and West Bridges are identical except for elevations and dimensions shown otherwise.

AS-BUILT

SHEET NUMBER: AB-07
52 OF 57

DRAWING NO. 47.02.03						
	BY	DATE				
MADE	R.S.G.	4-9-54				
TRACED						
CHECKED	H.J.G.	4-13-54	1	As Built	HBH	1-18-56
IN CHARGE OF	I.D.S.K.		No.	REVISION	BY	DATE

MAINE TURNPIKE AUTHORITY
MAINE TURNPIKE
SECTION 2 — PORTLAND TO AUGUSTA

STRUCTURE NO. 47 TURNPIKE OVER
BALD HILL ROAD
STA. 3617+60.56
ABUTMENTS AND PIERS

HOWARD, NEEDLES, TAMMEN & BERGENDOFF
CONSULTING ENGINEERS
NEW YORK KANSAS CITY

SCALE: 4"=1'-0"
CONTRACT NO.
SHEET NO. 205 OF 382

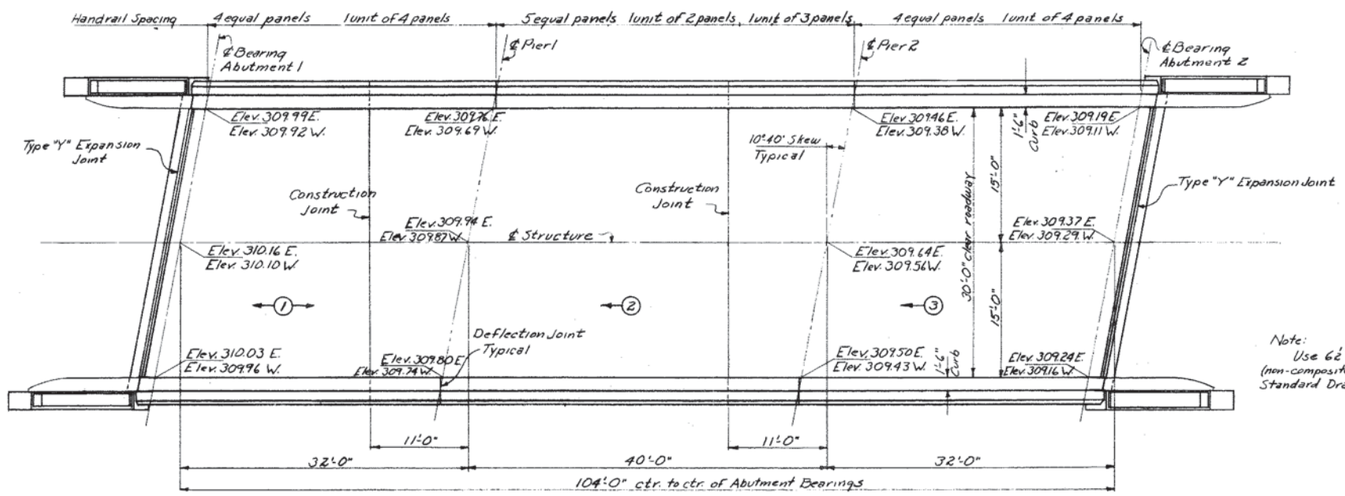

PLAN
Scale: 1/8" = 1'-0"

Note:
Use 6½" Bridge floor (non-composite) as shown on Standard Drawing No. 17.

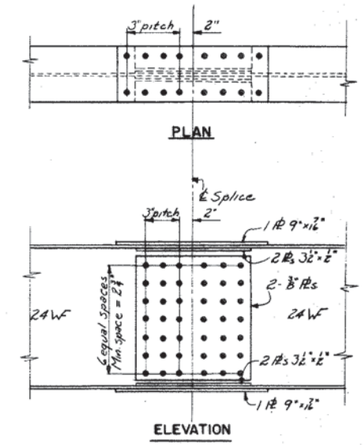

TYPICAL BEAM SPLICE
Scale: 1" = 1'-0"

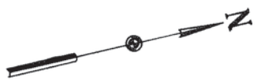

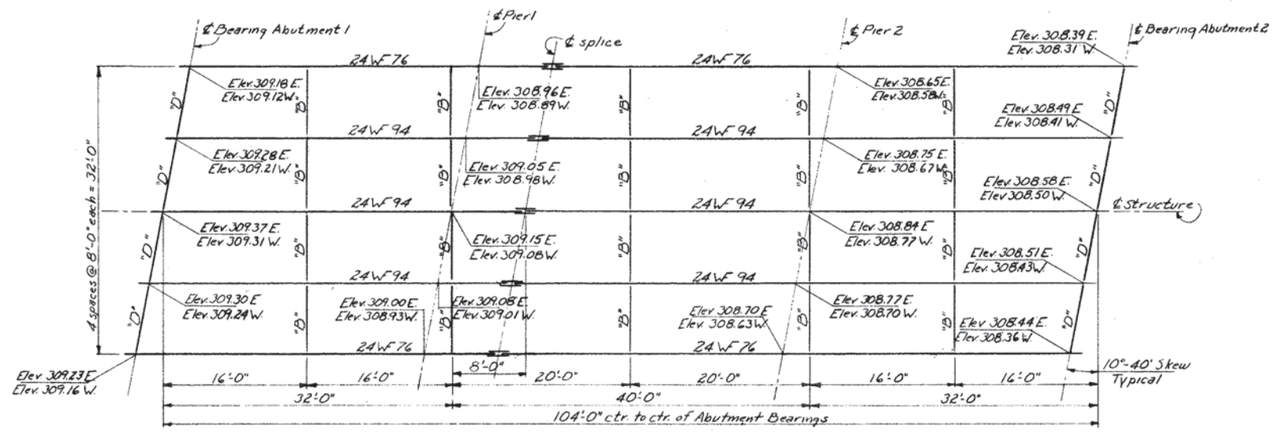

FRAMING PLAN
Scale: 1/8" = 1'-0"

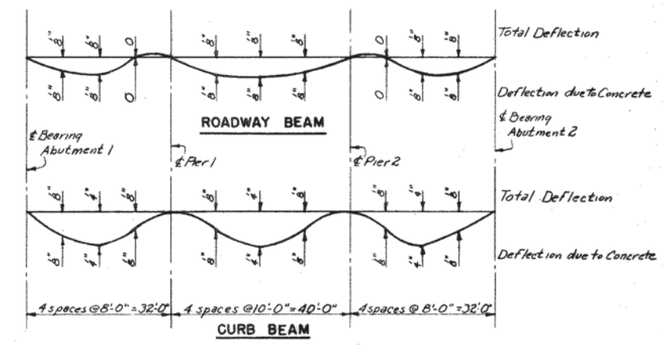

DEAD LOAD DEFLECTION DIAGRAMS
No Scale

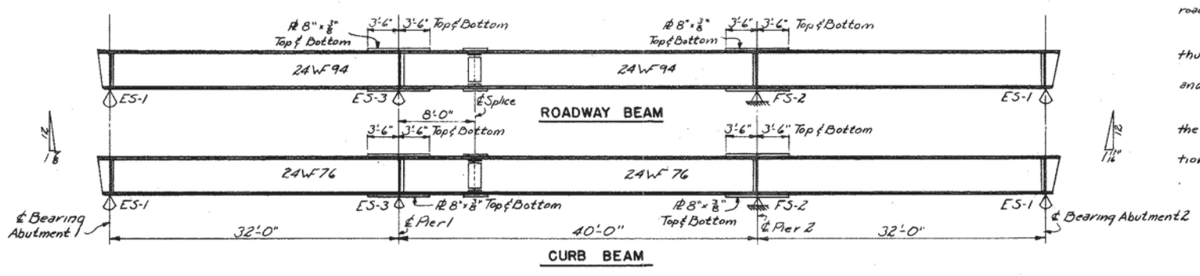

CURB BEAM

BEAM ELEVATIONS
No Scale

Notes:
Elevations shown on floor plan are to top of finished roadway.
Elevations shown on framing plan are to top of beam flanges.
Sequence and direction of placing concrete are noted thus: ←Ⓝ
Marks "B" and "D" on framing plan refer to interior and end diaphragms shown on Standard Drawing No. 6.
All bearing stiffeners are 7x4x⅜ angles.
Bevels shown at ends of beams are with respect to the beam axis.
East and West Bridges are identical except for elevations.

AS-BUILT

SHEET NUMBER: AB-08
53 OF 57

DRAWING NO. 47.03.03

	BY	DATE				
MADE	R.S.G.	4-2-54				
TRACED						
CHECKED	H.J.G.	4-13-54	1	As Built	HBH	1-18-56
IN CHARGE OF	I.D.S.K.		No.	REVISION	BY	DATE

MAINE TURNPIKE AUTHORITY
MAINE TURNPIKE
SECTION 2 — PORTLAND TO AUGUSTA

STRUCTURE NO. 47 — TURNPIKE OVER
BALD HILL ROAD
STA. 3617+60.56
SUPERSTRUCTURE

HOWARD, NEEDLES, TAMMEN & BERGENDOFF
CONSULTING ENGINEERS
NEW YORK — KANSAS CITY

SCALE: As Shown
CONTRACT NO.
SHEET NO. 206 OF 382

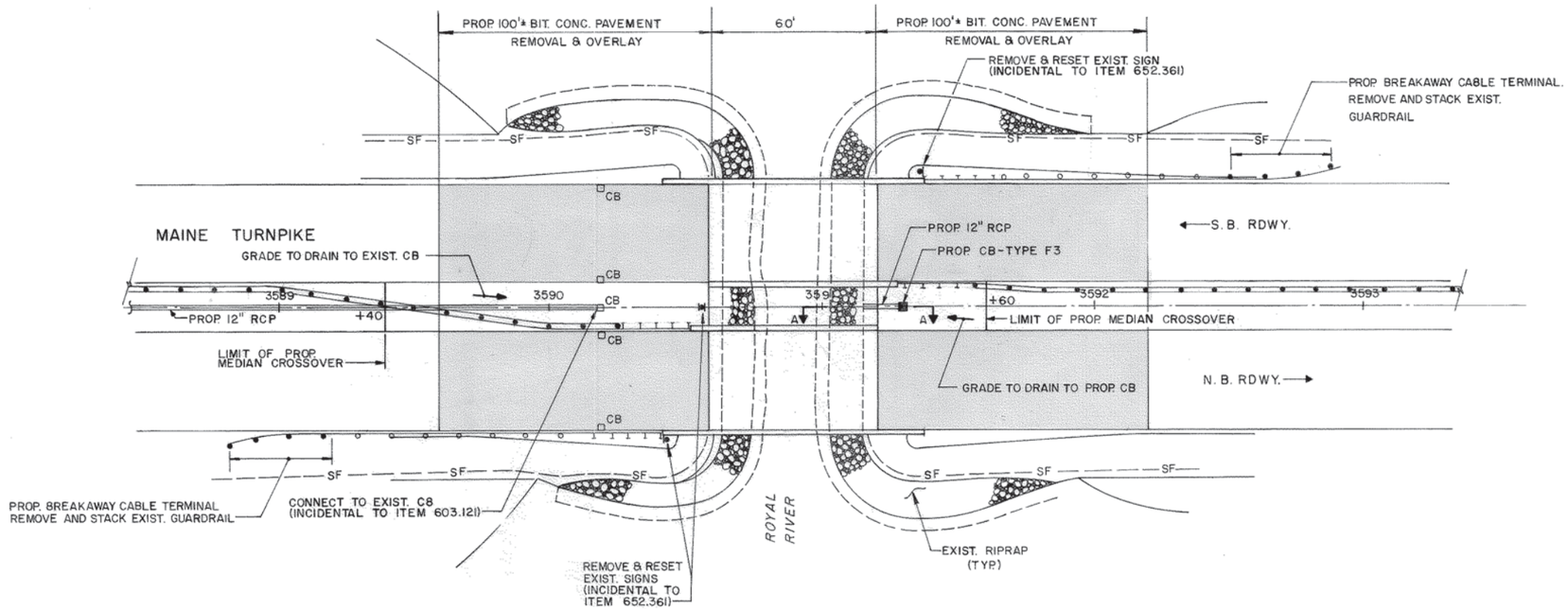

PLAN
1"=25'

ITEM 606.174 GUARDRAIL ATTACHMENT - TYPE A	EA.
STA. 3591+27± TO STA. 3591+52± 9' LT.	1
STA. 3591+38± TO STA. 3591+63± 45' LT.	1
STA. 3590+27± TO STA. 3590+52± 9' RT.	1
STA. 3590+17± TO STA. 3590+42± 45' RT.	1

ITEM 606.35 GUARDRAIL DELINEATOR POST	EA.
STA. 3589+07± 47' RT.	1
STA. 3592+63± 47' LT.	1

ITEM 608.371 GUARDRAIL REMOVE AND STACK, SINGLE FACE	L.F.
STA. 3588+82± 50' RT. TO STA. 3589+07± 46' RT.	25'
STA. 3590+17± TO STA. 3590+42± 46' RT.	25'
STA. 3591+38± TO STA. 3591+63± 46' LT.	25'
STA. 3592+63± 48' LT. TO STA. 3592+88± 50' LT.	25'

ITEM 606.372 GUARDRAIL REMOVE AND STACK, DOUBLE FACE	L.F.
STA. 3590+27± TO STA. 3590+52± 9' RT.	25'
STA. 3591+27± TO STA. 3591+52± 9' LT.	25'

ITEM 606.382 GUARDRAIL REMOVE AND RESET, DOUBLE FACE	L.F.
REMOVE	
STA. 3584+60± TO STA. 3590+60± 8' LT.	
STA. 3591+20± TO STA. 3596+40± 8' LT.	
RESET	
STA. 3584+60± 8' LT. TO STA. 3590+27± 9' RT.	570'±
STA. 3591+52± 9' LT. TO STA. 3596+40± 9' LT.	490'±

ITEM 606.77 BREAKAWAY CABLE TERMINAL	EA.
STA. 3588+82 50' RT. TO STA. 3589+07 46' RT.	1
STA. 3592+63 46' RT. TO STA. 3592+88 50' LT.	1

ITEM 656.63 30" TEMPORARY SILT FENCE	L.F.
STA. 3589+60± 60' LT. TO STA. 3590+60± 50' LT.	110'
STA. 3588+80± 65' RT. TO STA. 3590+60± 50' RT.	200'
STA. 3591+15± 50' LT. TO STA. 3592+90± 65' LT.	185'
STA. 3591+15± 50' RT. TO STA. 3592+20± 60' RT.	110'

ITEM 656.50 BALED HAY, IN PLACE	EA.
STA. 3589+60± 80' LT. TO STA. 3590+60± 50' LT.	45
STA. 3588+80± 65' RT. TO STA. 3590+80± 50' RT.	80
STA. 3591+15± 50' LT. TO STA. 3592+90± 65' LT.	75
STA. 3591+15± 50' RT. TO STA. 3592+20± 60' RT.	45

ITEM 603.121 12 INCH REINFORCED CONCRETE PIPE - CLASS III	L.F.
STA. 3584+00 TO STA. 3590+20 ℄	620
STA. 3591+17 TO STA. 3591+29 ℄	12

ITEM 604.242 CATCH BASIN - TYPE F3	EA.
STA. 3591+30 ℄	1

ITEM 604.244 CATCH BASIN - TYPE F4	EA.
STA. 3584+00 ℄	1

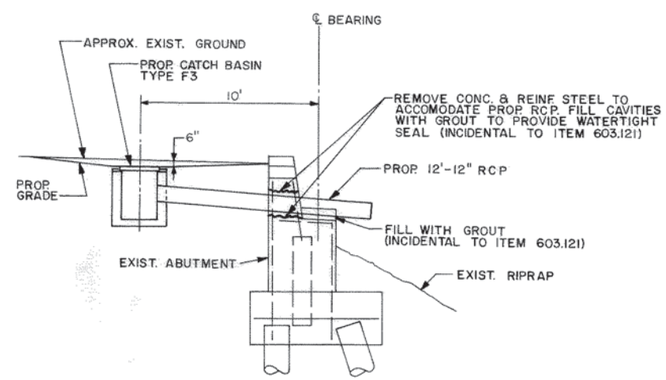

SECTION A-A
1/4" = 1'-0"

LEGEND

- PAVEMENT MILLING AND 1 1/2" BITUMINOUS PAVEMENT GRADE C OVERLAY.
- REMOVE AND RESET DOUBLE RAIL GUARDRAIL
- PROPOSED GUARDRAIL ATTACHMENT TYPE A (REMOVE AND STACK EXISTING GUARDRAIL)
- EXISTING SINGLE RAIL GUARDRAIL TO REMAIN.
- —SF— LINE OF TEMPORARY SILT FENCE AND HAY BALES

AS-BUILT

SHEET NUMBER: AB-09
54 OF 57

No.	Revision	By:	Date:

	By:	Date:
Designed	DJB	4/94
Drawn	CJW	4/94
Checked	RTH	4/94
In charge of:	RAL	

Maine Turnpike Authority
Maine Turnpike

BRIDGE DECK REPLACEMENT
ROYAL RIVER
SITE PLAN

HNTB — HOWARD NEEDLES TAMMEN & BERGENDOFF ARCHITECTS ENGINEERS PLANNERS

Contract 94.7

Sheet No. 12 of 76

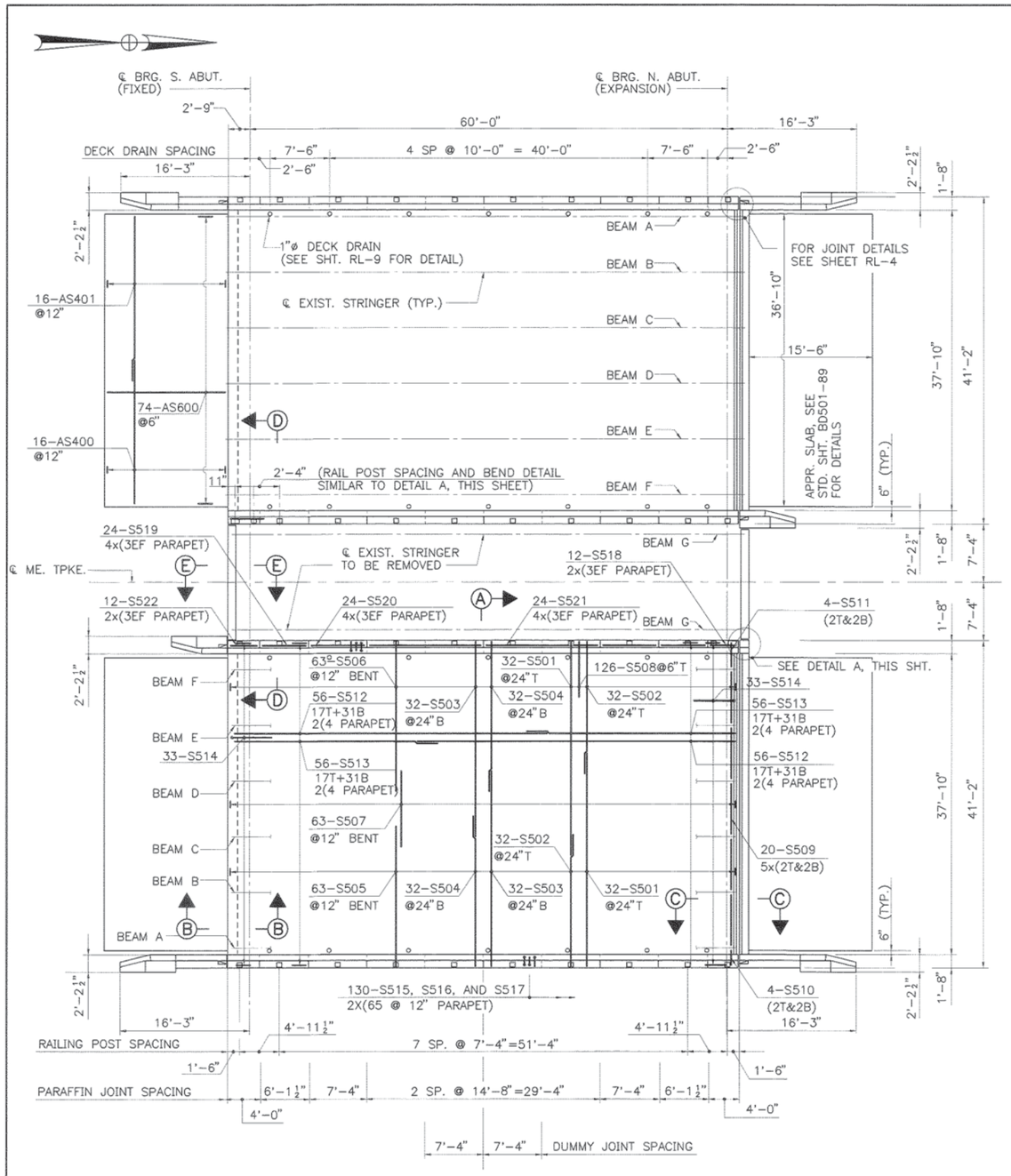

PLAN
$\frac{1}{8}$"=1'-0"

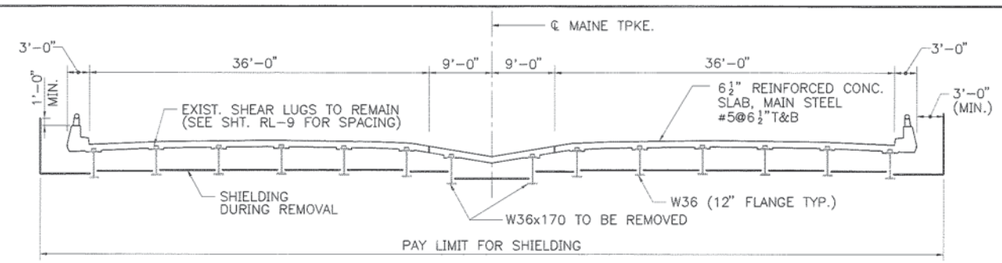

EXISTING DECK REMOVAL
(LOOKING NORTH)
N.T.S.

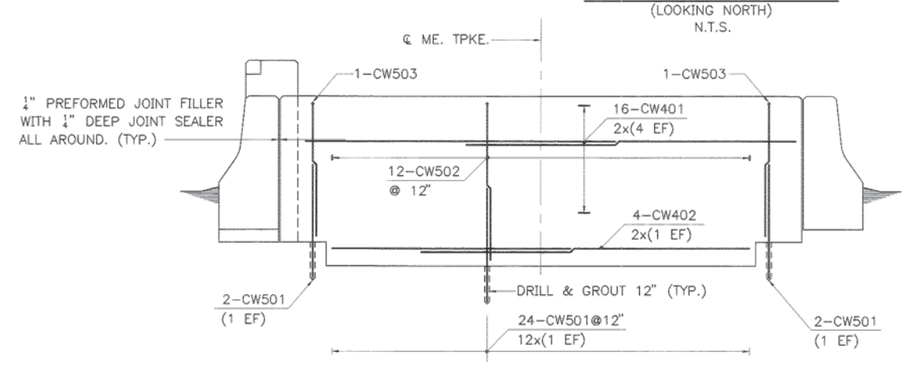

SECTION D-D
$\frac{1}{2}$"=1'-0"

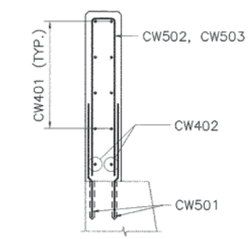

SECTION E-E
$\frac{1}{2}$"=1'-0"

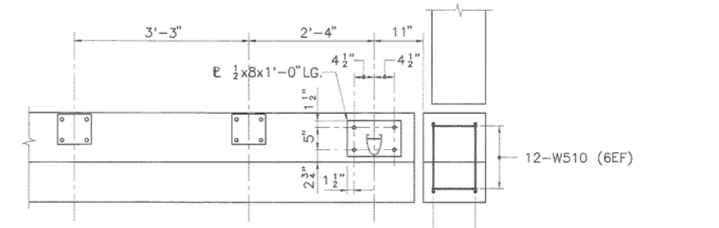

PLAN

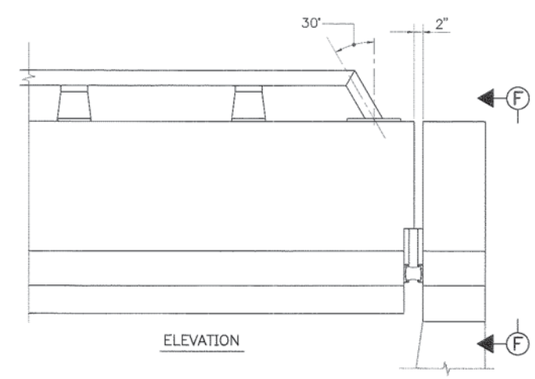

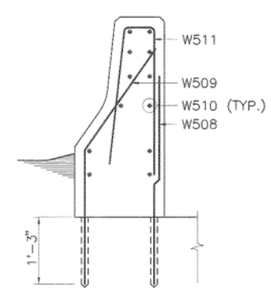

SECTION F-F

DETAIL A
$\frac{3}{4}$"=1'-0"

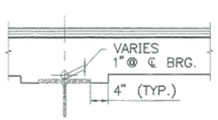

HAUNCH DETAIL
$\frac{3}{4}$"=1'-0"

AS-BUILT

SHEET NUMBER: AB-10
55 OF 57

NOTES
1. FOR GENERAL NOTES, SEE SHEET RL-1.
2. FOR SECTIONS A-A, B-B AND C-C SEE SHEET RL-3.

No.	Revision	By	Date
1	REISSUED	CFM	5/3/94

	By	Date
Designed	DMD	4/94
Drawn	RSJ	4/94
Checked	CFM	4/94
In Charge Of:	RAL	

Maine Turnpike Authority
Maine Turnpike

MAINE TURNPIKE OVER ROYAL RIVER DECK REINFORCING

HNTB
HOWARD NEEDLES TAMMEN & BERGENDOFF
ARCHITECTS ENGINEERS PLANNERS

Contract 94.7

Sheet No. RL-2
28 of 76

M:\B09009\GC\DWGS\SHT02 05/03/94 10:59

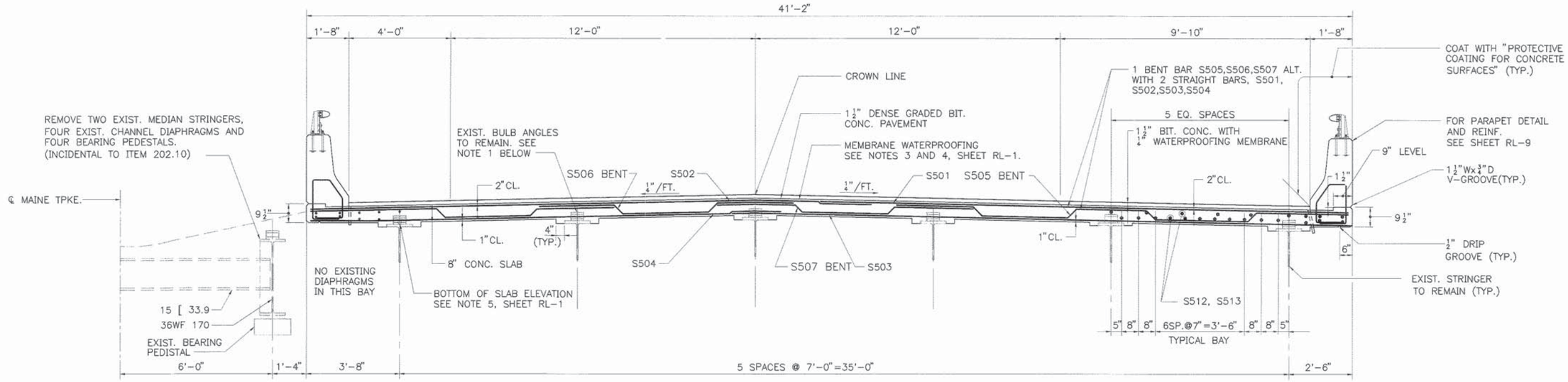

SECTION A-A
(LOOKING NORTH)
1/2"=1'-0"

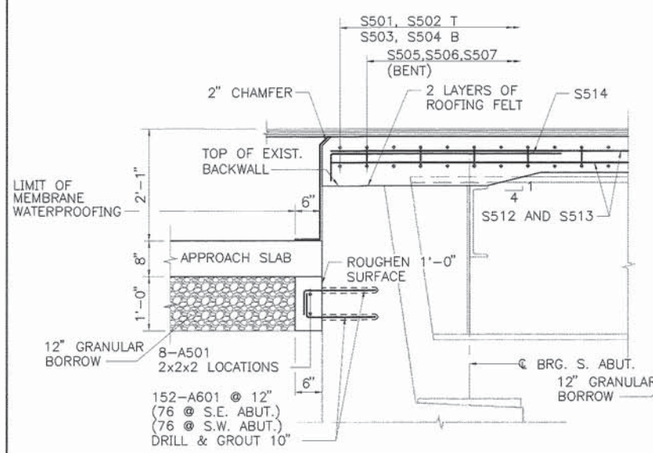

PROPOSED SECTION B-B
3/4"=1'-0"

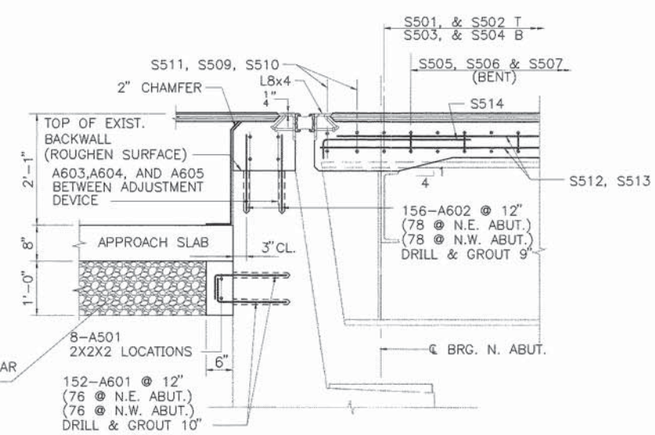

PROPOSED SECTION C-C
3/4"=1'-0"

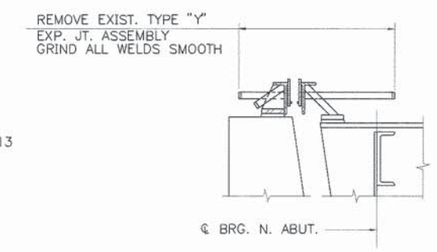

EXISTING SECTION C-C
3/4"=1'-0"

NOTE

1. EXISTING SHEAR CONNECTORS TO REMAIN. EACH SHEAR CONNECTOR REMOVED OR DAMAGED DURING DEMOLITION TO BE REPLACED WITH TWO-7/8"Φ, 5" STUD SHEAR CONNECTORS, AT CONTRACTORS EXPENSE.

AS-BUILT

SHEET NUMBER: AB-11
56 OF 57

No.	Revision	By	Date		By	Date
				Designed	DMD	4/94
				Drawn	KSP	4/94
1	REISSUED	CFM	5/3/94	Checked	CFM	4/94
				In Charge	RAL	

Maine Turnpike Authority
Maine Turnpike

MAINE TURNPIKE
OVER
ROYAL RIVER
TYPICAL DECK SECTION

HNTB
HOWARD NEEDLES TAMMEN & BERGENDOFF
ARCHITECTS ENGINEERS PLANNERS

Contract 94.7

Sheet No. RL-3
29 of 76

M:\B09009\GC\DWGS\SHT03 05/02/94 07:54

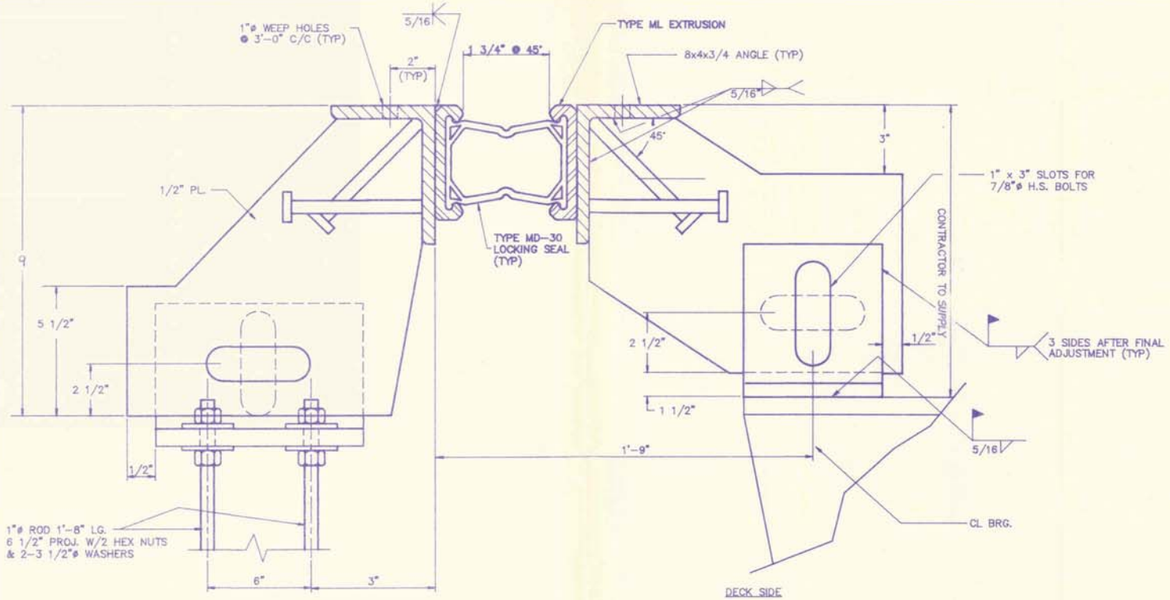

SECTION A-A

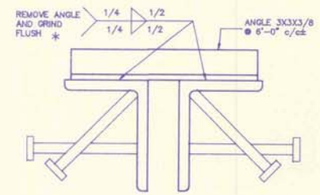

SHIPPING DETAIL

* REMOVE SHIPPING ANGLE AFTER INITIAL SET OF CONC. IN FINAL POUR.

** ML EXTRUSION NOT SHOWN FOR CLARITY

NOTES:

1. ALL METAL TO BE ASTM A588 EXCEPT TEMPORARY ERECTION DEVICE AND CLIP ANGLES.
2. EXPANSION BOLT ANCHORS TO CONFORM TO GSA SPECS. NO FF 325, GROUP 2, TYPE 4, CLASS 1.
3. 5/8"ø x 8" LG. CONCRETE ANCHORS TO BE NELSON SHEAR CONNECTORS ASTM A108.
4. ALL WELDS IN CONTACT WITH ELASTOMERIC SEAL SHALL BE GROUND SMOOTH.
5. ELASTOMERIC SEAL & LUBRICANT ADHESIVE WILL BE MANUFACTURED BY STRUCTURAL ACCESSORIES INC., TERRYVILLE, CT.
6. SEAL SHALL BE INSTALLED IN ONE CONTINUOUS PIECE FOR THE ENTIRE LENGTH OF JOINT, IN FIELD AFTER ALL STAGES OF CONSTRUCTION ARE COMPLETE & BEFORE BRIDGE IS OPEN TO TRAFFIC.
7. FOR PAYMENT PURPOSE, THE LENGTH OF JOINT PAID FOR WILL BE THE NUMBER OF LINEAR FEET OF JOINT SYSTEM COMPLETELY INSTALLED, MEASURED HORIZONTALLY & VERTICALLY ALONG THE CENTERLINE OF SYSTEM BETWEEN THE OUTER LIMITS OF THE BRIDGE FASCIA UNLESS OTHERWISE SHOWN ON PLANS.
8. CONTRACTOR TO VERIFY ALL DIMENSIONS OF JOINT SYSTEM PRIOR TO FABRICATION TO INSURE PROPER FIT IN THE FIELD.
9. INSPECTION BY ENGINEER IN FIELD.
10. METAL SURFACES IN DIRECT CONTACT WITH SEAL SHALL BE SANDBLASTED PRIOR TO INSTALLATION.
11. S.A.I. WILL NOT BE RESPONSIBLE FOR ANY FIELDWORK/BACKCHARGES/SHORTAGE WITHOUT WRITTEN AUTHORIZATION PRIOR TO START OF WORK.

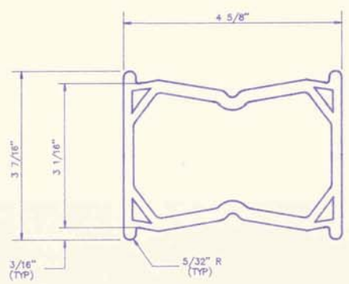

MD-30 BOX SEAL
N.T.S.

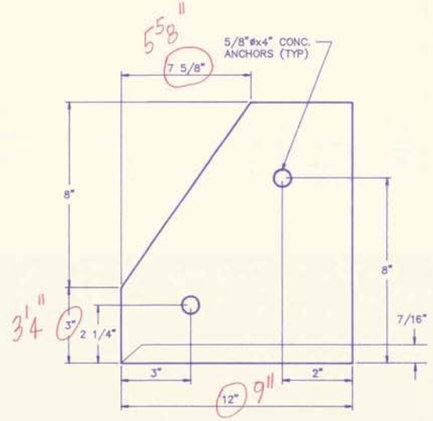

CURB PLATE DETAIL
N.T.S.

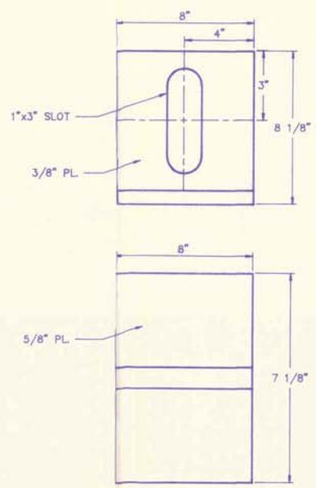

TEE DETAIL (DECK.)
N.T.S.

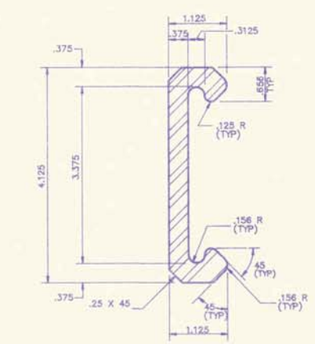

ML-EXTRUSION DETAIL
N.T.S.

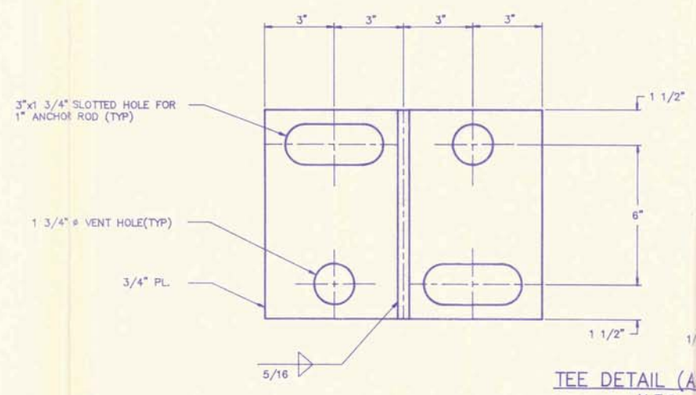

TEE DETAIL (ABUT.)
N.T.S.

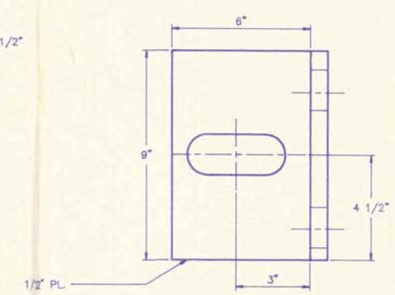

SHOP DRAWING REVIEW
HOWARD, NEEDLES, TAMMEN, & BERGENDOFF

Review is for general compliance with contract data only. Sole responsibility for correctness of dimensions, details, quantities and safety during fabrication and erection shall remain with the Contractor.

☐ No Exceptions Taken
☑ Make Corrections Noted
☐ Amend and Resubmit
☐ Rejected – See Remarks

By AD Date 7/15/94

AS-BUILT

SHEET NUMBER: AB-12
57 OF 57

520.2-008A

S. A. I. STRUCTURAL ACCESSORIES INC.
S. MAIN STREET, P.O. BOX 10, TERRYVILLE, CT. 06786
(203) 589-8826

MAINE TURNPIKE AUTHORITY

TITLE: DECK JOINT SECTIONS AND TYPICAL DETAILS, GENERAL NOTES.

STRUCT. NO.		JOB NO.	ME-45
ITEM:		QTY.:	
FOR:	CALLAHAN BROTHERS		
JOB:			
CONTRACT NO.	MTA# 94.7		
LOCATION:	MAINE TURNPIKE OVER ROYAL RIVER		
DRAWN BY: MJC	DATE: 7/7/94	DWG. NO. ME45-15	SHEET NO. 3 OF 3
CHK'D BY: RJC	DATE: 7/7/94	REP. N.T.S.	